2026 MURANO

OWNER'S MANUAL
and MAINTENANCE INFORMATION

For your safety, read carefully and keep in this vehicle.

CALIFORNIA PROPOSITION 65 WARNING

⚠WARNING

Operating, servicing and maintaining a passenger vehicle or off-highway motor vehicle can expose you to chemicals including engine exhaust, carbon monoxide, phthalates, and lead, which are known to the State of California to cause cancer and birth defects or other reproductive harm. To minimize exposure, avoid breathing exhaust, do not idle the engine except as necessary, service your vehicle in a well-ventilated area and wear gloves or wash your hands frequently when servicing your vehicle. For more information go to www.P65Warnings.ca.gov/passenger-vehicle.

This manual was prepared to help you understand the operation and maintenance of your vehicle so that you may enjoy many miles (kilometers) of driving pleasure. Please read through this manual before operating your vehicle.

A separate Warranty Information Booklet explains details about the warranties covering your vehicle. The "Maintenance and schedules" section of this manual explains details about maintaining and servicing your vehicle.

Additionally, a separate Customer Care/ Lemon Law Booklet (U.S. only) will explain how to resolve any concerns you may have with your vehicle, and clarify your rights under your state's lemon law.

In addition to factory-installed options, your vehicle may also be equipped with additional accessories installed prior to delivery. It is recommended that you visit a NISSAN dealer for details concerning the particular accessories with which your vehicle is equipped. It is important that you familiarize yourself with all disclosures, warnings, cautions and instructions concerning proper use of such accessories prior to operating the vehicle and/or accessory. It is recommended that you visit a NISSAN dealer for details concerning the particular accessories with which your vehicle is equipped.

A NISSAN dealership knows your vehicle best. When you require any service or have any questions, they will be glad to assist you with the extensive resources available to them.

READ FIRST—THEN DRIVE SAFELY

Before driving your vehicle, please read this Owner's Manual carefully. This will ensure familiarity with controls and maintenance requirements, assisting you in the safe operation of your vehicle.

⚠ WARNING

IMPORTANT SAFETY INFORMATION REMINDERS!

Follow these important driving rules to help ensure a safe and comfortable trip for you and your passengers!

- **NEVER drive under the influence of alcohol or drugs.**
- **ALWAYS observe posted speed limits and never drive too fast for conditions.**
- **ALWAYS give your full attention to driving and avoid using vehicle features or taking other actions that could distract you.**
- **ALWAYS use your seat belts and appropriate child restraint systems. Pre-teen children should be seated in the rear seat.**
- **ALWAYS provide information about the proper use of vehicle safety features to all occupants of the vehicle.**

- **ALWAYS review this Owner's Manual for important safety information.**

For descriptions specified for all-wheel drive models, an **AWD** mark is placed at the beginning of the applicable sections/ items.

As with other vehicles with features for off- road use, failure to operate all-wheel drive models correctly may result in loss of control or an accident. For additional information, see "Driving safety precautions" (P. 277).

ON-PAVEMENT AND OFF-ROAD DRIVING

⚠ WARNING

This vehicle will handle and maneuver differently from an ordinary passenger car because it has a higher center of gravity for off-road use. As with other vehicles with features of this type, failure to operate this vehicle correctly may result in loss of control or an accident.

For additional information, see "On-pavement and off-road driving precautions" (P. 275), "Avoiding collision and roll-over" (P. 275) and "Driving safety precautions" (P. 277).

MODIFICATION OF YOUR VEHICLE

⚠ WARNING

This vehicle should not be modified. Modification could affect its performance, safety, emissions or durability and may even violate governmental regulations. In addition, damage or performance problems resulting from modifications may not be covered under NISSAN warranties.

⚠ WARNING

Installing an aftermarket On-Board Diagnostic (OBD) plug-in device that uses the port during normal driving, for example remote insurance company monitoring, remote vehicle diagnostics, telematics or engine reprogramming, may cause interference or damage to vehicle systems. We do not recommend or endorse the use of any aftermarket OBD plug-in devices, unless specifically approved by NISSAN. The vehicle warranty may not cover damage caused by any aftermarket plug-in device.

WHEN READING THE MANUAL

This manual includes information for all features and equipment available on this model. Features and equipment in your vehicle may vary depending on model, trim level, options selected, order, date of production, region or availability. Therefore, you may find information about features or equipment that are not included or installed on your vehicle.

All information, specifications and illustrations in this manual are those in effect at the time of printing. NISSAN reserves the right to change specifications, performance, design or component suppliers without notice and without obligation. From time to time, NISSAN may update or revise this manual to provide Owners with the most accurate information currently available. Please carefully read and retain with this manual all revision updates sent to you by NISSAN to ensure you have access to accurate and up-to-date information regarding your vehicle. Current versions of vehicle Owner's Manuals and any updates can also be found in the Owner section of the NISSAN website at **https://owners.nissanusa.com/nowners/navigation/manualsGuide**. If you have questions concerning any information in your Owner's Manual, contact NISSAN Consumer Affairs. For contact information, refer to the NISSAN CUSTOMER CARE PROGRAM page in this Owner's Manual.

IMPORTANT INFORMATION ABOUT THIS MANUAL

You will see various symbols in this manual. They are used in the following ways:

⚠WARNING

This is used to indicate the presence of a hazard that could cause death or serious personal injury. To avoid or reduce the risk, the procedures must be followed precisely.

⚠CAUTION

This is used to indicate the presence of a hazard that could cause minor or moderate personal injury or damage to your vehicle. To avoid or reduce the risk, the procedures must be followed carefully.

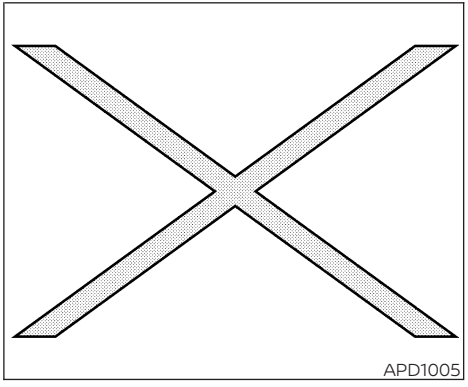

If you see this symbol, it means **"Do not do this"** or **"Do not let this happen."**

If you see a symbol similar to these in an illustration, it means the arrow points to the front of the vehicle.

Arrows in an illustration that are similar to these indicate movement or action.

Arrows in an illustration that are similar to these call attention to an item in the illustration.

CALIFORNIA PERCHLORATE ADVISORY

Some vehicle parts, such as lithium batteries, may contain perchlorate material. The following advisory is provided: "Perchlorate Material – special handling may apply. For additional information, refer to www.dtsc.ca.gov/hazardouswaste/perchlorate/".

QR CODE

The word "QR code" is registered trademark of DENSO WAVE INCORPORATED in Japan and other countries.

COPYRIGHT

© 2025 NISSAN NORTH AMERICA, INC.

All rights reserved. No part of this Owner's Manual may be reproduced or stored in a retrieval system, or transmitted in any form, or by any means, electronic, mechanical, photocopying, recording or otherwise, without the prior written permission of Nissan North America, Inc.

NISSAN CUSTOMER CARE PROGRAM

NISSAN CARES . . .

Both NISSAN and your NISSAN dealer are dedicated to serving all your automotive needs. Your satisfaction with your vehicle and your NISSAN dealer are our primary concerns. Your NISSAN dealer is always available to assist you with all your automobile sales and service needs.

However, if there is something that your NISSAN dealer cannot assist you with or you would like to provide NISSAN directly with comments or questions, please contact the NISSAN Consumer Affairs Department using our toll-free number:

For U.S. customers
1-800-NISSAN-1
(1-800-647-7261)

For Canadian customers
1-800-387-0122

The Consumer Affairs Department will ask for the following information:

- Your name, address, and telephone number
- Vehicle identification number (attached to the top of the instrument panel on the driver's side)
- Date of purchase
- Current odometer reading
- Your NISSAN dealer's name
- Your comments or questions

OR

You can write to NISSAN with the information at:

For U.S. customers
Nissan North America, Inc.
Consumer Affairs Department
P.O. Box 685003
Franklin, TN 37068-5003
or via e-mail at:
nnaconsumeraffairs@nissan-usa.com

For Canadian customers
Nissan Canada Inc.
5290 Orbitor Drive
Mississauga, Ontario L4W 4Z5
or via e-mail at:
information.centre@nissancanada.com

If you prefer, visit us at:
www.nissanusa.com (for U.S. customers)
or
www.nissan.ca (for Canadian customers)

We appreciate your interest in NISSAN and thank you for buying a quality NISSAN vehicle.

NISSAN SOFTWARE LICENSE

- Your vehicle includes physical parts and/or physical components of such parts on which software and/or firmware ("Software") is embedded or installed. Additionally, updates to Software may be made available by NISSAN for download and installation by owners from time to time as determined by NISSAN in its sole discretion. Such Software, and all updates thereto, including updates delivered by NISSAN to your vehicle over the air (collectively "Updates"), are licensed, and not sold, to you. A portion of the Software may contain or consist of open source software, which may be used under the terms and conditions of the specific license under which the open source software is distributed. For other Software, including Software for which there is no separate license agreement between you and the manufacturer or owner of the Software, the terms and conditions governing your right to use and the use of the installed Software, including any Updates, applications, services, and content provided for or through the Software, are set forth in the End User License Agreement found at:

  For U.S. customers — https://www.nissanusa.com/owners/ownership

  For Canadian customers — https://www.nissan.ca/owners/owner-support.html

  Your use of the Software, including any Updates, constitutes consent to the End User License Agreement's terms and conditions.
- PLEASE NOTE: The End User License Agreement contains an arbitration clause. You may opt out of this arbitration clause within 30 days of the date of your vehicle purchase by sending a signed, written notice to NISSAN at the following address:

  For U.S. customers
  Nissan North America, Inc.
  Consumer Affairs Department
  P.O. Box 685003
  Franklin, TN 37068-5003

  For Canadian customers
  Nissan Canada Inc.
  Consumer Affairs Department
  5290 Orbitor Drive
  Mississauga, Ontario L4W 4Z5
- Please refer to "Updating system software" in the 5. Information section or "Software Update" in the 2. Getting Started section of the NissanConnect® Owner's Manual for information about installing Over-the-Air Updates. For questions or assistance concerning installation of any over-the-air Update, you may contact NISSAN Owner Services at 1-800-333-0207 for U.S. customers, or for Canadian customers NISSAN Consumer Affairs at consumeraffairs@nissancanada.com. You may also choose to visit a NISSAN dealer for assistance - charges may apply.

Table of contents

Illustrated table of contents	0
Safety - Seats, seat belts and supplemental restraint system	1
Instruments and controls	2
Pre-driving checks and adjustments	3
Monitor, climate, audio, phone and voice recognition systems	4
Starting and driving	5
In case of emergency	6
Appearance and care	7
Do-it-yourself	8
Maintenance and schedules	9
Technical and consumer information	10
Index	11

0 Illustrated table of contents

Air bags, seat belts and child restraints 2
Exterior front 3
Exterior rear 5
Passenger compartment 6
Instrument panel 7
Engine compartment check locations 9
Warning and indicator lights 10

AIR BAGS, SEAT BELTS AND CHILD RESTRAINTS

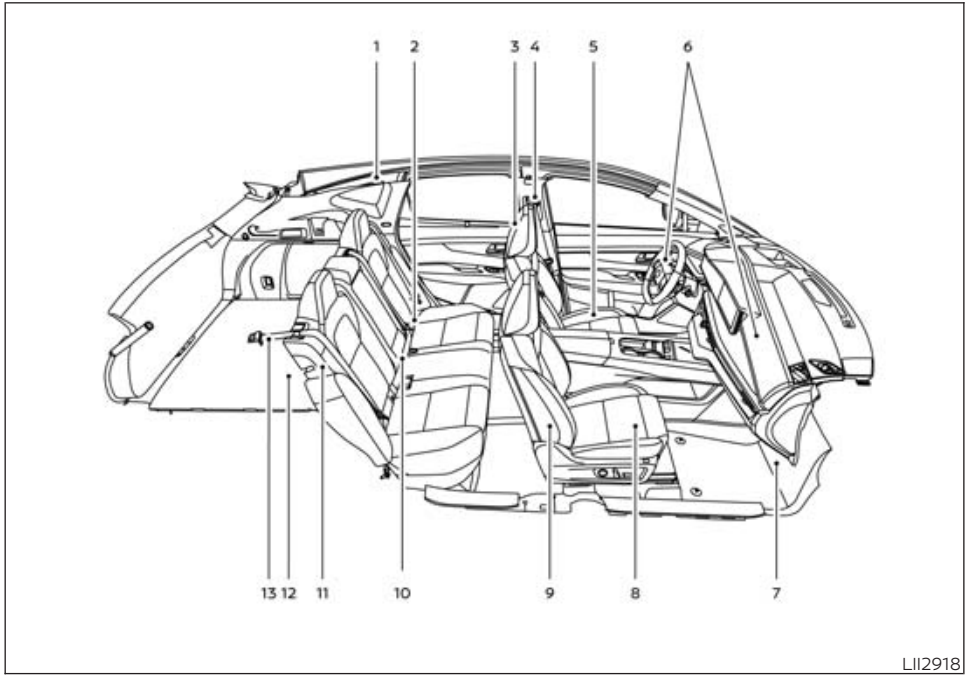

1. Roof-mounted curtain side-impact and rollover supplemental air bag (P. 69)
2. LATCH (Lower Anchors and Tethers for CHildren) system (P. 34)
3. Head restraints/headrests (P. 17)
4. Front seat belt with pretensioner(s) and shoulder height adjuster (P. 21, 73, 27)
5. Front seats (P. 12)
6. Supplemental front-impact air bags (P. 53)
7. Driver and front passenger supplemental knee air bag (passenger's side shown; driver's side similar) (P. 71)
8. Occupant classification sensor (weight sensor) (P. 74)
9. Front seat-mounted side-impact supplemental air bag (P. 69)
10. Folding rear bench seat (P. 16)
11. Rear outboard seat-mounted side-impact supplemental air bag (P. 69)
12. Rear outboard seat top tether strap anchor (located on bottom of seat-back) (P. 37)
13. Seat belt with pretensioner(s) (rear outboard seats) (passenger's side shown; driver's side similar) (P. 73)

Refer to the page number indicated in parentheses for operating details.

EXTERIOR FRONT

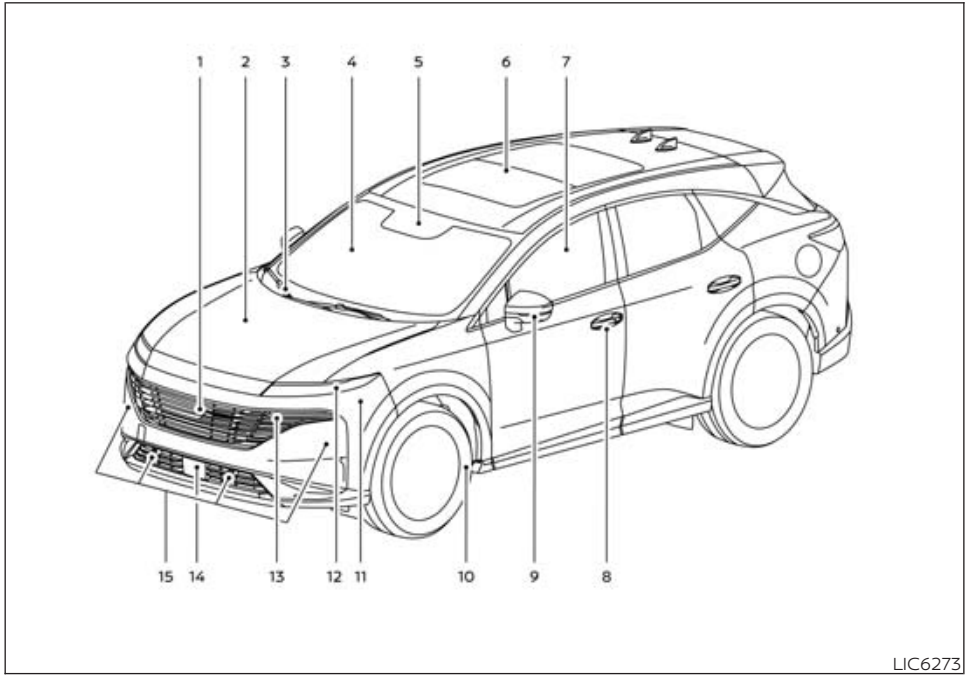

1. Front view camera (if so equipped) (P. 233)
2. Engine hood (P. 200)
3. Wiper and washer switch (P. 132)
4. Windshield (P. 501)
5. Multi-sensing front camera (P. 301) (P. 304) (P. 344).
6. Power moonroof (if so equipped) (P. 171)
7. Power windows (P. 167)
8. Door locks (P. 185)

   NISSAN Intelligent Key® system (P. 187)

   Keys (P. 183)
9. Mirrors (P. 214)

   Side view camera (if so equipped) (P. 233)
10. Tire pressure (P. 511)

    Emergency tire puncture repair kit (if so equipped) (P. 466)

    Flat tire (if so equipped) (P. 457)

    Tire chains (P. 520)
11. Radar sensor (if so equipped) (P. 344)
12. Replacing bulbs (P. 510)

    Headlight switch (P. 136)

    LED Daytime Running Lights (DRL) system (P. 141)
13. Turn signal switch (P. 136)

    Front Decorative Light (P. 141)

14. Front radar sensor (P. 344)
15. Front sonar sensors (P. 439)

    ProPILOT Assist Systems (P. 344)

Refer to the page number indicated in parentheses for operating details.

EXTERIOR REAR

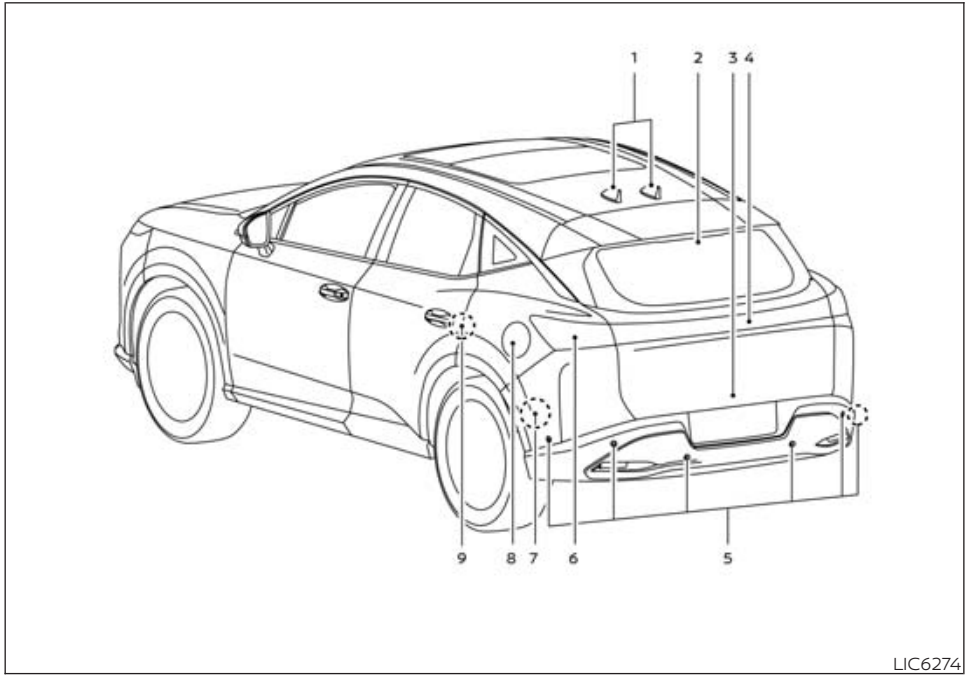

1. Antenna (For ProPILOT Assist 2.1 models, there are two antennas on the roof. For ProPILOT Assist 1.1 models, there is one antenna.) (P. 262)
2. Rear wiper and washer switch (P. 134)
3. Rearview camera (P. 225, 233)
4. Liftgate release (P. 206)
5. Rear sonar sensors (P. 439)
6. Replacing bulbs (P. 510)
7. Radar Sensors (P. 344)
8. Fuel-filler door (P. 208)
   Fuel recommendation (P. 558)
9. Child safety rear door lock (P. 187)

Refer to the page number indicated in parentheses for operating details.

PASSENGER COMPARTMENT

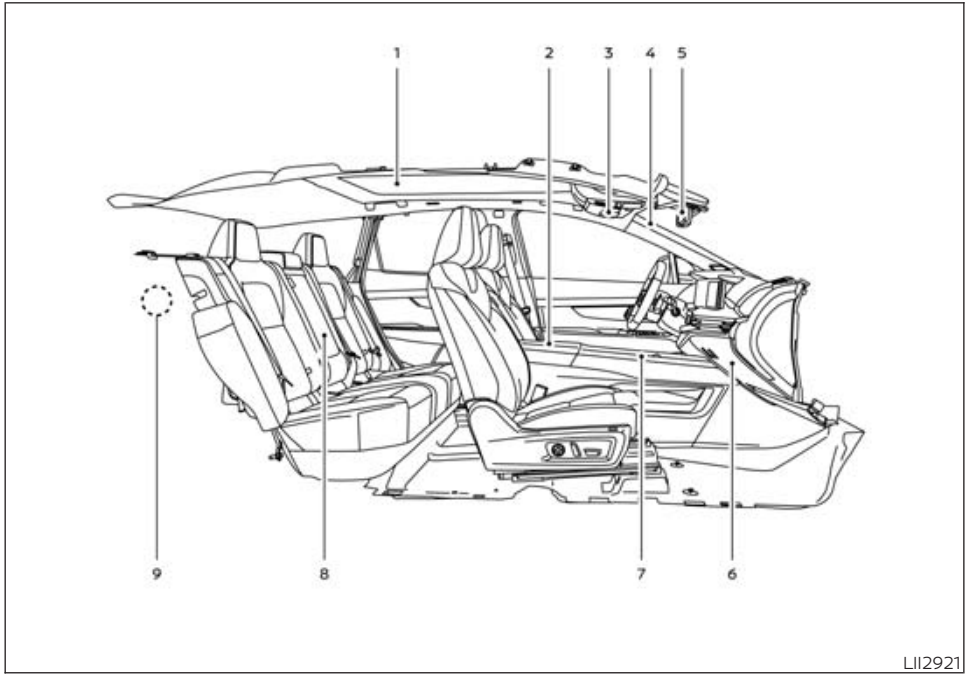

1. Power moonroof (if so equipped) (P. 171)
2. Console box (P. 162)
3. Map lights (P. 175)
4. Sun visors (P. 212)
5. Rearview mirror (P. 214)

   Front passenger air bag status light (P. 64)
6. Glove box (P. 162)
7. Cup holders (P. 163)
8. Center armrest (P. 15)
9. Luggage hooks (P. 165)

   Emergency tire puncture repair kit (if so equipped) (P. 466)

Refer to the page number indicated in parentheses for operating details.

INSTRUMENT PANEL

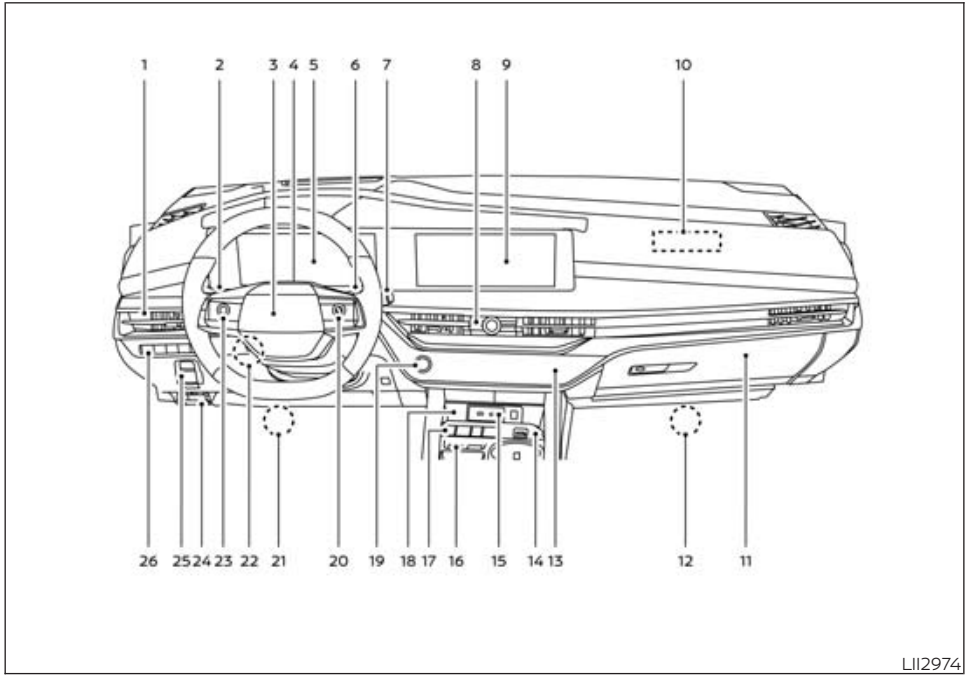

1. Vent (P. 254)
2. Headlight/turn signal switch (P. 136)
3. Supplemental air bag (P. 69)
   Horn (P. 142)
4. Driver monitor camera (if so equipped) (P. 383)
5. Meters and gauges (P. 82)
   Warning and indicator lights (P. 86)
   Vehicle information display (P. 97)
6. Paddle shifter (P. 290)
7. Wiper and washer switch (P. 132)
   Rear window wiper and washer switch (P. 134)
8. Hazard warning flasher switch (P. 456)
   Audio system/Center display controls*
9. Center display*
   Navigation display (if so equipped)*
10. Front passenger supplemental air bag (P. 69)
11. Glove box (P. 162)
12. Front passenger supplemental knee air bag (P. 71)
13. Heater and air conditioning controls (P. 255)
14. Drive Mode Selector (P. 297)
15. USB ports*

16. Idling Stop OFF switch (P. 451)
17. Shift switches (P. 286)
18. Magnetic Wireless charger (P. 157)
19. Push-button ignition switch (P. 279)
20. Bluetooth® Hands-Free Phone System/ Audio control switches*

    Control panel and vehicle information display switches (P. 97)
21. Driver supplemental knee air bag (P. 71)
22. Tilt and telescopic steering wheel control (P. 211)
23. ProPILOT Assist switches (P. 344)

    Volume control switches*
24. Hood release (P. 200)
25. Electronic parking brake (P. 292)

    Automatic brake hold switch (P. 294)
26. Steering Assist switch (P. 147)

    Head Up Display (HUD) switch (if so equipped) (P. 148)

    Heated steering wheel switch (if so equipped) (P. 146)

    Liftgate instrument panel switch (P. 201)

*: Refer to the separate NissanConnect® Owner's Manual.

Refer to the page number indicated in parentheses for operating details.

ENGINE COMPARTMENT CHECK LOCATIONS

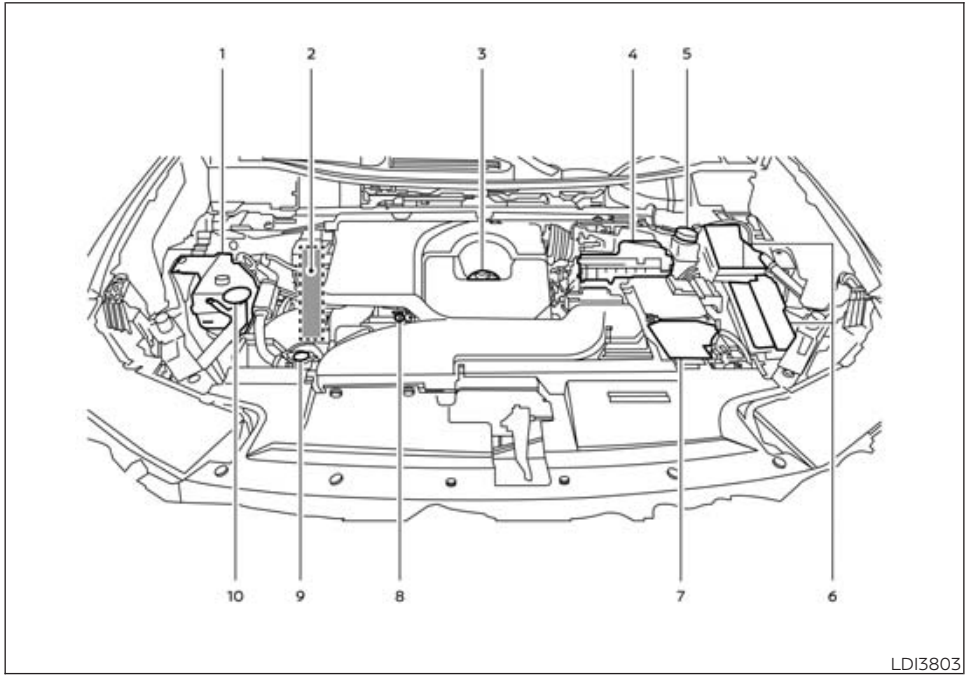

2.0L 4 cylinder (KR20DDET engine model)

1. Engine coolant reservoir (P. 488)
2. Drive belt location (P. 499)
3. Engine oil filler cap (P. 490)
4. Air cleaner (P. 500)
5. Brake fluid reservoir (P. 494)
6. Fuse/Fusible link box (P. 504)
7. Battery (P. 496)
8. Engine oil dipstick (P. 490)
9. Radiator cap (P. 488)
10. Windshield-washer fluid reservoir (P. 495)

NOTE:

Your vehicle may not be equipped with an engine cover.

Refer to the page number indicated in parentheses for operating details.

WARNING AND INDICATOR LIGHTS

Warning/Indicator light (red)

- BRAKE
  or
  Brake warning light (P. 87)
- Charge warning light (P. 88)
- Electric power steering warning light (red) (P. 88)
- Electric shift control system warning light (P. 88)
- PARK
  or
  Electronic parking brake indicator light (P. 88)
- Engine oil pressure warning light (P. 89)
- Master warning light (P. 89)
- Seat belt warning light and chime (P. 89)
- Steering Assist Hands Off warning light (P. 90)
- Supplemental air bag warning light (P. 90)

Warning/Indicator light (yellow)

- ABS
  or
  Anti-lock Braking System (ABS) warning light (P. 90)
- Automatic Emergency Braking (AEB) with Pedestrian Detection system warning light (P. 91)
- Electric power steering warning light (yellow) (P. 91)
- Electronic parking brake warning light (P. 91)
- Front passenger air bag status light (P. 92)
- Low tire pressure warning light (P. 92)
- Malfunction Indicator Light (MIL) (P. 94)
- Master warning light (P. 94)
- Rear Automatic Braking (RAB) system warning light (P. 94)
- Slip indicator light (P. 95)
- Vehicle Dynamic Control (VDC) OFF indicator light (P. 95)

Warning/Indicator light (other)

- Automatic brake hold indicator light (white/green) (P. 95)
- High Beam Assist indicator light (green) (P. 96)
- High beam indicator light (blue) (P. 96)
- Low beam indicator light (green) (P. 96)
- Side light and headlight indicator light (green) (P. 96)
- Turn signal/hazard indicator lights (green) (P. 96)

1 Safety - Seats, seat belts and supplemental restraint system

Seats . . . 12
Basic Information . . . 12
Front power seat adjustment . . . 13
Armrest . . . 15
Flexible seating . . . 15
Head restraints/headrests . . . 17
Basic Information . . . 17
Adjustable head restraint/headrest components . . . 18
Non-adjustable head restraint/headrest components . . . 18
Remove . . . 18
Install . . . 19
Adjust . . . 19
Seat belts . . . 21
Precautions on seat belt usage . . . 21
Seat belt warning light and chime . . . 24
Pregnant women . . . 24
Injured persons . . . 24
Three-point type seat belt with retractor . . . 24
Seat belt extenders . . . 28
Seat belt maintenance . . . 29
Child safety . . . 29
Basic Information . . . 29
Infants . . . 30
Small children . . . 30
Larger children . . . 30
Child restraints . . . 32
Precautions on child restraints . . . 32
LATCH (Lower Anchors and Tethers for CHildren) system . . . 34
Rear-facing child restraint installation using LATCH . . . 38
Rear-facing child restraint installation using the seat belts . . . 40
Forward-facing child restraint installation using LATCH . . . 42
Forward-facing child restraint installation using the seat belts . . . 45
Installing top tether strap . . . 48
Booster seats . . . 49
Supplemental Restraint System (SRS) . . . 53
Precautions on SRS . . . 53
Supplemental air bag warning labels . . . 74
Supplemental air bag warning light . . . 74

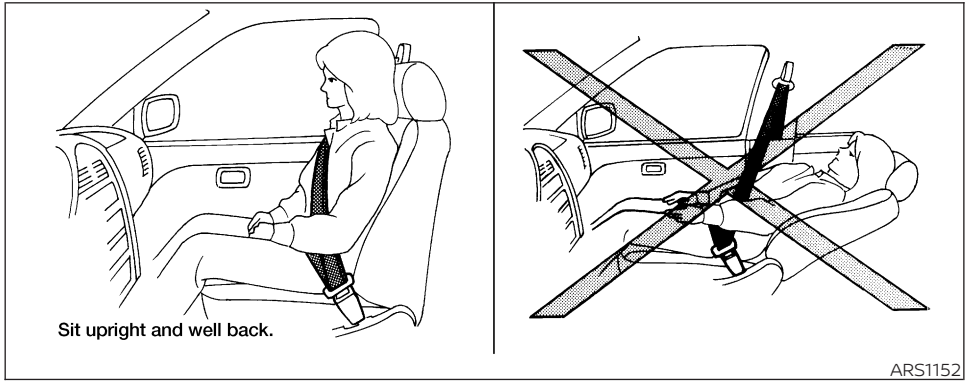

BASIC INFORMATION

⚠ WARNING

- **Do not ride in a moving vehicle when the seatback is reclined. This can be dangerous. The shoulder belt will not be against your body. In an accident, you could be thrown into it and receive neck or other serious injuries. You could also slide under the lap belt and receive serious internal injuries.**
- **For the most effective protection when the vehicle is in motion, the seat should be upright. Always sit well back and upright in the seat with both feet on the floor and adjust the seat properly. For additional information, see "Precautions on seat belt usage" (P. 21).**
- **Do not leave children unattended inside the vehicle. They could unknowingly activate switches or controls or make the vehicle move. Unattended children could become involved in serious accidents.**
- **To help avoid risk of injury or death through unintended operation of the vehicle and/or its systems, do not leave children, people who require the assistance of others or pets unattended in your vehicle. Additionally, the temperature inside a closed vehicle on a warm day can quickly become high enough to cause a significant risk of injury or death to people and pets.**
- **Do not adjust the driver's seat while driving so full attention may be given to vehicle operation. The seat may move suddenly and could cause loss of control of the vehicle.**
- **The seatback should not be reclined any more than needed for comfort. Seat belts are most effective when the passenger sits well back and straight up in the seat. If the seatback is reclined, the risk of sliding under the lap belt and being injured is increased.**

⚠ CAUTION

When adjusting the seat positions, be sure not to contact any moving parts to avoid possible injuries and/or damage.

FRONT POWER SEAT ADJUSTMENT

Operating tips

- The power seat motor has an auto-reset overload protection circuit. If the motor stops during operation, wait 30 seconds then reactivate the switch.
- Do not operate the power seat switch for a long period of time when the engine is off. This will discharge the battery.

For additional information, see "Memory seat" (P. 218).

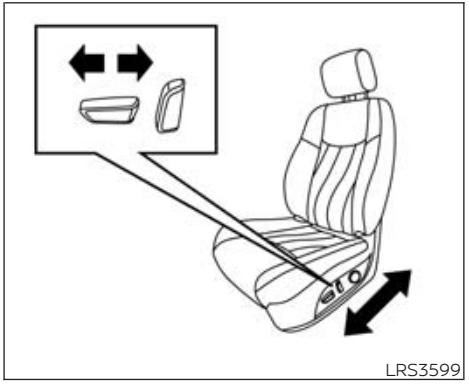

Forward and backward

Moving the switch as shown will slide the seat forward or backward to the desired position.

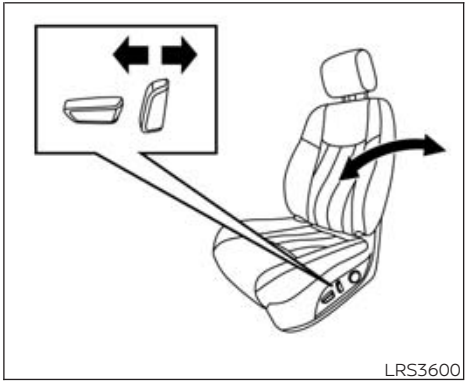

Reclining

Move the recline switch as shown until the desired angle is obtained.

The reclining feature allows adjustment of the seatback for occupants of different sizes for added comfort and to help obtain proper seat belt fit. For additional information, see "Precautions on seat belt usage" (P. 21). Also, the seatback can be reclined to allow occupants to rest when the vehicle is parked.

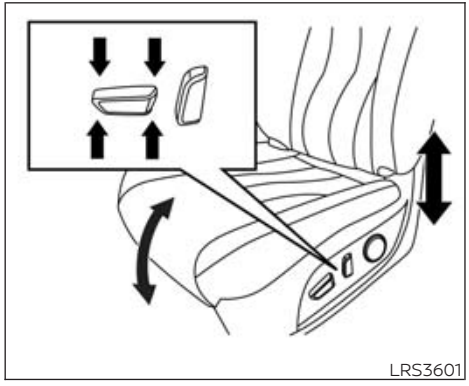

Driver's and passenger's seat (if so equipped)

Seat lifter and tilt

- Move the back part of the switch as shown to adjust the height of the seat.
- Move the front part of the switch as shown to adjust the angle of the seat cushion (if so equipped).

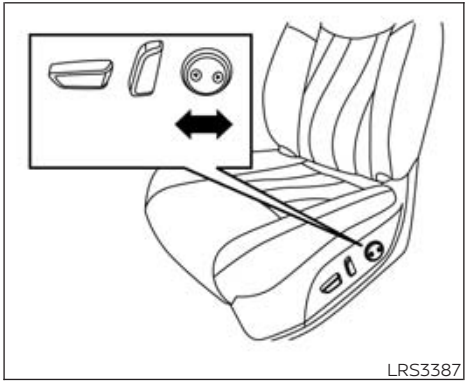

Driver's and front passenger seat (if so equipped)

Lumbar support

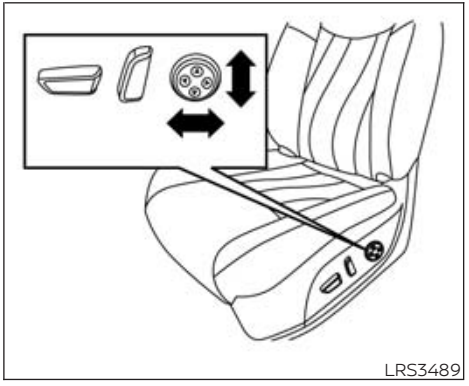

Driver's and front passenger seat (if so equipped)

Move the switch forward to increase the lumbar support or rearward to decrease the lumbar support.

Move the switch up or down to adjust the height of the lumbar.

NOTE:

Moving the switch forward increases the lumbar support on the last height activated position.

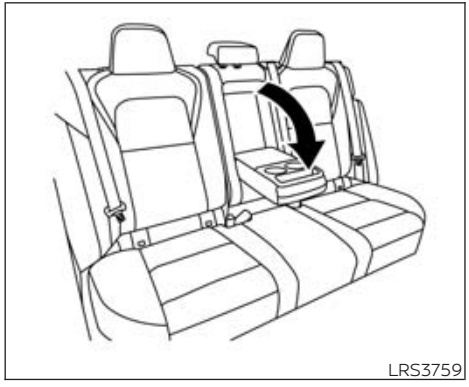

ARMREST

To lower the armrest, pull the armrest down as shown.

To return the armrest to the up position, push up on the armrest until it is in the full up position.

FLEXIBLE SEATING

Basic Information

WARNING

- **Never allow anyone to ride in the cargo area or on the rear seats when they are in the fold-down position. In a collision, people riding in these areas without proper restraints are more likely to be seriously injured or killed.**
- **Do not allow people to ride in any area of your vehicle that is not equipped with seats and seat belts. Be sure everyone in your vehicle is in a seat and using a seat belt properly.**
- **Do not allow more than one person to use the same seat belt.**
- **Do not fold down the rear seats when occupants are in the rear seat area or any luggage is on the rear seats.**
  - **Make sure that the seat path is clear before moving the seat.**
  - **Be careful not to allow hands or feet to get caught or pinched in the seat.**
- **Head restraints/headrests should be adjusted properly as they may provide significant protection against injury in an accident. Always replace and adjust them properly if they have been removed for any reason.**
- **If the head restraints/headrests are removed for any reason, they should be securely stored to prevent them from causing injury to passengers or damage to the vehicle in case of sudden braking or an accident.**
- **When returning rear row seatbacks to the upright position, the operator should always verify that the back is locked in the upright position by gently rocking the seatback before allowing passengers to occupy the rear seats. If they are not completely secured, passengers may be injured in an accident or sudden stop.**
- **Properly secure all cargo to help prevent it from sliding or shifting. Do not place cargo higher than the seatbacks. In a sudden stop or collision, unsecured cargo could cause personal injury.**

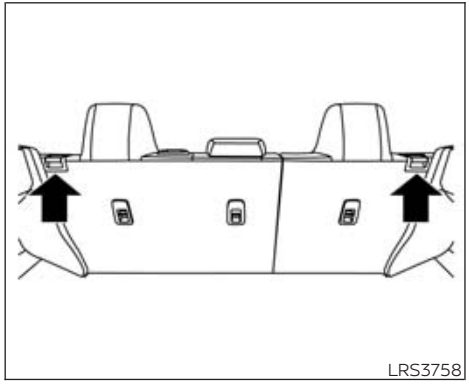

Rear seat

Folding the rear bench seat

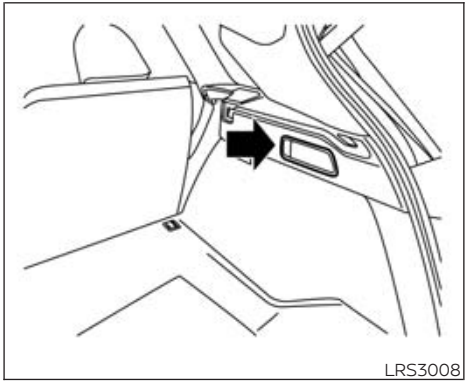

Cargo area

To fold the rear bench seat flat for maximum cargo hauling:

1. Remove any object from the rear seat sitting area
2. Stow the rear seat belts in the seat belt hooks found on the sides of the vehicle. For additional information, see "Seat belt hook" (P. 28).
3. Pull up on the latch located on the outside corner of each seatback or pull the lever on either side of the cargo area.

NOTE:
When using the cargo lever, make sure to pull and hold the lever open until the seat is completely folded to avoid causing the seatbelt to lock.

4. To return the rear bench seats to a seating position, push up on the seatback until it latches in place.

NOTE:

If one of the rear seatbacks does not fold flat completely, move the corresponding front seat forward.

⚠ WARNING

Head restraints/headrests should be adjusted properly as they may provide significant protection against injury in an accident. Always replace and adjust them properly if they have been removed for any reason.

BASIC INFORMATION

⚠ WARNING

Head restraints/headrests supplement the other vehicle safety systems. They may provide additional protection against injury in certain rear end collisions. Adjustable head restraints/headrests must be adjusted properly, as specified in this section. Check the adjustment after someone else uses the seat. Do not attach anything to the head restraint/headrest stalk, except for Genuine NISSAN accessories specifically tested for use with the vehicle's head restraint/headrest stalk. Do not remove the head restraint/headrest. Do not use the seat if the head restraint/headrest has been removed. If the head restraint/headrest was removed, reinstall and properly adjust the head restraint/headrest before an occupant uses the seating position. Failure to follow these instructions can reduce the effectiveness of the head restraints/headrests. This may increase the risk of serious injury or death in a collision.

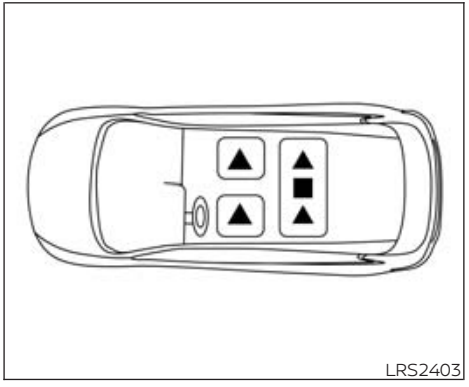

The illustration shows the seating positions equipped with head restraints/headrests.

▲ Indicates the seating position is equipped with a head restraint.

■ Indicates the seating position is equipped with a headrest.

+ Indicates the seating position is not equipped with a head restraint or headrest (if applicable).

- Your vehicle is equipped with a head restraint/headrest that may be integrated, adjustable or non-adjustable.
- Adjustable head restraints/headrests have multiple notches along the stalk(s) to lock them in a desired adjustment position.
- The non-adjustable head restraints/headrests have a single locking notch to secure them to the seat frame.
- Proper Adjustment:
  - For the adjustable type, align the head restraint/headrest so the center of your ear is approximately level with the center of the head restraint/headrest.
  - If your ear position is still higher than the recommended alignment, place the head restraint/headrest at the highest position.
- If the head restraint/headrest has been removed, ensure that it is reinstalled and locked in place before riding in that designated seating position.

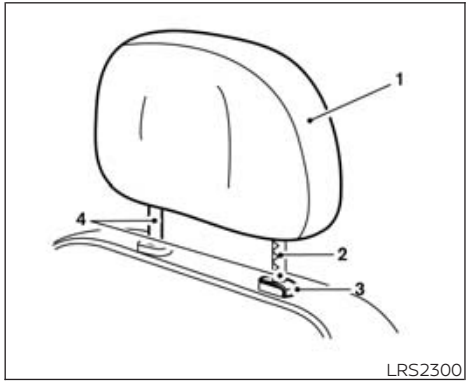

ADJUSTABLE HEAD RESTRAINT/ HEADREST COMPONENTS

1. Removable head restraint/headrest
2. Multiple notches
3. Lock knob
4. Stalks

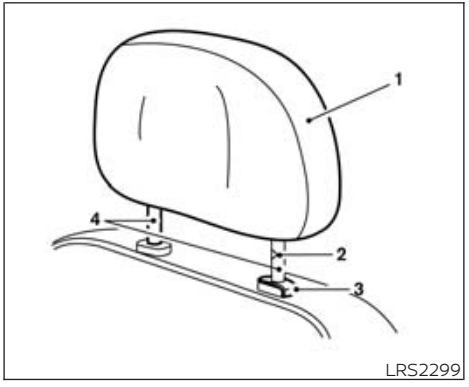

NON-ADJUSTABLE HEAD RESTRAINT/HEADREST COMPONENTS

1. Removable head restraint/headrest
2. Single notch
3. Lock knob
4. Stalks

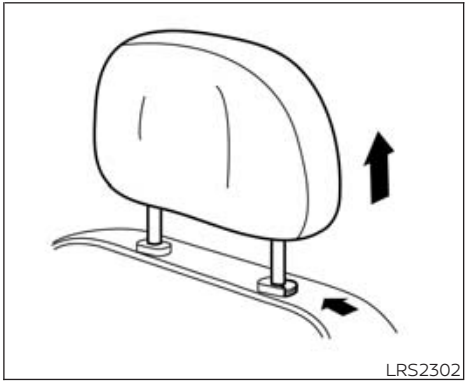

REMOVE

Use the following procedure to remove the head restraint/headrest:

1. Pull the head restraint/headrest up to the highest position.
2. Push and hold the lock knob.
3. Remove the head restraint/headrest from the seat.
4. Store the head restraint/headrest properly in a secure place so it is not loose in the vehicle.

5. Reinstall and properly adjust the head restraint/headrest before an occupant uses the seating position.

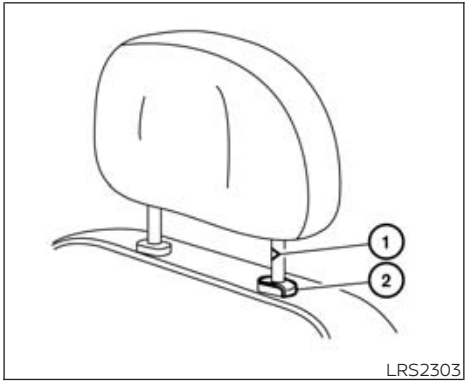

INSTALL

1. Align the head restraint/headrest stalks with the holes in the seat. Make sure that the head restraint/headrest is facing the correct direction. The stalk with the notch (notches) ① must be installed in the hole with the lock knob ②.
2. Push and hold the lock knob and push the head restraint/headrest down.
3. Properly adjust the head restraint/headrest before an occupant uses the seating position.

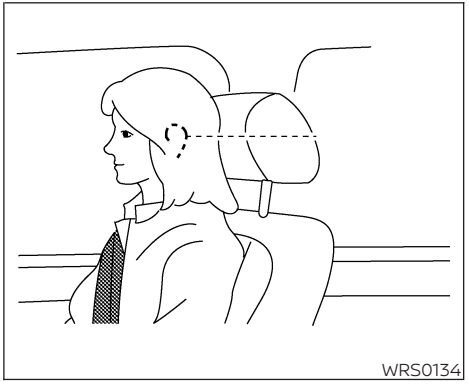

ADJUST

Basic Information

For adjustable head restraint/headrest

Adjust the head restraint/headrest so the center is level with the center of your ears. If your ear position is still higher than the recommended alignment, place the head restraint/headrest at the highest position.

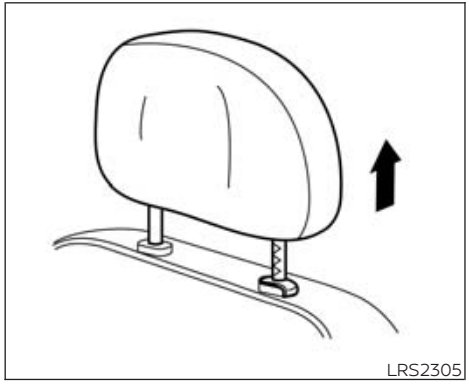

Raise

To raise the head restraint/headrest, pull it up.

Make sure the head restraint/headrest is positioned so the lock knob is engaged in the notch before riding in that designated seating position.

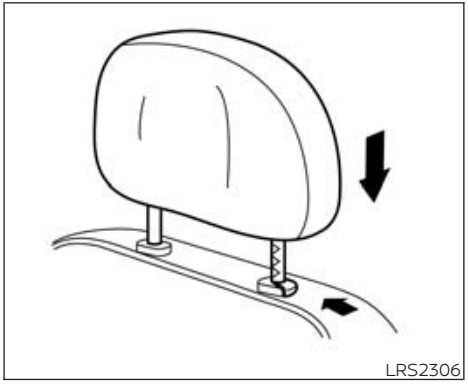

Lower

To lower, push and hold the lock knob and push the head restraint/headrest down.

Make sure the head restraint/headrest is positioned so the lock knob is engaged in the notch before riding in that designated seating position.

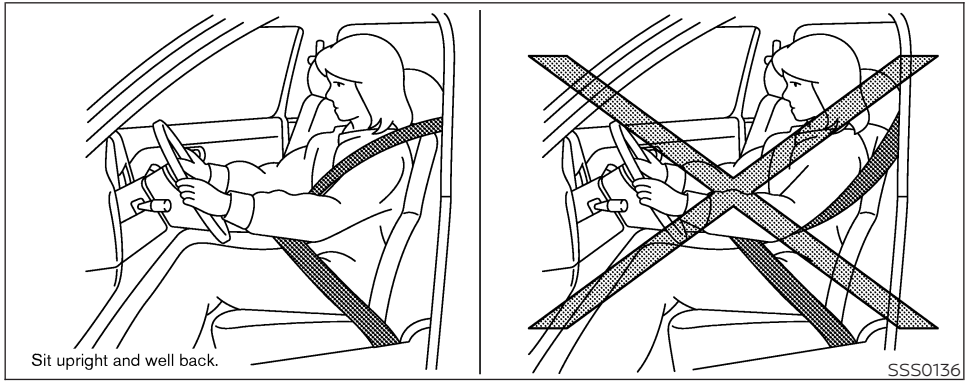

PRECAUTIONS ON SEAT BELT USAGE

If you are wearing your seat belt properly adjusted and you are sitting upright and well back in your seat with both feet on the floor, your chances of being injured or killed in a collision and/or the severity of injury may be greatly reduced. NISSAN strongly encourages you and all of your passengers to buckle up every time you drive, even if your seating position includes a supplemental air bag.

Most U.S. states and Canadian provinces or territories specify that seat belts be worn at all times when a vehicle is being driven.

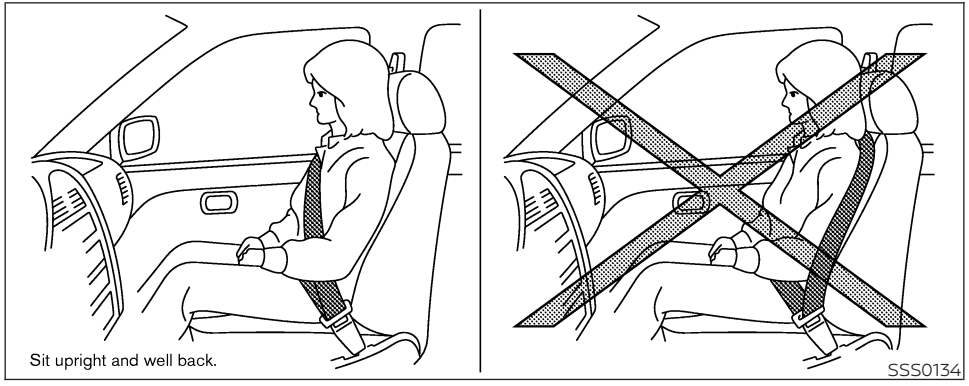

⚠ WARNING

- **Every person who drives or rides in this vehicle should use a seat belt at all times. Children should be in the rear seats and in an appropriate restraint.**

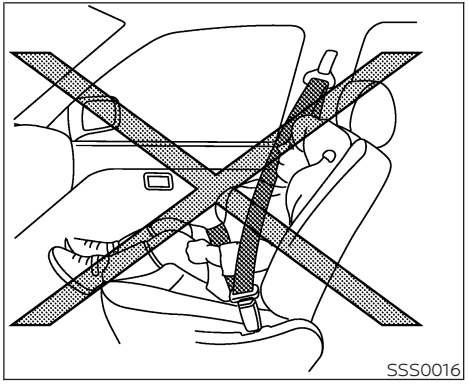

⚠ WARNING

- **The seat belt should be properly adjusted to a snug fit. Failure to do so may reduce the effectiveness of the entire restraint system and increase the chance or severity of injury in an accident. Serious injury or death can occur if the seat belt is not worn properly.**

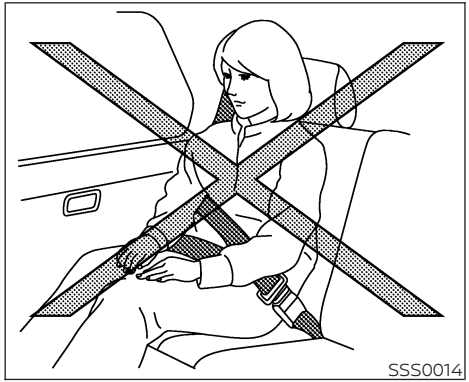

⚠ WARNING

- **Always route the shoulder belt over your shoulder and across your chest. Never put the belt behind your back, under your arm or across your neck. The belt should be away from your face and neck, but not falling off your shoulder.**
- **Position the lap belt as low and snug as possible AROUND THE HIPS, NOT THE WAIST. A lap belt worn too high could increase the risk of internal injuries in an accident.**
- **Be sure the seat belt tongue is securely fastened to the proper buckle.**
- **Do not wear the seat belt inside out or twisted. Doing so may reduce its effectiveness.**
- **Do not allow more than one person to use the same seat belt.**
- **Never carry more people in the vehicle than there are seat belts.**
- **If the seat belt warning light glows continuously or chime continues while the ignition is turned ON with all doors closed and all seat belts fastened, it may indicate a malfunction in the system. Have the system checked. It is recommended that you visit a NISSAN dealer for this service.**
- **No changes should be made to the seat belt system. For example, do not modify the seat belt, add material, or install devices that may change the seat belt routing or tension. Doing so may affect the operation of the seat belt system. Modifying or tampering with the seat belt system may result in serious personal injury.**
- **Once seat belt pretensioner(s) have activated, they cannot be reused and must be replaced together with the retractor. It is recommended that you visit a NISSAN dealer for this service.**
- **All seat belt assemblies, including retractors and attaching hardware, should be inspected after any collision. It is recommended that you visit a NISSAN dealer for this service. NISSAN recommends that all seat belt assemblies in use during a collision be replaced unless the collision was minor and the belts show no damage and continue to operate properly. Seat belt assemblies not in use during a collision should also be inspected and replaced if either damage or improper operation is noted.**
- **All child restraints and attaching hardware should be inspected after any collision. Always follow the restraint manufacturer's inspection instructions and replacement recommendations. The child restraints should be replaced if they are damaged.**

SEAT BELT WARNING LIGHT AND CHIME

The light and chime remind you to fasten the driver, front passenger and rear passenger seat belts. A visual and audible alert will operate in the following conditions:

- If the driver seat belt is not fastened.
- The front passenger's seat belt is not fastened and the seat is occupied by a passenger for 7 seconds after the ignition switch is placed in the ON position.
- The front passenger's seat belt is not fastened and objects or external force on the passenger seat change the seat belt reminder classification to "occupied".
- Any rear passenger seat belt is operated from fastened to unfastened.

For additional information, see:

- "Seat belt warning light and chime" (P. 89).
- "Rear seat belt warning" (P. 120).

The below situations could result in the seat belt warning function operating, even with no occupant present in the front passenger seat:

- Heavy objects placed on the seat.
- Someone pushing or pulling on the front passenger seat.
- An object placed under the front passenger seat.
- An object placed between the seat cushion and center console or between the seat cushion and the door.
- An object hanging on the seat or placed in the seatback pocket.
- A child restraint or other object pressing against the rear of the seatback.

The rear seat belt reminder may operate if the rear seat belts are used without occupants.

PREGNANT WOMEN

NISSAN recommends that pregnant women use seat belts. The seat belt should be worn snug and always position the lap belt as low as possible around the hips, not the waist. Place the shoulder belt over your shoulder and across your chest. Never run the lap/shoulder belt over your abdominal area. Contact your doctor for specific recommendations.

INJURED PERSONS

NISSAN recommends that injured persons use seat belts. Check with your doctor for specific recommendations.

THREE-POINT TYPE SEAT BELT WITH RETRACTOR

Basic Information

⚠WARNING

- **Every person who drives or rides in this vehicle should use a seat belt at all times. Children should be in the rear seats and in an appropriate restraint.**

- **Do not ride in a moving vehicle when the seatback is reclined. This can be dangerous. The shoulder belt will not be against your body. In an accident, you could be thrown into it and receive neck or other serious injuries. You could also slide under the lap belt and receive serious internal injuries.**
- **For the most effective protection when the vehicle is in motion, the seat should be upright. Always sit well back and upright in the seat with both feet on the floor and adjust the seat belt properly.**
- **Do not allow children to play with the seat belts. Most seating positions are equipped with Automatic Locking Retractor (ALR) mode seat belts. If the seat belt becomes wrapped around a child's neck with the ALR mode activated, the child can be seriously injured or killed if the seat belt retracts and becomes tight. This can occur even if the vehicle is parked. Unbuckle the seat belt to release the child. If the seat belt cannot be unbuckled or is already unbuckled, release the child by cutting the seat belt with a suitable tool (such as a knife or scissors) to release the seat belt.**

Fastening the seat belts

1. Adjust the seat. For additional information, see "Front power seat adjustment" (P. 13).

LRS2674

2. Slowly pull the seat belt out of the retractor and insert the tongue into the buckle Ⓐ until you hear and feel the latch engage.
   - **The retractor is designed to lock during a sudden stop or on impact. A slow pulling motion permits the seat belt to move and allows you some freedom of movement in the seat.**
   - **If the seat belt cannot be pulled from its fully retracted position, firmly pull the belt and release it. Then smoothly pull the belt out of the retractor.**

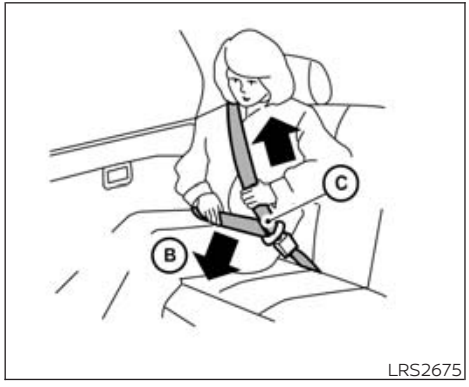

3. Position the lap belt portion **low and snug on the hips** Ⓑ as shown.
4. Pull the shoulder belt portion toward the retractor to take up extra slack Ⓒ. Be sure the shoulder belt is routed over your shoulder and across your chest.

The front passenger seat and the rear seating positions' three-point seat belts have two modes of operation:

- Emergency Locking Retractor (ELR)
- Automatic Locking Retractor (ALR)

The ELR mode allows the seat belt to extend and retract to allow the driver and passengers some freedom of movement in the seat. The ELR locks the seat belt when the vehicle slows down rapidly or during certain impacts.

The ALR mode (child restraint mode) locks the seat belt for child restraint installation.

When the ALR mode is activated, the seat belt cannot be extended again until the seat belt tongue is detached from the buckle and fully retracted. The seat belt returns to the ELR mode after the seat belt fully retracts. For additional information, see "Child restraints" (P. 32).

The ALR mode should be used only for child restraint installation. During normal seat belt use by an occupant, the ALR mode should not be activated. If it is activated, it may cause uncomfortable seat belt tension. It can also change the operation of the front passenger air bag. For additional information, see "Front passenger air bag and status light" (P. 64).

⚠ WARNING

When fastening the seat belts, be certain that the seatbacks are completely secured in the latched position. If they are not completely secured, passengers may be injured in an accident or sudden stop.

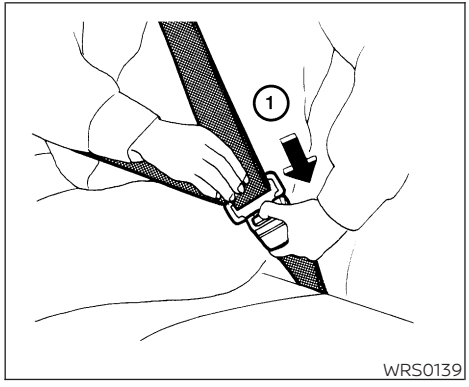

Unfastening the seat belts

To unfasten the seat belt, press the button on the buckle ①. The seat belt automatically retracts.

Checking seat belt operation

Seat belt retractors are designed to lock seat belt movement by two separate methods:

- When the seat belt is pulled quickly from the retractor
- When the vehicle slows down rapidly

To increase your confidence in the seat belts, check the operation as follows:

- Grasp the shoulder belt and pull forward quickly. The retractor should lock and restrict further belt movement.

If the retractor does not lock during this check, get the system checked. It is recommended that you visit a NISSAN dealer for this service, or to learn more about seat belt operation.

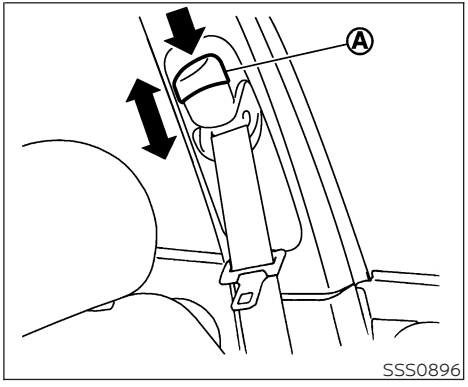

Shoulder belt height adjust button

Shoulder belt height adjustment (front seats)

The shoulder belt anchor height should be adjusted to the position best for you. For additional information, see "Precautions on seat belt usage" (P. 21).

To adjust, press the button Ⓐ and then move the shoulder belt anchor to the desired position so that the belt passes over the center of the shoulder. The belt should be away from your face and neck, but not falling off of your shoulder. Release the adjustment button to lock the shoulder belt anchor into position.

⚠ WARNING

- **After adjustment, release the adjustment button and try to move the shoulder belt anchor up and down to make sure it is securely fixed in position.**
- **The shoulder belt anchor height should be adjusted to the position best for you. Failure to do so may reduce the effectiveness of the entire restraint system and increase the chance or severity of injury in an accident.**
- **The shoulder belt should rest on the middle of the shoulder. It must not rest against the neck.**
- **Be sure that the seat belt is not twisted in any way.**
- **Be sure that the shoulder belt anchor is secured by trying to move the shoulder belt anchor up and down after adjustment.**

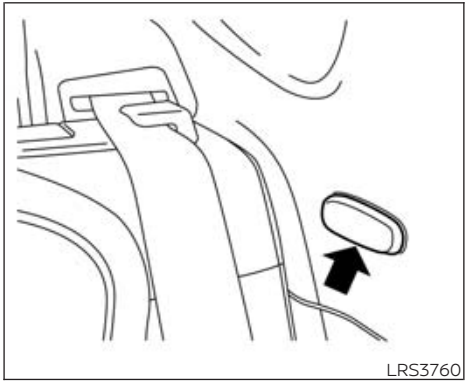

Seat belt hook

When the seat belt is not in use and when folding down the rear seats, hook the rear seat belts on the seat belt hooks.

SEAT BELT EXTENDERS

If, because of body size or driving position, it is not possible to properly fit the lap/shoulder belt and fasten it, an extender that is compatible with the installed seat belts is available for purchase. The extender adds approximately 8 in (200 mm) of length and is available for the:

- Driver and front passenger seating positions

It is recommended that you visit a NISSAN dealer for assistance with purchasing an extender if an extender is required.

⚠ WARNING

- **Only NISSAN seat belt extenders, made by the same company which made the original equipment seat belts, should be used with NISSAN seat belts.**
- **Adults and children who can use the standard seat belt should not use an extender. Such unnecessary use could result in serious personal injury in the event of an accident.**

- **Never use seat belt extenders to install child restraints. If the child restraint is not secured properly, the child could be seriously injured or killed in a collision or a sudden stop.**

SEAT BELT MAINTENANCE

- **To clean the seat belt webbing,** apply a mild soap solution or any solution recommended for cleaning upholstery or carpet. Then wipe with a cloth and allow the seat belts to dry in the shade. Do not allow the seat belts to retract until they are completely dry.
- **If dirt builds up in the shoulder belt guide of the seat belt anchors,** the seat belts may retract slowly. Wipe the shoulder belt guide with a clean, dry cloth.
- **Periodically check to see that the seat belt and the metal components,** such as buckles, tongues, retractors, flexible wires and anchors, work properly. If loose parts, deterioration, cuts or other damage on the webbing is found, the entire seat belt assembly should be replaced.

BASIC INFORMATION

⚠WARNING

Do not allow children to play with the seat belts. Most seating positions are equipped with Automatic Locking Retractor (ALR) mode seat belts. If the seat belt becomes wrapped around a child's neck with the ALR mode activated, the child can be seriously injured or killed if the seat belt retracts and becomes tight. This can occur even if the vehicle is parked. Unbuckle the seat belt to release the child. If the seat belt cannot be unbuckled or is already unbuckled, release the child by cutting the seat belt with a suitable tool (such as a knife or scissors) to release the seat belt.

Children need adults to help protect them. They need to be properly restrained.

In addition to the general information in this manual, child safety information is available from many other sources, including doctors, teachers, government traffic safety offices, and community organizations. Every child is different, so be sure to learn the best way to transport your child.

There are three basic types of child restraint systems:

- Rear-facing child restraints
- Forward-facing child restraints
- Booster seats

The proper restraint depends on the child's size. Generally, infants up to about 1 year and less than 20 lbs. (9 kg) should be placed in rear-facing child restraints. Forward-facing child restraints are available for children who outgrow rear-facing child restraints and are at least 1 year old. Booster seats are used to help position a vehicle lap/shoulder belt on a child who can no longer use a forward-facing child restraint.

⚠WARNING

Infants and children need special protection. The vehicle's seat belts may not fit them properly. The shoulder belt may come too close to the face or neck. The lap belt may not fit over their small hip bones. In an accident, an improperly fitting seat belt could cause serious or fatal injury. Always use appropriate child restraints.

All U.S. states and Canadian provinces or territories require the use of approved child restraints for infants and small children. For additional information, see "Child restraints" (P. 32).

A child restraint may be secured in the vehicle by using either the LATCH (Lower Anchors and Tethers for CHildren) system or with the vehicle seat belt. For additional information, see "Child restraints" (P. 32).

NISSAN recommends that all pre-teens and children be restrained in the rear seat. Studies show that children are safer when properly restrained in the rear seat than in the front seat.

This is especially important because your vehicle has a supplemental restraint system (air bag system) for the front passenger. For additional information, see "Supplemental Restraint System (SRS)" (P. 53).

INFANTS

Infants up to at least 1 year old should be placed in a rear-facing child restraint. NISSAN recommends that infants be placed in child restraints that comply with Federal Motor Vehicle Safety Standards or Canadian Motor Vehicle Safety Standards. You should choose a child restraint that fits your vehicle and always follow the manufacturer's instructions for installation and use.

SMALL CHILDREN

Children that are over 1 year old and weigh at least 20 lbs. (9 kg) should remain in a rear-facing child restraint as long as possible up to the height or weight limit of the child restraint. Children who outgrow the height or weight limit of the rear-facing child restraint and are at least 1 year old should be secured in a forward-facing child restraint with a harness. Refer to the manufacturer's instructions for minimum and maximum weight and height recommendations. NISSAN recommends that small children be placed in child restraints that comply with Federal Motor Vehicle Safety Standards or Canadian Motor Vehicle Safety Standards. You should choose a child restraint that fits your vehicle and always follow the manufacturer's instructions for installation and use.

LARGER CHILDREN

Children should remain in a forward-facing child restraint with a harness until they reach the maximum height or weight limit allowed by the child restraint manufacturer. Once a child outgrows the height or weight limit of the harness-equipped forward-facing child restraint, NISSAN recommends that the child be placed in a commercially available booster seat to obtain proper seat belt fit. For a seat belt to fit properly, the booster seat should raise the child so that the shoulder belt is properly positioned across the chest and the top, middle portion of the shoulder. The shoulder belt should not cross the neck or face and should not fall off the shoulder. The lap belt should lie snugly across the lower hips or upper thighs, not the abdomen.

A booster seat can only be used in seating positions that have a three-point type seat belt. The booster seat should fit the vehicle seat and have a label certifying that it complies with Federal Motor Vehicle Safety Standards or Canadian Motor Vehicle Safety Standards. Once the child has grown so the shoulder belt is no longer on or near the face and neck and the lap belt can be positioned properly across the lower hips or upper thighs, use the seat belt without the booster seat.

A booster seat should be used until the child can pass the seat belt fit test below:

- Are the child's back and hips against the vehicle seatback?
- Is the child able to sit without slouching?
- Do the child's knees bend easily over the front edge of the seat with feet flat on the floor?
- Can the child safely wear the seat belt (lap belt low and snug across the hips and shoulder belt across mid-chest and shoulder)?
- Is the child able to use the properly adjusted head restraint/headrest?
- Will the child be able to stay in position for the entire ride?

LRS2690

If you answered no to any of these questions, the child should remain in a booster seat using a three-point type seat belt.

NOTE:

Laws in some communities may follow different guidelines. Check local and state regulations to confirm your child is using the correct restraint system before traveling.

⚠ WARNING

Never let a child stand or kneel on any seat and do not allow a child in the cargo area. The child could be seriously injured or killed in a sudden stop or collision.

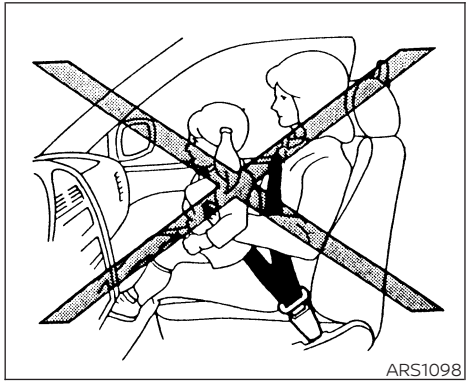

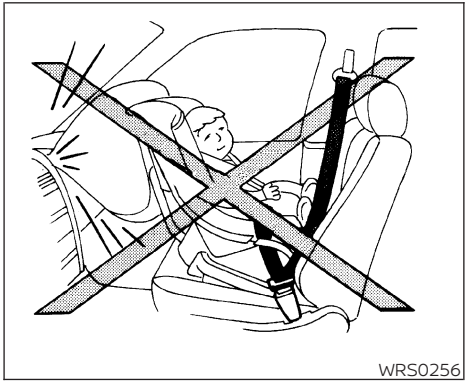

PRECAUTIONS ON CHILD RESTRAINTS

WARNING

- **Failure to follow the warnings and instructions for proper use and installation of child restraints could result in serious injury or death of a child or other passengers in a sudden stop or collision:**
  - **The child restraint must be used and installed properly. Always follow all of the child restraint manufacturer's instructions for installation and use.**
  - **Infants and children should never be held on anyone's lap. Even the strongest adult cannot resist the forces of a collision.**
  - **Do not put a seat belt around both a child and another passenger.**
  - **NISSAN recommends that all child restraints be installed in the rear seat. Studies show that children are safer when properly restrained in the rear seat than in the front seat. If you must install a forward-facing child restraint in the front seat, see "Forward-facing child restraint installation using the seat belts" (P. 45).**
  - **Even with the NISSAN Advanced Air Bag System, never install a rear-facing child restraint in the front seat. An inflating air bag could seriously injure or kill a child. A rear-facing child restraint must only be used in the rear seat.**
  - **Be sure to purchase a child restraint that will fit the child and vehicle. Some child restraints may not fit properly in your vehicle.**

- **Child restraint anchorages are designed to withstand only those loads imposed by correctly fitted child restraints. Under no circumstances are they to be used to attach adult seat belts, or other items or equipment to the vehicle. Doing so could damage the child restraint anchorages. The child restraint will not be properly installed using the damaged anchorage, and a child could be seriously injured or killed in a collision.**
- **Never use the anchor points for adult seat belts, or other items.**
- **A child restraint with a top tether strap should not be used in the front passenger seat.**
- **Keep seatbacks as upright as possible after fitting the child restraint.**
- **Infants and children should always be placed in an appropriate child restraint while in the vehicle.**

- **When the child restraint is not in use, keep it secured with the LATCH system or a seat belt. In a sudden stop or collision, loose objects can injure occupants or damage the vehicle.**

⚠ CAUTION

A child restraint in a closed vehicle can become very hot. Check the seating surface and buckles before placing a child in the child restraint.

This vehicle is equipped with a universal child restraint anchor system, referred to as the LATCH (Lower Anchors and Tethers for CHildren) system. Some child restraints include rigid or webbing-mounted attachments that can be connected to these anchors. For additional information, see "LATCH (Lower Anchors and Tethers for CHildren) system" (P. 34).

If you do not have a LATCH compatible child restraint, the vehicle seat belts can be used.

Several manufacturers offer child restraints for infants and children of various sizes. When selecting any child restraint, keep the following points in mind:

- Choose only a restraint with a label certifying that it complies with Federal Motor Vehicle Safety Standard 213 or Canadian Motor Vehicle Safety Standard 213.
- Check the child restraint in your vehicle to be sure it is compatible with the vehicle's seat and seat belt system.
- If the child restraint is compatible with your vehicle, place your child in the child restraint and check the various adjustments to be sure the child restraint is compatible with your child. Choose a child restraint that is designed for your child's height and weight. Always follow all recommended procedures.
- If the combined weight of the child and child restraint is less than 65 lbs. (29.5 kg), you may use either the LATCH anchors or the seat belt to install the child restraint (not both at the same time).
- If the combined weight of the child and child restraint is greater than 65 lbs. (29.5 kg), use the vehicle's seat belt (not the lower anchors) to install the child restraint.
- Be sure to follow the child restraint manufacturer's instructions for installation.

All U.S. states and Canadian provinces or territories require that infants and small children be restrained in an approved child restraint at all times while the vehicle is being operated. Canadian law requires the top tether strap on forward-facing child restraints be secured to the designated anchor point on the vehicle.

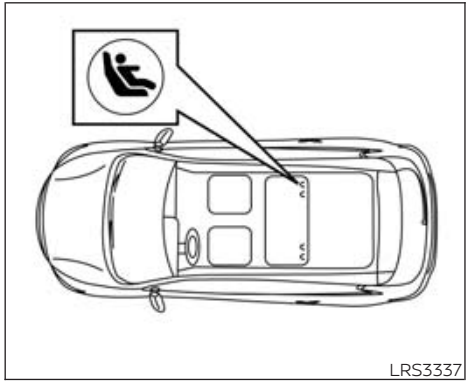

LATCH system lower anchor locations

LATCH (Lower Anchors and Tethers for CHildren) SYSTEM

Basic Information

Your vehicle is equipped with special anchor points that are used with LATCH system compatible child restraints. This system may also be referred to as the ISOFIX or ISOFIX compatible system. With this system, you do not have to use a vehicle seat belt to secure the child restraint unless the combined weight of the child and child restraint exceeds 65 lbs. (29.5 kg). If the combined weight of the child and child restraint is greater than 65 lbs. (29.5 kg) use the vehicle's seat belt (not the lower anchors) to install the child restraint. Be sure to follow the child restraint manufacturer's instructions for installation.

The LATCH anchor points can be used to install child restraints in either the rear outboard seating positions or in the center rear seating position. Please refer to the following section of this Owner's Manual for specific information about installing a child restraint in the center rear seating position using the LATCH anchors.

LATCH lower anchor

⚠WARNING

Failure to follow the warnings and instructions for proper use and installation of child restraints could result in serious injury or death of a child or other passengers in a sudden stop or collision:

- **Only attach LATCH system compatible child restraints to the Lower Anchors shown in the illustration. For additional information, refer to the following sections of this Owner's Manual for installation guidance.**
- **Inspect the lower anchors by inserting your fingers into the lower anchor area. Feel to make sure there are no obstructions over the anchors such as seat belt webbing or seat cushion material. The child restraint will not be secured properly if the lower anchors are obstructed.**

Child restraint anchorages are designed to withstand only those loads imposed by correctly fitted child restraints. Under no circumstances are they to be used to attach adult seat belts, or other items or equipment to the vehicle. Doing so could damage the child restraint anchorages. The child restraint will not be properly installed using the damaged anchorage, and a child could be seriously injured or killed in a collision.

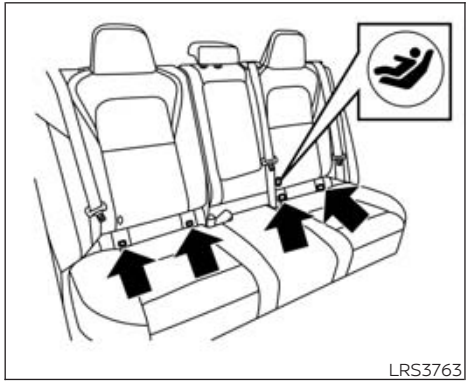

LATCH label locations rear bench

LATCH lower anchor location

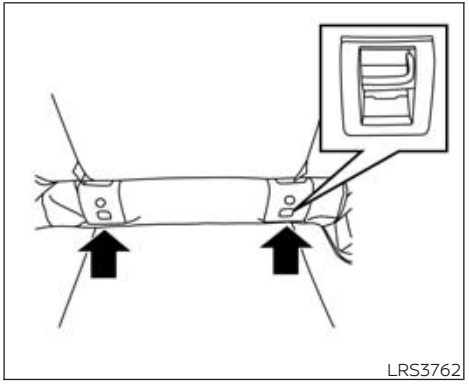

The LATCH lower anchors are located behind the anchor covers. A label is attached to the seatback and on the cover to help you locate the LATCH lower anchors.

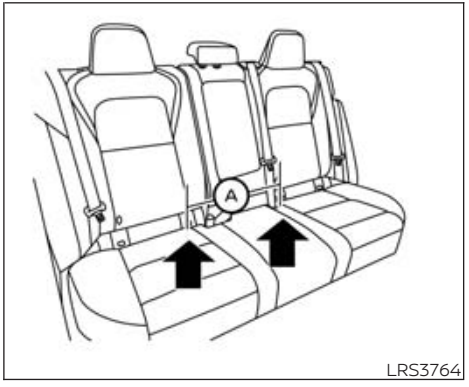

LATCH in the center rear seating position

There are no LATCH anchors dedicated to the center rear seating position. However, the inboard LATCH anchors belonging to the two outboard seating positions (indicated by the arrows) can be used together to secure a CRS in the center rear seating position. These anchors are separated by a distance Ⓐ of 17.2 in (438.5 mm). Before attempting to secure a CRS in this seating position, ensure that the CRS manufacturer's instructions permit the use of LATCH anchors with the spacing indicated above.

(These are sometimes referred to as "shared anchors" or "borrowed anchors.")

CRS with rigid lower attachments cannot be installed in the center seat. This type of CRS should only be installed in the outboard seating positions.

⚠ WARNING

Never attach two CRS attachments to the same LATCH anchor. This may overload the anchor in a collision, which could increase the risk of the occupant's serious injury or death.

When installing the CRS in the center rear seating position with the inboard LATCH anchors, be careful to ensure any occupant or CRS in the outboard seating positions is properly restrained using the vehicle seat belt and there is no interference with the center CRS installation. If the outboard occupants cannot be properly restrained, consider using the vehicle seat belt to restrain the CRS in the center seating position, or moving the CRS to another position instead.

When installing a CRS in the center seating position, use the seat back recline feature to align the left and right sides of the seat back, creating one evenly reclined surface. Never install a CRS in the center seating position when one part of the seat back is further reclined than the other. This may create an unstable surface on which to install the CRS. Failure to evenly recline the seat backs before CRS installation could increase the risk of the occupant's serious injury or death. Remember to re-check that the CRS is properly installed any time the seats are reclined or adjusted.

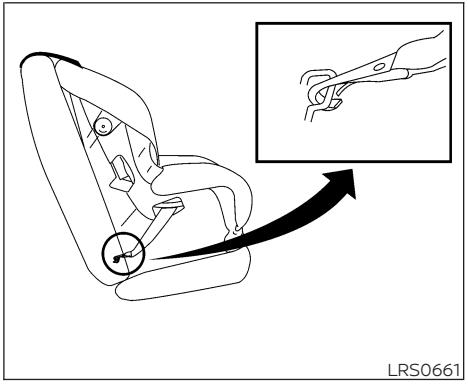

LATCH webbing-mounted attachment

Installing child restraint LATCH lower anchor attachments

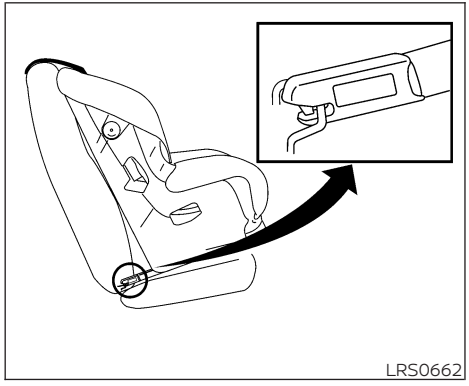

LATCH rigid-mounted attachment

LATCH compatible child restraints include two rigid or webbing-mounted attachments that can be connected to two anchors located at certain seating positions in your vehicle. With this system, you do not have to use a vehicle seat belt to secure the child restraint. Check your child restraint for a label stating that it is compatible with LATCH. This information may also be in the instructions provided by the child restraint manufacturer.

When installing a child restraint, carefully read and follow the instructions in this manual and those supplied with the child restraint.

Top tether anchor

WARNING

- **Do not allow cargo to contact the top tether strap when it is attached to the top tether anchor. Properly secure the cargo so it does not contact the top tether strap. Cargo that is not properly secured or cargo that contacts the top tether strap may damage it during a collision. A child could be seriously injured or killed in a collision if the top tether strap is damaged.**
- **Child restraint anchorages are designed to withstand only those loads imposed by correctly fitted child restraints. Under no circumstances are they to be used for adult seat belts, harnesses, or for attaching other items or equipment to the vehicle. Doing so could damage the child restraint anchorages. The child restraint will not be properly installed using the damaged anchorages, and a child could be seriously injured or killed in a collision.**

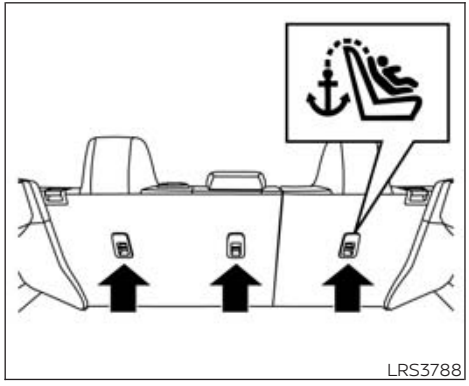

Rear bench seat

Top tether anchor point locations

Anchor points are located on the back of the rear seats.

If you have any questions when installing a top tether strap, it is recommended that you visit a NISSAN dealer for this service.

REAR-FACING CHILD RESTRAINT INSTALLATION USING LATCH

For additional information, see all Warnings and Cautions in "Child safety" (P. 29) and "Child restraints" (P. 32) before installing a child restraint.

Do not use the lower anchors if the combined weight of the child and the child restraint exceeds 65 lbs. (29.5 kg). If the combined weight of the child and the child restraint is greater than 65 lbs. (29.5 kg), use the vehicle's seat belt (not the lower anchors) to install the child restraint. Be sure to follow the child restraint manufacturer's instructions for installation.

Follow these steps to install a rear-facing child restraint in the rear bench seats using the LATCH system:

1. Position the child restraint on the seat. Always follow the child restraint manufacturer's instructions.

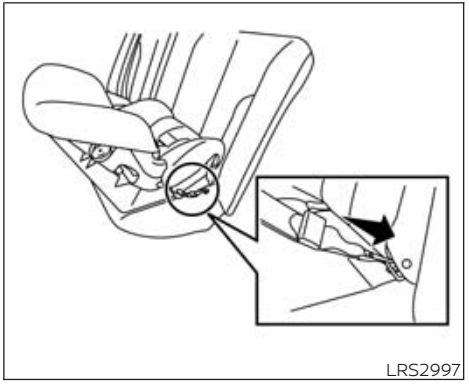

Rear-facing webbing-mounted – step 2

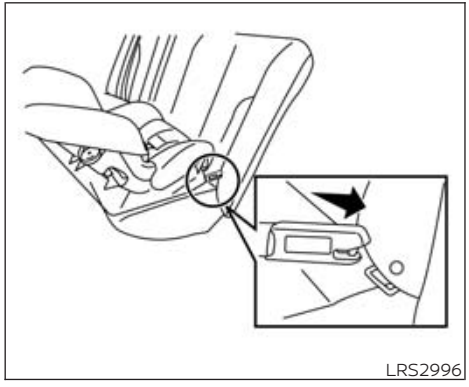

Rear-facing rigid-mounted – step 2

2. Secure the child restraint anchor attachments to the LATCH lower anchors. Check to make sure the LATCH attachment is properly attached to the lower anchors.

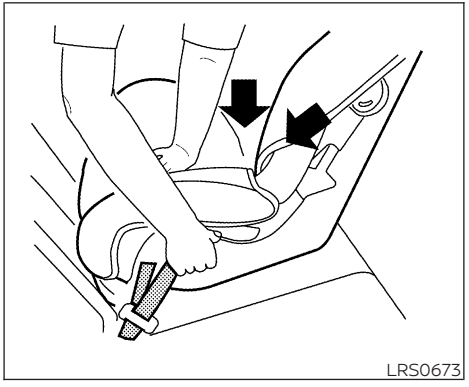

Rear-facing – step 3

3. For child restraints that are equipped with webbing-mounted attachments, remove any additional slack from the anchor attachments. Press downward and rearward firmly in the center of the child restraint with your hand to compress the vehicle seat cushion and seatback while tightening the webbing of the anchor attachments.

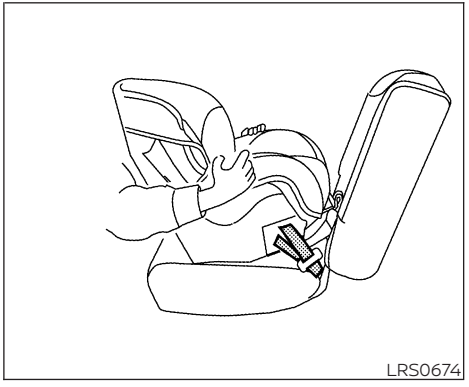

Rear-facing – step 4

4. After attaching the child restraint, test it before you place the child in it. Push it from side to side while holding the child restraint near the LATCH attachment path. The child restraint should not move more than 1 inch (25 mm), from side to side. Try to tug it forward and check to see if the LATCH attachment holds the restraint in place. If the restraint is not secure, tighten the LATCH attachment as necessary, or put the restraint in another seat and test it again.

You may need to try a different child restraint or try installing by using the vehicle seat belt (if applicable). Not all child restraints fit in all types of vehicles.

5. Check to make sure the child restraint is properly secured prior to each use. If the child restraint is loose, repeat steps 2 through 4.

REAR-FACING CHILD RESTRAINT INSTALLATION USING THE SEAT BELTS

⚠ WARNING

The three-point seat belt with Automatic Locking Retractor (ALR) must be used when installing a child restraint. Failure to use the ALR mode will result in the child restraint not being properly secured. The restraint could tip over or be loose and cause injury to a child in a sudden stop or collision. Also, it can change the operation of the front passenger air bag. For additional information, see "Front passenger air bag and status light" (P. 64).

For additional information, see all Warnings and Cautions in "Child safety" (P. 29) and "Child restraints" (P. 32) before installing a child restraint.

Do not use the lower anchors if the combined weight of the child and the child restraint exceeds 65 lbs. (29.5 kg). If the combined weight of the child and the child restraint is greater than 65 lbs. (29.5 kg), use the vehicle's seat belt (not the lower anchors) to install the child restraint. Be sure to follow the child restraint manufacturer's instructions for installation.

Follow these steps to install a rear-facing child restraint using the vehicle seat belts in the rear seats:

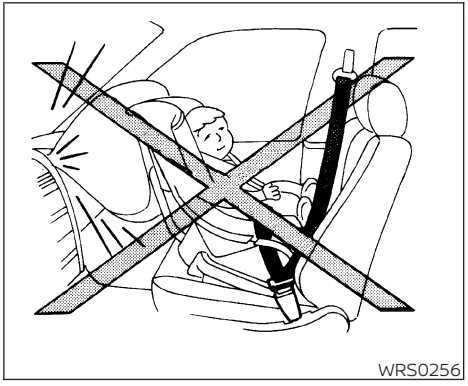

Rear-facing – step 1

1. **Child restraints for infants must be used in the rear-facing direction and therefore must not be used in the front seat.** Position the child restraint on the seat. Always follow the child restraint manufacturer's instructions.

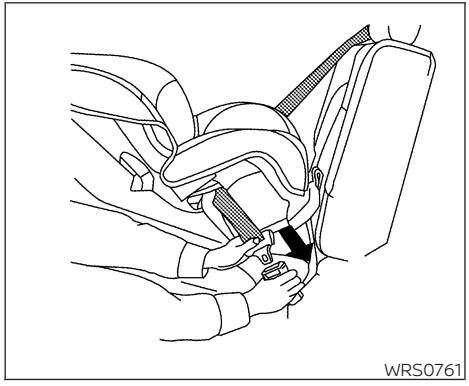

Rear-facing – step 2

2. Route the seat belt tongue through the child restraint and insert it into the buckle until you hear and feel the latch engage. Be sure to follow the child restraint manufacturer's instructions for belt routing.

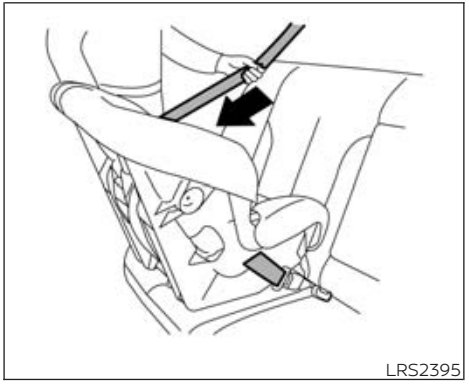

Rear-facing – step 3

3. Pull the shoulder belt until the belt is fully extended. At this time, the seat belt retractor is in the ALR mode (child restraint mode). It reverts to the ELR mode when the seat belt is fully retracted.

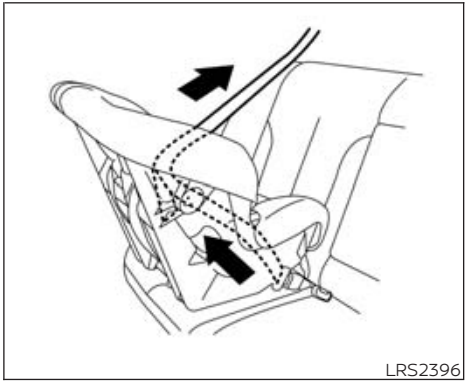

Rear-facing – step 4

4. Allow the seat belt to retract. Pull up on the shoulder belt to remove any slack in the belt.

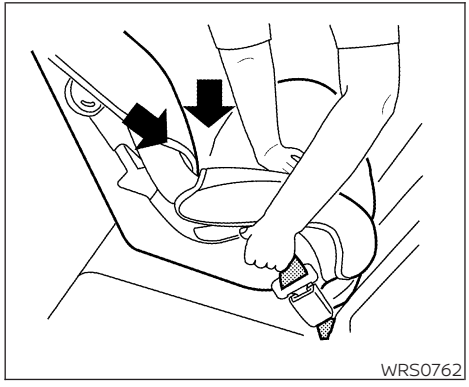

Rear-facing – step 5

5. Remove any additional slack from the seat belt; press downward and rearward firmly in the center of the child restraint to compress the vehicle seat cushion and seatback while pulling up on the seat belt.

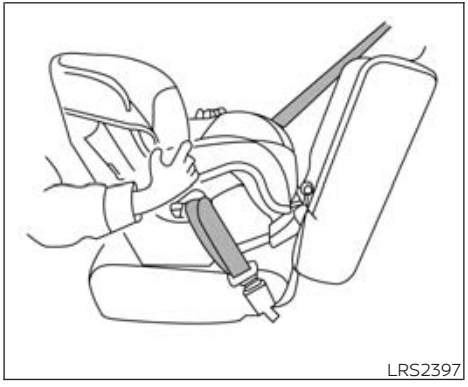

Rear-facing – step 6

6. After attaching the child restraint, test it before you place the child in it. Push it from side to side while holding the child restraint near the seat belt path. The child restraint should not move more than 1 inch (25 mm), from side to side. Try to tug it forward and check to see if the belt holds the restraint in place. If the restraint is not secure, tighten the seat belt as necessary, or put the restraint in another seat and test it again. You may need to try a different child restraint. Not all child restraints fit in all types of vehicles.
7. Check to make sure that the child restraint is properly secured prior to each use. If the seat belt is not locked, repeat steps 1 through 6.

After the child restraint is removed and the seat belt fully retracted, the ALR mode (child restraint mode) is canceled.

FORWARD-FACING CHILD RESTRAINT INSTALLATION USING LATCH

For additional information, see all Warnings and Cautions in "Child safety" (P. 29) and "Child restraints" (P. 32) before installing a child restraint.

Do not use the lower anchors if the combined weight of the child and the child restraint exceeds 65 lbs. (29.5 kg). If the combined weight of the child and the child restraint is greater than 65 lbs. (29.5 kg), use the vehicle's seat belt (not the lower anchors) to install the child restraint. Be sure to follow the child restraint manufacturer's instructions for installation.

Follow these steps to install a forward-facing child restraint in the rear bench seats using the LATCH system:

1. Position the child restraint on the seat. Always follow the child restraint manufacturer's instructions.

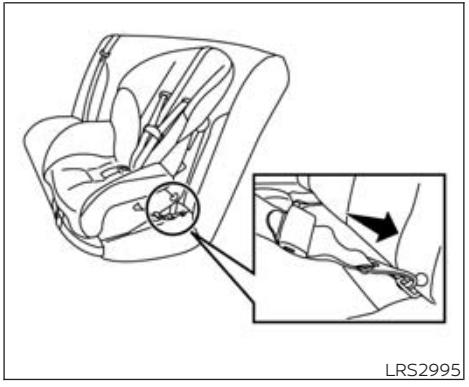

Forward-facing webbing-mounted – step 2

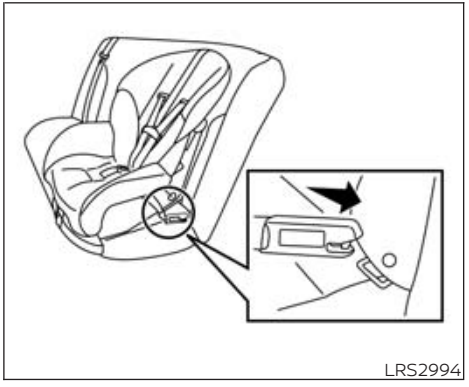

Forward-facing rigid-mounted – step 2

2. Secure the child restraint anchor attachments to the LATCH lower anchors. Check to make sure the LATCH attachment is properly attached to the lower anchors.

   If the child restraint is equipped with a top tether strap, route the top tether strap and secure the tether strap to the tether anchor point. For additional information, see "Installing top tether strap" (P. 48).

Do not install child restraints that require the use of a top tether strap in seating positions that do not have a top tether anchor.

3. The back of the child restraint should be secured against the vehicle seatback.

   If necessary, adjust or remove the head restraint/headrest to obtain the correct child restraint fit. If the head restraint/headrest is removed, store it in a secure place. **Be sure to reinstall the head restraint/headrest when the child restraint is removed.** For additional information, see "Head restraints/headrests" (P. 17).

   If the seating position does not have an adjustable head restraint/headrest and it is interfering with the proper child restraint fit, try another seating position or a different child restraint.

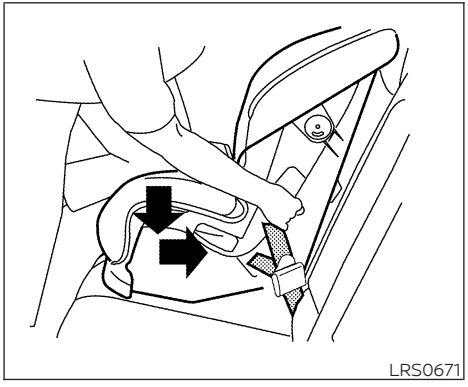

Forward-facing – step 4

4. For child restraints that are equipped with webbing-mounted attachments, remove any additional slack from the anchor attachments. Press downward and rearward firmly in the center of the child restraint with your knee to compress the vehicle seat cushion and seatback while tightening the webbing of the anchor attachments.

5. Tighten the tether strap according to the manufacturer's instructions to remove any slack.

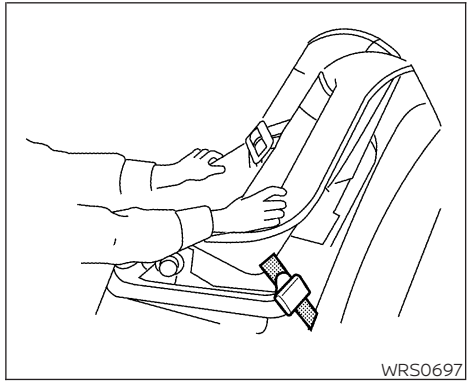

Forward-facing – step 6

6. After attaching the child restraint, test it before you place the child in it. Push it from side to side while holding the child restraint near the LATCH attachment path. The child restraint should not move more than 1 inch (25 mm), from side to side. Try to tug it forward and check to see if the LATCH attachment holds the restraint in place. If the restraint is not secure, tighten the LATCH attachment as necessary, or put the restraint in another seat and test it again. You may need to try a different child restraint. Not all child restraints fit in all types of vehicles.

7. Check to make sure the child restraint is properly secured prior to each use. If the child restraint is loose, repeat steps 2 through 6.

FORWARD-FACING CHILD RESTRAINT INSTALLATION USING THE SEAT BELTS

⚠ WARNING

The three-point seat belt with Automatic Locking Retractor (ALR) must be used when installing a child restraint. Failure to use the ALR mode will result in the child restraint not being properly secured. The restraint could tip over or be loose and cause injury to a child in a sudden stop or collision. Also, it can change the operation of the front passenger air bag. For additional information, see "Front passenger air bag and status light" (P. 64).

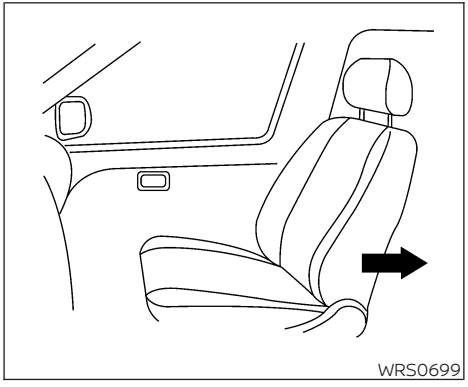

Forward-facing (front passenger seat) – step 1

For additional information, see all Warnings and Cautions in "Child safety" (P. 29) and "Child restraints" (P. 32) before installing a child restraint.

Do not use the lower anchors if the combined weight of the child and the child restraint exceeds 65 lbs. (29.5 kg). If the combined weight of the child and the child restraint is greater than 65 lbs. (29.5 kg), use the vehicle's seat belt (not the lower anchors) to install the child restraint. Be sure to follow the child restraint manufacturer's instructions for installation.

Follow these steps to install a forward-facing child restraint using the vehicle seat belt in the rear seats or in the front passenger seat:

1. **If you must install a child restraint in the front seat, it should be placed in a forward-facing direction only. Move the seat to the rearmost position. Child restraints for infants must be used in the rear-facing direction and, therefore, must not be used in the front seat.**
2. Position the child restraint on the seat. Always follow the child restraint manufacturer's instructions.

   The back of the child restraint should be secured against the vehicle seatback.

   If necessary, adjust or remove the head restraint/headrest to obtain the correct child restraint fit. If the head restraint/headrest is removed, store it in a secure place. **Be sure to reinstall the head restraint/headrest when the child restraint is removed.** For additional information, see "Head restraints/headrests" (P. 17).

If the seating position does not have an adjustable head restraint/headrest and it is interfering with the proper child restraint fit, try another seating position or a different child restraint.

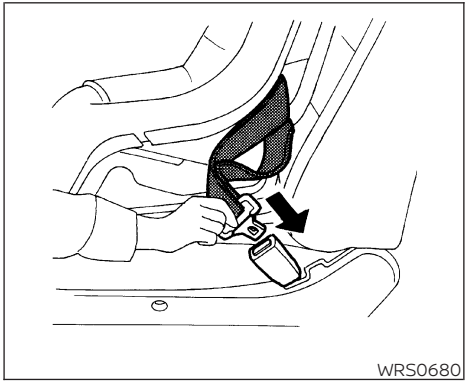

Forward-facing – step 3

3. Route the seat belt tongue through the child restraint and insert it into the buckle until you hear and feel the latch engage. Be sure to follow the child restraint manufacturer's instructions for belt routing.

   If the child restraint is equipped with a top tether strap, route the top tether strap and secure the tether strap to the tether anchor point. For additional information, see "Installing top tether strap" (P. 48).

Do not install child restraints that require the use of a top tether strap in seating positions that do not have a top tether anchor.

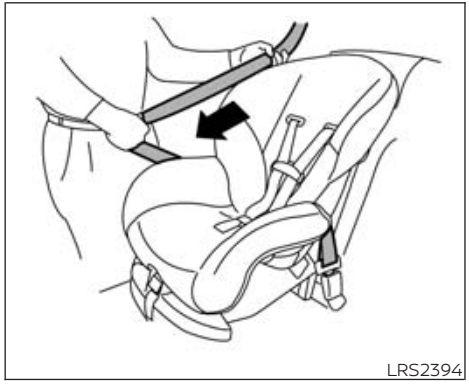

Forward-facing – step 4

4. Pull the shoulder belt until the belt is fully extended. At this time, the seat belt retractor is in the ALR mode (child restraint mode). It reverts to ELR mode when the seat belt is fully retracted.
5. Allow the seat belt to retract. Pull up on the shoulder belt to remove any slack in the belt.

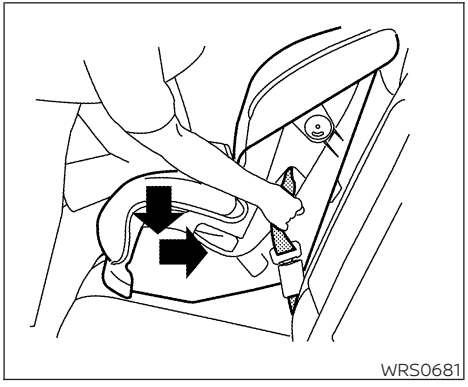

Forward-facing – step 6

6. Remove any additional slack from the seat belt; press downward and rearward firmly in the center of the child restraint with your knee to compress the vehicle seat cushion and seatback while pulling up on the seat belt.
7. Tighten the tether strap according to the manufacturer's instructions to remove any slack.

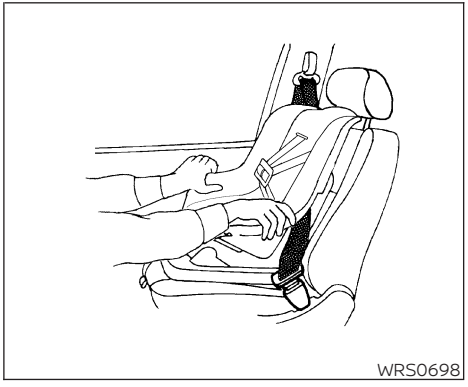

Forward-facing – step 8

8. After attaching the child restraint, test it before you place the child in it. Push it from side to side while holding the child restraint near the seat belt path. The child restraint should not move more than 1 inch (25 mm), from side to side. Try to tug it forward and check to see if the belt holds the restraint in place. If the restraint is not secure, tighten the seat belt as necessary, or put the restraint in another seat and test it again. You may need to try a different child restraint. Not all child restraints fit in all types of vehicles.

9. Check to make sure the child restraint is properly secured prior to each use. If the seat belt is not locked, repeat steps 2 through 8.

Forward-facing – step 10

10. If the child restraint is installed in the front passenger seat, place the ignition switch in the ON position. The front passenger air bag status light should illuminate. If this light is not illuminated see "Front passenger air bag and status light" (P. 64). **Move the child restraint to another seating position.** Have the system checked. It is recommended that you visit a NISSAN dealer for this service.

After the child restraint is removed and the seat belt is fully retracted, the ALR mode (child restraint mode) is canceled.

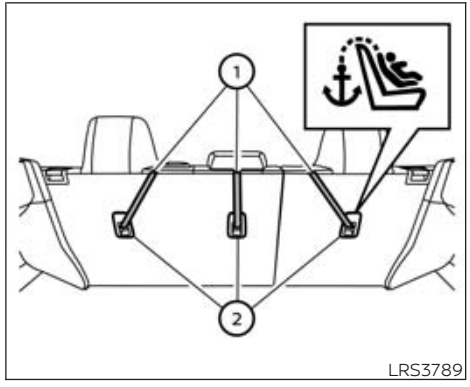

Rear bench seat

① Top tether strap

② Anchor point

INSTALLING TOP TETHER STRAP

First, secure the child restraint with the LATCH or seat belt, as applicable.

1. Position the top tether strap ① as shown.
2. Raise or remove the center head restraint/headrest. If removed, store it in a secure place. Be sure to reinstall the head restraint/headrest after the child restraint is removed. For additional information, see "Head restraints/headrests" in (P. 17).

3. Secure the tether strap to the tether anchor point ② as shown.
4. Tighten the tether strap according to the manufacturer's instructions to remove any slack. Make sure the center head restraint/headrest does not contact the top tether strap.

If you have any questions when installing a top tether strap, it is recommended that you visit a NISSAN dealer for this service.

⚠WARNING

Child restraint anchorages are designed to withstand only those loads imposed by correctly fitted child restraints. Under no circumstances are they to be used for adult seat belts, harnesses, or for attaching other items or equipment to the vehicle. Doing so could damage the child restraint anchorages. The child restraint will not be properly installed using the damaged anchorage, and a child could be seriously injured or killed in a collision.

BOOSTER SEATS

Basic Information

For additional information on installing a booster seat in your vehicle, follow the instructions outlined in this section.

Precautions on booster seats

⚠WARNING

If a booster seat and seat belt are not used properly, the risk of a child being injured or killed in a sudden stop or collision greatly increases:

- **Make sure the shoulder portion of the belt is away from the child's face and neck and the lap portion of the belt does not cross the stomach.**
- **Make sure the shoulder belt is not behind the child or under the child's arm.**
- **A booster seat must only be installed in a seating position that has a lap/shoulder belt.**

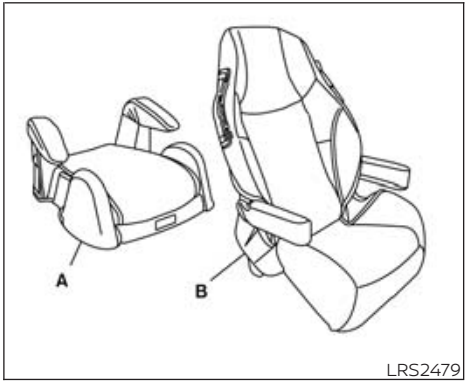

A. Low back booster seat

B. High back booster seat

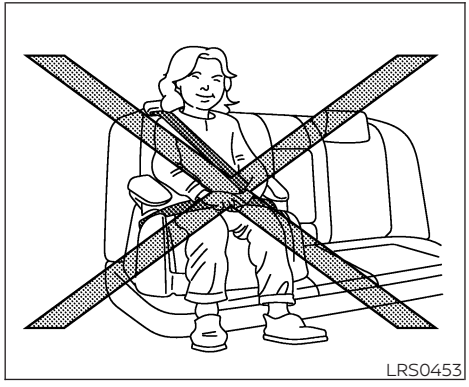
LRS0453

LRS0464

Booster seats of various sizes are offered by several manufacturers. When selecting any booster seat, keep the following points in mind:

- Choose only a booster seat with a label certifying that it complies with Federal Motor Vehicle Safety Standard 213 or Canadian Motor Vehicle Safety Standard 213.
- Check the booster seat in your vehicle to be sure it is compatible with the vehicle's seat and seat belt system.
- Make sure the child's head will be properly supported by the booster seat or vehicle seat. The seatback must be at or above the center of the child's ears. For example, if a low back booster seat is chosen, the vehicle seatback must be at or above the center of the child's ears. If the seatback is lower than the center of the child's ears, a high back booster seat should be used.
- If the booster seat is compatible with your vehicle, place the child in the booster seat and check the various adjustments to be sure the booster seat is compatible with the child. Always follow all recommended procedures.

All U.S. states and Canadian provinces or territories require that infants and small children be restrained in an approved child restraint at all times while the vehicle is being operated.

The instructions in this section apply to booster seat installation in the rear seats or the front passenger seat.

Booster seat installation

⚠ WARNING

To avoid injury to child, do not use the lap/shoulder belt in the Automatic Locking Retractor (ALR) mode when using a booster seat with the seat belts.

For additional information, see all Warnings and Cautions in "Child safety" (P. 29) and "Child restraints" (P. 32) before installing a child restraint.

Follow these steps to install a booster seat in the rear bench seats or in the front passenger seat:

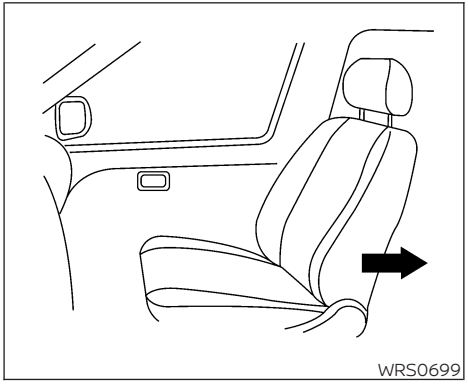

Forward-facing (front passenger seat) – step 1

1. **If you must install a booster seat in the front seat, move the seat to the rearmost position.**
2. Position the booster seat on the seat. Only place it in a front-facing direction. Always follow the booster seat manufacturer's instructions.

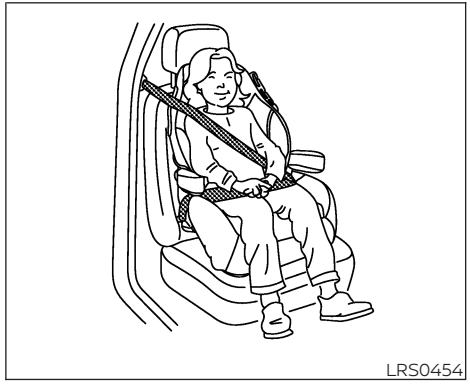

Front passenger position

Rear center position

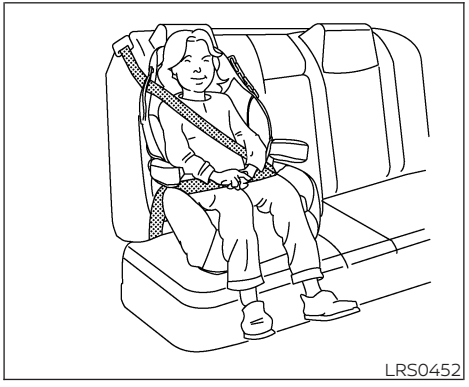

Rear outboard position

3. The booster seat should be positioned on the vehicle seat so that it is stable.

   If necessary, adjust or remove the head restraint/headrest to obtain the correct booster seat fit. If the head restraint/headrest is removed, store it in a secure place. **Be sure to reinstall the head restraint/headrest when the booster seat is removed.** For additional information, see "Head restraints/headrests" (P. 17).

   If the seating position does not have an adjustable head restraint/headrest and it is interfering with the proper booster seat fit, try another seating position or a different booster seat.

4. Position the lap portion of the seat belt low and snug on the child's hips. Be sure to follow the booster seat manufacturer's instructions for adjusting the seat belt routing.

5. Pull the shoulder belt portion of the seat belt toward the retractor to take up extra slack. Be sure the shoulder belt is positioned across the top, middle portion of the child's shoulder. Be sure to follow the booster seat manufacturer's instructions for adjusting the seat belt routing.

6. Follow the warnings, cautions and instructions for properly fastening a seat belt shown in "Three-point type seat belt with retractor" (P. 24).

LRS0865

7. If the booster seat is installed in the front passenger seat, place the ignition switch in the ON position. The front passenger air bag status light may or may not illuminate, depending on the size of the child and the type of booster seat being used. For additional information, see "Front passenger air bag and status light" (P. 64).

PRECAUTIONS ON SRS

Basic Information

This SRS section contains important information concerning the following systems:

- Driver and front passenger supplemental front-impact air bag (NISSAN Advanced Air Bag System)
- Front seat-mounted side-impact supplemental air bag
- Rear outboard seat-mounted side-impact supplemental air bag
- Front central seat-mounted side-impact supplemental air bag (if so equipped)
- Roof-mounted curtain side-impact and rollover supplemental air bag
- Driver and front passenger supplemental knee air bags
- Seat belt with pretensioner(s) (front and rear outboard seats)

Supplemental front-impact air bag system

The NISSAN Advanced Air Bag System can help cushion the impact force to the head and chest of the driver and front passenger in certain frontal collisions.

Front seat-mounted side-impact supplemental air bag system

This system can help cushion the impact force to the chest area of the driver and front passenger in certain side-impact collisions. The side air bags are designed to inflate on the side where the vehicle is impacted.

Rear outboard seat-mounted side-impact supplemental air bag system

This system can help cushion the impact force to the chest area of the rear outboard seat passengers in certain side-impact collisions. The side air bags are designed to inflate on the side where the vehicle is impacted.

Front central seat-mounted side-impact supplemental air bag (if so equipped)

This system can help cushion the impact force to the head area of the driver and front passenger in certain side-impact and rollover collisions. In a side-impact, this air bag is designed to inflate during a vehicle impact from either side.

Roof-mounted curtain side-impact and rollover supplemental air bag system

This system can help cushion the impact force to the head of occupants in front and rear outboard seating positions in certain side-impact collisions. The curtain air bags are designed to inflate on the side where the vehicle is impacted. In a rollover, the curtain air bags are designed to inflate and remain inflated for a short time.

Driver and front passenger supplemental knee air bags

This system can help cushion the impact force to the driver's and front passenger's knees in certain collisions.

The SRS is designed to **supplement** the crash protection provided by the driver and front passenger and rear outboard seat belts and is **not a substitute** for them. Seat belts should always be correctly worn and the occupant seated a suitable distance away from the steering wheel, instrument panel and door finishers. For additional information, see "Seat belts" (P. 21).

The supplemental air bags operate only when the ignition switch is placed in the ON position.

After placing the ignition switch in the ON position, the supplemental air bag warning light illuminates. The supplemental air bag warning light will turn off after about 7 seconds if the system is operational.

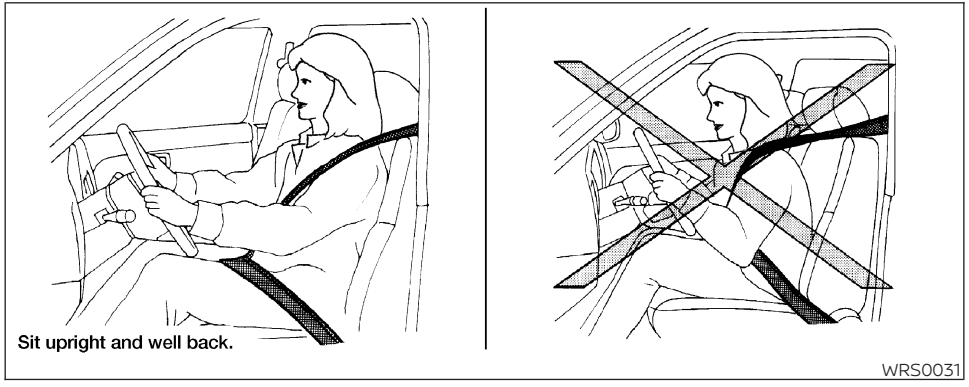

⚠ WARNING

- **The front air bags ordinarily will not inflate in the event of a side impact, rear impact, rollover, or lower severity frontal collision. Always wear your seat belts to help reduce the risk or severity of injury in various kinds of accidents**
- **The front passenger air bag and front passenger supplemental knee air bag will not inflate if the passenger air bag status light is lit. For additional information, see "Front passenger air bag and status light" (P. 64).**
- **The seat belts and the front air bags are most effective when you are sitting well back and upright in the seat. The front air bags inflate with great force. Even with the NISSAN Advanced Air Bag System, if you are unrestrained, leaning forward, sitting sideways or out of position in any way, you are at greater risk of injury or death in a crash. You may also receive serious or fatal injuries from the front air bag if you are up against it when it inflates. Always sit back against the seatback and as far away as practical from the steering wheel or instrument panel. Always properly use the seat belts.**
- **The driver and front passenger seat belt buckles are equipped with sensors that detect if the seat belts are fastened. The NISSAN Advanced Air Bag System monitors the severity of a collision and seat belt usage, then inflates the air bags as needed. Failure to properly wear seat belts can increase the risk or severity of injury in an accident.**
- **The front passenger seat is equipped with an occupant classification sensor (weight sensor) that turns the front passenger air bag and front passenger supplemental knee air bag OFF under some conditions. This sensor is only used in this seat. Failure to be properly seated and wearing the seat belt can increase the risk or severity of injury in an accident. For additional information, see "Front passenger air bag and status light" (P. 64).**
- **Keep hands on the outside of the steering wheel. Placing them inside the steering wheel rim could increase the risk that they are injured when the front air bag inflates.**

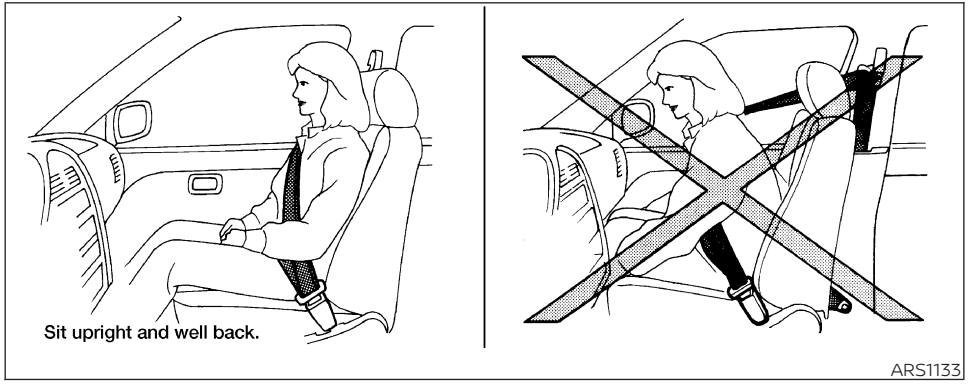

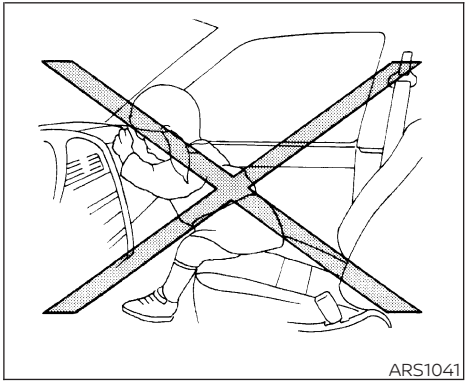

⚠ WARNING

- **Never let children ride unrestrained or extend their hands or face out of the window. Do not attempt to hold them in your lap or arms. Some examples of dangerous riding positions are shown in the illustrations.**

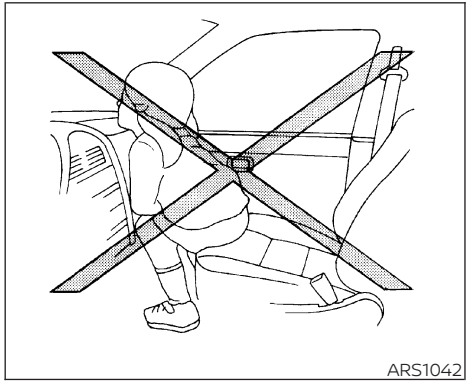
ARS1042

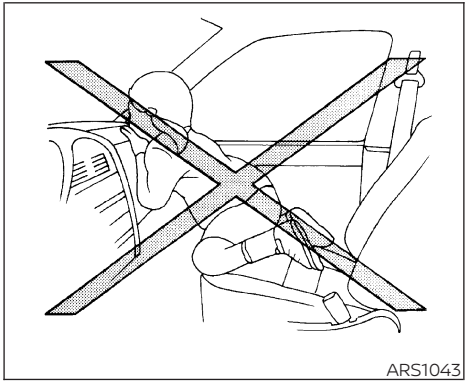
ARS1043

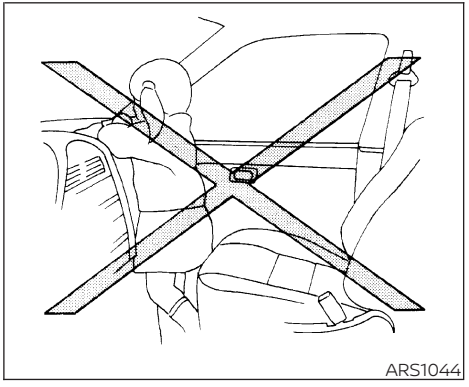
ARS1044

⚠ WARNING

- **Children may be severely injured or killed when the front air bags, side air bags or curtain air bags inflate if they are not properly restrained. Preteens and children should be properly restrained in the rear seat, if possible.**

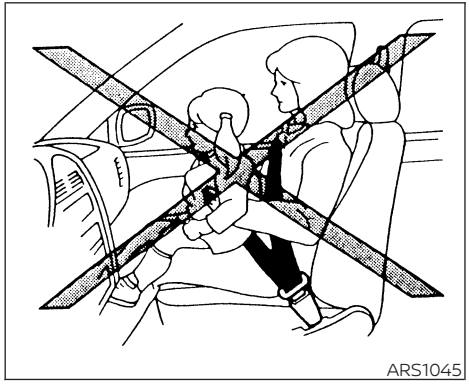

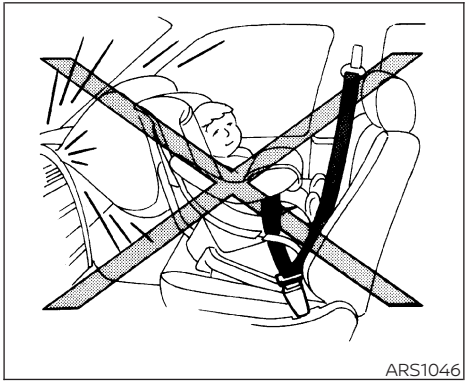

WARNING

- **Even with the NISSAN Advanced Air Bag System, never install a rear-facing child restraint in the front seat. An inflating front air bag could seriously injure or kill your child. For additional information, see "Child restraints" (P. 32).**

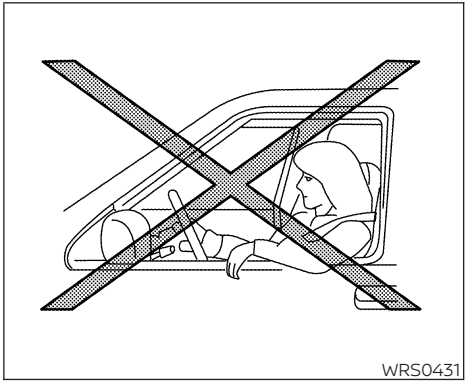

WARNING

Front, front central and rear outboard seat-mounted side-impact supplemental air bags and roof-mounted curtain side-impact and rollover supplemental air bags:

- **The side air bags and curtain air bags ordinarily will not inflate in the event of a frontal impact, rear impact, or lower severity side collision. Always wear your seat belts to help reduce the risk or severity of injury in various kinds of accidents.**

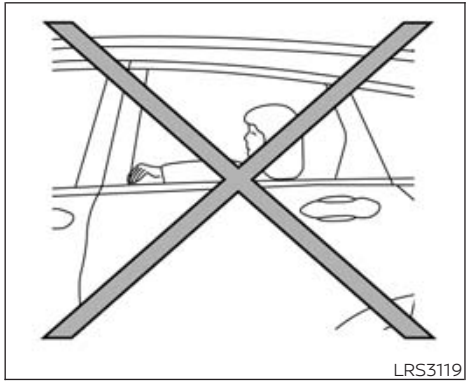

⚠ WARNING

- **The seat belts, the side air bags and curtain air bags are most effective when you are sitting well back and upright in the seat with both feet on the floor. The side air bag and curtain air bag inflate with great force. Do not allow anyone to place their hand, leg or face near the side air bag on the side of the seatback of the front and rear seat or near the side roof rails. Do not allow anyone sitting in the front seats or rear outboard seats to extend their hand out of the window or lean against the door. Some examples of dangerous riding positions are shown in the previous illustrations.**

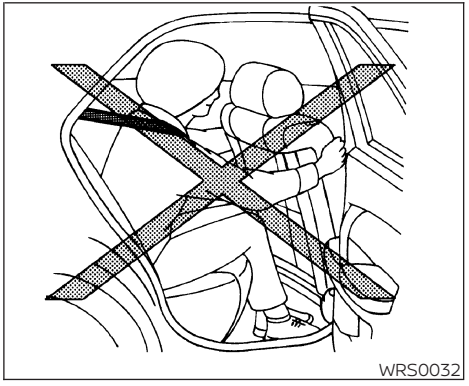

⚠ WARNING

- **When sitting in the rear seat, do not hold onto the seatback of the front seat. If the side air bag inflates, you may be seriously injured. Be especially careful with children, who should always be properly restrained. Some examples of dangerous riding positions are shown in the illustrations.**
- **Do not use seat covers on the front or rear seatbacks. They may interfere with side air bag inflation.**

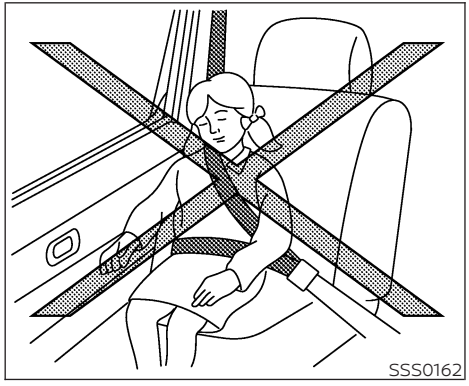
SSS0162

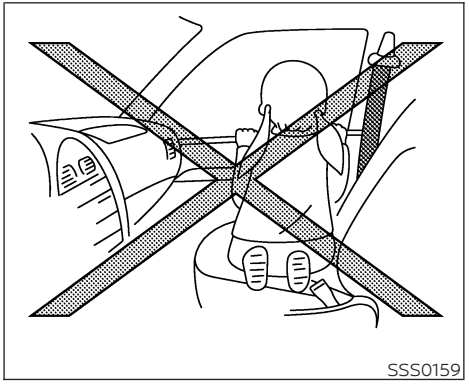
SSS0159

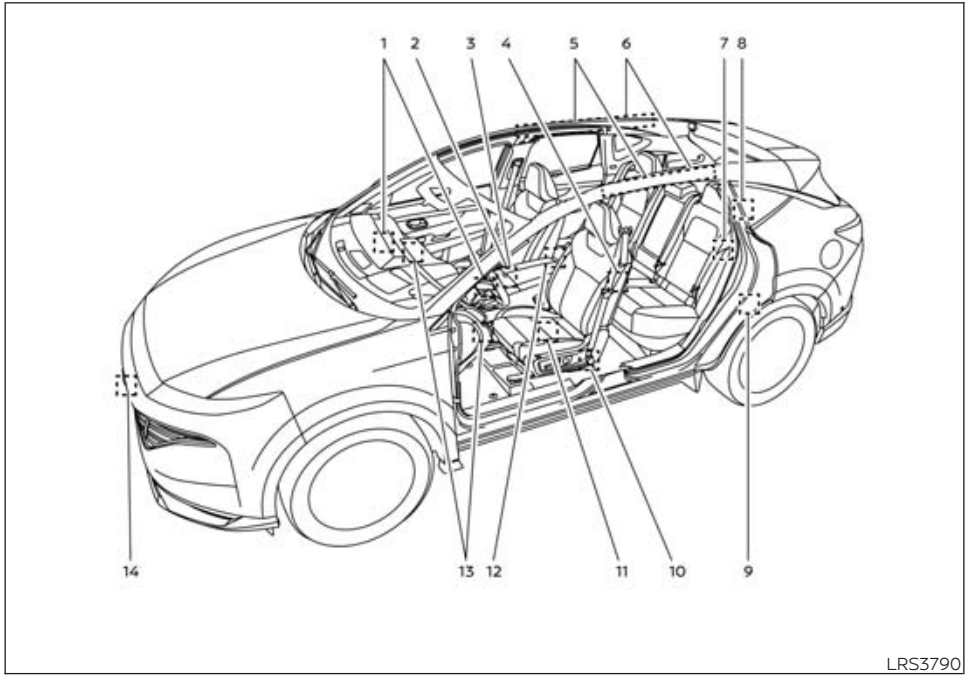

NISSAN Advanced Air Bag System (front seats)

Basic Information

1. Supplemental front-impact air bag modules
2. Air bag Control Unit (ACU)
3. Occupant classification sensors (2) (weight sensors — located on passenger seat frame)
4. Front seat-mounted side-impact supplemental air bag modules (driver's side shown; passenger side similar)
5. Roof-mounted curtain side-impact and rollover supplemental air bags
6. Roof-mounted curtain side-impact and rollover supplemental air bag inflators
7. Rear outboard seat-mounted side-impact supplemental air bag modules
8. Seat belt with pretensioner(s) (rear outboard seats)
9. Satellite sensors (driver's side shown; passenger side similar)
10. Seat belt with pretensioner(s) (front seats)
11. Pressure sensors in door (driver's side shown; front passenger side similar)
12. Front central seat-mounted side-impact supplemental air bag (if so equipped)

13. Driver and front passenger supplemental knee air bags
14. Crash zone sensor

⚠ WARNING

To ensure proper operation of the passenger's NISSAN Advanced Air Bag System, please observe the following items.

- **Do not allow a passenger in the rear bench seats to push or pull on the seatback pocket.**
- **Do not place heavy loads heavier than 9 lbs. (4 kg) on the seatback, head restraint/headrest or in the seatback pocket.**
- **Make sure that there is nothing pressing against the rear of the seatback, such as a child restraint installed in the rear seat or an object stored on the floor.**
- **Make sure that there is no object placed under the front passenger seat.**
- **Make sure that there is no object placed between the seat cushion and center console or between the seat cushion and the door.**
- **If a forward-facing child restraint is installed in the front passenger seat, do not position the front passenger seat so the child restraint contacts the instrument panel. If the child restraint does contact the instrument panel, the system may determine the seat is occupied and the passenger air bag and front passenger supplemental knee air bag may deploy in a collision. Also the front passenger air bag status light may not illuminate. For additional information, see "Child restraints" (P. 32).**
- **Confirm the operating condition with the front passenger air bag status light.**
- **If you notice that the front passenger air bag status light is not operating as described in this section, get the occupant classification system checked. It is recommended that you visit a NISSAN dealer for this service.**
- **Until you have confirmed with a dealer that your passenger seat occupant classification system is working properly, position the occupants in the rear seating positions.**
- **Do not position the front passenger seat so it contacts the rear seat. If the front seat does contact the rear seat, the air bag system may determine a sensor malfunction has occurred and the front passenger air bag status light may illuminate and the supplemental air bag warning light may flash.**

This vehicle is equipped with the NISSAN Advanced Air Bag System for the driver and front passenger seats. This system is designed to meet certification requirements under U.S. regulations. It is also permitted in Canada. **All of the information, cautions and warnings in this manual still apply and must be followed.**

The driver supplemental front-impact air bag is located in the center of the steering wheel. The front passenger supplemental front-impact air bag is mounted in the dashboard above the glove box. The front air bags are designed to inflate in higher severity frontal collisions, although they may inflate if the forces in another type of collision are similar to those of a higher severity frontal impact. They may not inflate in certain frontal collisions. Vehicle

damage (or lack of it) is not always an indication of proper front air bag system operation.

The NISSAN Advanced Air Bag System monitors information from the crash zone sensor, the Air bag Control Unit (ACU), seat belt buckle sensors and occupation classification sensor (weight sensor). Inflator operation is based on the severity of a collision and seat belt usage for the driver. For the front passenger, the occupant classification sensor is also monitored. Based on information from the sensor, only one front air bag may inflate in a crash, depending on the crash severity and whether the front occupants are belted or unbelted. Additionally, the front passenger air bag and front passenger supplemental knee air bag may be automatically turned off under some conditions, depending on the weight detected on the front passenger seat and how the seat belt is used. If the front passenger air bag and front passenger supplemental knee air bag are OFF, the front passenger air bag status light will be illuminated. For additional information, see "Front passenger air bag and status light" (P. 64). One front air bag inflating does not indicate improper performance of the system.

If you have any questions about your air bag system, it is recommended that you visit a NISSAN dealer to obtain information about the system. If you are considering modification of your vehicle due to a disability, you may also contact NISSAN. Contact information is contained in the front of this Owner's Manual.

When a front air bag inflates, a fairly loud noise may be heard, followed by the release of smoke. This smoke is not harmful and does not indicate a fire. Care should be taken to not inhale it, as it may cause irritation and choking. Those with a history of a breathing condition should get fresh air promptly.

Front air bags, along with the use of seat belts, help to cushion the impact force on the face and chest of the front occupants. They can help save lives and reduce serious injuries. However, an inflating front air bag may cause facial abrasions or other injuries. Front air bags, other than the driver's knee air bag and front passenger supplemental knee air bag, do not provide restraint to the lower body.

Even with NISSAN Advanced Air Bags, seat belts should be correctly worn and the driver and front passenger seated upright as far as practical away from the steering wheel or instrument panel. The front air bags inflate quickly in order to help protect the front occupants. Because of this, the force of the front air bag inflating can increase the risk of injury if the occupant is too close to, or is against, the front air bag module during inflation.

The front air bags deflate quickly after a collision.

The front air bags operate only when the ignition switch is in the ON position.

After placing the ignition switch in the ON position, the supplemental air bag warning light illuminates. The supplemental air bag warning light will turn off after about 7 seconds if the system is operational.

Front passenger air bag and status light

⚠ WARNING

The front passenger air bag and front passenger supplemental knee air bag are designed to automatically turn OFF under some conditions. Read this section carefully to learn how it operates. Proper use of the seat, seat belt, and child restraints is necessary for most effective protection. Failure to follow all instructions in this manual concerning the use of seats, seat belts, nd child restraints can increase the risk or severity of injury in an accident.

Status light

The front passenger seat is equipped with an occupant classification sensor (weight sensor) that turns the front passenger air bag and front passenger supplemental knee air bag on or off depending on the weight applied to the front passenger seat. The status of the front passenger air bag and front passenger supplemental knee air bag (ON or OFF) is indicated by the front passenger air bag status light which is located on the instrument panel.

After the ignition switch is placed in the "ON" position, the front passenger air bag status light on the instrument panel illuminates for about 7 seconds and then turns off or remains illuminated depending on the front passenger seat occupied status. The light operates as follows:

Condition: Empty front passenger seat

- Passenger Air Bag Status Light : ON (illuminated)
- Front Passenger Air Bag and Front Passenger Supplemental Knee Air Bag Status: INHIBITED

Condition: Bag or Child or Child Restraint or Small Adult in front passenger seat

- Passenger Air Bag Status Light : ON (illuminated) or OFF (dark)
- Front Passenger Air Bag and Front Passenger Supplemental Knee Air Bag Status: INHIBITED or ACTIVATED

Condition: Adult in the front passenger seat

- Passenger Air Bag Status Light : OFF (dark)
- Front Passenger Air Bag and Front Passenger Supplemental Knee Air Bag Status: ACTIVATED

In addition to the above, certain objects placed on the front passenger seat may also cause the light to operate as described above depending on their weight.

For additional information, see "Normal operation" (P. 66) and "Troubleshooting" (P. 67).

Front passenger air bag

The front passenger air bag and front passenger supplemental knee air bag are designed to automatically turn OFF when the vehicle is operated under some conditions as described below in accordance with U.S. regulations. If the front passenger air bag and front passenger supplemental knee

air bag are OFF, they will not inflate in a crash. The driver air bag and other air bags in your vehicle are not part of this system.

The purpose of the regulation is to help reduce the risk of injury or death from an inflating air bag to certain front passenger seat occupants, such as children, by requiring the air bags to be automatically turned OFF. Certain sensors are used to meet the requirements.

The occupant classification sensor in this vehicle is a weight sensor. It is designed to detect an occupant and objects on the seat by weight. For example,

- If a child is in the front passenger seat, the Advanced Air Bag System is designed to turn the front passenger air bag and front passenger supplemental knee air bag OFF.
- If a child in a child restraint of a larger size and weight is in the front passenger seat, the Advanced Air Bag System may turn the passenger air bag ON.

Front passenger seat adult occupants who are properly seated and using the seat belt as outlined in this manual should not cause the front passenger air bag and front passenger supplemental knee air bag to be automatically turned OFF. For small adults it may be turned OFF, however, if the occupant takes his/her weight off the seat cushion (for example, by not sitting upright, by sitting on an edge of the seat, or by otherwise being out of position), this could cause the sensor to turn the air bags OFF. Always be sure to be seated and wearing the seat belt properly for the most effective protection by the seat belt and supplemental air bag.

NISSAN recommends that pre-teens and children be properly restrained in a rear seat. NISSAN also recommends that appropriate child restraints and booster seats be properly installed in a rear seat.

If this is not possible, the occupant classification sensor is designed to operate as described above to turn the front passenger air bag and front passenger supplemental knee air bag OFF, or ON for a child in a child restraint of a larger size and weight..

Failing to properly secure child restraints and to use the ALR mode (child restraint mode) may allow the restraint to tip or move. In an accident, this can also result in the front passenger air bag and front passenger supplemental knee air bag inflating in a crash instead of being OFF. For additional information, see "Child restraints" (P. 32).

If the front passenger seat is not occupied, the front passenger air bag and front passenger supplemental knee air bag are designed not to inflate in a crash. However, heavy objects placed on the seat could result in air bag inflation, because of the object's weight detected by the occupant classification sensor. Other conditions could also result in air bag inflation, such as if a child is standing on the seat, or if two children are on the seat, contrary to the instructions in this manual. Always be sure that you and all vehicle occupants are seated and restrained properly.

Using the front passenger air bag status light, you can monitor when the front passenger air bag and front passenger supplemental knee air bag are automatically turned OFF.

If an adult occupant is in the seat but the front passenger air bag status light is illuminated (indicating that the front passenger air bag and front passenger supplemental knee air bag are OFF), it could be that the person is a small adult, or is not sitting on the seat properly or not using the seat belt properly.

If a child restraint must be used in the front seat, the front passenger air bag status light may or may not be illuminated, depending on the size of the child and the type of child restraint being used. If the front passenger air bag status light is not illuminated (indicating that the front passenger air bag and front passenger supplemental knee air bag might inflate in a crash), it could be that the child restraint or seat belt is not being used properly. Make sure that the child restraint is installed properly, the seat belt is used properly and the occupant is positioned properly. If the front passenger air bag status light is still not illuminated, reposition the occupant or child restraint in a rear seat.

If the front passenger air bag status light will not illuminate even though you believe that the child restraint, the seat belts and the occupant are properly positioned, it is recommended that you take your vehicle to a NISSAN dealer. A NISSAN dealer can check system status by using a special tool. However, until you have confirmed with a dealer that your air bag is working properly, reposition the occupant or child restraint in a rear seat.

The NISSAN Advanced Air Bag System and front passenger air bag status light will take a few seconds to register a change in the front passenger seat status. This is normal system operation and does not indicate a malfunction.

If a malfunction occurs in the front passenger air bag system, the supplemental air bag warning light , located in the meter and gauges area of the instrument panel, will be illuminated (blinking or steadily lit). Have the system checked. It is recommended that you visit a NISSAN dealer for this service.

Normal operation

In order for the occupant classification sensor system to classify the front passenger based on weight, please follow the precautions and steps outlined below:

Precautions

- Make sure that there are no objects weighing over 9 lbs. (4 kg) hanging on the seat or placed in the seatback pocket.
- Make sure that a child restraint or other object is not pressing against the rear of the seatback.
- Make sure that a rear passenger is not pushing or pulling on the back of the front passenger seat.
- Make sure that the front passenger seat or seatback is not forced back against an object on the seat or floor behind it.
- Make sure that there is no object placed under the front passenger seat.

Steps

1. Adjust the seat as outlined in the "Seats" (P. 12) section of this manual. Sit upright, leaning against the seatback, and centered on the seat cushion with your feet comfortably extended to the floor.
2. Make sure there are no objects on your lap.
3. Fasten the seat belt as outlined in the "Seat belts" (P. 21) section of this manual. Front passenger seat belt buckle status is monitored by the occupant classification system, and is used as an input to determine occupancy status. So, it is highly recommended that the front passenger fasten their seat belt.
4. Remain in this position for 30 seconds allowing the system to classify the front passenger before the vehicle is put into motion.
5. Ensure proper classification by checking the front passenger air bag status light.

NOTE:

This vehicle's occupant classification sensor system generally keeps the classification locked during driving, so it is important that you confirm that the front passenger is properly classified prior to driving. However, the occupant classification sensor may recalculate the weight of the occupant under some conditions (both while driving and when stopped), so front passenger seat occupants should continue to remain seated as outlined above.

Troubleshooting

If you think the front passenger air bag status light is incorrect:

1. If the light is ON with an adult occupying the front passenger seat:
   - Occupant is a small adult — the air bag light is functioning as intended. The front passenger air bag and front passenger supplemental knee air bag are suppressed.

     However, if the occupant is not a small adult, then this may be due to the following conditions that may be interfering with the weight sensors:
   - Occupant is not sitting upright, leaning against the seatback, and centered on the seat cushion with his/her feet comfortably extended to the floor.
   - A child restraint or other object pressing against the rear of the seatback.
   - A rear passenger pushing or pulling on the back of the front passenger seat.
   - Forcing the front seat or seatback against an object on the seat or floor behind it.
   - An object placed under the front passenger seat.
   - An object placed between the seat cushion and center console or between the seat cushion and the door.

   If the vehicle is moving, please come to a stop when it is safe to do so. Check and correct any of the above conditions. Restart the vehicle and wait 1 minute.

   NOTE:
   A system check will be performed during which the front passenger air bag status light will remain lit for about 7 seconds initially.

   If the light is still ON after this, the person should be advised not to ride in the front passenger seat and the vehicle should be checked as soon as possible. It is recommended that you visit a NISSAN dealer for this service.
2. If the light is OFF with a small adult, child or child restraint occupying the front passenger seat.

   This may be due to the following conditions that may be interfering with the weight sensors:
   - Small adult or child is not sitting upright, leaning against the seatback, and centered on the seat cushion with his/her feet comfortably extended to the floor.
   - The child restraint is not properly installed, as outlined in the "Child restraints" section of this manual.
   - An object weighing over 9 lbs. (4 kg) hanging on the seat or placed in the seatback pocket.
   - A child restraint or other object pressing against the rear of the seatback.
   - A rear passenger pushing or pulling on the back of the front passenger seat.
   - Forcing the front seat or seatback against an object on the seat or floor behind it.

- An object placed under the front passenger seat.
- An object placed between the seat cushion and center console.

If the vehicle is moving, please come to a stop when it is safe to do so. Check and correct any of the above conditions. Restart the vehicle and wait 1 minute.

NOTE:
A system check will be performed during which the front passenger air bag status light will remain lit for about 7 seconds initially.

If the light is still OFF after this, the small adult, child or child restraint should be repositioned in the rear seat and the vehicle should be checked as soon as possible. It is recommended that you visit a NISSAN dealer for this service.

3. If the light is OFF with no front passenger and no objects on the front passenger seat, the vehicle should be checked. It is recommended that you visit a NISSAN dealer as soon as possible.

Other supplemental front-impact air bag precautions

⚠ WARNING

- **Do not place any objects on the steering wheel pad or on the instrument panel. Also, do not place any objects between any occupant and the steering wheel or instrument panel. Such objects may become dangerous projectiles and cause injury if the front air bags inflate.**
- **Immediately after inflation, several front air bag system components will be hot. Do not touch them; you may severely burn yourself.**
- **No unauthorized changes should be made to any components or wiring of the supplemental air bag system. This is to prevent accidental inflation of the supplemental air bag or damage to the supplemental air bag system.**
- **Do not make unauthorized changes to your vehicle's electrical system, suspension system or front end structure. This could affect proper operation of the front air bag system.**
- **Tampering with the front air bag system may result in serious personal injury. Tampering includes changes to the steering wheel and the instrument panel assembly by placing material over the steering wheel pad and above the instrument panel or by installing additional trim material around the air bag system.**
- **Removing or modifying the front passenger seat may affect the function of the air bag system and result in serious personal injury.**
- **Modifying or tampering with the front passenger seat may result in serious personal injury. For example, do not change the front seats by placing material on the seat cushion or by installing additional trim material, such as seat covers, on the seat that are not specifically designed to assure proper air bag operation. Additionally, do not stow any objects under the front passenger seat or the seat cushion and seatback. Such objects may interfere with the proper operation of the occupant classification sensor (weight sensor).**

- **No unauthorized changes should be made to any components or wiring of the seat belt system. This may affect the front air bag system. Tampering with the seat belt system may result in serious personal injury.**
- **It is recommended that you visit a NISSAN dealer for work on and around the front air bag. It is also recommended that you visit a NISSAN dealer for installation of electrical equipment. The Supplemental Restraint System (SRS) wiring harnesses* should not be modified or disconnected. Unauthorized electrical test equipment and probing devices should not be used on the air bag system.**
- **A cracked windshield should be replaced immediately by a qualified repair facility. A cracked windshield could affect the function of the supplemental air bag system.**

***The SRS wiring harness connectors are yellow and orange for easy identification.**

When selling your vehicle, we request that you inform the buyer about the front air bag system and guide the buyer to the appropriate sections in this Owner's Manual.

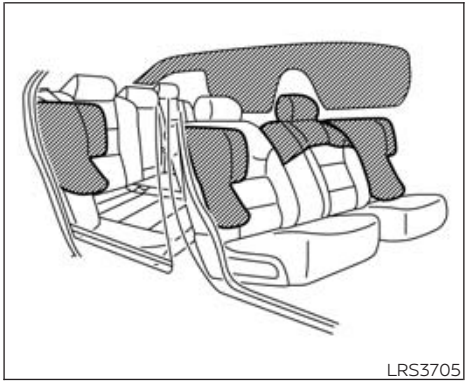

Front, rear outboard, and front central (if so equipped) seat-mounted side-impact supplemental air bag and roof-mounted curtain side-impact and rollover supplemental air bag systems

The side air bags are located in the outside of the seatback of the front and rear outboard seats. The front central air bag (if so equipped) is located in the inside of the seatback of the driver's seat. The curtain air bags are located in the side roof rails. **All of the information, cautions and warnings in this manual must be followed.** The side air bags and curtain air bags are designed to inflate in higher severity side collisions, although they may inflate if the forces in another type of collision are similar to those of a higher severity impact. They are designed to inflate on the side where the vehicle is impacted. They may not inflate in certain side collisions.

Curtain air bags are also designed to inflate in certain types of rollover collisions or near rollovers. As a result, certain vehicle movements (for example, during severe off-roading) may cause the curtain air bags to inflate.

Vehicle damage (or lack of it) is not always an indication of proper side air bag and curtain air bag operation.

When the side air bags and curtain air bags inflate, a fairly loud noise may be heard, followed by the release of smoke. This smoke is not harmful and does not indicate a fire. Care should be taken not to inhale it, as it may cause irritation and choking. Those with a history of a breathing condition should get fresh air promptly.

Side air bags, along with the use of seat belts, help to cushion the impact force on the chest and pelvic area of the front and

rear outboard occupants. The front central side air bag, along with the use of seat belts helps cushion the impact force on the head area of the front occupants. Curtain air bags help to cushion the impact force to the head of occupants in the front and rear outboard seating positions. They can help save lives and reduce serious injuries. However, an inflating side air bag and curtain air bag may cause abrasions or other injuries. Side air bags and curtain air bags do not provide restraint to the lower body.

The seat belts should be correctly worn and the driver, front passenger and rear outboard occupants seated upright as far as practical away from the side air bag. Rear seat passengers should be seated as far away as practical from the door finishers and side roof rails. The side air bags and curtain air bags inflate quickly in order to help protect the occupants. Because of this, the force of the side air bag and curtain air bag inflating can increase the risk of injury if the occupant is too close to, or is against, these air bag modules during inflation. The side air bag will deflate quickly after the collision is over. The front central side air bag and curtain air bags will remain inflated for a short period of time.

The curtain air bag will remain inflated for a short time.

The side air bags and curtain air bags operate only when the ignition switch is placed in the ON position.

After placing the ignition switch in the ON position, the supplemental air bag warning light illuminates. The supplemental air bag warning light will turn off after about 7 seconds if the system is operational.

⚠ WARNING

- **Do not place any objects near the seatback of the front and rear seats. Also, do not place any objects (an umbrella, bag, etc.) between the front and rear door finisher and the front and rear seat. Such objects may become dangerous projectiles and cause injury if a side air bag inflate.**
- **Right after inflation, several side air bag and curtain air bag system components will be hot. Do not touch them; you may severely burn yourself.**
- **No unauthorized changes should be made to any components or wiring of the side air bag and curtain air bag systems. This is to prevent damage to or accidental inflation of the side air bag and curtain air bag or damage to the side air bag and curtain air bag systems.**
- **Do not make unauthorized changes to your vehicle's electrical system, suspension system or side panel. This could affect proper operation of the side air bag and curtain air bag systems.**
- **Tampering with the side air bag system may result in serious personal injury. For example, do not change the front and rear seats by placing material near the seatbacks or by installing additional trim material, such as seat covers, around the side air bag.**

- **It is recommended that you visit a NISSAN dealer for work on and around the side air bag and curtain air bag. It is also recommended that you visit a NISSAN dealer for installation of electrical equipment. The SRS wiring harnesses* should not be modified or disconnected. Unauthorized electrical test equipment and probing devices should not be used on the side air bag or curtain air bag system.**

*** The SRS wiring harness connectors are yellow and orange for easy identification.**

When selling your vehicle, we request that you inform the buyer about the side air bag and curtain air bag systems and guide the buyer to the appropriate sections in this Owner's Manual.

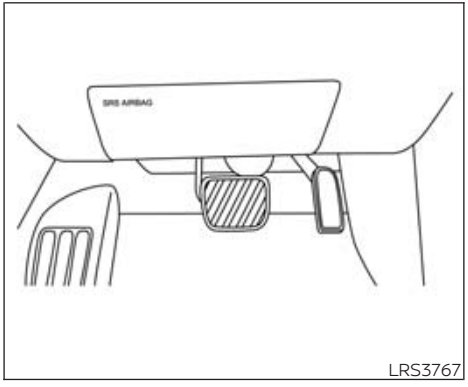

LRS3767

Driver's side

Driver and front passenger supplemental knee air bag

LRS3250

Front passenger's side

The knee air bag is located in the knee bolster, on the driver's and front passenger's side. **All of the information, cautions and warnings in this manual apply and must be followed.** The knee air bag is designed to inflate in higher severity frontal collisions, although it may inflate if the forces in another type of collision are similar to those of a higher severity frontal impact. It may not inflate in certain collisions.

Vehicle damage (or lack of it) is not always an indication of proper knee air bag operation.

When the knee air bag inflates, a fairly loud noise may be heard, followed by release of smoke. This smoke is not harmful and does not indicate a fire. Care should be taken not to inhale it, as it may cause irritation and choking. Those with a history of a breathing condition should get fresh air promptly.

The knee air bag helps to cushion the impact force on the knees of the driver and passenger. It can help reduce serious injuries. However, an inflating knee air bag may cause abrasions or other injuries. The knee air bag provides restraint to the lower body.

The knee air bag inflates quickly in order to help protect the occupants. Because of this, the force of the knee air bag inflating can increase the risk of injury if the occupant is too close to, or is against, this air bag module during inflation. The knee air bag will deflate quickly after the collision is over OR the knee air bag will remain inflated for a short time.

The knee air bag operates only when the ignition switch is placed in the ON position.

After placing the ignition switch in the ON position, the supplemental air bag warning light illuminates. The supplemental air bag warning light will turn off after about 7 seconds if the system is operational.

⚠ WARNING

- **Do not place any objects between the knee bolster and the driver's or passenger's seat. Such objects may become dangerous projectiles and cause injury if a knee air bag inflates.**
- **Right after inflation, the knee air bag system components will be hot. Do not touch them; you may severely burn yourself.**
- **No unauthorized changes should be made to any components or wiring of the knee air bag system. This is to prevent damage to or accidental inflation of the knee air bag system.**
- **Do not make unauthorized changes to your vehicle's electrical system or suspension system. This could affect proper operation of the knee air bag system.**
- **Tampering with the knee air bag system may result in serious personal injury. For example, do not change the driver or passenger knee bolster or install additional trim material around the knee air bag.**
- **It is recommended that you visit a NISSAN dealer for work on and around the knee air bag. It is also recommended that you visit a NISSAN dealer for installation of electrical equipment. The SRS wiring harnesses* should not be modified or disconnected. Unauthorized electrical test equipment and probing devices should not be used on the knee air bag system.**

***The SRS wiring harness or connectors are yellow or orange for easy identification.**

When selling your vehicle, we request that you inform the buyer about the knee air bag system and guide the buyer to the appropriate sections in this manual.

Seat belt with pretensioner(s) (front and rear outboard seats)

⚠ WARNING

- **The pretensioner(s) cannot be reused after activation. They must be replaced together with the retractor and buckle as a unit.**
- **If the vehicle becomes involved in a collision but pretensioner(s) are not activated, be sure to have the pretensioner system checked and, if necessary, replaced. It is recommended that you visit a NISSAN dealer for this service.**
- **No unauthorized changes should be made to any components or wiring of the pretensioner system. This is to prevent damage to or accidental activation of the pretensioner(s). Tampering with the pretensioner system may result in serious personal injury.**
- **It is recommended that you visit a NISSAN dealer for work on and around the pretensioner system. It is also recommended that you visit a NISSAN dealer for installation of electrical equipment. Unauthorized electrical test equipment and probing devices should not be used on the pretensioner system.**
- **If you need to dispose of the pretensioner(s) or scrap the vehicle, it is recommended that you visit a NISSAN dealer for this service. Incorrect disposal procedures could cause personal injury.**

The pretensioner system may activate with the supplemental air bag system in certain types of collisions. Working with the seat belt retractor, the pretensioner(s) help tighten the seat belt when the vehicle becomes involved in certain types of collisions, helping to restrain front and rear outboard seat occupants.

The pretensioner(s) are encased within the seat belt retractor and to the seat belt anchor affixed to the floor of the vehicle. These seat belts are used the same way as conventional seat belts.

When pretensioner(s) activate, smoke is released and a loud noise may be heard. This smoke is not harmful and does not indicate a fire. Care should be taken not to inhale it, as it may cause irritation and choking. Those with a history of a breathing condition should get fresh air promptly.

After the pretensioner(s') activation, load limiters allow the seat belt to release webbing (if necessary) to reduce forces against the chest.

The supplemental air bag warning light is used to indicate malfunctions in the pretensioner system. For additional information, see "Supplemental air bag warning light" (P. 74). If the operation of the supplemental air bag warning light indicates there is a malfunction, have the system checked. It is recommended that you visit a NISSAN dealer for this service.

When selling your vehicle, we request that you inform the buyer about the pretensioner system and guide the buyer to the appropriate sections in this Owner's Manual.

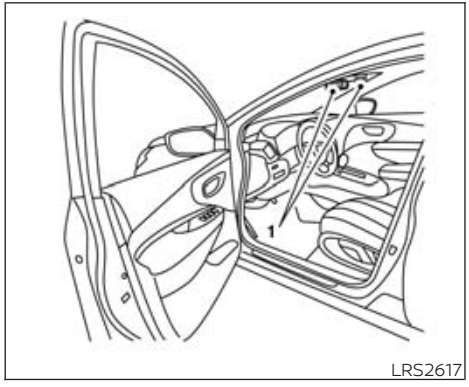

LRS2617

1. SRS Air bag warning labels

   The warning labels are located on the surface of the sun visor.

SUPPLEMENTAL AIR BAG WARNING LABELS

Warning labels about the supplemental front-impact air bag system are placed in the vehicle as shown in the illustration.

⚠ WARNING

Do not use a rear-facing child restraint on a seat protected by an air bag in front of it. If the air bag deploys, it may cause serious injury or death.

LRS0100

SUPPLEMENTAL AIR BAG WARNING LIGHT

Basic Information

The supplemental air bag warning light, displaying in the instrument panel, monitors the circuits for the air bag systems, pretensioner(s) and all related wiring.

When the ignition switch is placed in the ON position, the supplemental air bag warning light illuminates for about 7 seconds and then turns off. This means the system is operational.

If any of the following conditions occur, the front air bag, side air bag, curtain air bag and pretensioner systems need servicing:

- The supplemental air bag warning light remains on after approximately 7 seconds.
- The supplemental air bag warning light flashes intermittently.
- The supplemental air bag warning light does not come on at all.

Under these conditions, the front air bag, side air bag, curtain air bag or pretensioner systems may not operate properly. They must be checked and repaired. It is recommended that you visit a NISSAN dealer for this service.

⚠ WARNING

If the supplemental air bag warning light is on, it could mean that the front air bag, side air bag, curtain air bag and/or pretensioner systems will not operate in an accident. To help avoid injury to yourself or others, have your vehicle checked as soon as possible. It is recommended that you visit a NISSAN dealer for this service.

Repair and replacement procedure

The front air bags, side air bags, curtain air bags, knee air bags and pretensioner(s) are designed to inflate on a one-time-only basis. As a reminder, unless it is damaged, the supplemental air bag warning light remains illuminated after inflation has occurred. These systems should be repaired and/or replaced as soon as possible. It is recommended that you visit a NISSAN dealer for this service.

When maintenance work is required on the vehicle, the front air bags, side air bags, curtain air bags, knee air bags, pretensioner(s) and related parts should be pointed out to the person performing the maintenance. The ignition switch should always be in the LOCK position when working under the hood or inside the vehicle.

⚠ WARNING

- **Once a front air bag, side air bag, curtain air bag, or knee air bag has inflated, the air bag module will not function again and must be replaced. Additionally, the activated pretensioner(s) must also be replaced. The air bag module and pretensioner(s) should be replaced. It is recommended that you visit a NISSAN dealer for this service. However, the air bag module and pretensioner(s) cannot be repaired.**
- **The front air bag, side air bag, curtain air bag, knee air bag systems and the pretensioner system should be inspected if there is any damage to the front end or side portion of the vehicle. It is recommended that you visit a NISSAN dealer for this service.**
- **If you need to dispose of a supplemental air bag or pretensioner systems or scrap the vehicle, it is recommended that you visit a NISSAN dealer. Incorrect disposal procedures could cause personal injury.**
- **If there is an impact to your vehicle from any direction, your Occupant Classification Sensor (OCS) should be checked to verify it is still functioning correctly. It is recommended that you visit a NISSAN dealer for this service. The OCS should be checked even if no air bags deploy as a result of the impact. Failure to verify proper OCS function may result in an improper air bag deployment resulting in injury or death.**

MEMO

2 Instruments and controls

Instrument panel 80
Meters and gauges 82
Basic Information 82
Speedometer and odometer 82
Tachometer 84
Engine coolant temperature gauge 84
Fuel gauge 85
Distance To Empty (DTE) 86
Warning lights, indicator lights and audible reminders 86
Warning & Indicator Lights 86
Checking lights 87
Warning/Indicator lights (red) 87
Warning/Indicator lights (yellow) 90
Warning/Indicator lights (other) 95
Audible reminders 96
Vehicle information display 97
Basic Information 97
How to use the vehicle information display 97
Startup display 98
Trip computer 99
Changing the meter screen view 106
Oil control system 106
Settings 107
Vehicle information display warnings and indicators 116
Touch screen display 129
Basic Information 129
Vehicle 129
Security systems 130
Basic Information 130
Vehicle security system 130
NISSAN Vehicle Immobilizer System 131
Wiper and washer switch 132
Switch operation 132
Rain-sensing auto wiper system (if so equipped) 133
Rear switch operation 134
Rear window and outside mirror defroster switch 135
Windshield Deicer (if so equipped) 135
Headlight and turn signal switch 136
Headlight control switch 136
LED Daytime Running Lights (DRL) system 141
Front Decorative Light 141
Instrument brightness control 141
Turn signal switch 142
Horn 142

Climate controlled seat switches (if so equipped) 143
Heated seat switches 144
Heated rear seat switches (if so equipped) 145
Heated steering wheel switch (if so equipped) . . . 146
Steering Assist switch (for vehicles with ProPILOT Assist) 147
Seat massage switch (if so equipped) 147
Head Up Display (HUD) (if so equipped) 148
Basic Information 148
How to use the HUD 150
Driver Assistance/Navigation linking 151
Emergency call (SOS) button 152
Emergency support 152
Rear Door Alert 155
Power outlets 156
12v outlet 156
USB/iPod® charging ports 156
Magnetic Wireless charger 157
Basic Information 157
Extended storage switch (if so equipped) 159
Storage 160
Front-door pockets 160
Lower console storage tray (if so equipped) 160
Seatback pockets 160
Storage trays 161
Glove box 162
Console box 162
Overhead sunglasses storage 162
Cup holders 163
Cargo area storage bin 165
Luggage hooks 165
Roof rack 166
Windows 167
Power windows 167
Rear door sunshade (if so equipped) 170
Power moonroof (if so equipped) 171
Basic Information 171
Auto-reverse function (when closing or tilting down the moonroof) 171
Panoramic sunshade 173
Interior lights 174
Basic Information 174

Map lights 175
Personal lights 175
Luggage compartment light 175
HomeLink® Universal Transceiver (if so equipped) 176
Basic Information 176
Programming HomeLink® 176
Programming HomeLink® for Canadian customers and gate openers 178
Operating the HomeLink® Universal Transceiver 179
Programming trouble-shooting 179
Clearing the programmed information 179
Reprogramming a single HomeLink® button 180
If your vehicle is stolen 180

INSTRUMENT PANEL

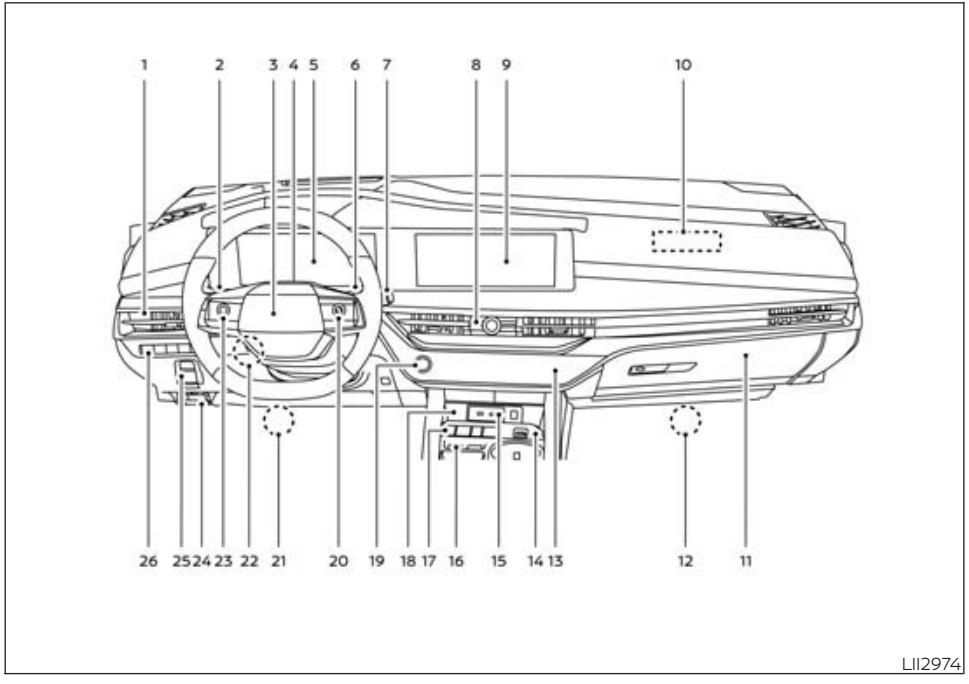

1. Vent (P. 254)
2. Headlight/turn signal switch (P. 136)
3. Supplemental air bag (P. 69)
   Horn (P. 142)
4. Driver monitor camera (if so equipped) (P. 383)
5. Meters and gauges (P. 82)
   Warning and indicator lights (P. 86)
   Vehicle information display (P. 97)
6. Paddle shifter (P. 290)
7. Wiper and washer switch (P. 132)
   Rear window wiper and washer switch (P. 134)
8. Hazard warning flasher switch (P. 456)
   Audio system/Center display controls*
9. Center display*
   Navigation display (if so equipped)*
10. Front passenger supplemental air bag (P. 69)
11. Glove box (P. 162)
12. Front passenger supplemental knee air bag (P. 71)
13. Heater and air conditioning controls (P. 255)
14. Drive Mode Selector (P. 297)
15. USB ports*

16. Idling Stop OFF switch (P. 451)
17. Shift switches (P. 286)
18. Magnetic Wireless charger (P. 157)
19. Push-button ignition switch (P. 279)
20. Bluetooth® Hands-Free Phone System/ Audio control switches*

    Control panel and vehicle information display switches (P. 97)
21. Driver supplemental knee air bag (P. 71)
22. Tilt and telescopic steering wheel control (P. 211)
23. ProPILOT Assist switches (P. 344)

    Volume control switches*
24. Hood release (P. 200)
25. Electronic parking brake (P. 292)

    Automatic brake hold switch (P. 294)
26. Steering Assist switch (P. 147)

    Head Up Display (HUD) switch (if so equipped) (P. 148)

    Heated steering wheel switch (if so equipped) (P. 146)

    Liftgate instrument panel switch (P. 201)

*: Refer to the separate NissanConnect® Owner's Manual.

Refer to the page number indicated in parentheses for operating details.

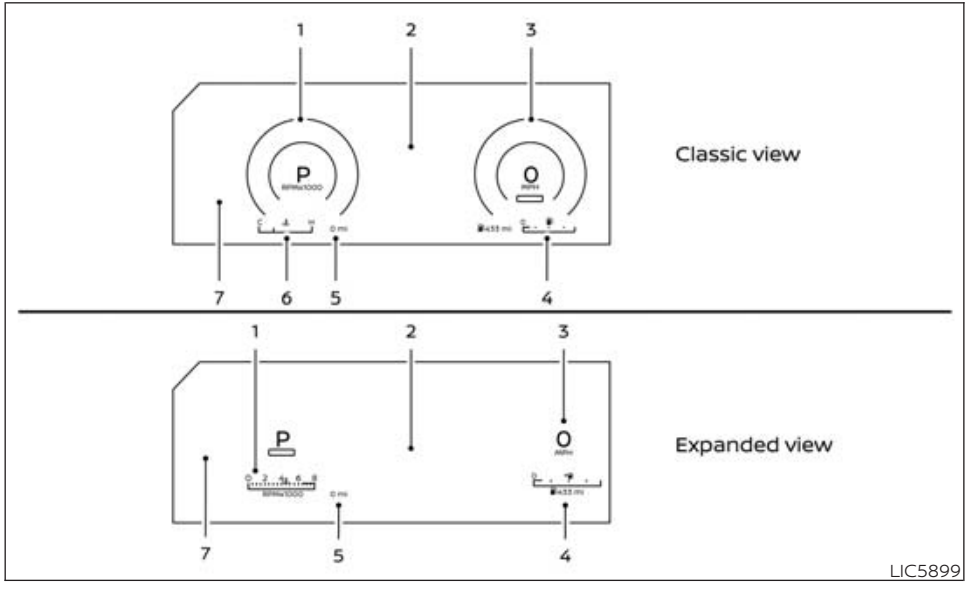

BASIC INFORMATION

1. Tachometer
2. Vehicle information display
3. Speedometer
4. Fuel gauge
5. Odometer
6. Engine coolant temperature gauge
7. Warning and indicator lights

SPEEDOMETER AND ODOMETER

Basic Information

This vehicle is equipped with a speedometer and odometer. The speedometer is located on the right side of the meter cluster. The odometer is located within the vehicle information display.

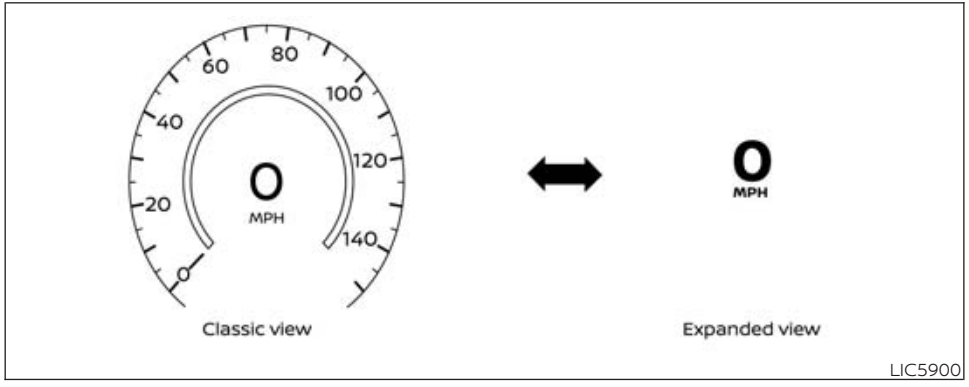

Speedometer

The speedometer indicates vehicle speed.

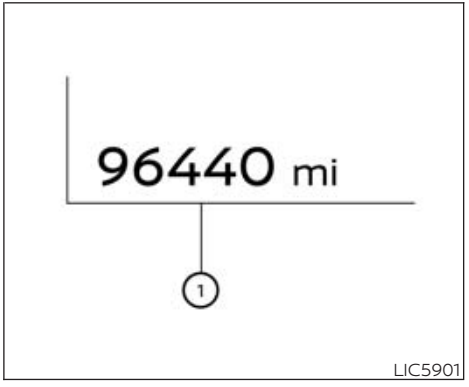

Odometer

The odometer ① is displayed in the vehicle information display when the ignition switch is placed in the ON position.

The odometer records the total distance the vehicle has been driven.

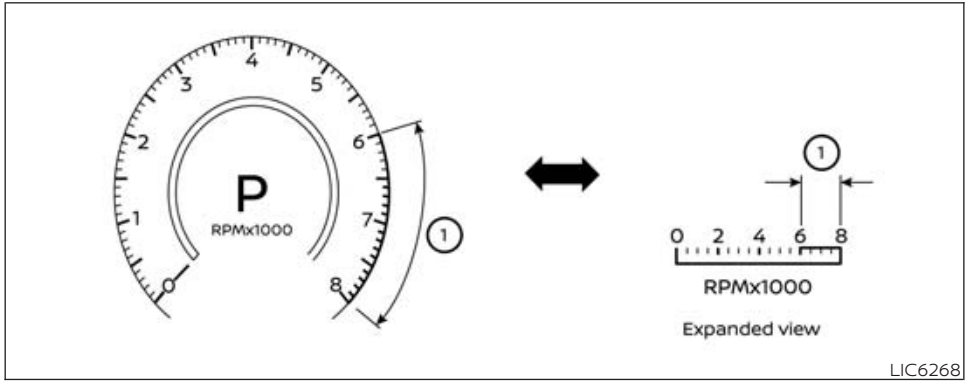

TACHOMETER

The tachometer indicates engine speed in revolutions per minute (rpm). Do not rev engine into the red zone ①.

⚠CAUTION

When engine speed approaches the red zone, reduce engine speed. Operating the engine in the red zone may cause serious engine damage.

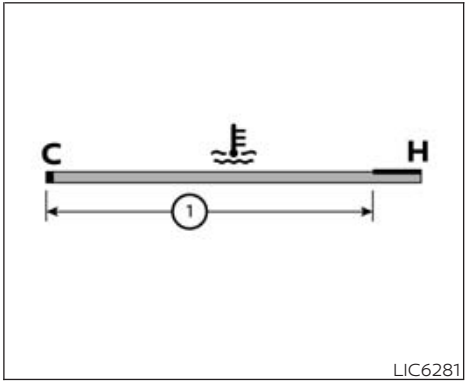

ENGINE COOLANT TEMPERATURE GAUGE

The gauge indicates the engine coolant temperature. The engine coolant temperature is within the normal range ① when the gauge needle points within the zone shown in the illustration.

The engine coolant temperature varies with the outside air temperature and driving conditions.

NOTE:

- **The engine coolant temperature gauge is not shown when the meter screen view is set to Expanded view.**

⚠ CAUTION

If the gauge indicates coolant temperature near the hot (H) end of the normal range, reduce vehicle speed to decrease temperature. If the gauge is over the normal range, stop the vehicle as soon as safely possible. If the engine is overheated, continued operation of the vehicle may seriously damage the engine. For additional information, see "If your vehicle overheats" (P. 472 for immediate action required.

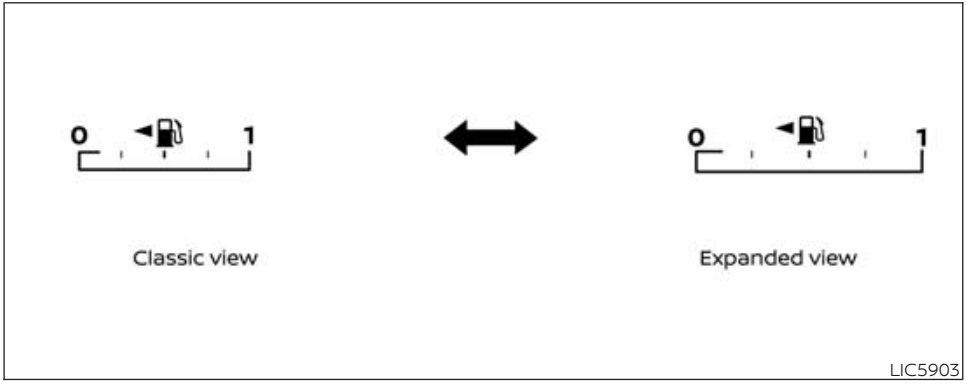

FUEL GAUGE

The gauge indicates the **approximate** fuel level in the tank.

The gauge may move slightly during braking, turning, acceleration, or going up or down hills.

The gauge needle returns to 0 (Empty) after the ignition switch is placed in the OFF position.

The low fuel warning message shows in the vehicle information display when the amount of fuel in the tank is getting low.

Refill the fuel tank before the gauge registers 0 (Empty).

The ◄⛽ indicates that the fuel-filler door is located on the driver's side of the vehicle.

NOTE:

- **If a small amount of fuel is added, or the ignition is on during refueling, the fuel gauge may take longer to update.**

⚠ CAUTION

- **If the vehicle runs out of fuel, the Malfunction Indicator Light (MIL) may come on. Refuel as soon as possible. After a few driving trips, the light should turn off. If the light remains on after a few driving trips, have the vehicle inspected. It is recommended that you visit a NISSAN dealer for this service.**
- **For additional information, see "Malfunction Indicator Light (MIL)" (P. 94).**

DISTANCE TO EMPTY (DTE)

Displays the estimated distance the vehicle can be driven before refueling. The value is calculated based on recent fuel economy, the amount of fuel remaining in the fuel tank, and the actual fuel consumption.

Changes in driving patterns or conditions can cause the DTE value to vary. As a result, the value displayed may differ from the actual distance that can be driven.

DTE display will change to "---" when the fuel level in the tank is getting low, prior to the fuel gauge reaching 0 (Empty).

NOTE:

- **The DTE value after refill is estimated based on recent fuel economy and amount of fuel added.**
- **If a small amount of fuel is added, or the ignition is on during refueling, the display may not update correctly.**
- **Conditions that affect the fuel economy will also affect the estimated DTE value (city/highway driving, idle time, remote start time, terrain, seasonal weather, added vehicle weight, added deflectors, roof racks, etc.).**

WARNING & INDICATOR LIGHTS

Warning & Indicator Lights (Red)

Warning & Indicator Lights (Yellow)

Warning & Indicator Lights (Other)

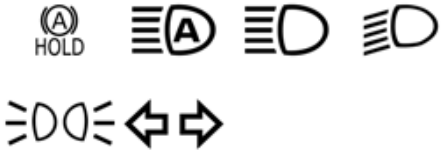

CHECKING LIGHTS

With all doors closed, apply the parking brake, fasten the seat belts and place the ignition switch in the ON position without starting the engine. The following lights will come on:

PARK or , , , , , ,

The following lights will come on briefly and then go off:

, BRAKE or , ABS or , , , , , , , , ,

If any light fails to come on or operate in a way other than described, it may indicate a burned-out bulb and/or a system malfunction. Have the system checked. It is recommended that you visit a NISSAN dealer for this service.

Some indicators and warnings are also displayed in the vehicle information display between the speedometer and tachometer. For additional information, see "Vehicle information display" (P. 97).

WARNING/INDICATOR LIGHTS (red)

Basic Information

For additional information, see "Vehicle information display" (P. 97).

Brake warning light

Basic Information

BRAKE OR

This light functions for both the parking brake and the foot brake systems.

Low brake fluid warning light

When the ignition switch is placed in the ON position, the light warns of a low brake fluid level. If the light comes on while the engine is running with the parking brake not applied, stop the vehicle and perform the following:

1. Check the brake fluid level. Add brake fluid as necessary. For additional information, see "Brake fluid" (P. 494).
2. If the brake fluid level is correct, have the warning system checked. It is recommended that you visit a NISSAN dealer for this service.

⚠WARNING

- **Your brake system may not be working properly if the warning light is on. Driving could be dangerous. If you judge it to be safe, drive carefully to the nearest service station for repairs. Otherwise, have your vehicle towed because driving it could be dangerous.**
- **Pressing the brake pedal with the engine stopped and/or a low brake fluid level may increase your stopping distance and braking will require greater pedal effort as well as pedal travel.**
- **If the brake fluid level is below the MINIMUM or MIN mark on the brake fluid reservoir, do not drive until the brake system has been checked. It is recommended that you visit a NISSAN dealer for this service.**

Charge warning light

If this light comes on while the engine is running, it may indicate the charging system is not functioning properly. Turn the engine off and check the drive belt. If the belt is loose, broken, missing, or if the light remains on, have your vehicle serviced immediately. It is recommended that you visit a NISSAN dealer for this service.

⚠CAUTION

Do not continue driving if the drive belt is loose, broken or missing.

Electric power steering warning light (red)

⚠WARNING

- **If the engine is not running or is turned off while driving, the power assist for the steering will not work. Steering will be harder to operate.**
- **When the electric power steering warning light illuminates in red with the engine running, there will be no power assist for the steering. You will still have control of the vehicle, but the steering will be harder to operate. Have the power steering system checked. It is recommended that you visit a NISSAN dealer for this service.**

When the ignition switch is placed in the ON position, the electric power steering warning light illuminates. After starting the engine, the electric power steering warning light turns off. This indicates the power steering is operational.

When the electric power steering warning light illuminates in red, the electric power steering does not operate. Stop the vehicle in a safe place immediately. Have the power steering checked. It is recommended that you visit a NISSAN dealer for this service.

For additional information, see "Electric power steering" (P. 431).

Electric shift control system warning light

This light illuminates when a malfunction occurs in the electric shift control system. When the master warning light illuminates, the chime sounds and the following message is displayed in the vehicle information display: "When parked apply parking brake".

When the ignition is placed in the OFF position, the chime sounds continuously. Ensure the parking brake is applied

Have the system checked. It is recommended that you visit a NISSAN dealer for this service.

Electronic parking brake indicator light

PARK OR

This light illuminates when the electronic parking brake system is operating.

When the ignition switch is placed in the ON position, the electronic parking brake indicator light illuminates. When the engine is

started and the parking brake is released, the indicator light turns off.

If the parking brake is not released, the electronic parking brake indicator light remains illuminated. Ensure the electronic parking brake indicator light has turned off before driving.

If the electronic parking brake indicator light illuminates or flashes while the electronic parking brake warning light (yellow) illuminates, it may indicate that the electronic parking brake system is not functioning properly. Have the system checked. It is recommended that you visit a NISSAN dealer for this service.

For additional information, see "Electronic parking brake (switch type)" (P. 292).

Engine oil pressure warning light

This light warns of low engine oil pressure. If the light flickers or comes on during normal driving, pull off the road in a safe area, stop the engine **immediately** and call a NISSAN dealer or other authorized repair shop.

The engine oil pressure warning light is not designed to indicate a low oil level. Use the dipstick to check the oil level. For additional information, see "Engine oil" (P. 490).

CAUTION

Running the engine with the engine oil pressure warning light on could cause serious damage to the engine almost immediately. Such damage is not covered by the NISSAN New Vehicle Limited Warranty. Turn off the engine as soon as it is safe to do so.

Master warning light

When the ignition is in the ON position, the master warning light illuminates if a warning message appears in the vehicle information display.

For additional information, see "Vehicle information display" (P. 97).

Seat belt warning light and chime

- The light and chime remind you to fasten the seat belts.
- The seat belt warning light will illuminate when the ignition switch is pushed to the ON position if the driver's seat belt is not fastened, or if the front passenger seat belt is not fastened when occupied.
- The seat belt warning light will also illuminate if a rear passenger seat belt is changed from fastened to unfastened.
- If the driver's seat belt is not fastened when the ignition switch is pushed to the ON position, the chime will sound shortly.
- If the vehicle is driven above a certain speed in the conditions that illuminate the seat belt warning light, the lamp will begin to blink and the chime will sound for over one minute, or until the seat belt is fastened again.

NOTE:

- **The warning light and/or chime may activate if an object is placed in the unoccupied front passenger seat. In this case, please remove the object from the front passenger seat.**

- **The warning light and/or chime may activate if any seat belt is unfastened before the vehicle comes to a complete stop. Please remain fastened until the vehicle has come to a complete stop.**

Steering Assist Hands Off warning light

When the Steering Assist is activated, it monitors the driver's steering wheel operation. If the steering wheel is not operated or the driver takes his/her hands off the steering wheel for a period of time, the warning light illuminates. If the driver does not operate the steering wheel after the warning light has been illuminated, an audible alert sounds and the warning flashes in the vehicle information display, followed by a quick brake application to request the driver to take control of the vehicle again. If the driver remains unresponsive, the vehicle will automatically turn on the hazard lights and slow to a complete stop.

For additional information, see "Steering Assist" (P. 378).

Supplemental air bag warning light

When the ignition switch is placed in the ON position, the supplemental air bag warning light illuminates for about 7 seconds and then turns off. This means the system is operational.

If any of the following conditions occur, the front air bag, side air bag, curtain air bag, and pretensioner seat belt systems need servicing:

- The supplemental air bag warning light remains on after approximately 7 seconds.
- The supplemental air bag warning light flashes intermittently.
- The supplemental air bag warning light does not come on at all.

It is recommended that you visit a NISSAN dealer for these services.

Unless checked and repaired, the supplemental restraint system (air bag system) and/or the pretensioners may not function properly. For additional information, see "Supplemental Restraint System (SRS)" (P. 53).

⚠ WARNING

If the supplemental air bag warning light is on, it could mean that the front air bag, side air bag, curtain air bag systems and/or pretensioner systems will not operate in an accident. To help avoid injury or death to yourself or others, have your vehicle checked as soon as possible. It is recommended that you visit a NISSAN dealer for this service.

WARNING/INDICATOR LIGHTS (yellow)

Basic Information

For additional information, see "Vehicle information display" (P. 97).

Anti-lock Braking System (ABS) warning light

ABS OR

When the ignition switch is placed in the ON position, the ABS warning light illuminates and then turns off. This indicates the ABS is operational.

If the ABS warning light illuminates while the engine is running or while driving, it may indicate the ABS is not functioning properly. Have the system checked. It is recommended that you visit a NISSAN dealer for this service.

If an ABS malfunction occurs, the anti-lock function is turned off. The brake system then operates normally but without anti-lock assistance. For additional information, see "Brake system" (P. 432).

Automatic Emergency Braking (AEB) with Pedestrian Detection system warning light

This light comes on when the ignition switch is placed in the ON position. It turns off after the engine is started.

This light illuminates when the AEB with Pedestrian Detection system is set to OFF in the meter or when the Vehicle Dynamic Control (VDC) system is turned off.

If the light illuminates when the AEB with Pedestrian Detection system is on, it may indicate that the system is unavailable. For additional information, see "Automatic Emergency Braking (AEB) with Pedestrian Detection" (P. 397) and "Intelligent Forward Collision Warning (I-FCW)" (P. 411).

Electric power steering warning light (yellow)

⚠WARNING

- **If the engine is not running or is turned off while driving, the power assist for the steering will not work. Steering will be harder to operate.**
- **When the electric power steering warning light illuminates in yellow with the engine running, the power assist to the steering is lowered. You will still have control of the vehicle, but the steering will be harder to operate. Have the power steering system checked. It is recommended that you visit a NISSAN dealer for this service.**

When the ignition switch is placed in the ON position, the electric power steering warning light illuminates. After starting the engine, the electric power steering warning light turns off. This indicates the power steering is operational.

When the electric power steering warning light illuminates in yellow, the power assist to the steering is lowered. At this time, greater steering efforts are required. Securely grip the steering wheel and operate it with greater force than usual. Have the power steering checked. It is recommended that you visit a NISSAN dealer for this service.

For additional information, see "Electric power steering" (P. 431).

Electronic parking brake warning light

When the ignition switch is in the ON position, the electronic parking brake warning light illuminates and then turns off.

The electronic parking brake system warning light functions for the electronic parking brake system. If the warning light illuminates, it may indicate the electronic parking brake system is not functioning

properly. Have the system checked. It is recommended that you visit a NISSAN dealer for this service.

For additional information, see "Parking brake" (P. 292).

Front passenger air bag status light

The front passenger air bag status light will be lit and the passenger front air bag and passenger knee air bag will be off depending on how the front passenger seat is being used.

For additional information, see "Front passenger air bag and status light" (P. 64).

Low tire pressure warning light

Basic Information

Your vehicle is equipped with a Tire Pressure Monitoring System (TPMS) that monitors the tire pressure of all tires except the spare.

The low tire pressure warning light warns of low tire pressure or indicates that the TPMS is not functioning properly.

After the ignition switch is placed in the ON position, this light illuminates for about 1 second and turns off.

Low tire pressure warning

If the vehicle is being driven with low tire pressure, the warning light will illuminate. A "Tire Pressure Low - Add Air" warning also appears in the vehicle information display.

When the low tire pressure warning light illuminates, you should stop and adjust the tire pressure of all four tires to the recommended COLD tire pressure shown on the Tire and Loading Information label located in the driver's door opening. The low tire pressure warning light does not automatically turn off when the tire pressure is adjusted. After the tire is inflated to the recommended pressure, the vehicle must be driven at speeds above 16 mph (25 km/h) to activate the TPMS and turn off the low tire pressure warning light. Use a tire pressure gauge to check the tire pressure.

The "Tire Pressure Low - Add Air" warning appears each time the ignition switch is placed in the ON position as long as the low tire pressure warning light remains illuminated.

For additional information, see "Vehicle information display" (P. 97) and "Tire Pressure Monitoring System (TPMS)" (P. 271).

TPMS malfunction

If the TPMS is not functioning properly, the low tire pressure warning light will flash for approximately 1 minute when the ignition switch is placed in the ON position. The light will remain on after 1 minute. Have the system checked. It is recommended that you visit a NISSAN dealer for this service. The "Tire Pressure Low — Add Air" warning does not appear if the low tire pressure warning light illuminates to indicate a TPMS malfunction.

For additional information, see "Tire Pressure Monitoring System (TPMS)" (P. 271) and "Tire pressure" (P. 511).

⚠ WARNING

- Radio waves could adversely affect electric medical equipment. Those who use a pacemaker should contact the electric medical equipment manufacturer for the possible influences before use.
- If the light does not illuminate with the ignition switch placed in the ON position, have the vehicle checked as soon as possible. It is recommended that you visit a NISSAN dealer for this service.
- If the light illuminates while driving, avoid sudden steering maneuvers or abrupt braking, reduce vehicle speed, pull off the road to a safe location and stop the vehicle as soon as possible. Driving with under-inflated tires may permanently damage the tires and increase the likelihood of tire failure. Serious vehicle damage could occur and may lead to an accident and could result in serious personal injury or death. Check the tire pressure for all four tires. Adjust the tire pressure to the recommended COLD tire pressure shown on the Tire and Loading Information label located in the driver's door opening to turn the low tire pressure warning light off. If the light still illuminates while driving after adjusting the tire pressure, a tire may be flat or the TPMS may be malfunctioning. If you have a flat tire, repair it with an emergency tire puncture repair kit (if so equipped) as soon as possible or replace it with a spare tire (if so equipped) as soon as possible. If no tire is flat and all tires are properly inflated, have the vehicle checked. It is recommended that you visit a NISSAN dealer for this service.
- When using a wheel without the TPMS such as the spare tire, the TPMS will not function and the low tire pressure warning light will flash for approximately 1 minute. The light will remain on after 1 minute. Have your tires replaced and/or TPMS system reset as soon as possible. It is recommended that you visit a NISSAN dealer for these services.
- Replacing tires with those not originally specified by NISSAN could affect the proper operation of the TPMS.
- To help avoid serious personal injury or death, when checking your tire pressure, either as part of routine maintenance or because of a TPMS alert, please check the pressure in all of your tires. Driving on underinflated tires can cause tire failure and interfere with the proper operation of other vehicle systems.

⚠ CAUTION

- The TPMS is not a substitute for the regular tire pressure check. Be sure to check the tire pressure regularly.
- If the vehicle is being driven at speeds of less than 16 mph (25 km/h), the TPMS may not operate correctly.
- Be sure to install the specified size of tires to the four wheels correctly.

Malfunction Indicator Light (MIL)

Basic Information

If this indicator light comes on steady or blinks while the engine is running, it may indicate a potential emission control malfunction.

The MIL may also come on steady if the vehicle runs out of fuel. Check to make sure that the vehicle has at least 3 gallons (11.4 liters) of fuel in the fuel tank.

After a few driving trips, the light should turn off if no other potential emission control system malfunction exists.

If this indicator light comes on steady for 20 seconds and then blinks for 10 seconds when the engine is not running, it indicates that the vehicle is not ready for an emission control system inspection/maintenance test. For additional information, see "Readiness for Inspection/Maintenance (I/M) test" (P. 584).

Operation

The MIL will come on in one of two ways:

- MIL on steady — An emission control system malfunction has been detected. Have the vehicle inspected. It is recommended that you visit a NISSAN dealer for this service. You do not need to have your vehicle towed to the dealer.
- MIL blinking — An engine misfire has been detected which may damage the emission control system. To reduce or avoid emission control system damage:
  - do not drive at speeds above 45 mph (72 km/h).
  - avoid hard acceleration or deceleration.
  - avoid steep uphill grades.
  - if possible, reduce the amount of cargo being hauled or towed.

The MIL may stop blinking and come on steady. Have the vehicle inspected. It is recommended that you visit a NISSAN dealer for this service. You do not need to have your vehicle towed to the dealer.

⚠ CAUTION

Continued vehicle operation without having the emission control system checked and repaired as necessary could lead to poor driveability, reduced fuel economy, and possible damage to the emission control system.

Master warning light

When the ignition is in the ON position, the master warning light illuminates if a warning message appears in the vehicle information display.

For additional information, see "Vehicle information display" (P. 97).

Rear Automatic Braking (RAB) system warning light

This light comes on when the ignition switch is placed in the ON position. It turns off after the engine is started.

This light illuminates when the RAB system is turned off in the vehicle information display.

If the light illuminates or blinks when the RAB system is on, it may indicate that the system is unavailable. For additional information, see "Rear Automatic Braking (RAB)" (P. 392).

Slip indicator light

This indicator light will blink when the Vehicle Dynamic Control (VDC) system is operating, thus alerting the driver to the fact that the road surface is slippery and the vehicle is nearing its traction limits.

You may feel or hear the system working; this is normal.

The light will blink for a few seconds after the VDC system stops limiting wheel spin.

The indicator light also comes on when you place the ignition switch in the ON position. The light will turn off after approximately 2 seconds if the system is operational. If the light does not come on have the system checked. It is recommended that you visit a NISSAN dealer for this service.

Vehicle Dynamic Control (VDC) OFF indicator light

This indicator light comes on when the VDC OFF switch is pushed to off. This indicates the VDC system has been turned off.

Push the VDC OFF switch again or restart the engine and the system will operate normally. For additional information, see "Vehicle Dynamic Control (VDC) system" (P. 434).

The VDC OFF indicator light also comes on when you place the ignition switch in the ON position. The light will turn off after about 2 seconds if the system is operational. If the light stays on or comes on along with the indicator light while you are driving, have the VDC system checked. It is recommended that you visit a NISSAN dealer for this service.

⚠WARNING

The VDC should remain on unless freeing a vehicle from mud or snow.

While the VDC system is operating, you might feel a slight vibration or hear the system working when starting the vehicle or accelerating, but this is normal.

WARNING/INDICATOR LIGHTS (other)

Basic Information

For additional information, see "Vehicle information display" (P. 97).

Automatic brake hold indicator light (white/green)

This light illuminates to show the status of the Automatic brake hold system.

The automatic brake hold indicator light (white) illuminates when the automatic brake hold system is on standby.

The automatic brake hold indicator light (green) illuminates when the automatic brake hold system is operating.

For additional information, see "Automatic brake hold" (P. 294).

High Beam Assist indicator light (green)

This indicator light illuminates when the headlights come on while the headlight switch is in the AUTO position with the high beams selected. This indicates that the high beam assist is operational.

For additional information, see "Headlight and turn signal switch" (P. 136).

High beam indicator light (blue)

This blue light comes on when the headlight high beams are on and goes out when the low beams are selected.

Low beam indicator light (green)

This light comes on when the switch is turned to the position. The headlights will come on; and the front side, tail, number plate, and instrument lights remain on.

Side light and headlight indicator light (green)

The side light and headlight indicator light illuminates when the side light or headlight position is selected. For additional information, see "Headlight and turn signal switch" (P. 136).

Turn signal/hazard indicator lights (green)

The appropriate light flashes when the turn signal switch is activated.

Both lights flash when the hazard switch is turned on.

AUDIBLE REMINDERS

Brake pad wear warning

The disc brake pads have audible wear warnings. When a disc brake pad requires replacement, it makes a high pitched scraping sound when the vehicle is in motion, whether or not the brake pedal is depressed. Have the brakes checked as soon as possible if the warning sound is heard.

Light reminder chime

With the ignition switch placed in the OFF position, a chime sounds when the driver's door is opened if the headlights or parking lights are on.

Turn the headlight control switch off before leaving the vehicle.

NISSAN Intelligent Key® door buzzer (if so equipped)

The Intelligent Key door buzzer sounds if any one of the following improper operations is found.

- The Intelligent Key is left inside the vehicle when locking the doors.
- The Intelligent Key is taken outside the vehicle when operating the vehicle.

When the buzzer sounds, be sure to check both the vehicle and the Intelligent Key. For additional information, see "NISSAN Intelligent Key® system" (P. 187).

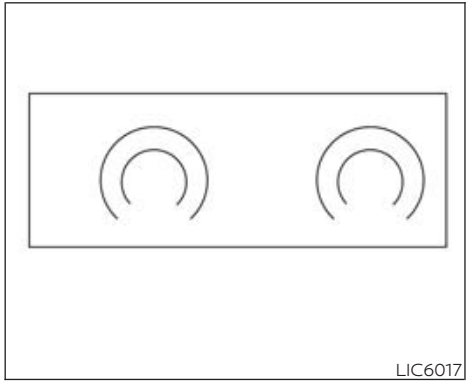

BASIC INFORMATION

The vehicle information display is located to the left of the speedometer. It displays such items as:

- Home
- Audio information
- Navigation information (if so equipped)
- Drive computer information
- Fuel economy information
- Driving aids information
- ProPILOT Assist
- Speed Limit Sign (if so equipped)
- Tire pressure information
- Indicators and warnings
- Vehicle and meter display settings
- Cruise control status
- Odometer
- Gear position information (P, R, N, D)
- Distance To Empty and fuel indicator
- Time
- Outside Air Temperature

The display will be interrupted when a phone call is received. Phone calls can be answered or rejected through the steering wheel controls.

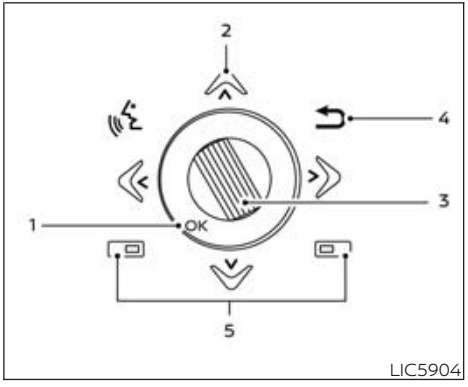

Type A (if so equipped)

HOW TO USE THE VEHICLE INFORMATION DISPLAY

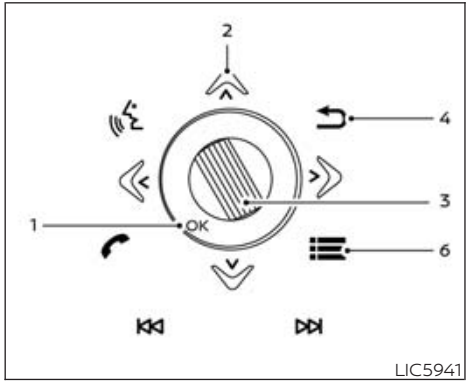

Type B (if so equipped)

The vehicle information display can be changed using the ◀ ▶ ▼ ▲, ↩, and OK buttons located on the steering wheel.

1. OK — Press the dial to change or select an item in the vehicle information display.
2. ◀ ▶ ▼ ▲ - Use these buttons to navigate the vehicle information display.
3. Scroll dial — Use the scroll dial to navigate through the items and change or select an item in the vehicle information display. The scroll dial allows up or down navigation and press to select.
4. ↩ — go back to the previous menu
5. Selects whether the buttons on the steering wheel will control the vehicle information display or the center/navigation (if so equipped) display.
6. Short cut menu button — Press this button to open a shortcut menu.

The OK, ◀ ▶ and ↩ buttons also control audio and control panel functions in some conditions. Most screens and menus offer instruction prompts of the steering switch buttons to indicate how to control the vehicle information display. Dots on the right side of the vehicle information display will appear if there is more than one page of menu items or warning messages. The OK button changes the audio source and the ▼ ▲ buttons also control voice recognition manual mode. The OK button can be used to change the audio source when the audio screen is displayed. The ▼ ▲ buttons can be used when controlling voice recognition prompts manually. For additional information, see the separate NissanConnect® Owner's Manual.

STARTUP DISPLAY

When the vehicle in placed in the ON or ACC position the screens that display in the vehicle information display include:

- Home
- Audio
- Navigation (if so equipped)
- Drive computer
- Fuel economy
- Driving aids
- Speed Limit Sign
- Tire pressure information
- Warning review
- Settings

The warnings review title screen will show how many active warnings exist, and will only display if any warnings are present. For additional information on warnings and indicators, see "Vehicle information display warnings and indicators" (P. 116).

To control what items display in the vehicle information display, see "Customize Display" (P. 113).

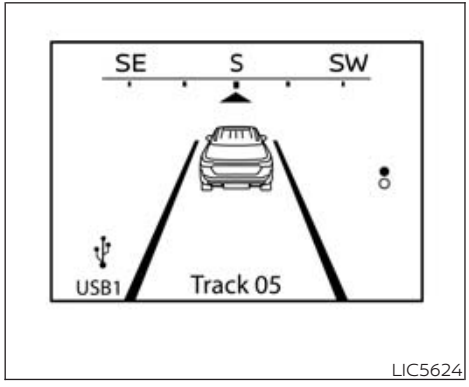

LIC5624

TRIP COMPUTER

Home

The Home mode shows the following information:

- Vehicle speed
- Navigation (if so equipped)
- Audio

The Home display will switch to the audio source by pressing the OK button.

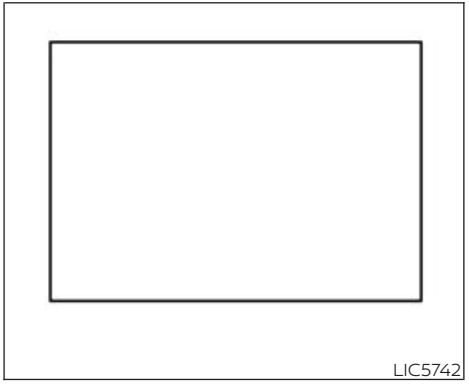
LIC5742

Blank

This display is a blank screen and shows no information.

NOTE:

- **If the meter screen view is changed to expand the vehicle information display, this display will show limited driving information and will not be blank.**

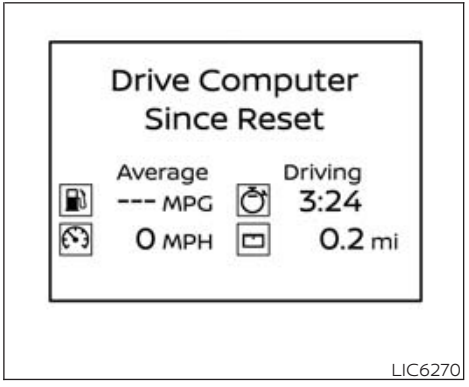

LIC6270

Drive computer

Average fuel consumption:

The average fuel consumption shows the average fuel consumption since the last reset.

Average speed:

The average speed shows the average vehicle speed since the last reset.

Trip odometer:

The trip odometer shows the total distance the vehicle has been driven since the last reset.

Elapsed time:

The elapsed time shows the time since the last reset.

The Drive computer mode has three modes of operation. You can switch between Since Reset, Since Start or Since Refuel by pushing the scroll dial.

Since Reset can be reset manually by using the scroll dial.

Since Start can be reset manually by using the scroll dial or will be reset automatically approximately 30 minutes after the ignition switch is placed in the OFF position.

Since Refuel will be reset automatically each time when refueling.

NOTE:

- **If a small amount of fuel is added, or the ignition is on during refueling, the Auto Refuel mode may not be reset until the next refuel.**

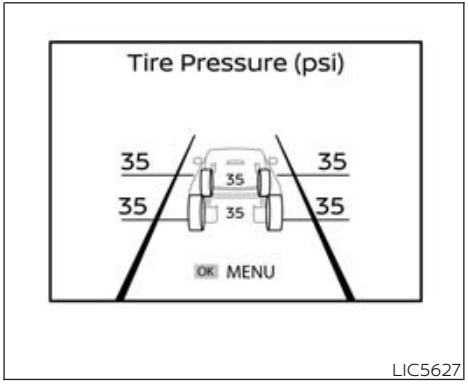

Tire Pressures

The tire pressure mode shows the pressure of all four tires while the vehicle is driven.

When the "Tire Pressure Low — Add Air" warning appears, the display can be switched to the tire pressure mode by pushing the ◀ or ▶ switch to reveal additional details on the displayed warning.

When the ignition switch is placed in the ON position, the message "Tire pressures appear while driving" may appear until the vehicle is driven and the TPMS is activated.

For additional information, see "Low tire pressure warning light" (P. 92), "Tire Pressure Monitoring System (TPMS)" (P. 271), "Flat tire" (P. 457) and "Types of tires" (P. 519)

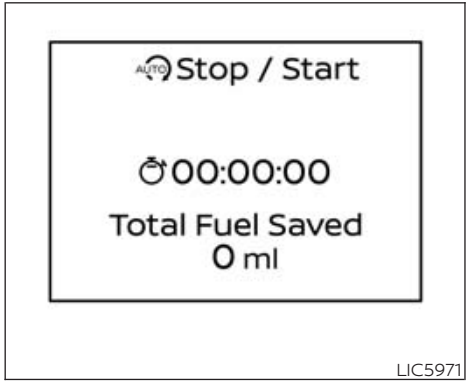

Idling Stop System

The Idling Stop System provides the driver with information about the amount of fuel saved while using the system.

For additional information, see "Idling Stop System" (P. 445).

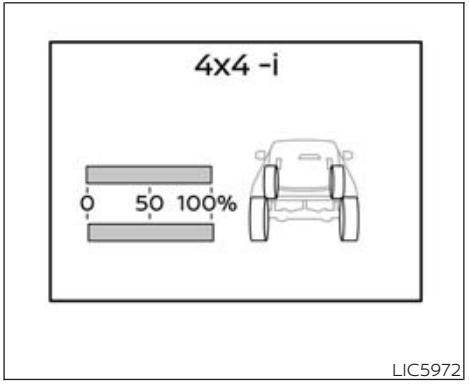

Intelligent 4x4 torque distribution display (if so equipped)

When the Intelligent 4x4 torque distribution display is selected, you can view the distribution ratio of the transmission torque to the front and rear wheels during driving.

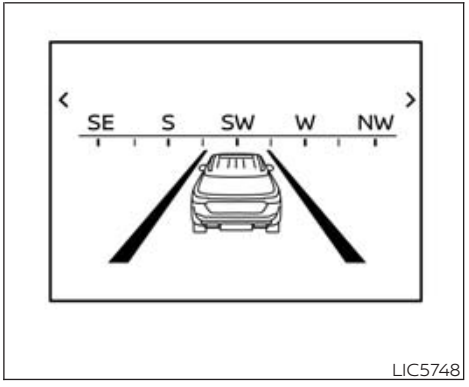

Navigation/Compass (if so equipped)

When the route guidance is set in the navigation system, this item shows the navigation route information.

When no route is set, a compass is displayed on the screen.

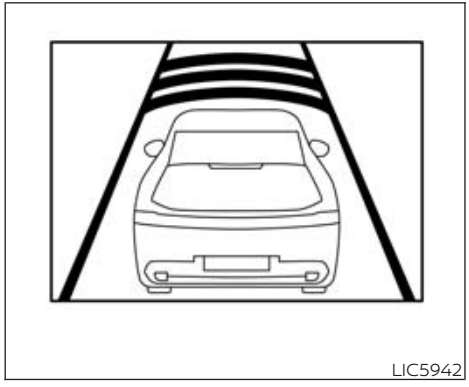

ProPILOT Assist

The ProPILOT Assist mode shows operating conditions for the following systems:

- Intelligent Cruise Control (ICC)
- Steering Assist

The display will also be shown when the ProPILOT Assist is turned on. For additional information, see "ProPILOT Assist Systems" (P. 344).

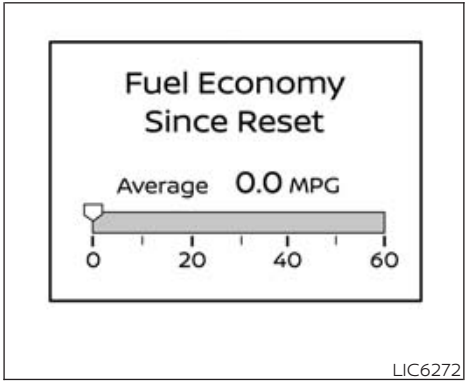

Fuel economy display

Current fuel consumption:

The current fuel consumption mode shows the current fuel consumption.

Average fuel consumption:

The average fuel consumption mode shows the average fuel consumption since the last reset. Press the OK button on the steering wheel to bring up the drive computer Reset menu, and follow the instructions to reset.

The display is updated every 30 seconds. For about the first 1/3 of a mile (500 m) after a reset, the display shows "– –."

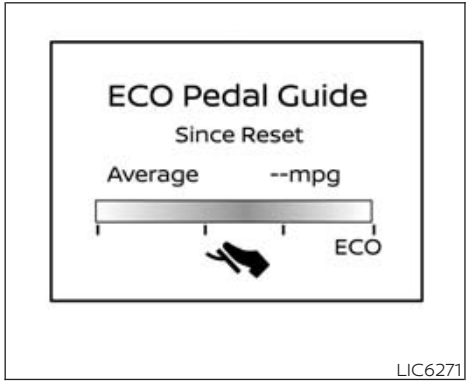

Eco Pedal Guide

When the ECO mode is selected, you can view ECO Pedal Guide function for improving fuel economy.

The ECO Pedal Guide mode has three modes of operation. You can switch between Manual Reset1, Manual Reset2 or Auto Refuel by pushing the scroll dial.

Since Reset can be reset manually by using the scroll dial.

Since Start can be reset manually by using the scroll dial or will be reset automatically approximately 30 minutes after the ignition switch is placed in the OFF position (if so equipped).

Since Refuel will be reset automatically each time when refueling.

For additional information, see "ECO mode" (P. 298).

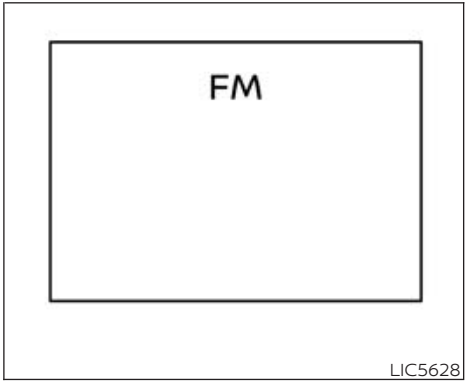

Audio

The audio mode shows the status of audio information.

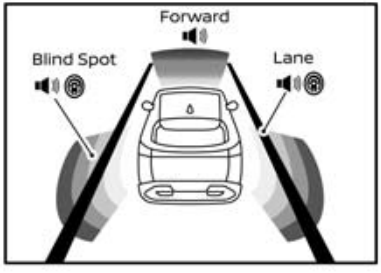

LIC5630

Driving Aids

The driving aids mode shows the operating condition for the following systems (if so equipped):

- Forward
  - Automatic Emergency Braking (AEB) with Pedestrian Detection system
  - Intelligent Forward Collision Warning (I-FCW)
- Lane:
  - Lane Departure Warning (LDW)
  - Intelligent Lane Intervention (I-LI)
- Blind Spot:
  - Blind Spot Warning (BSW)
  - Intelligent Blind Spot Intervention (I-BSI)

For additional information, see "Intelligent Blind Spot Intervention (I-BSI)" (P. 325), "Blind Spot Warning (BSW)" (P. 315), "Lane Departure Warning (LDW)" (P. 304), "Automatic Emergency Braking (AEB) with Pedestrian Detection" (P. 397), "Intelligent Forward Collision Warning (I-FCW)" (P. 411) or "Intelligent Lane Intervention (I-LI)" (P. 309).

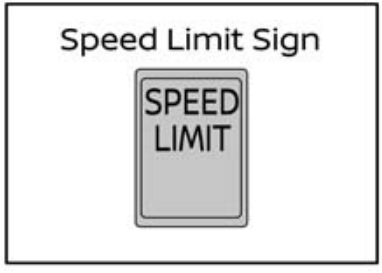

LIC5631

Traffic Sign Recognition

The Traffic Sign Recognition (TSR) system provides the driver with information about the most recently detected speed limit.

For additional information, see "Traffic Sign Recognition (TSR) (P. 301).

Warnings

The warnings mode allows the driver to view any present warnings.

NOTE:

The warnings mode will only display if any are present.

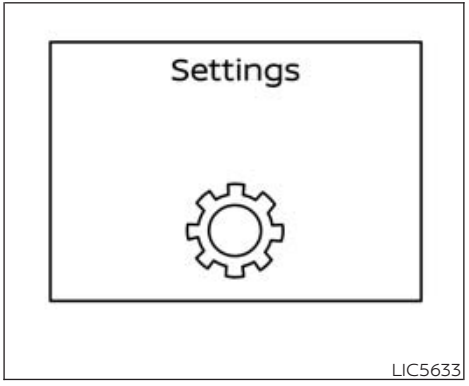

Settings

The settings mode allows the driver to view or modify settings.

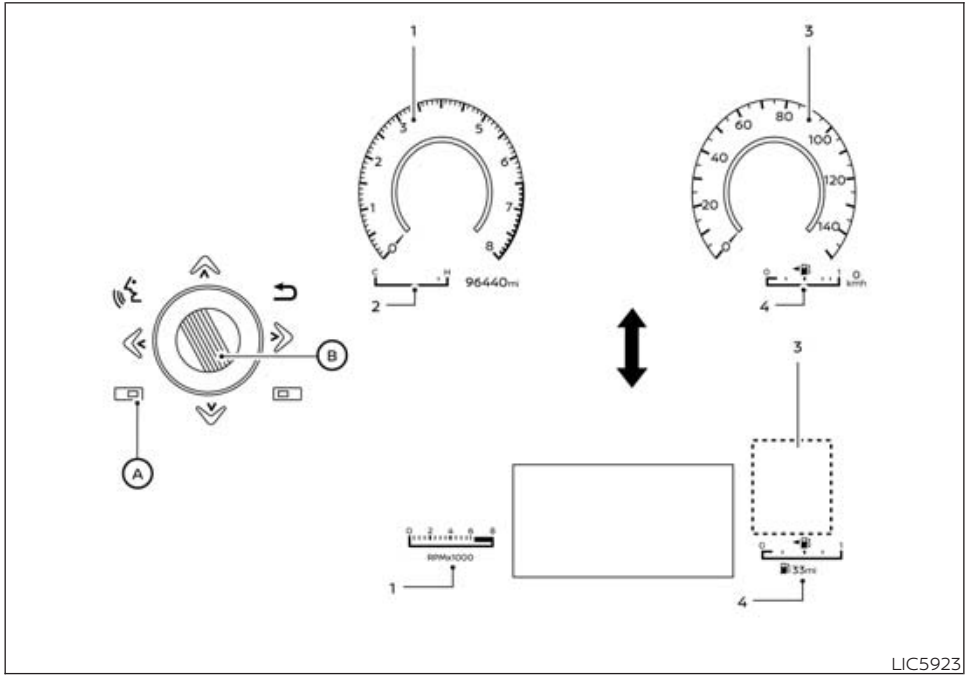

CHANGING THE METER SCREEN VIEW

1. Tachometer
2. Engine coolant temperature gauge
3. Speedometer
4. Fuel gauge

For models with the full-screen display, the meter screen view can be changed to expand the vehicle information display.

To change the meter screen view:

1. Press the shortcut menu button Ⓐ on the right side of the steering wheel. "Shortcut Menu" appears on the vehicle information display.
2. Select "Change Meter View" by rotating the scroll dial Ⓑ and pushing it to change the view.

OIL CONTROL SYSTEM

The oil control system can be accessed in the Maintenance portion of the vehicle information display settings.

Engine oil information informs the distance to oil change. Never exceed one year or 7,500 miles (12,000 km) between oil change intervals for the 2.0L 4 cylinder (KR20DDET engine model).

Display when ignition is ON

- Engine Oil Service due in xxx miles
  - **Display timing:** Remaining oil life is less than 940 miles (1500 km).
  - **Action Required:** Plan to have your vehicle serviced.

- Engine Oil Service due
  - **Display timing:** Remaining oil life is 0 miles (0 km).
    Action Required: Have your vehicle serviced within two weeks or less than 500 miles (800 km).

The oil change interval cannot be adjusted manually.

The distance to oil change interval is calculated depending on the driving conditions and set automatically by the oil control system. A reminder will be displayed when approaching the end of the service interval.

When the Factory Reset option is selected in the vehicle information display, the oil control system will also be reset to initial value. Please change the engine oil when Factory Reset is selected.

⚠ CAUTION

- **If the oil replacement indicator is displayed, change the engine oil within two weeks or less than 500 miles (800 km).**
- **Operating the vehicle with deteriorated oil can damage the engine.**

To reset oil control system:

1. Place the ignition switch in the ON position.
2. Press the ◀ and ▶ buttons located on the steering wheel until "Settings" displays in the vehicle information display. Use the scroll dial to select "Maintenance". Then, press the scroll dial.
3. Select "Oil Control System" and press the scroll dial.
4. Press the scroll dial according to the reset instructions displayed at the bottom of the screen.

For additional information, see "Maintenance" (P. 113).

SETTINGS

Basic Information

The setting mode allows you to change the information displayed in the vehicle information display:

- VDC Setting
- Driver Assistance
- Head-Up Display
- ECO Mode Setting
- TPMS Setting
- Clock
- Vehicle Settings
- Towing Settings
- Maintenance
- Customize Display
- Unit / Language
- Factory Reset

VDC Setting

Basic Information

Displays available VDC settings.

Some menu items shown below may not be equipped on your vehicle.

System

Displays available system settings.

Some menu items shown below may not be equipped on your vehicle.

- **System**: Allows the user to turn the VDC system on or off. For additional information, see "Vehicle Dynamic Control (VDC) system" (P. 434).

Driver Assistance

Basic Information

The driver assistance menu allows the user to change the various driving aids, parking aids and braking features.

Some menu items shown below may not be equipped on your vehicle.

Intelligent Cruise

Displays Intelligent Cruise Control (ICC) options.

Some menu items shown below may not be equipped on your vehicle.

- **Speed Adjust by Route**: Allows user to turn the speed adjust by route feature on or off. For additional information, see "ProPILOT Assist 1.1" (P. 358) or "ProPILOT Assist 2.1" (P. 360).
- **Spd.Limit Assist**: Allows user to turn the speed limit assist to OFF, Manual or Auto. For additional information, see "ProPILOT Assist 1.1" (P. 358) or "ProPILOT Assist 2.1" (P. 360).
- **Speed Limit Offset**: Allows the user to adjust the speed limit offset.

Lane Centering Assist

Displays lane centering assist options.

Some menu items shown below may not be equipped on your vehicle.

- **Steering Assist**: Allows user to turn the Steering Assist of the ProPILOT Assist system on or off. For additional information, see "ProPILOT Assist" (P. 358) or "ProPILOT Assist 2.1" (P. 360).
- **Hands Off Mode**: Allows user to turn the hands off mode on or off. For additional information, see "ProPILOT Assist" (P. 358) or "ProPILOT Assist 2.1" (P. 360).

Lane Change Assist

Displays lane change assist options.

Some menu items shown below may not be equipped on your vehicle.

- **Activate by turn signal**: Allows user to turn the activate by turn signal setting on or off.
- **Passing Assist**: Allows user to turn the passing assist feature on or off. For additional information, see "Passing Assist" (P. 388).
- **Passing Setting**: Allows user to turn the passing setting to Sport, Standard or Comfort.

Lane Assist

Displays available lane options.

Some menu items shown below may not be equipped on your vehicle.

- **Warning**: Allows user to turn the Lane Departure Warning (LDW) system on or off. For additional information, see "Lane Departure Warning (LDW)" (P. 304).
- **Intervention**: Allows user to turn Intelligent Lane Intervention (I-LI) system on or off. For additional information, see "Intelligent Lane Intervention (I-LI)" (P. 309).
- **Lane Sensitivity**: Allows the user to select the sensitivity of the Lane Assist to Strong/Normal/Mild.
- **Steering Vibration**: Allows the user to select the strength of the steering vibration to High/Medium/Low.

Blind Spot Assist

Displays available blind spot options.

Some menu items shown below may not be equipped on your vehicle.

- **Warning**: Allows user to turn the Blind Spot Warning (BSW) system on or off. For additional information, see "Blind Spot Warning (BSW)" (P. 315).

- **Intervention**: Allows user to turn the Intelligent Blind Spot Intervention (I-BSI) system on or off. For additional information, see "Intelligent Blind Spot Intervention (I-BSI)" (P. 325).

Emergency Assist

Displays available emergency brake options.

Some menu items shown below may not be equipped on your vehicle.

- **Emergency Braking**: Allows user to turn the front emergency braking system on or off. For additional information, see "Automatic Emergency Braking (AEB) with Pedestrian Detection" (P. 397) and "Intelligent Forward Collision Warning (I-FCW)" (P. 411).
- **Rear Auto Braking**: Allows user to turn the rear emergency braking system on or off. For additional information, see "Rear Automatic Braking (RAB)" (P. 392).

Traffic Sign Assist

Displays available Traffic Sign Assist aids.

Some menu items shown below may not be equipped on your vehicle.

- **Speed Limit Sign**: Allows user to turn the Speed Limit Sign on or off. For additional information, see "Traffic Sign Recognition (TSR)" (P. 301).
- **Speed Limit Warning**: Allows user to turn the Speed Limit Warning on or off. For additional information, see "Traffic Sign Recognition (TSR)" (P. 301).

Parking Assist

Displays available parking aids.

Some menu items shown below may not be equipped on your vehicle.

- **Rear Cross Traffic Alert**: Allows user to turn the Rear Cross Traffic Alert (RCTA) system on or off. For additional information, see "Rear Cross Traffic Alert (RCTA)" (P. 336).
- **Moving Object**: Allows user to turn the Moving Object Detection (MOD) on or off. For additional information, see "Moving Object Detection (MOD)" (P. 249).
- **Front Sonar**: Allows user to turn the front sonar on or off.
- **Rear Sonar**: Allows user to turn the rear sonar on or off.
- **Sonar Distance**: Allows user to set the distance sensor range to Long/Medium/Short.
- **Auto Show Sonar**: Allows user to auto display the sonar. For additional information, see "Front and rear sonar system" (P. 439).
- **Sonar Volume**: Allows the user to set the parking sensor volume to High/Medium/Low.

Driver Monitor

Displays available driver monitor aids.

Some menu items shown below may not be equipped on your vehicle.

- **Driver Alertness**: Allows user to turn the Driver Alertness on or off. For additional information, see "Intelligent Driver Alertness (I-DA)" (P. 422).
- **Driver Monitor**: Allows user to turn the Driver Monitor on or off. For additional information, see "ProPILOT Assist Systems" (P. 344) or "ProPILOT Assist 2.1" (P. 344).

Sound Setting

Some menu items shown below may not be equipped on your vehicle.

- **Warning Volume**: Select to set the warning volume to Low/Medium/High.

Timer Alert

Some menu items shown below may not be equipped on your vehicle.

- **Timer Alert**: Allows user to set the timer alert.

Low Temp. Alert

Some menu items shown below may not be equipped on your vehicle.

- **Low Temp. Alert**: Allows user to turn the low temperature alert on or off.

Head-Up Display (if so equipped)

Basic Information

The Head—Up Display menu allows the user to control the Head—Up Display feature.

Some menu items shown below may not be equipped on your vehicle.

Brightness

Some menu items shown below may not be equipped on your vehicle.

- **Brightness**: Allows user to change the brightness.

Height

Some menu items shown below may not be equipped on your vehicle.

- **Height**: Allows user to change the height.

Rotation

Some menu items shown below may not be equipped on your vehicle.

- **Rotation**: Allows user to change the rotation.

Contents selection

Displays the available content in the Head-Up Display.

Some menu items shown below may not be equipped on your vehicle.

- **Navigation**: Allows user to turn the navigation on or off.
- **Driving Assist**: Allows user to turn the driving assist on or off.
- **Speed Limit Sign**: Allows user to turn the speed limit sign on or off.
- **Audio**: Allows user to turn the audio on or off.
- **TEL/SMS**: Allows user to turn the TEL/SMS on or off.

Reset

Some menu items shown below may not be equipped on your vehicle.

- Reset: Allows user to reset the settings. Once selected, the user can confirm or cancel the reset.

ECO Mode Setting

Basic Information

The ECO mode setting menu allows the user to change the settings for the ECO mode.

To change the status or turn on or off any of the systems displayed in the "ECO Mode Setting" menu, use the scroll dial to select and change a menu item.

Some menu items shown below may not be equipped on your vehicle.

ECO Customize

Displays available ECO mode settings.

Some menu items shown below may not be equipped on your vehicle.

- **Cruise Control**: Allows user to turn the cruise control ECO option on or off. For additional information, see "ProPILOT Assist Systems" (P. 344).
- **Idling stop**: Allows user to turn the Idling Stop System (ISS) ECO option on or off. For additional information, see "Idling Stop System" (P. 445).
- **Air Conditioning**: Allows user to turn the Air Conditioning ECO option on or off. For additional information, see "ECO Customize" (P. 298).

ECO Drive Assist

Displays available ECO information settings.

Some menu items shown below may not be equipped on your vehicle. For additional information, see "ECO Drive Report" (P. 300).

- **ECO Drive Report**: Allows user to turn the ECO Drive Report on or off.

View History

Some menu items shown below may not be equipped on your vehicle.

- **View History**: Displays the history report for the vehicle. For additional information, see "ECO Drive Report" (P. 300).

  To reset the View History:
  - Select "View History" using the scroll dial and push it.
  - Push the scroll dial.
  - Select "Yes" by pushing the scroll dial.

Tire Pres ECO advice

Some menu items shown below may not be equipped on your vehicle.

- **Tire Pres ECO advice**: Allows user to turn the tire pressure ECO advice on or off.

TPMS Setting

Basic Information

The TPMS settings menu allows the user to view or change the tire pressure units displayed in the vehicle information display.

Some menu items shown below may not be equipped on your vehicle.

Tire Pressure Unit

Some menu items shown below may not be equipped on your vehicle.

- **Tire Pressure Unit**: Allows user to select the tire pressure units that will display in the vehicle information display.

Clock

Basic Information

Some menu items shown below may not be equipped on your vehicle.

Clock

Some menu items shown below may not be equipped on your vehicle.

- Clock: Allows user to enable or disable the clock in the vehicle information display.

Vehicle Settings

Basic Information

The vehicle settings menu allows the user to change the settings for lights, wipers, locking, keys, and other vehicle settings.

Some menu items shown below may not be equipped on your vehicle.

Power Back Door

Some menu items shown below may not be equipped on your vehicle.

- **Power Back Door**: Allows user to turn the power back door on or off.

Lighting

Displays the available lighting options.

Some menu items shown below may not be equipped on your vehicle.

- **Welcome Lights**: Allows user to turn the welcome lights on or off.
- **Auto Light Timing**: Allows user to change when the auto lights activate based on exterior brightness.
- **Light Off Delay**: Allows user to change the duration of time that the automatic headlights stay on after the vehicle is shut off.

Locking

Displays the available locking options.

Some menu items shown below may not be equipped on your vehicle.

- **Selective Unlock**: Allows user to turn the selective unlock feature on or off. When this item is turned on (default), only the driver's door is unlocked after the driver's door request switch is pushed. All the doors can be unlocked if the request switch is pushed again within 60 seconds. When this feature is turned off, all the doors unlock when the driver's door unlock operation is performed once.
- **Horn beeps on lock**: Allows the user to turn the horn beeps on lock feature on or off.
- **Auto Door Unlock**: Allows the user to set the auto door unlock to Shift to P, Ignition OFF, or OFF.
- **Walk Away Lock**: Allows the user to turn the walk away lock function ON or OFF. For additional information, see "Walk away lock function" (P. 196).
- **Approach Unlock**: Allows the user to turn the approach unlock function ON or OFF. For additional information, see "Approach unlock function" (P. 196).
- **Ext. Door Switch**: Allows user to turn the doors and liftgate exterior request switches on or off.

Wipers

Displays the available wiper options.

Some menu items shown below may not be equipped on your vehicle.

- **Speed Dependent**: Allows user to turn the speed dependent feature on or off.
- **Rain Sensor**: Allows user to turn the rain sensor on or off.
- **Reverse Link**: Allows user to turn the reverse link feature on or off.
- **Drip Wipe**: Allows user to turn the drip wiper on or off.

Driving Position

Displays the available driving position options.

Some menu items shown below may not be equipped on your vehicle.

- **Exit Seat Slide**: When the exit seat slide is on the driver's seat will move backward for easy exit when the ignition switch is placed in the OFF position and the driver's door is opened. After getting into the vehicle and placing the ignition switch in the ON position, the driver's seat will move to the previous set position.
  For additional information, see "Memory seat" (P. 218).
- **Exit Steering**: When the exit steering up feature is turned on, the steering wheel moves upward for easy exit when the ignition switch is in the OFF position and the driver's door is opened. After getting into the vehicle and placing the ignition switch in the ON position, the steering wheel moves to the previous position.
  For additional information, see "Memory seat" (P. 218).

Rear Door Alert

Displays the available Rear Door Alert options.

Some menu items shown below may not be equipped on your vehicle.

- **Horn & Alert**: When selected, the alert is displayed; and the horn sounds.
- **Alert Only**: When selected, only the alert is displayed.
- **OFF**: When selected, no alert or horn will be active.

Mirrors

Displays the available mirror options.

Some menu items shown below may not be equipped on your vehicle.

- **Auto Fold Off**: When selected, the auto fold off is enabled.
- **Unfold at Ignition**: When selected, the unfold at ignition is enabled.
- **Unfold at Unlock**: When selected, the unfold at unlock is enabled.

Towing Settings

Basic Information

The towing settings menu allows the user to access the trailer light check.

Trailer Light Check

The towing settings menu allows the user to access the trailer light check.

Some menu items shown below may not be equipped on your vehicle.

- **Trailer Light Check**: Allows user to start the check in which the vehicle will test various lights that could affect a trailer if connected properly. This feature can also be activated using the NISSAN Intelligent Key®. For additional information, see "NISSAN Intelligent Key® system" (P. 187) and "Towing a trailer" (P. 572).

Maintenance

Basic Information

The maintenance menu allows the user to set reminders for various vehicle maintenance items.

⚠WARNING

The tire replacement indicator is not a substitute for regular tire checks, including tire pressure checks. For additional information, see "Changing wheels and tires" (P. 521). Many factors including tire inflation, alignment, driving habits and road conditions affect tire wear and when tires should be replaced. Setting the tire replacement indicator for a certain driving distance does not mean your tires will last that long. Use the tire replacement indicator as a guide only and always perform regular tire checks. Failure to perform regular tire checks, including tire pressure checks could result in tire failure. Serious vehicle damage could occur and may lead to a collision, which could result in serious personal injury or death.

Oil Control System

Some menu items shown below may not be equipped on your vehicle.

- **Oil Control System**: Displays the remaining distance before the next engine oil service is due.

Tire

Some menu items shown below may not be equipped on your vehicle.

- **Tire**: Allows user to set a reminder at a specific interval or reset the current one.

Other

Some menu items shown below may not be equipped on your vehicle.

- **Other**: Allows user to set a reminder at a specific interval or reset the current one.

Customize Display

Basic Information

The customize display menu allows the user to customize the information that appears in the vehicle information display.

Some menu items shown below may not be equipped on your vehicle.

Change Meter View

Some menu items shown below may not be equipped on your vehicle.

- **Change Meter View**: Allows user to change between the classic and expanded meter views.

Main Menu Selection

Displays the available screens that can be shown in the vehicle information display.

Some menu items shown below may not be equipped on your vehicle.

- **Home**: Allows user to turn the home screen on or off in the vehicle information display.
- **Blank**: Allows user to turn the blank on or off in the vehicle information display.
- **Drive Computer**: Allows user to turn the drive computer screen on or off in the vehicle information display.
- **Fuel Economy**: Allows user to turn the fuel economy screen on or off in the vehicle information display.
- **ECO Pedal Guide**: Allows user to turn the eco pedal guide screen on or off in the vehicle information display.
- **Tire Pressure**: Allows user to turn the tire pressure screen on or off in the vehicle information display.
- **4x4–I**: Allows user to turn the 4x4–I screen on or off in the vehicle information display.
- **Stop/Start**: Allows user to turn the stop/start screen on or off in the vehicle information display.
- **Navigation**: Allows user to turn the navigation screen on or off in the vehicle information display.
- **Compass**: Allows user to turn the compass screen on or off in the vehicle information display.
- **Audio**: Allows user to turn the audio controls screen on or off in the vehicle information display.
- **Driving Aids**: Allows user to turn the driving aids screen on or off in the vehicle information display.
- **ProPILOT Assist: Allows user to turn the ProPILOT Assist screen on or off in the vehicle information display.**
- **Speed Limit Sign**: Allows user to turn the speed limit sign screen on or off in the vehicle information display.

Route Guidance

Displays the available route guidance settings.

Some menu items shown below may not be equipped on your vehicle.

- **Alerts**: Allows user to turn the alerts on or off.

ProPILOT Assist Display

Some menu items shown below may not be equipped on your vehicle.

- **ProPILOT Assist Display: Allows user to turn the ProPILOT Assist display transition on or off.**

Welcome Effect

Displays the available welcome effect settings.

Some menu items shown below may not be equipped on your vehicle.

- **Animation**: Allows user to turn the animation effect on or off.

Operation Guidance

Displays the available operation guidance settings.

Some menu items shown below may not be equipped on your vehicle.

- **Lights**: Allows user to turn the light mode guidance on or off.
- **Wiper**: Displays the available wiper guidance settings.
  - **Front**: Allows user to turn the front wiper guidance on or off.
  - **Rear**: Allows user to turn the rear wiper guidance on or off.
- **High Beam Assist**: Allows user to turn the High Beam Assist guidance on or off.
- **Seat Memory**: Allows user to turn the seat memory guidance on or off.

Unit/Language

Basic Information

The Unit/Language menu allows the user to change the units and language shown in the vehicle information display.

Some menu items shown below may not be equipped on your vehicle.

Mileage/Fuel

Some menu items shown below may not be equipped on your vehicle.

- Mileage/Fuel: Allows user to select different mileage display units.

Tire Pressure

Some menu items shown below may not be equipped on your vehicle.

- **Tire Pressure**: Allows user to select different pressure display units.

Temperature

Some menu items shown below may not be equipped on your vehicle.

- **Temperature**: Allows user to select different temperature display units.

Language

Some menu items shown below may not be equipped on your vehicle.

- Language: Allows user to select different languages.

Factory Reset

Basic Information

The factory reset menu allows the user to restore the vehicle information display settings to factory status.

Some menu items shown below may not be equipped on your vehicle.

Factory Reset

Some menu items shown below may not be equipped on your vehicle.

- **Factory Reset**: Allows user to reset the vehicle information display settings to the original factory settings. Once selected, the user can confirm or cancel the reset.

VEHICLE INFORMATION DISPLAY WARNINGS AND INDICATORS

Basic Information

The following messages may appear in your vehicle information display.

Place the key near the start switch

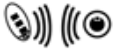

This indicator appears when the battery of the Intelligent Key is low and when the Intelligent Key system and the vehicle are not communicating normally.

If this appears, touch the ignition switch with the Intelligent Key while depressing the brake pedal. For additional information, see "NISSAN Intelligent Key® battery discharge" (P. 281).

Key Battery Low

This indicator appears when the Intelligent Key battery is running out of power.

If this indicator appears, replace the battery with a new one. For additional information, see "Intelligent Key battery replacement" (P. 508).

Key System Error See Owner's Manual

After the ignition switch is placed in the ON position, this warning appears for a period of time and then turns off.

The Key System Error message warns of a malfunction with the Intelligent Key system. If the warning appears while the engine is stopped, it may be impossible to start the engine.

If the warning appears while the engine is running, you can drive the vehicle. However, in these cases, have the system checked. It is recommended that you visit a NISSAN dealer for this service.

Key Not Detected

This warning appears when the Intelligent Key is left outside the vehicle with the ignition switch in the ON position. Make sure the Intelligent Key is inside the vehicle.

For additional information, see "NISSAN Intelligent Key® system" (P. 187).

Brightness indicator

This indicator shows the brightness adjustment of the instrument panel. For additional information, see "Instrument brightness control" (P. 141).

Caution Steep slope

This indicator appears, and a chime sounds when the automatic brake hold function is activated while the vehicle is on a steep hill. Apply the foot brake to stop the vehicle moving. For additional information, see "Automatic brake hold" (P. 294).

Chassis Control System Error See Owner's Manual

This warning appears if the chassis control module detects a malfunction in the chassis control system. Have the system checked. It is recommended that you visit a NISSAN dealer for this service. For additional information, see "Chassis Control" (P. 438).

Check Rear Seat

When the system is enabled, this message appears when the vehicle comes to a complete stop, the vehicle is transitioned from the D (Drive) position to P (Park) position, and the driver exits the vehicle. This message alerts the driver, after a period of time, to check for items in the rear seats after the audible alert has been provided.

NOTE:

This system is disabled until a driver enables it using the vehicle information display. For additional information, see "How to use the vehicle information display" (P. 97).

For additional information, see "Rear Door Alert" (P. 155).

Check Rear Seat Alert is activated

When the system is enabled, this message appears when the Rear Door Alert system is active and can remind the driver to check the back seat.

- Using the steering wheel switch, a driver can select "Dismiss Message" to clear the display for a period of time. If no selection is made, this message automatically turns off after a period of time.
- Using the steering wheel switch, a driver can select "Disable Alert" to disable the horn alert for the remainder of the current trip.

WARNING

Selecting "Dismiss Message" during a stop within a trip temporarily dismisses the message for that stop without turning the system off. Alerts can be provided for other stops during the trip. Selecting "Disable Alert" turns off the Rear Door Alert system for the remainder of a trip and no audible alert will be provided.

NOTE:

This system is disabled until a driver enables it using the vehicle information display. For additional information, see "How to use the vehicle information display" (P. 97).

For additional information, see "Rear Door Alert" (P. 155).

Door/liftgate Open

This warning appears when a door or the liftgate has been opened.

Drive Mode Selector indicator

When a driving mode is selected using the Drive Mode Selector, the selected mode indicator is displayed below the gear position information.

- STANDARD
- ECO
- SPORT

For additional information, see "Drive Mode Selector" (P. 297).

Electric shift control system indicator

This indicator appears when a malfunction occurs in the electric shift control system. When the master warning indicator appears, the chime sounds and the following message is displayed in the vehicle information display: "When parked apply parking brake".

When the ignition is placed in the OFF position, the chime sounds continuously. Ensure the parking brake is applied

Have the system checked. It is recommended that you visit a NISSAN dealer for this service.

Headlight System Error: See Owner's Manual

This warning appears when the LED headlights are not functioning properly.

If this warning appears, have your system checked. It is recommended that you visit a NISSAN dealer for this service.

Low Fuel

This warning appears when the fuel level in the fuel tank is getting low. Refuel as soon as it is convenient, preferably before the fuel gauge reaches 0 (Empty). **There will be a small reserve of fuel in the tank when the fuel gauge needle reaches 0 (Empty).**

Low Outside Temperature

This warning appears if the outside temperature is below 37°F (3°C). The temperature can be changed to display in Celsius or Fahrenheit. For additional information, see "Settings" (P. 107).

Low Washer Fluid

This warning appears when the windshield-washer fluid is at a low level. Add windshield-washer fluid as necessary. For additional information, see "Windshield-washer fluid" (P. 495).

Neutral Hold Mode has been activated

This message appears when the Neutral hold mode is activated. To exit the Neutral hold mode, place the vehicle in any other shift position other than N (Neutral). For additional information, see "Neutral hold mode function" (P. 288).

Neutral Hold Mode was not activated

This message appears when the Neutral hold mode is unavailable. To activate the Neutral hold mode, wait for a while without shifting and then perform the operations again. For additional information, see "Neutral hold mode function" (P. 288).

Neutral Hold Mode guidance

The "To Exit Vehicle in Neutral; Engine ON, Brake ON Push P, shift into N twice" message appears when the shift position is in the N (Neutral) position (Neutral hold mode is available). For additional information, see "Neutral hold mode function" (P. 288).

Power will turn off to save the battery

This message appears in the vehicle information display after a period of time if the ignition switch is in the ACC or the ON position and if the vehicle is in P (Park). For additional information, see "Push-button ignition switch positions" (P. 280).

Power turned off to save the battery

This message appears after the ignition switch is automatically turned to off. For additional information, see "Push-button ignition switch positions" (P. 280)

Press Brake Pedal

This warning appears in the following situations:

- The driver tries to release the electronic parking brake manually without depressing the brake pedal.

Press brake pedal to prevent rolling

This warning appears in the following situations:

- The vehicle is stopped on a steep hill and there is a possibility of moving backward, even if the electronic parking brake is applied.
- This warning appears and chime sounds if the vehicle moves while the automatic brake hold function is activated. Apply the foot brake to stop the vehicle moving.

Press brake to operate switch

This indicator appears if the automatic brake hold switch is pushed without depressing the brake pedal while the automatic brake hold function is activated. Depress the brake pedal and push the switch to deactivate the automatic brake hold function.

For additional information, see "Automatic brake hold" (P. 294).

Push brake and start switch to drive

This indicator appears when the shift position is in the P (Park) position.

This indicator also appears when the vehicle has been started using the Remote Engine Start (if so equipped) function.

This indicator means that the engine will start by pushing the ignition switch with the brake pedal depressed. You can start the engine from any position of the ignition switch.

Display with rear seats only

Rear seat belt warning

- ☒ : **Red seat**: The corresponding seat belt is not fastened.
- ☑ : **Green seat**: The corresponding seat belt is fastened.
- This warning includes display of the seat belts for rear seating positions only. Rear seat belts that are unfastened will appear red.
- If any rear seat belts are unfastened when the ignition switch is placed in the ON position, this warning will display for over 1 minute.
- When a rear seat belt is changed from fastened to unfastened, this warning will display for over 1 minute, and the seat belt warning light will turn ON.
- If the vehicle is driven above a certain speed during or after the rear seat belt buckle status change, this warning will display, the seat belt warning light will blink, and the chime will sound for over 1 minute. During this time, the warning and chime cannot be dismissed unless the rear seat belt is fastened again. Once the seat belt warning light and chime for the rear seat belt conditions have turned off, the display will also turn off.

NOTE:

- **Opening and closing a rear door while stopped will reset this warning, similar to pushing the ignition switch to ON again.**

Release Parking Brake

This warning appears in the message area of the vehicle information display when the parking brake is set and the vehicle is driven.

Reminder: Turn OFF Headlights

This warning appears when the headlights are left in the ON position when exiting the vehicle. Place the headlight switch in the OFF or AUTO position. For additional information, see "Headlight and turn signal switch" (P. 136).

Shipping Mode On Push Storage Fuse

This warning may appear if the extended storage switch is not pushed in. When this warning appears, push in the extended storage switch to turn off the warning. For additional information, see "Extended storage switch" (P. 159).

Steep Slope Apply foot brake

This indicator appears, and chime sounds if the "Caution Steep slope" has appeared over about 3 minutes. Then the parking brake will automatically be applied and the

braking force of the automatic brake hold function will be released, and the vehicle may move or roll away unexpectedly. Apply the foot brake to stop the vehicle moving.

For additional information, see "Automatic brake hold" (P. 294).

Tire Pressure Low - Add Air

This warning appears when the low tire pressure warning light in the meter illuminates and low tire pressure is detected. The warning appears each time the ignition switch is placed in the ON position as long as the low tire pressure warning light remains illuminated. If this warning appears, stop the vehicle and adjust the tire pressures of all four tires to the recommended COLD tire pressure shown on the Tire and Loading Information label. For additional information, see "Low tire pressure warning light" (P. 92) and "Tire Pressure Monitoring System (TPMS)" (P. 271).

Transmission Shift Position indicator

This indicator shows the transmission shift position. When selecting a gear from the shift switches, the selected gear will be displayed. If using the paddle shifters to engage manual shift mode, the shift range will be displayed.

When parked apply parking brake

This message appears when a malfunction occurs in the electric shift control system below 5 mph (8 km/h).

Have the system checked. It is recommended that you visit a NISSAN dealer for this service.

AWD Error: See Owner's Manual

AWD

This warning appears when the all-wheel drive system is not functioning properly while the engine is running.

AWD High Temp. Stop Vehicle

AWD

This warning may appear while trying to free a stuck vehicle due to increased oil temperature. The driving mode may change to 2-Wheel Drive (2WD). If this warning is displayed, stop the vehicle with the engine idling, as soon as it is safe to do so. Then if the warning turns off, you can continue driving.

Tire Size Incorrect: See Owner's Manual

AWD

This warning may appear if there is a large difference between the diameters of the front and rear wheels. Pull off the road in a safe area, with the engine idling. Check that all the tire sizes are the same, that the tire pressure is correct and that the tires are not excessively worn.

Automatic Emergency Braking (AEB) with Pedestrian Detection emergency warning indicator

This indicator appears along with an audible warning, when the system detects the possibility of a forward collision.

For additional information, see "Automatic Emergency Braking (AEB) with Pedestrian Detection" (P. 397).

Blind Spot Warning (BSW)/ Intelligent Blind Spot Intervention (I-BSI) indicator

This indicator appears when the BSW and/or I-BSI systems are engaged.

This indicator also appears when the I-BSI system is unavailable.

For additional information, see "Blind Spot Warning (BSW)" (P. 315) or "Intelligent Blind Spot Intervention (I-BSI)" (P. 325).

Cruise control indicator

This indicator shows the cruise control system status.

When cruise control is activated, a green circle will illuminate to indicate it is set. The vehicle information display will also display the speed the cruise control was set at. If you accelerate past the set speed, the speed will blink until you either cancel cruise control or go back to the set speed. If cruise control is on and canceled, the speed will be displayed to show the speed the vehicle will return to if the resume button is activated.

Currently Unavailable

This message may appear when the ProPILOT Assist system, Intelligent Blind Spot Intervention (I-BSI) or the Intelligent Lane Intervention (I-LI) system is engaged.

Under the following conditions, the ProPILOT Assist, Intelligent Blind Spot Intervention (I-BSI) or the Intelligent Lane Intervention (I-LI) system is automatically canceled:

- When the VDC system is turned off

The above system cannot be used in some situations (VDC operates, wheel slip and VDC system is off.)

Driver Alertness - Take a Break?

This alert appears when the Intelligent Driver Alertness (I-DA) system has detected that the driver may be displaying fatigue or a lack of attention. For additional information, see "Intelligent Driver Alertness (I-DA)" (P. 422).

Driving Aids temporarily limited

This message appears when the Automatic Emergency Braking (AEB) with Pedestrian Detection systems check is not completed correctly or when the vehicle is being towed.

All forward driving aids may be temporarily limited or disabled.

For additional information, see:

- Automatic Emergency Braking (AEB) with Pedestrian Detection (P. 397)
- ProPILOT Assist Systems (P. 344)
- Intelligent Forward Collision Warning (I-FCW) (P. 411)
- Intelligent Cruise Control (ICC) (P. 362)
- Intelligent Lane Intervention (I-LI) (P. 309)

Driving Aids Temporarily disabled Clean sensor area See Owner's Manual

This message appears when the front radar sensor may be obstructed due to:

- mud, dirt, snow, ice, etc.
- inclement weather (rain, fog, snow, etc.)

All forward driving aids are temporarily disabled until the system detects that the front radar sensor is no longer obstructed.

For additional information, see the following (if so equipped):

- Automatic Emergency Braking (AEB) with Pedestrian Detection (P. 397)
- ProPILOT Assist Systems(P. 344)
- Intelligent Forward Collision Warning (I-FCW) (P. 411)

Driving Aids Temporarily limited Front Camera Too Hot

This message appears when the camera detects an interior temperature of more than 104°F (40°C).

All forward driving aids may be temporarily limited or disabled until the system detects that the front camera has cooled.

For additional information, see:

- Automatic Emergency Braking (AEB) with Pedestrian Detection (P. 397)
- ProPILOT Assist Systems (P. 344)
- Intelligent Forward Collision Warning (I-FCW) (P. 411)
- Intelligent Cruise Control (ICC) (P. 362)
- Intelligent Lane Intervention (I-LI) (P. 309)

Driving Aids Temporarily limited Poor Visibility

This message may appear when the Steering Assist system is engaged.

Under the following conditions, the Steering Assist system may be limited or cancelled:

- When the wiper (HI) operates.
- When lane markers in the traveling lane cannot be correctly detected for a period of time due to such items as a snow rut, reflection of light on a rainy day or several unclear lane markers are present.
- Strong light, such as sunlight or high beams from oncoming vehicles, enter the front camera

The system will be available when the above conditions no longer exist.

If the warning message continues to appear, stop the vehicle in a safe location, turn the engine off, and clean the windshield.

Driving Aids Temporarily limited Radar interference

This message appears when the front radar sensor may be experiencing radio wave interference.

All forward driving aids may be temporarily limited or disabled until the system detects that the front radar sensor is no longer experiencing interference.

For additional information, see:

- Automatic Emergency Braking (AEB) with Pedestrian Detection (P. 397)
- ProPILOT Assist Systems (P. 344)
- Intelligent Forward Collision Warning (I-FCW) (P. 411)
- Intelligent Cruise Control (ICC) (P. 362)
- Intelligent Lane Intervention (I-LI) (P. 309)

Limited driver's aid VDC Setting OFF

This message appears when the Vehicle Dynamic Control (VDC) system is off.

All forward driving aids may be temporarily limited or disabled.

For additional information, see:

- Automatic Emergency Braking (AEB) with Pedestrian Detection (P. 397)
- ProPILOT Assist Systems (P. 344)
- Intelligent Forward Collision Warning (I-FCW) (P. 411)
- Intelligent Cruise Control (ICC) (P. 362)
- Intelligent Lane Intervention (I-LI) (P. 309)
- Vehicle Dynamic Control (VDC) system (P. 434)

Forward Driving Aids temporarily disabled Front Sensor blocked See Owner's Manual

This message appears when the front radar sensor may be obstructed due to:

- mud, dirt, snow, ice, etc.
- inclement weather (rain, fog, snow, etc.).

All forward driving aids are temporarily disabled until the system detects that the front radar sensor is no longer obstructed.

For additional information, see:

- Automatic Emergency Braking (AEB) with Pedestrian Detection (P. 397)
- ProPILOT Assist Systems (P. 344)
- Intelligent Forward Collision Warning (I-FCW) (P. 411)

Hands on detection warning / Take Steering Control / Slowing to Stop

These warnings appear when the Steering Assist system is engaged and the following condition(s) occur:

- When not holding the steering wheel
- When there is no steering wheel operation

Hold onto the steering wheel immediately. When the steering operation is detected, the warning turns off and the Steering Assist function is automatically restored.

For additional information, see "ProPILOT Assist Systems" (P. 344) or "Steering Assist" (P. 378) .

Idling Stop System

This indicator shows the Idling Stop System status.

For addition information, see "Idling Stop System" (P. 445).

Intelligent Lane Intervention (I-LI)/Intelligent Blind Spot Intervention (I-BSI)/ProPILOT Assist status indicator

This indicator shows when the I-LI, I-BSI or ProPILOT Assist system is engaged.

For additional information, see "Intelligent Lane Intervention (I-LI)" (P. 309), "Intelligent Blind Spot Intervention (I-BSI)" (P. 325) or "ProPILOT Assist Systems" (P. 344).

Lane Departure Warning (LDW)/ Intelligent Lane Intervention (I-LI) indicator

This indicator appears when the LDW and/or Intelligent Lane Intervention (I-LI) systems are engaged.

For additional information, see "Lane Departure Warning (LDW)" (P. 304) and "Intelligent Lane Intervention (I-LI)" (P. 309).

Malfunction See Owner's Manual

This warning appears when the Intelligent Driver Alertness (I-DA) system is not functioning properly. For additional information, see "Intelligent Driver Alertness (I-DA)" (P. 422).

Malfunction See Owner's Manual

This warning appears when one or more of the following systems (if so equipped) is not functioning properly:

- Automatic Emergency Braking (AEB) with Pedestrian Detection
- Blind Spot Warning (BSW)
- Intelligent Blind Spot Intervention (I-BSI)
- Intelligent Forward Collision Warning (I-FCW)
- Intelligent Lane Intervention (I-LI)
- Lane Departure Warning (LDW)
- ProPILOT Assist
- Rear Automatic Braking (RAB)
- Rear Cross Traffic Alert (RCTA)
- Traffic Sign Recognition (TSR)

If one or more of these warning appears, have the system checked. It is recommended that you visit a NISSAN dealer for this service.

Only Available with Cruise Control ON

This message appears when the Steering Assist switch has been pushed while the cruise control is not switched on.

For additional information, see "Intelligent Cruise Control (ICC)" (P. 362) and "Steering Assist" (P. 378).

Parking Sensor

This indicator appears when the sensor is activated. Pressing the ◀▶ button while the sonar screen is displayed will dismiss this message until the next time the sensors are activated. The Parking Sensor system will remain on, unless it is disabled in the vehicle information display. For additional information, see "Front and rear sonar system" (P. 439).

Parking Sensor Error: See Owner's Manual

This warning appears when there is an error with the system. For additional information, see "Front and rear sonar system" (P. 439).

Parking Sensor Temporarily disabled

This warning appears when the sonar system detects a blockage. For additional information, see "Front and rear sonar system" (P. 439).

ProPILOT Assist indicators

These indicators show the ProPILOT Assist system status. The status is shown by color. For additional information, see "ProPILOT Assist Systems" (P. 344).

Rear Automatic Braking (RAB) system indicator

This indicator appears to indicate the status of the Rear Automatic Braking (RAB) system. For additional information, see "Rear Automatic Braking (RAB)" (P. 392).

Rear Automatic Braking (RAB) system indicator

This indicator flashes in red and white alternately when the RAB system is activating. For additional information, see "Rear Automatic Braking (RAB)" (P. 392).

Speed Limit Sign indicator

This indicator may appear when the Traffic Sign Recognition system is engaged.

For additional information, see "Traffic Sign Recognition" (P. 301).

Time for a break?

This indicator appears when the driver enables the timer alert function within the driver assistance settings and the selected set time is expired. The time is based on ignition on time and can be set up to six hours.

Steering Assist Not Available Cannot Detect Lane

This indicator may appear when the Steering Assist system is engaged. The Steering Assist system is automatically canceled when the lane markers in the traveling lane cannot be correctly detected for a period of time due to such items as a snow rut, reflection of light on a rainy day or several unclear lane markers are present.

If you want to use the Steering Assist system again, cancel the ProPILOT Assist system and set it again when lane markers are clearly visible, or push the Steering Assist switch once.

Steering Assist OFF

This indicator appears when the Steering Assist system is turned off.

For additional information, see "Intelligent Cruise Control (ICC)" (P. 362) and "Steering Assist" (P. 378).

Steering Assist ON

This indicator appears when the Steering Assist system is turned on.

For additional information, see "Intelligent Cruise Control (ICC)" (P. 362) and "Steering Assist" (P. 378).

Steering Assist status

This indicator appears when the Steering Assist system is engaged.

For additional information, see "ProPILOT Assist Systems" (P. 344).

Step on Brake Now

This message may appear when the Intelligent Cruise Control (ICC) (with ProPILOT Assist) system is engaged and the following condition occurs:

- While the vehicle is stopped by the ProPILOT Assist, the driver's door is opened but the electronic parking brake was not activated.

Step on the brake pedal immediately.

Unavailable Adverse Weather

This message may appear when the Steering Assist system is engaged.

Under the following conditions, the Steering Assist system is automatically canceled:

- When the wiper (HI) operates.
- When lane markers in the traveling lane cannot be correctly detected for a period of time due to such items as a snow rut, reflection of light on a rainy day or several unclear lane markers are present.

If you want to use the Steering Assist system again, cancel the ProPILOT Assist system and set it again when lane markers are clearly visible, or push the Steering Assist switch once.

Unavailable: Camera Temperature High

This message appears when the camera detects an interior temperature of more than 104°F (40°C). For additional information, see "ProPILOT Assist Systems" (P. 344), "Intelligent Lane Intervention (I-LI)" (P. 309), "Lane Departure Warning (LDW)" (P. 304) or "Intelligent Blind Spot Intervention (I-BSI)" (P. 325).

Unavailable Low Visibility

This message may appear when the Steering Assist system is engaged.

Under the following condition, the Steering Assist system is automatically canceled:

- The camera area of the windshield is fogged up or covered with dirt, water drops, ice, snow, etc.
- The camera received strong light, such as sunlight, high beam of an oncoming vehicle, etc. For additional information, see "ProPILOT Assist Systems" (P. 344).

Unavailable Parking Brake is On

This message may appear when the ProPILOT Assist system is engaged.

Under the following condition, the ProPILOT Assist system is automatically canceled:

- The electronic parking brake is applied.

The above system cannot be used when the electronic parking is activated.

For additional information, see "ProPILOT Assist Systems" (P. 344) and "Parking brake" (P. 292).

Unavailable Seatbelt is Unfastened

This message may appear when the ProPILOT Assist system is engaged.

Under the following condition, the ProPILOT Assist system is automatically canceled:

- When the driver's seat belt is not fastened

The above system cannot be used when the driver's seat belt is not fastened.

Unavailable: Side Radar Obstruction

This message appears when the Blind Spot Warning (BSW), Intelligent Blind Spot Intervention (I-BSI), or Rear Cross Traffic Alert (RCTA) systems become unavailable because a radar blockage is detected. For additional information, see "Blind Spot Warning (BSW)" (P. 315), "Intelligent Blind Spot Intervention (I-BSI)" (P. 325) or "Rear Cross Traffic Alert (RCTA)" (P. 336).

Unavailable Slippery Road

This message may appear when the ProPILOT Assist system, Intelligent Blind Spot Intervention (I-BSI) or the Intelligent Lane Intervention (I-LI) system is engaged.

Under the following conditions, the ProPILOT Assist system, Intelligent Blind Spot Intervention (I-BSI) or the Intelligent Lane Intervention (I-LI) system is automatically canceled:

- When the VDC system operates
- When a wheel slips

The above system cannot be used in some situations (VDC operates, wheel slip and VDC system is off.)

Vehicle ahead detection indicator

This indicator shows when the following systems are engaged and have detected a vehicle:

- Automatic Emergency Braking (AEB) with Pedestrian Detection
- Intelligent Forward Collision Warning (I-FCW)
- ProPILOT Assist

For additional information, see "Automatic Emergency Braking (AEB) with Pedestrian Detection" (P. 397), "Intelligent Forward Collision Warning (I-FCW)" (P. 411), or "ProPILOT Assist Systems" (P. 344).

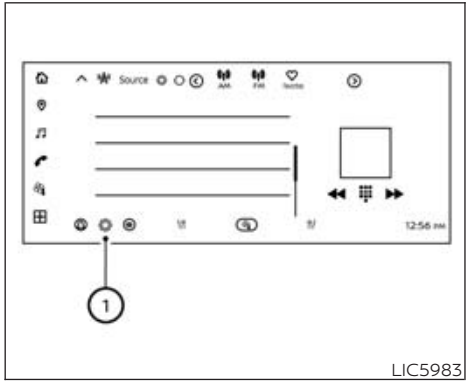

LIC5983

BASIC INFORMATION

Some of the vehicle equipment/features can be operated using the touch-screen display.

Touch the Settings soft key ① on the touch-screen display to display "All Settings" menu.

Touch to select your desired item.

Available setting items vary depending on models, specifications, software versions, and conditions.

See the following items for the vehicle-related equipment/features.

For additional information, see the separate NissanConnect® Owner's Manual.

VEHICLE

Camera

The following items for the camera can be adjusted or turned on or off.

For additional information, see "Intelligent Around View® Monitor" (P. 233).

- Display Settings
- Save locations
- Automatic 360° Moving
- Vehicle Color

Climate

The following items for the climate can be adjusted or turned on or off.

For additional information, see "Heater and air conditioner (automatic)" (P. 255).

- Airflow Intensity
- Auto Recirculation
- Defrost Activates Front & Rear
- Heated Steering Wheel Sensitivity
- Driver Auto Seat Sensitivity
- Passenger Auto Seat Sensitivity

Seat

The following items for the seat can be adjusted or turned on or off.

For additional information, see "Seats" (P. 12) and "Seat massage switch" (P. 147).

- Massage Settings

Interior Light

The following items for the interior light can be adjusted or turned on or off.

For additional information, see "Interior lights" (P. 174).

- Ambient Lighting

  (Locations)
  – Front
  – Rear

  (Colors)
  – ProPILOT Assist Mode
  – Delight
  – Discovery
  – Passion
  – Harmony

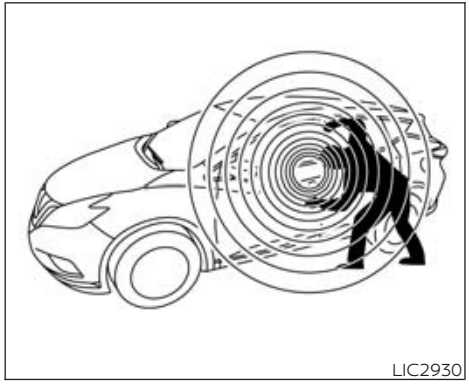
LIC2930

BASIC INFORMATION

Your vehicle has two types of security systems:

- Vehicle security system
- NISSAN Vehicle Immobilizer System

VEHICLE SECURITY SYSTEM

Basic Information

The vehicle security system provides visual and audible alarm signals if someone opens the doors, liftgate or the hood when the system is armed. It is not, however, a motion detection type system that activates when a vehicle is moved or when a vibration occurs.

The system helps deter vehicle theft but cannot prevent it, nor can it prevent the theft of interior or exterior vehicle components in all situations. Always secure your vehicle even if parking for a brief period. Never leave your Intelligent Key in the vehicle, and always lock the vehicle when unattended. Be aware of your surroundings, and park in secure, well-lit areas whenever possible.

Many devices offering additional protection, such as component locks, identification markers, and tracking systems, are available at auto supply stores and specialty shops. A NISSAN dealer may also offer such equipment. Check with your insurance company to see if you may be eligible for discounts for various theft protection features.

How to arm the vehicle security system

1. Close all windows and the moonroof (if so equipped). **The system can be armed even if the windows and moonroof are open.**
2. Remove the Intelligent Key from the vehicle.
3. Close all doors, hood and liftgate. Lock all doors. The doors can be locked with the Intelligent Key, door handle request switch or power door lock switch.

   Key fob operation:
   If during the pre-armed phase one of the following occurs, the system will not arm:

- A door is opened with the release button with the Intelligent Key on your person.
- The doors are unlocked using the unlock button on the Intelligent Key.
- The ignition switch is placed in the AUTO ACC or ON position.
- **Even when the driver and/or passengers are in the vehicle, the system will activate when all the doors, hood and liftgate are locked with the ignition switch placed in the LOCK position. When placing the ignition switch in the AUTO ACC or ON position, the system will be released.**

Vehicle security system activation

The vehicle security system will give the following alarm:

- The turn signals blink and the horn sounds intermittently.
- The alarm automatically turns off after a period of time. However, the alarm reactivates if the vehicle is tampered with again. The alarm can be shut off by unlocking the driver's door or liftgate by pressing the button on the Intelligent Key.

The alarm is activated by:

- Opening the door or liftgate without using the Intelligent Key (even if the door is unlocked by releasing the door inside lock switch).

How to stop an activated alarm

The alarm stops only by unlocking the driver's door or the liftgate by pressing the button on the Intelligent Key or pushing the request switch on the driver's or passenger's door with the Intelligent Key in range of the door handle.

NISSAN VEHICLE IMMOBILIZER SYSTEM

Basic Information

The NISSAN Vehicle Immobilizer System will not allow the engine to start without the use of a registered key.

Never leave these keys in the vehicle.

FCC Notice:

For USA:

This device complies with Part 15 of the FCC Rules. Operation is subject to the following two conditions: (1) This device may not cause harmful interference, and (2) this device must accept any interference received, including interference that may cause undesired operation.

NOTE:

Changes or modifications not expressly approved by the party responsible for compliance could void the user's authority to operate the equipment.

For Canada:

This device contains licence-exempt transmitter(s)/receiver(s) that comply with Innovation, Science and Economic Development Canada's licence-exempt RSS(s). Operation is subject to the following two conditions: (1) This device may not cause interference. (2) This device must accept any interference, including interference that may cause undesired operation of the device.

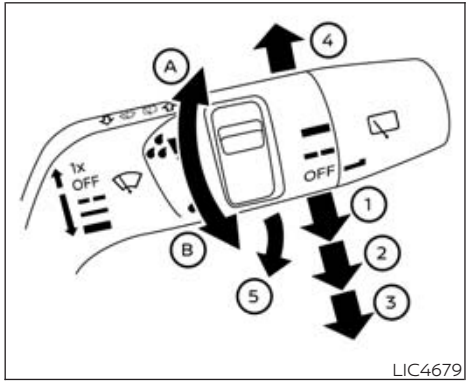

Type A (if so equipped)

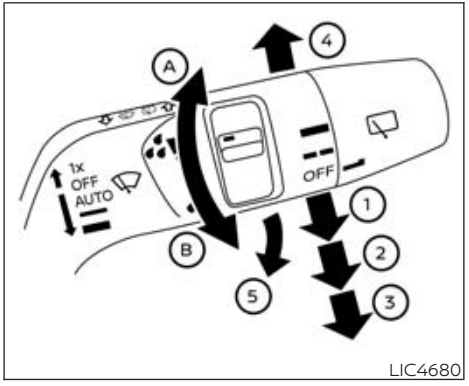

Type B (if so equipped)

SWITCH OPERATION

WARNING

In freezing temperatures the washer solution may freeze on the windshield and obscure your vision which may lead to an accident. Warm the windshield with the defroster before you wash the windshield.

CAUTION

- **Do not operate the washer continuously for more than 30 seconds.**
- **Do not operate the washer if the windshield-washer fluid reservoir is empty.**
- **Do not fill the windshield-washer fluid reservoir with windshield-washer fluid concentrates at full strength. Some methyl alcohol based windshield-washer fluid concentrates may permanently stain the grille if spilled while filling the windshield-washer fluid reservoir.**
- **Pre-mix windshield-washer fluid concentrates with water to the manufacturer's recommended levels before pouring the fluid into the windshield-washer fluid reservoir. Do not use the windshield-washer fluid reservoir to mix the windshield-washer fluid concentrate and water.**

NOTE:

If the windshield wiper operation is interrupted by snow or ice, the wiper may stop moving to protect its motor. If this occurs, turn the wiper switch to the OFF position and remove the snow or ice that is on and around the wiper arms. In approximately 1 minute, turn the switch on again to operate the wiper.

The windshield wiper and washer operate when the ignition switch is in the ON position.

Push the lever down to operate the wiper at the following speed:

① Intermittent (INT) — intermittent operation can be adjusted by turning the knob toward Ⓐ (slower) or Ⓑ (faster). Also, the intermittent operation speed varies in accordance with the vehicle speed (if so equipped). (For example, when the vehicle speed is high, the intermittent operation speed will be faster.)

② Low (LO) — continuous low speed operation

③ High (HI) — continuous high speed operation

Push the lever up ④ to have one sweep operation (MIST) of the wiper.

Pull the lever toward you ⑤ to operate the washer. The wiper will also operate several times.

NOTE:

The Speed Dependent feature may be disabled. For additional information, see "Vehicle information display" (P. 97).

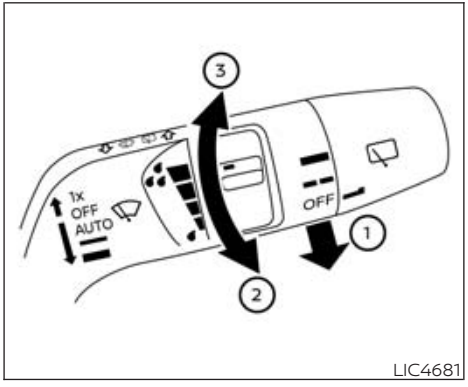

RAIN-SENSING AUTO WIPER SYSTEM (if so equipped)

⚠CAUTION

- **Do not touch the rain sensor and around it when the wiper switch is in the AUTO position and the ignition switch is in the ON position. The wipers may operate unexpectedly and cause an injury or may damage a wiper.**
- **The rain-sensing auto wipers are intended for use during rain. If the switch is left in the AUTO position, the wipers may operate unexpectedly when dirt, fingerprints, oil film or insects are stuck on or around the sensor. The wipers may also operate when exhaust gas or moisture affect the rain sensor.**
- **When the windshield glass is coated with water repellent, the speed of the rain-sensing auto wipers may be higher even though the amount of the rainfall is small.**
- **Be sure to turn off the rain-sensing auto wiper system when you use a car wash.**
- **The rain-sensing auto wipers may not operate if rain does not hit the rain sensor even if it is raining.**
- **Using Genuine NISSAN wiper blades is recommended for proper operation of the rain-sensing auto wiper system. For additional information, see "Windshield wiper blades" (P. 501).**

The rain-sensing auto wiper system can automatically turn on the wipers and adjust the wiper speed depending on the

rainfall and the vehicle speed by using the rain sensor located on the upper part of the windshield.

To set the rain-sensing auto wiper system, place the lever in the AUTO position ①. The wiper will sweep once while the ignition switch is in the ON position.

The rain sensor sensitivity level can be adjusted by turning the knob toward the rear ② (Low) or toward the front ③ (High).

- High — High sensitive operation
- Low — Low sensitive operation

To turn the rain-sensing auto wiper system off, rotate the lever to the OFF position, or rotate the lever to the low or high position.

The rain-sensing feature may be disabled. For additional information, see "Vehicle information display" (P. 97).

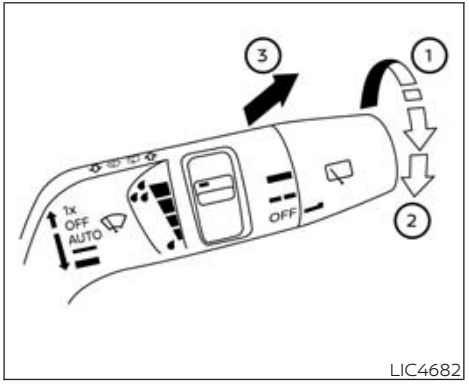

LIC4682

REAR SWITCH OPERATION

⚠WARNING

In freezing temperatures the washer solution may freeze on the rear window and obscure your vision which may lead to an accident. Warm the rear window with the defroster before you wash the rear window.

⚠CAUTION

- **Do not operate the washer continuously for more than 30 seconds.**
- **Do not operate the washer if the windshield-washer fluid reservoir is empty.**
- **Do not fill the windshield-washer fluid reservoir with windshield-washer fluid concentrates at full strength. Some methyl alcohol based windshield-washer fluid concentrates may permanently stain the grille if spilled while filling the windshield-washer fluid reservoir.**
- **Pre-mix windshield-washer fluid concentrates with water to the manufacturer's recommended levels before pouring the fluid into the windshield-washer fluid reservoir. Do not use the windshield-washer fluid reservoir to mix the windshield-washer fluid concentrate and water.**

If the rear window wiper operation is interrupted by snow, etc., the wiper may stop moving to protect its motor. If this occurs, turn the wiper switch to OFF and remove the snow, etc. on and around the wiper arms. After about 1 minute, turn the switch on again to operate the wiper.

The rear window wiper and washer operate when the ignition switch is in the ON position. Turn the switch clockwise from the OFF position to operate the wiper.

① Intermittent (INT) — intermittent operation (not adjustable)

② Low (ON) — continuous low speed operation

Push the switch forward ③ to operate the washer. The wiper will also operate several times.

Rear window wiper service position:

The rear wiper service position can be accessed by pushing the rear washer switch forward twice in under a second with the ignition switch in the OFF position. Push the switch forward again to return it to the normal operating position.

REAR WINDOW AND OUTSIDE MIRROR DEFROSTER SWITCH

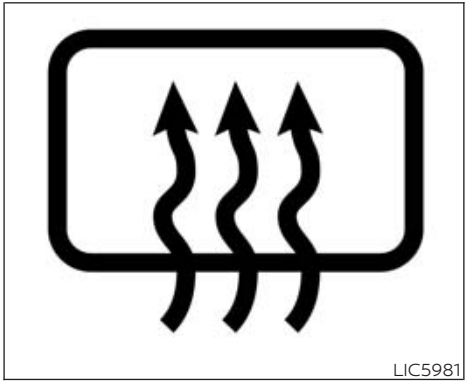

To defrost the rear window glass and outside mirrors, place the ignition switch in the ON position and push the rear window defroster switch on. Push the switch again to turn the defroster off.

The rear window defroster automatically turns off after approximately 20 minutes.

⚠ CAUTION

When cleaning the inner side of the rear window, be careful not to scratch or damage the rear window defroster.

WINDSHIELD DEICER (if so equipped)

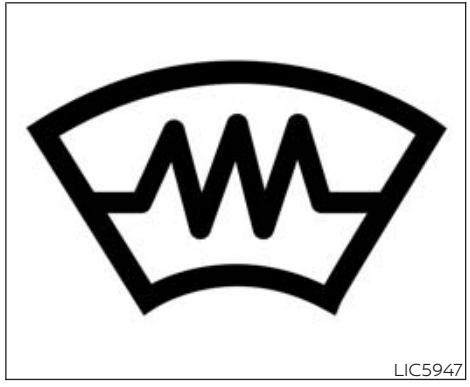

The windshield deicer operates when the push-button ignition switch is in the ON position and the engine is running.

The deicer is used to remove ice from the windshield when a wiper is frozen to the windshield. For maximum windshield clearing, it is recommended to activate the defroster as well.

To activate, touch the key on the touchscreen. The key will change color when activated. The deicer operates for approximately 15 minutes. After the preset time has passed, the deicer will turn off automatically. To turn off the deicer manually, touch the windshield deicer key.

NOTE:

The front windshield deicer may be unavailable immediately after the ignition switch is placed in the ON position. If this happens, wait a short period of time and then try to reactivate it. This is not a malfunction.

⚠CAUTION

- **When operating the deicer continuously, be sure to start the engine. Otherwise, it may cause the battery to discharge.**
- **When cleaning the inner side of the window, be careful not to scratch or damage the electrical conductors on the surface of the window.**

HEADLIGHT AND TURN SIGNAL SWITCH

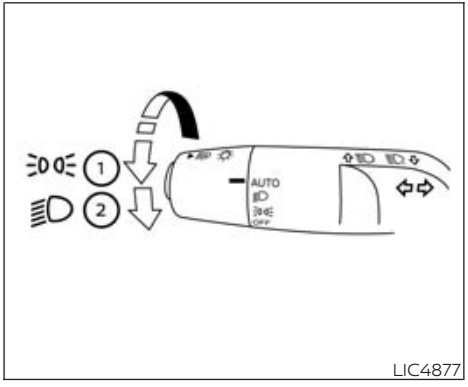

Type A (if so equipped)

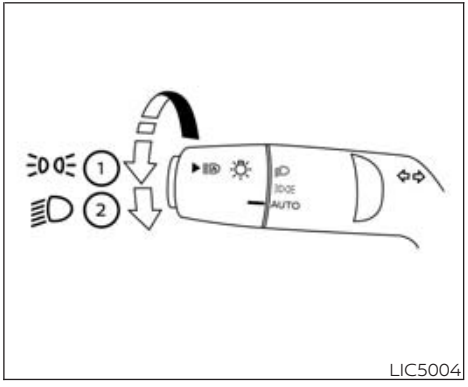

Type B (if so equipped)

HEADLIGHT CONTROL SWITCH

Basic Information

Lighting

① Rotate the switch to the position, and the front parking, tail, license plate, and instrument panel lights will come on.

② Rotate the switch to the position, and the headlights will come on and all the other lights remain on.

⚠CAUTION

Use the headlights with the engine running to avoid discharging the vehicle battery.

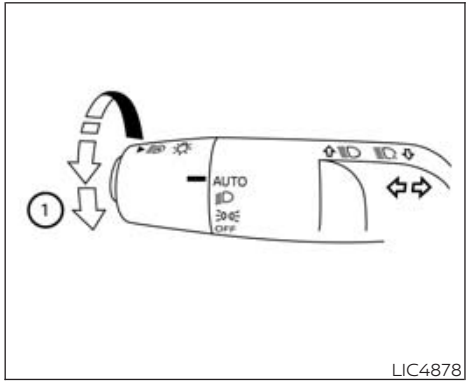

Type A (if so equipped)

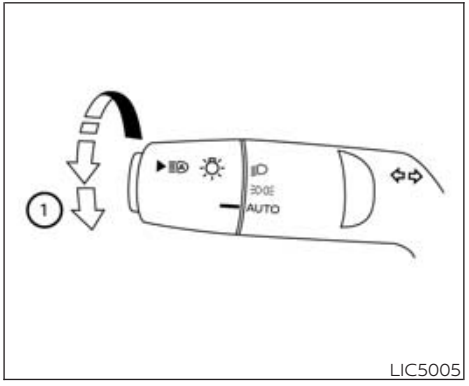

Type B (if so equipped)

Autolight system

The autolight system allows the headlights to turn on and off automatically. The autolight system can:

- Turn on the headlights, front parking, tail, license plate and instrument panel lights automatically when it is dark.
- Turn off all the lights (except daylight running lights) when it is light.
- Keep all the lights on for a period of time after you place the ignition switch in the OFF position and all doors are closed.

NOTE:

Autolight activation sensitivity and the time delay for autolight shutoff can be adjusted. For additional information, see "Vehicle information display" (P. 97).

To turn on the autolight system:

1. Turn the headlight switch to the AUTO position ①.
2. Place the ignition switch in the ON position.
3. The autolight system automatically turns the headlights on and off.

Initially, if the ignition switch is turned off and a door is opened and left open, the headlights remain on for a period of time. If another door is opened while the headlights are on, then the timer is reset.

To turn the autolight system off, turn the switch to the OFF (if so equipped), , or position.

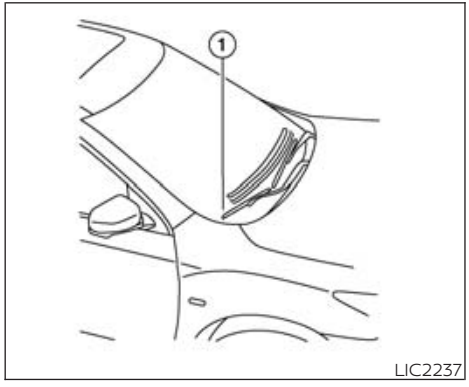

LIC2237

Be sure you do not put anything on top of the autolight sensor located in the top side ① of the instrument panel. The autolight sensor controls the autolight; if it is covered, the autolight sensor reacts as if it is dark out and the headlights will illuminate. If this occurs while parked with the engine off and the ignition switch placed in the ON position, your vehicle's battery could become discharged.

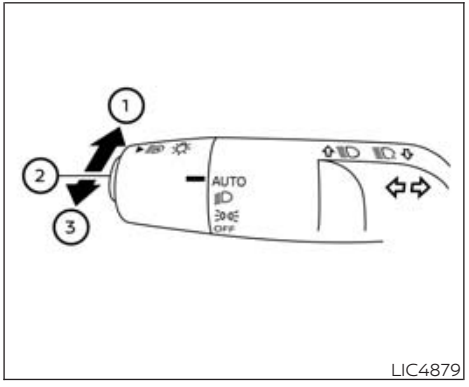

LIC4879

Headlight beam select

① To select the high beam function, push the lever forward while the low beams are on. The high beam lights come on and the indicator light illuminates.

② Pull the lever back to return to the low beams.

③ Pulling and releasing the lever flashes the headlight high beams on and off. The low beams do not need to be on for this to function.

High Beam Assist

Basic Information

The High Beam Assist system will operate when the vehicle is driven at speeds of approximately 25 mph (40 km/h) and above. If an oncoming vehicle or leading vehicle appears in front of your vehicle when the headlight high beam is on, the headlight will be switched to the low beam automatically.

⚠ WARNING

- **The High Beam Assist system is a convenience but it is not a substitute for safe driving operation. The driver should remain alert at all times, ensure safe driving practices and switch the high beams and low beam manually when necessary.**
- **The high beam or low beam may not switch automatically under the following conditions. Switch the high beam and low beam manually.**
  - **During bad weather (rain, fog, snow, wind, etc.).**
  - **When a light source similar to a headlight or tail light is in the vicinity of the vehicle.**

- **When the headlights of the oncoming vehicle or the leading vehicle are turned off, when the color of the light is affected due to foreign materials on the lights, or when the light beam is out of position.**
- **When there is a sudden, continuous change in brightness.**
- **When driving on a road that passes over rolling hills, or a road that has level differences.**
- **When driving on a road with many curves.**
- **When a sign or mirror-like surface is reflecting intense light towards the front of the vehicle.**
- **When the container, etc. being towed by a leading vehicle is reflecting intense light.**
- **When a headlight on your vehicle is damaged or dirty.**
- **When the vehicle is leaning at an angle due to a punctured tire, being towed, etc.**

- **The timing of switching the low beam and high beam may change under the following situations.**
  - **The brightness of the headlights of the oncoming vehicle or leading vehicle.**
  - **The movement and direction of the oncoming vehicle and the leading vehicle.**
  - **When only one light on the oncoming vehicle or the leading vehicle is illuminated.**
  - **When the oncoming vehicle or the leading vehicle is a two-wheeled vehicle.**
  - **Road conditions (incline, curve, the road surface, etc.).**
  - **The number of passengers and the amount of luggage.**

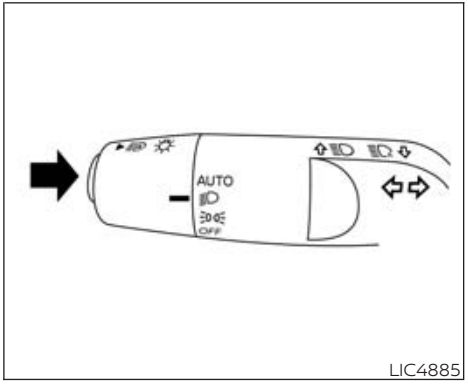

LIC4885

High Beam Assist operation

To activate the High Beam Assist system, turn the headlight switch to the AUTO position and push the switch as illustrated with the engine running. The High Beam Assist indicator light in the meter will illuminate while the headlights are turned on.

If the High Beam Assist indicator light does not illuminate in the above condition, it may indicate that the system is not functioning properly. Have the system checked, it is recommended that you visit a NISSAN dealer for this service.

When the vehicle speed lowers to less than approximately 16 mph (25 km/h), the headlight uses the low beam.

To turn off the High Beam Assist system, push the switch again.

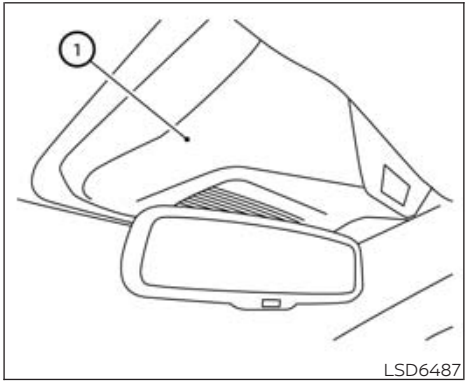

Ambient image sensor maintenance

The ambient image sensor ① for the High Beam Assist system is located in front of the inside mirror. To maintain the proper operation of the high beam assist system and prevent a system malfunction, be sure to observe the following:

- Always keep the windshield clean.
- Do not attach a sticker (including transparent material) or install an accessory near the ambient image sensor.
- Do not strike or damage the areas around the ambient image sensor. Do not touch the sensor lens that is located on the ambient image sensor.

If the ambient image sensor is damaged due to an accident, it is recommended that you visit a NISSAN dealer.

Battery saver system

The battery saver system automatically turns off the following lights after a period of time when the ignition switch is placed in the OFF position and the doors are closed:

- Headlights, when the headlight switch is in the or position
- Interior lights, when left in the ON position

After the headlights automatically turn off with the headlight switch in the or position, the headlights will illuminate again if the headlight switch is moved to the AUTO or OFF position and then turned to the or position.

⚠ CAUTION

Even though the battery saver feature automatically turns off the headlights after a period of time, you should turn the headlight switch to the AUTO or OFF position when the engine is not running to avoid discharging the vehicle battery.

LED DAYTIME RUNNING LIGHTS (DRL) SYSTEM

The LED DRL automatically illuminate at 100% intensity when the engine is started and the parking brake released. The LED Daytime Running Lights (DRL) operate with the headlight switch in any position. When you turn the headlight switch to the position for full illumination, the LED DRL illuminate at a lower intensity.

If the parking brake is applied before the engine is started, the LED DRL do not illuminate. The LED DRL illuminate when the parking brake is released. The LED DRL will remain on until the ignition switch is placed in the OFF position.

At dusk, the headlights, interior controls and switches will automatically illuminate if the headlight switch is in the AUTO position.

WARNING

When the LED DRL system is active, tail lights on your vehicle are not on. It is necessary at dusk to turn on your headlights. Failure to do so could cause an accident injuring yourself and others.

FRONT DECORATIVE LIGHT

The front decorative light mounted in the front bumper fascia illuminates under the following conditions:

- The ignition is in the ON position.
- The headlight switch is in the OFF or AUTO position.
- The parking brake is not applied.
- The turn signal is not activated on the same side.

WARNING

When the headlights are on, the front decorative light will switch to a reduced light output.

Turn the headlight switch to the position for full illumination when driving at night. The front decorative light is not a substitute for your vehicle's headlights.

WARNING

It is necessary at dusk to turn on your headlights. Failure to do so could cause an accident injuring yourself and others.

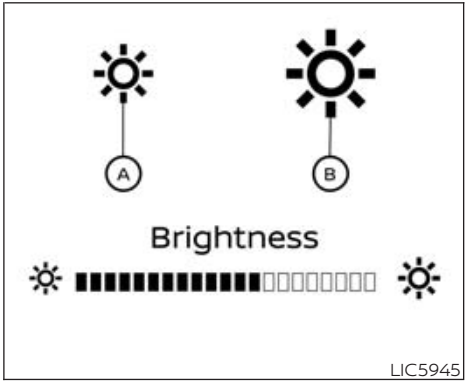

INSTRUMENT BRIGHTNESS CONTROL

Press the smaller icon Ⓐ to decrease the brightness of instrument panel lights.

Press the larger icon Ⓑ to increase the brightness of instrument panel lights.

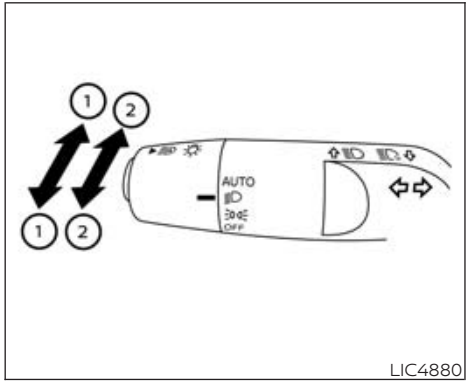

LIC4880

TURN SIGNAL SWITCH

Basic Information

Turn signal:

① Move the lever up or down to signal the turning direction. When the turn is completed, the turn signal cancels automatically.

Lane change signal:

② Move the lever up or down until the turn signal begins to flash, but the lever does not latch, to signal a lane change. Hold the lever until the lane change is completed. Move the lever up or down until the turn signal begins to flash, but the lever does not latch, and release the lever. The turn signal will automatically flash three times.

Choose the appropriate method to signal a lane change based on road and traffic conditions.

HORN

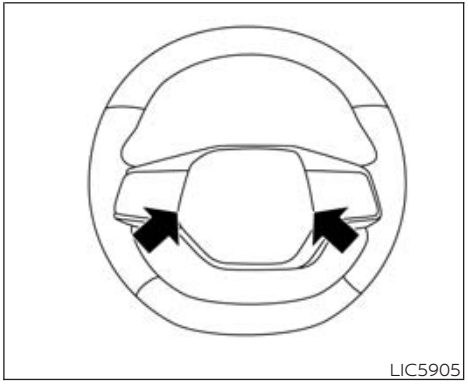
LIC5905

To sound the horn, push near the horn icon on the steering wheel.

⚠ WARNING

Do not disassemble the horn. Doing so could affect proper operation of the supplemental front air bag system. Tampering with the supplemental front air bag system may result in serious personal injury or death.

CLIMATE CONTROLLED SEAT SWITCHES (if so equipped)

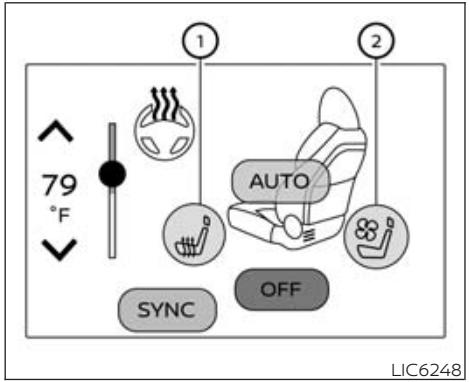

Driver Side

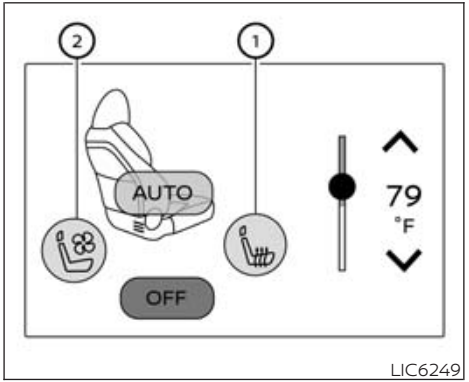

Passenger Side

The climate controlled seat warms up or cools down the front seat by blowing warm or cool air from under the surface of the seat.

The climate controlled seat can be operated using the center display as follows:

1. Place the ignition switch in the ON position.
2. Select the seat icon in the center display. Choose either the heated seat ① or the cooled seat ②.
3. Adjust the desired amount of air using the arrows in the center display. The climate controlled seat blower remains on low speed for approximately 60 seconds after turning the switch on or selecting the desired temperature.
4. When the vehicle's interior is warmed or cooled, or before you leave the vehicle, be sure to set the controls to the off position.

To check the air filter for the climate controlled seat, it is recommended that you visit a NISSAN dealer.

⚠WARNING

Do not use or allow occupants to use the climate controlled seats if you or the occupants cannot monitor seat temperatures or have an inability to feel pain in those body parts in contact with the seat. Use of the climate controlled seats by such people could result in serious injury.

⚠ CAUTION

- **The battery could run down if the climate control seat is operated while the engine is not running.**
- **Do not use the climate control seat for extended periods or when no one is using the seat.**
- **Do not put anything on the seat which insulates heat, such as a blanket, cushion, seat cover, etc. Otherwise, the seat may become overheated.**
- **Do not place anything hard or heavy on the seat or pierce it with a pin or similar objects. This may result in damage to the climate controlled seat.**
- **Any liquid spilled on the seat should be removed immediately with a dry cloth.**
- **The climate controlled seat has an air filter. Do not operate the climate controlled seat without an air filter. This may result in damage to the system.**
- **When cleaning the seat, never use gasoline, benzine, thinner, or any similar materials.**
- **If any malfunctions are found or the climate controlled seat does not operate, turn the switch off and have the system checked. It is recommended that you visit a NISSAN dealer for this service.**

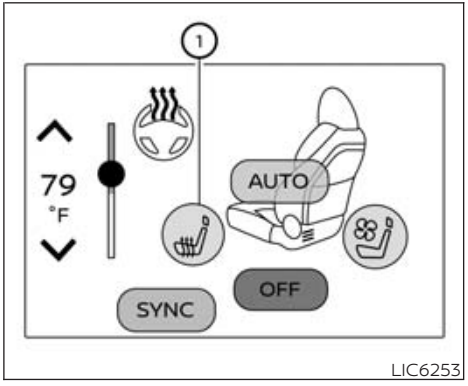

⚠ WARNING

Do not use or allow occupants to use the seat heater if you or the occupants cannot monitor elevated seat temperatures or have an inability to feel pain in those body parts in contact with the seat. Use of the seat heater by such people could result in serious injury.

⚠CAUTION

- **The battery could run down if the seat heater is operated while the engine is not running.**
- **Do not use the seat heater for extended periods or when no one is using the seat.**
- **Do not put anything on the seat which insulates heat, such as a blanket, cushion, seat cover, etc. Otherwise, the seat may become overheated.**
- **Do not place anything hard or heavy on the seat or pierce it with a pin or similar object. This may result in damage to the heater.**
- **Any liquid spilled on the heated seat should be removed immediately with a dry cloth.**
- **When cleaning the seat, never use gasoline, benzine, thinner, or any similar materials.**
- **If any malfunctions are found or the heated seat does not operate, turn the switch off and have the system checked. It is recommended that you visit a NISSAN dealer for this service.**

HEATED REAR SEAT SWITCHES (if so equipped)

The front seats are warmed by built-in heaters.

1. Place the ignition switch in the ON position.
2. Select the seat icon in the center display. Choose the heated seat ①.

   The heater is controlled by a thermostat, automatically turning the heater on and off.
3. Adjust the desired amount of heat using the heated seat ① in the center display. The temperature can also be controlled automatically. The system is controlled by a thermostat to maintain the temperature setting.
4. When the seat is warmed or before you leave the vehicle, be sure to set the controls to the off position.

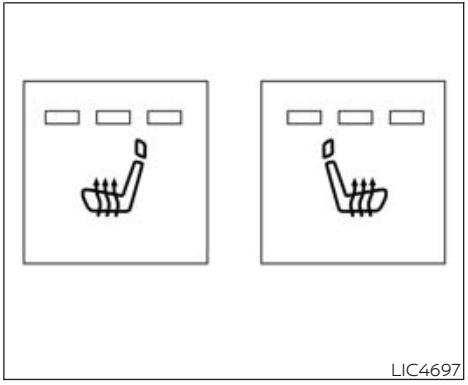

⚠WARNING

Do not use or allow occupants to use the seat heater if you or the occupants cannot monitor elevated seat temperatures or have an inability to feel pain in body parts that contact the seat. Use of the seat heater by such people could result in serious injury.

⚠ CAUTION

- **The battery could run down if the seat heater is operated while the engine is not running.**
- **Do not use the seat heater for extended periods or when no one is using the seat.**
- **Do not put anything on the seat which insulates heat, such as a blanket, cushion, seat cover, etc. Otherwise, the seat may become overheated.**
- **Do not place anything hard or heavy on the seat or pierce it with a pin or similar object. This may result in damage to the heater.**
- **Any liquid spilled on the heated seat should be removed immediately with a dry cloth.**
- **When cleaning the seat, never use gasoline, benzine, thinner, or any similar materials.**
- **If any malfunctions are found or the heated seat does not operate, turn the switch off and have the system checked. It is recommended that you visit a NISSAN dealer for this service.**

The rear seats are warmed by built-in heaters. The switches are located on the rear of the front center console and can be operated independently of each other.

1. Place the ignition switch in the ON position.
2. Push the LO or HI position of the switch, as desired. The indicator light in the switch will illuminate.

   The heater is controlled by a thermostat to maintain the temperature setting.
3. When the seat is warmed or before you leave the vehicle, be sure to turn the switch off.

HEATED STEERING WHEEL SWITCH (if so equipped)

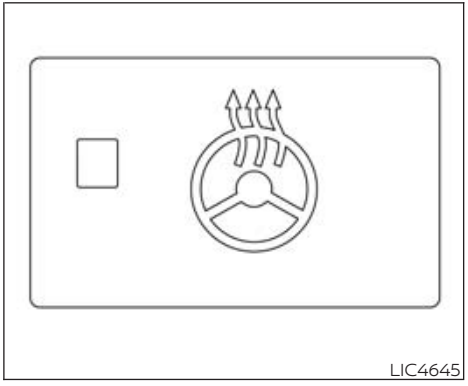

The heated steering wheel system is designed to operate only when the surface temperature of the steering wheel is below 68°F (20°C).

Push the heated steering wheel switch to warm the steering wheel after the ignition switch is placed in the ON position. The indicator light will come on.

If the surface temperature of the steering wheel is below 68°F (20°C), the system will heat the steering wheel and cycle off and on to maintain a temperature above 68°F (20°C). The indicator light will remain on as long as the system is on.

Push the switch again to turn the heated steering wheel system off manually. The indicator light will go off.

NOTE:

- **Once activated, your heated steering wheel will automatically turn on and off to maintain a temperature above 68˚F (20˚C).**
- **When the temperature of the steering wheel is above 122˚F (50˚C) and the heated steering wheel switch is turned on, the system will not heat the steering wheel. This does not indicate a malfunction.**

STEERING ASSIST SWITCH (for vehicles with ProPILOT Assist)

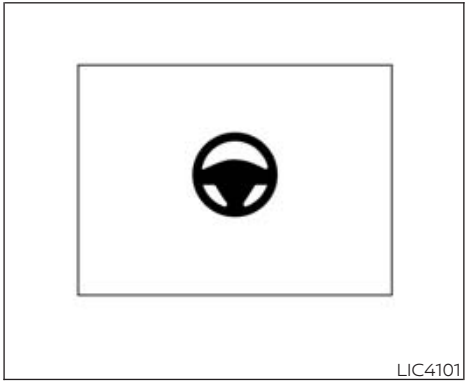

The Steering Assist switch is used to enable and disable the Steering Assist system that is activated using the settings menu of the vehicle information display.

The Steering Assist system controls the steering system, when ProPILOT Assist is engaged, to help keep your vehicle near the center of the lane when driving. For additional information, see "ProPILOT Assist Systems" (P. 344) and "Intelligent Lane Intervention (I-LI)" (P. 309).

SEAT MASSAGE SWITCH (if so equipped)

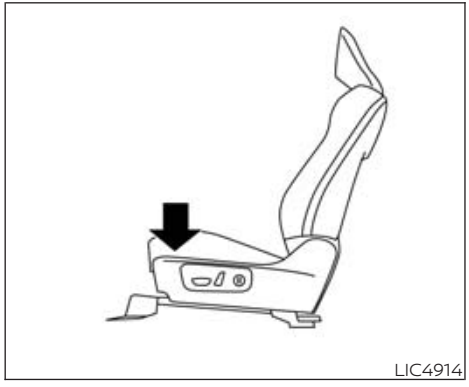

Push the seat massage switch or touch the seat massage icon in the center display to activate the feature. The center display will show the status of the massage system. Also in the center display, there is an "Adjust" icon that can be selected to change massage seat settings, including pattern, intensity and speed.

NOTE:

- **If the front passenger's door is open, the passenger's seat massage switch will not operate.**
- **When the front passenger door is opened, the system automatically deactivates the massage for the front passenger seat. The front passenger massage system must be reactivated using the switch after the front passenger door has been fully closed.**

HEAD UP DISPLAY (HUD) (if so equipped)

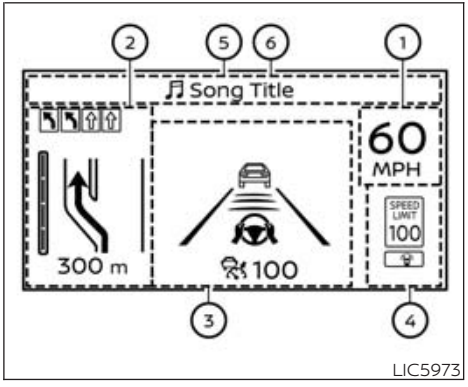

BASIC INFORMATION

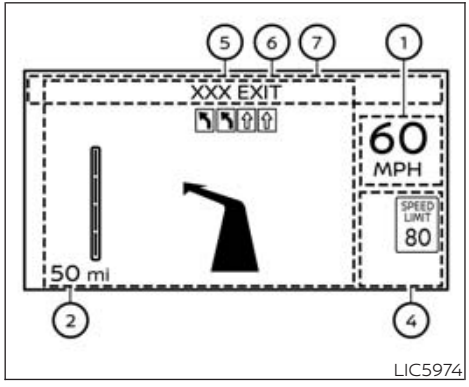

LIC5974

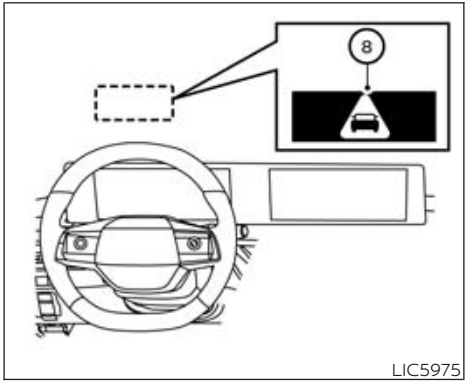

LIC5975

⚠WARNING

- **Failure to properly adjust the brightness and position of the displayed image may interfere with the driver's ability to see through the windshield which could cause an accident leading to severe injury or death.**
- **Do not use the head up display for extended periods of time as that can cause you to not see other vehicles, pedestrians or objects, which could cause an accident leading to severe injury or death.**

The HUD can display one or more of the following features (if so equipped):

① Vehicle speed

② Navigation

③ Driving Assist

④ Traffic Sign

⑤ Audio

⑥ TEL/SMS

⑦ Message for Driver Assistance

⑧ Warning message

NOTE:

- **Do not place any type of liquid on or near the projector. Doing so may cause malfunction of the equipment.**

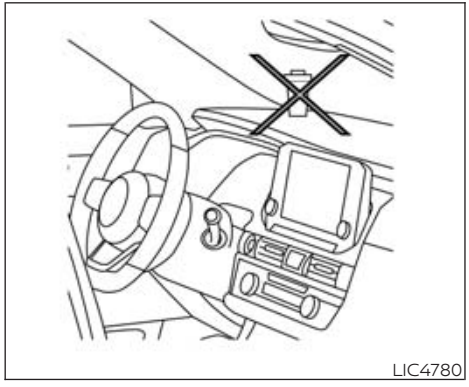
LIC4780

NOTE:

- **Do not touch any internal parts of the projector. Doing so may cause malfunction of the equipment.**
- **To prevent scratches to the projector glass, do not place any sharp objects on or near the projector opening.**
- **Do not place any objects on the instrument panel which may obstruct the display of the HUD.**
- **If you wear polarized sunglasses the display may be difficult to see. Increase the brightness of the HUD in the vehicle information display or remove your sunglasses.**
- **Depending on weather conditions (rain, snow, sunlight, etc.), the display may be difficult to see.**
- **For cleaning, use a dry soft clean cloth. If dirt, etc. cannot be removed, use a clean, soft cloth dampened with water and then use a clean, dry soft cloth. Never use a rough cloth, alcohol, benzine, thinner or any kind of solvent or paper towel with a chemical cleaning agent. They will scratch or cause discoloration to the projector lens. Do not spray any liquid such as water on the projector lens. Spraying liquid may cause the system to malfunction.**
- **If the displayed image appears distorted, it is recommended that you have the system checked by a NISSAN dealer or qualified workshop.**
- **The HUD has a special windshield to allow the image to be displayed clearly. If your windshield needs replacing, this should be completed by a NISSAN dealer.**

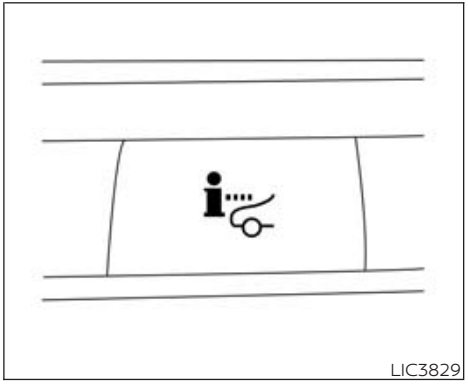
LIC3829

HOW TO USE THE HUD

To turn the HUD on, push the HUD switch. To turn the HUD off, push the switch again.

If the HUD is turned off, it will remain off even if the vehicle is restarted.

The following settings can be changed in the vehicle information display:

- Brightness
- Height
- Rotation
- Contents selection
  - Navigation
  - Driving Assist

- Speed Limit Sign
- Audio
- TEL/SMS

- Reset

NOTE:

- **Emergency information may display even if the HUD is turned off.**
- **If the HUD is turned off, the settings items are grayed out and cannot be modified until the HUD is turned back on.**
- **When Driving Assist is activated, the HUD will be displayed with the ProPILOT Assist switch on even if the HUD switch is turned off.**

This product includes the following software.

(1) Panasonic Corporation or software developed for Panasonic Corporation

(2) Third-party software licensed to Panasonic Corporation

(3) Open source software

Regarding (3) Open source software, it includes open source software (OSS), including various software to which license information applies.

Refer to the license web site at:
http://car.panasonic.jp/oss/j03llnna.

DRIVER ASSISTANCE/NAVIGATION LINKING

Basic Information

The HUD will display driver assistance and navigation information.

The driver assistance display will show warning situations for the following systems:

- Automatic Emergency Braking (AEB) with Pedestrian Detection
- Lane Departure Warning (LDW)
- Intelligent Forward Collision Warning (IFCW)
- Hands-free warning (for vehicles with ProPILOT Assist) (if so equipped)
- Lane Change Assist indicator (for vehicles with ProPILOT Assist 2.1) (if so equipped)
- Traffic Sign Recognition (TSR)

The navigation system linking display will show the following items:

- Intersection names
- Arrows indicating turning direction
- Distance to the next intersection

The Audio System linking display will show the following items:

- Songs
- Radio stations

The TEL/SMS linking display will show the following items:

- Caller's name or phone number

The message linking display will show the following item:

- ProPILOT Assist 2.1

Warning Message (if so equipped)

When the following system is operated, the warning message appears on the HUD:

- ProPILOT Assist 2.1

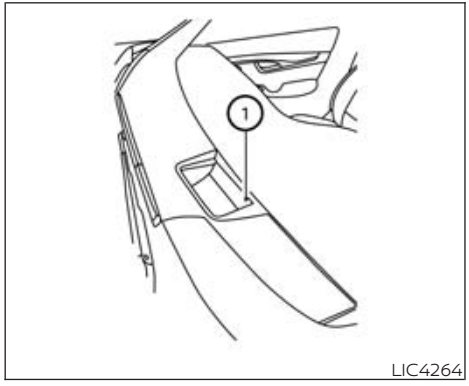

LIC4264

Display brightness

The brightness of the display may be controlled by the navigation system. The brightness will also be adjusted automatically according to the exterior ambient lighting brightness.

NOTE:

- **The HUD has a built-in sensor ① that controls the brightness of the displayed image. If you block the sensor with an object, the display will darken, making it difficult to see.**
- **Do not apply strong light to the sensor of the Head-Up Display. Doing so may cause a malfunction.**

EMERGENCY SUPPORT

Basic Information

NissanConnect® Services provide various services to support dealing with emergencies of the subscribed vehicle and the driver.

For example, in case of an illness or serious injury, you can seek support by pressing the in-vehicle Emergency Call (SOS) button and connecting to the NissanConnect® Services Response Center. The NissanConnect® Services Response Center can specify the location of the vehicle via GNSS, and the information will be sent to the police or other agencies as needed.

For information about other NissanConnect® Services emergency support related services, contact the NissanConnect® Customer Support line at 1-855-426-6628 or refer to the NissanConnect® Services website www.nissanusa.com/connect (for U.S.) or www.nissan.ca/nissanconnect (English) / www.nissan.ca/nissanconnect/fr (French) (for Canada).

For models with ProPILOT Assist 2.1:

After the vehicle is brought to an emergency stop, the vehicle is connected to the Emergency Call (SOS) service operator, who then requests relief from public institutions (police, fire department, medical institutions). For additional information, see "ProPILOT Assist 2.1" (P. 360).

⚠ WARNING

- **Please note that the Automatic Collision Notification service and Emergency Call function cannot be used in the following conditions:**
  - **Emergency functions and services will not be available without a paid subscription to NissanConnect® Services.**
  - **The NissanConnect® Services network system is disabled.**
  - **The vehicle moves outside the service area where the TCU (Telematics Control Unit) is connected to the system.**
  - **The vehicle is outside the area where the cellular network service is receivable.**
  - **The vehicle is in a location with poor signal reception such as tunnels, underground parking garages, behind buildings or in mountainous areas.**
  - **The line is busy.**
  - **The TCU (Telematics Control Unit) or other systems of your vehicle are not working properly.**
  - **It may not be possible to make an emergency call depending on the severity of a collision and/or emergency.**
- **Automatic Collision Notification triggers a connection from the car to the NissanConnect® Services Emergency Response Center when the vehicle has been involved in a collision and/or if the airbags have deployed.**
- **Park the vehicle in a safe location and set the parking brake before operating the Emergency Call (SOS) button.**
- **Only use this service in case of an emergency. There may be a penalty for inappropriate use of the service.**
- **Radio waves could adversely affect electric medical equipment. Individuals who use a pacemaker should contact the device manufacturer regarding any possible effects before using the system.**
- **The TCU (Telematics Control Unit) antenna is installed inside the upper central part of the instrument panel. An occupant should not get any closer to the antenna than specified by the pacemaker manufacturer. The radio waves from the TCU antenna may adversely affect the operation of the pacemaker while using the NissanConnect® Services.**
- **If the automatic emergency call has been triggered, it is recommended that you bring your vehicle to a NISSAN dealer. This is necessary because the automatic call system needs to be reset to avoid any unintended emergency call being made.**

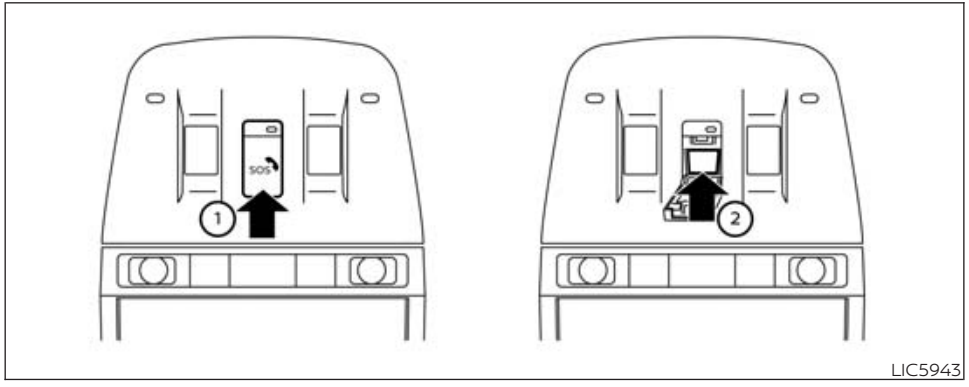

Making an emergency call

The Emergency Call (SOS) button ② is under a cover and is located near the map light.

1. Place the ignition switch in the ON position.
2. Press the cover ① to expose the Emergency Call (SOS) button ②
3. Press the Emergency Call (SOS) button ② to make an emergency call.
4. When the line is connected, speak to the Response Specialist.

If you want to cancel the emergency call, press and hold the Emergency Call (SOS) button for a few seconds.

NOTE:

- **After the Emergency Call (SOS) button is pressed, it may take some time until the system initiates connection, depending on the technical environment and whether the TCU (Telematics Control Unit) is being used by the other services.**
- **An indicator light on the Emergency call (SOS) button shows the readiness of the emergency support system. If the indicator light is not illuminated, pressing the Emergency Call (SOS) button does not connect your vehicle to the Response Specialist. The indicator light blinks while connected to the NissanConnect® Services Response Center.**
- **Even when the indicator light is illuminated, connection to the NissanConnect® Services Response Center may not be possible. If this occurs in an emergency situation, contact the authorities by other means.**
- **To avoid disconnecting the line, keep the engine running during an emergency call, if it is safe to do so.**

REAR DOOR ALERT

The Rear Door Alert system functions under certain conditions to indicate there may be an object or passenger in the rear seat(s). Check the seat(s) before exiting the vehicle.

The Rear Door Alert system is initially disabled. The driver can enable the system using the vehicle information display. For additional information, see "Vehicle information display warnings and indicators" (P. 116).

When the system is enabled:

- The system is activated when a rear door is opened and closed within 10 minutes of the vehicle being driven. When the driver door is closed and the system is activated, a visual message appears in the vehicle information display. For additional information, see "Rear Door Alert is activated" (P. 117).
- If a rear door is opened and closed but the vehicle is not driven within approximately 10 minutes, the system will not be activated. A rear door must be opened and closed and the car driven within 10 minutes for the system to activate.

When the Rear Door Alert system is activated:

- When the driver puts the vehicle in the P (Park) position, a notification message appears in the vehicle information display with the options to "Dismiss Message" or "Disable Alert" if desired.
  - Select "Disable Alert" to temporarily disable for that stop.
  - No selection or 'Dismiss Message" will keep the alert enabled for that stop.
- If the alert is enabled when a driver exits the vehicle, a message will appear in the vehicle information display that states "Check Rear Seat."

  If "Horn & Alert" setting is selected:
  - An audible horn sound will occur after a short time unless a rear door is opened and closed within a short time to deactivate the alert.
  - If the doors are locked before the alert is deactivated by opening a rear door, the horn will sound.
  - If the liftgate is opened before a rear door is opened, the horn will be delayed until after the liftgate is closed.

NOTE:

If "Alert Only" setting is selected, the message alert will still be shown in the vehicle information display but the horn will not sound.

⚠ WARNING

- **If the driver selects "Disable Alert", no audible alert will be provided regardless of rear door open/close status.**
- **There may be times when there is an object or passenger in the rear seat(s) but the audible alert does not sound. For example, this may occur if rear seat passengers enter or exit the vehicle during a trip.**
- **The system does not directly detect objects or passengers in the rear seat(s). Instead, it can detect when a rear door is opened and closed, indicating that there may be something in the rear seat(s).**

NOTE:

There may be times when the horn sounds but there are no objects or passengers in the rear seat(s).

For additional information, see "Rear Door Alert is activated" (P. 117).

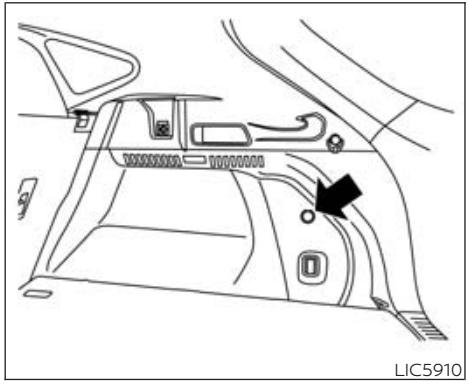

Cargo Area

12V OUTLET

The power outlet is for powering electrical accessories such as cellular telephones. It is rated at 12 volt, 120W (10A) maximum.

The vehicle's power outlet is powered only when the ignition switch is in the ACC or ON position.

Open the cap to use a power outlet.

⚠CAUTION

- **The outlet and plug may be hot during or immediately after use.**
- **Only certain power outlets are designed for use with a cigarette lighter unit. Do not use any other power outlet for an accessory lighter. It is recommended that you visit a NISSAN dealer for additional information.**
- **Do not use with accessories that exceed a 12 volt, 120W (10A) power draw.**
- **Do not use double adapters or more than one electrical accessory.**
- **Use power outlets with the engine running to avoid discharging the vehicle battery.**
- **Avoid using power outlets when the air conditioner, headlights or rear window defroster is on.**
- **Before inserting or disconnecting a plug, be sure the electrical accessory being used is turned off.**
- **Push the plug in as far as it will go. If good contact is not made, the plug may overheat or the internal temperature fuse may open.**
- **When not in use, be sure to close the cap. Do not allow water or any other liquid to contact the outlet.**

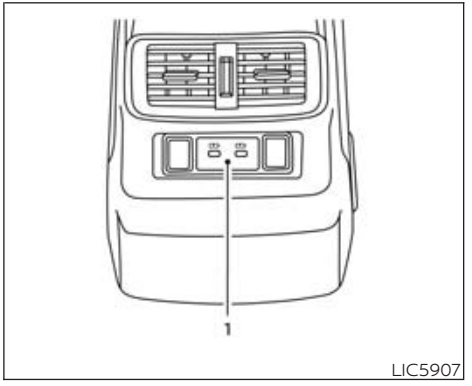

Rear seat area

1. Type-C USB

There are USB/iPod® charging ports located in the rear seat area on the back of the center console. These ports will charge compatible devices.

NOTE:

- **Only the USB connection port(s) located below the instrument panel will allow operation of USB/iPod® devices through the audio system.**

- **For best results, it is recommended to use the manufacturer cables, which are sold separately. A USB Type-C adapter can also be purchased separately; however, results may vary.**

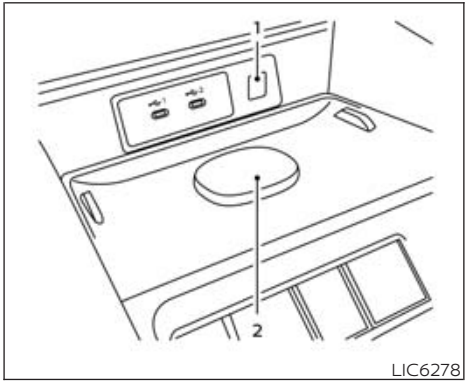

BASIC INFORMATION

1. Indicator
2. Charging pad

The magnetic wireless charger is located on the front of the center console, below the climate control system. Place the smartphone on the center of the charging pad (2). Charging will start automatically. The smartphone will be charged continuously while the ignition switch is in the ON position.

WARNING

- **Never put metallic materials between the wireless charger and a smartphone.**
- **Those who use a pacemaker or other medical equipment should contact the electric medical equipment manufacturer for the possible influences before use.**
- **Never put cloth over the smartphone during charging process.**
- **Never charge a smartphone when it is wet.**
- **Never put metallic materials or small goods such as a cigarette lighter, Intelligent Key or memory drive.**

CAUTION

- **Do not put an RFID/NFC/credit card between the wireless charger and a smartphone. This could cause data corruption in the card.**
- **Do not use the wireless charger with dust accumulated or dirt on the pad.**
- **Do not hit the surface of the wireless charger.**

- **Do not spill liquid (water, drinks, etc.) on the charging pad.**
- **Do not use grease, oil or alcohol for cleaning charging pad.**

Wireless charger indicator

The indicator (1) will illuminate in orange when the charging process is started.

When the charging has completed, the indicator illuminates in green.

If a malfunction occurs or the charging process has stopped, the indicator will blink in orange for 8 seconds then turn off.

Wireless charger operation

To use the magnetic wireless charger, place your phone on the charging pad (2) with the center of your phone aligned to the center of the charging pad. To optimize the charging performance, use a Qi2 compatible phone or phone case equipped with a magnetic ring. This will help the phone properly attach and align on the magnetic charger.

Because some smartphone cases including those not equipped with magnetic ring or accessories may adversely affect charging, remove them before wireless charging. Turn off the vibration function of the smartphone before wireless charging.

NOTE:

- **Only a Qi or Qi2 compatible smartphone can be used.**
- **An audible fan noise may be heard during charging operation. This is a normal part of the charging process and not a malfunction.**
- **The smartphone may be warmed during charging process and the charging may stop by the protection function of the wireless charger. This is not a malfunction. If this occurs, restart charging after the smartphone has cooled down. The indicator will blink in orange then turn off.**
- **The wireless charging process may be stopped by the status of the smartphone (battery temperature, etc.).**
- **If a radio noise interference occurs during charging process, put the smartphone onto the center of the wireless charger.**
- **The wireless charging process will stop during process of searching for the Intelligent Key.**
- **The wireless charging process will not be started when a USB (Universal Serial Bus) cable is connected to the smartphone. The indicator may illuminate in orange or blink if the smartphone is put on the wireless charger with a USB cable connected. However, charging is not performed.**
- **Depending on the type of the smartphone, the indicator may remain illuminated in orange even when the charging process has been completed.**

This device complies with part 15 of the FCC Rules and RSS-Gen of IC Rules.
Operation is subject to the following two conditions:
(1) This device may not cause harmful interference, and
(2) This device must accept any interference received, including interference that may cause undesired operation.
Changes or modifications not expressly approved by the party responsible for compliance could void the user's authority to operate the equipment.
RF Radiation Exposure Statement: This equipment complies with FCC RF Radiation exposure limits set forth for an uncontrolled environment.
This device and its antenna must not be co-located or operating in conjunction with any other antenna or transmitter.

This equipment should be installed and operated with a minimum distance of 15cm between the radiator and your body.

ISED Compliance Statement
This device complies with RSS-Gen of IC Rules
Operation is subject to the following two conditions:
(1) This device may not cause harmful interference, and
(2) This device must accept any interference received, including interference that may cause undesired operation.
Changes or modifications made to this device, not expressly approved by the party responsible for compliance will void the user's authority to operate the equipment.
ISED RF Radiation Exposure Statement: This equipment complies with ISED RF Radiation exposure limits set forth for an uncontrolled environment. This device and its antenna must not be co-located or operating in conjunction with any other antenna or transmitter. This equipment should be installed to operate with a minimum distance of 15 cm between the radiator and the end-user's body and arms.

EXTENDED STORAGE SWITCH (if so equipped)

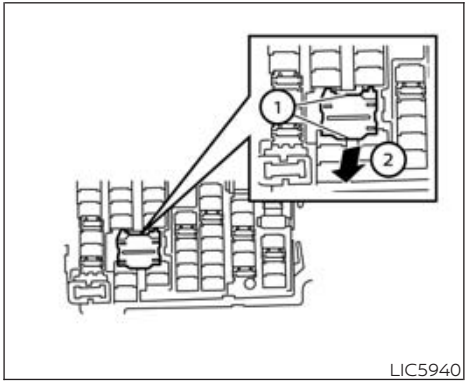

The extended storage switch is used when shipping the vehicle. It is located in the fuse panel below the steering column and above the pedals. If any electrical equipment does not operate, ensure the extended storage switch is pushed fully in place.

To inspect the extended storage switch, ensure the ignition switch and headlights are off.

How to put the vehicle into extended storage mode:

- Pull the extended storage switch fully out.

How to take the vehicle out of extended storage mode:

- Push the extended storage switch fully in place.

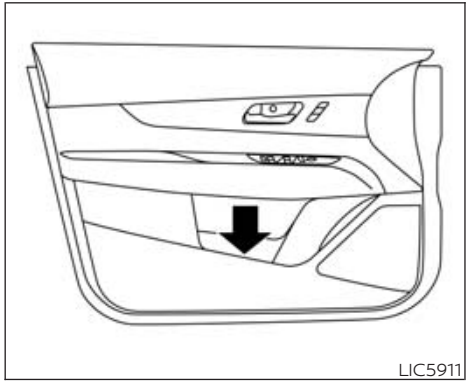

FRONT-DOOR POCKETS

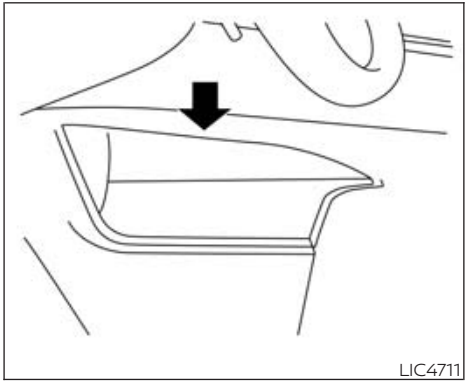

LOWER CONSOLE STORAGE TRAY (if so equipped)

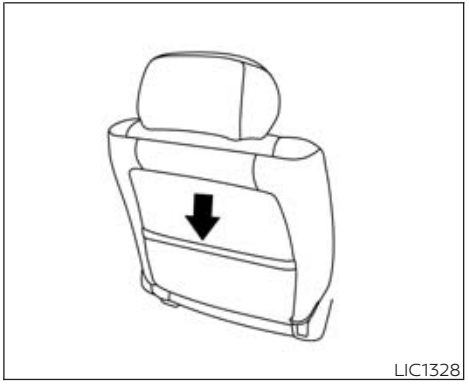

SEATBACK POCKETS

There is one seatback pocket located on the back of the passenger seat. The pocket can be used to store maps.

⚠WARNING

To ensure proper operation of the driver's and/or front passenger's NISSAN Advanced Air Bag System, please observe the following items:

- **Do not allow a passenger in the rear seat to push or pull on the seatback pocket or head restraint/headrest.**

- **Do not place heavy loads heavier than 9.1 lbs. (4 kg) on the seatback, head restraint/headrest or in the seatback pocket.**

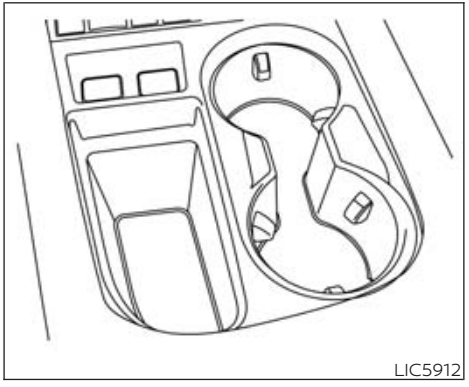

Front console

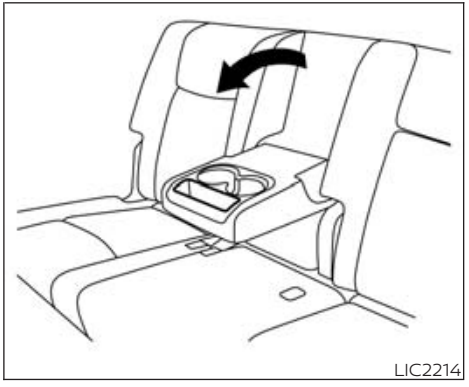

Rear armrest

STORAGE TRAYS

WARNING

Do not place sharp objects in the trays to help prevent injury in an accident or sudden stop.

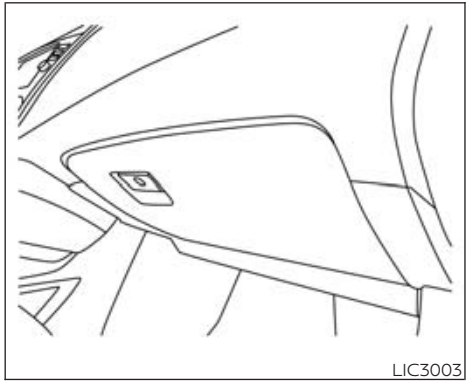

GLOVE BOX

Open the glove box by pulling the handle.

Use the mechanical key to lock or unlock the glove box. The valet key (if so equipped) cannot be used to lock or unlock the glove box.

⚠ WARNING

Keep glove box lid closed while driving to help prevent injury in an accident or a sudden stop.

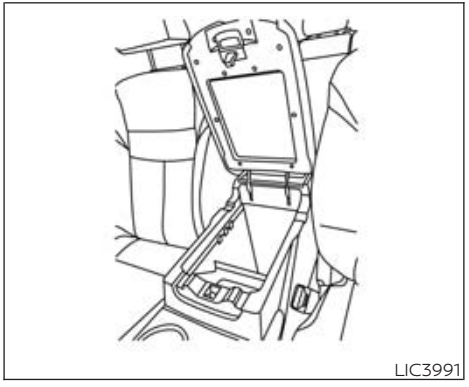

CONSOLE BOX

To open the console box, press in on the lever and raise the lid.

To close, push the lid down until the lock latches.

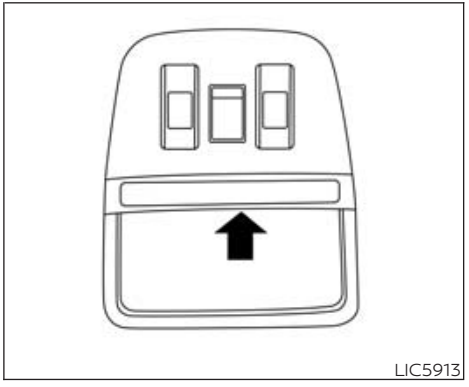

OVERHEAD SUNGLASSES STORAGE

To open the sunglasses holder, push and release.

Only store one pair of sunglasses in the holder.

⚠ WARNING

Keep the sunglasses holder closed while driving to avoid obstructing the driver's view and to help prevent an accident.

⚠ CAUTION

- **Do not use for anything other than sunglasses.**
- **Do not leave sunglasses in the sunglasses holder while parking in direct sunlight. The heat may damage the sunglasses.**

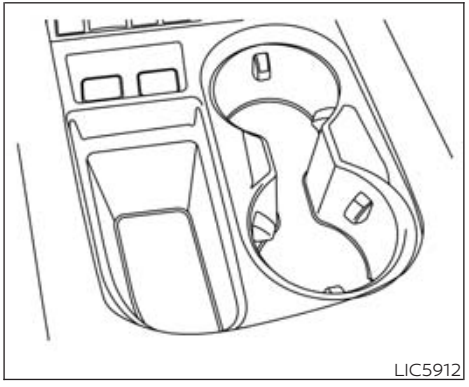

Front console

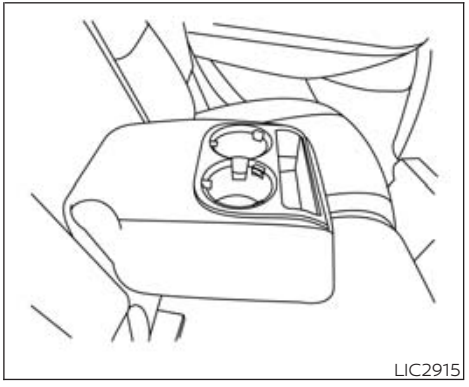

Bench seat

CUP HOLDERS

⚠ CAUTION

- **Avoid abrupt starting and braking when the cup holder is being used to prevent spilling the drink. If the liquid is hot, it can scald you or your passenger.**
- **Use only soft cups in the cup holder. Hard objects can injure you in an accident.**

- **Do not recline the rear seatback when you use the cup holders on the rear armrest. Doing so may cause the beverages to spill over, and if they are hot, they may scald the passengers.**

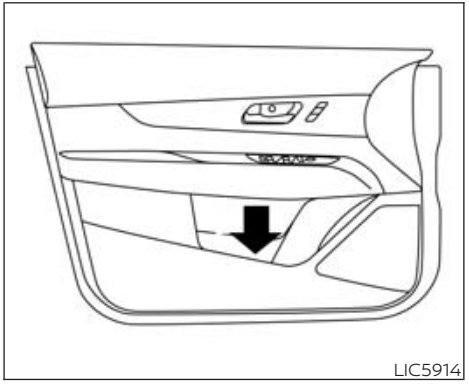

Bottle holder — front

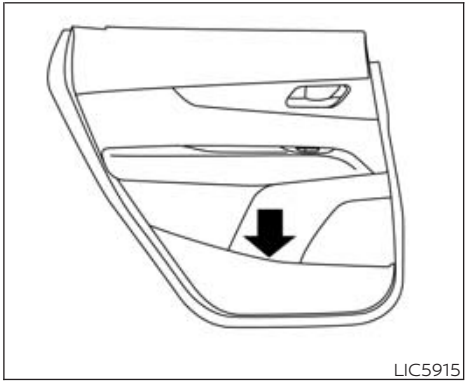

Bottle holder — rear

⚠ CAUTION

- **Do not use the bottle holder for any other objects that could be thrown about in the vehicle and possibly injure people during sudden braking or an accident.**
- **Do not use the bottle holder for open liquid containers.**

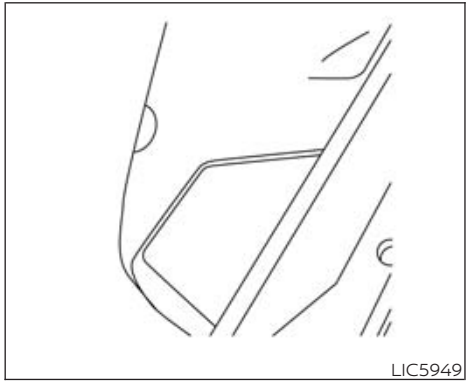

CARGO AREA STORAGE BIN

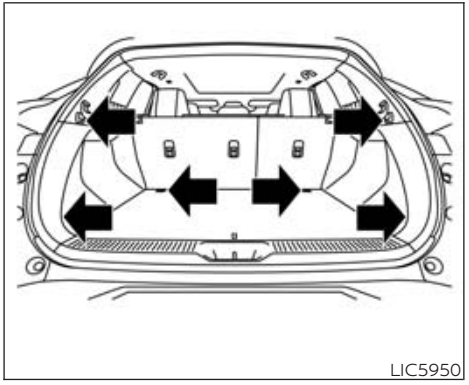

LUGGAGE HOOKS

When securing items using luggage hooks located on the side finisher do not apply a load over more than 6.5 lbs. (29 N) to a single hook.

The luggage hooks that are located on the floor should have loads less than 110 lbs. (490 N) to a single hook.

The luggage hooks can be used to secure cargo with ropes or other types of straps.

⚠ WARNING

- **Properly secure all cargo with ropes or straps to help prevent it from sliding or shifting. Do not place cargo higher than the seatbacks. In a sudden stop or collision, unsecured cargo could cause personal injury.**
- **Use suitable ropes and hooks to secure cargo.**
- **Never allow anyone to ride in the luggage area. It is extremely dangerous to ride in a cargo area inside of a vehicle. In a collision, people riding in these areas are more likely to be seriously injured or killed.**
- **Do not allow people to ride in any area of your vehicle that is not equipped with seats and seat belts.**
- **The child restraint top tether strap may be damaged by contact with items in the cargo area. Secure any items in the cargo area. Your child could be seriously injured or killed in a collision if the top tether strap is damaged.**
- **Be sure everyone in your vehicle is in a seat and using a seat belt properly.**

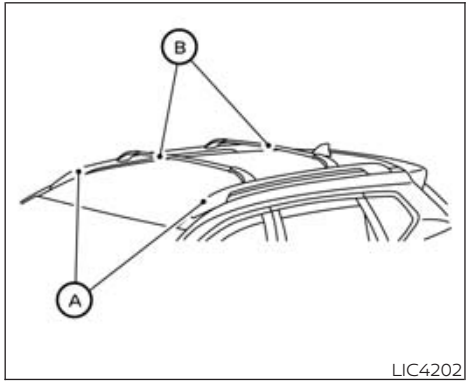

Example

ROOF RACK

Basic Information

⚠ WARNING

- **Always install the crossbars onto the roof side rails before loading cargo of any kind. Loading cargo directly onto the roof side rails or the vehicle's roof may cause vehicle damage.**
- **Roof rack cross bars should be evenly distributed.**
- **Do not exceed maximum roof rack crossbars load capacity and always distribute the load uniformly.**
- **Heavy loading of the crossbars has the potential to affect the vehicle stability and handling during sudden or unusual handling maneuvers.**
- **Properly secure all cargo with ropes or straps to help prevent it from sliding or shifting. In a sudden stop or collision, unsecured cargo could cause personal injury.**
- **Drive extra carefully when the vehicle is loaded at or near the cargo carrying capacity, especially if the significant portion of that load is carried on the crossbars.**

⚠ CAUTION

- **Use care when placing or removing items from the roof rack. If you cannot comfortably lift the items onto the roof rack from the ground, use a ladder or a stool.**

Do not apply any load directly to the roof side rails Ⓐ. Crossbars Ⓑ must be installed before applying load/cargo/luggage to the roof of the vehicle.

Genuine NISSAN accessory crossbars may be available through a NISSAN dealer. It is recommended that you visit a NISSAN dealer for additional information.

The service load capacity for the roof side rails is 220 lbs. (100 kg.), however do not exceed the crossbars load capacity.

Be careful that your vehicle does not exceed the Gross Vehicle Weight Rating (GVWR) or its Gross Axle Weight Rating (GAWR front and rear).

For additional information regarding GVWR and GAWR, refer to:

- F.M.V.S.S. or C.M.V.S.S. certification label (located on the driver's door pillar).

Installing crossbars (if so equipped)

⚠WARNING

- **It is recommended that you have the roof rack crossbars installed by a NISSAN dealer.**
- **Protect the painted area on the vehicle's roof under the crossbars by placing a piece of cloth under the cross bars to prevent scratch damage.**
- **Make sure the moonroof (if so equipped) is in the closed position during the installation process.**

POWER WINDOWS

Basic Information

⚠WARNING

- **Make sure that all passengers have their hands, etc., inside the vehicle while it is in motion and before closing the windows. Use the window lock switch to prevent unexpected use of the power windows.**
- **To help avoid risk of injury or death through unintended operation of the vehicle and/or its systems, including entrapment in windows or inadvertent door lock activation, do not leave children, people who require the assistance of others or pets unattended in your vehicle. Additionally, the temperature inside a closed vehicle on a warm day can quickly become high enough to cause a significant risk of injury or death to people and pets.**

The power windows operate when the ignition switch is placed in the ON position or for a period of time after the ignition switch is placed in the OFF position. If the driver's or passenger's door is opened during this period of time, the power to the windows is canceled.

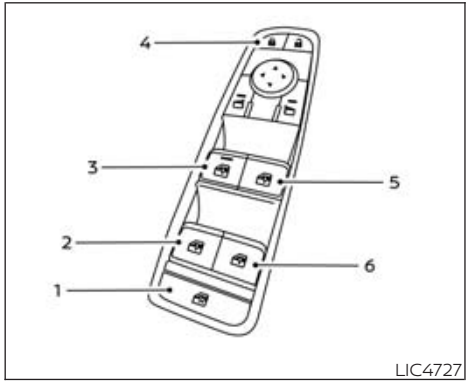

Driver's side power window switch

1. Window lock button
2. Left rear passenger side switch
3. Driver's side switch
4. Power door lock/unlock switch
5. Front passenger side switch
6. Right rear passenger side switch

The driver's side control panel is equipped with switches to open or close all of the windows.

To open a window, push the switch to the detent and continue to hold down until the desired window position is reached. To close a window, pull the switch to the detent and continue to hold up until the desired window position is reached.

Locking passengers' windows

When the window lock button is pressed (the indicator illuminates), the rear passengers' windows cannot be operated with the rear passengers' power window switch. The rear passengers' windows can only be operated with the main switch (driver side switches). To cancel the passenger's window lock, press the window lock button again.

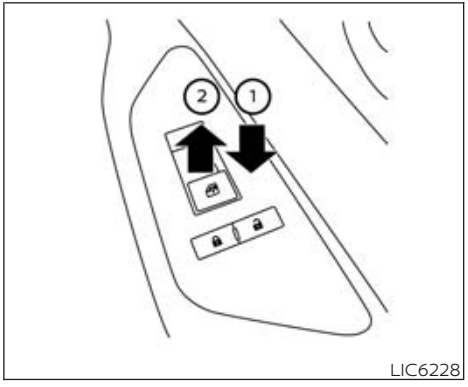

Front passenger's power window switch

The passenger's window switch operates only the corresponding passenger's window. To open the window partially, push the switch down ① lightly until the desired window position is reached. To close the window partially, pull the switch up ② until the desired window position is reached.

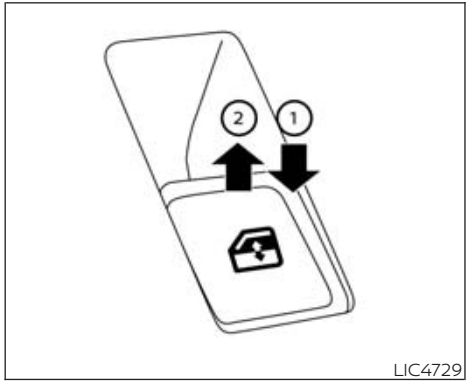

Rear power window switch

The rear power window switches open or close only the corresponding windows. To open the window, push the switch and hold it down ①. To close the window, pull the switch up ②.

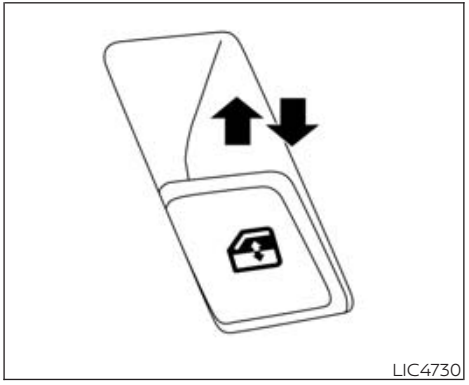

Automatic operation

To fully open a window equipped with automatic operation, push the window switch down to the second detent and release it; it need not be held. The window automatically opens all the way. To stop the window, lift the switch up while the window is opening.

Auto-reverse function (if so equipped)

The auto-reverse function can be activated when a window is closed by automatic operation.

Depending on the environment or driving conditions, the auto-reverse function may be activated if an impact or load similar to something being caught in the window occurs.

⚠WARNING

There are some small distances immediately before the closed position which cannot be detected. Make sure that all passengers have their hands, etc., inside the vehicle before closing the window.

If the vehicle's battery is disconnected, replaced, or jump started, the power window auto-reverse function may not operate properly. Have the power window auto-reverse system re-initialized. It is recommended that you visit a NISSAN dealer for this service.

If the control unit detects something caught in a window equipped with automatic operation as it is closing, the window will be immediately lowered.

When power window switch does not operate

If the power window automatic function (closing only) does not operate properly, perform the following procedure to initialize the power window system:

1. Place the ignition switch in the ON position.
2. Open the window more than halfway by operating the power window switch.
3. Pull the power window switch and hold it to close the window, and then hold the switch more than 3 seconds after the window is closed.
4. Release the power window switch. Operate the window by the automatic function to confirm the initialization is complete. The power window automatically opens or closes depending on if the automatic down or up function is selected.
5. Perform steps 2 through 4 above for other windows.

If the power window function does not operate properly after performing the above procedure have the system checked and repaired. It is recommended that you visit a NISSAN dealer for this service.

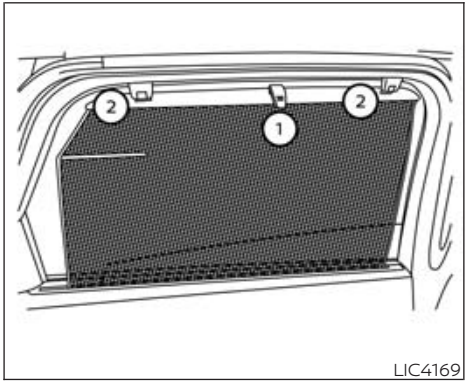

REAR DOOR SUNSHADE (if so equipped)

The rear door sunshade is located within the rear doors at the base of the window.

- To raise the sunshade, pull up the center tab ①.
- Hook the sunshade slots onto the tabs extending from the top of the window frame ②.

⚠CAUTION

- **Do not release the rear door sunshade during operation. This could damage the sunshade or cause injury.**
- **Do not forcefully pull the sunshade. Doing so may elongate the sunshade. This could cause improper operation or could damage the sunshade.**
- **Do not place objects on or near the rear sunshade. This could cause improper operation or could damage the sunshade.**

NOTE:

To avoid damage to the sunshade, please note the following:

- **Do not pull or push the sunshade, other than upwards.**
- **Do not pull or push the sunshade with the sunshade hung on the hooks.**
- **Do not allow liquids or objects on the storing area of the sunshade.**

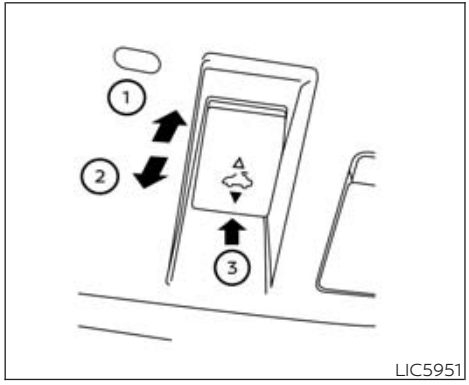

BASIC INFORMATION

The moonroof will only operate when the ignition switch is placed in the ON position. The power moonroof is operational for a period of time, even if the ignition switch is placed in the AUTO ACC or OFF position. If the driver's door or the front passenger's door is opened during this period of time, the power to the moonroof is canceled.

Sliding the moonroof

To fully open or close the moonroof, push the switch to the open ① or close ② position and release it; it need not be held. The roof will automatically open or close all the way. To stop the roof, push the switch once more while it is opening or closing.

Tilting the moonroof

To tilt up, first close the moonroof, then push the switch ③ and release it; it need not be held. To tilt down the moonroof, push the switch to the tilt down position ②.

AUTO-REVERSE FUNCTION (when closing or tilting down the moonroof)

Basic Information

The auto-reverse function can be activated when the moonroof is closed or tilted down by automatic operation when the ignition switch is placed in the ON position or for a period of time after the ignition switch is placed in the OFF position.

Depending on the environment or driving conditions, the auto-reverse function may be activated if an impact or load similar to something being caught in the moonroof occurs.

⚠WARNING

There are some small distances immediately before the closed position which cannot be detected. Make sure that all passengers have their hands, etc., inside the vehicle before closing the moonroof.

If the moonroof switch does not operate

If the moonroof and sunshade do not operate properly, perform the following procedure to initialize the operation system.

1. If the moonroof and sunshade are open, close them fully by repeatedly pushing the moonroof switch to the CLOSE ②.
2. Push and hold the moonroof switch to the CLOSE ② position for 10 seconds.
3. After the moonroof and sunshade move slightly to the closed position and then move back a little, release the moonroof switch.
4. Push and hold the moonroof switch to the CLOSE ② position until the moonroof and sunshade fully open and then fully close.
5. Release the moonroof switch.

6. Check if the moonroof switch operates normally. Place the ignition switch in the OFF position to save initialization.

⚠ WARNING

The driver is always responsible for operating the moonroof properly, including the operation by all passengers. Failure to follow the warnings and instructions for proper use of the moonroof could result in serious injury or death.

- **Do not allow children to operate the moonroof. Improper operation by children may cause an accident. If children or others get caught in the moonroof, it could cause serious injury.**
- **To help avoid risk of injury or death through unintended operation of the moonroof, place the ignition switch in the OFF position when leaving the vehicle, and do not leave children and the Intelligent Key inside the vehicle.**
- **Do not activate the auto-reverse function intentionally. If hands or face, etc. get caught in the moonroof, it could cause serious injury.**

⚠ CAUTION

- **Do not place objects (such as newspapers, handkerchiefs, etc.) on the sunshade when it is extending or retracting causing improper operation or damage to the sunshade.**
- **Do not push the sunshade arm with your hands, etc., as this may deform it. Improper operation or damage to the sunshade may result.**
- **Do not put any object into the sunshade inlet port as this may result in improper operation or damage the sunshade.**
- **Do not hang any object on the arm rail as this may result in improper operation or damage the sunshade.**
- **Do not forcefully pull the sunshade. Doing so may elongate the sunshade. Improper operation or damage to the sunshade may result.**

If the moonroof does not operate properly after performing the procedure above, have your vehicle checked by a NISSAN dealer.

When closing

If the control unit detects something caught in the moonroof as it moves to the front, the moonroof will immediately open backward.

When tilting down

If the control unit detects something caught in the moonroof as it tilts down, the moonroof will immediately tilt up.

If the auto-reverse function malfunctions and repeats opening or tilting up the moonroof, keep pushing the tilt down switch within 5 seconds after it happens; the moonroof will fully close gradually. Make sure nothing is caught in the moonroof.

⚠ WARNING

- **In an accident you could be thrown from the vehicle through an open moonroof. Always use seat belts and child restraints.**
- **Do not allow anyone to stand up or extend any portion of their body out of the moonroof opening while the vehicle is in motion or while the moonroof is closing.**

⚠ CAUTION

- **Remove water drops, snow, ice or sand from the moonroof before opening.**
- **Do not place heavy objects on the moonroof or surrounding area.**

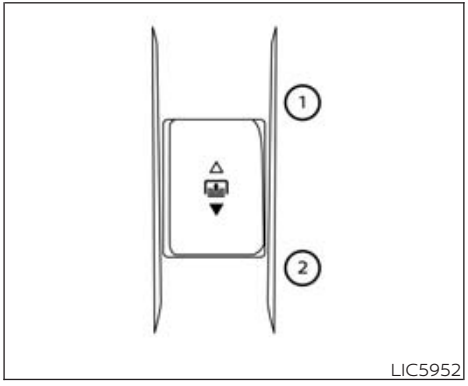

PANORAMIC SUNSHADE

The panoramic sunshade operates when the ignition switch is in the ON position. The sunshade switch is located near the roof console. When opening or closing the sunshade the switch need not be held.

To open the sunshade:

- To fully open the sunshade, push the switch toward the open position ①.

To close the sunshade:

- To fully close the sunshade, push the switch toward the close position ②.

⚠ WARNING

- **To avoid personal injury, keep your hands, fingers and head away from the sunshade arm, the arm rail and sunshade inlet port.**
- **Do not allow children near the rear sunshade system. They could be injured.**
- **Do not place objects on or near the rear sunshade. This could cause improper operation or damage it.**
- **Do not pull or push the rear sunshade. This could cause improper operation or damage it.**

⚠ CAUTION

- **Do not place objects (such as newspapers, handkerchiefs, etc.) on the sunshade inlet port. Doing so may entangle these objects in the sunshade when it is extending or retracting, causing improper operation or damage to the sunshade.**
- **Do not push the sunshade arm with your hands, etc., as this may deform it. Improper operation or damage to the sunshade may result.**

- **Do not hang any object on the arm rail as this may result in improper operation or damage the sunshade.**
- **Do not forcefully pull the sunshade. Doing so may elongate the sunshade. Improper operation or damage to the sunshade may result.**

If the moonroof does not close

Have your moonroof checked and repaired. It is recommended that you visit a NISSAN dealer for this service.

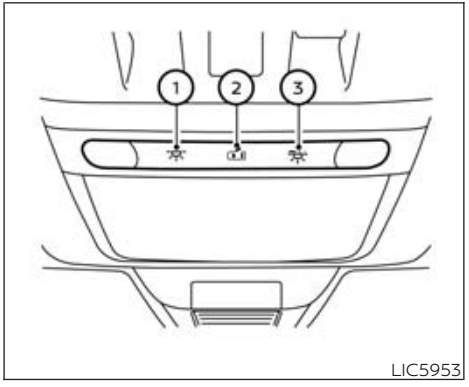

BASIC INFORMATION

① The interior lights can be turned on regardless of door position. The lights will go off after a period of time unless the ignition switch is placed in the ON position when any door is opened.

② The interior lights can be set to operate when the doors are opened. To turn off the interior lights when a door is open, touch the switch, the interior lights will not illuminate, regardless of door position. The lights will go off when the ignition switch is placed in the ON position, or the driver's door is closed and locked.

③ The brightness of the map lights can be adjusted in 4 levels by touching this switch.

⚠ CAUTION

Do not use for extended periods of time with the engine stopped. This could result in a discharged battery.

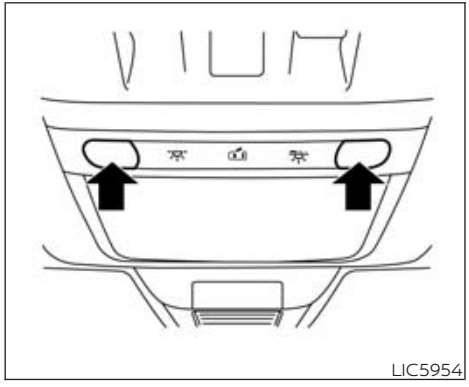

MAP LIGHTS

Touch the light to turn the map lights on. To turn the light off, touch the light again

NOTE:

The lights will also turn off after a period of time when the lights remain illuminated to prevent the battery from becoming discharged.

⚠ CAUTION

Do not use for extended periods of time with the engine stopped. This could result in a discharged battery.

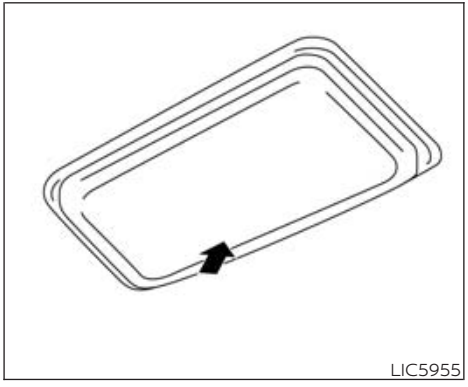

Rear personal lights

PERSONAL LIGHTS

To turn the rear personal light on, touch the light. Touch the light again to dim the light. To turn off the light, touch the light once again.

LUGGAGE COMPARTMENT LIGHT

The light illuminates when the liftgate is opened. When the liftgate is closed, the light will turn off. The lights will turn off automatically after a period of time while doors are open to prevent the battery from becoming discharged.

⚠ CAUTION

Do not use for extended periods of time with the engine stopped. This could result in a discharged battery.

HOMELINK® UNIVERSAL TRANSCEIVER (if so equipped)

BASIC INFORMATION

The HomeLink® Universal Transceiver provides a convenient way to consolidate the functions of up to three individual hand-held transmitters into one built-in device.

HomeLink® Universal Transceiver:

- Will operate most Radio Frequency (RF) devices such as garage doors, gates, home and office lighting, entry door locks and security systems.
- Is powered by your vehicle's battery. No separate batteries are required. If the vehicle's battery is discharged or is disconnected, HomeLink® will retain all programming.

When the HomeLink® Universal Transceiver is programmed, retain the original transmitter for future programming procedures (Example: new vehicle purchases). Upon sale of the vehicle, the programmed HomeLink® Universal Transceiver buttons should be erased for security purposes. For additional information, see "Programming HomeLink®" (P. 176).

⚠WARNING

- **Do not use the HomeLink® Universal Transceiver with any garage door opener that lacks safety stop and reverse features as required by federal safety standards. (These standards became effective for opener models manufactured after April 1, 1982.) A garage door opener which cannot detect an object in the path of a closing garage door and then automatically stop and reverse does not meet current federal safety standards. Using a garage door opener without these features increases the risk of serious injury or death.**
- **During the programming procedure your garage door or security gate will open and close (if the transmitter is within range). Make sure that people or objects are clear of the garage door, gate, etc., that you are programming.**
- **Your vehicle's engine should be turned off while programming the HomeLink® Universal Transceiver. Do not breathe exhaust gases; they contain colorless and odorless carbon monoxide. Carbon monoxide is dangerous. It can cause unconsciousness or death.**

PROGRAMMING HOMELINK®

The following steps show generic instructions on how to program a HomeLink® button. If you have any questions or are having difficulty programming your HomeLink® buttons, refer to the HomeLink® web site at: www.homelink.com/nissan or call 1-800-355-3515.

NOTE:

It is also recommended that a new battery be placed in the hand-held transmitter of the device being programmed to HomeLink® for quicker programming and accurate transmission of the radio-frequency.

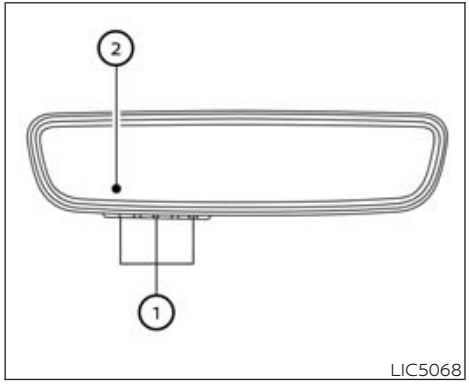

① HomeLink® buttons (1–3)

② Indicator light (appears above each HomeLink® button)

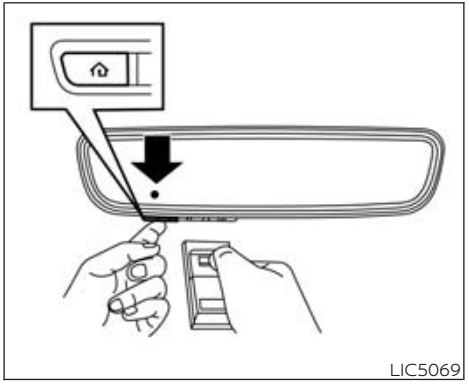

1. Position the end of your hand-held transmitter 1-3 inches (2-8 cm) away from the HomeLink® button that you would wish to program while keeping the indicator light in view.
2. Simultaneously press and hold both the chosen HomeLink® and hand-held transmitter buttons until the HomeLink® indicator light changes from a slow to a rapidly blinking light. Now you may release both the HomeLink® and hand-held transmitter buttons.

NOTE:
Some hand-held transmitters (garage door opener remote) may actually train better at a distance of 6–12 inches (15–20 cm). Keep this in mind if you have difficulty with the programming process.

3. Firmly **press, hold for five seconds and release** the programmed HomeLink® button up to two separate times to activate the door. If the door does not activate, press and hold the just trained HomeLink® button and observe the indicator light.
   - If the indicator light **stays on constantly, programming is complete** and your device should activate when the Homelink® button is pressed and released.
   - If the indicator light blinks **rapidly for two seconds and then turns to a constant light, continue with "Programming" steps 4–6** to complete the programming of a rolling code equipped device (most commonly a garage door opener).

NOTE:
Some devices may require you to replace this Programming Step 2 with procedures noted in the "Programming HomeLink® for Canadian customers and gate openers" (P. 178) section. If the HomeLink® indicator light does not change to a rapidly blinking light after performing these steps, contact HomeLink® at www.homelink.com.

4. At the garage door opener motor (security gate motor, etc.), locate the "Learn" or "Set" button. This can usually be found where the hanging antenna wire is attached to the motor-head unit (see the device's manual to identify this button.). The name and color of the button may vary by manufacturer.

   NOTE:
   A ladder and/or second person may simplify the garage door programming steps. Do not stand on your vehicle to perform the garage door programming steps.

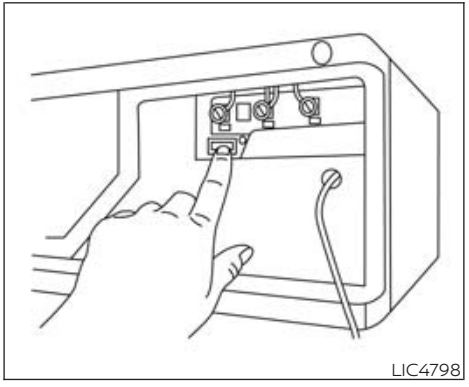

Example

5. Firmly press and release the "Learn" or "Set" button until the indicator illuminates. Once the button is pressed, you have approximately 30 seconds to initiate the next step.

6. Return to the vehicle and firmly press, hold for two seconds and release the HomeLink® button up to three times. **Do not press the HomeLink® button rapidly.** At this point programming is complete and your device should operate when the HomeLink® button is pressed and released.

7. If you have any questions or are having difficulty programming your HomeLink® buttons, refer to the HomeLink® web site at: www.homelink.com/nissan or call 1-800-355-3515.

PROGRAMMING HOMELINK® FOR CANADIAN CUSTOMERS AND GATE OPENERS

Canadian radio-frequency laws require transmitter signals to "time-out" (or quit) after several seconds of transmission – which may not be long enough for HomeLink® to pick up the signal during training. Similar to this Canadian law, some U.S. gate operators are designed to "time-out" in the same manner.

If you live in Canada or you are having difficulties training a gate operator **or** garage door opener by using the "Programming HomeLink®" procedures, **replace** "Programming HomeLink®" **step 2** with the following:

NOTE:

When programming a garage door opener, etc., unplug the device during the "cycling" process to prevent possible damage to the device components.

Step 2: Continue to press and hold the HomeLink® button while you press and release – every two seconds ("cycle") your hand-held transmitter until the HomeLink® indicator light changes from a slow to a rapidly blinking light. Now you may release both the Homelink® and hand-held transmitter buttons.

Proceed with "Programming HomeLink®" step 3 to complete.

Remember to plug the device back in when programming is completed.

OPERATING THE HOMELINK® UNIVERSAL TRANSCEIVER

The HomeLink® Universal Transceiver, after it is programmed, can be used to activate the programmed device. To operate, firmly press the appropriate programmed HomeLink® button. The indicator light will illuminate in green with three parenthesis on the mirror while the signal is being transmitted.

PROGRAMMING TROUBLE-SHOOTING

If the HomeLink® does not quickly learn the hand-held transmitter information:

- Replace the hand-held transmitter batteries with new batteries.
- Position the hand-held transmitter with its battery area facing away from the HomeLink® button.
- Press and hold both the HomeLink® button and hand-held transmitter button in each step without interruption.
- Position the hand-held transmitter 1 to 3 in (2 to 8 cm) away from the HomeLink® button. Hold the transmitter in that position for up to 15 seconds. If HomeLink® is not programmed within that time, try holding the transmitter in another position – for example, 6 to 12 in (15 to 20 cm) away, keeping the HomeLink® button in view at all times.

It is recommended not to place metal objects near the garage door opener antenna for optimal functionality.

If you have any questions or are having difficulty programming your HomeLink® buttons, refer to the HomeLink® web site at: www.homelink.com/nissan or call 1-800-355-3515.

CLEARING THE PROGRAMMED INFORMATION

Basic Information

The following procedure clears the programmed information from three buttons. Individual buttons cannot be cleared. However, individual buttons can be reprogrammed. For additional information, see "Reprogramming a single HomeLink® button" (P. 180).

To clear all programming

1. Press and hold the two outer HomeLink® buttons until the indicator light begins to flash in green in approximately 10 seconds. Do not hold for longer than 20 seconds.
2. Release both buttons.

HomeLink® is now in the programming mode and can be programmed at any time beginning with "Programming HomeLink®" - Step 1.

REPROGRAMMING A SINGLE HOMELINK® BUTTON

To reprogram a HomeLink® button, complete the following:

1. Press and hold the desired HomeLink® button. **DO NOT** release the button.
2. The indicator light will begin to flash after 20 seconds. Without releasing the HomeLink® button, proceed with "Programming HomeLink®" — step 1.

For questions or comments, contact HomeLink® at: www.homelink.com/nissan or 1–800–355–3515.

The HomeLink® button has now been reprogrammed. The new device can be activated by pressing the HomeLink® button that was just programmed. This procedure will not affect any other programmed HomeLink® buttons.

If a new device is not programmed to the HomeLink® button, it will revert to the previously stored programming.

IF YOUR VEHICLE IS STOLEN

If your vehicle is stolen, you should change the codes of any non-rolling code device that has been programmed into HomeLink®. Consult the Owner's Manual of each device or call the manufacturer or dealer of those devices for additional information.

When your vehicle is recovered, you will need to reprogram the HomeLink® Universal Transceiver with your new transmitter information.

FCC Notice:

For USA:

This device complies with Part 15 of the FCC Rules. Operation is subject to the following two conditions: (1) This device may not cause harmful interference, and (2) this device must accept any interference received, including interference that may cause undesired operation.

NOTE:

Changes or modifications not expressly approved by the party responsible for compliance could void the user's authority to operate the equipment.

For Canada:

This device contains licence-exempt transmitter(s)/receiver(s) that comply with Innovation, Science and Economic Development Canada's licence-exempt RSS(s). Operation is subject to the following two conditions: (1) This device may not cause interference. (2) This device must accept any interference, including interference that may cause undesired operation of the device.

3 Pre-driving checks and adjustments

Keys . . . 183
NISSAN Intelligent Key® . . . 183
Doors . . . 185
Basic information . . . 185
Locking with key . . . 185
Locking with inside lock knob . . . 186
Locking with power door lock switch . . . 186
Automatic door locks . . . 186
Child safety rear door lock . . . 187
NISSAN Intelligent Key® system . . . 187
Basic information . . . 187
Operating range . . . 188
Door locks/unlocks precaution . . . 189
NISSAN Intelligent Key® Operation . . . 190
How to use the remote keyless entry function . . . 193
Approach unlock function . . . 196
Walk away lock function . . . 196
Setting memory function . . . 197
Warning signals . . . 197
Troubleshooting guide . . . 197
Remote Engine Start . . . 198
Basic information . . . 198
Remote Engine Start operating range . . . 198
Remote starting the vehicle . . . 199
Canceling a Remote Engine Start . . . 199
Conditions the Remote Engine Start will not work . . . 199
Hood . . . 200
Liftgate . . . 201
Basic information . . . 201
Operating the power liftgate . . . 201
Motion-Activated Liftgate (if so equipped) . . . 204
Liftgate release . . . 206
Liftgate position setting . . . 207
Fuel-filler door . . . 208
Opening the fuel-filler door . . . 208
How to refuel . . . 209
When refueling from a portable fuel container . . . 210
Steering wheel . . . 211
Basic information . . . 211
Manual operation (if so equipped) . . . 211
Power operation (if so equipped) . . . 212
Sun visors . . . 212
Basic information . . . 212
Vanity mirrors . . . 213
Card holder . . . 213

Mirrors 214
Manual anti-glare rearview mirror (if so equipped) 214
Automatic anti-glare rearview mirror (if so equipped) 214
Outside mirrors 215
Memory seat (if so equipped) 218
Basic information 218
Memory storage function 218
Entry/exit function 219
System operation 220

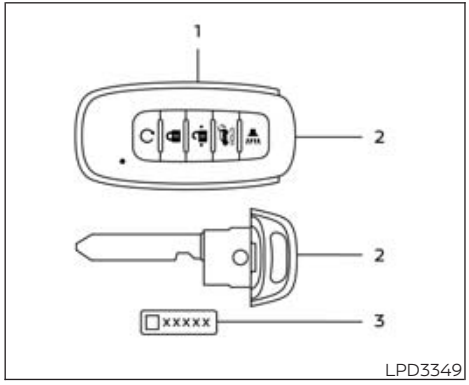

NISSAN INTELLIGENT KEY®

Basic information

1. Intelligent Key (two sets)
2. Mechanical key
3. Key number plate (one plate)

Your vehicle can only be driven with the Intelligent Keys which are registered to your vehicle's Intelligent Key System components and NISSAN Vehicle Immobilizer System components.

Never leave these keys in the vehicle.

As many as four Intelligent Keys can be registered and used with one vehicle. The new keys must be registered prior to use with the Intelligent Key System and NISSAN Vehicle Immobilizer System of your vehicle. It is recommended that you visit a NISSAN dealer for this service. Since the registration process requires erasing all memory in the Intelligent Key components when registering new keys, be sure to take all Intelligent Keys that you have to the NISSAN dealer. Any virtual key accessories (if so equipped) will also have to be reregistered.

A key number plate is supplied with your keys. Record the key number and keep it in a safe place (such as your wallet), not in the vehicle. If you lose your keys, it is recommended that you visit a NISSAN dealer for duplicates by using the key number. NISSAN does not record key numbers so it is very important to keep track of your key number plate.

A key number is only necessary when you have lost all keys and do not have one to duplicate from. If you still have a key, it can be duplicated without knowing the key number.

⚠ CAUTION

Listed below are conditions or occurrences which will damage the Intelligent Key:

- **Do not allow the Intelligent Key, which contains electrical components, to come into contact with water or salt water. This could affect the system function.**
- **Do not drop the Intelligent Key.**
- **Do not strike the Intelligent Key sharply against another object.**
- **Do not change or modify the Intelligent Key.**
- **Wetting may damage the Intelligent Key. If the Intelligent Key gets wet, immediately wipe until it is completely dry.**
- **Do not place the Intelligent Key for an extended period in an area where temperatures exceed 140°F (60°C).**
- **Do not attach the Intelligent Key with a key holder that contains a magnet.**
- **Do not place the Intelligent Key near equipment that produces a magnetic field, such as a TV, audio equipment and personal computers.**

If an Intelligent Key is lost or stolen, NISSAN recommends erasing the ID code of that Intelligent Key from the vehicle. This may prevent the unauthorized use of the Intelligent Key to operate the vehicle. For information regarding the erasing procedure, it is recommended that you visit a NISSAN dealer.

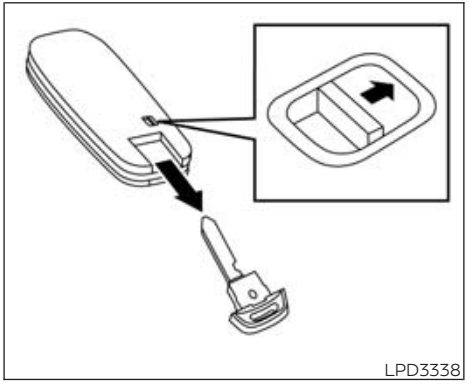

Mechanical key

The Intelligent Key contains the mechanical key.

To remove the mechanical key, release the lock knob on the back of the Intelligent Key.

To install the mechanical key, firmly insert it into the Intelligent Key until the lock knob returns to the lock position.

Use the mechanical key to lock or unlock the driver's door and glove box.

⚠CAUTION

Always carry the mechanical key installed in the Intelligent Key slot.

For additional information, see "Doors" (P. 185) and "Glove box" (P. 162).

Valet hand-off

When you have to leave a key with a valet, give them the Intelligent Key itself and keep the mechanical key with you to protect your belongings.

To prevent the glove box from being opened during valet hand-off, follow the procedure below.

1. Remove the mechanical key from the Intelligent Key.
2. Lock the glove box with the mechanical key.
3. Hand the Intelligent Key to the valet and keep the mechanical key with you.

For additional information, see "Glove box" (P. 162).

BASIC INFORMATION

When the doors are locked using one of the following methods, the doors cannot be opened using the inside or outside door handles. The doors must be unlocked to open the doors.

⚠ WARNING

- **Always have the doors locked while driving. Along with the use of seat belts, this provides greater safety in the event of an accident by helping to prevent persons from being thrown from the vehicle. This also helps keep children and others from unintentionally opening the doors, and will help keep out intruders.**
- **Before opening any door, always look for and avoid oncoming traffic.**
- **To help avoid risk of injury or death through unintended operation of the vehicle and/or its systems, including entrapment in windows or inadvertent door lock activation, do not leave children, people who require the assistance of others or pets unattended in your vehicle. Additionally, the temperature inside a closed vehicle on a warm day can quickly become high enough to cause a significant risk of injury or death to people and pets.**

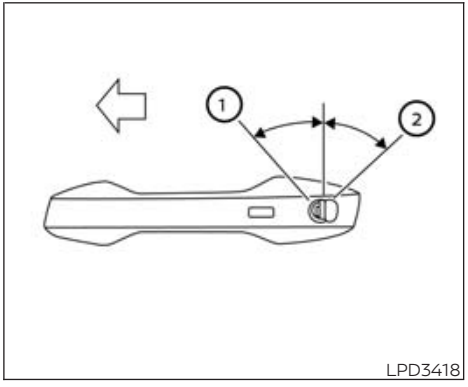

Driver's side

LOCKING WITH KEY

To lock the door using the mechanical key, turn the key toward the rear of the vehicle ②. This will only lock the door and will not activate the security system. To arm the security system, press the button on the Intelligent Key.

To unlock the door using the mechanical key, turn the key toward the front of the vehicle ①. This will only unlock the corresponding door and will not disarm the security system.

For additional information, see "Security systems" (P. 130).

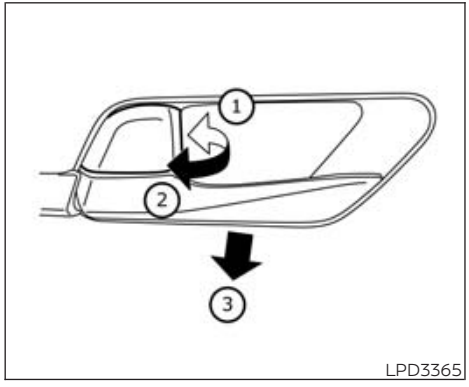

Inside lock

LOCKING WITH INSIDE LOCK KNOB

To lock the door without the key, move the inside lock knob to the lock position ①, then close the door.

To unlock the door without the key, move the inside lock knob to the unlock position ②.

To unlock or open the front doors without using the lock knob, pull once on the door handle ③ to unlock it, and again to open it.

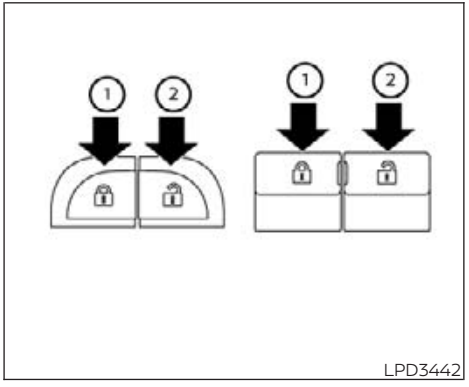

LOCKING WITH POWER DOOR LOCK SWITCH

Basic information

To lock all the doors without a key, push the door lock switch (driver's or front passenger's side) to the lock position ①. When locking the door this way, be certain not to leave the key inside the vehicle.

To unlock all the doors without a key, push the door lock switch (driver's or front passenger's side) to the unlock position ②.

Lockout protection

When the power door lock switch is moved to the lock position and any door is open, all doors will lock. With the Intelligent Key left in the vehicle and any door open, all doors will unlock automatically and chime will sound after the door is closed.

These functions help prevent the Intelligent Key from being accidentally locked inside the vehicle.

AUTOMATIC DOOR LOCKS

- All doors lock automatically when the vehicle speed reaches 15 mph (24 km/h).
- All doors unlock automatically when the transmission is placed in the P (Park) position or when the ignition switch is placed in the OFF position, depending on the option selected in the "Vehicle Settings" menu.

NOTE:

The Auto Door Unlock feature can be changed using the "Vehicle Settings" menu on the vehicle information display. For additional information, see "Vehicle information display" (P. 97).

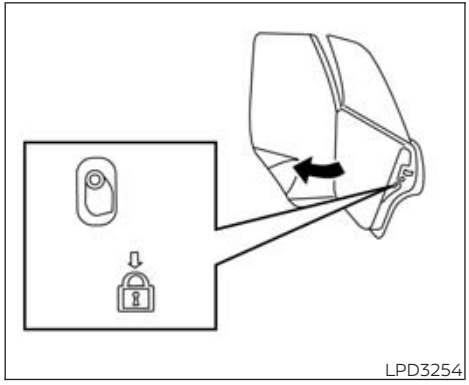

CHILD SAFETY REAR DOOR LOCK

Child safety locks help prevent the rear doors from being opened accidentally, especially when small children are in the vehicle.

The child safety lock levers are located on the edge of the rear doors.

When the lever is in the LOCK position, the door can be opened only from the outside.

BASIC INFORMATION

⚠WARNING

- **Radio waves could adversely affect electric medical equipment. Those who use a pacemaker should contact the electric medical equipment manufacturer for the possible influences before use.**
- **The Intelligent Key transmits radio waves when the buttons are pressed. The FAA advises the radio waves may affect aircraft navigation and communication systems. Do not operate the Intelligent Key while on an airplane. Make sure the buttons are not operated unintentionally when the unit is stored for a flight.**
- **Never leave the Intelligent Key in the vehicle when you leave the vehicle.**
- **Make sure to engage the P (Park) position and apply the parking brake when parking your vehicle, entering or exiting the vehicle or loading luggage. Failure to do so could cause the vehicle to move or roll away unexpectedly and result in serious personal injury or property damage.**

The Intelligent Key system can operate all the door locks using the remote control function or pushing the request switch on the vehicle without taking the key out from a pocket or purse. The operating environment and/or conditions may affect the Intelligent Key system operation.

Be sure to read the following before using the Intelligent Key system.

⚠CAUTION

Be sure to carry the Intelligent Key with you when operating the vehicle.

The Intelligent Key is capable of receiving and transmitting radio waves. The Intelligent Key system transmits weak radio waves from various distances. Environmental conditions may interfere with the operation of the Intelligent Key system under the following operating conditions:

- When operating near a location where strong radio waves are transmitted, such as a TV tower, power station and broadcasting station.
- When in possession of wireless equipment, such as a cellular telephone, transceiver or a CB radio.

- When the Intelligent Key is in contact with or covered by metallic materials.
- When any type of radio wave remote control is used nearby.
- When the Intelligent Key is placed near an electric appliance such as a personal computer.
- When the vehicle is parked near a parking meter.

In such cases, correct the operating conditions before using the Intelligent Key function or use the mechanical key.

Although the life of the battery varies depending on the operating conditions, the battery's life is approximately two years. If the battery is discharged, replace it with a new one.

When the Intelligent Key battery is low, the "Key Battery Low" indicator illuminates in the vehicle information display. For additional information, see "Vehicle information display" (P. 97).

Since the Intelligent Key is capable of receiving radio waves, if the key is left near equipment which transmits strong radio waves, such as signals from a TV and personal computer, the battery life may become shorter.

For additional information, see "Intelligent Key battery replacement" (P. 508).

As many as four Intelligent Keys can be registered and used with one vehicle. For information about the purchase and use of additional Intelligent Keys, it is recommended that you visit a NISSAN dealer.

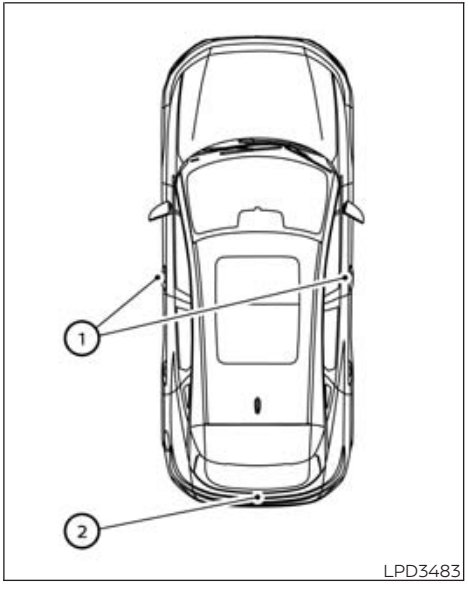

OPERATING RANGE

The Intelligent Key functions can only be used when the Intelligent Key is within the specified operating range from the request switch ① or the liftgate opener switch ②.

When the Intelligent Key battery is discharged or strong radio waves are present near the operating location, the Intelligent Key operating range becomes narrower, and the Intelligent Key may not function properly.

The operating range is within 31.5 in (80 cm) from each request switch ① or the liftgate opener switch ②.

If the Intelligent Key is too close to the door glass, handle or rear bumper, the request switches or liftgate opener switch may not function.

When the Intelligent Key is within the operating range, it is possible for anyone, even someone who does not carry the Intelligent Key, to push the request switch to lock/unlock the doors or open the liftgate.

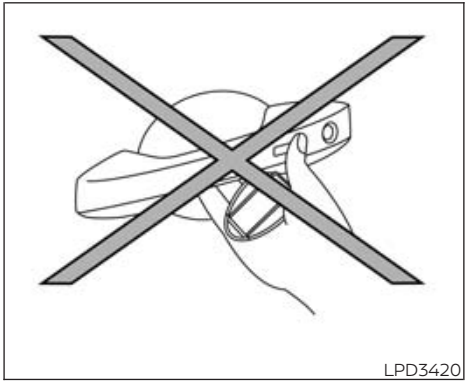

DOOR LOCKS/UNLOCKS PRECAUTION

- Do not push the door handle request switch with the Intelligent Key held in your hand as illustrated. The close distance to the door handle will cause the Intelligent Key system to have difficulty recognizing that the Intelligent Key is outside the vehicle.
- After locking with the door handle request switch, verify the doors are securely locked by testing them.
- To prevent the Intelligent Key from being left inside the vehicle, make sure you carry the Intelligent Key with you and then lock the doors.

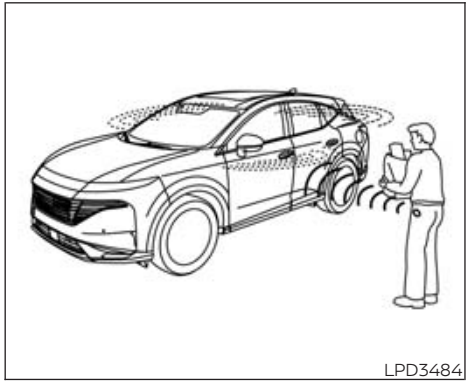
LPD3484

NISSAN INTELLIGENT KEY® OPERATION

Basic information

You can lock or unlock the doors without taking the Intelligent Key out of your pocket or bag.

When you carry the Intelligent Key with you, you can lock or unlock all doors by pushing the door handle request switch within the range of operation.

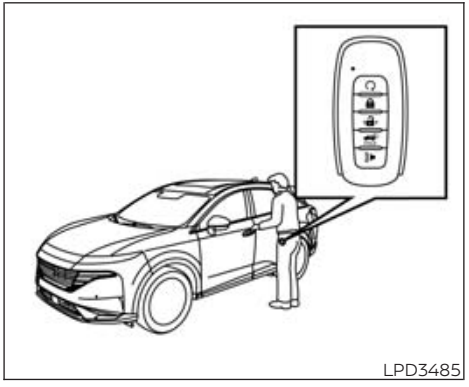
LPD3485

Locking doors

Basic information

1. Press the P (Park) button, place the ignition switch in the LOCK position and make sure you carry the Intelligent Key with you.
2. Close all doors.

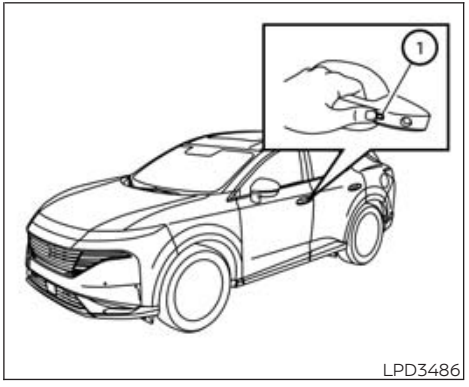

LPD3486

3. Push any door handle request switch ① while carrying the Intelligent Key with you.
4. All doors and the rear liftgate will lock.
5. The hazard indicator lights flash twice and the outside chime sounds twice.

NOTE:

- **Switches for all doors and liftgate can be deactivated when the Ext. Door Switch feature is switched to OFF using the "Vehicle Settings" on the vehicle information display. For additional information, see "Vehicle information display" (P. 97).**
- **Doors lock with the door handle request switch while the ignition switch is not in the LOCK position.**
- **Doors do not lock by pushing the door handle request switch while the driver's door is open. However, doors lock with the mechanical key even if any door is open.**
- **Doors do not lock with the door handle request switch with the Intelligent Key inside the vehicle and a chime sounds to warn you. However, when an Intelligent Key is inside the vehicle, doors can be locked with another Intelligent Key.**

⚠ WARNING

After locking the doors using the request switch, make sure that the doors have been securely locked by operating the door handles. Failure to follow these instructions may result in inadvertently unlocking the doors, which may decrease the safety and security of your vehicle.

⚠ CAUTION

- **When locking the doors using the request switch, make sure to have the Intelligent Key in your possession before operating the request switch to prevent the Intelligent Key from being left in the vehicle.**
- **The request switch is operational only when the Intelligent Key has been detected by the Intelligent Key system.**

Lockout protection

To prevent the Intelligent Key from being accidentally locked in the vehicle, lockout protection is equipped with the Intelligent Key system.

When the driver's side door is open, the doors are locked, then the Intelligent Key is left inside the vehicle and the door is closed, all doors will unlock automatically.

NOTE:

The doors may not lock when the Intelligent Key is in the same hand that is operating the request switch to lock the door. Put the Intelligent Key in a purse, pocket or your other hand.

⚠ CAUTION

The lockout protection may not function under the following conditions:

- **When the Intelligent Key is placed on top of the instrument panel.**
- **When the Intelligent Key is placed inside the glove box or a storage bin.**
- **When the Intelligent Key is placed inside the door pockets.**
- **When the Intelligent Key is placed inside or near metallic materials.**

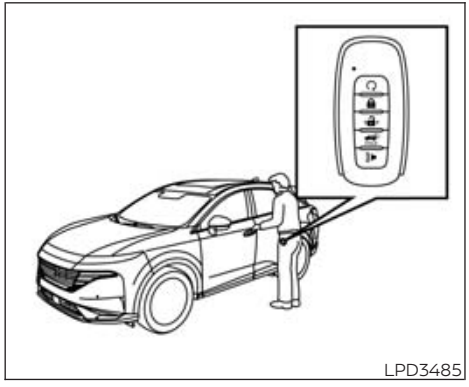
LPD3485

Unlocking doors

1. Carry the Intelligent Key.

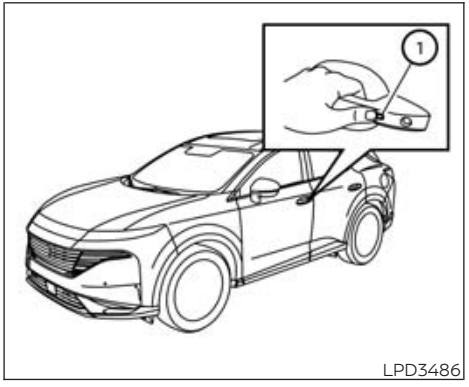

LPD3486

2. Push the door handle request switch ①.
   - When unlocking from the driver's door handle, the driver's door will unlock.
   - To unlock all doors, push the door handle request switch again within 60 seconds.
   - When unlocking from the front passenger door, all doors will unlock
   - To allow the doors to unlock at the same time from the driver's door request switch, turn off the Selective Unlock feature using the "Vehicle Settings" menu on the vehicle information display. For additional information, see "Vehicle information display" (P. 97).
3. The hazard indicator lights flash once and the outside chime sounds once.

NOTE:

Request switches for all doors can be deactivated when the Ext. Door Switch feature is switched to OFF using the "Vehicle Settings" menu in the vehicle information display. For additional information, see "Vehicle information display" (P. 97).

If a door handle is pulled while unlocking the doors, that door may not be unlocked. Returning the door handle to its original position will unlock the door. If the door does not unlock after returning the door handle, push the door handle request switch to unlock the door.

All doors will be locked automatically unless one of the following operations is performed within 60 seconds after pushing the request switch.

- Opening any door.
- Pushing the ignition switch.

Using the interior lights

The interior lights may illuminate for a period of time when a door is opened.

The lights can be turned off without waiting by performing one of the following operations:

- Placing the ignition switch in the ON position.
- Closing and locking the driver's door.
- Touching the interior lights switch.

For additional information, see "Interior lights" (P. 174).

HOW TO USE THE REMOTE KEYLESS ENTRY FUNCTION

Basic information

The remote keyless entry function can operate all door locks using the remote keyless function of the Intelligent Key. The remote keyless function can operate at a distance of 33 ft (10 m) away from the vehicle. The operating distance depends upon the conditions around the vehicle.

The remote keyless entry function will not function under the following conditions:

- When the Intelligent Key is not within the operational range.
- When the Intelligent Key battery is discharged.

⚠ CAUTION

When locking the doors using the Intelligent Key, be sure not to leave the key in the vehicle.

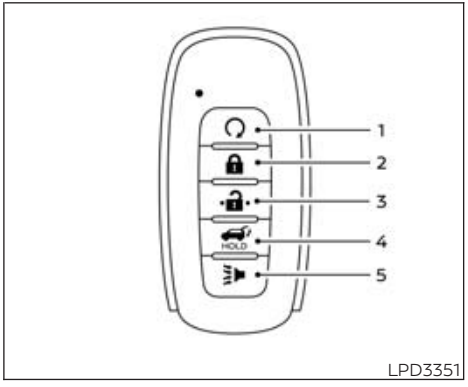

Type A

1. (remote engine start) button
2. (lock) button
3. (unlock) button
4. (liftgate) button
5. (panic) button

Locking doors

1. Place the ignition switch in the LOCK position.
2. Close all doors.
3. Press the button on the Intelligent Key.
4. The hazard indicator lights flash twice and the horn beeps once.
5. All doors will be locked.

WARNING

After locking the doors using the Intelligent Key, be sure that the doors have been securely locked by operating the door handles. Failure to follow these instructions may result in inadvertently unlocking the doors, which may decrease the safety and security of your vehicle.

Unlocking doors

1. Press the button on the Intelligent Key to unlock the driver's door.
2. The hazard indicator lights flash once and the driver's door unlocks.
3. Press the button again within 60 seconds to unlock all doors.

NOTE:

The Selective Unlock feature can be changed using the "Vehicle Settings" menu on the vehicle information display. For additional information, see "Vehicle information display" (P. 97).

All doors will be locked automatically unless one of the following operations is performed within 60 seconds after pressing the button:

- Opening any doors.
- Pushing the ignition switch.

Using the interior lights

The interior lights may illuminate for a period of time when a door is opened.

The lights can be turned off without waiting by performing one of the following operations:

- Placing the ignition switch in the ON position.
- Closing and locking the driver's door.
- Touching the interior lights switch.

For additional information, see "Interior lights" (P. 174).

Opening window(s) (if so equipped)

The Intelligent Key allows you to simultaneously open the window(s) equipped with automatic operation.

All doors must be closed and the key must be outside the vehicle.

To open the window(s) equipped with automatic operation, press and hold the button on the Intelligent Key for **longer than 3 seconds** after all doors are unlocked.

The door window(s) equipped with automatic operation will open while pressing the button on the Intelligent Key.

To interrupt opening of the window(s) equipped with automatic operation, release the button.

- The Intelligent Key cannot close any window.
- All doors will be unlocked by the operation.

Releasing the rear liftgate

The rear liftgate can be opened and closed by performing the following:

- Press the button for longer than 1 second to open the rear liftgate.
- Press the button again for longer than 1 second to close the rear liftgate.

When the button is pressed during the open or close process, the liftgate motors will stop. When the button is pressed again for longer than 1 second the liftgate will reverse direction.

Using the panic alarm

If you are near your vehicle and feel threatened, you may activate the panic alarm to call attention by pressing and holding the button on the Intelligent Key for **longer than 0.5 seconds.**

The panic alarm and headlights will stay on for a period of time.

The panic alarm stops when:

- It has run for a period of time.
- Any button is pressed on the Intelligent Key.
- The request switch on the driver or passenger door is pushed and the Intelligent Key is in range of the door handle.

Trailer light check (if so equipped)

If a hitch receiver accessory is installed on the vehicle, this functionality allows the customer to confirm trailer light operation without the need of a second person to press the brake pedal or activate each turn signal light. The trailer light check can be performed by the Intelligent Key or through the Towing Settings in the vehicle information display. For additional information, see "Towing Settings" (P. 113).

NOTE:

Trailer light check function is available even if no receiver is installed.

To activate the trailer light check function with your Intelligent Key, perform the following:

1. Aim the Intelligent Key at the vehicle.
2. Press and release the (lock) button.
3. Within 2 seconds, press and hold the (lock) button again for at least 2 seconds, until the horn beeps once and the park lights turn on.

The following events will occur:

- The left turn signal light on the vehicle and the trailer will flash for 5 seconds.
- The right turn signal light on the vehicle and the trailer will flash for 5 seconds.
- The stop lights on the vehicle and the trailer will turn ON for 5 seconds.
- Repeat 4 times in total (when the engine is running).

The front parking lights and the tail lights remain on during the events above.

NOTE:

If the trailer lights do not work properly, check the connections and bulbs. If the vehicle lights do not turn on, see "Exterior and interior lights" (P. 511). If the trailer light check routine fails to start, ensure the following vehicle conditions:

- **The vehicle is NOT moving, 0 mph (0 km/h)**
- **Brake pedal is NOT depressed**
- **Left or right turn signal is OFF**
- **Trailer light check configuration is NOT disabled and available in the Towing Settings of the vehicle information display**
- **The hazard switch is NOT turned ON**
- **The shift position is in P (Park) position**
- **Vehicle is within Remote Keyless Entry range**

Horn beeps on lock feature

If desired, the horn beeps on lock feature can be deactivated using the Intelligent Key. When it is deactivated and the button is pressed, the hazard indicator lights flash twice. When the button is pressed, neither the hazard indicator lights nor the horn operates.

NOTE:

The vehicle information display screen can also be used to change the horn beeps on lock feature. For additional information, see "Vehicle information display" (P. 111).

To deactivate:
Press and hold the and buttons **for at least 5 seconds.** The hazard indicator lights will flash three times to confirm that the horn beeps on lock feature has been deactivated.

To activate:
Press and hold the and buttons **for at least 5 seconds once more.** The hazard indicator lights will flash once and the horn will sound once to confirm that the horn beep feature has been reactivated.

Deactivating the horn beep feature does not silence the horn if the alarm is triggered.

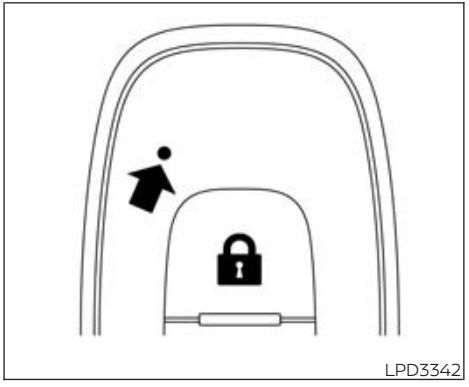

Intelligent Key button operation light

The light blinks only when you press any button on the Intelligent Key. The light illumination only signifies that the key fob has transmitted a signal. You may look and/or listen to verify that the vehicle has performed the intended operation.

If the light does not blink, your battery may be too weak to communicate to the vehicle. If this occurs, the battery may need to be replaced. For additional information regarding the replacement of a battery, see "Intelligent Key battery replacement" (P. 508).

APPROACH UNLOCK FUNCTION

When you approach the vehicle with the Intelligent Key, the vehicle will be unlocked automatically by the approach unlock function. This function is disabled by the default setting. You can enable this function by the vehicle information display. For additional information, see "Vehicle Settings" (P. 111).

WALK AWAY LOCK FUNCTION

When you walk away from the vehicle with the Intelligent Key, the vehicle will be locked automatically by the walk-away lock function. This function is disabled by the default setting. You can enable this function by the vehicle information display. For additional information, see "Vehicle Settings" (P. 111).

NOTE:

- **When the doors are locked by the walk away lock function, the hazard indicator flash twice. Be sure to confirm the door locks before you leave the vehicle.**
- **The walk-away lock function may not operate under the following conditions:**
  - **When the door(s) and/or the liftgate are not closed securely.**
  - **When the engine is running.**

- **When the Intelligent Key is placed inside of the vehicle.**
- **When you place the Intelligent Key outside of the vehicle for a period of time. (When a door is opened and closed, the walk-away lock function will be activated.)**

SETTING MEMORY FUNCTION

The position of the following settings can be linked to the Intelligent Key and the memorized settings can be available for each Intelligent Key.

To use the memory function, set the climate, navigation (if so equipped) and audio systems to the driver's preferred settings. Lock the doors with the Intelligent Key. Each Intelligent Key may be set with the driver's individual preferences.

To engage the memorized settings, perform the following:

1. Carry the Intelligent Key that is linked to the memorized settings.
2. Unlock the doors by pressing the button on the Intelligent Key.
3. Place the ignition switch in the ON position. The settings linked to the Intelligent Key will start.

WARNING SIGNALS

To help prevent the vehicle from moving unexpectedly by erroneous operation of the Intelligent Key or to help prevent the vehicle from being stolen, a chime or buzzer sounds from inside and outside the vehicle and a warning is displayed in the instrument panel.

When a chime or beep sounds or a warning is displayed, be sure to check the vehicle and the Intelligent Key.

For additional information, see "Troubleshooting guide" (P. 197) and "Vehicle information display" (P. 97).

TROUBLESHOOTING GUIDE

Verify the location of all Intelligent Keys that are programmed for the vehicle. If another Intelligent Key is in range or inside the vehicle, the vehicle system may respond differently than expected.

- **When opening the driver's door to get out of the vehicle, the Door/liftgate open warning appears on the display.**
  - The ignition switch may be in the ACC position. Place the ignition switch in the ON position or close the driver's door.
- **When closing the door after getting out of the vehicle, the No Key Detected warning appears on the display, the outside chime sounds three times and the inside warning chime sounds for approximately three seconds.**
  - The engine may be running. Place the ignition switch in the OFF position.
- **When closing the door after getting out of the vehicle, the Rear Door Alert warning message appears on the display, the horn sounds three times twice, or a "Check Rear Seat" warning appears on the display.**
  - The Rear Door Alert may be activated. Check the back seat for all articles, press the OK button to clear the Rear Door Alert warning message.
- **When closing the door after locking with the power door lock switch, the outside chime sounds for approximately three seconds and all the doors unlock.**
  - The Intelligent Key may be inside the vehicle. Carry the Intelligent Key with you.

- **When pushing the door handle request switch or the button on the Intelligent Key to lock the door, the outside chime sounds for approximately 2 seconds.**
  - The Intelligent Key may be inside the vehicle. Carry the Intelligent Key with you.
- **When pushing the ignition switch to start the engine, the Key Battery Low appears on the display.**
  - The battery charge may be low. Replace the battery with a new one. For additional information, see "Intelligent Key battery replacement" (P. 508).
- **When pushing the ignition switch to start the engine, the "Place the key near the start switch" warning appears on the display, the inside chime sounds three times.**
  - The Intelligent Key may be not in the vehicle. Carry the Intelligent Key with you.
- **When pushing the ignition switch, the Key System Fault message appears.**
  - It warns of a malfunction with the Intelligent Key system. It is recommended that you visit a NISSAN dealer.

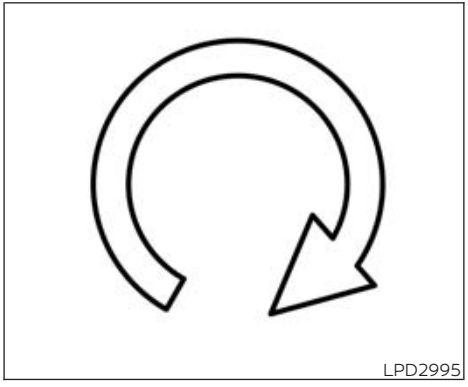

BASIC INFORMATION

The button will be on the NISSAN Intelligent Key® if the vehicle has Remote Engine Start. This feature allows the engine to start from outside the vehicle.

Vehicles with an automatic climate control system may default to either a heating or cooling mode depending on outside and cabin temperatures. For additional information, see "Remote Engine Start with Intelligent Climate Control" (P. 259).

Laws in some local communities may restrict or prohibit the use of Remote Engine Start, or the amount of time a parked vehicle engine may idle. For example, some laws require a person using Remote Engine Start to have the vehicle in view or may restrict idling time except in freezing temperatures. Check local regulations for any requirements.

Other conditions may affect the function of the Remote Engine Start feature. For additional information, see "Conditions the Remote Engine Start will not work" (P. 199).

Other conditions can affect the performance of the Intelligent Key transmitter. For additional information, see "NISSAN Intelligent Key® system" (P. 187).

REMOTE ENGINE START OPERATING RANGE

WARNING

- **To help avoid risk of injury or death through unintended operation of the vehicle and/or its systems, including entrapment in windows or inadvertent door lock activation, do not leave children, people who require the assistance of others or pets unattended in your vehicle. Additionally,**

the temperature inside a closed vehicle on a warm day can quickly become high enough to cause a significant risk of injury or death to people and pets.

- **Do not use Remote Engine Start in closed spaces such as a garage. Do not breathe exhaust gases; they contain colorless and odorless carbon monoxide. Carbon monoxide is dangerous. It can cause unconsciousness or death.**

⚠CAUTION

When the Intelligent Key battery is discharged or other strong radio wave sources are present near the operating location, the Intelligent Key operating range becomes narrower, and the Intelligent Key may not function properly.

The Remote Engine Start function can only be used when the Intelligent Key is within the specified operating range from the vehicle.

The Remote Engine Start operating range is approximately 197 ft (60 m) from the vehicle.

REMOTE STARTING THE VEHICLE

To use the Remote Engine Start feature to start the engine perform the following:

1. Aim the Intelligent Key at the vehicle.
2. Press the button to lock all doors.
3. Within 5 seconds press and hold the button until the turn signal lights flash and the tail lamps turn on. If the vehicle is not within view press and hold the button for at least 2 seconds.

The following events will occur when the engine starts:

- The parking lights will turn on and remain on as long as the engine is running.
- The doors will be locked and the climate control system may come on.
- The engine will continue to run for 20 minutes.

Press and hold the brake then push the push-button ignition switch to the ON position before driving. For additional information, see "Driving the vehicle" (P. 284).

A maximum of one Remote Engine Start is allowed between ignition cycles.

The vehicle must be driven at speeds of 4 mph (7 km/h) before the remote engine start procedure can be used again.

CANCELING A REMOTE ENGINE START

To cancel a Remote Engine Start, perform one of the following:

- Aim the Intelligent Key at the vehicle and press until the parking lights turn off.
- Turn on the hazard indicator flashers.
- Cycle the ignition switch on and then off.
- The 20-minute timer has expired.
- The engine hood has been opened.
- The vehicle is shifted out of P (Park) position.
- The alarm sounds due to illegal entry into the vehicle.
- The ignition switch is pushed without an Intelligent Key in the vehicle.
- The ignition switch is pushed with an Intelligent Key in the vehicle but the brake pedal is not depressed.

CONDITIONS THE REMOTE ENGINE START WILL NOT WORK

The Remote Engine Start will not operate if any of the following conditions are present:

- The ignition switch is placed in the ON position.
- The hood is not securely closed.
- The hazard indicator lights are on.

- The engine is still running. The engine must be completely stopped. Wait at least 6 seconds if the engine goes from running to off.
- The button is not pressed and held for at least 2 seconds.
- The button is not pressed and held within 5 seconds of pressing the lock button.
- The brake is pressed.
- The doors are not closed and locked.
- The liftgate is open.
- The "Key System Fault See Owner's Manual" warning message remains solid in the vehicle information display.
- The alarm sounds due to illegal entry into the vehicle.
- One Remote Engine Start has already been used. (To use the Remote Engine Start function again, the vehicle needs to be driven at speeds of 4 mph (7 km/h)).
- The vehicle is not in P (Park).
- There is a detected registered key already inside of the vehicle.

The Remote Engine Start may display a warning or indicator in the vehicle information display. For additional information, see "Vehicle information display" (P. 97).

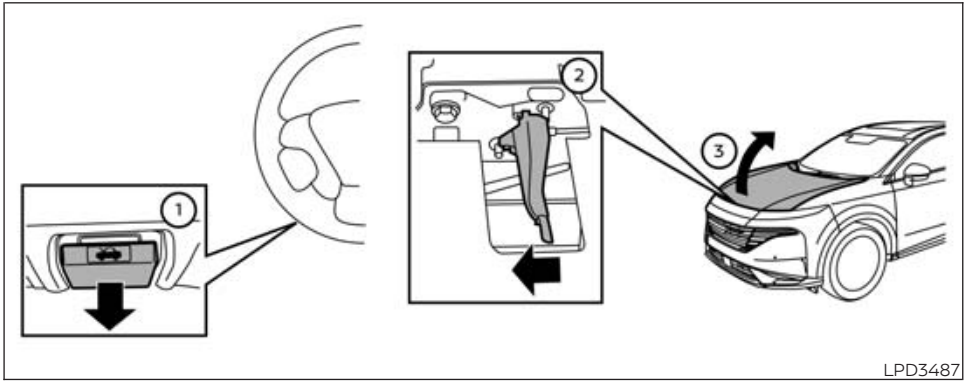

1. Pull the hood lock release handle ① located below the driver side instrument panel until the hood springs up slightly.
2. Locate the lever ② in between the hood and grille and push the lever sideways with your fingertips and raise the hood ③.

When closing the hood, lower the hood to approximately 12 in (30 cm) above the latch and release it. This allows proper engagement of the hood latch.

WARNING

- **Make sure the hood is completely closed and latched before driving. Failure to do so could cause the hood to fly open and result in an accident.**
- **If you see steam or smoke coming from the engine compartment, to avoid injury do not open the hood.**

BASIC INFORMATION

WARNING

- **Always be sure the liftgate has been closed securely to prevent it from opening while driving.**
- **Do not drive with the liftgate open. This could allow dangerous exhaust gases to be drawn into the vehicle. For additional information, see "Exhaust gas (carbon monoxide)" (P. 270).**
- **To help avoid risk of injury or death through unintended operation of the vehicle and/or its systems, including entrapment in windows or inadvertent door lock activation, do not leave children, people who require the assistance of others or pets unattended in your vehicle. Additionally, the temperature inside a closed vehicle on a warm day can quickly become high enough to cause a significant risk of injury or death to people and pets.**
- **Always be sure that hands and feet are clear of the door frame to avoid injury while closing the liftgate.**

CAUTION

Do not use accessory carriers that attach to the liftgate. Doing so will cause damage to the vehicle.

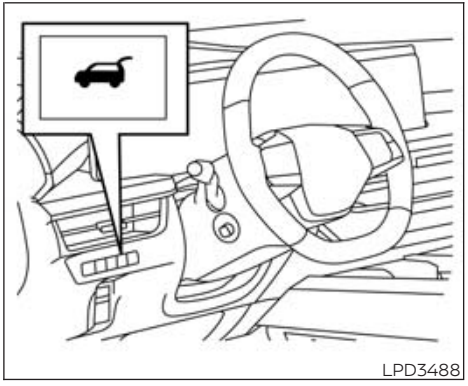

Instrument panel switch

OPERATING THE POWER LIFTGATE

WARNING

- **Make sure that all passengers have their hands, etc., inside the vehicle before closing the liftgate.**
- **Do not leave children unattended inside the vehicle. They could unknowingly activate switches or controls. Unattended children could become involved in serious accidents.**

NOTE:

The transmission must be in P (Park) to open, close or reverse the power liftgate. The power liftgate will not operate if battery voltage is low.

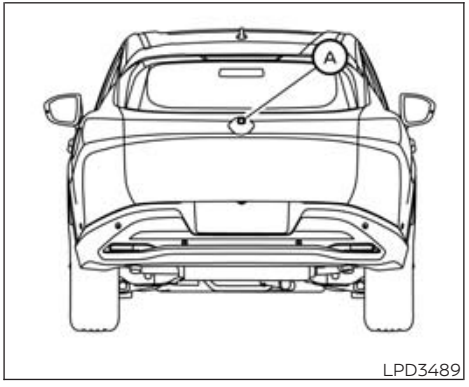

Liftgate opener switch

Power Open:
The power liftgate automatically moves from the fully closed position to the fully open position in approximately 5 – 8 seconds. The power open feature can be activated with the Intelligent Key, the instrument panel switch or the liftgate opener switch Ⓐ. A chime sounds to indicate the power open sequence has been started.

- The liftgate can be opened with the instrument panel switch, liftgate opener switch Ⓐ with the Intelligent Key in operating range and liftgate button on the Intelligent Key, even if the vehicle is locked. The liftgate will individually unlock and open. Once the liftgate is closed, the vehicle will remain in the locked status.
- The Intelligent Key button must be held for 1 second before the liftgate opens.
- The liftgate must be unlocked to open it with the liftgate opener switch Ⓐ if the Intelligent Key is not in operating range.
- The switch on the liftgate Ⓐ can only be used to open the liftgate if the Power Back Door feature is switched to ON using the "Vehicle Settings" menu in the vehicle information display. For additional information, see "Vehicle information display (P. 97).

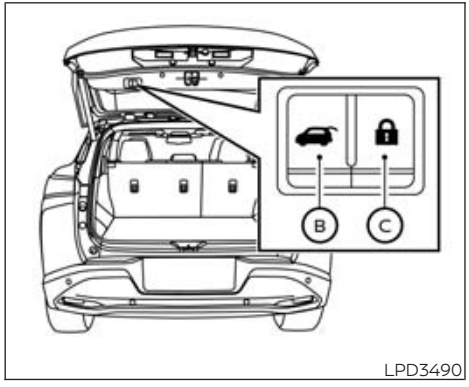

Liftgate close and lock switch

Power Close:

The power liftgate automatically moves from the fully open position to the secondary position. When the liftgate reaches the secondary position, the cinching motor engages and pulls the liftgate to its primary latch position. Power close takes approximately 7 – 10 seconds. The power close feature can be activated by the Intelligent Key button, the instrument panel switch, the liftgate close switch Ⓑ or the liftgate lock switch Ⓒ. A chime sounds to indicate the power close sequence has been started.

- If the liftgate opener switch Ⓐ is pushed while the cinching motor is engaged, the cinching motor will disengage and release the latch.
- The Intelligent Key button must be held for 1 second before the liftgate closes.
- The liftgate close switch Ⓑ can only be used to close the liftgate if the Power Back Door feature is enabled.
- The liftgate lock switch Ⓒ will close the liftgate and lock all doors with the Intelligent Key in operating range.

Reverse:

The power liftgate will stop immediately during power open or power close if the Intelligent Key button, instrument panel switch, liftgate opener switch Ⓐ, liftgate close switch Ⓑ or liftgate lock switch Ⓒ is pushed. The power liftgate will reverse direction if the Intelligent Key button, instrument panel switch, liftgate opener switch Ⓐ or liftgate close switch Ⓑ is pushed a second time. A chime will sound to announce the reversal.

Auto Reverse:

If an obstacle is detected during power open or power close, a warning chime will sound and the liftgate will stop, reverse direction and stop.

A pinch strip is mounted on each side of the liftgate. If an obstacle is detected by a pinch strip during power close, the liftgate will reverse direction and stop.

NOTE:

If the pinch strip is damaged or removed, the power close function will not operate.

⚠WARNING

There are some small distances immediately before the closed position which cannot be detected. Make sure that all passengers have their hands, etc., inside the vehicle before closing the liftgate.

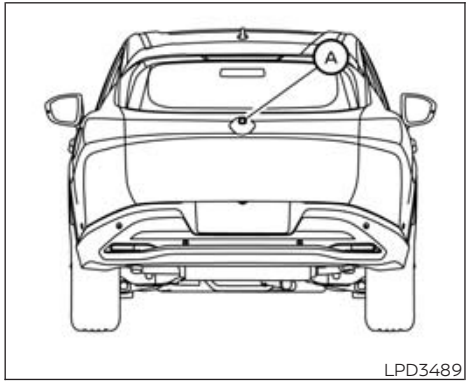

Manual Mode:
If power operation is not available, the liftgate may be operated manually. Power operation may not be available if multiple obstacles have been detected in a single power cycle or if battery voltage is low.

If the liftgate opener switch Ⓐ is pushed during power open or close, the power operation will be canceled and the liftgate can be operated manually.

To open the liftgate manually, push the liftgate opener switch Ⓐ and lift the liftgate.

To close, lower and push the liftgate down securely.

Auto Power Liftgate System Battery Power Saving Mode:
The vehicle goes into power saving mode when the liftgate is open for a long time (approximately 12 hours). This is to prevent deterioration of the battery. The power saving mode automatically cuts the power supply of the power liftgate door.

When the power to the liftgate is cut off, the manual mode must be performed. After the manual mode is performed, the power liftgate function is restored.

NOTE:

When a battery voltage is lower than approximately 11V, the power liftgate may not operate after automatic return.

MOTION-ACTIVATED LIFTGATE (if so equipped)

Basic information

The liftgate can be operated using a quick kicking motion under the center of the rear bumper.

To operate, the Intelligent Key must be within 47 in (120 cm) of the liftgate.

NOTE:

Tow hitches are available as an accessory for this vehicle. If a tow hitch is installed, the Motion-Activated Liftgate electronic control unit (ECU) needs to be replaced with an ECU programmed with towing logic for the Motion-Activated Liftgate to function properly.

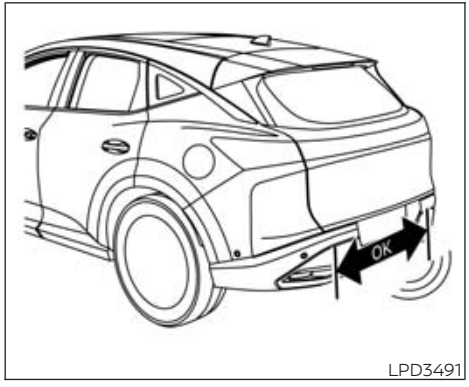

Activation zone

Proper operation technique

- While at the rear of the vehicle, begin making a quick forward kicking motion.
- Raise your foot straight under the center of the rear bumper then immediately return your foot to the ground in a continuous motion.
- The kicking motion should be straight, smooth and consistent.
- After your kick motion is complete, step back and allow the liftgate to open/close.
- Three beeps will sound and the liftgate will begin moving within two seconds after the kick.

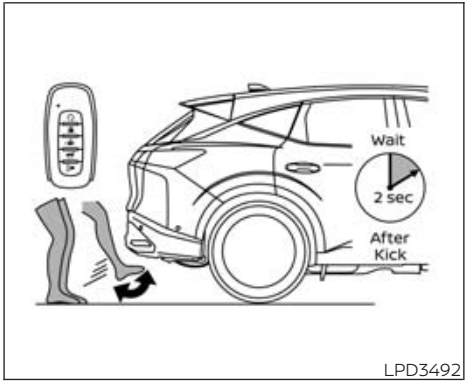

DO: Quick forward kick and return while the key fob is within range

⚠CAUTION

Before performing the kicking motion, steady your stance to prevent any loss of balance. Also, while making the kicking motion, take caution around hot exhaust system parts. Otherwise, there may be danger of injury.

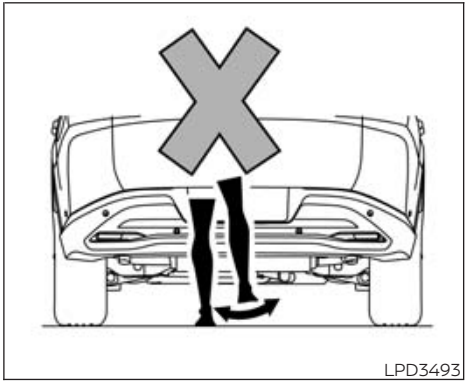

DO NOT: Swing foot side to side or pause during kick

⚠WARNING

Prevent unintentional liftgate opening/closing. There may be conditions when opening/closing the liftgate is not desired. Keep the Intelligent Key out of range of the liftgate, (47 in or 120 cm), when washing or working around the back of the vehicle.

⚠ CAUTION

- **Interference or malfunction can be caused by parking in close proximity to radio or satellite towers.**
- **Intelligent Key interference could be caused if you have your key fob stored next to your cell phone or any RF-enabled smart card. For additional information, see "NISSAN Intelligent Key® system" (P. 187).**

LIFTGATE RELEASE

Basic information

⚠ WARNING

- **Always be sure the liftgate has been closed securely to prevent it from opening while driving.**
- **Do not drive with the liftgate open. This could allow dangerous exhaust gases to be drawn into the vehicle. For additional information, see "Exhaust gas (carbon monoxide)" (P. 270).**
- **To avoid personal injury, do not attempt to activate the power liftgate if one or both of the liftgate struts are removed.**

⚠ CAUTION

- **If the power liftgate does not stay open or if the liftgate unexpectedly closes at any time while a continuous warning chime sounds, do not operate the liftgate. There may be a pressure loss in one or both of the liftgate struts. It is recommended that you have the liftgate inspected. It is recommended that you visit a NISSAN dealer for this service.**
- **Do not activate the power liftgate if one or both of the liftgate struts are removed. Damage to the liftgate or power liftgate mechanisms may occur.**

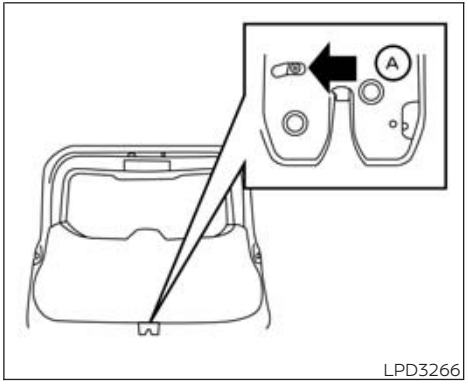

LPD3266

Liftgate release

The liftgate release mechanism allows the liftgate to be opened in the event of a discharged battery.

To release the liftgate from the inside of the vehicle, perform the following operations:

1. Move the lever Ⓐ as illustrated to open the liftgate.
2. Push the liftgate up to open.

NOTE:

If you had to open the liftgate using this procedure, have your vehicle checked as soon as possible. It is recommended that you visit a NISSAN dealer for this service.

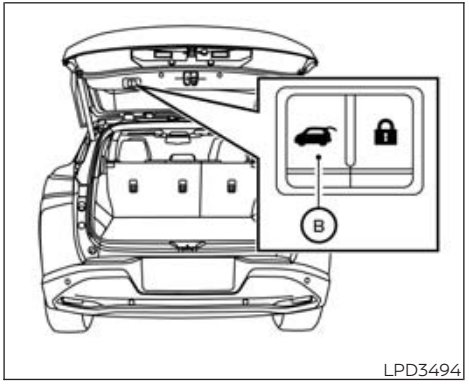

LIFTGATE POSITION SETTING

The liftgate can be set to open to a specific height (garage mode) by performing the following:

1. Open the liftgate using the liftgate instrument panel switch, liftgate opener switch or the Intelligent Key button.
2. Pull the liftgate down and move to the desired height position (the liftgate will have some resistance when being manually adjusted).
3. Push and hold the power liftgate close switch Ⓑ located on the liftgate for more than 3 seconds or until two beeps are heard.

The liftgate will open to the selected position setting. To change the position of the liftgate, repeat steps 1-3 for setting the position of the liftgate.

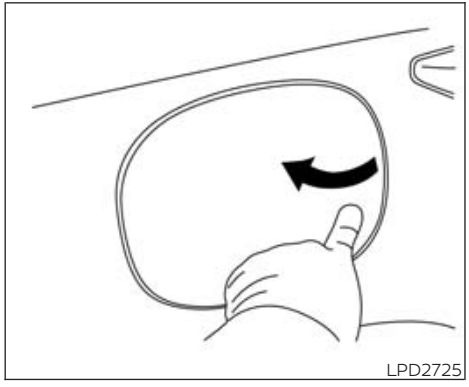

OPENING THE FUEL-FILLER DOOR

To open the fuel-filler door, push the right side of the fuel-filler door to release.

⚠WARNING

- **Gasoline is extremely flammable and highly explosive under certain conditions. You could be burned or seriously injured if it is misused or mishandled. Always stop the engine and do not smoke or allow open flames or sparks near the vehicle when refueling.**
- **Do not attempt to top off the fuel tank after the fuel pump nozzle shuts off automatically. Continued refueling may cause fuel overflow, resulting in fuel spray and possibly a fire.**
- **Never pour fuel into the throttle body to attempt to start your vehicle.**
- **Do not fill a portable fuel container in the vehicle or trailer. Static electricity can cause an explosion of flammable liquid, vapor or gas in any vehicle or trailer. To reduce the risk of serious injury or death when filling portable fuel containers:**
  - **Always place the container on the ground when filling.**
  - **Do not use electronic devices when filling.**
  - **Keep the pump nozzle in contact with the container while you are filling it.**
  - **Use only approved portable fuel containers for flammable liquid.**

⚠CAUTION

- **Do not use a fuel containing more than 15% ethanol in your vehicle. For additional information, see "Fuel recommendation" (P. 558).**
- **For additional information, see "Malfunction Indicator Light (MIL)" (P. 94).**
- **If fuel is spilled on the vehicle body, flush it away with water to avoid paint damage.**

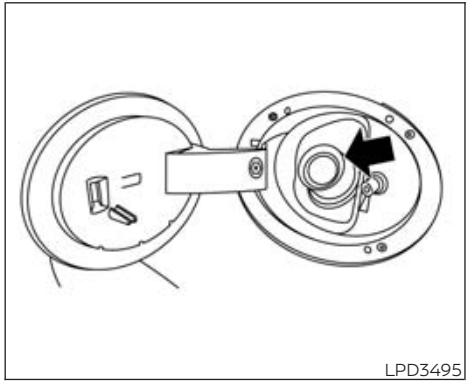

HOW TO REFUEL

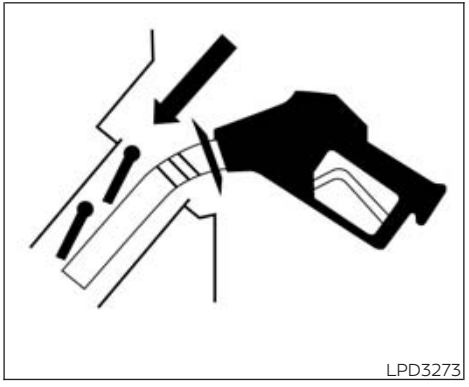

The fuel tank is not equipped with a fuel filler cap. After opening the fuel-filler door, insert the fuel pump nozzle directly into the fuel-filler opening. When the fuel pump nozzle is pulled out, the fuel filler opening will be sealed.

To refuel:

Be sure to insert the fuel pump nozzle slowly into the fuel-filler opening as far as it will go before fueling.

Never move the nozzle during the refueling.

Pull out the nozzle approximately 5 seconds after the fuel pump nozzle shuts off automatically (initial shut-off).

Close the fuel-filler door after refueling.

If you need to refuel from a portable fuel container, use the funnel supplied with your vehicle. For additional information, see "When refueling from a portable fuel container" (P. 210).

⚠ CAUTION

- **Do not attempt to open the flaps on the fuel-filler opening using any tool other than the fuel pump nozzle.**
- **This fuel-filler opening is only conformable to normal fuel pump nozzles at gas stations. Using a nozzle with a small diameter may damage the opening and the fuel system.**
- **If fuel is spilled on the vehicle body, flush it away with water to avoid paint damage.**

⚠ WARNING

- **Gasoline is extremely flammable and highly explosive under certain conditions. You could be burned or seriously injured if it is misused or mishandled. Always stop the engine and do not smoke or allow open flames or sparks near the vehicle when refueling.**
- **Do not attempt to top off the fuel tank after the fuel pump nozzle shuts off automatically. Continued refueling may cause fuel overflow, resulting in fuel spray and possibly a fire.**
- **Never pour fuel into the throttle body to attempt to start your vehicle.**
- **Do not fill a portable fuel container in the vehicle or trailer. Static electricity can cause an explosion of flammable liquid, vapor or gas in any vehicle or trailer. To reduce the risk of serious injury or death when filling portable fuel containers:**
  - **Always place the container on the ground when filling.**
  - **Do not use electronic devices when filling.**
  - **Keep the pump nozzle in contact with the container while you are filling it.**
  - **Use only approved portable fuel containers for flammable liquid.**

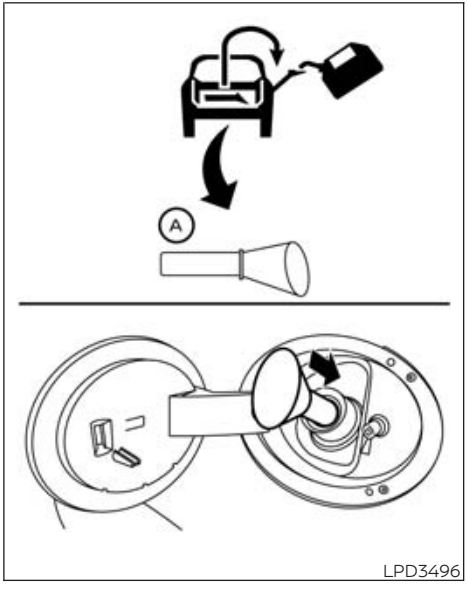

LPD3496

WHEN REFUELING FROM A PORTABLE FUEL CONTAINER

If you need to refuel from a portable fuel container, use the funnel Ⓐ stored in the cargo area under the luggage board.

Be sure to insert the funnel into the fuel-filler opening slowly and fully. Insert the nozzle of the portable fuel container into the opening along the funnel and fill the fuel tank.

After refueling, remove the funnel from the fuel-filler opening. Wipe the funnel clean and return it to the tool bag.

⚠CAUTION

- **Do not insert the nozzle of the portable fuel container directly into the fuel-filler opening. Doing so may damage the opening and the fuel system.**
- **Use only the funnel provided with your vehicle. Otherwise the fuel-filler opening and the fuel system may be damaged.**

BASIC INFORMATION

⚠WARNING

- **Do not adjust the steering wheel while driving. You could lose control of your vehicle and cause an accident.**
- **Do not adjust the steering wheel any closer to you than is necessary for proper steering operation and comfort. The driver's air bag inflates with great force. If you are unrestrained, leaning forward, sitting sideways or out of position in any way, you are at greater risk of injury or death in a crash. You may also receive serious or fatal injuries from the air bag if you are up against it when it inflates. Always sit back against the seatback and as far away as practical from the steering wheel. Always use the seat belts.**

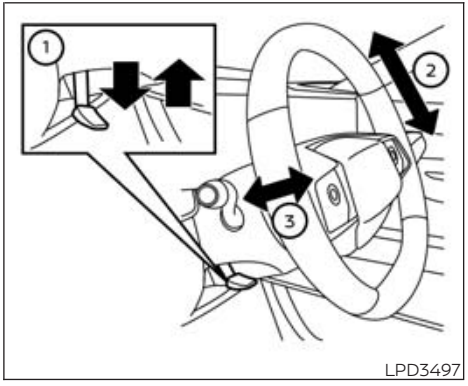

LPD3497

MANUAL OPERATION (if so equipped)

Tilt and telescopic operation

Push the lock lever ① down:

- Adjust the steering wheel up or down in direction ② to the desired position.
- Adjust the steering wheel forward or backward in direction ③ to the desired position.

Pull the lock lever ① up firmly to lock the steering wheel in place.

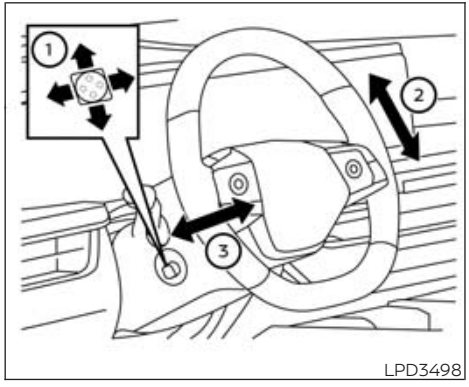

LPD3498

POWER OPERATION (if so equipped)

Tilt and telescopic operation

To adjust the steering wheel move the switch ① in the following directions:

- Adjust the steering wheel up or down in direction ② to the desired tilt position.
- Adjust the steering wheel forward or backward in direction ③ to the desired telescopic position.

Entry/Exit function

The memory seat will make the steering wheel move up automatically when the driver's door is opened and the ignition switch is in the LOCK position. This lets the driver get into and out of the seat more easily. The steering wheel moves back into position when the driver's door is closed and the ignition switch is pushed.

For additional information, see "Memory seat" (P. 218).

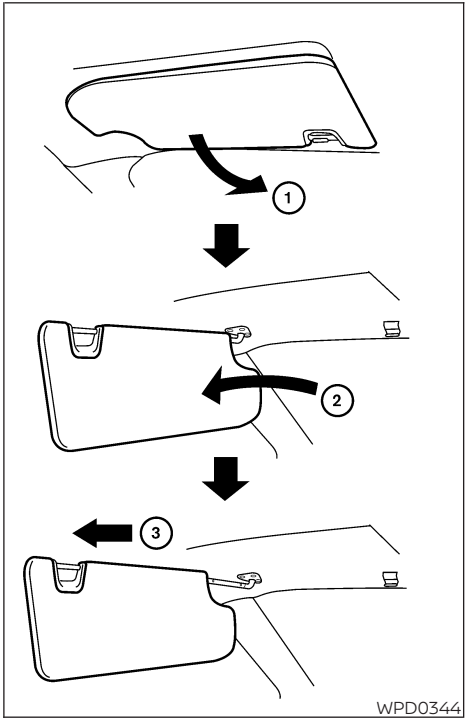

WPD0344

BASIC INFORMATION

1. To block glare from the front, swing down ① the main sun visor.
2. To block glare from the side, remove the main sun visor from the center mount and swing the visor to the side ②.
3. To extend ③ the sun visor, slide in or out as needed.

⚠CAUTION

- **Do not store the sun visor before returning the extension to its original position.**
- **Do not pull the extension sun visor forcedly downward.**

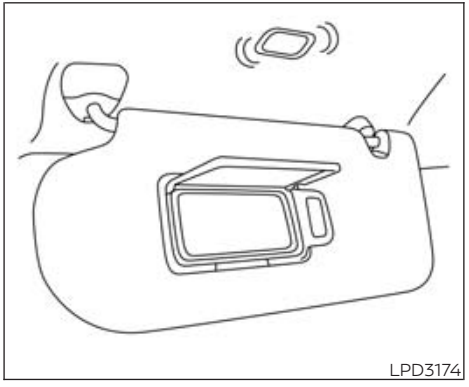

VANITY MIRRORS

To access the vanity mirror, pull the sun visor down and flip open the mirror cover. The vanity mirror will illuminate when the mirror cover is open.

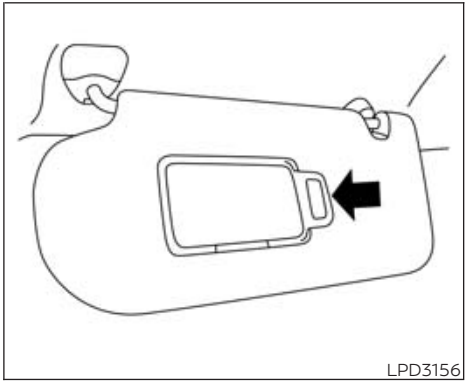

Driver's and passenger's side

CARD HOLDER

To use the card holder, slide card into the clip. Do not view information while operating the vehicle.

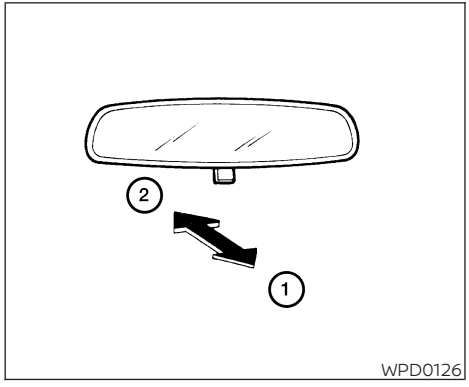

MANUAL ANTI-GLARE REARVIEW MIRROR (if so equipped)

Use the night position ① to reduce glare from the headlights of vehicles behind you at night.

Use the day position ② when driving in daylight hours.

⚠ WARNING

Use the night position only when necessary, because it reduces rear view clarity.

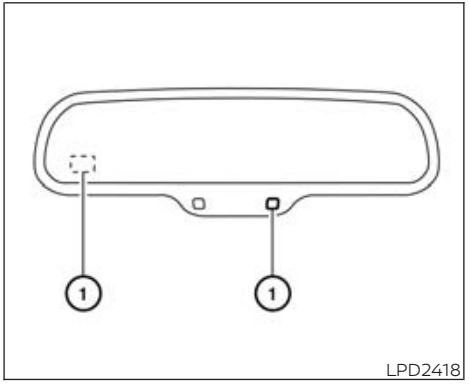

AUTOMATIC ANTI-GLARE REARVIEW MIRROR (if so equipped)

Type A (if so equipped)

The inside mirror is designed so that it automatically dims during night time conditions and according to the intensity of the headlights of the vehicle following you. The automatic anti-glare feature is activated when the ignition switch is in the ON position.

NOTE:

Do not hang any objects over the sensors ① or apply glass cleaner to the sensors. Doing so will reduce the sensitivity of the sensors, resulting in improper operation.

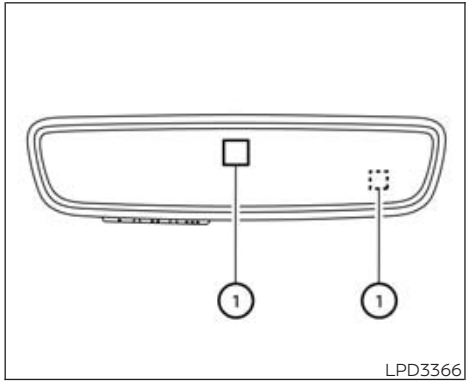

Type B (if so equipped)

The inside mirror is designed so that it automatically dims during nighttime conditions and according to the intensity of the headlights of the vehicle following you. The automatic anti-glare feature is activated when the ignition switch is in the ON position.

NOTE:

Do not hang any objects over the sensors ① or apply glass cleaner to the sensors. Doing so will reduce the sensitivity of the sensors, resulting in improper operation.

For additional information, see "HomeLink® Universal Transceiver" (P. 176).

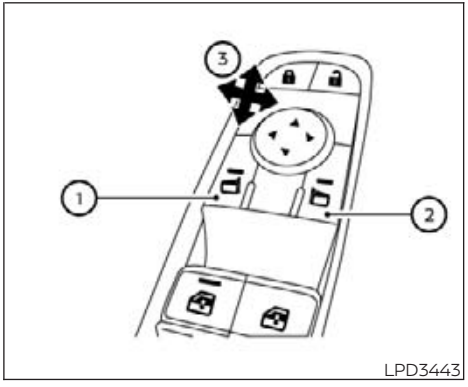

OUTSIDE MIRRORS

Basic information

The outside mirror remote control will operate when the ignition switch is in the OFF, ACC or ON position.

Push the switch ① or ② to select the left or right mirror. Adjust each mirror to the desired position using the large switch ③. Push the switch ① or ② and make sure that the corresponding light is off, to prevent accidentally moving the mirror.

⚠ WARNING

- **Do not adjust the mirrors while driving. You could lose control of your vehicle and cause an accident.**
- **Objects viewed in the outside mirror on the passenger side are closer than they appear. Be careful when moving to the right. Using only this mirror could cause an accident. Use the inside mirror or glance over your shoulder to properly judge distances to other objects.**

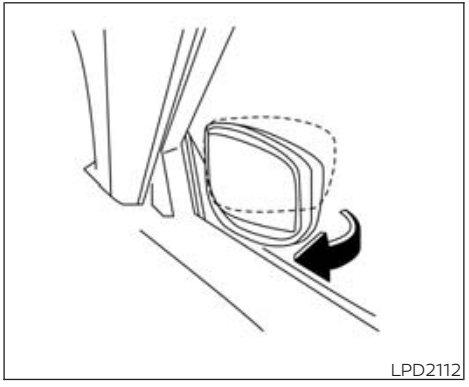

Manual folding outside mirrors (if so equipped)

Pull the outside mirror toward the door to fold it.

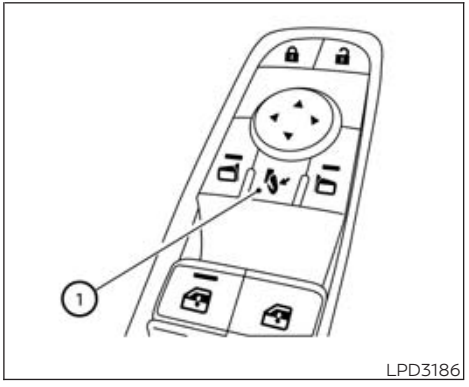

Power folding outside mirrors (if so equipped)

⚠ CAUTION

- **Do not touch the mirrors while they are moving. Your hand may be pinched, and the mirror may malfunction.**
- **Do not drive with the mirrors stored. You will be unable to see behind the vehicle.**

Push the switch ① to open the mirrors. Push the switch again to close the mirrors.

If one of the mirrors are manually operated or bumped, the mirror body can become loose at the pivot point. To correct electronic mirror operation, cycle the mirrors by pushing the switch ① until completely closed, then push the switch again until the mirrors are in the open position

Automatic folding outside mirrors (if so equipped)

- The outside mirrors fold automatically when the vehicle is locked with the Intelligent Key or a request switch.
- The outside mirrors unfold automatically when the vehicle is unlocked with the Intelligent Key, a request switch or the ignition switch is place in the ON position. Unfold settings can be adjusted in the vehicle information display.
- This feature can be disabled in the vehicle information display.

For additional information, see "Vehicle Settings" (P. 111).

Heated mirrors

The outside mirrors can be heated to defrost, defog, or de-ice for improved visibility. For additional information, see "Rear window and outside mirror defroster switch" (P. 135).

Reverse tilt-down feature (if so equipped)

The reverse tilt-down feature will turn both outside mirror surfaces downward to provide better rear visibility close to the vehicle when the mirror control switch is in either the L or R position.

The mirrors automatically return to their original position when you shift out of R (Reverse).

The outside mirror surfaces will return to their original position when one of the following conditions has occurred:

- The transmission is in any position other than R (Reverse).
- The outside mirror control switch is set to the neutral or center position.
- The ignition switch is placed in the OFF position.

The reverse tilt positions can be changed. While in R (Reverse), adjust the glass positions to the desired location. The next time the vehicle is shifted into R (Reverse), the glass positions will go to the newly set positions. Additionally, the changed reverse tilt positions can be saved to a memory seat position. After the reverse tilt glass positions have been changed, vehicle is shifted back into park and glass has returned to their original positions, push the Set switch and push the desired memory switch (1 or 2) to assign the new reverse tilt position memory.

NOTE:

If the outside mirror control switch is in the center position, the mirror surfaces will NOT turn downward when shifted to R (Reverse).

For additional information, see "Memory seat" (P. 218).

BASIC INFORMATION

The memory seat system has the following features:

- Memory storage function
- Linking the memory position to a stored user profile and key
- Entry/exit function

NOTE:

The steering wheel memory feature is only equipped if your vehicle is fitted with power operation.

Linking the memory position to a stored user profile automatically saves the driver's last seat, outside mirrors and steering wheel positions when the ignition is switched from the ON to OFF. This will save the memory to the current user profile. For additional information, see "Linking the memory position to a stored user profile and Intelligent Key" (P. 219).

Each memory switch button (1 or 2) on the driver's door can also store one additional position. This feature is independent from the linked memory to user profile.

The Entry/exit function allows users easy entry/exit of the vehicle. For additional information, see "Entry/exit function" (P. 219).

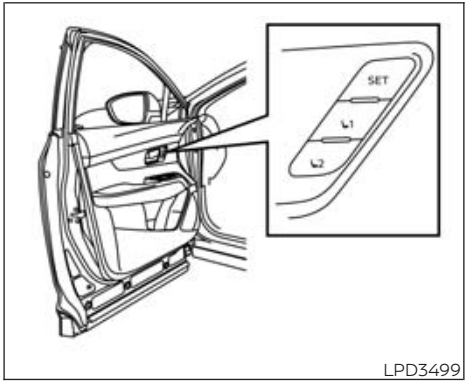

LPD3499

MEMORY STORAGE FUNCTION

Basic information

This is used to save two unique memory positions for driver seat, steering and outside mirrors. The memory positions can be saved using the door memory switches M1 and M2, see in above picture. The door memory switches are independent from the linked memory to user profile system.

Follow the procedures to use the memory system.

1. Place the ignition in the ON position. The vehicle should be in the (P) Park position while setting the memory.
2. Adjust the driver's seat, steering wheel and outside mirrors to the desired positions by manually operating each adjusting switch. For additional information, see "Seats" (P. 12), "Steering wheel" (P. 211) and "Outside mirrors" (P. 215).
3. Push the SET switch and, within 5 seconds, push the memory switch (1 or 2).
4. The indicator light for the pushed memory switch will come on and stay on for approximately 5 seconds.
5. The chime will sound if the memory has been stored.

   NOTE:
   This saved memory position is not linked to the user profile memory or Intelligent Key.

Recalling switch memory positions

To recall the manually stored positions, push the memory switch (1 or 2). The driver's seat, outside mirrors and steering wheel will move to the positions stored to those buttons.

Confirming memory storage

- Push the SET switch.
- If a memory position has been stored in the switch (1 or 2) then the indicator light for the respective switch will stay on for approximately 5 seconds.

Linking the memory position to a stored user profile and Intelligent Key

The profiled user function can be linked to a stored memory position with the following procedure.

1. Place the ignition switch in the ON position while carrying the Intelligent Key that was registered to the vehicle with a user.

   NOTE:
   By default the user profile is set up with one Intelligent Key linked to a single user and one Intelligent Key not linked. Should both Intelligent Keys be linked to one profile, create a new profile for the second Intelligent Key. For Ideal usage, one user profile should have one Intelligent Key linked to it.

   NOTE:
   Make sure only one Intelligent Key is inside the vehicle during the set up process. If multiple Intelligent keys are inside the vehicle, the vehicle may detect the wrong Intelligent Key.

2. Adjust the position of the driver's seat, outside mirrors and steering wheel.

3. Place the ignition switch in the OFF position. The next time you enter with a registered Intelligent Key and the ignition is switched to the ON position, the system will automatically adjust to the memorized driving position.

NOTE:

The "Guest" profile will not link to any Intelligent Key and will not save a driving position. During memory recall, guest will not be recalled when the ignition switch is placed in the ON position. Instead, the last profile used will be recalled.
If both Intelligent Key's are in the vehicle at the same time, only the last used Intelligent Key will recall a memory profile.

After a factory reset all User profiles present on the multimedia display will be erased. Follow the procedure in the separate NissanConnect® Owner's Manual (if so equipped) for user creation. The Intelligent Key present in the vehicle at this time will be automatically linked to the new User profile.
The vehicle might come from the factory with User 1 profile already created and linked to any of the Intelligent Key's. you must perform a factory reset to delete this User profile.

ENTRY/EXIT FUNCTION

This system is designed so that the driver's seat and steering wheel will automatically move when shifting into the P (Park) position. This allows the driver to easily get in and out of the driver's seat.

The driver's seat will slide backward and the steering wheel will move up:

- When the ignition is switched to OFF and the driver's door is open.
- When the ignition is switched from ON to OFF with the driver's door open.

The driver's seat and steering wheel will return to the previous position:

- When the ignition switch is switched to ON and the shift position is in P (Park).

The entry/exit function can be enabled or disabled through the "Vehicle Settings" in the vehicle information display by performing the following:

- Switch the Exit Seat Slide from ON to OFF.
- Switch the Exit Steering Up from ON to OFF.

NOTE:

If a Guest profile is used during a trip and the seat is manually adjusted then when Ignition is switched from ON to OFF the seat and Steering wheel will move to the easy exit position of the last User profile, not to the manually adjusted Guest position.

SYSTEM OPERATION

The memory seat system will not work or will stop operating under the following conditions:

- When the vehicle speed is above 2 mph (3 km/h).
- When any of the memory switches are pushed while the memory seat system is operating.
- When the switch for the driver's seat and steering wheel is pushed while the memory seat system is operating.
- When the seat has already been moved to the memorized position.
- When no seat position is stored in the memory switch.
- When the shift position is moved from P (Park) to any other position.

4 Monitor, climate, audio, phone and voice recognition systems

NissanConnect® Owner's Manual 223
Safety Note 223
Safety Information 224
USB memory device, iPod® and Bluetooth® audio player 224
RearView Monitor (if so equipped) 225
- Basic Information 225
- RearView Monitor system operation 226
- How to read the displayed lines 226
- Difference between predicted and actual distances 227
- How to park with predicted course lines 229
- Adjusting the screen 230
- How to turn on and off predicted course lines 230
- RearView Monitor system limitations 231
- System maintenance 232

Intelligent Around View® Monitor (if so equipped) 233
- Basic Information 233
- Intelligent Around View® Monitor system operation 234
- Difference between predicted and actual distances 242
- How to park with predicted course lines 243
- How to switch the display 244
- Adjusting the screen 246
- Setting the Vehicle Color 246
- Camera Widgets 246
- Intelligent Around View® Monitor system limitations 246
- System maintenance 248

Moving Object Detection (MOD) (if so equipped) 249
- Basic Information 249
- MOD system operation 250
- Turning MOD on and off 252
- MOD system limitations 253
- System maintenance 254

Vents 254
Heater and air conditioner (automatic) 255
- Basic information 255
- Automatic operation 258
- Manual operation 259
- Heater and air conditioner settings 260
- Operating tips 261

Servicing air conditioner 262

Antenna 262
Roof Mounted Antenna 262
GNSS ANTENNA (for ProPILOT Assist 2.1) (if so equipped) 263
Car phone or CB radio 263
iPod®/iPhone® 264

NissanConnect® OWNER'S MANUAL

LHA6820

QR code (U.S. only)

Refer to the digital NissanConnect® Owner's manual using the QR code on this page (U.S. only), or your printed NissanConnect® Owner's manual (if so equipped). This manual includes the following information:

- NissanConnect® Services
- Navigation system (if so equipped)
- Audio system
- Apple CarPlay®
- Android Auto™
- Bluetooth® Hands-Free Phone system
- Viewing information
- Other settings
- Voice recognition
- General system information

SAFETY NOTE

⚠ WARNING

- **Do not disassemble or modify this system. If you do, it may result in accidents, fire, or electric shock.**
- **Do not use this system if you notice any abnormality, such as a frozen screen or lack of sound. Continued use of the system may result in accident, fire or electric shock.**
- **In case you notice any foreign object in the system hardware, spill liquid on it, or notice smoke or smell coming from it, stop using the system immediately. It is recommended you visit a NISSAN dealer for servicing. Ignoring such conditions may lead to accidents, fire, or electric shock.**
- **Park the vehicle in a safe location and apply the parking brake to view the images on the touch-screen display.**

Do not attempt to operate the system in extreme temperature conditions [below −4°F (−20°C) and above 158°F (70°C)]. Operating this system under these conditions may result in system malfunctions.

⚠ WARNING

- **To operate the system, first park the vehicle in a safe location and set the parking brake. Operating the system while driving can distract the driver and may result in a serious accident.**
- **Exercise extreme caution at all times so full attention may be given to vehicle operation. If the system does not respond immediately, please be patient and keep your eyes on the road. Inattentive driving may lead to a crash resulting in serious injuries or death.**
- **Laws in some jurisdictions may restrict the use of some of the applications and features such as "Text-to-Speech", social networking, and texting. Check local regulations for any requirements before using this feature.**
- **To avoid risk of death or serious personal injury when parking the vehicle with the engine turned on, it should be kept in a well-ventilated area to avoid exposure to carbon monoxide. Do not breathe exhaust gases; they contain colorless and odorless carbon monoxide. Carbon monoxide is dangerous. It can cause unconsciousness or death.**
  - **Apply the parking brake.**
  - **Do not allow children, pets or people who may need assistance to remain in the vehicle.**
  - **Do not leave the vehicle unattended to prevent unauthorized use of the vehicle.**

USB MEMORY DEVICE, iPod® AND Bluetooth® AUDIO PLAYER

⚠ WARNING

Do not connect, disconnect or operate the USB device while driving. Doing so can be a distraction. If distracted you could lose control of your vehicle and cause an accident or serious injury.

REARVIEW MONITOR (if so equipped)

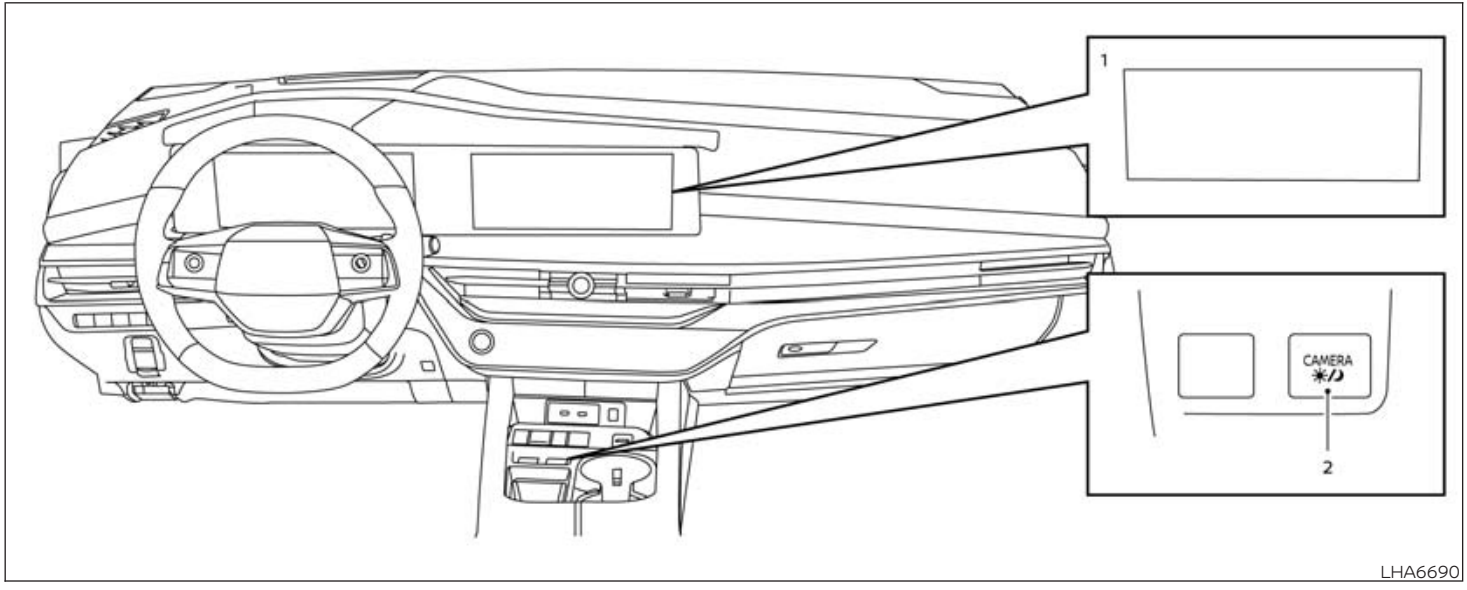

LHA6690

BASIC INFORMATION

1. Display screen
2. CAMERA button

⚠WARNING

- **Failure to follow the warnings and instructions for proper use of the RearView Monitor system could result in serious injury or death.**

- **RearView Monitor is a convenience feature and is not a substitute for proper backing. Always turn and look out the windows and check mirrors to be sure that it is safe to move before operating the vehicle. Always back up slowly.**

- **The system is designed as an aid to the driver in showing large stationary objects directly behind the vehicle, to help avoid damaging the vehicle.**
- **The distance guide line and the vehicle width line should be used as a reference only when the vehicle is on a level paved surface. The distance viewed on the monitor is for reference only and may be different than the actual distance between the vehicle and displayed objects.**

⚠ CAUTION

Do not scratch the camera lens when cleaning dirt or snow from the front of the camera.

The RearView Monitor system automatically shows a rear view of the vehicle when pressing the R (Reverse) button. While in the R (Reverse) position, pressing the CAMERA button will turn the predicted course lines off or on. The radio can still be heard while the RearView Monitor is active.

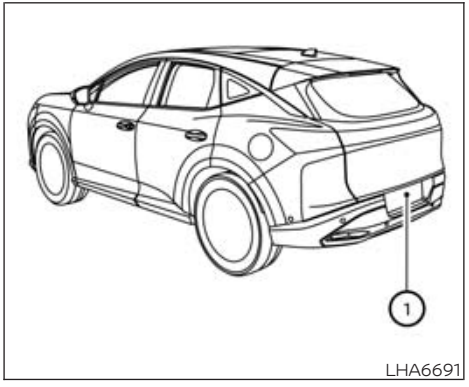

LHA6691

To display the rear view, the RearView Monitor system uses a camera located just above the vehicle's license plate ①.

REARVIEW MONITOR SYSTEM OPERATION

With the vehicle ON, press the shift button to the R (Reverse) position to operate the RearView Monitor.

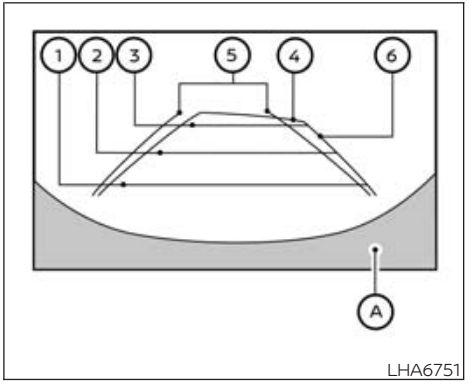

LHA6751

HOW TO READ THE DISPLAYED LINES

Guiding lines which indicate the vehicle width and distances to objects with reference to the vehicle body line Ⓐ are displayed on the monitor.

Distance guide lines

Indicate distances from the vehicle body.

- Red line ①: approximately 1.5 ft (0.5 m)
- Blue line ②: approximately 3 ft (1 m)
- Blue line ③: approximately 7 ft (2 m)
- Blue line ④: approximately 10 ft (3 m) (if so equipped)

Vehicle width guide lines ⑤

Indicate the vehicle width when backing up.

Predicted course lines ⑥

Indicate the predicted course when backing up. The predicted course lines will be displayed on the monitor when the shift position is in R (Reverse) and the steering wheel is turned. The predicted course lines will move depending on how much the steering wheel is turned.

The vehicle width guide lines and the width of the predicted course lines are wider than the actual width and course.

DIFFERENCE BETWEEN PREDICTED AND ACTUAL DISTANCES

Basic Information

The displayed guidelines and their locations on the ground are for approximate reference only. Objects on uphill or downhill surfaces or projecting objects will be actually located at distances different from those displayed in the monitor relative to the guidelines (refer to illustrations). When in doubt, turn around and view the objects as you are backing up, or park and exit the vehicle to view the positioning of objects behind the vehicle.

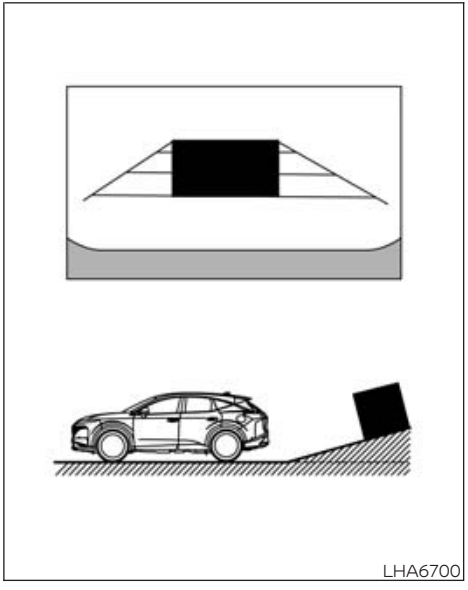

Backing up on a steep uphill

When backing up the vehicle up a hill, the distance guide lines and the vehicle width guide lines are shown closer than the actual distance. Note that any object on the hill is further than it appears on the monitor.

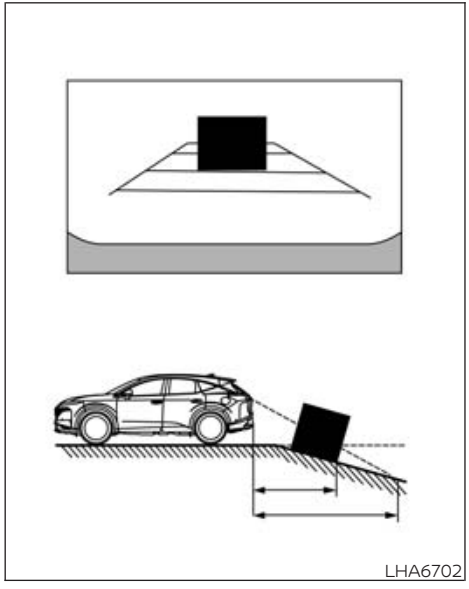

Backing up on a steep downhill

When backing up the vehicle down a hill, the distance guide lines and the vehicle width guide lines are shown farther than the actual distance. Note that any object on the hill is closer than it appears on the monitor.

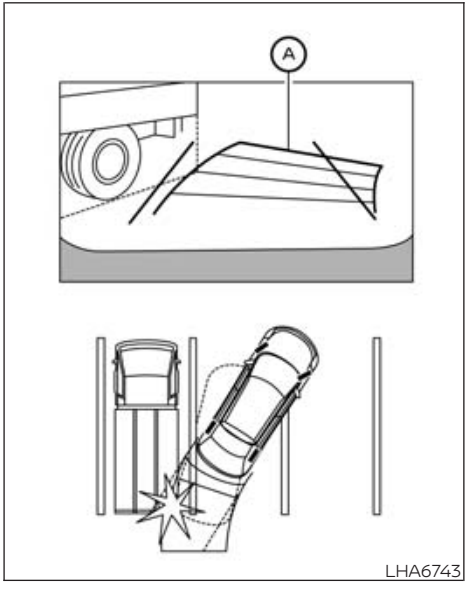

Backing up near a projecting object

The predicted course lines Ⓐ do not touch the object in the display. However, the vehicle may hit the object if it projects over the actual backing up course.

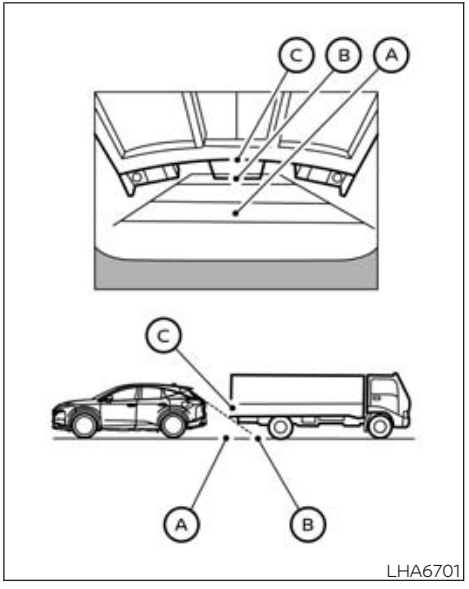

Backing up behind a projecting object

The position Ⓒ is shown farther than the position Ⓑ in the display. However, the position Ⓒ is actually at the same distance as the position Ⓐ. The vehicle may hit the

object when backing up to the position Ⓐ if the object projects over the actual backing up course.

HOW TO PARK WITH PREDICTED COURSE LINES

⚠ WARNING

- **If the tires are replaced with different sized tires, the predicted course lines may be displayed incorrectly.**
- **On a snow-covered or slippery road, there may be a difference between the predicted course line and the actual course line.**
- **If the battery is disconnected or becomes discharged, the predicted course lines may be displayed incorrectly. If this occurs, please perform the following procedures:**
  - **Turn the steering wheel from lock to lock while the engine is running.**
  - **Drive the vehicle on a straight road for more than 5 minutes.**
- **When the steering wheel is turned with the ignition switch in the ACC position, the predicted course lines may be displayed incorrectly.**

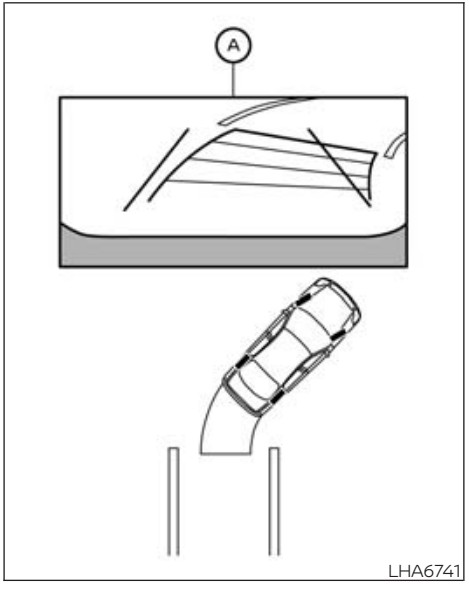

LHA6741

1. Visually check that the parking space is safe before parking your vehicle.
2. The rear view of the vehicle is displayed on the screen Ⓐ when the shift position is in R (Reverse).

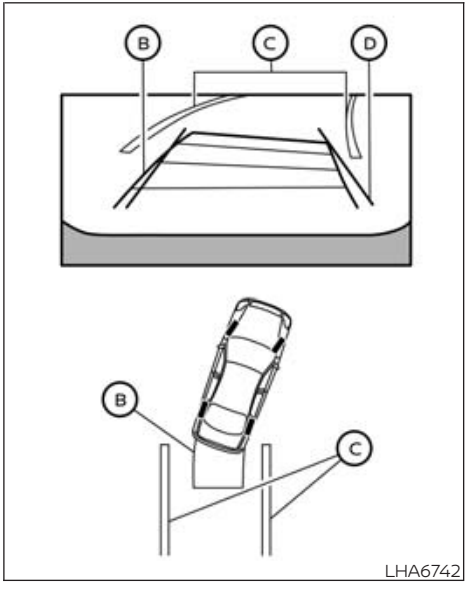

LHA6742

3. Slowly back up the vehicle adjusting the steering wheel so that the predicted course lines Ⓑ enter the parking space Ⓒ.

4. Maneuver the steering wheel to make the vehicle width guide lines Ⓓ parallel to the parking space Ⓒ while referring to the predicted course lines.
5. When the vehicle is parked in the space completely, move the shift position to P (Park) and apply the parking brake.

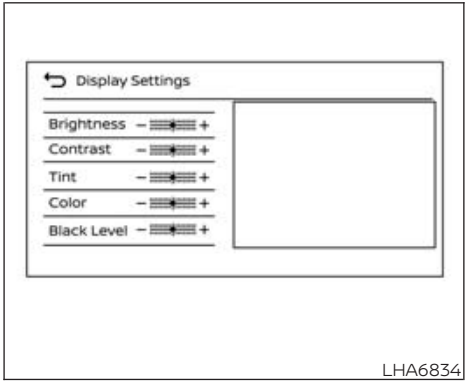

ADJUSTING THE SCREEN

To adjust the display settings while in the P (Park) position:

1. While on the main menu screen, touch the "Settings" key.
2. Touch the "Camera" key.
3. Touch the "Display Settings" key.
4. Adjust the item by touching the "+" or "–" key on the touch-screen display.

NOTE:

Do not adjust any of the display settings of the RearView Monitor while the vehicle is moving. Make sure the parking brake is firmly applied.

HOW TO TURN ON AND OFF PREDICTED COURSE LINES

To toggle on and off the predicted course lines while in the P (Park) position:

1. While on the main menu screen, touch the "Settings" key.
2. Touch the "Camera" key.
3. Touch the "Predicted Course Lines" key to toggle on and off

To toggle on and off the predicted course lines while in the R (Reverse) position, press the CAMERA button.

REARVIEW MONITOR SYSTEM LIMITATIONS

⚠ WARNING

Listed below are the system limitations for RearView Monitor. Failure to operate the vehicle in accordance with these system limitations could result in serious injury or death.

- **The system cannot completely eliminate blind spots and may not show every object.**
- **Underneath the bumper and the corner areas of the bumper cannot be viewed on the RearView Monitor because of its monitoring range limitation. The system will not show small objects below the bumper, and may not show objects close to the bumper or on the ground.**
- **Objects viewed in the RearView Monitor differ from actual distance because a wide-angle lens is used.**
- **Objects in the RearView Monitor will appear visually opposite compared to when viewed in the rearview and outside mirrors.**
- **Use the displayed lines as a reference. The lines are highly affected by the number of occupants, fuel level, vehicle position, road conditions and road grade.**
- **Make sure that the liftgate is securely closed when backing up.**
- **Do not put anything on the rearview camera. The rearview camera is installed above the license plate.**
- **When washing the vehicle with high pressure water, be sure not to spray it around the camera. Otherwise, water may enter the camera unit causing water condensation on the lens, a malfunction, fire or an electric shock.**
- **Do not strike the camera. It is a precision instrument. Otherwise, it may malfunction or cause damage resulting in a fire or an electric shock.**

The following are operating limitations and do not represent a system malfunction:

- When the temperature is extremely high or low, the screen may not clearly display objects.
- When strong light directly shines on the camera, objects may not be displayed clearly.
- Vertical lines may be seen in objects on the screen. This is due to strong reflected light from the bumper.
- The screen may flicker under fluorescent light.
- The colors of objects on the RearView Monitor may differ somewhat from the actual color of objects.
- Objects on the monitor may not be clear in a dark environment.
- There may be a delay when switching between views.
- If dirt, rain or snow accumulate on the camera, the RearView Monitor may not display objects clearly. Clean the camera.
- Do not use wax on the camera lens. Wipe off any wax with a clean cloth dampened with a diluted mild cleaning agent, then wipe with a dry cloth.

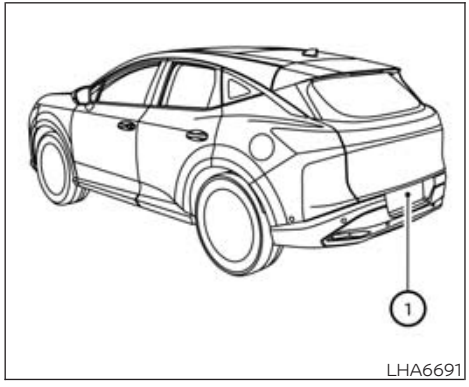

If dirt, rain or snow accumulates on the camera ①, the RearView Monitor may not display objects clearly. Clean the camera by wiping it with a cloth dampened with a diluted mild cleaning agent and then wiping it with a dry cloth.

SYSTEM MAINTENANCE

⚠ CAUTION

- **Do not use alcohol, benzine or thinner to clean the camera. This will cause discoloration.**
- **Do not damage the camera as the monitor screen may be adversely affected.**

INTELLIGENT Around View® MONITOR (if so equipped)

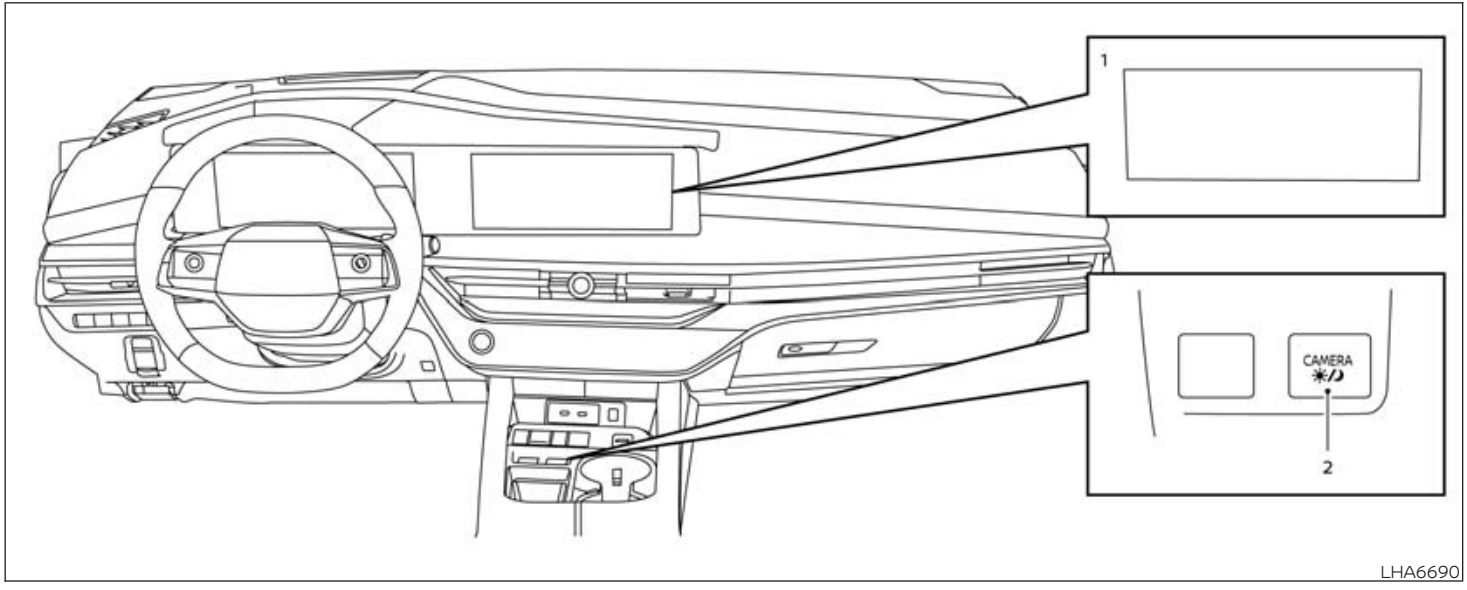

BASIC INFORMATION

1. Display screen
2. CAMERA button

⚠WARNING

- **Failure to follow the warnings and instructions for the proper use of the Intelligent Around View® Monitor system could result in serious injury or death.**
- **The Intelligent Around View® Monitor is a convenience feature and is not a substitute for proper vehicle operation because it has areas where objects cannot be viewed. The four corners of the vehicle in particular, are**

areas where objects do not always appear in the bird's-eye, front, or rear views. Always check your surroundings to be sure that it is safe to move before operating the vehicle. Always operate the vehicle slowly.

- **The driver is always responsible for safety during parking and other maneuvers.**

⚠CAUTION

Do not scratch the camera lens when cleaning dirt or snow from the front of the camera.

The Intelligent Around View® Monitor system is designed as an aid to the driver in situations such as slot parking or parallel parking.

The monitor displays various views of the position of the vehicle in a split screen format. Not all views are available at all times.

Available views:

- Front view

  An approximately 150–degree view of the front of the vehicle.
- Rear view

  An approximately 150–degree view of the rear of the vehicle.
- Bird's-eye view

  The surrounding views of the vehicle from above.
- Front-side view

  The view around and ahead of the front passenger's side wheel.
- Front-wide view

  A wider area view of the front view.
- Rear-wide view

  A wider area view of the rear view.
- Invisible hood view

  A view of the front of the vehicle with the transparent engine hood.
- 3D view

  A 360-degree view around the vehicle.

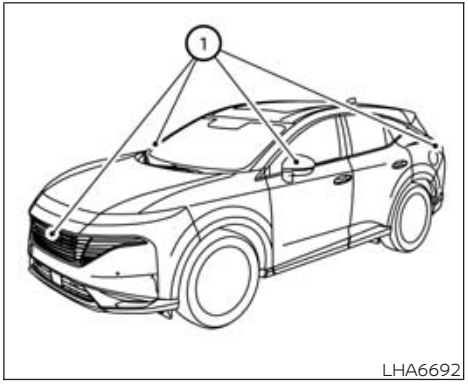

LHA6692

To display the multiple views, the Intelligent Around View® Monitor system uses cameras located in the front grille, on the vehicle's outside mirrors and one just above the vehicle's license plate ①.

INTELLIGENT Around View® MONITOR SYSTEM OPERATION

Basic Information

With the ignition switch in the ON position, press the shift button to the R (Reverse) position or press the CAMERA button to operate the Intelligent Around View® Monitor.

When the camera is first activated with the bird's-eye view in the display, a red icon will flash on the screen. This indicates that the sonar system is activated. For additional information on the front and rear sonar system, see "Front and rear sonar system" (P. 439).

The screen displayed on the Intelligent Around View® Monitor will automatically return to the previous screen 3 minutes after the CAMERA button has been pressed with the shift position in a position other than R (Reverse).

Available views

Basic Information

⚠ WARNING

- **The distance guide lines and the vehicle width lines should be used as a reference only when the vehicle is on a paved, level surface. The apparent distance viewed on the monitor may be different than the actual distance between the vehicle and displayed objects.**
- **Use the displayed lines and the bird's-eye view as a reference. The lines and the bird's-eye view are greatly affected by the number of occupants, cargo, fuel level, vehicle position, road condition and road grade.**
- **If the tires are replaced with different sized tires, the predicted course lines and the bird's-eye view may be displayed incorrectly.**
- **When driving the vehicle up a hill, objects viewed in the monitor are further than they appear. When driving the vehicle down a hill, objects viewed in the monitor are closer than they appear.**
- **Objects in the rear view will appear visually opposite compared to when viewed in the monitor and outside mirrors.**
- **Use the mirrors or actually look to properly judge distances to other objects.**
- **On a snow-covered or slippery road, there may be a difference between the predicted course lines and the actual course line.**
- **The vehicle width and predicted course lines are wider than the actual width and course.**
- **The displayed lines will appear slightly off to the right, because the rearview camera is not installed in the rear center of the vehicle.**

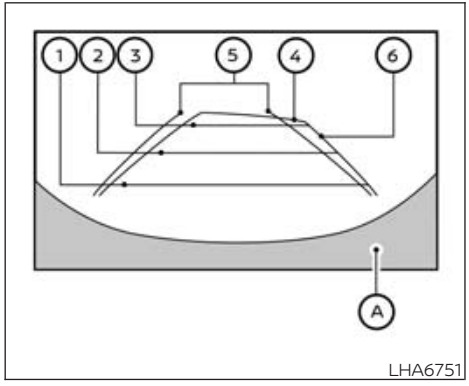

Front view

Front and rear view

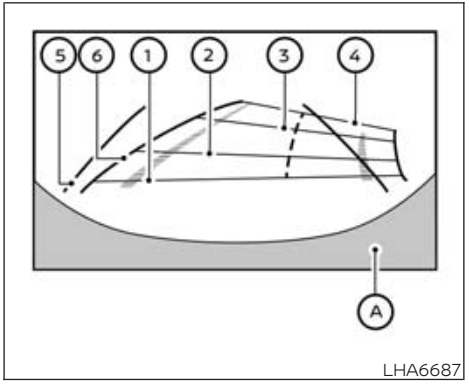

Rear view

Guiding lines that indicate the approximate vehicle width and distance to objects with reference to the vehicle body line Ⓐ are displayed on the monitor.

Distance guide lines:

Indicate distances from the vehicle body:

- Red line ①: approximately 1.5 ft (0.5 m)
- Blue line ②: approximately 3 ft (1 m)
- Blue line ③: approximately 7 ft (2 m)
- Blue line ④: approximately 10 ft (3 m) (if so equipped)

Vehicle width guide lines ⑤:

Indicate the approximate vehicle width when backing up.

Predicted course lines ⑥:

Indicate the predicted course when operating the vehicle. The predicted course lines will be displayed on the monitor when the steering wheel is turned. The predicted course lines will move depending on how much the steering wheel is turned.

The front view will not be displayed when the vehicle speed is above 12 mph (20 km/h).

NOTE:

When the monitor displays the front view and the steering wheel turns about 90 degrees or less from the straight-ahead position, both the right and left predicted course lines ⑥ are displayed. When the steering wheel turns about 90 degrees or more, a line is displayed only on the opposite side of the turn.

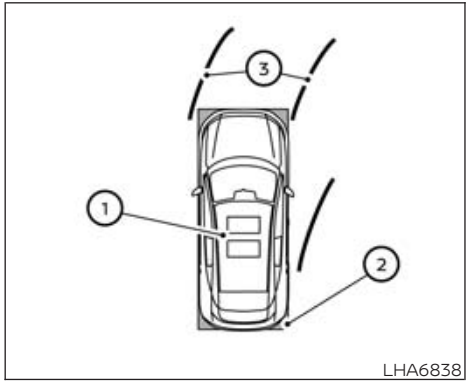

Front view

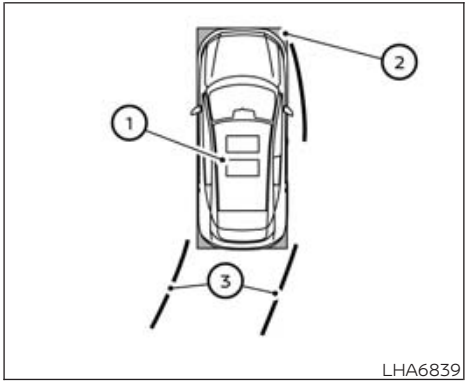

Rear view

Bird's-eye view

The bird's-eye view shows the overhead view of the vehicle, which helps confirm the vehicle position and the predicted course to a parking space.

The vehicle icon ① shows the position of the vehicle. Note that the apparent distance between objects viewed in the bird's-eye view may differ somewhat from the actual distance to the vehicle.

The areas that the cameras cannot cover ② are indicated in black.

The non-viewable area ② is highlighted in yellow for several seconds after the bird's-eye view is displayed. It will be shown only the first time after the ignition switch is placed in the ON position.

The driver can check the approximate direction and angle of the vehicle on the display when driving the vehicle forward or backward.

Predicted course lines ③ indicate the predicted course when operating the vehicle. The predicted course lines will be displayed on the monitor when the steering wheel is turned. The predicted course lines will move depending on how much the steering wheel is turned and will not be displayed while the steering wheel is in the neutral position.

When the monitor displays the front view and the steering wheel turns about 90 degrees or less from the neutral position, the two green predicted course lines are shown in front of the vehicle.

When the steering wheel turns about 90 degrees or more, one green predicted course line is shown in front of the vehicle and the other predicted course line is shown at the side of the vehicle.

When the monitor displays the rear view, the predicted course lines are shown at the back of the vehicle.

⚠ WARNING

- **Objects in the bird's-eye view will appear further than the actual distance.**
- **Tall objects, such as a curb or vehicle, may be misaligned or not displayed at the seam of the views.**
- **Objects that are above the camera cannot be displayed.**
- **The view of the bird's-eye view may be misaligned when the camera position alters.**
- **A line on the ground may be misaligned and is not seen as being straight at the seam of the views. The misalignment will increase as the line proceeds away from the vehicle.**
- **Tire angle display does not indicate the actual tire angle.**

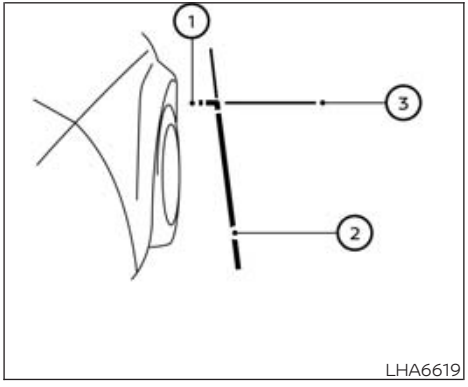

Front passenger's side

Front-side view

Guiding lines

Guiding lines that indicate the approximate width and the front end of the vehicle are displayed on the monitor.

The front-of-vehicle line ① shows the front part of the vehicle.

The side-of-vehicle line ② shows the approximate vehicle width including the outside mirrors.

The extensions ③ of both the front ① and side ② lines are shown with a blue line.

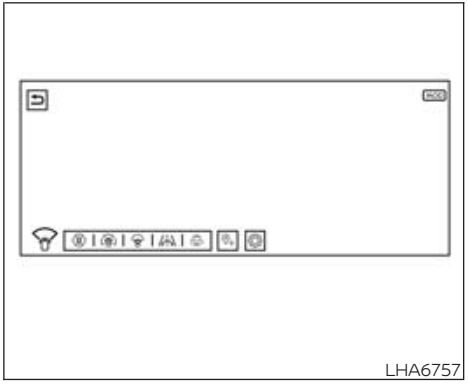

Front-wide view

Front-wide and rear-wide view

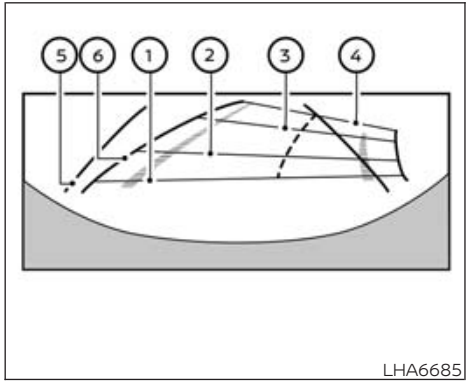

Rear-wide view

The front-wide and rear-wide views show a wider area on the entire screen and allows the checking of the blind corners on right and left sides. The rear-wide view displays an approximately 180-degree area while the front-view and rear-view display an approximately 150-degree area.

Distance guide lines

Indicates distances from the vehicle body:

- Red line ①: approximately 1.5 ft (0.5 m)
- Blue line ②: approximately 3 ft (1 m)
- Blue line ③: approximately 7 ft (2 m)
- Blue line ④: approximately 10 ft (3 m) (if so equipped)

Vehicle width guide lines ⑤

Indicate the vehicle width when backing up.

Predicted course lines ⑥:

Indicate the predicted course when operating the vehicle. The predicted course lines will be displayed on the monitor when the steering wheel is turned. The predicted course lines will move depending on how much the steering wheel is turned.

The front-wide view will not be displayed when the vehicle speed is above 12 mph (20 km/h).

NOTE:

- **When the monitor displays the rear-wide view and the steering wheel turns about 90 degrees or less from the straight-ahead position, both the right and left predicted course lines ⑥ are displayed. When the steering wheel turns about 90 degrees or more, a line is displayed only on the opposite side of the turn.**
- **Guide lines and predicted course lines do not display in the front-wide view.**

Saved Locations (if so equipped):

You can save the points where the front-wide view will automatically pop up. This can be useful when the driver needs to check the blind corners at intersections with poor visibility, for example.

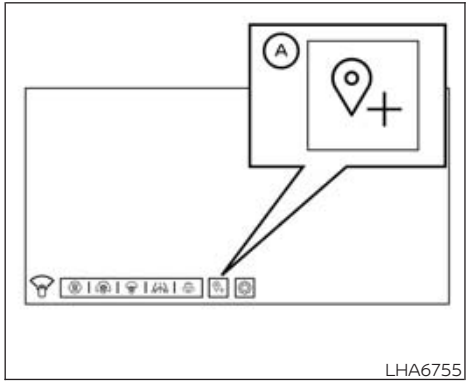

How to save the location

When the front-wide view is displayed, touch the "Ⓐ" key.

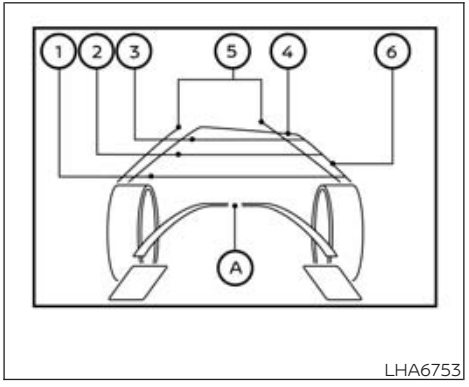

Invisible hood view

The invisible hood view allows you to see the road surface underneath the virtually transparent vehicle body Ⓐ. This may be useful for aligning the front wheels at a car wash or help to avoid hitting the side of curbs when driving at low speeds.

NOTE:

The image of the road surface under the body is a composite from the front camera images, and does not actually show the road surface under the vehicle body.

Distance guide lines

Indicates distances from the vehicle body:

- Red line ①: approximately 1.5 ft (0.5 m)
- Blue line ②: approximately 3 ft (1 m)
- Blue line ③: approximately 7 ft (2 m)
- Blue line ④: approximately 10 ft (3 m) (if so equipped)

Vehicle width guide lines ⑤

Indicate the vehicle width.

Predicted course lines ⑥:

Indicate the predicted course when operating the vehicle. The predicted course lines will move depending on how much the steering wheel is turned.

The invisible hood view is not available while in the R (Reverse) shift position.

The invisible hood view will not be displayed when the vehicle speed is above 12 mph (20 km/h).

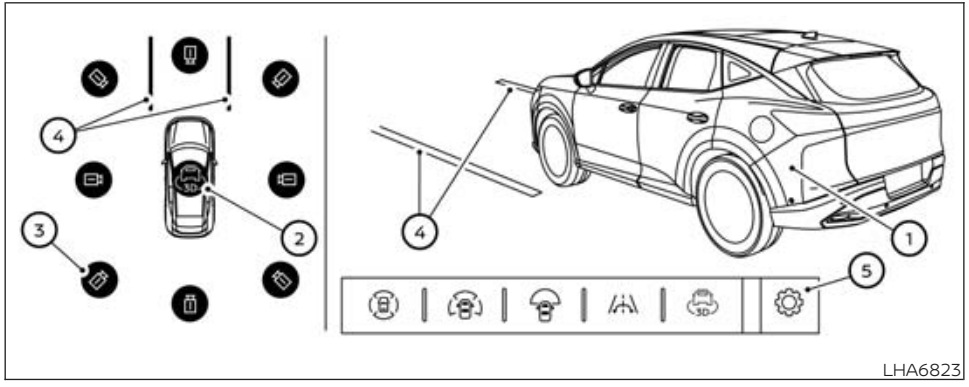

3D view

The 3D view shows the 360-degree view around the vehicle which helps confirm the vehicle position and the predictive course to a parking space.

When touching the rotation icon ②, the vehicle image ① and the surrounding area image will pop up and turn 360° to check the vehicle surroundings.

The vehicle image can also be rotated by swiping the vehicle image itself (if so equipped).

8 different camera directions can be selected by touching the camera position icon ③.

When the vehicle speed exceeds 10 mph (16 km/h), the three cameras that are shooting in the direction of travel can only be selected.

The predicted course lines ④ indicate the predicted course when operating the vehicle.

⚠ WARNING

The distance between objects viewed in the 3D view differs from the actual distance.

There are some areas where the system will not show objects. See "Intelligent Around View® Monitor system limitations" (P. 246) for more details.

Automatic 360° Moving:

When you press the CAMERA button for the first time after the ignition switch has been placed in the ON position, the vehicle image and the surrounding area image will pop up and turn 360° automatically (Auto 360° Moving) to check the vehicle surroundings.

How to ON/OFF the Auto 360° Moving feature

When the camera screen is displayed, touch " ⚙ " ⑤ to open the "Settings" menu, then select "Automatic 360° Moving" and enable or disable this feature.

DIFFERENCE BETWEEN PREDICTED AND ACTUAL DISTANCES

Basic Information

The displayed guidelines and their locations on the ground are for approximate reference only. Objects on uphill or downhill surfaces or projecting objects will be actually located at distances different from those displayed in the monitor relative to the guidelines (refer to illustrations). When in doubt, turn around and view the objects as you are backing up, or park and exit the vehicle to view the positioning of objects behind the vehicle.

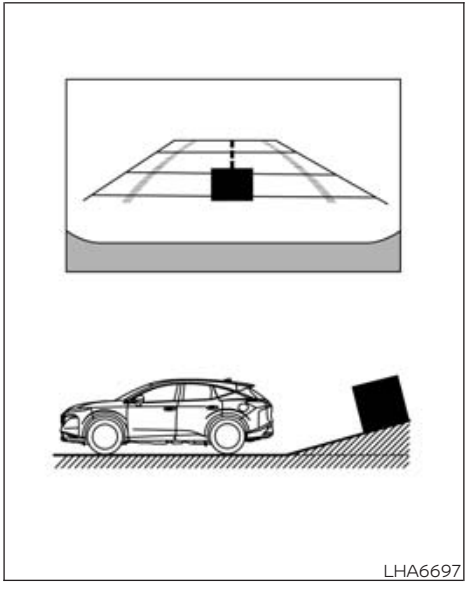

Backing up on a steep uphill

When backing up the vehicle up a hill, the distance guide lines and the vehicle width guide lines are shown closer than the actual distance. Note that any object on the hill is further than it appears on the monitor.

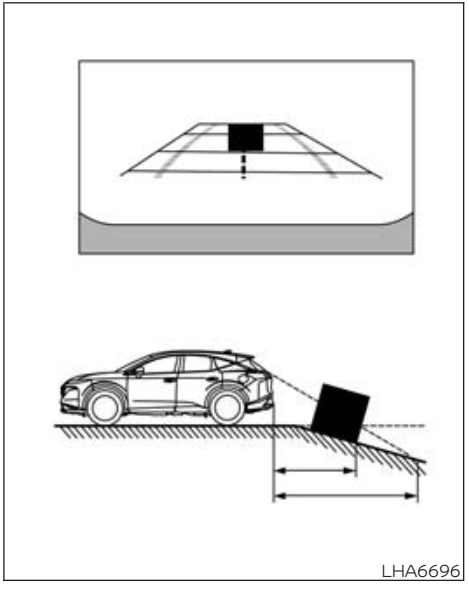

Backing up on a steep downhill

When backing up the vehicle down a hill, the distance guide lines and the vehicle width guide lines are shown farther than the actual distance. Note that any object on the hill is closer than it appears on the monitor.

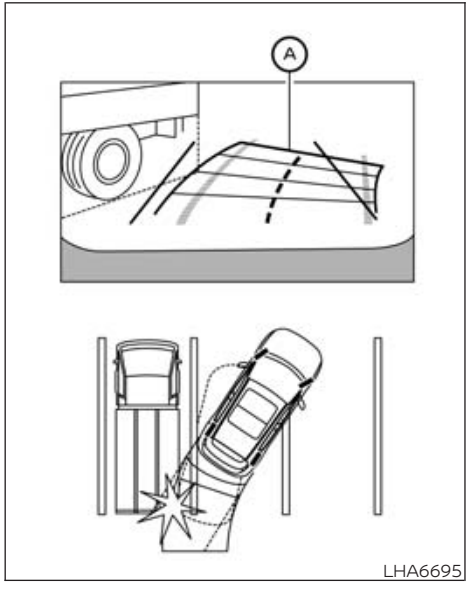

Backing up near a projecting object

The predicted course lines Ⓐ do not touch the object in the display. However, the vehicle may hit the object if it projects over the actual backing up course.

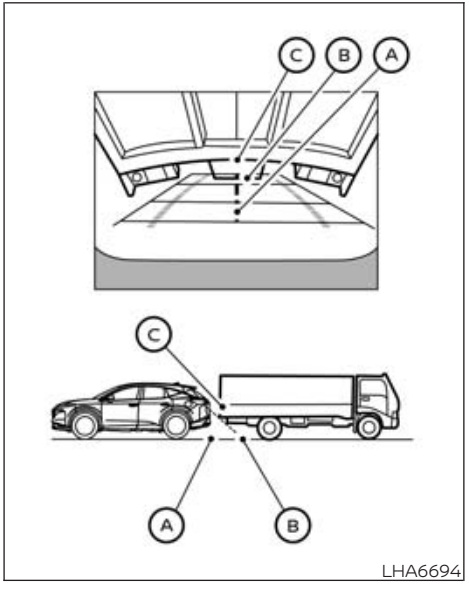

Backing up behind a projecting object

The position Ⓒ is shown farther than the position Ⓑ in the display. However, the position Ⓒ is actually at the same distance as the position Ⓐ. The vehicle may hit the object when backing up to the position Ⓐ if the object projects over the actual backing up course.

HOW TO PARK WITH PREDICTED COURSE LINES

⚠ WARNING

- **If the tires are replaced with different sized tires, the predicted course lines may be displayed incorrectly.**
- **On a snow-covered or slippery road, there may be a difference between the predicted course line and the actual course line.**
- **If the battery is disconnected or becomes discharged, the predicted course lines may be displayed incorrectly. If this occurs, please perform the following procedures:**
  - **Turn the steering wheel from lock to lock while the engine is running.**
  - **Drive the vehicle on a straight road for more than 5 minutes.**
- **When the steering wheel is turned with the ignition switch in the ACC position, the predicted course lines may be displayed incorrectly.**

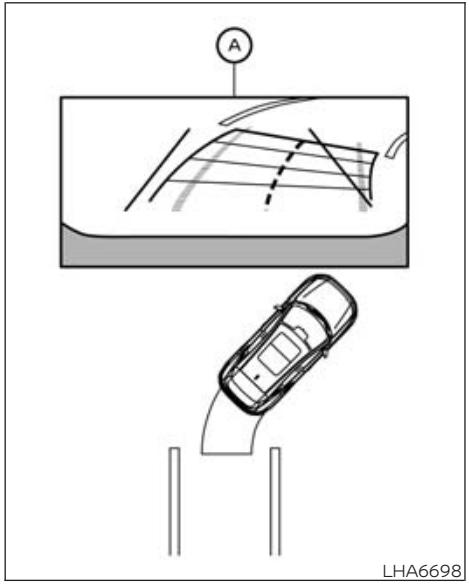

1. Visually check that the parking space is safe before parking your vehicle.
2. The rear view of the vehicle is displayed on the screen Ⓐ when the shift position is moved to R (Reverse).

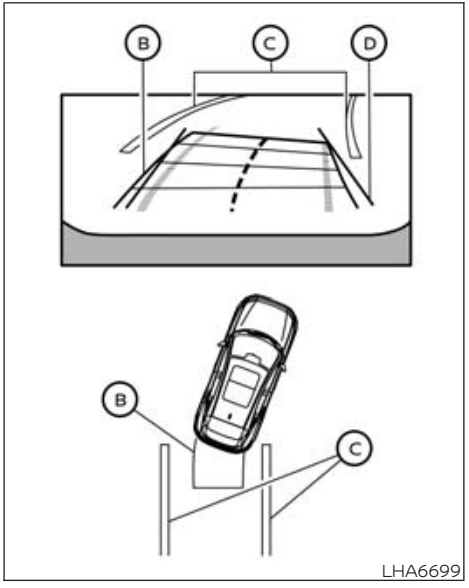

3. Slowly back up the vehicle adjusting the steering wheel so that the predicted course lines Ⓑ enter the parking space Ⓒ.
4. Maneuver the steering wheel to make the vehicle width guide lines Ⓓ parallel to the parking space Ⓒ while referring to the predicted course lines.
5. When the vehicle is parked in the space completely, move the shift position to P (Park) and apply the parking brake.

HOW TO SWITCH THE DISPLAY

With the vehicle ON, press the CAMERA button or press the shift button to the R (Reverse) position to operate the Intelligent Around View® Monitor.

The Intelligent Around View® Monitor displays different split screen views depending on the shift position. Press the CAMERA button to switch between the available views.

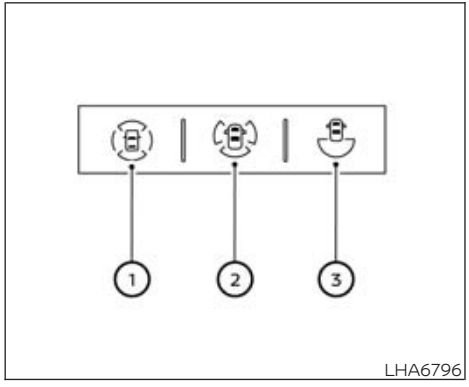

R (Reverse) position

If the shift position is in the R (Reverse) position, the available views are:

① Rear view/bird's-eye view

② Rear view/front side view

③ Rear-wide view

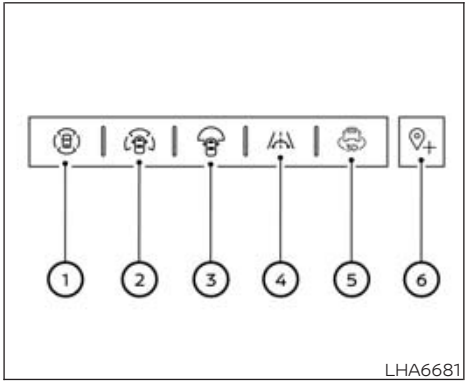

P (Park) or D (Drive) position

If the shift position is in the P (Park) or D (Drive) position, the available views are:

① Front view/bird's-eye view

② Front view/front-side view*

③ Front-wide view*

④ Invisible hood view

⑤ 3D view (3D view is not available in the R (Reverse) position)

Must touch "3D" key icon to display 3D view.

⑥ Saved Location (for front-wide view pop-up)

Available only in park position.

*: The shape changes when the shift position is in R (Reverse).

The display will switch from the Intelligent Around View® Monitor screen when:

- The shift position is in the D (Drive) position and the vehicle speed increases above approximately 12 mph (20 km/h)
- A different screen is selected.
- 3 minutes have passed without doing any operation.

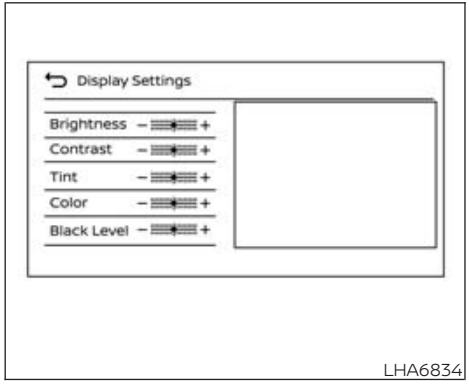

ADJUSTING THE SCREEN

1. While on the main menu screen, touch the Settings " ⚙ " key.
2. Touch the "Vehicle" key.
3. Touch the "Camera" key.
4. Touch the "Display Settings" key.
5. Adjust the item by touching the "+" or "-" key on the touch-screen display.

NOTE:

Do not adjust any of the display settings of the Intelligent Around View® Monitor while the vehicle is moving. Make sure the parking brake is firmly applied.

SETTING THE VEHICLE COLOR

The color of the vehicle shown on the bird's eye view and the 3D view can be changed. To change the color, perform the following operation.

1. Press the CAMERA button.
2. Select a view while the transmission is not in the R (Reverse) position.
3. Touch " ⚙ " key on the touch-screen display.
4. Touch the "Vehicle Color" key.
5. Touch the desired color.

CAMERA WIDGETS

The camera-related widgets can be set on the home menu screen of the touch-screen display. See the separate NissanConnect® Owner's manual (if so equipped) for more details about customizing the home menu screen.

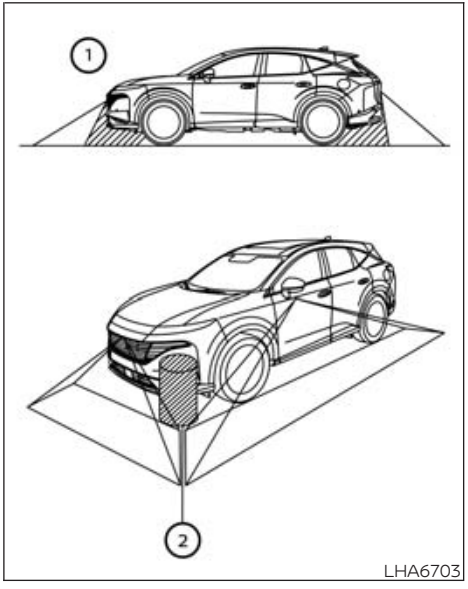

INTELLIGENT Around View® MONITOR SYSTEM LIMITATIONS

Basic Information

⚠WARNING

Listed below are the system limitations for Intelligent Around View® Monitor. Failure to operate the vehicle in accordance with these system limitations could result in serious injury or death.

- **Do not use the Intelligent Around View® Monitor with the outside mirrors in the stored position, and make sure that the liftgate is securely closed when operating the vehicle using the Intelligent Around View® Monitor.**
- **The apparent distance between objects viewed on the Intelligent Around View® Monitor differs from the actual distance.**
- **The cameras are installed on the front grille, the outside mirrors and above the rear license plate. Do not put anything on the vehicle that covers the cameras.**
- **When washing the vehicle with high pressure water, be sure not to spray it around the cameras. Otherwise, water may enter the camera unit causing water condensation on the lens, a malfunction, fire or an electric shock.**
- **Do not strike the cameras. They are precision instruments. Doing so could cause a malfunction or cause damage resulting in a fire or an electric shock.**

There are some areas where the system will not show objects and the system does not warn of moving objects. When in the front or rear view display, an object below the bumper or on the ground may not be viewed ①. When in the bird's-eye view, a tall object near the seam ② of the camera viewing areas will not appear in the monitor.

The following are operating limitations and do not represent a system malfunction:

- There may be a delay when switching between views.
- When the temperature is extremely high or low, the screen may not display objects clearly.
- When strong light directly shines on the camera, objects may not be displayed clearly.
- The screen may flicker under fluorescent light.
- The colors of objects on the Intelligent Around View® Monitor may differ somewhat from the actual color of objects.
- Objects on the Intelligent Around View® Monitor may not be clear and the color of the object may differ in a dark environment.
- There may be differences in sharpness between each camera view of the bird's-eye view.
- Do not use wax on the camera lens. Wipe off any wax with a clean cloth that has been dampened with a diluted mild cleaning agent, then wipe with a dry cloth.

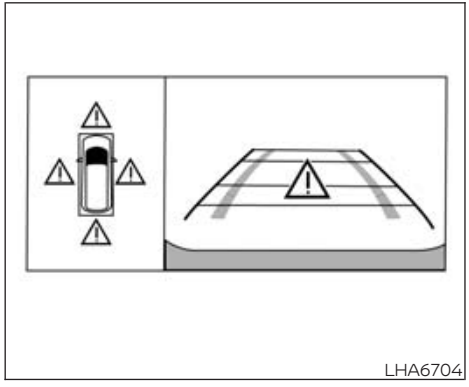
LHA6704

System temporarily unavailable

When the "!" icon is displayed on the screen, there are abnormal conditions in the Intelligent Around View® Monitor. This will not hinder normal driving operation but the system should be inspected. It is recommended that you visit a NISSAN dealer for this service.

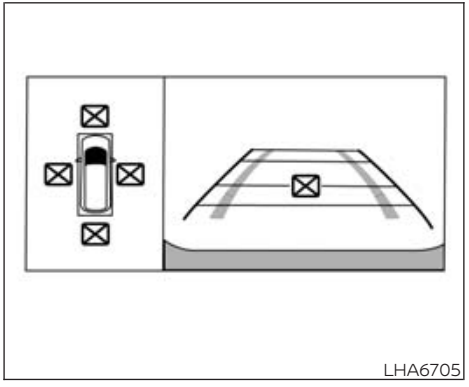
LHA6705

When the "[X]" icon is displayed on the screen, the camera image may be receiving temporary electronic disturbances from surrounding devices. This will not hinder normal driving operation but the system should be inspected if it occurs frequently. It is recommended that you visit a NISSAN dealer for this service.

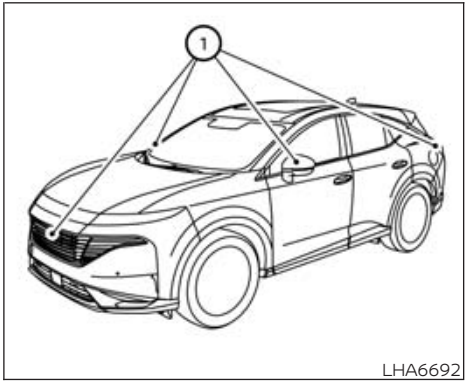

LHA6692

SYSTEM MAINTENANCE

⚠ CAUTION

- **Do not use alcohol, benzine or thinner to clean the camera. This will cause discoloration.**
- **Do not damage the cameras as the monitor screen may be adversely affected.**

If dirt, rain or snow accumulates on any of the cameras ①, the Intelligent Around View® Monitor may not display objects clearly. Clean the camera by wiping with a cloth dampened with a diluted mild cleaning agent and then wiping with a dry cloth.

MOVING OBJECT DETECTION (MOD) (if so equipped)

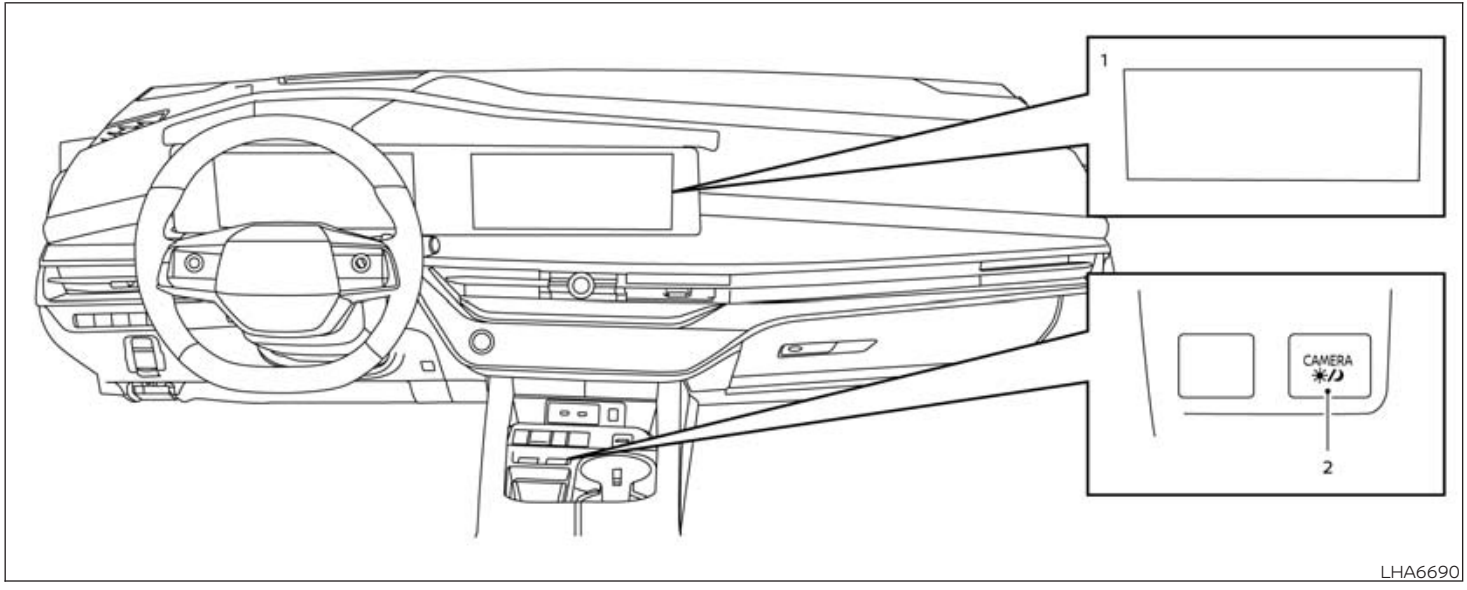

BASIC INFORMATION

1. Display screen
2. CAMERA button

⚠WARNING

- **Failure to follow the warnings and instructions for proper use of the Moving Object Detection (MOD) system could result in serious injury or death.**
- **The MOD system is not a substitute for proper vehicle operation and is not designed to prevent contact with objects surrounding the vehicle. When maneuvering, always use the outside mirrors and rearview mirror**

and turn and check the surroundings to ensure it is safe to maneuver.

- **The system is deactivated at speeds above 5 mph (8 km/h). It is reactivated at lower speeds.**
- **The MOD system is not designed to detect surrounding stationary objects.**

The MOD system can inform the driver of moving objects near the vehicle when backing out of garages, maneuvering in parking lots and in other such instances.

The MOD system detects moving objects by using image processing technology on the image shown in the display.

MOD SYSTEM OPERATION

The MOD system will turn on automatically under the following conditions:

- When the shift position is in R (Reverse).
- When vehicle speed decreases below approximately 5 mph (8 km/h) and the camera screen is displayed.

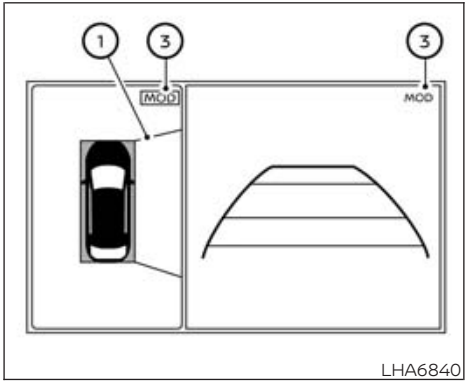

Front and bird's-eye view

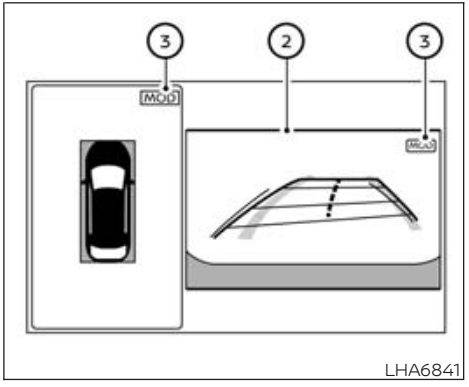

Rear and bird's-eye view

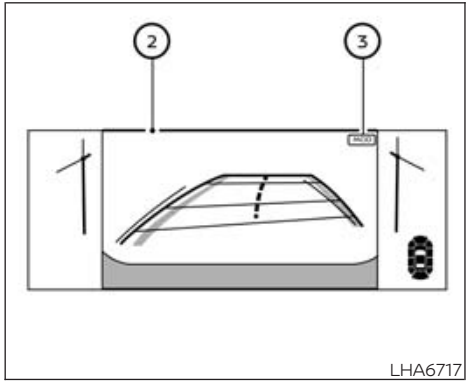

Rear and front-side view

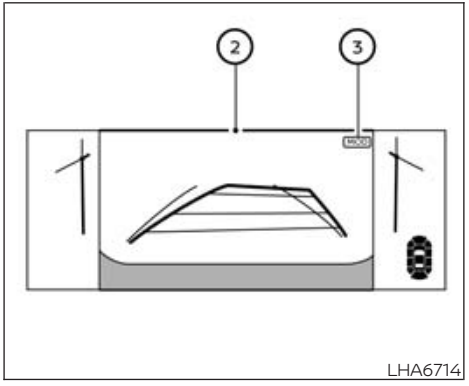

Front and front-side view

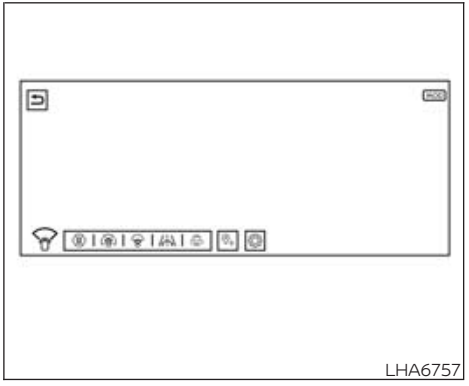

Front-wide view

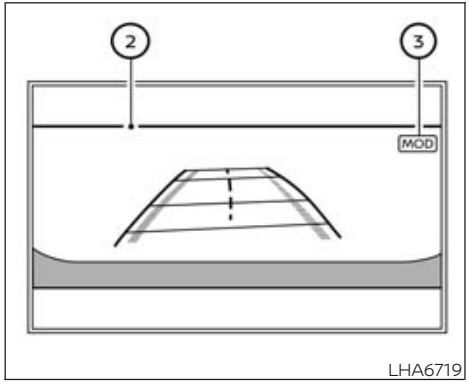

Rear-wide view

The MOD system operates in the following conditions when the camera view is displayed:

- When the shift position is in P (Park) or N (Neutral) and the vehicle is stopped, the MOD system detects moving objects in the bird's-eye view. The MOD system will not operate if either front door is opened. If outside mirrors are folded, MOD may not operate properly.
- When the shift position is in D (Drive) and the vehicle speed is below approximately 5 mph (8 km/h), the MOD system detects moving objects in the front view.
- When the shift position is in R (Reverse) and the vehicle speed is below approximately 5 mph (8 km/h), the MOD system detects moving objects in the rear view. The MOD system will not operate if the liftgate is open.

The MOD system does not detect moving objects in the front-side view. The MOD icon is not displayed on the screen when in this view.

When the MOD system detects moving objects near the vehicle, a chime will be heard and a frame will be illuminated on the view where the objects are detected. While the MOD system continues to detect moving objects, the frame continues to be displayed.

NOTE:

While the Rear Cross Traffic Alert chime (if so equipped) is beeping, the MOD system does not chime

In the bird's-eye view, the frame ① is displayed on each camera image (front, rear, right, left) depending on where moving objects are detected.

The frame ② is displayed on each view in the front view and rear view modes.

A green MOD icon ③ is displayed in the view where the MOD system is operative. A gray MOD icon is displayed in the view where the MOD system is not operative.

If the MOD system is turned off, the MOD icon ③ is not displayed.

TURNING MOD ON AND OFF

To turn the MOD system on or off:

1. Using ◀ ▶ buttons on the steering wheel, select "Settings".
2. Using the scroll dial or ▼ ▲ buttons on the steering wheel, select "Driver Assistance" and press the OK button.
3. Select "Parking Assist" and press the OK button.
4. Select "Moving Object" to toggle ON or OFF using the OK button.

MOD SYSTEM LIMITATIONS

⚠ WARNING

Listed below are the system limitations for MOD. Failure to operate the vehicle in accordance with these system limitations could result in serious injury or death.

- **Do not use the MOD system when towing a trailer. The system may not function properly.**
- **Excessive noise (for example, audio system volume or open vehicle window) will interfere with the chime sound, and it may not be heard.**
- **The MOD system performance will be limited according to environmental conditions and surrounding objects such as:**
  - **When there is low contrast between background and the moving objects.**
  - **When there is a blinking source of light.**
  - **When strong light such as another vehicle's headlight or sunlight is present.**
  - **When camera orientation is not in its usual position, such as when a mirror is folded.**
  - **When there is dirt, water drops or snow on the camera lens.**
  - **When the position of the moving objects in the display is not changed.**
- **The MOD system might detect flowing water droplets on the camera lens, white smoke from the muffler, moving shadows, etc.**
- **The MOD system may not function properly depending on the speed, direction, distance or shape of the moving objects.**
- **If your vehicle sustains damage to the parts where the camera is installed, leaving it misaligned or bent, the sensing zone may be altered and the MOD system may not detect objects properly.**
- **When the temperature is extremely high or low, the screen may not display objects clearly. This is not a malfunction.**

NOTE:

The green MOD icon will change to orange if one of the following has occurred:

- **When the system is malfunctioning.**
- **When the component temperature reaches a high level (icon will blink).**
- **When the rearview camera has detected a blockage (icon will blink).**

If the icon light continues to illuminate orange, have the MOD system checked. It is recommended that you visit a NISSAN dealer for this service.

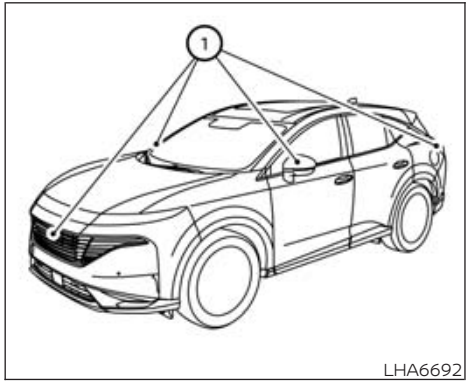

SYSTEM MAINTENANCE

⚠CAUTION

- **Do not use alcohol, benzine or thinner to clean the camera. This will cause discoloration.**
- **Do not damage the camera as the monitor screen may be adversely affected.**

If dirt, rain or snow accumulates on any of the cameras ①, the MOD system may not operate properly. Clean the camera by wiping with a cloth dampened with a diluted mild cleaning agent and then wiping with a dry cloth.

VENTS

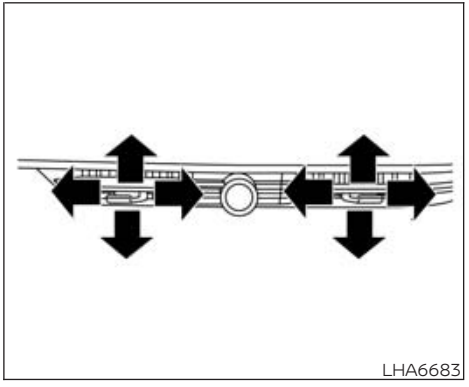

Center

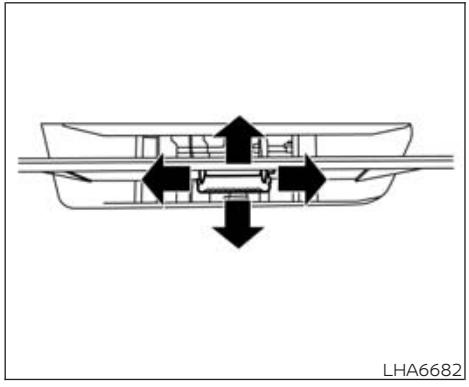

Side

Adjust air flow direction by moving the vent slides as illustrated until the desired position is achieved.

Close the ventilators by moving the slides completely in one of the directions as illustrated.

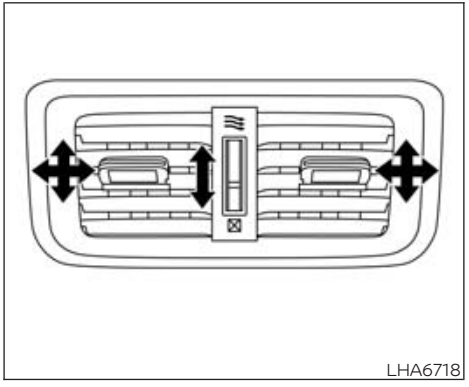

Rear

Adjust air flow direction by moving the vent slides as illustrated.

Open or close the vents by using the dial. Move the dial toward the ≋ to open the vents or toward the ⊠ to close them.

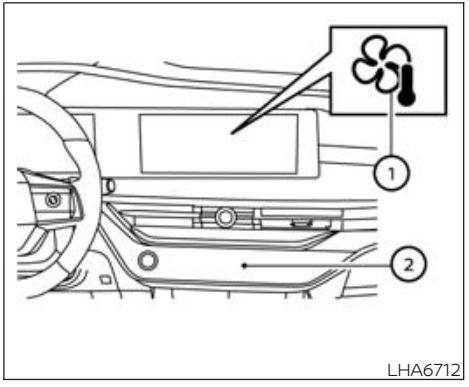

BASIC INFORMATION

Heater and air conditioner can be controlled by using either the control panel buttons ②, or keys on the climate control screen.

To display the climate control screen, touch the " " climate controls key ① on the display screen.

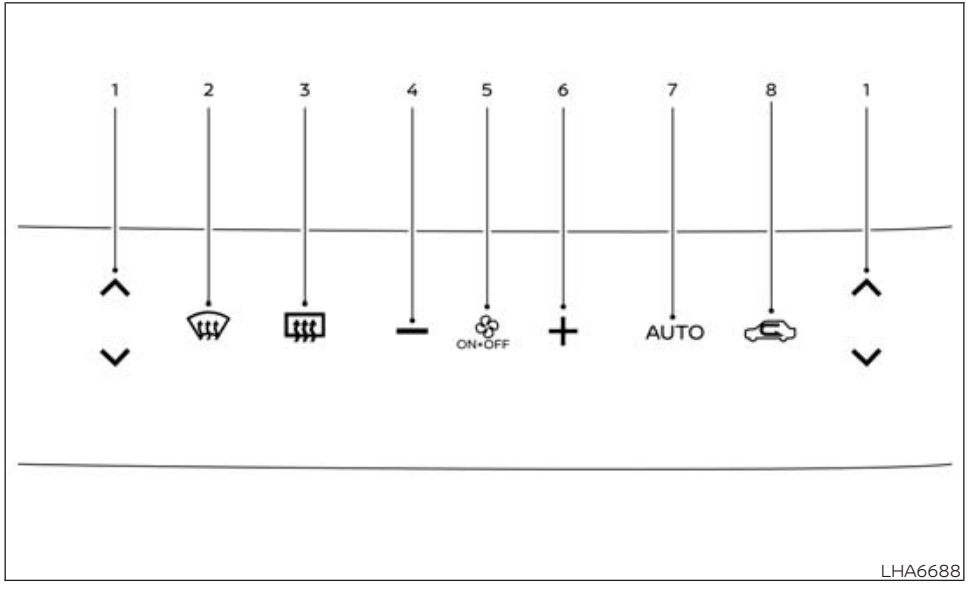

Heater and air conditioner control panel

1. ∧ , ∨ Temperature control
2. Front defroster
3. Rear window and outside mirror defroster

   See "Rear window and outside mirror defroster switch" (P. 135).
4. − Fan speed control decrease
5. ON·OFF
6. + Fan speed control increase
7. AUTO
8. Air intake control

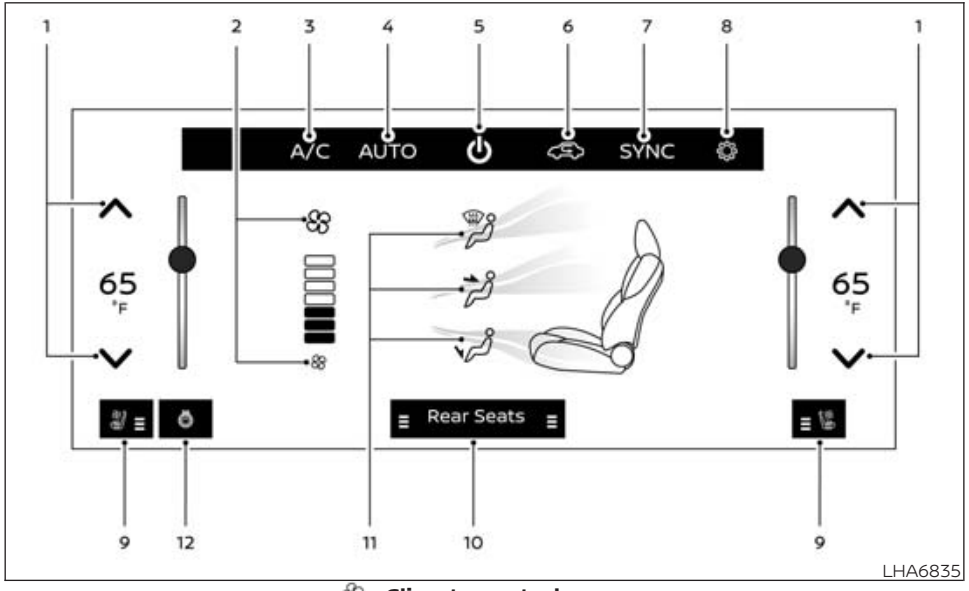

Climate control screen

1. ∧ , ∨ Temperature control
2. Fan speed control
3. A/C (air conditioner)
4. AUTO (automatic)
5. ON-OFF
6. Air intake control
7. SYNC (synchronize)
8. Settings
9. Front climate controlled seats (if so equipped)

   See "Climate controlled seat switches" (P. 143)
10. Rear heated seat switches (if so equipped)

    See "Rear heated seat switches (if so equipped)" (P. 145)
11. Air flow control
12. Heated steering wheel (if so equipped)

    See "Heated steering wheel switch" (P. 146).

WARNING

- **The air conditioner cooling function operates only when the engine is running.**
- **Do not leave children or adults who would normally require the assistance of others alone in your vehicle. Pets should also not be left alone. They could accidentally injure themselves or others through inadvertent operation of the vehicle. Also, on hot,**

sunny days, temperatures in a closed vehicle could quickly become high enough to cause severe or possibly fatal injuries to people or animals.

- **Do not use the recirculation mode for long periods as it may cause the interior air to become stale and the windows to fog up.**

NOTE:

- **Odors from inside and outside the vehicle can build up in the air conditioner unit. Odor can enter the passenger compartment through the vents.**
- **The heater and air conditioner system will automatically switch to fresh air. This should help to reduce odors that might build up in the air conditioner unit.**

AUTOMATIC OPERATION

Cooling and/or dehumidified heating (AUTO)

This mode may be used all year round as the system automatically works to keep a constant temperature. Air flow distribution, fan speed are also controlled automatically.

1. Use the AUTO button switch on the control panel or "AUTO" key on the display screen to turn on the heater and air conditioner in automatic mode. (The indicator will illuminate).
2. Adjust the temperature by using ∧, ∨ or sliding bar on the corresponding side.

- You can individually set temperatures for the driver's side and front passenger's side. To set both temperatures at the same time, touch the "SYNC" key. (The color of the key will turn orange.) The "SYNC" indicator will turn off if the passenger temperature is changed to something different than the driver temperature.

NOTE:

- **A visible mist may be seen coming from the ventilators in hot, humid conditions as the air is cooled rapidly. This does not indicate a malfunction.**
- **To save power, use the automatic mode or the ventilation mode. While the AUTO button and key turning orange, electric power consumption of the air conditioner system can have a better efficiency compared to the amount consumed with the AUTO button and key turning white. While ventilation mode is activated, outside air is drawn into the cabin using the fans with no heating or cooling applied. This significantly reduces energy consumption.**

Heating (A/C OFF)

The air conditioner does not activate in this mode. Use this mode when you only need to heat.

1. Use AUTO to turn on the heater and air conditioner in automatic mode. (The indicator will illuminate).
2. Touch the "A/C" key. (The color of the key will turn white.)
3. Adjust the temperature by using ∧, ∨ or sliding bar on the corresponding side.

- You can individually set temperatures for the driver's side and front passenger's side when the color of the "SYNC" key is white.
- The temperature of the passenger compartment will be maintained automatically. Air flow distribution and fan speed are also controlled automatically.

NOTE:

It is not recommended to use this mode if windows fog up.

Dehumidified defrosting or defogging

1. Press the Front defroster button on the heater and air conditioner control panel. (The color of the button will turn orange.)
2. Use the ∧ , ∨ Temperature control to set the desired temperature on the corresponding side.

- To quickly remove ice from the outside of the windows, set the fan speed to maximum.
- As soon as possible after the windshield is clean, use AUTO to return to the automatic mode.
- When the front defrost mode is activated, the air conditioner will automatically be turned on at outside temperatures more than slightly above freezing. The air recirculation mode automatically turns off, allowing outside air to be drawn into the passenger compartment to further improve the defogging performance.

Remote Engine Start with Intelligent Climate Control

Vehicles equipped with automatic climate controls and Remote Engine Start function may go into automatic heating or cooling mode when Remote Engine Start is activated depending on outside and cabin temperatures. During this period, the climate control display and buttons will be operable. In Remote Engine Start defrosting mode, the rear window defroster, heated seats (if so equipped), climate controlled seats (if so equipped), and heated steering wheel (if so equipped) may be activated automatically.

MANUAL OPERATION

Fan speed control

Use the fan speed control buttons or keys to manually control the fan speed.

Temperature control

Use the ∧ , ∨ or sliding bar on the corresponding side of the climate control screen to set the desired temperature.

Air recirculation

The air intake control mode will change each time the air intake control button or key is pushed or touched.

- When the air recirculates inside the vehicle, the color of the air intake control button and key are orange.
- When the air flow is drawn from outside the vehicle, the color of the air intake control button and key are white.
- When the " AUTO " key is displayed in the climate control screen, the air intake will be controlled automatically.
- When the power switch is placed in the ON position, the air conditioning system may change to air recirculation mode automatically to increase cooling efficiency.

Air flow control

Touching the air flow control key manually controls air flow and selects the air outlet:

— Air flows mainly from center and side vents.

— Air flows mainly from foot outlets.

— Air flows mainly from defroster.

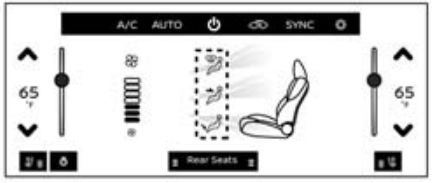

LHA6837

Climate control screen

On the climate control screen, the status of air flow for each position can be checked.

You can turn on and off air flow individually by touching the desired position. The amount of wind can change by swiping the display.

Defrost button will send air to windshield. For full defrost mode press the Front defroster button or select "A/C" key to ON, fan speed 5–7, temperature HI and set intake to fresh using the display screen inputs.

If all modes are turned ON, the mode will go to the default mode as calculated AUTO mode.

When adjusting the temperature, the color of display showing the amount of wind will change. These colors do not indicate the temperature of wind but the set temperature.

Synchronize temperature settings

Touch the "SYNC" key to turn on the SYNC mode. (The color of the key will turn orange.)

When the SYNC mode is active, the driver's side temperature control button or key will control the driver's and front passenger's side temperatures. To exit the SYNC mode, change the passenger's side temperature on the front passenger's side. (The color of the "SYNC" key will turn white.)

To turn system off

Push the ON·OFF button on the control panel or touch the " " key on the climate control screen. The color of the button and key will turn white.

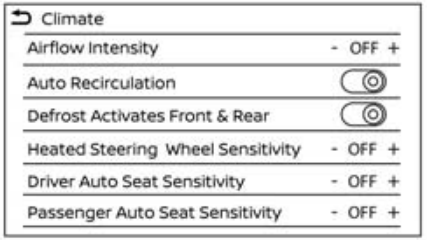

LHA6836

HEATER AND AIR CONDITIONER SETTINGS

Basic Information

Heater and air conditioner settings can be changed on the Climate control screen.

Touch the " " Settings key while on the climate control screen.

Available setting items may vary depending on models and specifications.

Available settings (if so equipped):

- **Airflow Intensity**

  This setting can be used in automatic control mode. Touch the "+" or "–" keys to set the desired air flow intensity from 1 (low) to 3 (high)..

- **Auto Recirculation**

  If this setting is ON when the AUTO button is selected, the recirculation status will change to Auto intake. If this setting is OFF, the recirculation setting will match the user setting if the AUTO button is pressed (does not change to Auto).

- **Defrost Activates Front & Rear**

  While this feature is turned on, pressing the Front defroster button on the control panel will also automatically turn on the Rear window defroster.

- **Heated Steering Wheel Sensitivity**

  In automatic control mode the temperature control sensitivity level of the heated steering wheel can be changed from 1 (low) to 3 (high). See "Heated steering wheel switch (if so equipped)" (P. 146).

  When using the automatic air conditioner, the function will not be activated while the setting is "OFF".

- **Driver Auto Seat Sensitivity**

  In automatic control mode the temperature control sensitivity level of the driver's side climate controlled seat (if so equipped) or heated seat (if so equipped) can be changed from 1 (low) to 3 (high). See "Climate controlled seat switches (if so equipped)" (P. 143) and "Heated seat switches (if so equipped)" (P. 144).

  When using the automatic air conditioner, the function will not be activated while the setting is "OFF".

- **Passenger Auto Seat Sensitivity**

  In automatic control mode the temperature control sensitivity level of the driver's side climate controlled seat (if so equipped) or heated seat (if so equipped) can be changed from 1 (low) to 3 (high). See "Climate controlled seat switches (if so equipped)" (P. 143) and "Heated seat switches (if so equipped)" (P. 144).

  When using the automatic air conditioner, the function will not be activated while the setting is "OFF".

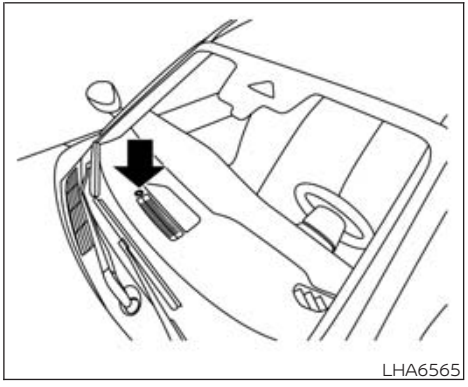

OPERATING TIPS

The sunload sensor, located on the instrument panel, as shown, helps the system maintain a constant temperature. Do not put anything on or around this sensor.

- When the engine coolant temperature and outside air temperature are low, the air flow from the foot outlets may not operate for a maximum of 150 seconds. However, this is not a malfunction. After the coolant temperature warms up, air flow from the foot outlets will operate normally.

- If you feel that the air flow mode you have selected and the outlets the air is coming out do not match, select the mode.
- When you change the air flow mode, you may feel air flow from the foot outlets for just a moment. This is not a malfunction.

SERVICING AIR CONDITIONER

The air conditioner system in your NISSAN vehicle is charged with a refrigerant designed with the environment in mind.

This refrigerant does not harm the earth's ozone layer.

Special charging equipment and lubricant is required when servicing your NISSAN air conditioner. Using improper refrigerants or lubricants will cause severe damage to your air conditioner system. For additional information, see "Air conditioner system refrigerant and oil recommendations" (P. 562).

It is recommended that you visit a NISSAN dealer to service your "environmentally friendly" air conditioner system.

WARNING

The air conditioner system contains refrigerant under high pressure. To avoid personal injury, any air conditioner service should be done only by an experienced technician with proper equipment.

ANTENNA

ROOF MOUNTED ANTENNA

The antenna is located on the rear part of the vehicle roof.

CAUTION

- **A build up of ice on the antenna can affect radio performance. Remove the ice to restore radio reception.**
- **When removing snow from the roof, do not apply strong force to the antenna. That might break the antenna and dent the roof panel.**
- **When using a high pressure car wash, keep the high pressure nozzle away from the antenna. The seal may be deformed or damaged.**
- **The radio performance may be affected if cargo carried on the roof blocks the radio signal. If possible, do not put cargo near the antenna.**

GNSS ANTENNA (for ProPILOT Assist 2.1) (if so equipped)

Two antennas are located on the rear part of the vehicle roof. For additional information, see "Exterior rear" (P. 5).

⚠CAUTION

- **A build up of ice on the antenna can affect GNSS performance. Remove the ice to restore GNSS reception.**
- **When removing snow from the roof, do not apply strong force to the antenna. That may cause broken antenna and roof panel dent.**
- **When using a high pressure car wash, keep the high pressure nozzle away from the antenna.**
  The seal may be deformed or damaged.
- **The GNSS performance may be affected if cargo carried on the roof blocks the GNSS signal. If possible, do not put cargo near the antenna.**

When installing a CB, ham radio or car phone in your vehicle, be sure to observe the following precautions; otherwise, the new equipment may adversely affect the engine control system and other electronic parts.

⚠WARNING

- **A cellular phone should not be used for any purpose while driving so full attention may be given to vehicle operation. Some jurisdictions prohibit the use of cellular phones while driving.**
- **If you must make a call while your vehicle is in motion, the hands free cellular phone operational mode is highly recommended. Exercise extreme caution at all times so full attention may be given to vehicle operation.**
- **If you are unable to devote full attention to vehicle operation while talking on the phone, pull off the road to a safe location and stop your vehicle.**

⚠CAUTION

- **Keep the antenna as far away as possible from the electronic control modules.**
- **Keep the antenna wire more than 8 in (20 cm) away from the electronic control system harnesses. Do not route the antenna wire next to any harness.**
- **Adjust the antenna standing-wave ratio as recommended by the manufacturer.**
- **Connect the ground wire from the CB radio chassis to the body.**
- **For additional information, it is recommended that you visit a NISSAN dealer for servicing.**

iPod®/iPhone®

"Made for iPod", "Made for iPhone" and "Made for iPad" mean that an electronic accessory has been designed to connect specifically to iPod, iPhone or iPad, respectively, and has been certified by the developer to meet Apple performance standards. Apple is not responsible for the operation of this device or its compliance with safety and regulatory standards. Please note that the use of this accessory with iPod, iPhone or iPad may affect wireless performance.

iPad, iPhone, iPod classic, iPod nano, iPod shuffle and iPod touch are trademarks of Apple Inc., registered in the U.S. and other countries. Lightning is a trademark of Apple Inc.

5 Starting and driving

Precautions when starting and driving 270
Basic Information 270
Exhaust gas (carbon monoxide) 270
Three-way catalyst 270
Tire Pressure Monitoring System (TPMS) 271
On-pavement and off-road driving precautions 275
Avoiding collision and rollover 275
Off-road recovery 275
Rapid air pressure loss 276
Drinking alcohol/drugs and driving 276
Driving safety precautions 277
Push-button ignition switch 279
Basic Information 279
Operating range 279
Push-button ignition switch positions 280
Emergency engine shut off 281
Automatic engine shut-off (if so equipped) 281
NISSAN Intelligent Key® battery discharge 281
NISSAN Vehicle Immobilizer System 282
Before starting the engine 282
Starting the engine 283
Basic Information 283
Remote Engine Start 284
Driving the vehicle 284
Engine protection mode 284
Automatic Transmission (A/T) 285
Parking brake 292
Basic Information 292
Electronic parking brake (switch type) 292
Automatic brake hold 294
Basic information 294
How to activate/deactivate the automatic brake hold function 295
How to use the automatic brake hold function 296
Drive Mode Selector 297
Basic information 297
STANDARD MODE 298
SPORT mode 298
ECO mode 298
Traffic Sign Recognition (TSR) 301
Basic Information 301
System operation 301
Turning the Traffic Sign Recognition (TSR) system on and off 303

System temporarily unavailable 303
System malfunction 303
System maintenance 303
Lane Departure Warning (LDW) 304
Basic Information 304
LDW system operation 305
How to enable/disable the LDW system 306
LDW system limitations 307
System temporarily unavailable 308
System malfunction 308
System maintenance 308
Intelligent Lane Intervention (I-LI) 309
Basic Information 309
I-LI system operation 310
How to enable/disable the I-LI system 311
I-LI system limitations 312
System temporarily unavailable 313
System malfunction 314
System maintenance 315
Blind Spot Warning (BSW) 315
Basic Information 315
BSW system operation 317
How to enable/disable the BSW system 318
BSW system limitations 319
BSW driving situations 319
System temporarily unavailable 323
System maintenance 324
Intelligent Blind Spot Intervention (I-BSI) 325
Basic information 325
I-BSI system operation 326
How to enable/disable the I-BSI system 328
I-BSI system limitations 329
I-BSI driving situations 330
System temporarily unavailable 334
System malfunction 335
System maintenance 335
Rear Cross Traffic Alert (RCTA) 336
Basic Information 336
RCTA system operation 337
How to enable/disable the RCTA system 339
RCTA system limitations 340
System temporarily unavailable 342
System maintenance 343
ProPILOT Assist Systems 344
Overview 344
ProPILOT Assist systems overview 347
ProPILOT Assist mode indicators 347

ProPILOT Assist displays and indicators 358
Intelligent Cruise Control (ICC) 362
Conventional (fixed speed) cruise control mode 367
Speed Limit Assist - a feature of ProPILOT Assist with Navi-link (if so equipped) 370
Speed Adjust by Route - a feature of ProPILOT Assist with Navi-link (if so equipped) 376
Steering Assist 378
Hands on detection 380
Steering Assist with HD map data (a feature of ProPILOT Assist 2.1) 381
Driver monitor 383
Attention to the road 384
Lane Change Assist 385
Passing assist 388
System maintenance 390
License information (ProPILOT Assist 2.1) 390
Radio frequency statement 391
Rear Automatic Braking (RAB) 392
Basic Information 392
RAB system operation 393
How to temporarily cancel the RAB system 394
RAB system limitations 394
System temporarily unavailable 396
System malfunction 396
System maintenance 396
Automatic Emergency Braking (AEB) with Pedestrian Detection 397
Basic Information 397
AEB with Pedestrian Detection system operation 398
Turning the AEB with Pedestrian Detection system on/off 401
AEB with Pedestrian Detection system limitations 402
System temporarily unavailable 407
System malfunction 409
System maintenance 409
Intelligent Forward Collision Warning (I-FCW) 411
Basic Information 411
I-FCW system operation 412
Turning the I-FCW system on/off 414
I-FCW system limitations 415

System temporarily unavailable 419
System malfunction 420
System maintenance 421
Intelligent Driver Alertness (I-DA) 422
Basic Information 422
Intelligent Driver Alertness system operation 423
How to enable/disable the Intelligent Driver Alertness (I-DA) system 424
Intelligent Driver Alertness (I-DA) system limitations 425
Break-in schedule 426
Fuel efficient driving tips 426
Increasing fuel economy 427
All-Wheel Drive (AWD) (if so equipped) 427
Parking/parking on hills 430
Electric power steering 431
Brake system 432
Basic Information 432
Brake precautions 432
Anti-lock Braking System (ABS) 433
Brake Assist 434
Vehicle Dynamic Control (VDC) system 434
Basic Information 434
Rise-up and build-up 436
Brake force distribution 436
Active Brake Limited Slip (ABLS) system 437
Chassis control 438
Basic information 438
Intelligent Trace Control 438
Active Ride Control (if so equipped) 438
Hill start assist system 439
Front and rear sonar system 439
Basic Information 439
System operation 440
How to enable/disable the front and rear sonar system 442
Sonar limitations 443
System temporarily unavailable 444
System maintenance 444
Idling Stop System 445
Basic information 445
Retrograde movement control function 447
Idling Stop System display 447
Idling Stop OFF switch 451

Cold weather driving 452
Freeing a frozen door lock 452
Antifreeze 452
Battery 452
Draining of coolant water 452
Tire equipment 452
Special winter equipment 453
Driving on snow or ice 453
Engine block heater (if so equipped) 453
Active noise cancellation (if so equipped) 454
Active noise cancellation 454
Active sound enhancement 454

BASIC INFORMATION

⚠ WARNING

- **Do not leave children or adults who would normally require the assistance of others alone in your vehicle. Pets should also not be left alone. They could accidentally injure themselves or others through inadvertent operation of the vehicle. Also, on hot, sunny days, temperatures in a closed vehicle could quickly become high enough to cause severe or possibly fatal injuries to people or animals.**
- **Properly secure all cargo with ropes or straps to help prevent it from sliding or shifting. Do not place cargo higher than the seatbacks. In a sudden stop or collision, unsecured cargo could cause personal injury.**
- **Exceeding the roof rack capacity can change the vehicle's center of gravity and adversely affect the handling and stability of the vehicle resulting in an accident causing death or serious injury.**

EXHAUST GAS (carbon monoxide)

⚠ WARNING

- **Do not breathe exhaust gases; they contain colorless and odorless carbon monoxide. Carbon monoxide is dangerous. It can cause unconsciousness or death.**
- **If you suspect that exhaust fumes are entering the vehicle, drive with all windows fully open, and have the vehicle inspected immediately.**
- **Do not run the engine in closed spaces such as a garage.**
- **Do not park the vehicle with the engine running for any extended length of time.**
- **Keep the liftgate and rear vent windows closed while driving, otherwise exhaust gases could be drawn into the passenger compartment. If you must drive with the liftgate or rear vent windows open, follow these precautions:**
  1. **Open all the windows.**
  2. **Set the air recirculation button to off and the fan control dial to high to circulate the air.**
- **If electrical wiring or other cable connections must pass to a trailer through the seal on the liftgate or the body, follow the manufacturer's recommendation to prevent carbon monoxide entry into the vehicle.**
- **The exhaust system and body should be inspected by a qualified mechanic whenever:**
  a. **The vehicle is raised for service.**
  b. **You suspect that exhaust fumes are entering into the passenger compartment.**
  c. **You notice a change in the sound of the exhaust system.**
  d. **You have had an accident involving damage to the exhaust system, underbody, or rear of the vehicle.**

THREE-WAY CATALYST

The three-way catalyst is an emission control device installed in the exhaust system. Exhaust gases in the three-way catalyst are burned at high temperatures to help reduce pollutants.

⚠ WARNING

- **The exhaust gas and the exhaust system are very hot. Keep people, animals or flammable materials away from the exhaust system components.**
- **Do not stop or park the vehicle over flammable materials such as dry grass, waste paper or rags. They may ignite and cause a fire.**

⚠ CAUTION

- **Do not use leaded gasoline. Deposits from leaded gasoline will seriously reduce the three-way catalyst's ability to help reduce exhaust pollutants.**
- **Keep your engine tuned up. Malfunctions in the ignition, fuel injection, or electrical systems can cause overrich fuel flow into the three-way catalyst, causing it to overheat. Do not keep driving if the engine misfires, or if noticeable loss of performance or other unusual operating conditions are detected. Have the vehicle inspected promptly. It is recommended that you visit a NISSAN dealer for this service.**
- **Avoid driving with an extremely low fuel level. Running out of fuel could cause the engine to misfire, damaging the three-way catalyst.**
- **Do not race the engine while warming it up.**
- **Do not push or tow your vehicle to start the engine.**

TIRE PRESSURE MONITORING SYSTEM (TPMS)

Basic Information

Each tire, including the spare (if provided), should be checked monthly when cold and inflated to the inflation pressure recommended by the vehicle manufacturer on the vehicle placard or tire inflation pressure label. (If your vehicle has tires of a different size than the size indicated on the vehicle placard or tire inflation pressure label, you should determine the proper tire inflation pressure for those tires.)

As an added safety feature, your vehicle has been equipped with a Tire Pressure Monitoring System (TPMS) that illuminates a low tire pressure telltale when one or more of your tires is significantly underinflated. Accordingly, when the low tire pressure telltale illuminates, you should stop and check your tires as soon as possible, and inflate them to the proper pressure. Driving on a significantly underinflated tire causes the tire to overheat and can lead to tire failure. Under-inflation also reduces fuel efficiency and tire tread life, and may affect the vehicle's handling and stopping ability.

Please note that the TPMS is not a substitute for proper tire maintenance, and it is the driver's responsibility to maintain correct tire pressure, even if under-inflation has not reached the level to trigger illumination of the TPMS low tire pressure telltale.

Your vehicle has also been equipped with a TPMS malfunction indicator to indicate when the system is not operating properly. The TPMS malfunction indicator is combined with the low tire pressure telltale. When the system detects a malfunction, the telltale will flash for approximately one minute and then remain continuously illuminated. This sequence will continue upon subsequent vehicle start-ups as long as the malfunction exists. When the malfunction indicator is illuminated, the system may not be able to detect or signal low tire pressure as intended. TPMS malfunctions

may occur for a variety of reasons, including the installation of replacement or alternate tires or wheels on the vehicle that prevent the TPMS from functioning properly. Always check the TPMS malfunction telltale after replacing one or more tires or wheels on your vehicle to ensure that the replacement or alternate tires and wheels allow the TPMS to continue to function properly.

Additional information:

- When using a wheel without the TPMS such as the spare tire, the TPMS does not monitor the tire pressure of the spare tire.
- The TPMS will activate only when the vehicle is driven at speeds above 16 mph (25 km/h). Also, this system may not detect a sudden drop in tire pressure (for example, a flat tire while driving).
- The low tire pressure warning light does not automatically turn off when the tire pressure is adjusted. After the tire is inflated to the recommended pressure, the vehicle must be driven at speeds above 16 mph (25 km/h) to activate the TPMS and turn off the low tire pressure warning light. Use a tire pressure gauge to check the tire pressure.
- The "Tire Pressure Low — Add Air" warning appears in the vehicle information display when the low tire pressure warning light is illuminated and low tire pressure is detected. The "Tire Pressure Low — Add Air" warning turns off when the low tire pressure warning light turns off.
- The "Tire Pressure Low — Add Air" warning appears each time the ignition switch is placed in the ON position as long as the low tire pressure warning light remains illuminated.
- The "Tire Pressure Low — Add Air" warning does not appear if the low tire pressure warning light illuminates to indicate a TPMS malfunction.
- Tire pressure rises and falls depending on the heat caused by the vehicle's operation and the outside temperature. Do not reduce the tire pressure after driving because the tire pressure rises after driving. Low outside temperature can lower the temperature of the air inside the tire which can cause a lower tire inflation pressure. This may cause the low tire pressure warning light to illuminate. If the warning light illuminates, check the tire pressure for all four tires.
- The Tire and Loading Information label is located in the driver's door opening.
- You can also check the pressure of all tires (except the spare tire) on the vehicle information display screen. The order of the tire pressure figures displayed on the screen corresponds with the actual order of the tire position.

For additional information, see "Low tire pressure warning light" (P. 92) and "Tire Pressure Monitoring System (TPMS)" (P. 457).

⚠ WARNING

- **Radio waves could adversely affect electric medical equipment. Those who use a pacemaker should contact the electric medical equipment manufacturer for the possible influences before use.**
- **If the low tire pressure warning light illuminates while driving, avoid sudden steering maneuvers or abrupt braking, reduce vehicle speed, pull off the road to a safe location and stop the vehicle as soon as possible. Driving with under-inflated tires may permanently damage the tires and increase the likelihood of tire failure. Serious vehicle damage could occur and may lead to an accident and**

could result in serious personal injury. Check the tire pressure for all four tires. Adjust the tire pressure to the recommended COLD tire pressure shown on the Tire and Loading Information label to turn the low tire pressure warning light off. If you have a flat tire, repair it with an emergency tire puncture repair kit (if so equipped) as soon as possible or replace it with a spare tire (if so equipped) as soon as possible. (For additional information, see "Flat tire" (P. 457).)

- **When using a wheel without the TPMS such as the spare tire, when a spare tire is mounted or a wheel is replaced, tire pressure will not be indicated, the TPMS will not function and the low tire pressure warning light will flash for approximately 1 minute. The light will remain on after 1 minute. Have your tires replaced and/or TPMS system reset as soon as possible. It is recommended that you visit a NISSAN dealer for this service.**
- **Replacing tires with those not originally specified by NISSAN could affect the proper operation of the TPMS.**
- **Do not inject any tire liquid or aerosol tire sealant into the tires, as this may cause a malfunction of the tire pressure sensors.**
- **To help avoid serious personal injury or death, when checking your tire pressure, either as part of routine maintenance or because of a TPMS alert, please check the pressure in all of your tires. Driving on underinflated tires can cause tire failure and interfere with the proper operation of other vehicle systems.**

⚠ CAUTION

- **The TPMS may not function properly when the wheels are equipped with tire chains or the wheels are buried in snow.**
- **Do not place metalized film or any metal parts (antenna, etc.) on the windows. This may cause poor reception of the signals from the tire pressure sensors, and the TPMS will not function properly.**

Some devices and transmitters may temporarily interfere with the operation of the TPMS and cause the low tire pressure warning light to illuminate.

Some examples are:

- Facilities or electric devices using similar radio frequencies are near the vehicle.
- If a transmitter set to similar frequencies is being used in or near the vehicle.
- If a computer (or similar equipment) or a DC/AC converter is being used in or near the vehicle.

The low tire pressure warning light may illuminate in the following cases:

- If the vehicle is equipped with a wheel and tire without TPMS.
- If the TPMS has been replaced and the ID has not been registered.
- If the wheel is not originally specified by NISSAN.

FCC Notice:

For USA:

This device complies with Part 15 of the FCC Rules. Operation is subject to the following two conditions: (1) This device may not cause harmful interference, and (2) this device must accept any interference received, including interference that may cause undesired operation.

NOTE:

Changes or modifications not expressly approved by the party responsible for compliance could void the user's authority to operate the equipment.

For Canada:

This device contains licence-exempt transmitter(s)/receiver(s) that comply with Innovation, Science and Economic Development Canada's licence-exempt RSS(s). Operation is subject to the following two conditions: (1) This device may not cause interference. (2) This device must accept any interference, including interference that may cause undesired operation of the device.

TPMS with Easy-Fill Tire Alert

When adding air to an under-inflated tire, the TPMS with Easy-Fill Tire Alert provides visual and audible signals outside the vehicle to help you inflate the tires to the recommended COLD tire pressure.

Vehicle set-up

1. Park the vehicle in a safe and level place.
2. Apply the parking brake and place the shift position in the P (Park) position.
3. Place the ignition switch in the ON position. Do not start the engine.

Operation

1. Add air to the tire.
2. After a few seconds, the hazard indicators will start flashing.
3. When the designated pressure is reached, the horn beeps once and the hazard indicators stop flashing.
4. Perform the above steps for each tire.
   - If the tire is over-inflated more than approximately 4 psi (30 kPa), the horn beeps and the hazard indicators flash three times. To correct the pressure, push the core of the valve stem on the tire briefly to release pressure. When the pressure reaches the designated pressure, the horn beeps once.
   - If the hazard indicator does not flash within approximately 15 seconds after starting to inflate the tire, it indicates that the Easy-Fill Tire Alert is not operating.
   - The TPMS will not activate the Easy-Fill Tire Alert under the following conditions:
     - If there is interference from an external device or transmitter.
     - The air pressure from the inflation device is not sufficient to inflate the tire.
     - There is a malfunction in the TPMS.
     - There is a malfunction in the horn or hazard indicators.
     - The identification code of the tire pressure sensor is not registered to the system.
     - The battery of the tire pressure sensor is low.
   - If the Easy-Fill Tire Alert does not operate due to TPMS interference, move the vehicle about 3 ft (1 m) backward or forward and try again.

If the Easy-Fill Tire Alert is not working, use a tire pressure gauge.

ON-PAVEMENT AND OFF-ROAD DRIVING PRECAUTIONS

Utility vehicles have a significantly higher rollover rate than other types of vehicles.

They have higher ground clearance than passenger cars to make them capable of performing in a variety of on-pavement and off-road applications. This gives them a higher center of gravity than ordinary vehicles. An advantage of higher ground clearance is a better view of the road, allowing you to anticipate problems. However, they are not designed for cornering at the same speeds as conventional 2-Wheel Drive vehicles any more than low-slung sports cars are designed to perform satisfactorily under off-road conditions. If at all possible, avoid sharp turns at high speeds. As with other vehicles of this type, failure to operate this vehicle correctly may result in loss of control or vehicle rollover.

In a rollover crash, an unbelted person is significantly more likely to die than a person wearing a seat belt.

For additional information, see "Driving safety precautions" (P. 277).

AVOIDING COLLISION AND ROLLOVER

⚠WARNING

Failure to operate this vehicle in a safe and prudent manner may result in loss of control or an accident.

Be alert and drive defensively at all times. Obey all traffic regulations. Avoid excessive speed, high speed cornering, or sudden steering maneuvers, because these driving practices could cause you to lose control of your vehicle.

As with any vehicle, loss of control could result in a collision with other vehicles or objects or cause the vehicle to roll over, particularly if the loss of control causes the vehicle to slide sideways.

Be attentive at all times, and avoid driving when tired. Never drive when under the influence of alcohol or drugs (including prescription or over-the-counter drugs which may cause drowsiness). Always wear your seat belt as outlined in the "Safety – Seats, seat belts and supplemental restraint system" section of this manual, and also instruct your passengers to do so.

Seat belts help reduce the risk of injury in collisions and rollovers.

In a rollover crash, an unbelted person is significantly more likely to die than a person wearing a seat belt.

OFF-ROAD RECOVERY

While driving, the right side or left side wheels may unintentionally leave the road surface. If this occurs, maintain control of the vehicle by following the procedure below. Please note that this procedure is only a general guide. The vehicle must be driven as appropriate based on the conditions of the vehicle, road and traffic.

1. Remain calm and do not overreact.
2. Do not apply the brakes.
3. Maintain a firm grip on the steering wheel with both hands and try to hold a straight course.
4. When appropriate, slowly release the accelerator pedal to gradually slow the vehicle.
5. If there is nothing in the way, steer the vehicle to follow the road while vehicle speed is reduced. Do not attempt to drive the vehicle back onto the road surface until vehicle speed is reduced.

6. When it is safe to do so, gradually turn the steering wheel until both tires return to the road surface. When all tires are on the road surface, steer the vehicle to stay in the appropriate driving lane.
   - If you decide that it is not safe to return the vehicle to the road surface based on vehicle, road or traffic conditions, gradually slow the vehicle to a stop in a safe place off the road.

RAPID AIR PRESSURE LOSS

Rapid air pressure loss or a "blow-out" can occur if the tire is punctured or is damaged due to hitting a curb or pothole. Rapid air pressure loss can also be caused by driving on under-inflated tires.

Rapid air pressure loss can affect the handling and stability of the vehicle, especially at highway speeds.

Help prevent rapid air pressure loss by maintaining the correct air pressure and visually inspecting the tires for wear and damage. For additional information, see "Wheels and tires" (P. 511). If a tire rapidly loses air pressure or "blows-out" while driving, maintain control of the vehicle by following the procedure below. Please note that this procedure is only a general guide. The vehicle must be driven as appropriate based on the conditions of the vehicle, road and traffic.

⚠WARNING

If there is a sudden loss of tire air pressure, the vehicle will generally move or pull in the direction of the flat tire. In this situation, losing control of the vehicle may cause a collision and result in personal injury.
To help avoid loss of control:
- **Do not rapidly apply the brakes.**
- **Do not rapidly release the accelerator pedal.**
- **Do not rapidly turn the steering wheel.**

1. Remain calm and do not overreact.
2. Maintain a firm grip on the steering wheel with both hands and try to hold a straight course.
3. When appropriate, slowly release the accelerator pedal to gradually slow the vehicle.
4. Gradually steer the vehicle to a safe location off the road and away from traffic if possible.
5. Lightly apply the brake pedal to gradually stop the vehicle.
6. Turn on the hazard warning flashers and contact a roadside emergency service to change the tire. For additional information, see "Changing a flat tire (models with spare tire)" (P. 458).

DRINKING ALCOHOL/DRUGS AND DRIVING

⚠WARNING

Never drive under the influence of alcohol or drugs. Alcohol in the bloodstream reduces coordination, delays reaction time and impairs judgement. Driving after drinking alcohol increases the likelihood of being involved in an accident injuring yourself and others. Additionally, if you are injured in an accident, alcohol can increase the severity of the injury.

NISSAN is committed to safe driving. However, you must choose not to drive under the influence of alcohol. Every year thousands of people are injured or killed in alcohol-related collisions. Although the local laws vary on what is considered to be legally intoxicated, the fact is that alcohol

affects all people differently and most people underestimate the effects of alcohol.

Remember, drinking and driving don't mix! That is true for drugs (over-the-counter, prescription) and illegal drugs, too. Don't drive if your ability to operate your vehicle is impaired by alcohol, drugs, or some other physical condition.

DRIVING SAFETY PRECAUTIONS

Your NISSAN is designed for both normal and off-road use. However, avoid driving in deep water or mud as your NISSAN is mainly designed for leisure use, unlike a conventional off-road vehicle.

Remember that 2-Wheel Drive (2WD) models are less capable than All-Wheel Drive (AWD) models for rough road driving and extrication when stuck in deep snow or mud, or the like.

Please observe the following precautions:

⚠ WARNING

- **Spinning the front wheels on slippery surfaces may cause the AWD warning message to display and the AWD system to automatically switch from the AWD to the 2WD mode. This could reduce the traction. Be especially careful when towing a trailer (AWD models).**
- **Drive carefully when off the road and avoid dangerous areas. Every person who drives or rides in this vehicle should be seated with their seat belt fastened. This will keep you and your passengers in position when driving over rough terrain.**
- **Do not drive across steep slopes. Instead drive either straight up or straight down the slopes. Off-road vehicles can tip over sideways much more easily than they can forward or backward.**
- **Many hills are too steep for any vehicle. If you drive up them, you may stall. If you drive down them, you may not be able to control your speed. If you drive across them, you may roll over.**
- **Do not shift gears while driving on downhill grades as this could cause loss of control of the vehicle.**
- **Stay alert when driving to the top of a hill. At the top there could be a drop-off or other hazard that could cause an accident.**
- **If your engine stalls or you cannot make it to the top of a steep hill, never attempt to turn around. Your vehicle could tip or roll over. Always back straight down in R (Reverse) gear and apply brakes to control your speed.**
- **Heavy braking going down a hill could cause your brakes to overheat and fade, resulting in loss of control and an accident. Apply brakes lightly and use a low gear to control your speed.**
- **Unsecured cargo can be thrown around when driving over rough terrain. Properly secure all cargo so it will not be thrown forward and cause injury to you or your passengers.**
- **Exceeding the roof rack capacity can raise the center of gravity excessively and affect the handling and stability of the vehicle.**
- **Secure heavy loads in the cargo area as far forward and as low as possible. Do not equip the vehicle with tires larger than specified in this manual. This could cause your vehicle to roll over.**

- **Do not grip the inside or spokes of the steering wheel when driving off-road. The steering wheel could move suddenly and injure your hands. Instead drive with your fingers and thumbs on the outside of the rim.**
- **Before operating the vehicle, ensure that the driver and all passengers have their seat belts fastened.**
- **Always drive with the floor mats in place as the floor may become hot.**
- **Lower your speed when encountering strong crosswinds. With a higher center of gravity, your NISSAN is more affected by strong side winds. Slower speeds ensure better vehicle control.**
- **Do not drive beyond the performance capability of the tires, even with AWD engaged.**
- **For AWD equipped vehicles, do not attempt to raise two wheels off the ground and shift the transmission to any drive or reverse position with the engine running. Doing so may result in drivetrain damage or unexpected vehicle movement which could result in serious vehicle damage or personal injury.**
- **Do not attempt to test an AWD equipped vehicle on a 2-wheel dynamometer (such as the dynamometers used by some states for emissions testing) or similar equipment even if the other two wheels are raised off the ground. Make sure you inform test facility personnel that your vehicle is equipped with AWD before it is placed on a dynamometer. Using the wrong test equipment may result in drivetrain damage or unexpected vehicle movement which could result in serious vehicle damage or personal injury.**
- **When a wheel is off the ground due to an unlevel surface, do not spin the wheel excessively.**
- **Accelerating quickly, sharp steering maneuvers or sudden braking may cause loss of control.**
- **If at all possible, avoid sharp turning maneuvers, particularly at high speeds. Your NISSAN vehicle has a higher center of gravity than a passenger car. The vehicle is not designed for cornering at the same speeds as passenger cars.**
- **Failure to operate this vehicle correctly could result in loss of control and/or a rollover accident.**
- **Always use tires of the same type, size, brand, construction (bias, bias-belted, or radial), and tread pattern on all four wheels. Install tire chains on the front wheels when driving on slippery roads and drive carefully.**
- **Be sure to check the brakes immediately after driving in mud or water. For additional information, see "Brake precautions" (P. 432).**
- **Avoid parking your vehicle on steep hills. If you get out of the vehicle and it rolls forward, backward or sideways, you could be injured.**
- **Whenever you drive off-road through sand, mud or water as deep as the wheel hub, more frequent maintenance may be required. For additional information, see "Maintenance schedules" (P. 533).**

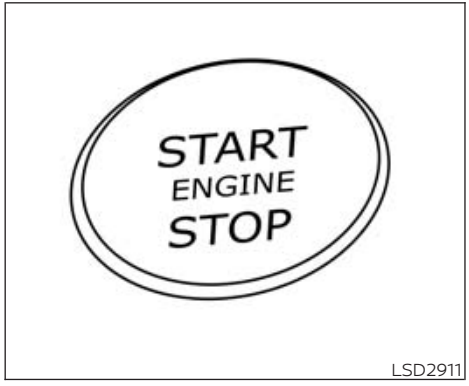

LSD2911

BASIC INFORMATION

⚠ WARNING

Do not operate the push-button ignition switch while driving the vehicle except in an emergency. (The engine will stop when the ignition switch is pushed three consecutive times in less than 1.5 seconds or the ignition switch is pushed and held for more than 2 seconds.) If the engine stops while the vehicle is being driven, this could lead to a crash and serious injury.

When the ignition switch is pushed without depressing the brake pedal, the ignition switch will illuminate.

Push the ignition switch center:

- Once to change to ON.
- Once to change to OFF.

The shift position can be moved from the P (Park) position if the ignition switch is in the ON position and the brake pedal is depressed.

If the battery of the vehicle is discharged, the ignition switch cannot be moved from the LOCK position.

Some indicators and warnings for operation are displayed on the vehicle information display. For additional information, see "Vehicle information display" (P. 97).

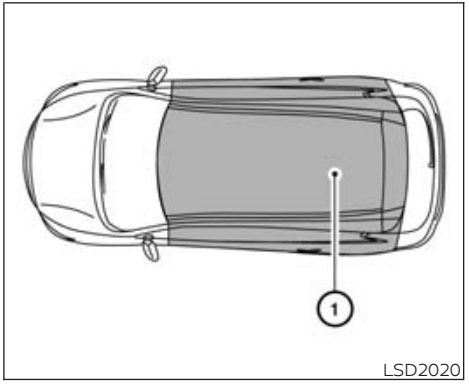

LSD2020

OPERATING RANGE

The Intelligent Key functions can only be used when the Intelligent Key is within the specified operating range.

When the Intelligent Key battery is almost discharged or strong radio waves are present near the operating location, the Intelligent Key system's operating range becomes narrower and may not function properly.

If the Intelligent Key is within the operating range, it is possible for anyone, even someone who does not carry the Intelligent Key, to push the ignition switch to start the engine.

The operating range of the engine start function is inside of the vehicle ①.

- The luggage area is not included in the operating range, but the Intelligent Key may function.
- If the Intelligent Key is placed on the instrument panel or inside the glove box, storage bin or door pocket, the Intelligent Key may not function.
- If the Intelligent Key is placed near the door or window outside the vehicle, the Intelligent Key may function.

PUSH-BUTTON IGNITION SWITCH POSITIONS

LOCK (Normal parking position)

The ignition switch can only be locked in this position.

The ignition switch will be unlocked when it is placed in the ON position while carrying the Intelligent Key.

The ignition switch will lock when any door is opened or closed with the ignition switched off.

ON (Normal operating position)

This position turns on the ignition system and electrical accessories.

ON has a battery saver feature that will place the ignition switch in the OFF position, if the vehicle is not running, after some time under the following conditions:

- All doors are closed.
- The shift position is in P (Park).
- The hazard lamps are off.
- The turn signals are off.

The battery saver feature will be canceled if any of the following occur:

- The shift position is moved out of the P (Park) position.
- The ignition switch changes position.
- The hazard lamps are turned on.
- The turn signals are turned on.

⚠ CAUTION

Do not leave the vehicle with the ignition switch in the ON position when the engine is not running for an extended period. This can discharge the battery.

OFF

The ignition switch is in the OFF position when the engine is turned off using the ignition switch. The ignition switch heart beat function (pulsed illumination) may activate for a period of time when any door is unlocked and when the door opened/closed status changes in the OFF position.

AUTO ACC

With the vehicle in the P (Park) position, the Intelligent Key with you and the ignition placed from ON to OFF, the radio can still be used for a period of time, or until the driver's door is opened.

After a period of time, functions such as radio, navigation (if so equipped), and Bluetooth® Hands-Free Phone System may be restarted by turning on the audio system (see separate NissanConnect® Owner's Manual).

Depending in the situation, the AUTO ACC function may not activate or the operation may be shorter than usual. In this case, the AUTO ACC function or functions related to the AUTO ACC may not activate.

EMERGENCY ENGINE SHUT OFF

To shut off the engine in an emergency situation while driving, perform the following procedure:

- Rapidly push the ignition switch three consecutive times in less than 1.5 seconds, or
- Push and hold the ignition switch for more than 2 seconds.

AUTOMATIC ENGINE SHUT-OFF (if so equipped)

This system shuts off the engine automatically after an extended period of time if it has been left running while the shift lever is in the P (Park) position. This helps avoid unintentional idling, which can waste fuel.

The last 30 seconds of engine run time will be indicated in the vehicle information display. At this time you can use the button on the steering wheel to select one of the following options:

- "OK" to clear the display and allow the system to shut off the engine. The engine will also shut off if nothing is selected.
- "Disable" to prevent the system from shutting off the engine for the remainder of this trip. The system cannot be cancelled permanently.

NOTE:

- **The timer that monitors idling will restart if the brake pedal or accelerator pedal is pressed, delaying the automatic engine shut-off activation.**
- **The system will automatically turn back on after the engine is restarted.**

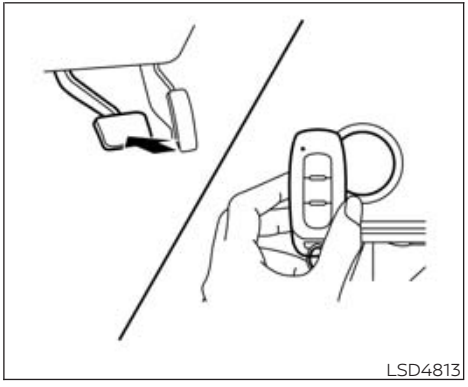

NISSAN INTELLIGENT KEY® BATTERY DISCHARGE

If the battery of the NISSAN Intelligent Key® is discharged, or environmental conditions interfere with the Intelligent Key operation, start the engine according to the following procedure:

1. Press the park button to shift to the P (Park) position.
2. Firmly apply the foot brake.
3. Touch the ignition switch with the Intelligent Key as illustrated. (A chime will sound.)

(After step 3 is performed, when the ignition switch is pushed without depressing the brake pedal, the ignition switch position will change to ON.)

4. Push the ignition switch while depressing the brake pedal within 10 seconds after the chime sounds. The engine will start.

NOTE:

- **When the ignition switch is pushed to the ON position or the engine is started by the above procedure, the Intelligent Key battery discharge indicator appears in the vehicle information display even when the Intelligent Key is inside the vehicle. This is not a malfunction. To turn off the Intelligent Key battery discharge indicator, touch the ignition switch with the Intelligent Key again.**
- **If the Intelligent Key battery discharge indicator appears, replace the battery as soon as possible. For additional information, see "Intelligent Key battery replacement" (P. 508).**

NISSAN VEHICLE IMMOBILIZER SYSTEM

The NISSAN Vehicle Immobilizer System will not allow the engine to start without the use of the registered key.

If the engine fails to start using a registered key (for example, when interference is caused by another registered key, an automated toll road device or automatic payment device on the key ring), restart the engine using the following procedure:

1. Leave the ignition switch in the ON position for approximately 5 seconds.
2. Place the ignition switch in the OFF or LOCK position, and wait approximately 10 seconds.
3. Repeat steps 1 and 2.
4. Restart the engine while holding the device (which may have caused the interference) separate from the registered key.

If the no start condition re-occurs, NISSAN recommends placing the registered key on a separate key ring to avoid interference from other devices.

- Make sure the area around the vehicle is clear.
- Check fluid levels such as engine oil, coolant, brake fluid, and windshield-washer fluid as frequently as possible, or at least whenever you refuel.
- Check that all windows and lights are clean.
- Visually inspect tires for their appearance and condition. Also check tires for proper inflation.
- Check that all doors are closed.
- Position seat and adjust head restraints/headrests.
- Adjust inside and outside mirrors.
- Fasten seat belts and ask all passengers to do likewise.
- Check the operation of warning lights when the ignition switch is placed in the ON position. For additional information, see "Warning lights, indicator lights and audible reminders" (P. 86).

BASIC INFORMATION

1. Apply the parking brake.
2. Place the shift position in the P (Park) or N (Neutral). P (Park) is recommended.
   The starter is designed not to operate unless the shift position is in either P (Park) or N (Neutral).
3. Push the ignition switch to the ON position. Depress the brake pedal and push the ignition switch to start the engine.

   To start the engine immediately, push and release the ignition switch while depressing the brake pedal with the ignition switch in any position.
   - If the engine is very hard to start in extremely cold weather or when restarting, depress the accelerator pedal a little (approximately 1/3 to the floor) and while holding, crank the engine. Release the accelerator pedal when the engine starts.
   - If the engine is very hard to start because it is flooded, depress the accelerator pedal all the way to the floor and hold it. Push the ignition switch to the ON position to start cranking the engine. After 5 or 6 seconds, stop cranking by pushing the ignition switch to the LOCK position. After cranking the engine, release the accelerator pedal. Crank the engine with your foot off the accelerator pedal by depressing the brake pedal and pushing the ignition switch to start the engine. If the engine starts, but fails to run, repeat the above procedure.

   Do not operate the starter for more than 15 seconds at a time. If the engine does not start, push the ignition switch to the OFF position and wait 10 seconds before cranking again, otherwise the starter could be damaged.

   Do not operate the starter for more than 15 seconds at a time. If the engine does not start, push the ignition switch to the OFF position and wait 10 seconds before cranking again, otherwise the starter could be damaged.
4. **Warm-up:**

   Allow the engine to idle for at least 30 seconds after starting. Do not race the engine while warming it up. Drive at a moderate speed for a short distance first, especially in cold weather. In cold weather, keep the engine running for a minimum of 2 to 3 minutes before shutting it off. Starting and stopping the engine over a short period of time may make the vehicle more difficult to start.
5. To stop the engine, place the shift position into the P (Park) position and push the ignition switch to the OFF position.

NOTE:

Care should be taken to avoid situations that can lead to potential battery discharge and potential no-start conditions such as:

1. **Installation or extended use of electronic accessories that consume battery power when the engine is not running (phone chargers, GPS, DVD players, etc.).**
2. **The vehicle is not driven regularly and/or only driven short distances**

In these cases, the battery may need to be charged to maintain battery health.

REMOTE ENGINE START

Vehicles started with the Remote Engine Start require the ignition switch to be placed in the ON position before the shift position can be moved from the P (Park) position. To place the ignition switch in the ON position, follow these steps:

1. Make sure that the Intelligent Key is on you.
2. Apply the brake.
3. Push the ignition switch once to the ON position.

For additional information, see "NISSAN Intelligent Key®" (P. 183).

ENGINE PROTECTION MODE

The engine has an engine protection mode to reduce the chance of damage if the coolant temperature becomes too high (for example, when climbing steep grades in high temperatures with heavy loads, such as when towing a trailer). When the engine temperature reaches a certain level:

- The engine coolant temperature gauge will move toward the H position.
- Engine power may be reduced.
- The air conditioning cooling function may be automatically turned off for a short time (the blower will continue to operate).

Engine power and, under some conditions, vehicle speed will decrease. Vehicle speed can be controlled with the accelerator pedal, but the vehicle may not accelerate at the desired speed. The transmission will downshift or upshift as it reaches prescribed shift points. You can also shift manually.

As driving conditions change and engine coolant temperature is reduced, vehicle speed can be increased using the accelerator pedal, and the air conditioning cooling function will automatically be turned back on.

The Malfunction Indicator Light (MIL) may also come on if the engine coolant temperature is not reduced or the air conditioning cooling function does not turn back on. If **only** it remains on, you do not need to have your vehicle towed, but have it inspected soon. It is recommended that you visit a NISSAN dealer for this service. For additional information, see "Malfunction Indicator Light (MIL)" (P. 94).

⚠ WARNING

Overheating can result in reduced engine power and vehicle speed. The reduced speed may be lower than other traffic, which could increase the chance of a collision. Be especially careful when driving. If the vehicle cannot maintain a safe driving speed, pull to the side of the road in a safe area. Allow the engine to cool and return to normal operation. For additional information, see "If your vehicle overheats" (P. 472).

⚠ CAUTION

Running the engine with the engine oil pressure warning light on could cause serious damage to the engine almost immediately. Such damage is not covered by warranty. Turn off the engine as soon as it is safe to do so.

AUTOMATIC TRANSMISSION (A/T)

Basic Information

⚠ WARNING

- **Do not depress the accelerator pedal while shifting from P (Park) or N (Neutral) to R (Reverse), D (Drive), or M (Manual shift mode). Always depress the brake pedal until shifting is completed. Failure to do so could cause you to lose control and have an accident.**
- **Cold engine idle speed is high, so use caution when shifting into a forward or reverse gear before the engine has warmed up.**
- **Do not downshift abruptly on slippery roads. This may cause a loss of control.**
- **Never shift to either the P (Park) or R (Reverse) position while the vehicle is moving forward and P (Park) or D (Drive) position while the vehicle is reversing. This could cause an accident or damage the transmission.**

⚠ CAUTION

- **To avoid possible damage to your vehicle, when stopping the vehicle on an uphill grade, do not hold the vehicle by depressing the accelerator pedal. The foot brake should be used for this purpose.**
- **Except in an emergency, do not shift to the N (Neutral) position while driving. Coasting with the transmission in the N (Neutral) position may cause serious damage to the transmission.**

The A/T in your vehicle is electronically controlled to produce maximum power and smooth operation.

The recommended operating procedures for this transmission are shown on the following pages. Follow these procedures for maximum vehicle performance and driving enjoyment.

Engine power may be automatically reduced to protect the A/T if the engine speed increases quickly when driving on slippery roads or while being tested on some dynamometers.

Starting the vehicle

1. After starting the engine, fully depress the foot brake pedal before moving the shift position out of the P (Park) position.
   This Automatic Transmission is designed so that the foot brake pedal must be depressed before shifting from P (Park) to any driving position while the ignition switch is in the ON position.
   The shift position cannot be shifted out of the P (Park) position and into any of the other positions if the engine is not running.
2. Keep the foot brake pedal depressed and place the shift position in a driving position.
3. Release the parking brake and foot brake pedal and then gradually start the vehicle in motion.

⚠ WARNING

- **Do not depress the accelerator pedal while shifting from P (Park) or N (Neutral) to R (Reverse), D (Drive) or M (Manual) range. Always depress the brake pedal until shifting is completed. Failure to do so could cause you to lose control and have an accident.**
- **Cold engine idle speed is high, so use caution when shifting into a forward or reverse gear before the engine has warmed up.**
- **Do not downshift abruptly on slippery roads. This may cause a loss of control.**
- **Never shift to either the P (Park) or R (Reverse) position while the vehicle is moving forward and P (Park) or D (Drive) position while the vehicle is reversing. This could cause an accident or damage the transmission.**

⚠ CAUTION

- **To avoid possible damage to your vehicle; when stopping the vehicle on an uphill grade, do not hold the vehicle by depressing the accelerator pedal. The foot brake should be used for this purpose.**
- **Except in an emergency, do not shift to the N (Neutral) position while driving. Coasting with the transmission in the N (Neutral) position may cause serious damage to the transmission.**
- **WARM UP THE ENGINE – Due to the higher idle speeds, the engine is cold. Extra caution must be exercised when shifting into a driving position immediately after starting the engine.**

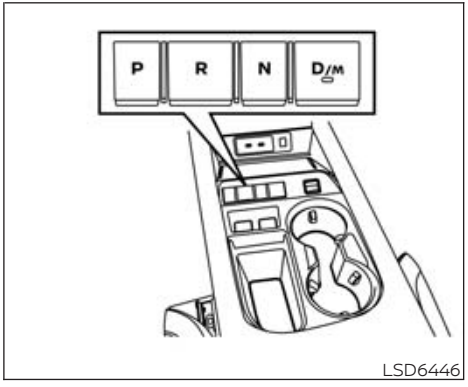

LSD6446

Shifting

Basic information

After starting the engine, fully depress the brake pedal and press the shift button to the R (Reverse), N (Neutral) or D (Drive)/M (Manual shift mode) position.

After operating the shift button, make sure that the shift position is switched to the intended one.

NOTE:

- **The P (Park) position is automatically engaged if:**
  - **The ignition switch is placed in the OFF position.**
  - **When the driver's seat belt is unfastened and the driver's door is opened when the vehicle is stationary or driving at very low speed and the transmission is in the D (Drive) position, the N (Neutral) position, the R (Reverse) position or M (Manual) mode with your foot off the brake.**
- **The vehicle automatically applies the P (Park) position when the ignition switch is placed in the OFF position. However, if the electric shift control system malfunctions and you try to place the ignition switch to the OFF position when the shift position is other than P (Park), a buzzer will sound and you will not be able to place the ignition switch to OFF. If this occurs, follow the steps below.**
  - **Stop the vehicle and apply the parking brake.**
  - **While depressing the brake pedal, push the ignition switch to the ON position.**
  - **Press the P (Park) button to change the transmission to P (Park) position.**
  - **Push the ignition switch to the OFF position.**

⚠ WARNING

- **If you use an implantable cardiac pacemaker, an implantable cardioverter defibrillator (ICD) or other medical devices, keep the implanted body parts away from the shift button. The strong magnet in shift button may affect the operation of medical devices.**
- **Keep magnetic cards or things with magnetic force away from the shift button. It may cause malfunction and lead to an accident.**
- **Apply the parking brake if the transmission is in any position while the engine is not running. Failure to do so could cause the vehicle to move unexpectedly or roll away and result in serious personal injury or property damage.**
- **On a hilly road, do not allow the vehicle to roll backwards while in the D (Drive) position or M position, or allow the vehicle to roll forward while in the R (Reverse) position. This may cause an accident.**

⚠ CAUTION

Make sure the vehicle is completely stopped and the transmission is in the P (Park) position.

P (Park)

Use this position when the vehicle is parked or when starting the engine. Make sure the vehicle is completely stopped. **The brake pedal must be depressed to change the shift position from the N (Neutral) position or any drive position to the P (Park) position.** Apply the parking brake. When parking on a hill, first depress the brake pedal, apply the electronic parking brake and then engage the P (Park) position.

The parking lock should not be used as a brake when parking. In order to secure the vehicle, always apply the electronic parking brake in addition to parking lock.

In the event of a malfunction of the vehicle's electronics, the transmission may lock in the P (Park) position. Have the vehicle's electronics checked immediately.

It is recommended that you visit a NISSAN dealer for this service.

The P (Park) position is automatically engaged if:

- **The ignition switch is placed in the OFF position.**
- **When the driver's seat belt is unfastened and the driver's door is opened when the vehicle is stationary or driving at very low speed and the transmission is in the D (Drive) position, the N (Neutral) position, the R (Reverse) position or M (Manual) mode with your foot off the brake.**

⚠ CAUTION

Use this position only when the vehicle is completely stopped.

NOTE:

- **While the vehicle is stationary, if the shift position is placed in any position other than the P (Park) position when the ignition switch is placed in the OFF position, it will automatically switch to the P (Park) position.**
- **When the P (Park) position button is pressed while driving, the operation is canceled. (A buzzer sounds and the shift position before being operated is maintained.)**

R (Reverse)

Use this position to back up. Always be sure the vehicle is completely stopped before selecting the R (Reverse) position. **The brake pedal must be depressed to change the shift position from the P (Park) position, the N (Neutral) position or any drive position to the R (Reverse) position.**

NOTE:

If the vehicle is shifted to the R (Reverse) position while the vehicle is moving forward, the chime will sound and the vehicle will switch into the N (Neutral) position.

N (Neutral)

Neither forward nor reverse gear is engaged. The engine can be started in this position. You may select the N (Neutral) position and restart a stalled engine while the vehicle is moving.

D (Drive)

Use this position for all normal forward driving.

NOTE:

If the vehicle is placed in the D (Drive) position while the vehicle is reversing, the chime will sound and the vehicle will switch into the N (Neutral) position.

Neutral hold mode function

This function enables you to get out of the vehicle when it is in the N (Neutral) position, while the engine is running. While this function is activated, the vehicle can be moved by pushing with hand (when car washing). When using this function, release the electronic parking brake.

⚠ WARNING

- **Use this function on a level surface only. Failure to do so may cause the vehicle to move accidentally and could result in a collision or serious personal injury.**
- **Do not use this function for a purpose other than car washing.**
- **Do not turn the engine off after neutral hold mode function is activated, otherwise the N (Neutral) position will not be kept and the vehicle will automatically be placed in the P (Park) position.**
- **If this function is not activated regardless of proper operation, transmission may malfunction. It is recommended that you visit a NISSAN dealer for this service.**

To activate the Neutral hold mode, perform the following operations:

1. Push the ignition switch to start the engine.
2. Release the electronic parking brake.
3. Depress and hold the brake pedal.
4. Press the P (Park) button.
5. Press the N (Neutral) button twice, until "N" appears in the vehicle information display.
6. Press the N (Neutral) button twice, until a message "Neutral Hold Mode has been activated" appears in the vehicle information display. For additional information, see "Neutral Hold Mode has been activated" (P. 118).
7. The ignition switch has to be kept in the ON position. Otherwise Neutral hold mode is canceled and the P (Park) position is engaged automatically.

To exit the Neutral hold mode, place the vehicle in other than the N (Neutral) position.

NOTE:

- **It is necessary to perform the steps 4 through 6 within approximately 5 seconds to prevent incorrect operation.**
- **When the shift position is changed to the N (Neutral) position, a message will appear in the vehicle information display. For additional information, see "Neutral Hold Mode Guidance" (P. 118).**
- **If the Neutral hold mode is unavailable, a message will appear in the vehicle information display. For additional information, see "Neutral Hold Mode was not activated" (P. 118). To activate the Neutral hold mode, wait for a while without shifting operation and then perform the operations again.**

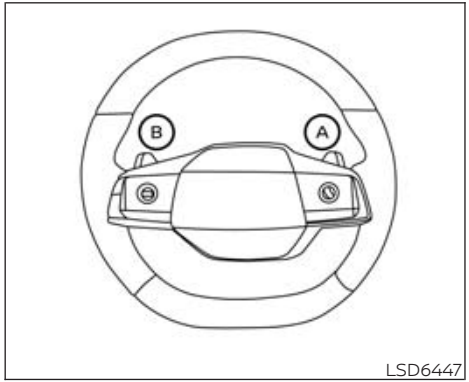

Manual shift mode

Basic information

When the transmission is shifted to the D (Drive) position again with the vehicle in the D (Drive) position while driving, the transmission enters the manual shift mode. Shift range can be selected manually using the paddle shifters on the steering wheel.

When shifting up, pull the right-side paddle shifter (+) Ⓐ. The transmission shifts to the higher range.

When shifting down, pull the left-side paddle shifter (–) Ⓑ. The transmission shifts to the lower range.

When canceling the manual shift mode, shift the transmission to the D (Drive) position again. The transmission returns to the normal driving mode.

When you pull the paddle shifter while in the D (Drive) position, the transmission will shift to the upper or lower range temporarily. The transmission will automatically return to the D (Drive) position after a short period of time. If you want to return to the D (Drive) position manually, pull and hold the paddle shifter for about 1.5 seconds.

The paddle shifter can be switched only when the vehicle is driven in the D (Drive) position over the speed of approximately 8 mph (12 km/h).

In the manual shift mode, the shift range is displayed in the vehicle information display.

Shift ranges up or down one by one as follows:

1M⇔ 2M ⇔ 3M ⇔ 4M ⇔ 5M ⇔ 6M ⇔ 7M ⇔ 8M ⇔ 9M

9M (9th) and 8M (8th)

Use this position for all normal forward driving at highway speeds.

7M (7th), 6M (6th) and 5M (5th)

Use these positions when driving up long slopes, or for engine braking when driving down long slopes.

4M (4th), 3M (3rd) and 2M (2nd)

Use these positions for hill climbing or engine braking on downhill grades.

1M (1st)

Use this position when climbing steep hills slowly or driving slowly through deep snow, or for maximum engine braking on steep downhill grades.

- Remember not to drive at high speeds for extended periods of time in lower than the 8th range. This reduces fuel economy.
- Pulling the same paddle shifter twice will shift the ranges in succession. However, if this motion is rapidly done, the second shifting may not be completed properly.
- **In the manual shift mode, the transmission may not shift to the selected gear. This helps maintain driving performance and reduces the chance of vehicle damage or loss of control.**

- **In the manual shift mode, the transmission may shift up automatically to a higher range than selected if the engine speed is too high. When the vehicle speed decreases, the transmission automatically shifts down and shifts to 1st gear before the vehicle comes to a stop.**

Accelerator downshift — in D (Drive) position —

For passing or hill climbing, depress the accelerator pedal to the floor. This shifts the transmission down into a lower gear, depending on the vehicle speed.

High fluid temperature protection mode

This transmission has a high fluid temperature protection mode. If the fluid temperature becomes too high (for example, when climbing steep grades in high temperatures with heavy loads, such as when towing a trailer), engine power and, under some conditions, vehicle speed will be decreased automatically to reduce the chance of transmission damage. Vehicle speed can be controlled with the accelerator pedal, but the engine and vehicle speed may be limited.

Fail-safe

When the fail-safe operation occurs, please note that the transmission will be locked in any of the forward gears according to the condition.

If the vehicle is driven under extreme conditions, such as excessive wheel spinning and subsequent hard braking, the fail-safe system may be activated. The Malfunction Indicator Light (MIL) may come on to indicate the fail-safe mode is activated. For additional information, see "Malfunction Indicator Light (MIL)" (P. 94). This will occur even if all electrical circuits are functioning properly. In this case, place the ignition switch in the OFF position and wait for 10 seconds. Then push the switch back to the ON position. The vehicle should return to its normal operating condition. If it does not return to its normal operating condition (the Malfunction Indicator Light may illuminate even when the vehicle has returned to its normal operating condition), it is recommended that you visit a NISSAN dealer for this service.

⚠ WARNING

When the high fluid temperature protection mode or fail-safe operation occurs, vehicle speed may be gradually reduced. The reduced speed may be lower than other traffic, which could increase the chance of a collision. Be especially careful when driving. If necessary, pull to the side of the road at a safe place and allow the transmission to return to normal operation, or have it repaired if necessary.

BASIC INFORMATION

WARNING

- **Be sure the parking brake is fully released before driving. Failure to do so can cause brake failure and lead to an accident.**
- **Do not release the parking brake from outside the vehicle.**
- **Do not use the shift buttons in place of the parking brake. When parking, be sure the parking brake is fully engaged.**
- **To help avoid risk of injury or death through unintended operation of the vehicle and/or its systems, do not leave children, people who require the assistance of others or pets unattended in your vehicle. Additionally, the temperature inside a closed vehicle on a warm day can quickly become high enough to cause a significant risk of injury or death to people and pets.**

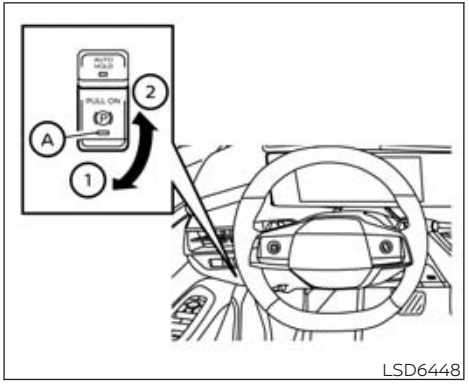

LSD6448

ELECTRONIC PARKING BRAKE (switch type)

The electronic parking brake can be applied or released by operating the parking brake switch.

WARNING

- **Before leaving the vehicle, move the shift position to the P (Park) position and check that the electronic parking brake warning light is illuminated to confirm that the electronic parking brake is applied. The electronic parking brake warning light will remain on for a period of time after the driver's door is locked.**

CAUTION

When parking in an area where the outside temperature is below 32°F (0°C), the parking brake, if applied, may freeze in place and may be difficult to release.

For safe parking, it is recommended that you place the shift position in the P (Park) position and securely block the wheels.

NOTE:

- **To keep the electronic parking brake released after the engine is turned off, place the ignition switch in the OFF position, depress the brake pedal and push down the parking brake switch before opening the driver's door.**
- **If a malfunction occurs in the electronic parking brake system (for example, due to battery discharge), it is recommended that you visit a NISSAN dealer.**

- **Under the following conditions the electronic parking brake will automatically be applied and the braking force of the automatic brake hold will be released:**
  - **The automatic brake hold indicator light turns off.**
  - **The braking force is applied by the automatic brake hold function for 3 minutes or longer.**
  - **The vehicle is in the P (Park) position.**
  - **The electronic parking brake is applied manually.**
  - **The driver's seat belt is unfastened.**
  - **The driver's door is opened.**
  - **The ignition switch is placed in the OFF position.**
  - **A malfunction occurs in the automatic brake hold function.**

MANUAL OPERATION

To apply: Pull the switch up ①. The indicator light Ⓐ will illuminate.

To release: With the ignition switch in the ON position, depress the brake pedal and push the switch down ②. The indicator light Ⓐ will turn off.

Before driving, check that the electronic parking brake indicator light (Ⓟ or PARK) goes out. For additional information, see "Warning & Indicator Lights" (P. 86).

NOTE:

- **While the electronic parking brake is applied or released, an operating sound is heard from the lower side of the rear seat. This is normal and does not indicate a malfunction.**
- **When the electronic parking brake is frequently applied and released in a short period of time, the parking brake may not operate in order to prevent the parking brake system from overheating. If this occurs, operate the electronic parking brake switch again after waiting approximately 1 minute.**
- **If the electronic parking brake must be applied while driving in an emergency, pull up and hold the parking brake switch. When you release the parking brake switch, the parking brake will be released.**
- **While pulling up the electronic parking brake switch during driving, the parking brake is applied and a chime sounds. The electronic parking brake indicator light in the meter and in the parking brake switch illuminates. This does not indicate a malfunction. The electronic parking brake indicator light in the meter and in the parking brake switch turns off when the parking brake is released.**
- **When pulling the electronic parking brake switch up with the ignition switch in the OFF or AUTO ACC position, the parking brake switch indicator light will continue to illuminate for a short period of time.**

BASIC INFORMATION

The automatic brake hold function maintains the braking force without the driver having to depress the brake pedal when the vehicle is stopped at a traffic light or intersection. As soon as the driver depresses the accelerator pedal again, the automatic brake hold function is deactivated and the braking force is released. The operating status of the automatic brake hold function can be displayed.

To use the automatic brake hold function, the following conditions need to be met:

- The driver's seat belt is fastened.
- The electronic parking brake is released.
- The vehicle is not in the P (Park) position.
- The vehicle is not stopped on a steep hill.

For additional information, see "Warning & Indicator Lights" (P. 86).

⚠ WARNING

- **The automatic brake hold function is not designed to hold the vehicle on a steep hill or slippery road. Never use the automatic brake hold function when the vehicle is stopped on a steep hill or slippery road. Failure to do so may cause the vehicle to move.**
- **Warnings may appear to request that the driver retake control by depressing the brake pedal.**
- **When the automatic brake hold function is activated but fails to maintain the vehicle at a standstill, depress the brake pedal to stop the vehicle. If the vehicle unexpectedly moves due to outside conditions, the chime may sound and automatic brake hold warning may appear.**
- **Be sure to deactivate the automatic brake hold function when using a car wash machine, towing your vehicle or overloaded.**
- **Make sure the vehicle is in the P (Park) position and apply the parking brake when parking your vehicle, entering or exiting the vehicle, or loading or unloading luggage. Failure to do so could cause the vehicle to move or roll away unexpectedly and result in serious personal injury or property damage.**
- **If any of the following conditions occur, the automatic brake hold function may not function. Have the system checked promptly. It is recommended that you visit a NISSAN dealer for this service. Failure to operate the vehicle in accordance with these conditions could cause the vehicle to move or roll away unexpectedly and result in serious personal injury or property damage.**
  - **A warning message appears in the vehicle information display.**
  - **The indicator light on the automatic brake hold switch does not illuminate when the switch is pushed.**
- **The automatic brake hold function will not be activated if the slip indicator light, electronic parking brake warning light, electronic parking brake indicator light or master warning light illuminates and the Chassis Control System Error warning message appears in the vehicle information display.**

- **Automatic brake hold function is operated by applying sufficient braking force to hold the vehicle in its place, so there are cases when this hold function is maintained even if the accelerator pedal is depressed. In this situation, it is advised to depress the brake pedal first, then to turn off automatic brake hold switch. This will cancel the hold function.**
- **To maintain the braking force to keep the vehicle to a standstill, a noise may be heard. This is not a malfunction.**

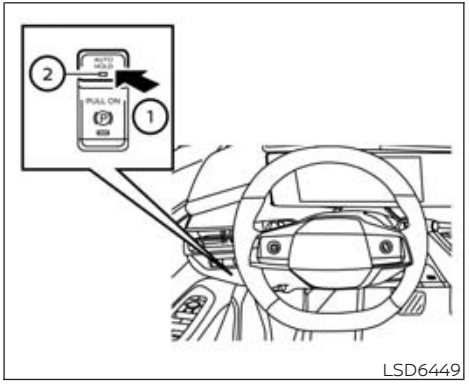

HOW TO ACTIVATE/DEACTIVATE THE AUTOMATIC BRAKE HOLD FUNCTION

How to activate the automatic brake hold function

1. With the ignition switch in the ON position, push the automatic brake hold switch ①. The indicator light on the automatic brake hold switch ② illuminates.
2. When the automatic brake hold function goes into standby, the automatic brake hold indicator light (white) illuminates.

To use the automatic brake hold function, the following conditions need to be met:

- The driver's seat belt is fastened.
- The electronic parking brake is released.
- The vehicle is not in the P (Park) position.
- The vehicle is not stopped on a steep hill.

NOTE:

The automatic brake hold function retains the last state until the driver changes the option even if the ignition switch is turned OFF.

How to deactivate the automatic brake hold function

While the automatic brake hold function is activated, push the automatic brake hold switch to turn off the automatic brake hold indicator light and deactivate the automatic brake hold function. To deactivate the automatic brake hold function while the brake force has been maintained by the automatic brake hold function, depress the brake pedal and push the automatic brake hold switch.

⚠ WARNING

Make sure to firmly depress and hold the brake pedal when turning off the automatic brake hold function while the brake force is applied. When the automatic brake hold function is deactivated, the brake force will be released. This could cause the vehicle to move or roll away unexpectedly. Failure to prevent the vehicle from rolling may result in serious personal injury or property damage.

HOW TO USE THE AUTOMATIC BRAKE HOLD FUNCTION

Basic information

For additional information on using the automatic brake hold function, refer to the instructions outlined in this section.

To maintain braking force automatically

With the automatic brake hold function activated and the automatic brake hold indicator light (white) illuminated, depress the braking pedal to stop the vehicle, and the automatic brake hold indicator light (green) illuminates. The brake force is automatically applied without your foot depressed on the brake pedal. While the brake force is maintained, the automatic brake hold indicator light (green) illuminates.

The automatic brake hold indicator light (green) will not illuminate if the brake pedal is not depressed with sufficient force to hold the vehicle or is released too quickly when the vehicle is stopped.

Confirm the automatic brake hold indicator light (green) is illuminated before removing your foot from the brake pedal.

To start the vehicle from a standstill

With the vehicle not in the P (Park) or the N (Neutral) position, depress the accelerator pedal while the brake force is maintained. The brake force will automatically be released to restart the vehicle.

The automatic brake hold indicator light (white) illuminates and the automatic brake hold function returns to standby.

Parking

When the vehicle is in the P (Park) position with the brake force maintained by the automatic brake hold function, the parking brake will automatically be applied and the brake force of the automatic brake hold function will be released. When the parking brake is applied with the brake force maintained by the automatic brake hold function, the brake force of the automatic brake hold will be released.

NOTE:

- **Under the following conditions the electronic parking brake will automatically be applied and the braking force of the automatic brake hold function will be released. The automatic brake hold indicator light turns off.**
  - **The braking force is applied by the automatic brake hold function for 3 minutes or longer.**
  - **The vehicle is in the P (Park) position.**
  - **The electronic parking brake is applied manually.**
  - **The driver's seat belt is unfastened.**
  - **The driver's door is opened.**
  - **The ignition switch is placed in the OFF position.**
  - **A malfunction occurs in the automatic brake hold function.**

When the vehicle stops, but the braking force is not automatically applied, depress the brake pedal firmly until the automatic brake hold indicator light (green) illuminates.

When the vehicle stops on a slope, depress the brake pedal firmly until the automatic brake hold indicator light (green) illuminates.

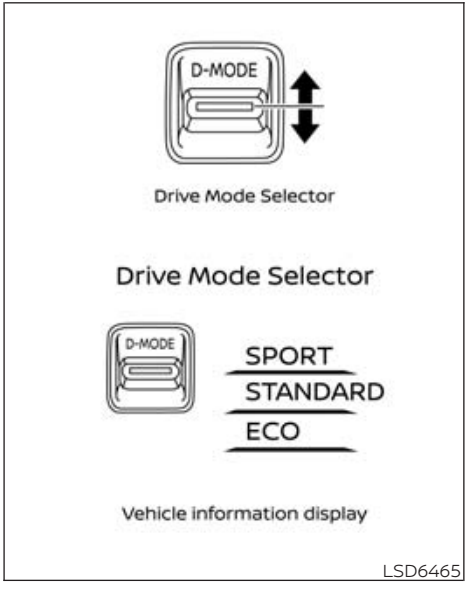

Drive Mode Selector

BASIC INFORMATION

Multiple driving modes can be selected by using the Drive Mode Selector. SPORT, STANDARD, and ECO.

To change the mode, push the Drive Mode Selector up or down.

NOTE:

When the Drive Mode Selector selects a mode, the mode may not switch immediately. This is not a malfunction.

The current mode is displayed in the vehicle information display. The mode list will appear in the vehicle information display and you can select the mode.

NOTE:

- **The mode list will be turned off in a few seconds after the mode is selected.**
- **You can also clear the message by pushing the scroll dial on the steering wheel mounted controls.**

If the driving mode cannot be switched using the Drive Mode Selector when the ignition switch is in the ON position, have the system checked. It is recommended you visit a NISSAN dealer for this service.

NOTE:

The STANDARD MODE will be selected first each time the ignition switch is placed in the ON position.

⚠ WARNING

- **Do not stare at the Drive Mode Selector or the display while driving so that full attention may be given to vehicle operation.**
- **Avoid abrupt acceleration, steering or sudden braking especially on slippery roads. Otherwise tire slip, skid or tail-swing occurs; this may cause an accident.**

STANDARD MODE

This is the standard mode that is most suitable for normal driving.

SPORT MODE

- Adjusts the engine and transmission points for a higher response.
- The setting of the steering system is adjusted to moderately increase steering wheel effort for a sporty feel.

NOTE:

In the SPORT mode, fuel economy may be reduced.

ECO MODE

Basic information

Assists the driver's ECO-driving. The engine points are adjusted for improved fuel economy, providing such driving features as smooth starting or constant cruising.

NOTE:

- **Selecting the ECO mode will not necessarily improve fuel economy as many driving factors influence its effectiveness.**
- **It is recommended to select other than ECO mode when acceleration is required such as when:**
  - **Driving with a heavy load of passengers or cargo in the vehicle.**
  - **Driving on a steep uphill slope.**

Operation

Select the ECO mode using the Drive Mode Selector. The ECO indicator illuminates.

When the accelerator pedal is depressed within the range of economy drive, the ECO drive indicator illuminates in green. When the accelerator pedal is depressed above the range of economy drive, the ECO drive indicator turns off.

The ECO drive indicator will not illuminate in the following cases:

- When the shift position is in the R (Reverse) position.
- When the vehicle speed is below 2 mph (3.2 km/h) or over 90 mph (144 km/h).
- When the ProPILOT Assist system is operated.

ECO Customize

The ECO mode changes the air conditioning, cruise control, and idling stop settings to save fuel. You can use the ECO customize menu to adjust these settings to balance the fuel economy and performance for your preference. To activate or deactivate this function, see "ECO Mode Setting" (P. 110).

- Cruise Control

  When the setting is set to ON, The cruise control acceleration characteristic is less aggressive to improve fuel efficiency. When the setting is OFF the cruise control uses the normal acceleration characteristics.

NOTE:

When the vehicle speed is reduced (for example, when the vehicle is driven on an uphill road from a flat road), it will take more time to return to the previously set speed than normal mode.

- Idling Stop

  When the setting is set to ON, when idling stop activates the engine remains off for a longer time than normal mode while using the air conditioner. This improves fuel efficiency by increasing engine off time when vehicle is stopped. For details about Idling Stop System, see "Idling Stop System" (P. 445).
- Air Conditioning

  If the eco customize air conditioning control is set to ON, the fuel efficiency will be improved by reducing the performance of the air conditioning system.

Tire Pres ECO advice

The "Tire Pres ECO advice" is a function to show ECO advice information in the vehicle information display when low tire pressure is detected. To activate or deactivate this function, see "ECO Mode Setting" (P. 110).

When the setting is on, the ECO Drive Report display shows "See Tire Pressures". You can switch the display to the Tire Pressures display by selecting it in the vehicle information display.

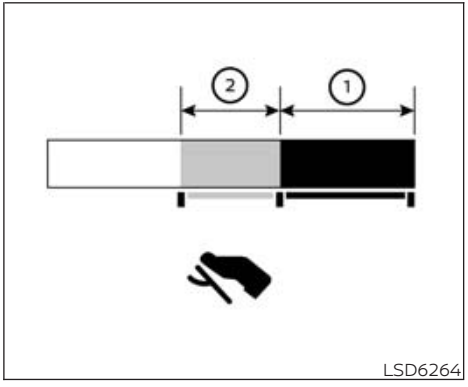

ECO pedal guide function (if so equipped)

The ECO Pedal Guide display can be selected in the vehicle information display in the ECO mode. Use the ECO Pedal Guide function for improving fuel economy.

When the ECO Pedal Guide bar is in the green range ①, it indicates that the vehicle is being driven within range of the super economy drive.

When the ECO Pedal Guide bar is in the light green range ②, it indicates that the vehicle is being driven within range of the economy drive.

If the ECO Pedal Guide bar is out of the green range (① and ②), it indicates that the accelerator pedal is depressed over the range of economy drive.

The ECO Pedal Guide bar is not displayed when:

- The vehicle speed is less than approximately 2 mph (4 km/h).
- The shift position is in the P (Park), N (Neutral) or R (Reverse) position.

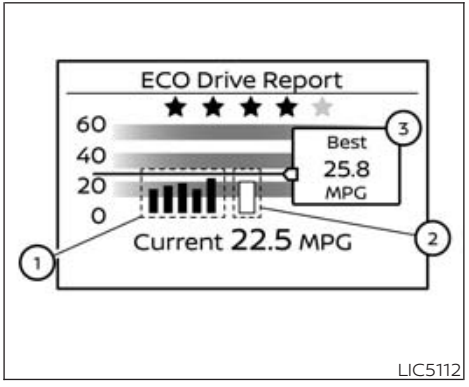

Eco Drive Report (if so equipped)

When the ignition switch is in the OFF position, the ECO management display appears.

① Previous 5 times (History)

② Current fuel economy

③ Best fuel economy

The result of ECO evaluation is displayed 30 seconds after the ignition switch is placed in the ON position and the vehicle is driven at least 1/3 miles (500 meters).

① The average fuel economy for the previous 5 times will be displayed.

② The average fuel economy since the last reset will be displayed.

③ The best fuel economy of the past history will be displayed.

The ECO Drive Report can be set to be ON or OFF.

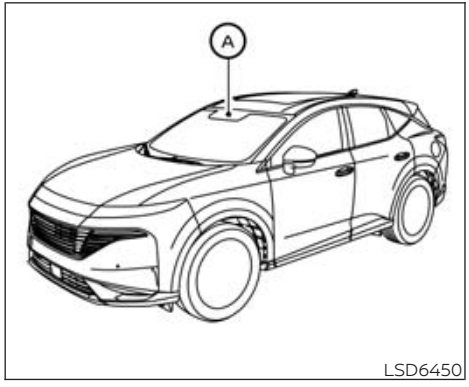

LSD6450

BASIC INFORMATION

The TSR system provides the driver with information about the most recently detected speed limit. The system captures the road sign information with the multi-sensing front camera unit Ⓐ located on the windshield in front of the inside rear-view mirror and displays the detected signs in the vehicle information display. For vehicles equipped with a navigation system, the speed limit displayed is based on a combination of navigation system data and live camera recognition. TSR information is always displayed at the top of the vehicle information display if the system is enabled in the Driver Assistance settings.

⚠WARNING

The TSR system is only intended to be a support device to help provide the driver with information. It is not a replacement for the driver's attention to traffic conditions or responsibility to drive safely. It cannot prevent accidents due to carelessness. It is the driver's responsibility to stay alert and drive safely at all times.

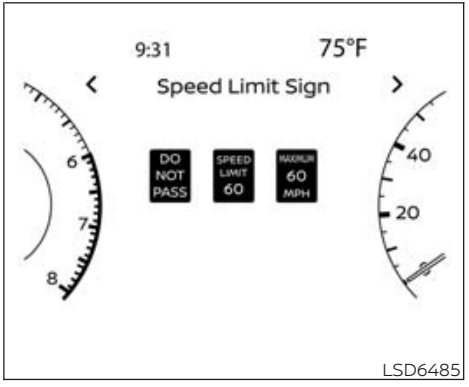

LSD6485

SYSTEM OPERATION

The Traffic Sign Recognition (TSR) system displays the following types of road signs:

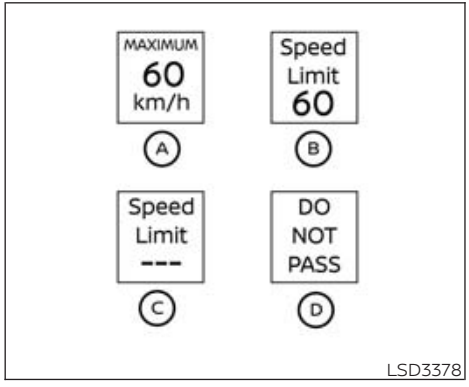

Ⓐ Speed sign detected (in Canada)

Ⓑ Speed sign detected (in USA)

Ⓒ Speed sign detected (no speed limit detected)

Ⓓ "Do not pass" sign detected

⚠ CAUTION

- **The TSR system is intended as an aid to careful driving. It is the driver's responsibility to stay alert, drive safely, and observe all road regulations that currently apply, including looking out for road signs.**
- **The TSR system may not function properly under the following conditions:**
  - **When the road sign is not clearly visible, for example, due to damage or weather conditions.**
  - **When rain, snow or dirt adheres to the windshield in front of the multi-sensing camera unit.**
  - **When the headlights are not bright, for example, due to dirt on the lens or if the aiming is not adjusted properly.**
  - **When strong light enters the camera unit. (For example, the light directly shines on the front of the vehicle at sunrise or sunset.)**
  - **When a sudden change in brightness occurs. (For example, when the vehicle enters or exits a tunnel or under a bridge.)**
  - **In areas not covered by the navigation system.**
  - **If there are deviations in relation to the navigation, for example due to changes in the road routing.**
  - **When overtaking buses or trucks with speed stickers.**
  - **When the data from the navigation system is not up-to-date or is unavailable.**
- **The TSR system may display a traffic sign, though there is no traffic sign in front of the vehicle. It may display a different speed limit from that for a passenger vehicle. (The maximum speed limit sign may show a higher or lower number than the actual maximum speed, for example, when detecting a speed limit sign for truck, advisory sign, different speed limit sign between daytime and nighttime, or speed limit sign written in different unit near the border, etc.)**

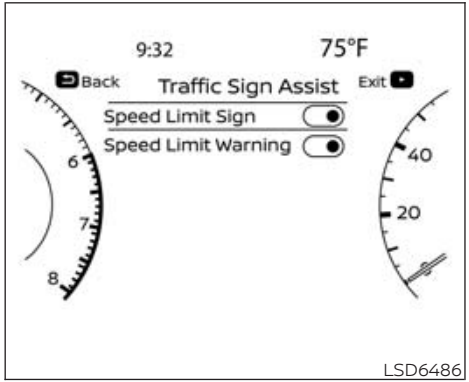

TURNING THE TRAFFIC SIGN RECOGNITION (TSR) SYSTEM ON AND OFF

Perform the following steps to enable or disable the TSR system.

1. Press the ◀ ▶ button until "Settings" displays in the vehicle information display and then press the OK button. Use the scroll dial to select "Driver Assistance." Then press the OK button.
2. Select "Traffic Sign Assist" and press the OK button.
3. Select "Speed Limit Sign" and press the OK button to turn the system on or off.
4. Select "Speed Limit Warning" and press the OK button to turn the system on or off.

SYSTEM TEMPORARILY UNAVAILABLE

If the vehicle is parked in direct sunlight under high temperature conditions (over approximately 104°F [40°C]) and then started, the TSR system may be deactivated automatically. The "Unavailable Camera Temperature High" warning message will appear in the vehicle information display.

Action to take:

When the interior temperature is reduced, the TSR system will resume operating automatically.

SYSTEM MALFUNCTION

If the TSR system malfunctions, it will be turned off automatically and the LDW indicator (orange) or the TSR system fault warning message will illuminate in the vehicle information display.

Action to take:

If the LDW indicator (orange) or the TSR system fault warning message illuminates in the display, pull off the road at a safe location and stop the vehicle. Turn the engine off and restart the engine. If the LDW indicator (orange) or the TSR system fault warning message continues to illuminate, have the system checked. It is recommended that you visit a NISSAN dealer for this service.

SYSTEM MAINTENANCE

The TSR system uses the same multi-sensing front camera unit that is used by the Lane Departure Warning (LDW) system, located in front of the interior rearview mirror. For additional information, see "System maintenance" (P. 308).

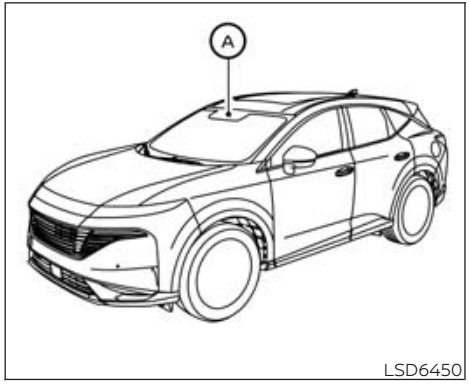

The LDW system will operate when the vehicle is driven at speeds of approximately 37 mph (60 km/h) and above, and only when the lane markings are clearly visible on the road.

The LDW system monitors the lane markers on the traveling lane using the camera unit Ⓐ located above the inside mirror.

The LDW system warns the driver that the vehicle is beginning to leave the driving lane with an indicator and a steering wheel vibration. For additional information, see "LDW system operation" (P. 305).

BASIC INFORMATION

⚠ WARNING

Failure to follow the warnings and instructions for proper use of the LDW system could result in serious injury or death.

- **This system is only a warning device to inform the driver of a potential unintended lane departure. It will not steer the vehicle or prevent loss of control. It is the driver's responsibility to stay alert, drive safely, keep the vehicle in the traveling lane, and be in control of the vehicle at all times.**

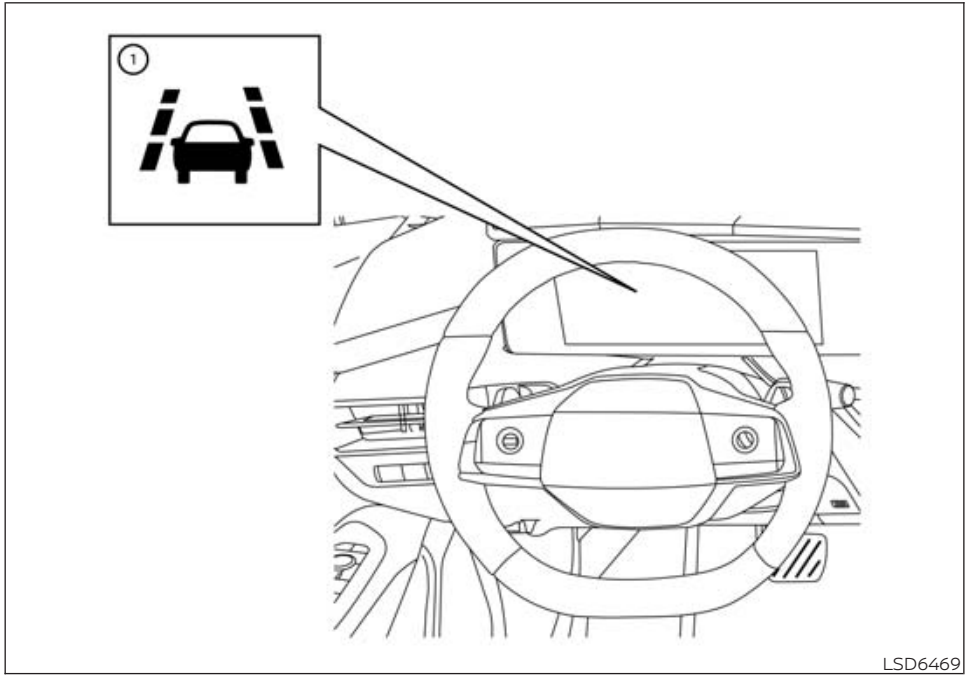

LDW SYSTEM OPERATION

① Lane Departure Warning (LDW)

The LDW system provides a lane departure warning function when the vehicle is driven at speeds of approximately 37 mph (60 km/h) and above and the lane markings are clear. When the vehicle approaches either the left or the right side of the traveling lane, the steering wheel will vibrate and the LDW indicator ① on the instrument panel will blink (yellow) to alert the driver.

The warning function will stop when the vehicle returns inside of the lane markers.

The strength of the steering wheel vibration can be changed in the settings menu of the vehicle information display. For additional information, see "LDW system operation" (P. 305).

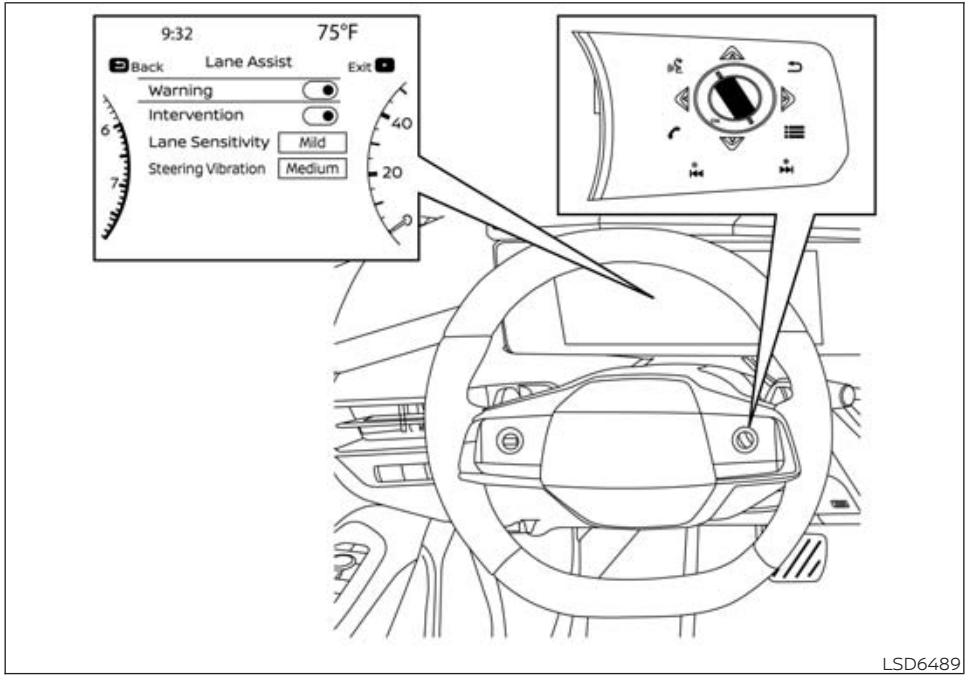

HOW TO ENABLE/DISABLE THE LDW SYSTEM

Perform the following steps to enable or disable the LDW system.

1. Press the ◀ ▶ button until "Settings" displays in the vehicle information display and then press the OK button. Use the scroll dial to select "Driver Assistance." Then press the OK button.
2. Select "Lane Assist" and press the OK button.
3. Select "Warning" and press the OK button to turn the system on or off.

NOTE:

When enabling/disabling the system, the system will retain current settings even if the engine is restarted.

LDW SYSTEM LIMITATIONS

⚠ WARNING

Listed below are the system limitations for the LDW system. Failure to follow the warnings and instructions for proper use of the LDW system could result in serious injury or death.

- **The system will not operate at speeds below approximately 37 mph (60 km/h) or if it cannot detect lane markers.**
- **Do not use the LDW system under the following conditions as it may not function properly:**
  - **During bad weather (rain, fog, snow, etc.).**
  - **When driving on slippery roads, such as on ice or snow.**
  - **When driving on winding or uneven roads.**
  - **When there is a lane closure due to road repairs.**
  - **When driving in a makeshift or temporary lane.**
  - **When driving on roads where the lane width is too narrow.**
  - **When driving without normal tire conditions (for example, tire wear, low tire pressure, installation of spare tire, tire chains, nonstandard wheels).**
  - **When the vehicle is equipped with non-original brake parts or suspension parts.**
  - **When you are towing a trailer or other vehicle.**
- **The system may not function properly under the following conditions:**
  - **On roads where there are multiple parallel lane markers; lane markers that are faded or not painted clearly; yellow painted lane markers; non-standard lane markers; or lane markers covered with water, dirt, snow, etc.**
  - **On roads where the discontinued lane markers are still detectable.**
  - **On roads where there are sharp curves.**
  - **On roads where there are sharply contrasting objects, such as shadows, snow, water, wheel ruts, seams or lines remaining after road repairs. (The LDW system could detect these items as lane markers.)**
  - **On roads where the traveling lane merges or separates.**
  - **When the vehicle's traveling direction does not align with the lane marker.**
  - **When traveling close to the vehicle in front of you, which obstructs the lane camera unit detection range.**
  - **When rain, snow, dirt or an object adheres to the windshield in front of the lane camera unit.**
  - **When the headlights are not bright due to dirt on the lens or if the aiming is not adjusted properly.**
  - **When strong light enters the lane camera unit. (For example, the light directly shines on the front of the vehicle at sunrise or sunset.)**
  - **When a sudden change in brightness occurs. (For example, when the vehicle enters or exits a tunnel or under a bridge.)**
- **Steering wheel vibration may not be felt depending on the road surface conditions.**

SYSTEM TEMPORARILY UNAVAILABLE

If the vehicle is parked in direct sunlight under high temperature conditions (over approximately 104°F [40°C]) and then started, the LDW system may be deactivated automatically and the following message will appear in the vehicle information display: "Unavailable Camera Temperature High".

When the interior temperature is reduced, the LDW system will resume operating automatically.

The LDW system is not designed to warn under the following conditions:

- When you operate the lane change signal and change traveling lanes in the direction of the signal. (The LDW system will become operable again approximately 2 seconds after the lane change signal is turned off.)
- When the vehicle speed lowers to less than approximately 37 mph (60 km/h).

After the above conditions have finished and the necessary operating conditions are satisfied, the LDW functions will resume.

SYSTEM MALFUNCTION

If the LDW system malfunctions, it will cancel automatically and the "Malfunction See Owner's Manual" warning message will appear in the vehicle information display. If the "Malfunction See Owner's Manual" warning message appears in the vehicle information display, pull off the road to a safe location and stop the vehicle. Place the shift position in the P (Park) position and the ignition switch in the OFF position and restart the engine/motor. If the "Malfunction See Owner's Manual" warning message continues to appears in the vehicle information display, have the system checked. It is recommended that you visit a NISSAN dealer for this service.

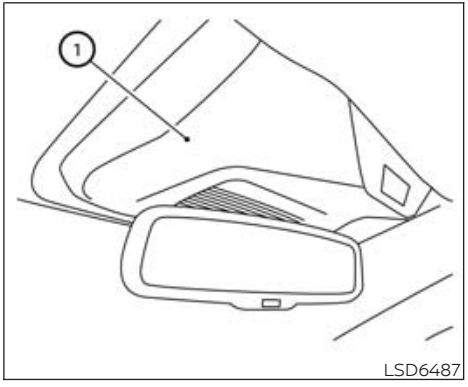

SYSTEM MAINTENANCE

The lane camera unit ① for the LDW system is located above the inside mirror. To keep the proper operation of the LDW system and prevent a system malfunction, be sure to observe the following:

- Always keep the windshield clean.
- Do not attach a sticker (including transparent material) or install an accessory near the camera unit.

- Do not place reflective materials, such as white paper or a mirror, on the instrument panel. The reflection of sunlight may adversely affect the camera unit's capability of detecting the lane markers.
- Do not strike or damage the areas around the camera unit. Do not touch the camera lens or remove the screw located on the camera unit. If the camera unit is damaged due to an accident, it is recommended that you visit a NISSAN dealer.

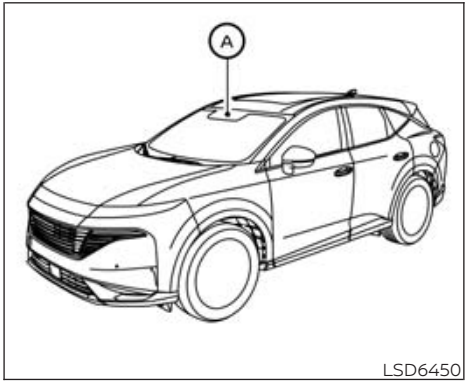

LSD6450

BASIC INFORMATION

⚠WARNING

Failure to follow the warnings and instructions for proper use of the I-LI system could result in serious injury or death.

- **The I-LI system will not steer the vehicle or prevent loss of control. It is the driver's responsibility to stay alert, drive safely, keep the vehicle in the traveling lane, and be in control of the vehicle at all times.**
- **The I-LI system is primarily intended for use on well-developed freeways or highways. It may not detect the lane markers in certain road, weather, or driving conditions.**

The I-LI system can be turned on with the ProPILOT Assist switch on the steering wheel, when the engine is started.

The I-LI system will operate when the vehicle is driven at speeds of approximately 37 mph (60 km/h) and above, and only when the lane markings and road edge are clearly visible on the road.

The I-LI system warns the driver when the vehicle has left the center of the traveling lane with an indicator and a steering wheel vibration. The system helps assist the driver to return the vehicle to the center of the traveling lane by applying the steering to the left or right (for a short period of time).

The I-LI system monitors the lane markers on the traveling lane using the camera unit Ⓐ located above the inside mirror.

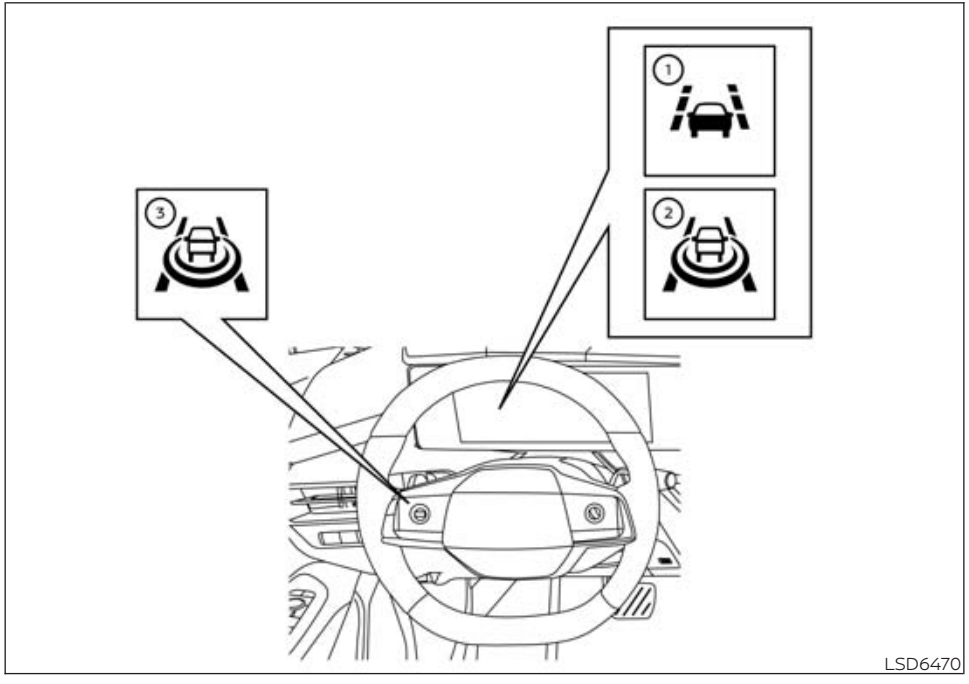

I-LI SYSTEM OPERATION

① Lane Departure Warning (LDW) indicator

② Intelligent Lane Intervention (I-LI) indicator

③ ProPILOT Assist switch

The I-LI system operates above approximately 37 mph (60 km/h). When the vehicle approaches either the left or the right side of the traveling lane, the steering wheel will vibrate and the LDW indicator ① (orange) on the instrument panel will blink to alert the driver. The system helps assist the driver to return the vehicle to the center of the traveling lane by applying the steering to the left or right (for a short period of time).

To turn on the I-LI system, push the ProPILOT Assist switch ② after starting the engine/motor. The I—LI indicator on the instrument panel will illuminate. Push the ProPILOT Assist switch again to turn off the I-LI system. The I—LI indicator will turn off.

The strength of the steering wheel vibration can be changed in the settings menu of the vehicle information display. For additional information, see "LDW system operation" (P. 305).

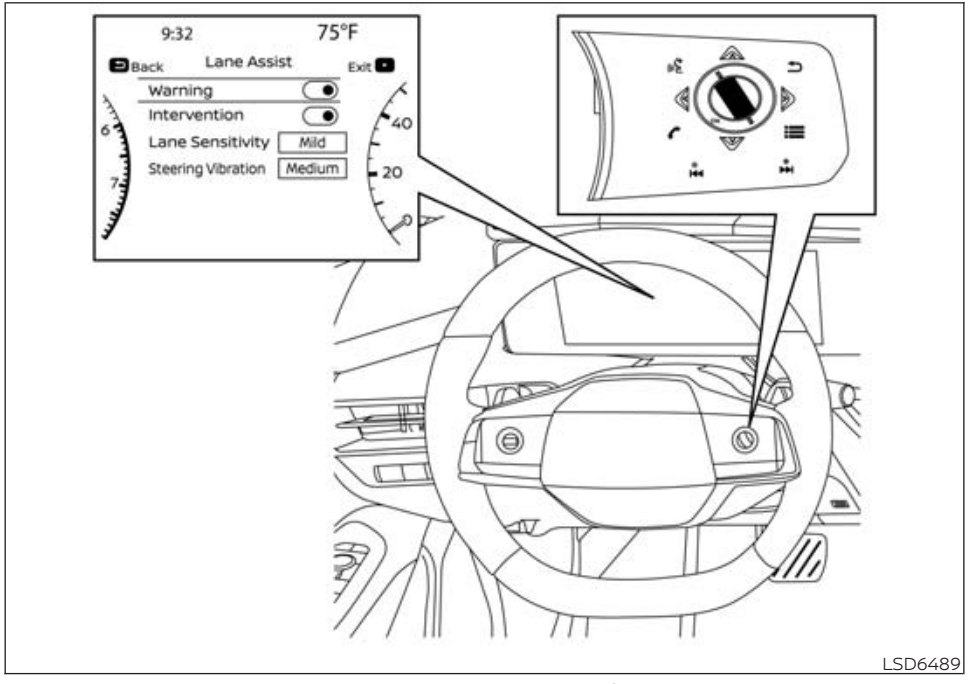

HOW TO ENABLE/DISABLE THE I-LI SYSTEM

Basic Information

Perform the following steps to enable or disable the I-LI system.

1. Press the ◀ ▶ button until "Settings" displays in the vehicle information display and then press the OK button. Use the ▲▼ button to select "Driver Assistance." Then press the OK button.
2. Select "Lane Assist" and press the OK button.
3. Select "Intervention" and press the OK button to turn the system on or off.
4. Push the ProPILOT Assist switch to turn the system on or off.

NOTE:

- **Turning on the ProPILOT Assist system will turn on the I-LI and I-BSI systems at the same time. If the I-LI system is disabled in the settings menu, the I-LI will automatically be turned on when the Steering Assist system is active. For additional information, see "ProPILOT Assist Systems" (P. 344).**
- **When enabling/disabling the system, the system will retain current setting even if the engine is restarted.**

Setting lane sensitivity

You can set lane sensitivity using the "Settings" menu in the vehicle information display.

1. Press the ◀ ▶ button until "Settings" displays in the vehicle information display. Use the scroll dial to select "Driver Assistance." Then press the OK button.
2. Select "Lane Assist" and press the OK button.
3. Select "Lane Sensitivity" and to change the sensitivity to "Strong", "Normal" or "Mild".

NOTE:

The sensitivity setting will be retained even if the engine is restarted.

I-LI SYSTEM LIMITATIONS

⚠WARNING

Listed below are the system limitations for the I-LI system. Failure to follow the warnings and instructions for proper use of the I-LI system could result in serious injury or death.

- **The I-LI system may activate if you change lanes without first activating your turn signal or, for example, if a construction zone directs traffic to cross an existing lane marker. If this occurs you may need to apply corrective steering to complete your lane change.**
- **Because the I-LI may not activate under the road, weather, and lane marker conditions described in this section, it may not activate every time your vehicle begins to leave its lane and you will need to apply corrective steering.**
- **When the I-LI system is operating, avoid excessive or sudden steering maneuvers. Otherwise, you could lose control of the vehicle.**
- **The I-LI system will not operate at speeds below approximately 37 mph (60 km/h) or if it cannot detect lane markers.**
- **Do not use the I-LI system under the following conditions as it may not function properly:**
  - **During bad weather (rain, fog, snow, etc.).**
  - **When driving on slippery roads, such as on ice or snow.**
  - **When driving on winding or uneven roads.**
  - **When there is a lane closure due to road repairs.**
  - **When driving in a makeshift or temporary lane.**
  - **When driving on roads where the lane width is too narrow.**
  - **When driving without normal tire conditions (for example, tire wear, low tire pressure, installation of spare tire, tire chains, non-standard wheels).**
  - **When the vehicle is equipped with non-original brake parts, steering parts or suspension parts.**

- **When you are towing a trailer or other vehicle.**
- **On roads where there are multiple parallel lane markers; lane markers that are faded or not painted clearly; yellow painted lane markers; non-standard lane markers; or lane markers covered with water, dirt, snow, etc.**
- **On roads where the edge of the road is not clearly visible.**
- **On roads where discontinued lane markers are still detectable.**
- **On roads where there are sharp curves.**
- **On roads where there are sharply contrasting objects, such as shadows, snow, water, wheel ruts, seams or lines remaining after road repairs. (The I-LI system could detect these items as lane markers.)**
- **On roads where the traveling lane merges or separates.**
- **When the vehicle's traveling direction does not align with the lane marker.**
- **When traveling close to the vehicle in front of you, which obstructs the lane camera unit detection range.**
- **When rain, snow or dirt adheres to the windshield in front of the lane camera unit.**
- **When the headlights are not bright due to dirt on the lens or if the aiming is not adjusted properly.**
- **When strong light enters the lane camera unit. (For example, the light directly shines on the front of the vehicle at sunrise or sunset.)**
- **When a sudden change in brightness occurs. (For example, when the vehicle enters or exits a tunnel or under a bridge.)**

- **Steering wheel vibration may not be felt depending on the road surface conditions.**

While the I-LI system is operating, you may hear a sound of brake operation. This is normal and indicates that the I-LI system is operating properly.

SYSTEM TEMPORARILY UNAVAILABLE

Condition A:

The warning and assist functions of the I-LI system are not designed to work under the following conditions:

- When you operate the lane change signal and change the traveling lanes in the direction of the signal. (The I-LI system will be deactivated for approximately 2 seconds after the lane change signal is turned off.)
- When the vehicle speed lowers to less than approximately 37 mph (60 km/h).

After the above conditions have finished and the necessary operating conditions are satisfied, the warning and assist functions will resume.

Condition B:

The assist function of the I-LI system is not designed to work under the following conditions (warning is still functional):

- When the brake pedal is depressed.
- When the steering wheel is turned as far as necessary for the vehicle to change lanes.

- When the vehicle is accelerated during I-LI system operation.
- When the Intelligent Cruise Control (ICC) approach warning occurs.
- When the hazard warning flashers are operated.
- When driving on a curve at high speed.

After the above conditions have finished and the necessary operating conditions are satisfied, the I-LI system application of the brakes will resume.

Condition C:

If the following messages appear in the vehicle information display, a chime will sound and the I-LI system will be turned off automatically.

- "Unavailable Slippery Road":
  When the VDC system (except Traction Control System [TCS] function) or ABS operates.
- "Currently Unavailable":
  When the VDC system is turned off.

Action to take:

When the above conditions no longer exist, turn off the I-LI system. Push the ProPILOT Assist switch again to turn the I-LI system back on.

Temporary disabled status at high temperature:

If the vehicle is parked in direct sunlight under high temperature conditions (over approximately 104°F [40°C]) and then the I-LI system is turned on, the I-LI system may be deactivated automatically, a chime will sound and the following message will appear on the vehicle information display: "Unavailable Camera Temperature High." When the interior temperature is reduced, turn off the I-LI system. Push the ProPILOT Assist switch again to turn the system back on.

SYSTEM MALFUNCTION

If the I-LI system malfunctions, it will cancel automatically. The LDW indicator (orange) will illuminate in the display, a chime will sound and the "Malfunction See Owner's Manual" warning message will display. If the LDW indicator (orange) illuminates in the display, a chime sounds and the "Malfunction See Owner's Manual" warning message appears in the vehicle information display, pull off the road to a safe location and stop the vehicle. Place the shift position in the P (Park) position and the ignition switch in the OFF position and restart the engine/motor. If the LDW indicator (orange) continues to illuminate, have the I-LI system checked. It is recommended that you visit a NISSAN dealer for this service.

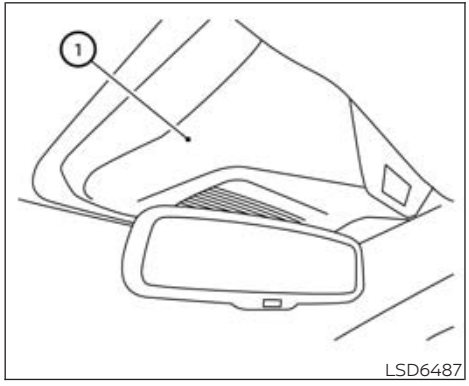

LSD6487

SYSTEM MAINTENANCE

The lane camera unit ① for the I-LI system is located above the inside mirror. To keep the proper operation of the I-LI system and prevent a system malfunction, be sure to observe the following:

- Always keep the windshield clean.
- Do not attach a sticker (including transparent material) or install an accessory near the camera unit.
- Do not place reflective materials, such as white paper or a mirror, on the instrument panel. The reflection of sunlight may adversely affect the camera unit's capability of detecting the lane markers.
- Do not strike or damage the areas around the camera unit. Do not touch the camera lens or remove the screw located on the camera unit. If the camera unit is damaged due to an accident, it is recommended that you visit a NISSAN dealer.

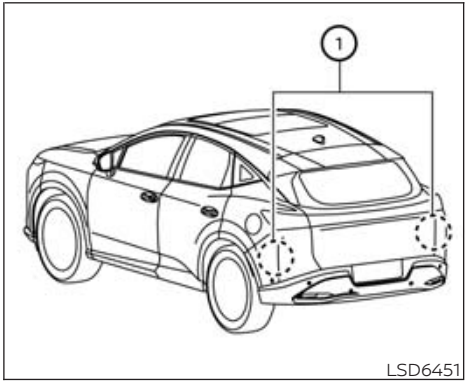

LSD6451

BASIC INFORMATION

⚠WARNING

Failure to follow the warnings and instructions for proper use of the BSW system could result in serious injury or death.

- **The BSW system is not a replacement for proper driving procedures and is not designed to prevent contact with vehicles or objects. When changing lanes, always use the side and rear**

mirrors and turn and look in the direction your vehicle will move to ensure it is safe to change lanes. Never rely solely on the BSW system.

The BSW system helps alert the driver of other vehicles in adjacent lanes when changing lanes.

The BSW system uses radar sensors ① installed near the rear bumper to detect other vehicles in an adjacent lane.

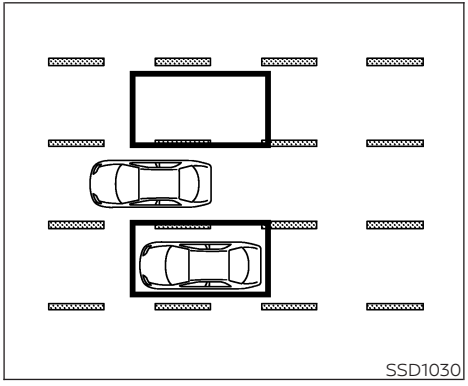

Detection zone

The radar sensors can detect vehicles on either side of your vehicle within the detection zone shown as illustrated. This detection zone starts from the outside mirror of your vehicle and extends approximately 10 ft (3.0 m) behind the rear bumper, and approximately 10 ft (3.0 m) sideways.

The detection zone extends if the vehicle in an adjacent lane is approaching from behind at high speed,

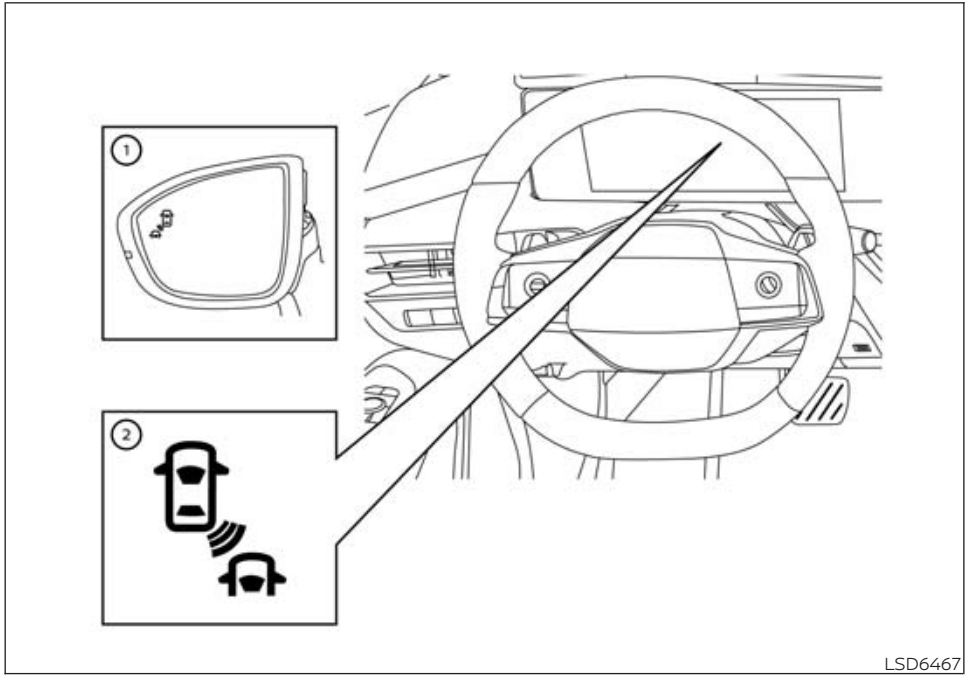

BSW SYSTEM OPERATION

① Side BSW/RCTA indicator light

② BSW Indicator

The BSW system operates above approximately 20 mph (32 km/h).

If the radar sensors detect a vehicle in the detection zone, the side BSW/RCTA indicator light ① illuminates. If the turn signal is then activated, the system chimes (twice) and the side BSW/RCTA indicator light flashes and the BSW indicator flashes (yellow) in the vehicle information display. The side BSW/RCTA indicator light continues to flash until the detected vehicle leaves the detection zone.

The side BSW/RCTA indicator light illuminates for a few seconds when the ignition switch is placed in the ON position.

The brightness of the side BSW/RCTA indicator light is adjusted automatically depending on the brightness of the ambient light.

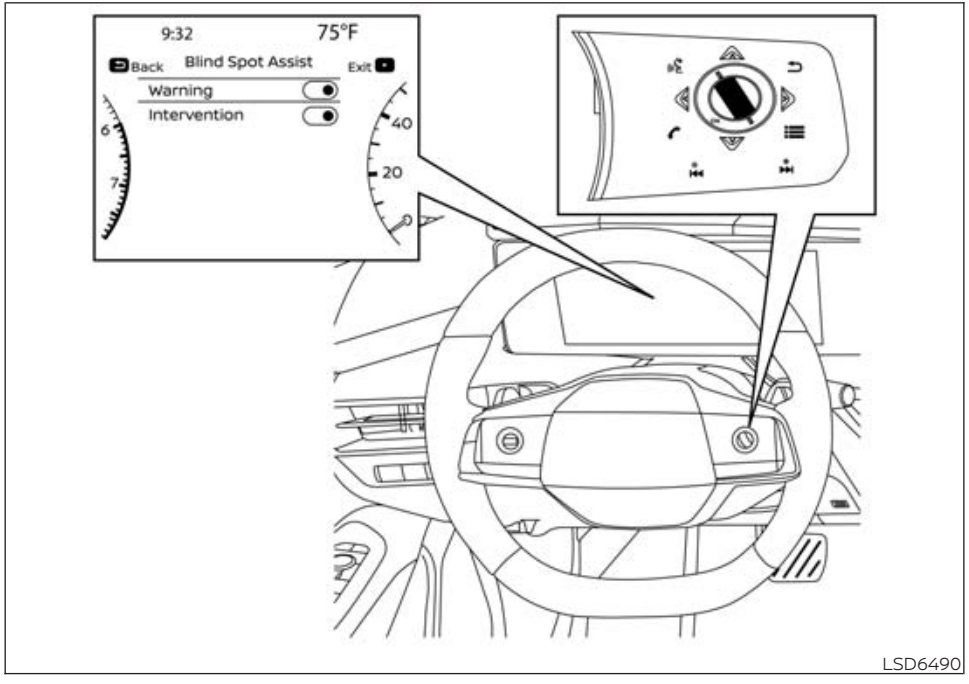

HOW TO ENABLE/DISABLE THE BSW SYSTEM

Perform the following steps to enable or disable the BSW system.

1. Press the ◀ ▶ button until "Settings" displays in the vehicle information display and then press the OK button. Use the scroll dial to select "Driver Assistance." Then press the OK button.
2. Select "Blind Spot Assist" and press the OK button.
3. Select "Warning" and press the OK button to turn the system on or off.

NOTE:

- **When enabling/disabling the system, the system will retain current settings even if the engine is restarted.**

BSW SYSTEM LIMITATIONS

⚠ WARNING

Listed below are the system limitations for the BSW system. Failure to operate the vehicle in accordance with these system limitations could result in serious injury or death.

- **The BSW system cannot detect all vehicles under all conditions.**
- **The radar sensors may not be able to detect and activate BSW when certain objects are present such as:**
  - **Pedestrian, bicycles, animals.**
  - **Vehicles such as motorcycles, low height vehicles, or high ground clearance vehicles.**
  - **Oncoming vehicles.**
  - **Vehicles remaining in the detection zone when you accelerate from a stop.**
  - **A vehicle merging into an adjacent lane at a speed approximately the same as your vehicle.**
  - **A vehicle approaching rapidly from behind.**
  - **A vehicle which your vehicle overtakes rapidly.**
  - **A vehicle that passes through the detection zone quickly.**
  - **When overtaking several vehicles in a row, the vehicles after the first vehicle may not be detected if they are traveling close together.**
- **The radar sensor's detection zone is designed based on a standard lane width. When driving in a wider lane, the radar sensors may not detect vehicles in an adjacent lane. When driving in a narrow lane, the radar sensors may detect vehicles driving two lanes away.**
- **The radar sensors are designed to ignore most stationary objects; however, objects such as guardrails, walls, foliage and parked vehicles may occasionally be detected. This is a normal operation condition.**
- **The following conditions may reduce the ability of the radar to detect other vehicles:**
  - **Severe weather**
  - **Road spray**
  - **Ice/frost/snow/dirt build-up on the vehicle**
- **Do not attach stickers (including transparent material), install accessories or apply additional paint near the radar sensors. These conditions may reduce the ability of the radar to detect other vehicles.**
- **Excessive noise (for example, audio system volume, open vehicle window) will interfere with the chime sound, and it may not be heard.**

BSW DRIVING SITUATIONS

Basic Information

Indicator on

Indicator off

Indicator flashing

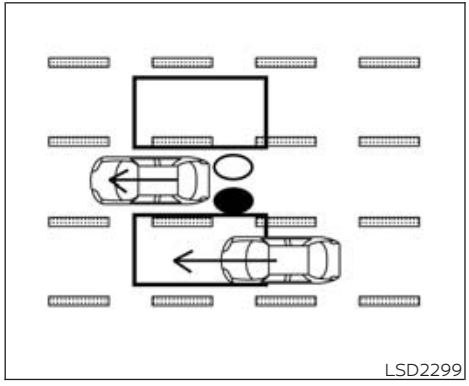

Illustration 1 – Approaching from behind

Another vehicle approaching from behind

Illustration 1: The side BSW/RCTA indicator light illuminates if a vehicle enters the detection zone from behind in an adjacent lane.

NOTE:

- **The radar sensors may not detect vehicles which are approaching rapidly from behind.**

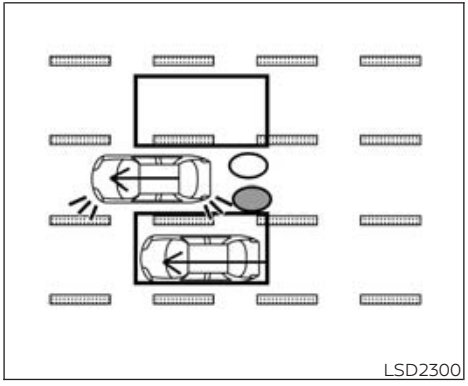

Illustration 2 – Approaching from behind

Illustration 2: If the driver activates the turn signal when another vehicle is in the detection zone, then the system chimes (twice) and the side BSW/RCTA indicator light and the BSW indicator flash.

NOTE:

- **The radar sensors may not detect vehicles which are approaching rapidly from behind.**
- **If the driver activates the turn signal before a vehicle enters the detection zone, the side BSW/RCTA indicator light and the BSW indicator will flash but no chime will sound when the other vehicle is detected.**

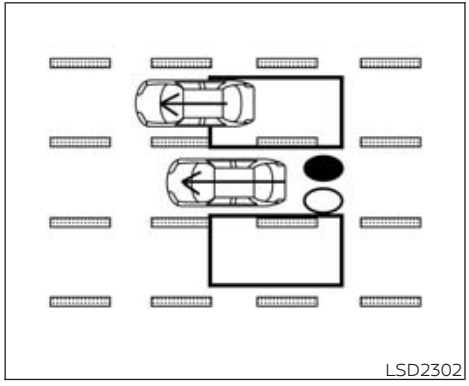

Illustration 3 – Overtaking another vehicle

Overtaking another vehicle

Illustration 3: The side BSW/RCTA indicator light illuminates if you overtake a vehicle and that vehicle stays in the detection zone for approximately 2 seconds.

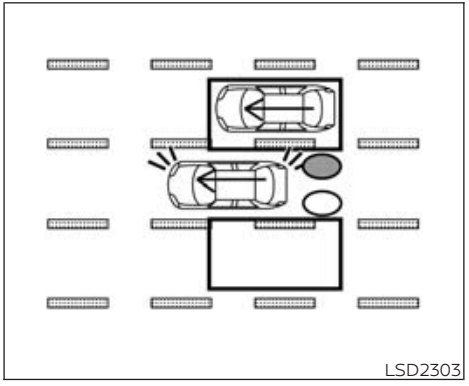

Illustration 4 – Overtaking another vehicle

Illustration 4: If the driver activates the turn signal while another vehicle is in the detection zone, then the system chimes (twice) and the side BSW/RCTA indicator light and the BSW indicator flash.

NOTE:

- **When overtaking several vehicles in a row, the vehicles after the first vehicle may not be detected if they are traveling close together.**
- **The radar sensors may not detect slower moving vehicles if they are passed quickly.**
- **If the driver activates the turn signal before a vehicle enters the detection zone, the side BSW/RCTA indicator light and the BSW indicator will flash but no chime will sound when the other vehicle is detected.**

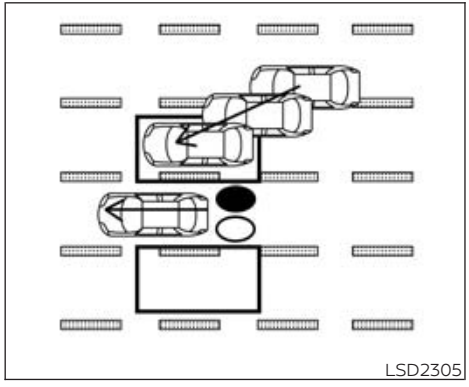

Illustration 5 – Entering from the side

Entering from the side

Illustration 5: The side BSW/RCTA indicator light illuminates if a vehicle enters the detection zone from either side.

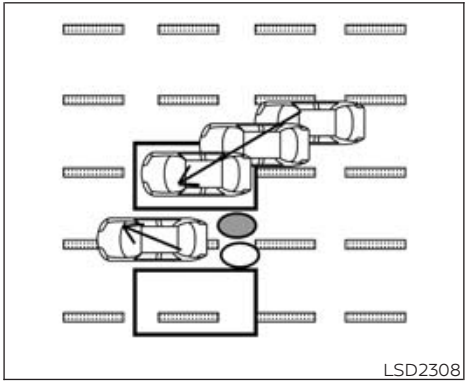

Illustration 6 – Entering from the side

Illustration 6: If the driver activates the turn signal while another vehicle is in the detection zone, then the system chimes (twice) and the side BSW/RCTA indicator light and the BSW indicator flash.

NOTE:

- **If the driver activates the turn signal before a vehicle enters the detection zone, the side BSW/RCTA indicator light and the BSW indicator will flash but no chime will sound when the other vehicle is detected.**
- **The radar sensors may not detect a vehicle which is traveling at about the same speed as your vehicle when it enters the detection zone.**

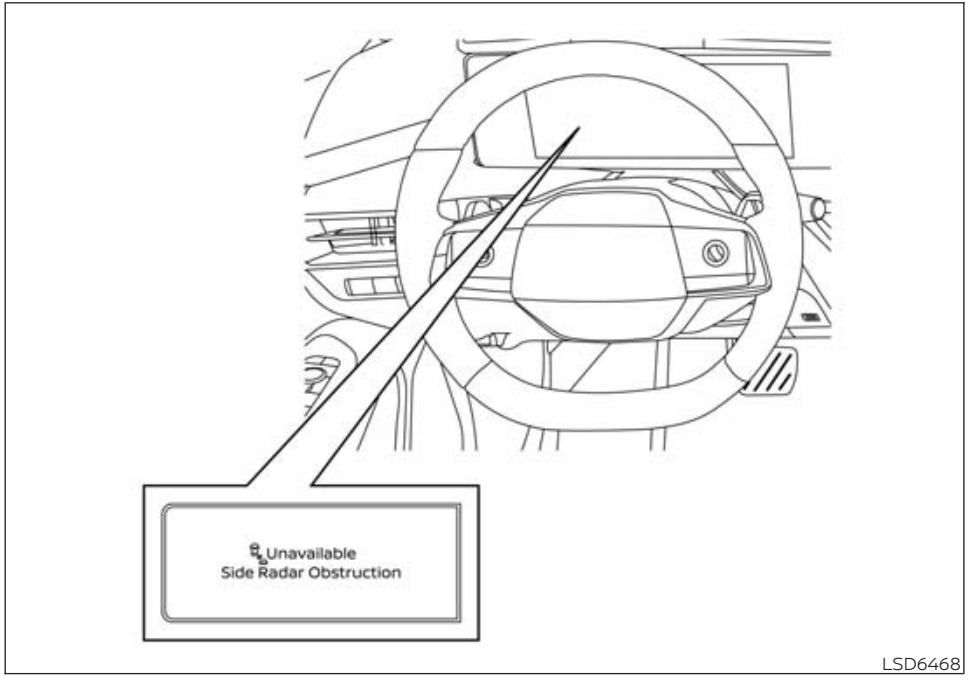

SYSTEM TEMPORARILY UNAVAILABLE

Basic Information

When radar blockage is detected, the system will be deactivated automatically.

The "Unavailable: Side Radar Obstruction" warning message will appear in the vehicle information display.

The system is not available until the conditions no longer exist.

The radar sensors may be blocked by temporary ambient conditions such as splashing water, mist or fog. The blocked condition may also be caused by objects such as ice, frost or dirt obstructing the radar sensors.

NOTE:

If the BSW system stops working, the RCTA and I-BSI systems will also stop working.

Action to take:

When the above conditions no longer exist, the system will resume automatically.

Malfunction

If the BSW system malfunctions, it will turn off automatically. The BSW indicator will appear in the vehicle information display.

NOTE:

If the BSW system stops working, the RCTA and I-BSI systems will also stop working.

Action to take:

Stop the vehicle in a safe location, place the vehicle in the P (Park) position, turn the engine off and restart the engine. If the message continues to appear, have the system checked. It is recommended that you visit a NISSAN dealer for this service.

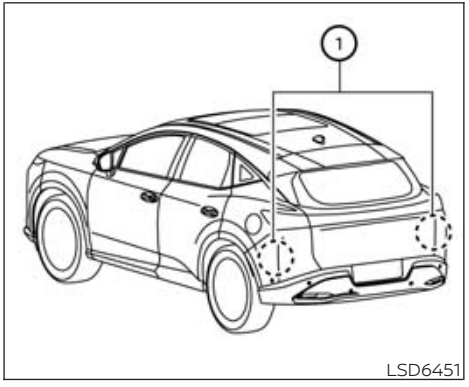

SYSTEM MAINTENANCE

Basic Information

The two radar sensors ① for the BSW and RCTA systems are located near the rear bumper. Always keep the area near the radar sensors clean.

The radar sensors may be blocked by temporary ambient conditions such as splashing water, mist or fog.

The blocked condition may also be caused by objects such as ice, frost or dirt obstructing the radar sensors.

Check for and remove objects obstructing the area around the radar sensors.

Do not attach stickers (including transparent material), install accessories or apply additional paint near the radar sensors.

Do not strike or damage the area around the radar sensors. It is recommended that you visit a NISSAN dealer if the area around the radar sensors is damaged due to a collision.

Radio frequency statement

For USA

This device complies with Part 15 of the FCC Rules.

Operation is subject to the following two conditions:

1. This device may not cause harmful interference, and
2. This device must accept any interference received, including interference that may cause undesired operation.

FCC Warning

Changes or modifications not expressly approved by the party responsible for compliance could void the user's authority to operate the equipment.

For Canada

This device contains licence-exempt transmitter(s)/receiver(s) that comply with Innovation, Science and Economic Development Canada's licence-exempt RSS(s). Operation is subject to the following two conditions:

1. This device may not cause interference.
2. This device must accept any interference, including interference that may cause undesired operation of the device.

Radiofrequency radiation exposure information:

This equipment complies with radiation exposure limits set forth for an uncontrolled environment. This equipment should be installed and operated with minimum distance of 20 cm between the radiator and the body of any persons, user or bystander.

INTELLIGENT BLIND SPOT INTERVENTION (I-BSI)

BASIC INFORMATION

⚠WARNING

Failure to follow the warnings and instructions for proper use of the I-BSI system could result in serious injury or death.

- **The I-BSI system is not a replacement for proper driving procedure and is not designed to prevent contact with vehicles or objects. When changing lanes, always use the side and rear mirrors and turn and look in the direction you will move to ensure it is safe to change lanes. Never rely solely on the I-BSI system.**
- **There is a limitation to the detection capability of the radar or the sonar. Not every moving object or vehicle will be detected. Using the I-BSI system under some road, ground, lane marker, traffic or weather conditions could lead to improper system operation. Always rely on your own operation to avoid accidents.**

The I-BSI system helps alert the driver of other vehicles in adjacent lanes when changing lanes, and helps assist the driver to return the vehicle to the center of the traveling lane.

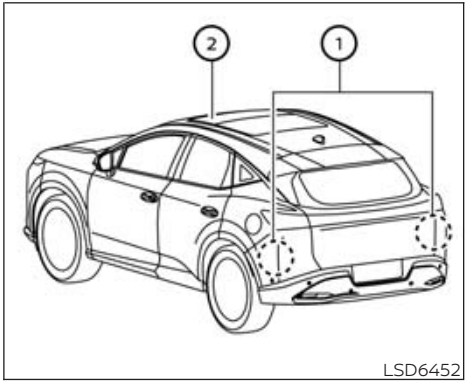

The I-BSI system uses radar sensors ① installed near the rear bumper to detect other vehicles in an adjacent lane. In addition to the radar sensors, the I-BSI system uses a camera ② installed behind the windshield to monitor the lane markers of your traveling lane.

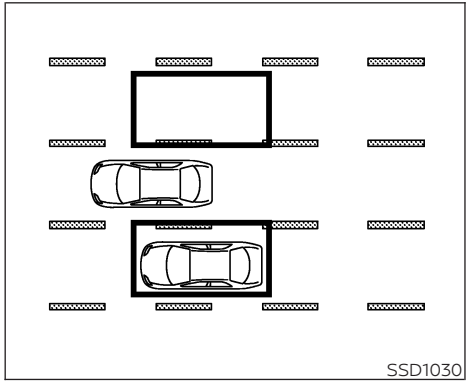

Detection zone

The radar sensors can detect vehicles on either side of your vehicle within the detection zone shown as illustrated.

The detection zone starts from the outside mirror of your vehicle and extends approximately 10ft (3.0m) behind the rear bumper, and approximately 10ft (3.0 m) sideways.

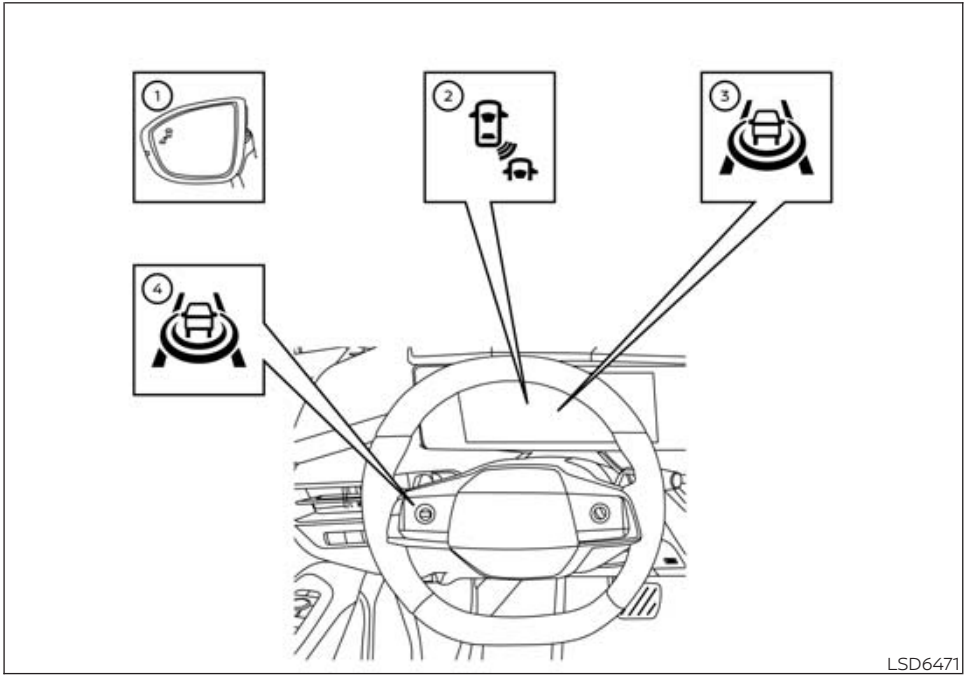

I-BSI SYSTEM OPERATION

① Side BSW/RCTA indicator light

② BSW indicator

③ Intelligent Blind Spot Intervention (I-BSI) indicator

④ ProPILOT Assist switch

The I-BSI system operates above approximately 37 mph (60 km/h).

If the radar sensors detect a vehicle in the detection zone, the side BSW/RCTA indicator light ① illuminates.

If the turn signal is then activated, the system chimes (twice) and the side BSW/RCTA indicator light and the BSW indicator light ② flash. The side BSW/RCTA indicator light continues to flash until the detected vehicle leaves the detection zone. The brightness of the side indicator light is adjusted automatically depending on the brightness of the ambient light.

If the I-BSI system is ON and your vehicle approaches a lane marker while another vehicle is in the detection zone, the system chimes (three times) and the side BSW/RCTA indicator light and the BSW indicator light ② flash. The system helps assist the driver to return the vehicle to the center of the traveling lane by applying the steering to the left or right (for a short period of time). The I-BSI system operates regardless of turn signal usage.

NOTE:

- **I-BSI warning and system application will only be activated if the side BSW/RCTA indicator light is already illuminated when your vehicle approaches a lane marker. If another vehicle comes into the detection zone after your vehicle has crossed a lane marker, no I-BSI warning or system application will be activated. For additional information, see "I-BSI driving situations" (P. 330).**
- **The I-BSI system is typically activated prior to the Intelligent Lane Intervention (I-LI) system when your vehicle is approaching a lane marker.**

To turn on the I-BSI system, push the ProPILOT Assist switch on the steering wheel after starting the engine. The I-BSI indicator will illuminate. Push the ProPILOT Assist switch again to turn off the I-BSI system. The I-BSI indicator will turn off.

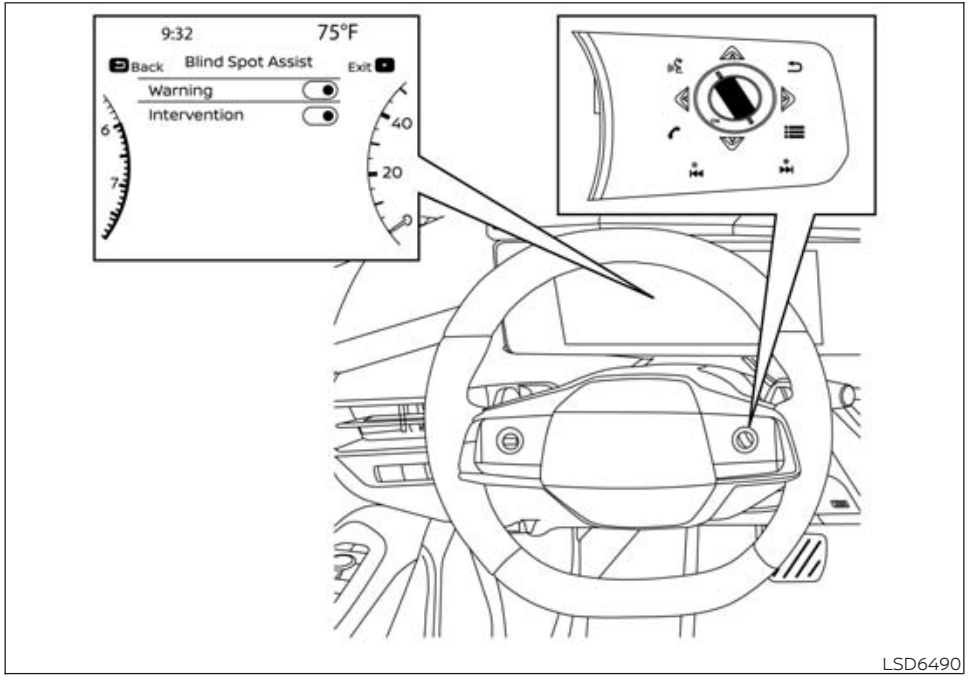

HOW TO ENABLE/DISABLE THE I-BSI SYSTEM

Perform the following steps to enable or disable the I-BSI system:

1. Press the ◀ ▶ button until "Settings" displays in the vehicle information display. Use the scroll dial to select "Driver Assistance." Then press the OK button.
2. Select "Blind Spot Assist" and press the OK button.
3. Select "Intervention" and use the OK button to turn the system on or off.
4. Push the ProPILOT Assist switch to turn the system on or off.

NOTE:

- **Turning on the ProPILOT Assist system will turn on the I-BSI and I-LI system at the same time. For additional information, see "Intelligent Lane Intervention (I-LI)" (P. 309).Turning the I-BSI system on will activate the BSW system at the same time.**
- **When enabling/disabling the system, the system will retain current settings even if the engine is restarted.**

I-BSI SYSTEM LIMITATIONS

⚠ WARNING

Listed below are the system limitations for the I-BSI system. Failure to operate the vehicle in accordance with these system limitations could result in serious injury or death.

- **The I-BSI system cannot detect all vehicles under all conditions.**
- **The radar sensors may not be able to detect and activate I-BSI when certain objects are present such as:**
  - **Pedestrians, bicycles, or animals.**
  - **Vehicles such as motorcycles, low height vehicles, or high ground clearance vehicles.**
  - **Vehicles remaining in the detection zone when you accelerate from a stop. For additional information, see "I-BSI driving situations" (P. 330).**
  - **Oncoming vehicles.**
  - **A vehicle merging into an adjacent lane at a speed approximately the same as your vehicle.**
  - **A vehicle approaching rapidly from behind.**
  - **A vehicle which your vehicle overtakes rapidly.**
  - **A vehicle that passes through the detection zone quickly.**
- **The radar sensors' detection zone is designed based on a standard lane width. When driving in a wider lane, the radar sensors may not detect vehicles in an adjacent lane. When driving in a narrow lane, the radar sensors may detect vehicles driving two lanes away.**
- **The radar sensors are designed to ignore most stationary objects; however, objects such as guardrails, walls, foliage and parked vehicles may occasionally be detected. This is a normal operation condition.**
- **The following conditions may reduce the ability of the radar to detect other vehicles:**
  - **Severe weather**
  - **Road spray**
  - **Ice/frost/dirt build-up on the vehicle**
- **Do not attach stickers (including transparent material), install accessories or apply additional paint near the radar sensors. These conditions may reduce the ability of the radar to detect other vehicles.**
- **The camera may not detect lane markers in the following situations and the I-BSI system may not operate properly.**
  - **On roads where there are multiple parallel lane markers; lane markers that are faded or not painted clearly; yellow painted lane markers; non-standard lane markers; lane markers covered with water, dirt, snow, etc.**
  - **On roads where discontinued lane markers are still detectable.**
  - **On roads where there are sharp curves.**
  - **On roads where there are sharply contrasting objects, such as shadows, snow, water, wheel ruts, seams or lines remaining after road repairs.**
  - **On roads where the traveling lane merges or separates.**
  - **When the vehicle's traveling direction does not align with the lane markers.**

- **When traveling close to the vehicle in front of you, which obstructs the lane camera unit detection range.**
- **When rain, snow or dirt adheres to the windshield in front of a lane camera unit.**
- **When the headlights are not bright due to dirt on the lens or if aiming is not adjusted properly.**
- **When strong light enters a lane camera unit. (For example: light directly shines on the front of the vehicle at sunrise or sunset.)**
- **When a sudden change in brightness occurs. (For example: when the vehicle enters or exits a tunnel or under a bridge.)**

· **Do not use the I-BSI system under the following conditions because the system may not function properly.**
- **During bad weather (for example: rain, fog, snow, etc.).**
- **When driving on slippery roads, such as on ice or snow, etc.**
- **When driving on winding or uneven roads.**
- **When there is a lane closure due to road repairs.**
- **When driving in a makeshift or temporary lane.**
- **When driving on roads where the lane width is too narrow.**
- **When driving with a tire that is not within normal tire conditions (e.g., tire wear, low tire pressure, installation of spare tire, tire chains, nonstandard wheels).**
- **When the vehicle is equipped with non-original brake parts or suspension parts.**

· **Excessive noise (e.g., audio system volume, open vehicle window) will interfere with the chime sound, and it may not be heard.**

I-BSI DRIVING SITUATIONS

Basic information

Indicator on

Indicator off

Indicator flashing

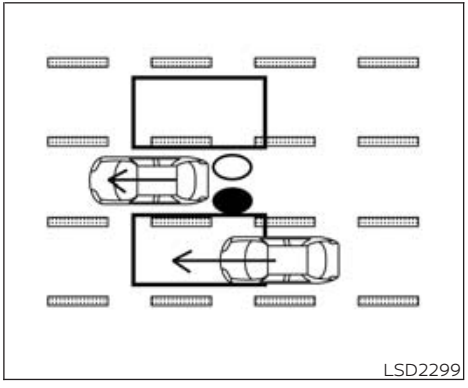

Illustration 1 – Approaching from behind

Another vehicle approaching from behind

Illustration 1: The side BSW/RCTA indicator light illuminates if a vehicle enters the detection zone from behind in an adjacent lane.

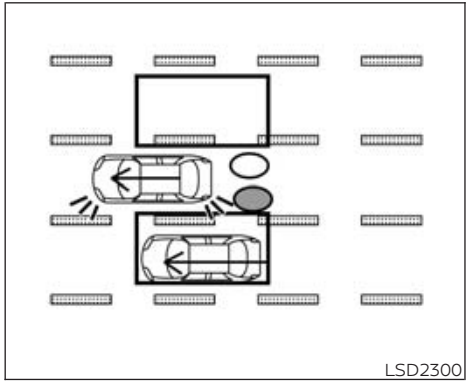

Illustration 2 – Approaching from behind

Illustration 2: If the driver activates the turn signal then the system chimes a sound (twice) and the side BSW/RCTA indicator light and the BSW indicator flash.

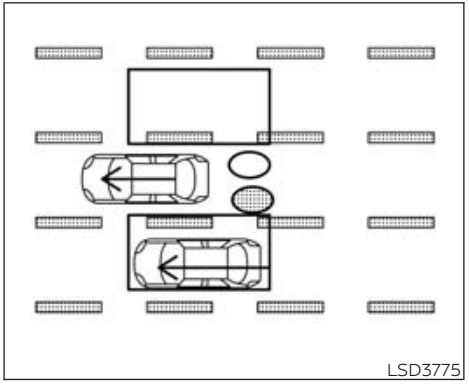

Illustration 3 – Approaching from behind

Illustration 3: If the I-BSI system is on and your vehicle approaches a lane marker while another vehicle is in the detection zone, the system chimes (three times) and the side BSW/RCTA indicator light and the BSW indicator flash. Then the I-BSI system activates to help return the vehicle back to the center of the driving lane.

NOTE:

- **The radar sensors may not detect vehicles which are approaching rapidly from behind.**
- **If the driver activates the turn signal before a vehicle enters the detection zone, the side BSW/RCTA indicator light and the BSW indicator will flash but no chime will sound when the other vehicle is detected.**

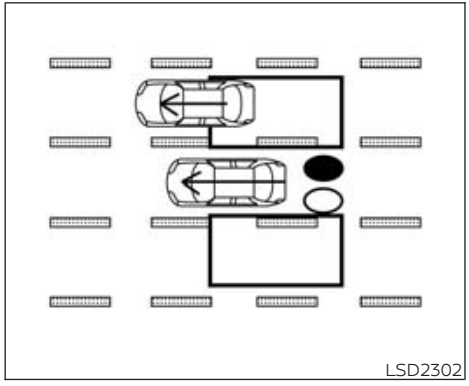

Illustration 4– Overtaking another vehicle

Overtaking another vehicle

Illustration 4: The side BSW/RCTA indicator light illuminates if you overtake a vehicle and that vehicle stays in the detection zone for approximately 3 seconds.

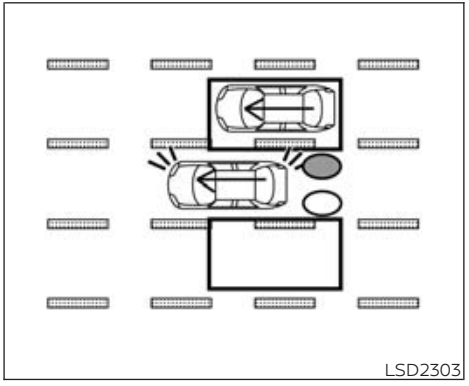

Illustration 5– Overtaking another vehicle

Illustration 5: If the driver activates the turn signal while another vehicle is in the detection zone, then the system chimes (twice) and the side BSW/RCTA indicator light and the BSW indicator flash.

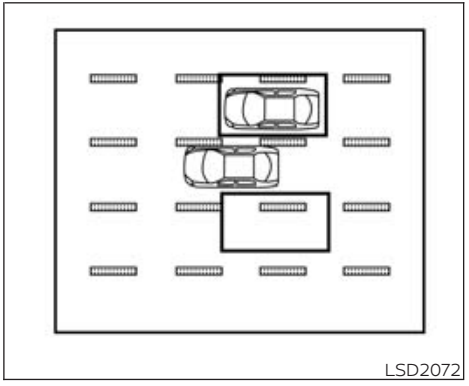

Illustration 6– Overtaking another vehicle

Illustration 6: If the I-BSI system is on and your vehicle approaches a lane marker while another vehicle is in the detection zone, the system chimes (three times) and the side BSW/RCTA indicator light and the BSW indicator flash. The I-BSI system activates to help return the vehicle back to the center of the driving lane.

NOTE:

- **When overtaking several vehicles in a row, the vehicles after the first vehicle may not be detected if they are traveling close together.**
- **The radar sensors may not detect slower moving vehicles if they are passed quickly.**

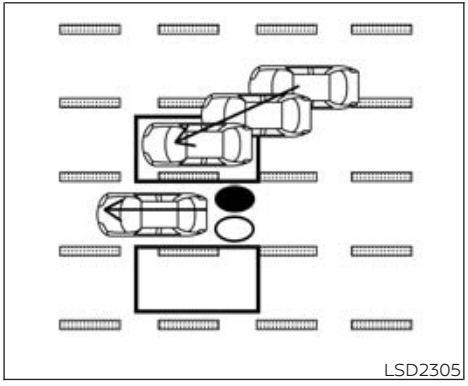

Illustration 7– Entering from the side

Entering from the side

Illustration 7: The side BSW/RCTA indicator light illuminates if a vehicle enters the detection zone from either side.

NOTE:

The radar sensors may not detect a vehicle which is traveling at about the same speed as your vehicle when it enters the detection zone.

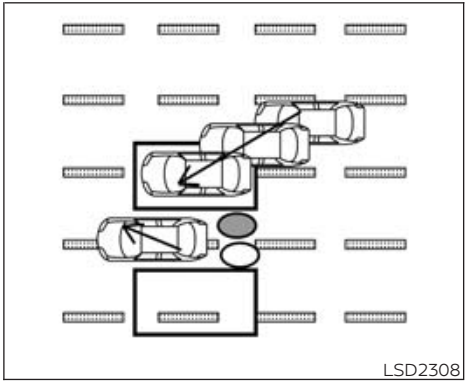

Illustration 8– Entering from the side

Illustration 8: If the driver activates the turn signal while another vehicle is in the detection zone, then the side BSW/RCTA indicator light and the BSW indicator flash and a chime will sound twice.

NOTE:

If the driver activates the turn signal before a vehicle enters the detection zone, the side BSW/RCTA indicator light will flash but no chime will sound when another vehicle is detected.

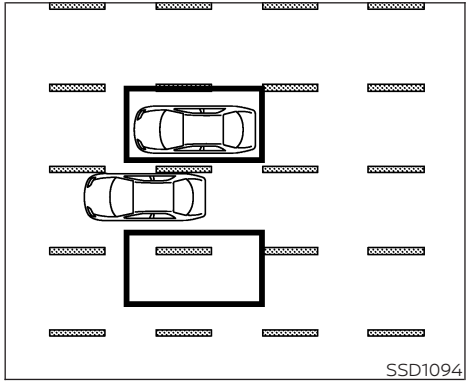

Illustration 9– Entering from the side

Illustration 9: If the I-BSI system is on and your vehicle approaches the lane marker while another vehicle is in the detection zone, the system chimes (three times) and the side BSW/RCTA indicator light and the BSW indicator flash. The I-BSI system activates to help return the vehicle back to the center of the driving lane.

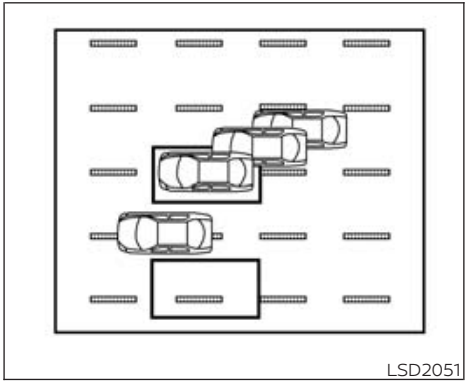

Illustration 10: – Entering from the side

Illustration 10: The I-BSI system will not operate if your vehicle is on a lane marker when another vehicle enters the detection zone. In this case only the BSW system operates.

NOTE:

- **The radar sensors may not detect a vehicle which is traveling at about the same speed as your vehicle when it enters the detection zone.**
- **I-BSI will not operate or will stop operating and only a warning chime will sound under the following conditions:**
  - **When the brake pedal is depressed.**
  - **When the vehicle is accelerated during I-BSI system operation.**
  - **When steering quickly.**
  - **When the ICC, I-FCW or AEB with Pedestrian Detection warnings sound.**
  - **When the hazard warning flashers are operated.**
  - **When driving on a curve at a high speed.**

SYSTEM TEMPORARILY UNAVAILABLE

Under the following conditions, a chime will sound, the following message will appear in the vehicle information display and the I-BSI system will be turned off automatically. The I-BSI system will not be available until the conditions no longer exist.

- "Unavailable Slippery Road"
  - When the VDC system (except TCS function) or ABS operates.
- "Currently Unavailable"
  - When the VDC system is turned off.

- "Unavailable Camera Temperature High":
  If the vehicle is parked in direct sunlight under high temperature conditions (over approximately 104°F (40°C)).
- "Unavailable Side Radar Obstruction":
  When side radar blockage is detected.

Turn off the I-BSI system and turn it on again when the above conditions no longer exist.

SYSTEM MALFUNCTION

When the I-BSI system malfunctions, it will be turned off automatically, a chime will sound, and the "Malfunction See Owner's Manual" warning message with the BSW indicator (orange) will appear in the vehicle information display.

Action to take:

Stop the vehicle in a safe location, place the vehicle in the P (Park) position, turn the engine off and restart the engine. If the "Malfunction See Owner's Manual" warning message with the BSW indicator (orange) continues to be displayed, have the I-BSI system checked. It is recommended you visit a certified NISSAN dealer for this service.

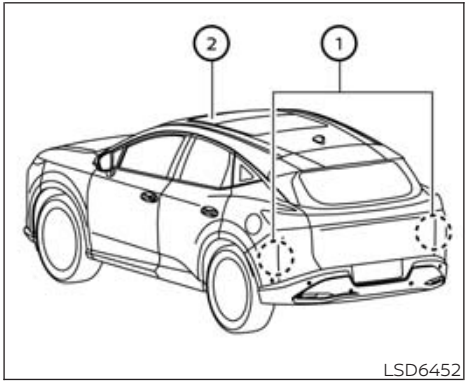

SYSTEM MAINTENANCE

Basic information

The two radar sensors ① for the I-BSI system are located near the rear bumper. Always keep the area near the radar sensors clean.

The radar sensors may be blocked by temporary ambient conditions such as splashing water, mist or fog.

The blocked condition may also be caused by objects such as ice, frost or dirt obstructing the radar sensors.

Check for and remove objects obstructing the radar sensors.

Do not attach stickers (including transparent material), install accessories or apply additional paint near the radar sensors.

Do not strike or damage the area around the radar sensors.

It is recommended you visit a certified NISSAN dealer if the area around the radar sensors is damaged due to a collision.

The lane camera unit ② for I-BSI system is located above the inside mirror. To keep the proper operation of I-BSI and prevent a system malfunction, be sure to observe the following:

- Always keep the windshield clean.
- Do not attach a sticker (including transparent material) or install an accessory near the camera unit.
- Do not place reflective materials, such as white paper or a mirror, on the instrument panel. The reflection of sunlight may adversely affect the camera unit's capability of detecting the lane markers.

- Do not strike or damage the areas around the camera unit. Do not touch the camera lens or remove the screw located on the camera unit. It is recommended that you contact a certified NISSAN dealer if the camera unit is damaged due to an accident.

Radio frequency statement

For USA

This device complies with Part 15 of the FCC Rules.

Operation is subject to the following two conditions:

1. This device may not cause harmful interference, and
2. This device must accept any interference received, including interference that may cause undesired operation.

FCC Warning

Changes or modifications not expressly approved by the party responsible for compliance could void the user's authority to operate the equipment.

For Canada

This device contains licence-exempt transmitter(s)/receiver(s) that comply with Innovation, Science and Economic Development Canada's licence-exempt RSS(s). Operation is subject to the following two conditions:

1. This device may not cause interference.
2. This device must accept any interference, including interference that may cause undesired operation of the device.

Radiofrequency radiation exposure information:

This equipment complies with radiation exposure limits set forth for an uncontrolled environment. This equipment should be installed and operated with minimum distance of 20 cm between the radiator and the body of any persons, user or bystander.

BASIC INFORMATION

⚠ WARNING

Failure to follow the warnings and instructions for proper use of the RCTA system could result in serious injury or death.

- **The RCTA system is not a replacement for proper driving procedures and is not designed to prevent contact with vehicles or objects. When backing out of a parking space, always use the side and rear mirrors and turn and look in the direction your vehicle will move. Never rely solely on the RCTA system.**

The RCTA system will assist you when backing out from a parking space. When the vehicle is in reverse, the system is designed to detect other vehicles approaching from the right or left of the vehicle. If the system detects cross traffic, it will alert you.

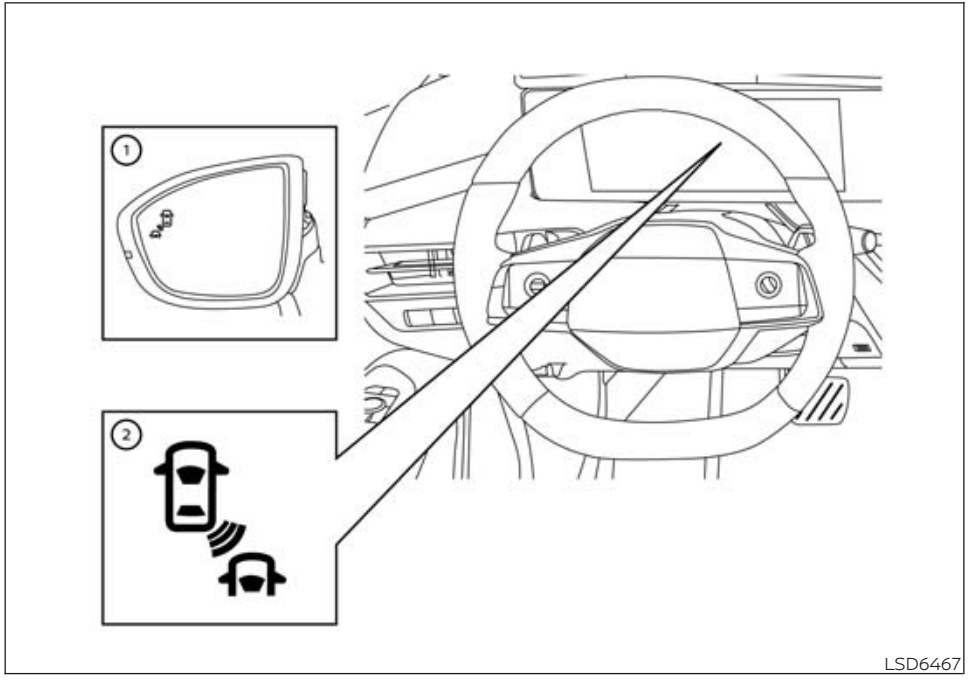

RCTA SYSTEM OPERATION

① Side BSW/RCTA Indicator Light
② BSW indicator

The RCTA system can help alert the driver of an approaching vehicle when the driver is backing out of a parking space.

When the shift position is in R (Reverse) and the vehicle speed is less than approximately 5 mph (8 km/h), the RCTA system is operational.

If the radar detects an approaching vehicle from either side, the system chimes (once) and the side BSW/RCTA indicator light flashes on the side the vehicle is approaching from.

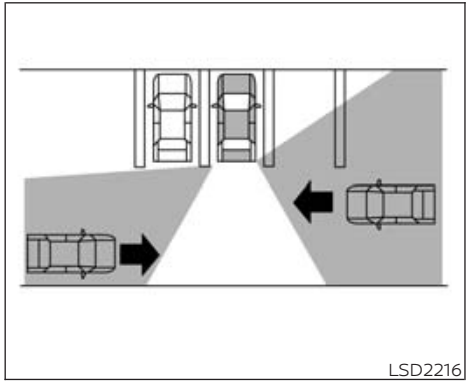

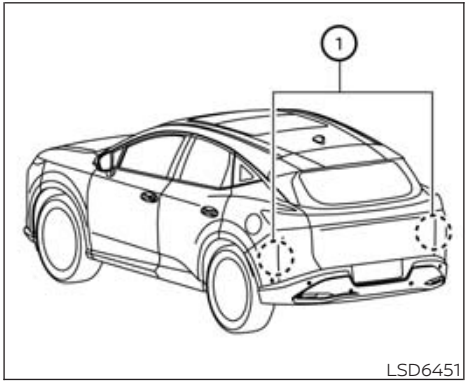

The RCTA system uses radar sensors ① installed on both sides near the rear bumper to detect an approaching vehicle.

The radar sensors ① can detect an approaching vehicle from up to approximately 66 ft. (20 m) away.

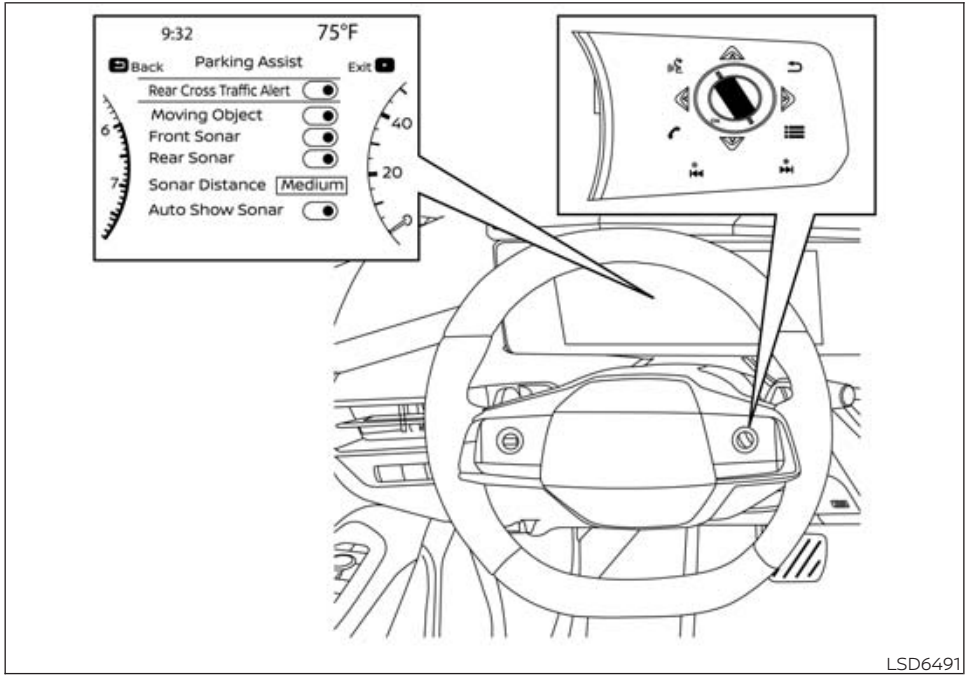

HOW TO ENABLE/DISABLE THE RCTA SYSTEM

Perform the following steps to enable or disable the RCTA system.

1. Press the ◀ ▶ button until "Settings" displays in the vehicle information display and then press the OK button. Use the scroll dial to select "Driver Assistance." Then press the OK button.
2. Select "Parking Assist" and press the OK button.
3. Select "Rear Cross Traffic Alert" and press the OK button to turn the system on or off.

NOTE:

- **When enabling/disabling the system, the system setting will be retained even if the engine is restarted.**

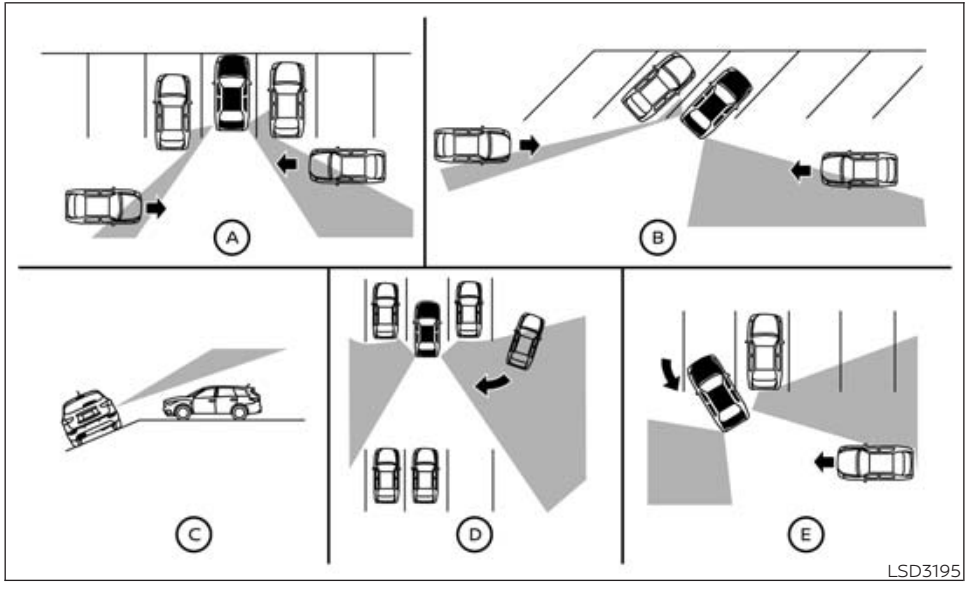

RCTA SYSTEM LIMITATIONS

WARNING

Listed below are the system limitations for the RCTA system. Failure to operate the vehicle in accordance with these system limitations could result in serious injury or death.

- **Always check surroundings and turn to check what is behind you before backing up. The radar sensors detect approaching (moving) vehicles. The radar sensors cannot detect every object such as:**
  - **Pedestrians, bicycles, motorcycles, animals or child-operated toy vehicles**
  - **A vehicle that is passing at speeds greater than approximately 19 mph (30 km/h)**
  - **A vehicle that is passing at speeds lower than approximately 5 mph (8 km/h)**
- **The radar sensors may not detect approaching vehicles in certain situations:**
  - **Illustration Ⓐ: When a vehicle parked next to you obstructs the beam of the radar sensor.**
  - **Illustration Ⓑ: When the vehicle is parked in an angled parking space.**
  - **Illustration Ⓒ: When the vehicle is parked on inclined ground.**
  - **Illustration Ⓓ: When an approaching vehicle turns into your vehicle's parking lot aisle.**

- Illustration Ⓔ: When the angle formed by your vehicle and approaching vehicle is small.

- The following conditions may reduce the ability of the radar to detect other vehicles:
  - Severe weather
  - Road spray
  - Ice/frost/snow/dirt build-up on the vehicle
- Do not attach stickers (including transparent material), install accessories or apply additional paint near the radar sensors. These conditions may reduce the ability of the radar to detect other vehicles.
- Excessive noise (e.g., audio system volume, open vehicle window) will interfere with the chime sound, and it may not be heard.

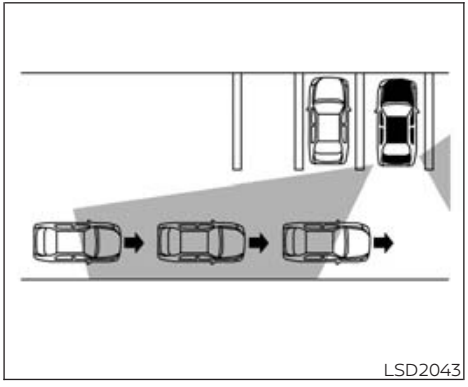

Illustration 1

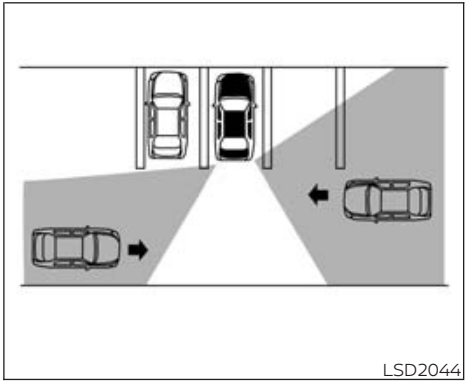

Illustration 2

NOTE:

In the case of several vehicles approaching in a row (Illustration 1) or in the opposite direction (Illustration 2), a chime may not be sounded by the RCTA system after the first vehicle passes the sensors.

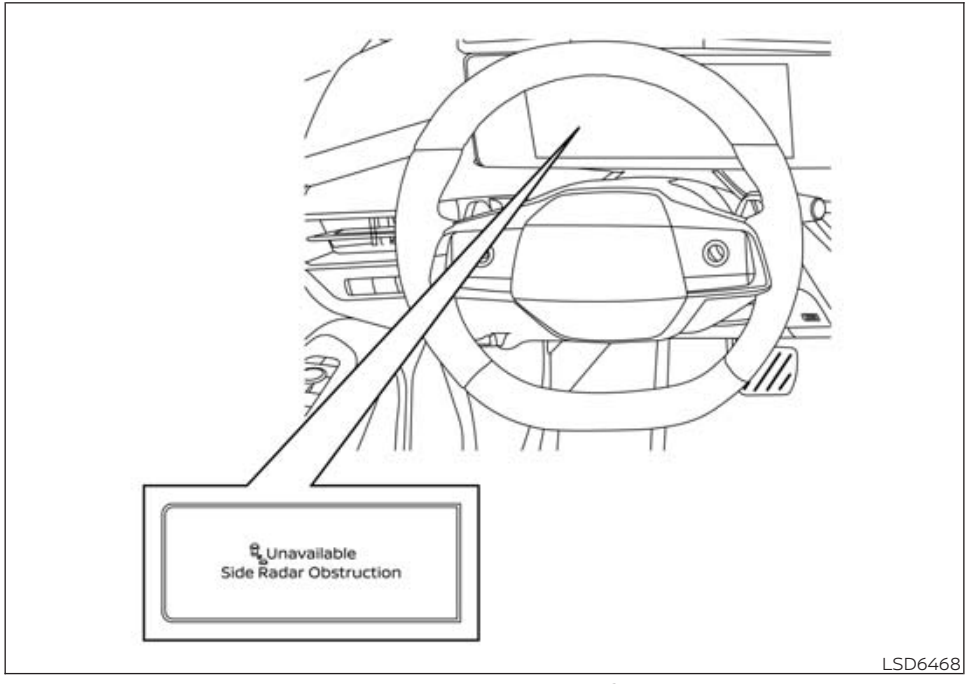

SYSTEM TEMPORARILY UNAVAILABLE

Basic Information

When radar blockage is detected, the system will be deactivated automatically.

The "Unavailable: Side Radar Obstruction" warning message will appear in the vehicle information display.

The systems are not available until the conditions no longer exist.

The radar sensors may be blocked by temporary ambient conditions such as splashing water, mist or fog.

The blocked condition may also be caused by conditions such as ice, snow, frost or dirt obstructing the radar sensors.

NOTE:

If the BSW system stops working, the RCTA and I-BSI systems will also stop working.

Action to take

When the above conditions no longer exist, the system will resume automatically.

Malfunction

When the RCTA system malfunctions, it will turn off automatically. The BSW indicator (orange) will appear in the vehicle information display.

NOTE:

If the BSW system stops working, the RCTA system will also stop working.

Action to take

Stop the vehicle in a safe location, place the vehicle in the P (Park) position, turn the engine off and restart the engine. If the message continues to appear, have the system checked. It is recommended that you visit a NISSAN dealer for this service.

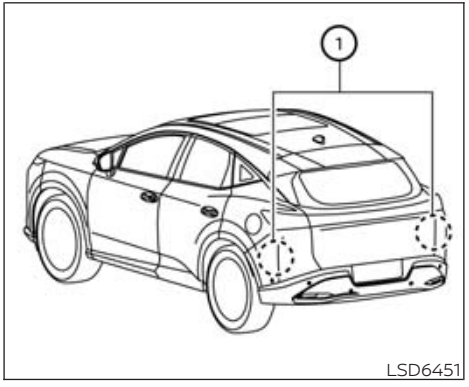

SYSTEM MAINTENANCE

Basic Information

The two radar sensors ① for the BSW and RCTA systems are located near the rear bumper. Always keep the area near the radar sensors clean.

The radar sensors may be blocked by temporary ambient conditions such as splashing water, mist or fog.

The blocked condition may also be caused by objects such as ice, frost or dirt obstructing the radar sensors.

Check for and remove objects obstructing the area around the radar sensors.

Do not attach stickers (including transparent material), install accessories or apply additional paint near the radar sensors.

Do not strike or damage the area around the radar sensors. It is recommended that you visit a NISSAN dealer if the area around the radar sensors is damaged due to a collision.

Radio frequency statement

For USA

This device complies with Part 15 of the FCC Rules.

Operation is subject to the following two conditions:

1. This device may not cause harmful interference, and
2. This device must accept any interference received, including interference that may cause undesired operation.

FCC Warning

Changes or modifications not expressly approved by the party responsible for compliance could void the user's authority to operate the equipment.

For Canada

This device contains licence-exempt transmitter(s)/receiver(s) that comply with Innovation, Science and Economic Development Canada's licence-exempt RSS(s). Operation is subject to the following two conditions:

1. This device may not cause interference.
2. This device must accept any interference, including interference that may cause undesired operation of the device.

Radiofrequency radiation exposure information:

This equipment complies with radiation exposure limits set forth for an uncontrolled environment. This equipment should be installed and operated with minimum distance of 20 cm between the radiator and the body of any persons, user or bystander.

OVERVIEW

ProPILOT Assist is a hands on driver assistance system intended for limited access expressways and not designed to be used on city/rural streets. The system is intended to help keep the vehicle in the center of the lane and maintain a preset distance to the vehicle ahead traveling in the same lane. There are two available levels of ProPILOT Assist which include the following additional features:

ProPILOT Assist:

- Intelligent Cruise Control (ICC) (P. 362).
- Steering Assist (P. 378).

ProPILOT Assist 1.1 (if so equipped):

- Speed Adjust by Route (P. 376).
- Speed Limit Assist (P. 370).
- Extended stop, see "Intelligent Cruise Control (ICC)" (P. 362).

ProPILOT Assist 2.1 (if so equipped):

- Steering Assist with HD map data (a feature of ProPILOT Assist 2.1) (P. 381).
- Lane Change Assist (P. 385).
- Passing Assist (P. 388).

NOTE:

A subscription is required for ProPILOT Assist 2.1 features.

To determine if your vehicle is equipped:

ProPILOT Assist 1.1 will have a steering wheel similar to this image and only one roof mounted antenna:

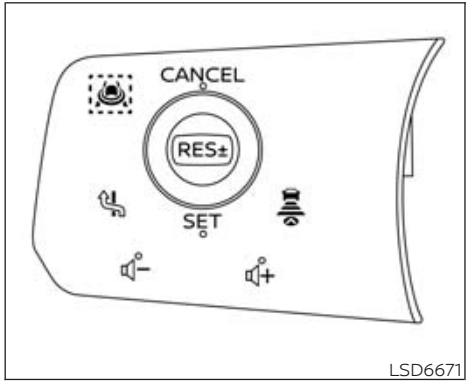

LSD6671

NOTE:

ProPILOT Assist 1.1 is only on vehicles equipped with an in-vehicle Map locator system.

ProPILOT Assist 2.1 will have a steering wheel similar to this image and two roof mounted antennas (left side is GNSS antenna):

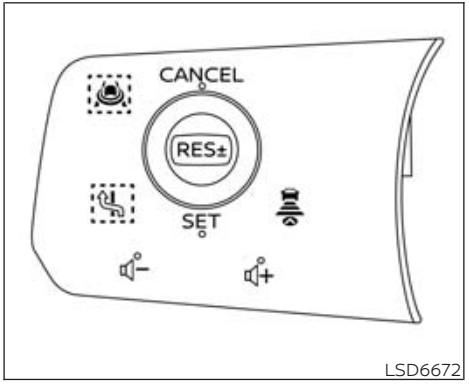

LSD6672

NOTE:

It is important to understand which features your vehicle is equipped as some portions of this section may not be applicable.

⚠WARNING

Applicable to ProPILOT Assist suite of systems, including ProPILOT Assist 1.1, ProPILOT Assist 2.1, Intelligent Cruise Control (ICC), Steering Assist, Lane Change Assist, Passing Assist, Driver Monitoring System and conventional (fixed speed) cruise control, referenced below as "ProPILOT Assist systems" (All systems if so equipped).

- **Failure to follow the following warnings and instructions for proper use of the ProPILOT Assist systems, as applicable, could result in an accident causing serious injury or death.**
- **Always drive carefully and attentively when using the ProPILOT Assist systems. Read and understand the Owner's Manual thoroughly before using the ProPILOT Assist systems. To avoid serious injury or death, do not rely on the systems to prevent accidents or to control the vehicle's speed in emergency situations.**
- **Do not use the ProPILOT Assist systems except in appropriate road and traffic conditions.**
- **The ProPILOT Assist systems are for limited access freeway use only and are not intended for city driving.**
- **The ProPILOT Assist systems are not self-driving systems. Within the limits of their capabilities, as described in this manual, they help the driver with certain driving activities.**

- **The ProPILOT Assist systems are not replacements for proper driving procedures and will not correct careless, inattentive or absent-minded driving. Regardless of which system or function is being used, it is the driver's responsibility to stay alert, drive safely, and be in control of the vehicle at all times. Failure to apply the brakes or steer the vehicle when necessary may result in a serious accident.**
- **The ProPILOT Assist systems are only aids to assist the driver and are not collision warning or avoidance devices.**
- **There are limitations to the ProPILOT Assist systems' capabilities. Never rely solely on these systems. The ProPILOT Assist systems do not function in all driving, traffic, weather and road conditions.**
- **Never unfasten your safety seat belt when using the ProPILOT Assist. Doing so automatically cancels the ProPILOT Assist systems.**
- **When using the ProPILOT Assist systems, always observe posted speed limits and do not set the speed over them.**
- **When the accelerator pedal is depressed, the ProPILOT Assist systems will not provide automatic braking and/or the approach warning. The driver must manually control the vehicle speed to maintain a safe distance to the vehicle ahead. Failure to do so could result in severe personal injury or death.**
- **Do not rely on the ProPILOT Assist systems to prevent accidents. The driver must maintain a safe distance to the vehicle ahead by braking or accelerating, depending on the surrounding circumstances.**
- **When using Steering Assist, it is the driver's responsibility to stay alert, drive safely, keep the vehicle in the traveling lane and be in control of the vehicle at all times. Never take your hands off the steering wheel while driving unless the driving conditions allow and the ProPILOT Assist system is in Hands Off mode. Keep your hands on the steering wheel and drive the vehicle safely. (for ProPILOT Assist 2.1)**
- **Steering Assist is intended for use on limited access freeways with gentle (moderate) curves. To avoid risk of an accident, do not use this system on local or non-highway/freeway roads.**
- **Steering Assist only steers the vehicle to maintain its position in the center of a lane. The vehicle will not steer to avoid objects in the road in front of the vehicle, to avoid a vehicle moving into your lane or to avoid a vehicle approaching from the side.**
- **Lane Change Assist and Passing Assist only assist the driver to make a lane change. These systems do not steer the vehicle to avoid a collision. Be sure to keep your hands on the steering wheel and move safely to a different lane.**
- **When using conventional (fixed speed) cruise control mode, a warning chime does not sound to warn you if you are too close to the vehicle ahead, as neither the presence of the vehicle ahead nor the vehicle-to-vehicle distance is detected. Pay special attention to the distance between your vehicle and the vehicle ahead of you, or a collision could occur.**

- **Always confirm the setting in the ICC system display.**
- **Do not use the conventional (fixed speed) cruise control mode when driving under the following conditions (doing so could cause a loss of vehicle control and result in an accident):**
  - **When it is not possible to keep the vehicle at a set speed**
  - **In heavy traffic or in traffic that varies in speed**
  - **On winding or hilly roads**
  - **On slippery roads (rain, snow, ice, etc.)**
  - **In very windy areas**

ProPILOT Assist SYSTEMS OVERVIEW

Each ProPilot Assist feature is designed to help the driver in different ways as they drive.

Here is a summary of these features. See the specified page for detailed information. The availability of each feature depends on the type of the ProPILOT Assist system (ProPILOT Assist 1.1 or ProPILOT Assist 2.1).

- **Conventional (fixed speed) Cruise Control:**
  - Allows the driver to drive the vehicle at a fixed speed without keeping their foot on the accelerator pedal.
- **Intelligent Cruise Control (ICC):**
  - Helps the driver maintain a selected distance from the vehicle ahead and can reduce the speed to match a slower vehicle ahead.
  - Decelerates the vehicle to a standstill when a vehicle ahead slows to a stop.
- **Extended Stop:**
  - Enables the vehicle to start moving again automatically if vehicle is stopped for less than approximately 30 seconds on the highway.
- **Speed Limit Assist:**
  - A feature of the Intelligent Cruise Control that detects a change of the speed limit, indicates the detected speed limit sign and can apply to the vehicle set speed automatically or manually.
- **Speed Adjust by Route:**
  - A feature of Intelligent Cruise Control that adjusts the vehicle speed depending on road curvature in freeway curves and freeway interchanges, using road information provided by the Map locator system.
- **Steering Assist:**
  - Assists the driver to help keep the vehicle within the center of the traveling lane.
  - If traffic and other conditions and laws permit, and it is safe to do so, driver's hands can be taken off the steering wheel. Always pay attention to the road and the operation of the vehicle. (A feature of ProPILOT Assist 2.1)
- **Lane Change Assist:**
  - Help the driver make a lane change when the turn signal is activated. (A feature of ProPILOT Assist 2.1)
- **Passing Assist:**
  - Help the driver make a lane change when a slower vehicle is detected ahead (A feature of ProPILOT Assist 2.1).

ProPILOT Assist MODE INDICATORS

Basic information

ProPILOT Assist has a variety of modes depending on various conditions and are represented by color. The system will automatically transition to the highest available mode when conditions are met. The table below shows the available system modes (higher mode towards the bottom) and the required conditions.

Mode indicator:

- **OFF**
  - No systems active — driver initiation required
- **Gray**
  - No systems active — driver activation required
- **White**
  - Intelligent Cruise Control (ICC) active
- **Green**
  - ICC and Steering Assist active
  - Driver is holding the steering control
- **Blue (if ProPILOT Assist 2.1 is equipped)**
  - ICC and Steering Assist active
  - If driver is paying attention to the traffic and other conditions and laws permit, and it is safe to do so, driver is able to take off their hands from the steering wheel.

NOTE:

If the steering wheel icon is yellow, this indicates that Steering Assist may be limited and the driver should take over steering.

How it works:

ProPILOT Assist Systems use some or all of the following components:

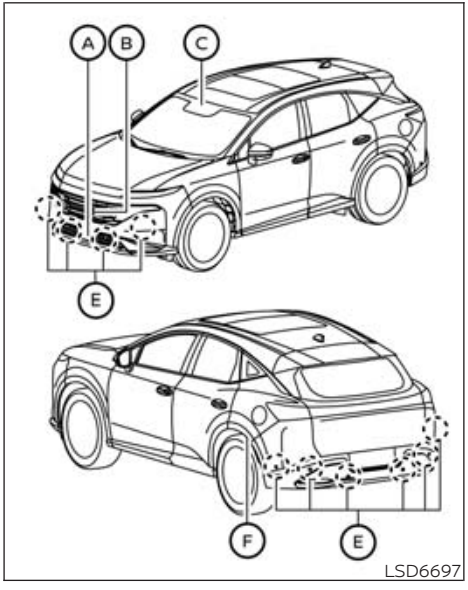

Type A (for vehicles with ProPILOT Assist 1.1)

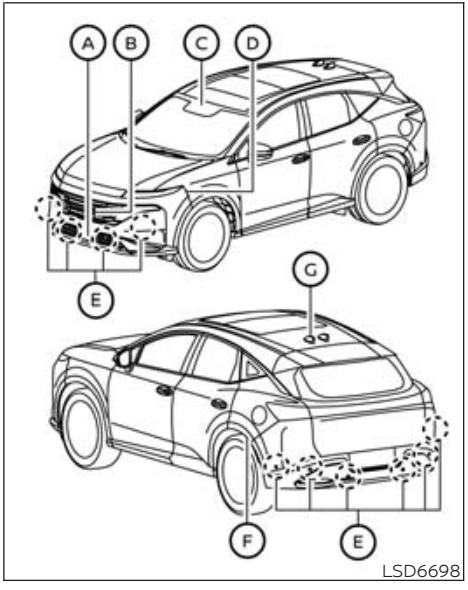

Type B (for vehicles with ProPILOT Assist 2.1)

Ⓐ **Front radar sensor:**

- Monitors the vehicle ahead in the same and adjacent lanes.

Ⓑ **Around View® Monitor cameras (front and rear):**

- Monitor the surroundings.

Ⓒ **Multi-sensing front camera:**

- Monitors the other vehicles and empty spaces in adjacent lanes as well as lane markings.

Ⓓ **Side radar sensors (front) (ProPILOT Assist 2.1 only):**

- Monitor the other vehicles and empty spaces in the adjacent lanes.

Ⓔ **Sonar sensors:**

- Monitor the surroundings.

Ⓕ **Side radar sensors (rear):**

- Monitor the other vehicles in the adjacent lanes and approaching from the rear (i.e. blind spot).

Ⓖ **GNSS antenna (ProPILOT Assist 2.1 only):**

- Used to gather GNSS signal to understand vehicle positioning.

NOTE:

It is important to ensure the radar sensors, cameras and sonar sensors are clear before each drive. Unclean or damaged cameras and sensors, as well as environmental conditions, can affect system performance.

Always keep the area near the radar sensors clean.

The radar sensors may be blocked by temporary ambient conditions such as snow, splashing water, mist or fog.

The blocked condition may also be caused by objects such as ice, frost or dirt obstructing the radar sensors.

Check for and remove objects obstructing the area around the radar sensors.

Do not attach stickers (including transparent material), install accessories or apply additional paint near the radar sensors.

Do not strike or damage the area around the radar sensors.

It is recommended that you visit a NISSAN dealer if the area around the radar sensors is damaged due to a collision.

Precautions on repairing the bumper

When repairing the bumper, take caution because the radar sensors are installed on the bumper.

The radar sensor detects objects by emitting a radar signal and then measuring its reflection.

⚠ WARNING

If an improper repair is performed on the bumper (for example, application of putty made from different materials, repaint, etc.) the radar signal could be weakened or prevented from functioning properly. This may cause the radar sensor not to detect objects correctly. Improper repair may result in serious personal injury. If it is necessary to repair the bumper, it is recommended you visit a NISSAN dealer for this service.

FCC Notice:

For USA:

This device complies with Part 15 of the FCC Rules. Operation is subject to the following two conditions: (1) This device may not cause harmful interference, and (2) this device must accept any interference received, including interference that may cause undesired operation.

CAUTION TO USERS

Changes or modifications not expressly approved by the party responsible for compliance could void the user's authority to operate the equipment.

For Canada:

This device contains licence-exempt transmitter(s)/receiver(s) that comply with Innovation, Science and Economic Development Canada's licence-exempt RSS(s). Operation is subject to the following two conditions: (1) This device may not cause interference. (2) This device must accept any interference, including interference that may cause undesired operation of the device.

Limitations

Many factors can impact the performance of ProPILOT Assist systems, causing the systems not to perform as intended. ProPILOT Assist functions should not be used in certain situations. These include (but are not limited to):

- Poor visibility due to heavy rain, snow, ice, fog, etc.
- Bright light (due to oncoming traffic, direct sunlight, etc.)
- Obstruction to radars, sensors and cameras caused by mud, dirt, ice, snow, etc.
- Interference to sensors and radars (such as a bike rack, decals, etc.)
- Faded or inconsistent lane marking
- Construction zones
- Barren landscape
- Wide or narrow lanes
- Hard deceleration
- Tollbooths

ProPILOT Assist may not react to:

- Stationary vehicles
- Pedestrians, bicycles or animals
- Road debris
- Road pylon in a construction zone

For additional information, see "Overview" (P. 344)

⚠ WARNING

Listed below are the system limitations for the ProPILOT Assist functions and systems, including ProPILOT Assist 1.1, ProPILOT Assist 2.1, Intelligent Cruise Control (ICC), Steering Assist, Lane Change Assist. Failure to operate the vehicle in accordance with these system limitations could result in serious injury or death:

- **These systems are primarily intended for use on freeways. It is not advisable to use these systems in city/ urban traffic.**
- **These systems will not adapt automatically to all road conditions. They should be used in evenly flowing traffic. Do not use these systems on roads with sharp curves or in inclement weather or adverse road conditions.**
- **There are performance limits to all ProPILOT Assist functions. Never rely solely on these systems. These systems do not correct careless, inattentive, or absentminded driving or overcome poor visibility in inclement weather.**
- **When using these systems, the driver must be attentive to the driving task. When necessary, decelerate the vehicle speed by using the brake pedal, accelerate using the accelerator pedal, and steer the vehicle as appropriate in order to maintain a safe distance between vehicles and manage changing or dynamic traffic, vehicle and roadway conditions.**
- **When the ProPILOT Assist function automatically brings the vehicle to a stop, your vehicle can automatically accelerate if the vehicle is stopped**

for less than approximately 30 seconds on the freeway. Always be prepared to apply the brakes and stop your vehicle if necessary.

- Always check your surroundings before restarting the vehicle when it has been at a stop.
- These systems are not designed to detect anything other than motorized vehicles travelling in the same direction on the roadway. In particular, the systems do not detect the following objects:
  - Pedestrians, animals or objects in the roadway
  - Oncoming vehicles in the same lane
  - Motorcycles traveling offset in the travel lane
  - Road debris
- The ProPILOT Assist functions will not work properly or will be canceled if any of following conditions are met:
  - The system determined that it cannot correctly detect the vehicle behind in an adjacent lane.
- In the following situations, the ProPILOT Assist functions and system may not operate properly. To avoid accidents or unwanted system operation, never use these systems under the following conditions:
  - On roads with heavy, high-speed traffic or sharp curves
  - On slippery or adverse road surfaces, such as on wet, icy or snowy roads, or when roadway traffic is causing adverse travel conditions (i.e. road spray from passing vehicles)
  - On unpaved or uneven roadway surfaces, or on steep uphill or downhill roads
  - During inclement weather, such as rain, snow, fog, ice, sandstorms or dust storms
  - When sensor detection capabilities are reduced, for example:
  - When snow/ice/dirt are covering the sensors or the camera area of the windshield is fogged up
  - When objects, such as stickers, bike racks or cargo obstruct the vehicle sensors
  - When strong light (for example, sunlight or high beams from oncoming vehicles) enters the cameras or there is a sudden change in brightness (for example, entering or exiting a tunnel or driving under a bridge)
  - When traffic conditions make it difficult to keep a proper distance between vehicles because of frequent acceleration or deceleration, or when the cut-in detection function or approach warning activates frequently
  - When a complicated-shaped vehicle, such as a car carrier trailer or flatbed truck/trailer is near the vehicle ahead
  - When there is interference by other radar sources
  - When driving with vehicle equipment that is not original to the vehicle (for example, equipped with non-original brake, tire or suspension parts) or not within normal conditions (for example, tire wear, abnormal tire pressure, installation of tire chains, reduced headlight brightness)

- When excessively heavy baggage is loaded in the rear seat or cargo area of the vehicle, or when vehicle load capacity is exceeded.
- When towing a trailer or other vehicle
- When driving on roads with missing, unclear, discontinued or less detectable lane markers or roads with multiple parallel lane markers, or roads with markings or features that might be detected as lane markers (for example, wheel ruts and paving seams)
- When driving on roads where the lane markers or traffic patterns are changing, temporary or unusual (for example, merging or separating lanes, widering/narrowing lanes, exit ramps, toll gates, construction zones, lane closures)
- When the lane markers are not visible due to darkness and the headlights are off

- There are variety of conditions and situations in which the detection of a vehicle ahead may be delayed or the vehicle ahead may not be detected. A few examples include:
  - A vehicle suddenly cuts in front of your vehicle
  - When driving on a blind curve or winding road
  - A stationary vehicle or vehicle travelling at a much slower speed suddenly becomes apparent after the vehicle ahead changes lanes
  - When motorcycles are traveling offset from the center of the lane
- Drivers should always be attentive and take action if needed to manage the roadway and traffic situation.
- The Driver Monitoring System used to support ProPILOT Assist 2.1 may not detect the driver's condition in all situations, including:
  - When the camera or the driver is lit by sunlight or there are repeated changes in brightness (in sunlight and shadow alternatively)
  - When portions of the driver's face or head are hidden (for example, inappropriate driving position. For additional information , see "Driver Monitor" (P. 383), wearing sunglasses, a face mask or a hat)
  - When there is an obstruction between the driver's face and the monitoring camera
  - When the monitoring camera lens becomes dirty or obscured. For additional information, see "System maintenance" (P. 390)
  - When more than one face is recognized near the driver's seat (for example, a passenger is leaning over toward the driver)
  - When the driver narrows their eyes or loses their driving posture (for example, avoiding the sun glare, etc.)
- The side radar sensors may not detect or may have delayed detection of vehicles in adjacent lanes in some conditions, for example, vehicles approaching rapidly from behind, particularly high or low ground clearance vehicles, motorcycles, or a vehicle which has recently entered that zone from behind. Stay alert to surrounding vehicles and operate the steering wheel as needed for traffic conditions.

- **In some conditions, a vehicle or object can unexpectedly come into the sensor detection zone and cause automatic braking. Always stay alert and avoid using the systems where not recommended.**
- **Excessive noise will interfere with the warning chime sound and the beep may not be heard.**

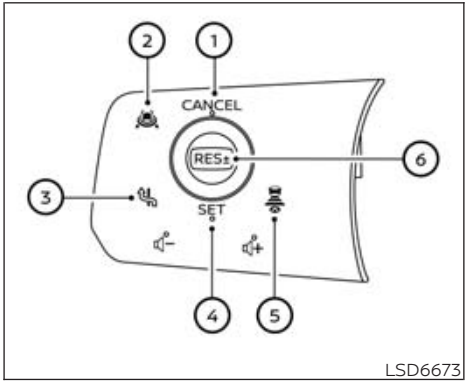

LSD6673

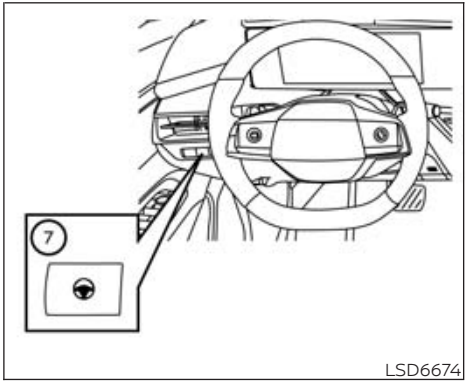

LSD6674

How to operate ProPILOT Assist

Basic Information

NOTE:

Switch placement and availability may vary depending on your vehicles features.
All available systems and features are activated simultaneously when ProPILOT Assist is activated.

1. **CANCEL switch:**

   Deactivates the ProPILOT Assist system

2. **ProPILOT Assist switch:**

   Turns the ProPILOT Assist system on or off

3. **Lane Change Assist switch (ProPILOT Assist 2.1):**

   Accepts or declines a lane change assist suggestion

4. **SET operation:**

   Sets desired cruise speed or reduces speed incrementally

5. **DISTANCE switch:**

   Adjusts distance to lead vehicle

6. **RES± operation:**

   Resumes set speed or increases speed incrementally

7. **Steering Assist switch:**

   Turns the Steering Assist function on or off

Turning on ProPILOT Assist (2-step operation)

1. Push the ProPILOT Assist switch
   - The ProPILOT Assist display appears.
   - Safety Shield status screen is temporarily displayed. For additional information, see "ProPILOT Assist Systems" (P. 344).

NOTE:

For conventional (fixed speed) cruise control mode, push and hold the ProPILOT switch for longer than approximately 1.5 seconds. No other ProPILOT Assist features are available in the conventional (fixed speed) cruise control mode.

2. Once the vehicle is at the desired speed, push the SET switch.
   - Vehicle will maintain the set speed unless the vehicle detects a slower vehicle in the traveling lane, or Speed Limit Assist or Speed Adjust by Route is active. For additional information, see "Speed Limit Assist - a feature of ProPILOT Assist with Navi-link (if so equipped)" (370) or "Speed Adjust by Route - a feature of ProPILOT Assist with Navi-link (if so equipped)" (P. 376)
   - Once engaged, ProPILOT Assist displays and indicators will appear. For additional information, see "ProPILOT Assist displays and indicators" (P. 358)

NOTE:

If ProPILOT Assist is in standby (step 1), the vehicle will not brake.

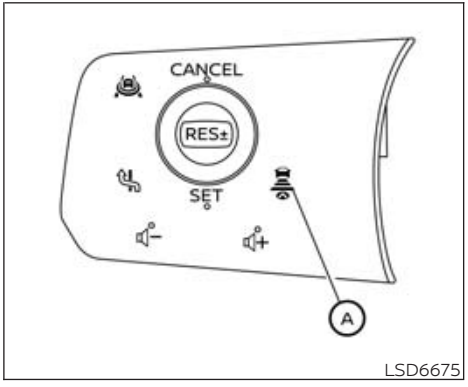

How to adjust distance setting

NOTE:

Switch placement and availability may vary depending on your vehicles features.

Cycle through the desired distance using the distance switch Ⓐ

- Distance will vary based on the vehicle speed as this setting is time dependent, not based on gap distance.

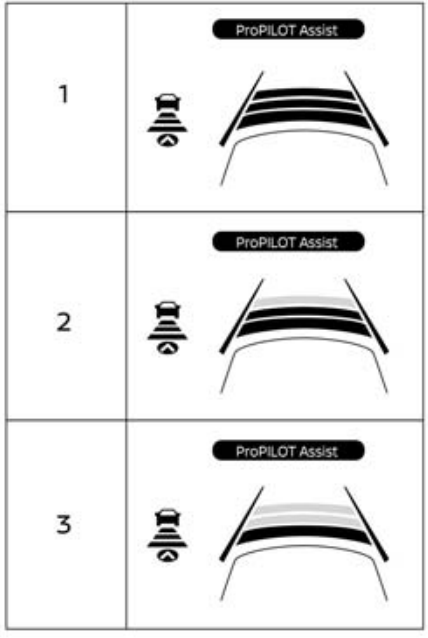

LSD6706

Approximate distance at 60 mph (100 km/h) [ft (m)]

1. Setting: 3 bars
   - 200 ft (60 m)
2. Setting: 2 bars
   - 150 ft (45 m)
3. Setting: 1 bar
   - 90 ft (30 m)

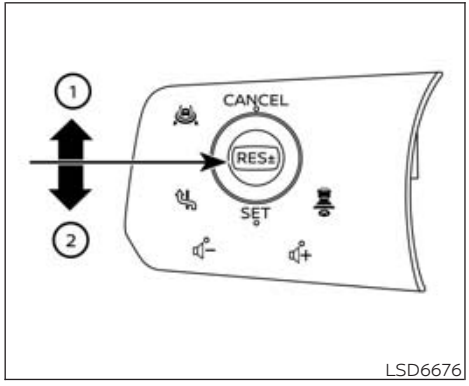

LSD6676

How to change the vehicle set speed

To increase speed:

- Push up and hold the RES± switch to the cancel direction ①. The set vehicle speed increases by approximately 5 mph (5 km/h).
- Push up and quickly release the RES± switch to the cancel direction ①. Each time you do this, the set speed increases by approximately 1 mph (1 km/h).

To decrease speed:

- Push down and hold the RES± switch to the SET direction ②. The set vehicle speed decreases by approximately 5 mph (5 km/h).
- Push down and quickly release the RES± switch to the SET direction ②. Each time you do this, the set speed decreases by approximately 1 mph (1 km/h).

How to momentarily accelerate or decelerate

- Depress the accelerator pedal when acceleration is required. Release the accelerator pedal to resume the previously set vehicle speed. Vehicle set speed will blink to indicate the vehicle is traveling faster than the set speed.

NOTE:
Hands must be placed on the steering wheel to accelerate in Hands Off mode.

- Depressing the brake pedal when deceleration is required. Doing so will put the system in standby. Push up on the RES± switch to the cancel direction to resume the previously set vehicle speed.

⚠ WARNING

When the accelerator pedal is depressed, the ICC system will not provide automatic braking and approach warning. The driver must manually control the vehicle speed to maintain a safe distance to the vehicle ahead. Failure to do so could result in severe personal injury or death.

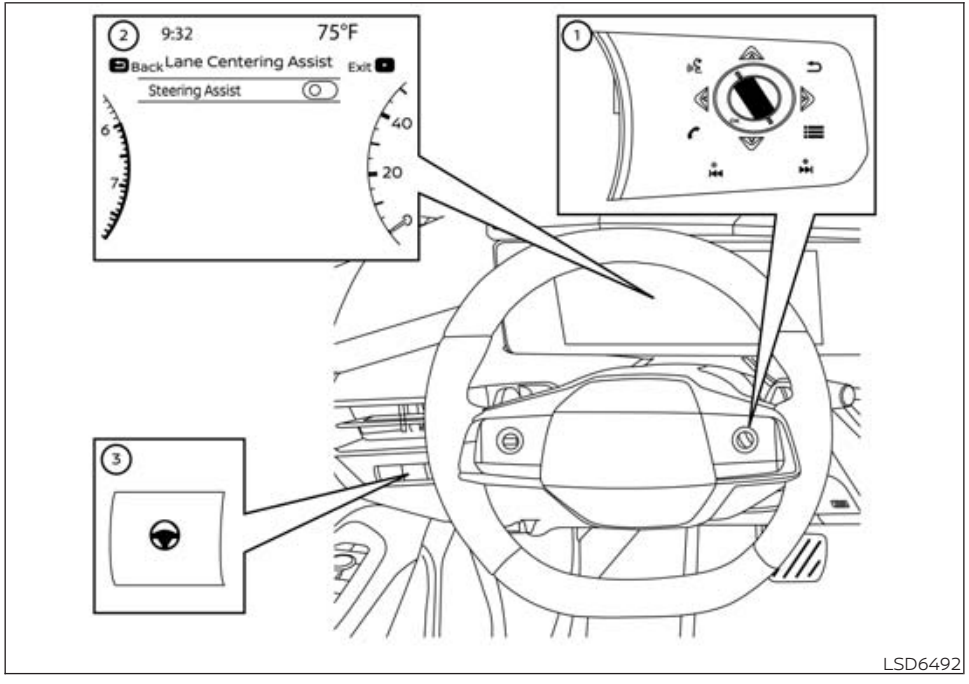

How to enable/disable Steering Assist

① Steering-wheel-mounted control (left)

② Vehicle information display

③ Steering Assist switch

Use the following methods to enable or disable the Steering Assist.

Steering Assist switch:

To turn the Steering Assist on or off, push the Steering Assist switch ③ on the instrument panel.

NOTE:

- **When the Steering Assist switch is used to turn the system on or off, the system remembers the setting even if the ignition switch is cycled. The switch must be pushed again to change the setting to on or off.**
- **The Steering Assist switch changes the status of the "Steering Assist" selection made in the "Settings" screen in the vehicle information display.**

Setting in the vehicle information display:

1. Press the ◀ ▶ button on the steering wheel ① until "Settings" displays in the vehicle information display ②.
2. Use the scroll dial ① to select "Driver Assistance" Then press the OK button ①.

3. Use the scroll dial ① to select "Lane Centering Assist" Then press the OK button ①.
4. Use the scroll dial ① to select "Steering Assist" and then press the OK button ① to turn the system on or off.

NOTE:

- **When the Cruise screen is displayed on the vehicle information display, press the OK button on the steering wheel to call up the "Driving Aids" setting display.**
- **When enabling/disabling the system through the vehicle information display or when pushing the Steering Assist switch, the system retains the current settings even if the engine is restarted.**

How to cancel the ProPILOT Assist system

To cancel the ProPILOT Assist system, use one of the following methods:

- Push the CANCEL switch. This will put the system in standby.
- Tap the brake pedal. This action will keep the system in standby. To resume push up on the RES± switch to the cancel direction to return to the original vehicle set speed, or push down the RES± switch to the SET direction to set the current vehicle speed.

NOTE:

When the ProPILOT Assist system is canceled while the vehicle is stopped, the electronic parking brake is automatically activated.

⚠ WARNING

To prevent the vehicle from moving or rolling unexpectedly, which could result in serious personal injury or property damage, before exiting the vehicle make sure to push the ProPILOT Assist switch to turn the system off, press the park button to shift to the P (Park) position, and turn the engine off.

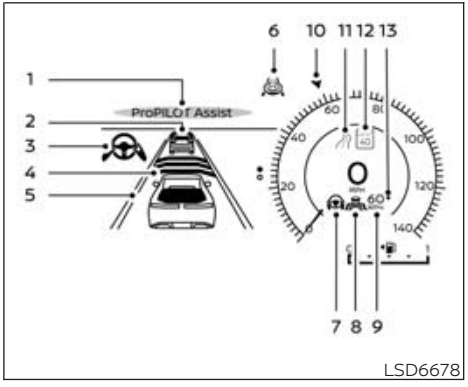

ProPILOT Assist DISPLAYS AND INDICATORS

ProPILOT Assist 1.1

1. **ProPILOT Assist activation**

   Displays once the ProPILOT Assist system is activated

2. **Vehicle ahead detection indicator**

   When the ICC is ON and active this indicates whether the system detects a vehicle in front of you

3. **Steering Assist indicator**

   Indicates the status of the Steering Assist function by the color of the indicator
   - Steering Assist indicator (gray): Steering Assist standby
   - Steering Assist indicator (green): Steering Assist active

4. **Set distance indicator**

   Displays the selected distance

5. **Lane marker indicator**

   Indicates whether the system detects lane markers
   - No lane markers displayed: Steering Assist is turned off
   - Lane marker indicator (gray): No lane markers detected
   - Lane marker indicator (green): Lane markers detected, Steering Assist is active
   - Lane marker indicator (yellow): Lane departure is detected

6. **ProPILOT Assist status indicator**

   Indicates the status of the ProPILOT Assist system by the color of the indicator
   - ProPILOT Assist status indicator (white): ProPILOT Assist is on but in standby.
   - ProPILOT Assist status indicator (blue): ProPILOT Assist active

7. **Steering Assist status indicator/warning**

   Displays the status of the Steering Assist by the color of the indicator/warning
   - No Steering Assist status indicator displayed: Steering Assist is turned off
   - Steering Assist indicator (gray): Steering Assist standby
   - Steering Assist indicator (green): Steering Assist active
   - Steering Assist indicator (yellow): Steering Assist malfunction
   - Steering Assist status indicator (red): Hands off detected

8. **Speed control status indicator/set distance indicator/lane marker indicator** ( )

   Displays the status of speed control by the color of the indicator, and displays the selected distance by the number of horizontal bars shown
   - Speed control status indicator (white): ICC standby
   - Speed control status indicator (green): ICC (distance control mode) is active
     - Green vehicle icon displayed: Vehicle detected ahead
     - No vehicle icon shown: No vehicle detected ahead (Your vehicle maintains the driver-selected set speed.)
   - Speed control status indicator (yellow): Indicates an ICC malfunction

Displays the status of the Steering Assist by the color of the lane marker indicator.
- Lane marker indicator (no lane): Steering Assist is turned off
- Lane marker indicator (gray): Steering Assist standby
- Lane marker indicator (green): Steering Assist active

9. **Vehicle set speed indicator (if so equipped)**

   Indicates the vehicle set speed
   - Green: ICC active
   - Gray: ICC standby

The speed unit can be converted between "MPH" and "km/h". For additional information, see "Unit/ Language" (P.130).

10. **Target speed indicator**(▶)

    Indicates the target vehicle speed
    - White triangle: Cruise control target speed
    - Green triangle: ICC target speed

11. **Road information indicator (if so equipped)** ( )

    Indicates the detected road information.

12. **Detected speed limit indicator (if so equipped)** (40)

    Indicates the currently detected speed limit.

13. **Speed Limit Assist indicator (if so equipped)** (A , ⬆ , ⬇)

    Indicates the Speed Limit Assist activation mode or system operation.

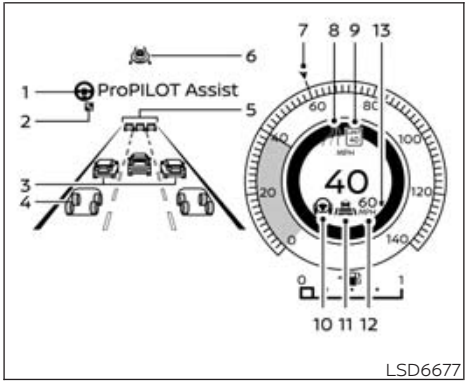

ProPILOT Assist 2.1

Display color will change depending on ProPILOT Assist 2.1 mode. For additional information, see "ProPILOT Assist mode indicators" (P. 347)

1. **Steering Assist indicator**

   Indicates the status of the Steering Assist function.

2. **Lane Change Assist Indicator**

   Icon is displayed when Lane Change Assist feature is available.

3. **Side detection**

   Indicates that a vehicle is detected in the side spot.

4. **Surrounding Vehicle Display**

   Displays other detected vehicles, including passenger vehicles, trucks and motorcycles. The multi-lane display is only available on HD* mapped, limited access freeway. (When driving at speeds more than approximately 37 MPH (60 km/h).)

   *: HD map data can be used with a subscription service which requires owner consent to activate. The subscription must be active to use these features. For additional information, see "License information (ProPILOT Assist 2.1" (P. 390)

5. **Vehicle ahead detection indicator**

   Displays whether the system detects a vehicle in front of you

6. **ProPILOT Assist 2.1 status indicator**

   Indicates the status of ProPILOT Assist 2.1.

7. **Vehicle Set Speed Indicator**

   Indicates the vehicle set speed.

8. **Road information indicator**

   Indicates the detected road information.

9. **Detected road sign (speed limit) indicator**

   Indicates the currently detected speed limit.

10. **Steering Assist indicator**

    Indicates the status of the Steering Assist function.

11. **Intelligent Cruise Control (ICC) Status Indicator**

    Displays the status of the Speed control including the distance setting and detection of a lead vehicle.

12. **Vehicle Set Speed Indicator**

    Indicates the vehicle set speed.

13. **Speed Limit Adjust Indicator (A)**

    Indicates the detected speed limit will be automatically applied to the vehicle set speed.

NOTE:

- **When the ProPILOT Assist is activated, the display will automatically be switched to the ProPILOT Assist display. To disable this function, turn off the vehicle information display: Settings – Customize Display – ProPILOT Assist Display.**

Press the ◀▶ button until "Settings" displays in the vehicle information display.

Use the scroll dial to select "Customize Display".

Use the scroll dial to select "ProPILOT Assist Display", press OK to turn ON/OFF.

- **The ProPILOT Assist 2.1 display is also shown in the Head Up Display (HUD). For additional information, see "ProPILOT Assist mode indicators" (P. 347)**
- **For additional License Information about HD map data, see "License information (ProPILOT Assist 2.1)" (P. 390)**

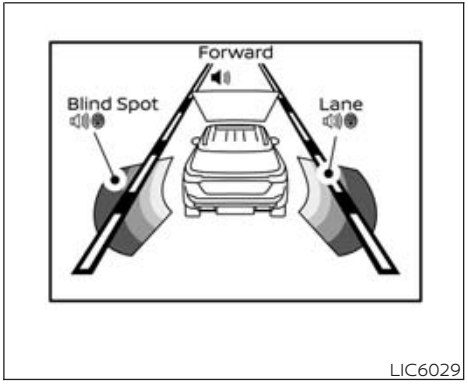

Example (all enabled)

Safety Shield Status Screen:

The Safety Shield Status Screen will be displayed after initiating the ProPILOT Assist system, prior to setting the vehicle speed. The display is used to show status of driver assistance features for blind spot, forward driving aids, and side aids. Pressing the ProPILOT Assist switch also activates Intervention systems, if selected in the Driver Assistance settings.

- When any of the "Warning" systems are enabled, the " 🔊 " mark is shown in each zone.

- When any of the "Intervention" systems are enabled, the " " mark is shown in each zone.
- When no system is enabled, "OFF" is shown in each zone.

NOTE:

Perform the following steps to change the status of the driving aids. Ue the vehicle information display:

1. **Press the ◀▶ button until "Settings" displays in the vehicle information display.**
2. **use the scroll dial to select "Driver Assistance." Then press the OK button.**

INTELLIGENT CRUISE CONTROL (ICC)

Basic Information

Intelligent Cruise Control (ICC) is a part of ProPILOT Assist. Read the entire ProPILOT Assist section before using this system, including how to operate the system and understanding the display. For additional information, see "ProPILOT Assist Systems" (P. 344), "How to operate ProPILOT Assist" (P. 353) and "ProPILOT Assist displays and indicators" (P. 358).

The ICC system uses a forward facing radar sensor and is designed to operate as follows:

- When there is no vehicle detected in the same traveling lane, the ICC system maintains the speed set by the driver.
- When there is a vehicle detected in the traveling lane, the ICC system adjusts the speed to maintain the distance, selected by the driver, from the vehicle ahead. If the vehicle ahead comes to a stop, the vehicle decelerates to a standstill. Once your vehicle stops, the ICC system keeps the vehicle stopped.
- When the vehicle traveling ahead moves to a different traveling lane, the ICC system accelerates and maintains vehicle speed up to the set speed. Maximum speed: 90 mph (144 km/h)

  The ICC system can only apply up to 40% of the vehicle's total braking power and should only be used when traffic conditions allow vehicle speeds to remain fairly constant. If acceleration is required over the ICC system, the driver may override using the accelerator pedal at any time. The system will not brake the vehicle during driver acceleration. The ICC system requires a lead vehicle if the speed is below approximately 15 mph (24 km/h). Vehicle must be traveling at 20 mph (30 km/h) to initially set the ICC system.

NOTE:

Brake lights of the vehicle come on when braking is performed by the ICC system. For additional information, see:

- **"Speed Adjust by Route — a feature of ProPILOT Assist with Navi-link (if so equipped)" (P. 376) which adjusts speed depending on road curvature in freeway interchanges and freeway curves.**
- **"Speed Limit Assist — a feature of ProPILOT Assist with Navi-link (if so equipped)" (P. 370) helps alert the driver of a speed limit change and can adjust vehicle set speed**

System operation

Basic Information

The ICC system can be set to one of two cruise control modes:

- Conventional (fixed speed) cruise control mode (P. 367)
- Intelligent Cruise Control — adaptive

NOTE:

Steering Assist is not available in conventional (fixed speed) cruise control.
For Intelligent Cruise Control without Steering Assist, activate ProPILOT Assist and then turn off Steering Assist by the switch or in the settings menu. For additional information, see "How to operate ProPILOT Assist" (P. 353) and "Steering Assist" (P. 378).
For conventional (fixed speed) cruise control, push and hold the ProPILOT Assist switch for longer than approximately 1.5 seconds then set your desired speed. For additional information, see Conventional (fixed speed) cruise control mode (P. 367).

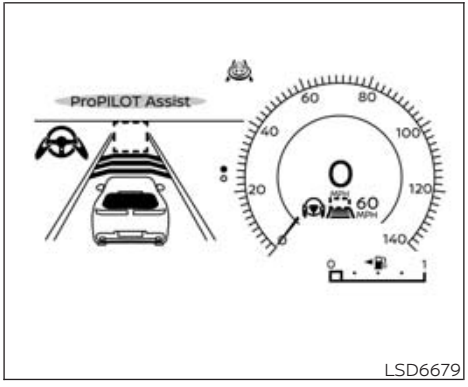

System set display — no vehicle detected ahead (for ProPILOT Assist 1.1)

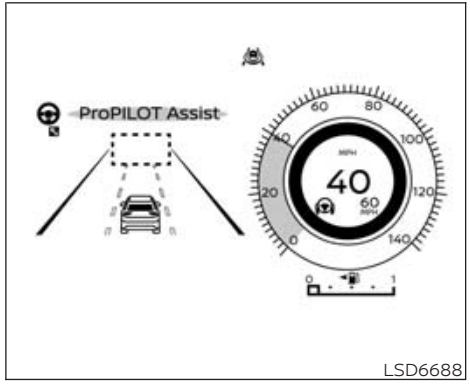

System set display — no vehicle detected ahead (for ProPILOT Assist 2.1)

If no vehicle ahead detected

The ICC system maintains the vehicle set speed, similar to standard cruise control, as long as no vehicle is detected in the lane ahead.

When a vehicle is no longer detected ahead, the vehicle will gradually accelerate to driver set speed.

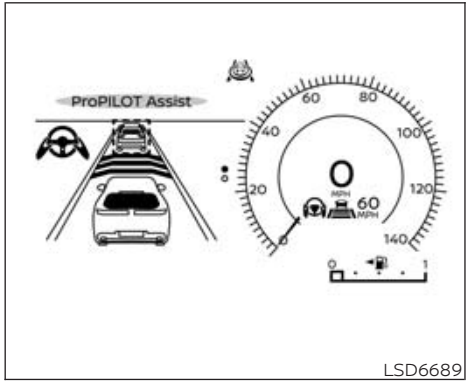

System set display — vehicle detected ahead (for ProPILOT Assist 1.1)

If vehicle ahead is detected

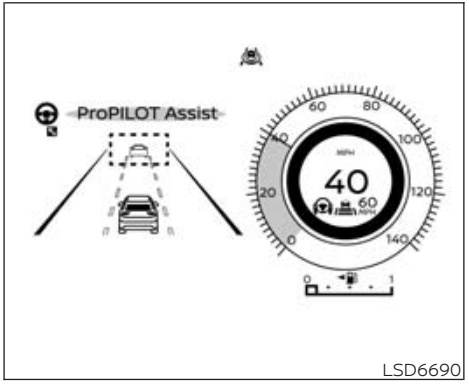

System set display — vehicle detected ahead (for ProPILOT Assist 2.1)

When a vehicle is detected in the lane ahead, the ICC system decelerates to the vehicle by controlling the throttle and applying the brakes to match the speed of the slower vehicle ahead and maintain the driver selected distance. For additional information, see "How to operate ProPILOT Assist" (P. 353).

If the vehicle ahead stops

When a vehicle ahead is detected and it gradually decelerates to a stop, your vehicle will decelerate to a standstill. When at a standstill, the "(RES±) Follow Vehicle Ahead" message is displayed on the vehicle information display.

- If the vehicle ahead stops and your vehicle is stopped less than approximately 30 seconds on the freeway, the "Follow Vehicle Ahead" message appears on the vehicle information display. When the vehicle ahead begins to move, your vehicle will start moving automatically.

To resume the ICC system after stop, push the RES± switch to either direction or lightly depress the accelerator pedal.

⚠ WARNING

If a vehicle cuts in after your vehicle was stopped by the ICC system, it cannot be detected depending on its position or direction. Your vehicle may approach the cut-in vehicle when restarting. Operate the brake pedal to maintain a safe distance to the vehicle ahead.

Cut-in detection

If a vehicle moves into your traveling lane near your vehicle, the ICC system may inform the driver by flashing the vehicle ahead detection indicator.

Passing a slower vehicle

When passing a slower vehicle on the left, the ICC system will temporarily accelerate to aid in the lane change. The system will not exceed set speed during a lane change.

Approach warning

If your vehicle comes closer to the vehicle ahead due to rapid deceleration of that vehicle or if another vehicle cuts in, the system warns the driver with the chime and ICC system display. Decelerate by depressing the brake pedal to maintain a safe vehicle distance if:

- The chime sounds.
- The vehicle ahead detection indicator blinks.
- You judge it necessary to maintain a safe distance.

The warning chime may not sound in some cases when there is a short distance between vehicles. Some examples are:

- When the vehicles are traveling at the same speed and the distance between vehicles is not changing.
- When the vehicle ahead is traveling faster and the distance between vehicles in increasing.

NOTE:

The approach warning chime may sound and the system display may flash when the radar sensor detects objects on the side of the vehicle or on the side of the road. This may cause the ICC system to decelerate or accelerate the vehicle The radar sensor may detect these objects when the vehicle is driven on winding, narrow, or hilly roads or when the vehicle is entering or exiting a curve. In these cases, you will have to manually control the proper distance ahead of you vehicle. Also, the sensor sensitivity can be affected by vehicle operation (steering maneuver or driving position in the lane) or traffic or vehicle conditions (for example, if a vehicle is being driven with some damage).

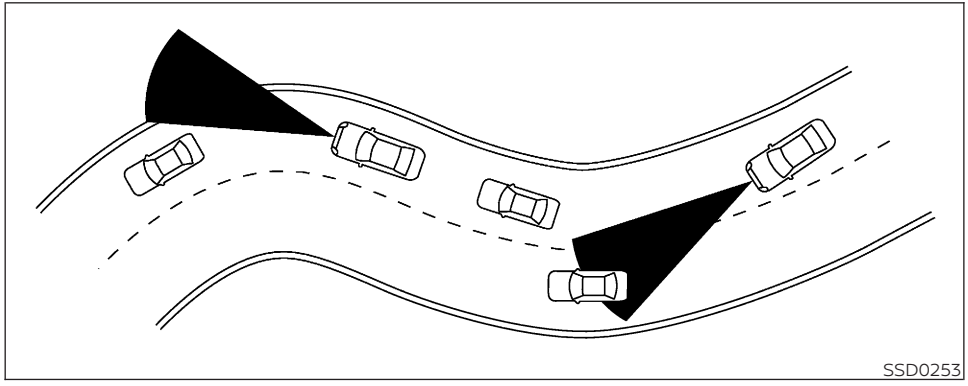

NOTE:

It is important to ensure the radar sensors, cameras and sonar sensors are clean before each drive. Unclean or damaged cameras and sensors, as well as environmental conditions can affect system performance.

Warnings and malfunctions

Under the following conditions, the ICC system is automatically canceled. A chime will sound and the system will not be able to be set:

- The vehicle ahead is not detected and your vehicle is traveling below the speed of 15 mph (24 km/h). For ProPILOT Assist 1.1 equipped vehicles on a limited access freeway as identified in the navigation map data, the ICC system cancels and a warning chime sounds if your vehicle is at a standstill for more than approximately 3 seconds and a vehicle is not detected ahead.
- Any door is open.
- The driver's seat belt is unfastened.
- Your vehicle has been stopped by the ICC system for approximately 3 minutes or longer.
- The transmission is shifted out of the D (Drive) or the manual shift mode.
- The electronic parking brake is applied.
- The SNOW mode is selected.
- The VDC system is turned off.
- The VDC system (including the traction control system) operates.
- A wheel slips.
- The AEB with Pedestrian Detection applied harder braking.
- When the radar signal is temporarily interrupted.

If limitations are considered, all conditions above are met and the ICC system is still not functioning properly.

CONVENTIONAL (fixed speed) CRUISE CONTROL MODE

Basic Information

NOTE:

ProPILOT Assist provides no approach warnings, automatic braking, or steering assist in the conventional (fixed speed) cruise control mode.

This mode allows driving at a speed between 20 to 90 mph (32 to 144 km/h) without keeping your foot on the accelerator pedal.

⚠ WARNING

- **In the conventional (fixed speed) cruise control mode, a warning chime does not sound to warn you if you are too close to the vehicle ahead, as neither the presence of the vehicle ahead nor the vehicle-to-vehicle distance is detected.**
- **Pay special attention to the distance between your vehicle and the vehicle ahead of you or a collision could occur.**
- **Always confirm the setting in the ICC system display.**
- **Do not use the conventional (fixed speed) cruise control mode when driving under the following conditions:**
  - **When it is not possible to keep the vehicle at a set speed**
  - **In heavy traffic or in traffic that varies in speed**
  - **On winding or hilly roads**
  - **On slippery roads (rain, snow, ice, etc.)**
  - **In very windy areas**
- **Doing so could cause a loss of vehicle control and result in an accident.**

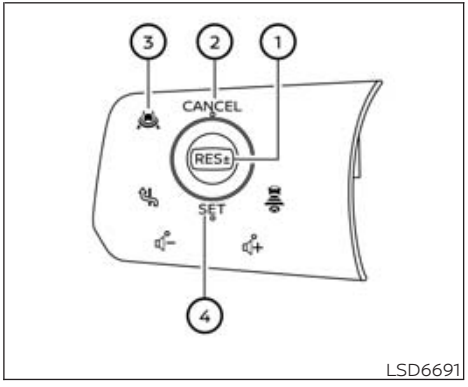

Conventional (fixed speed) cruise control switches

① RES± switch:
Resumes set speed or increases speed incrementally

② CANCEL switch:
Deactivates the system without erasing the set speed

③ ProPILOT Assist switch:
Turns the ProPILOT Assist system on or off

④ SET switch:
Sets desired cruise speed or reduces speed incrementally

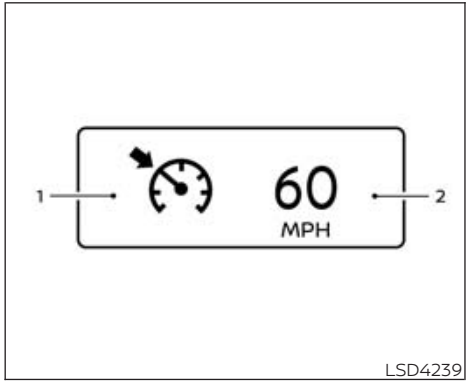

Conventional (fixed speed) cruise control mode display and indicators

The display is located in the vehicle information display.

1. Cruise indicator:
   This indicator indicates the condition of the Cruise Control system depending on a color.

- Cruise control ON indicator (white): Cruise Control standby
- Cruise control SET indicator (green): Indicates that the cruising speed is set
- Cruise control warning (yellow): Indicates that there is a malfunction in the Cruise Control system

2. Set vehicle speed indicator:
   This indicator indicates the set vehicle speed. For Canadian models, the speed is displayed in km/h.

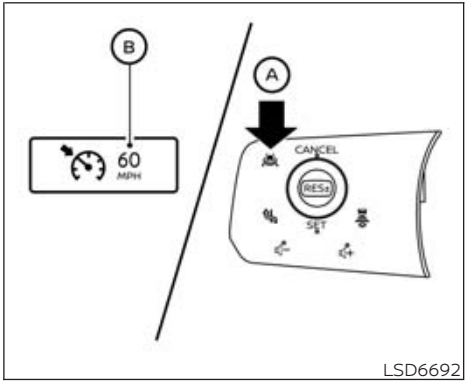

Operating conventional (fixed speed) cruise control mode

To turn on the conventional (fixed speed) cruise control mode, push and hold the ProPILOT Assist switch Ⓐ for longer than about 1.5 seconds.

When pushing the ProPILOT Assist switch on, the ICC system display turns on. After you hold the ProPILOT Assist switch on for longer than about 1.5 seconds, the ICC system display turns off. The cruise indicator Ⓑ appears. You can now set your desired

cruising speed. Pushing the ProPILOT Assist switch again will turn the system completely off. When the ignition switch is placed in the OFF position, the system is also automatically turned off.

To use the ICC system again, quickly push and release the ProPILOT Assist switch (vehicle-to vehicle distance control mode) or push and hold it (conventional cruise control mode) again to turn it on.

⚠ CAUTION

To avoid accidentally engaging cruise control, make sure to turn the ProPILOT Assist switch off when not using the ICC system.

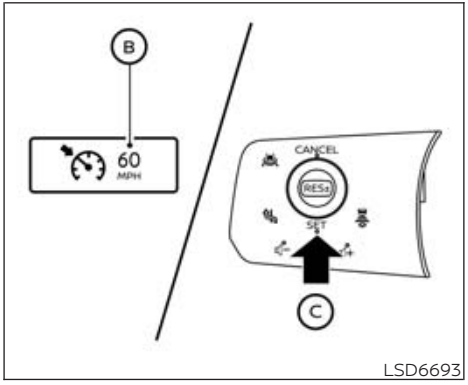

To set cruising speed, accelerate your vehicle to the desired speed, push the SET Ⓒ switch and release it. (The color of the cruise indicator changes to green and set vehicle speed indicator comes on.) Take your foot off the accelerator pedal. Your vehicle will maintain the set speed.

- To pass another vehicle, depress the accelerator pedal. When you release the pedal, the vehicle will return to the previously set speed.
- The vehicle may not maintain the set speed when going up or down steep hills. If this happens, manually maintain vehicle speed.

To cancel the preset speed, use any of the following methods:

1. Push the CANCEL switch. The vehicle speed indicator and the cruise indicator will turn grey.
2. Tap the brake pedal. The vehicle set speed indicator and the cruise indicator will turn grey.
3. Turn the ProPILOT Assist switch off. Both the cruise indicator and vehicle speed indicator will turn off.

To reset at a faster cruising speed, use one of the following three methods:

1. Depress the accelerator pedal. When the vehicle attains the desired speed, push and release the SET switch.
2. Push and hold the RES± switch. When the vehicle attains the desired speed, release the switch.
3. Push, then quickly release the RES± switch. Each time you do this, the set speed will increase by about 1 mph (1 km/h).

To reset at a slower cruising speed, use one of the following three methods:

1. Lightly tap the brake pedal. When the vehicle attains the desired speed, push the SET switch and release it.
2. Push and hold the SET switch. Release the switch when the vehicle slows down to the desired speed.
3. Push, then quickly release the SET switch. Each time you do this, the set speed will decrease by about 1 mph (1 km/h).

System temporarily unavailable

A chime sounds under the following conditions and the conventional (fixed speed) cruise control mode is automatically canceled.

- When the shift lever is not in the D (Drive) position
- When the parking brake is applied
- When the VDC system (including the traction control system) operates
- When the VDC system is turned off
- When a wheel slips
- When the vehicle speed decreases to less than 20 mph (32 km/h)

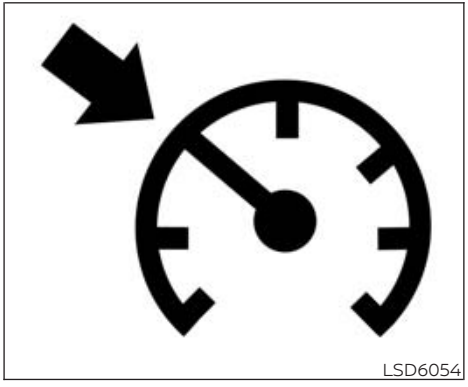

Warning

When the system is not operating properly, the chime sounds and the color of the cruise indicator will change to yellow.

Action to take:

If the color of the cruise indicator changes to yellow (cruise control warning), park the vehicle in a safe place. Turn the engine off, restart the engine, resume driving and then perform the setting again.

If it is not possible to set or the indicator stays on, it may indicate that the system is malfunctioning. Although the vehicle is still drivable under normal conditions, have the vehicle checked. It is recommended you visit a NISSAN dealer for this service.

SPEED LIMIT ASSIST - A FEATURE OF ProPILOT Assist WITH NAVI-LINK (if so equipped)

Basic Information

⚠ WARNING

Listed below are the system limitations for the Speed Limit Assist. Failure to operate the vehicle in accordance with these system limitations could result in serious injury or death:

- **It is the driver's responsibility to select the proper speed, follow all traffic regulations and observe other road users.**

- **The Speed Limit Assist may not operate properly and the actual speed limit may not be applied to the vehicle set speed in all conditions. The driver must manually control the vehicle speed.**
  Below are some examples:
  - **When the Traffic Sign Recognition (TSR) system is not functioning properly or turned off. (For additional information, see "Traffic Sign Recognition (TSR)" (P. 301).**
  - **When speed limit sign is faded, dirty or distorted.**
  - **When driving in countries or areas not covered by the Map locator system.**
  - **When crossing national boundaries.**
  - **When driving on the exit of the limited access freeway as identified in the navigation map data.**
  - **When driving in an area with nearby parallel roads (for example, freeway with a parallel service drive).**
  - **When driving in an area where each lane has a different speed limit sign.**
  - **When driving on a road under construction or in a construction zone.**
  - **When the data from the Map locator system is not up-to-date or is unavailable.**
  - **When the Map locator system cannot connect to server to get map information.**
  - **When software license of the Map locator system is expired.**

Speed Limit Assist is a feature of ProPILOT Assist Systems on vehicles equipped with a built-in Map locator system. Read the entire ProPILOT Assist and Traffic Sign Recognition sections before using this system.

When the ProPILOT Assist 1.1 (or 2.1) is active and it detects a change of the speed limit, the new speed limit is indicated and it can be applied to the vehicle set speed automatically or manually.

The Speed Limit Assist operates:

- When the detected speed limit is 20 mph (30 km/h) and above.
- The "Spd. Limit Assist" is enabled in the settings menu of the vehicle information display.

NOTE:

- **While the accelerator pedal is operated with AUTO mode selected, the Speed Limit Assist will function (automatically adjusts the vehicle set speed) only when the detected speed limit is faster than the vehicle set speed.**
- **In the following situations, the Speed Limit Assist will not operate:**
  - **When an increase in the posted speed limit is detected, but the vehicle set speed is already faster than the new speed limit.**
  - **When a decrease in the posted speed limit is detected, but the vehicle set speed is already lower than the new speed limit.**

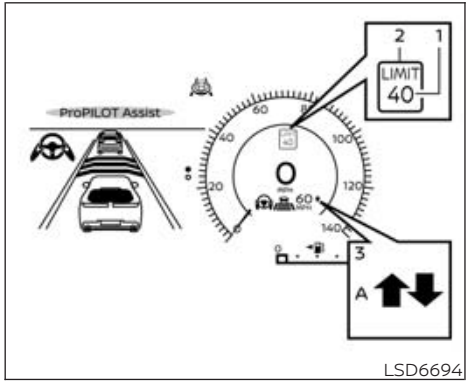

System display and indicators

1. Detected speed limit indicator

   Displays the currently detected speed limit. For additional information, see "Traffic Sign Recognition (TSR)" (P. 301).

2. Applied speed limit indicator (green frame)

   Indicates the detected speed limit can be applied to vehicle set speed.

3. Speed Limit Assist indicator

   Indicates the system activation mode or system operation.

" ⬆ " : Manual mode is activated and a new speed limit (faster speed value) is indicated.

" ⬇ " : Manual mode is activated and a new speed limit (lower speed value) is indicated.

"A" : Auto mode is activated.

Operating the system

When the system detects a different speed limit, the new speed value is indicated. The vehicle set speed can be changed to the indicated speed limit automatically or manually.

When Manual mode is selected on settings menu (factory default setting):

- To accept the newly indicated speed limit, push the RES± switch up (in case of speed limit up) or RES± switch down (in case of speed limit down).
- The Speed Limit Assist indicator (⬆ or ⬇) will turn off after approximately 10 seconds if the RES± switch is not operated. (The Speed Limit Assist indicator can be turned off immediately by operating the opposite switch from the direction indicated by the Speed Limit Assist indicator.)
- If no action is taken, the set speed will remain the same.
- If speed limit offset is on, this value will be added or subtracted from speed limit.

The system will not activate if a speed limit change is not detected.

When Auto mode is selected on the settings menu:

- The indicated speed limit is applied to the vehicle set speed automatically when on a limited access freeway as identified in the navigation map data. Also, if the ProPILOT Assist system is on, but not set (active), and a new speed limit is detected, the vehicle set speed is automatically updated.
- If speed limit offset is on, this value will be added or subtracted from speed limit.
- **Speed Limit Assist Setting:**
  - **Auto (A):** Speed Limit Automatically adopted
  - **Manual:** Speed Limit Request to accept
  - **Offset:** Adds/Subtracts 0-5 MPH (0-10 km/h)
  - **OFF:** Feature is OFF

The Auto mode may not be available in some regions or on roads other than limited access freeways. In this case, the system operates as the Manual mode.

NOTE:

Auto mode will not function in Hawaii or US island territories.

How to adjust Speed Limit Offset:

1. Press the button on the steering wheel until "Settings" appears in the vehicle information display, and press the OK button
2. Use the scroll dial to select "Driver Assistance" and then press the OK button.
3. Select "Intelligent Cruise", and press the OK button.
4. Select "Speed Limit Offset", press the OK button to select the offset value "-5 MPH (-10 km/h) to + 5 MPH (+10 km/h)"

How to activate or deactivate the system:

1. Press the button on the steering wheel until "Settings" appears in the vehicle information display, and press the OK button
2. Use the scroll dial to select "Driver Assistance" and then press the OK button.
3. Select "Intelligent Cruise", and press the OK button.
4. Select "Spd. Limit Assist", and press the OK button to select "Auto" or "Manual" to enable (not activate) the system. To deactivate the system, select "OFF".

Selecting Speed Limit Offset:

It is possible to set whether the speed limit should be accepted exactly, or with a tolerance of -5 MPH (-10 km/h) to +5 MPH (+10 km/h).

1. Press the button on the steering wheel until "Settings" appears in the vehicle Information display, and push the scroll dial.
2. Use the scroll dial to select "Driver Assistance". Then push the scroll dial.
3. Select "Intelligent Cruise", and press the OK button.
4. Select "Speed Limit Offset and push the scroll dial to select tolerance value. (Select "OFF" to turn off the function.)

NOTE:

The system will retain current settings in the vehicle information display even if the engine is restarted.

How to set tolerance for Speed Limit Offset:

1. Press the button on the steering wheel until "Settings" appears in the vehicle information display, and press the OK button.
2. Use the scroll dial to select "Driver Assistance". Then press OK button.
3. Use the scroll dial to select "Intelligent Cruise". Then press OK button.
4. Select "Speed Limit Offset", and press the OK button to select tolerance value.

NOTE:

The system will retain current settings in the vehicle information display even if the engine is restarted.

⚠ WARNING

Listed below are the system limitations for Speed Limit Assist. Failure to operate the vehicle in accordance with these system limitations could result in serious injury or death. It is driver's responsibility to select the proper speed, follow all traffic regulations and observe other road users.

- **Speed Limit Assist may not operate properly and the actual speed limit may not be applied to the vehicle set speed in all conditions. The driver must manually control the vehicle speed.**
  Below are some examples:
  - **When the Traffic Sign Recognition (TSR) system is not functioning properly or turned off. (For additional information, see "Traffic Sign Recognition (TSR)" (P. 301).**
  - **When speed limit sign is faded, dirty or distorted.**
  - **When driving in countries or areas not covered by the Map locator system.**
  - **When crossing national boundaries.**
  - **When driving on the exit of the limited access freeway as identified in the navigation map data.**
  - **When driving in an area with nearby parallel roads (for example, freeway with a parallel service drive).**
  - **When driving in an area where each lane has a different speed limit sign.**
  - **When driving on a road under construction or in a construction zone.**
  - **When the data from the Map locator system is not up-to- date or is unavailable.**
  - **When the Map locator system cannot connect to server to obtain the map data.**
  - **When the software license of the Map locator system is expired.**

System Temporarily Unavailable

Basic Information

The following are conditions in which the ICC system may be temporarily unavailable. In these instances, the ICC system may not cancel and may not be able to maintain the selected following distance from the vehicle ahead.

Condition A:

Under the following conditions, the ICC system is automatically canceled. A chime will sound and the system will not be able to be set::

- Any door is open.
- The driver's seat belt is not fastened.
- The vehicle ahead is not detected and your vehicle is traveling below the speed of 15 mph (24 km/h). For ProPILOT Assist with Navi link equipped vehicles on a limited access freeway as identified in the navigation map data, the ICC system cancels and a warning chime sounds if your vehicle is at a standstill for more than approximately 3 seconds and a vehicle is not detected ahead.

- Your vehicle has been stopped by the ICC system for approximately 3 minutes or longer.
- The shift lever is not in the D (Drive) position or manual shift mode.
- The electronic parking brake is applied.
- The VDC system is turned off.
- The AEB with Pedestrian Detection applies harder braking.
- VDC (including the traction control system) operates.
- The SNOW mode is selected.
- A wheel slips.
- When the front radar is impaired due to dirt or another obstruction blocking the radar sensor.
- When the radar signal is temporarily interrupted.

Action to take:

When the conditions listed above are no longer present, turn the system off using the ProPILOT Assist switch. Turn the ProPILOT Assist system back on to use the system.

NOTE:

When the ICC system is canceled under the following conditions at a standstill, the electronic parking brake is automatically activated:

- **Any door is open.**
- **The driver's seat belt is not fastened.**
- **Your vehicle has been stopped by the ICC system for approximately 3 minutes or longer.**
- **The shift lever is not in the D (Drive) position or manual shift mode.**
- **The VDC system is turned off.**
- **When distance measurement becomes impaired due to adhesion of dirt or obstruction to the sensor.**
- **When the radar signal is temporarily interrupted.**

Condition B:

When there is inclement weather (rain, fog, snow, etc.) blocking the front radar sensor, the ICC system will automatically be canceled, the chime will sound and the "Forward Driving Aids temporarily disabled Front Sensor blocked See Owner's Manual" warning message will appear in the vehicle information display.

Action to take:

When the conditions listed above are no longer present, the warning message will no longer be available in the vehicle information display and the system will operate normally. If the "Forward Driving Aids temporarily disabled Front Sensor blocked See Owner's Manual" warning message continues to be displayed, have the system checked. It is recommended that you visit an NISSAN dealer for this service.

Condition C:

When the radar sensor of the front bumper is covered with dirt or is obstructed, the ICC system will automatically be canceled.

The chime will sound and the "Forward Driving Aids temporarily disabled Front Sensor blocked See Owner's Manual" warning message will appear in the vehicle information display.

Action to take:

If the warning message appears, stop the vehicle in a safe place, press the park button to engage the P (Park) position, and turn the engine off. When the radar signal is temporarily interrupted, clean the sensor area of the front bumper and restart the

engine. If the "Forward Driving Aids temporarily disabled Front Sensor blocked See Owner's Manual" warning message continues to be displayed, have the system checked. It is recommended that you visit a NISSAN dealer for this service.

Condition D:

When driving on roads with limited road structures or buildings (for example, long bridges, deserts, snow fields, driving next to long walls), the system may display the "Forward Driving Aids temporarily disabled Front Sensor blocked See Owner's Manual" warning message and a chime will sound.

Action to take:

When the above driving conditions no longer exist, turn the system back on.

ICC system malfunction

If the ICC system malfunctions, it will be turned off automatically, a chime will sound, the "Malfunction See Owner's Manual" warning message will appear and the speed control status warning (orange) will illuminate.

Action to take:

If the warning light comes on, stop the vehicle in a safe place and press the park button to engage the P (Park) position. Turn the engine off, restart the engine and set the ICC system again. If it is not possible to set the ICC system or the indicator stays on, it may be a malfunction. Although the normal driving can be continued, the ICC system should be inspected. It is recommended that you visit a NISSAN dealer for this service.

SPEED ADJUST BY ROUTE - A FEATURE OF ProPILOT Assist WITH NAVI-LINK (if so equipped)

Basic Information

Speed Adjust by Route is a feature of ProPILOT Assist Systems on vehicles equipped with a built-in Map locator system. Read the entire ProPILOT Assist section before using this system, including how to operate the system and understanding the display. For additional information, see "ProPILOT Assist Systems" (P. 344.), "How to operate ProPILOT Assist" (P. 353) and "ProPILOT Assist displays and indicators" (P. 358).

⚠ WARNING

Listed below are the system limitations for the Speed Adjust by Route. Failure to operate the vehicle in accordance with these system limitations could result in serious injury or death:

- **There are limitations to the Speed Adjust by Route system capability. The system does not function in all driving, traffic, weather and road conditions. It is the driver's responsibility to stay alert, drive safely, and be in control of the vehicle at all times.**
- **The Speed Adjust by Route system does not brake the vehicle to a stop. Whenever necessary, the driver must apply appropriate braking.**
- **It is the driver's responsibility to select the proper speed, follow all traffic regulations and observe other road users.**
- **The Speed Adjust by Route system will not function in Hawaii or US Island territories.**

- **The Speed Adjust by Route may not operate properly in some road and traffic conditions, the system may unexpectedly change the speed. The driver must manually control the vehicle speed.**
- **Speed Adjust by Route will not work for an entrance or exit ramp.**
  Below are some examples:
  - **When the Map locator system cannot connect to the server to obtain the map data.**
  - **When the software license of the Map locator system is expired.**
  - **When the data from the Map locator system is not up-to-date or is unavailable.**
  - **When driving in countries or areas not covered by the Map locator system.**
  - **When driving on a road under construction or newly constructed road.**
  - **When driving near a road split or freeway interchange.**
  - **When driving in bad weather or poor road conditions.**

When the Speed Adjust by Route system is active on limited access freeways, the system uses road information provided by the Map locator system to adjust the vehicle speed depending on road curvature in freeway interchanges and freeway curves. The driver may need to apply additional braking at any time.

When the vehicle is through the freeway interchanges and freeway curves, the vehicle will accelerate again to the set speed.

NOTE:

- **The system does not operate when the accelerator pedal is depressed.**
- **The system may not operate depending on the set distance to the vehicle ahead and vehicles detected ahead.**
- **The system will retain current settings in the vehicle information display even if the engine is restarted.**
- **The Speed Adjust function will be activated when the Steering Assist with HD map data function is active, even if the Speed Adjust by Route feature has been disabled in the vehicle information display. For additional information, see "Steering Assist with HD map data (a feature of ProPILOT Assist 2.1)" (P. 381).**

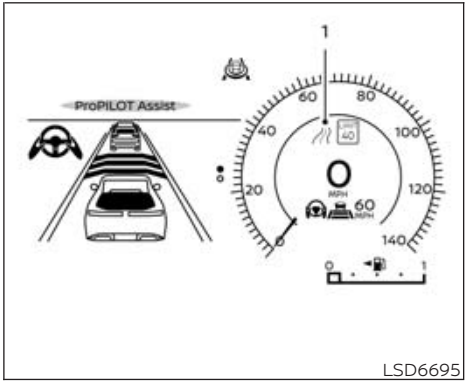

System display and indicators

1. Road information indicator

   Appears when the system adjusts the speed depending on turns.

-

  Freeway interchanges and freeway curves

How to activate or deactivate the system:

1. Press the ◀▶ button on the steering wheel until "Settings" appears in the vehicle information display, and press the OK button
2. Use the scroll dial to select "Driver Assistance" and then press the OK button.
3. Select "Speed Adjust by Route", and press the OK button to turn the system on or off.

NOTE:

The system will retain current settings in the vehicle information display even if the engine is restarted.

STEERING ASSIST

Basic Information

Steering Assist is a part of ProPILOT Assist Systems. Read the entire ProPILOT Assist section before using this system, including how to operate the system and understanding the display. (For more information, see "ProPILOT Assist Systems", "How to operate ProPILOT Assist" and "ProPILOT Assist displays and indicators".)

Steering Assist uses a forward facing camera to detect clear and consistent lane markings on both sides of the vehicle and is designed to help keep the vehicle in the center of traveling lane. Steering Assist is only available when combined with the Intelligent Cruise Control (ICC) system making up ProPILOT Assist.

Steering Assist can be activated when the following conditions are met:

- ProPILOT Assist is activated.
- Lane markings on both sides are clearly detected.
- Your vehicle is traveling at speed over 37 mph (60 km/h), or a vehicle is detected in front of you when traveling under 37 mph (60 km/h).
- The driver has hands on the steering wheel.
- The vehicle is driven at the center of the lane.
- Turn signals are not active.
- The windshield wipers are not operated in the high speed position.

When a curve or strong cross wind exceeds the capabilities of the system and your vehicle approaches the lane line, the Intelligent Lane Intervention (I-LI) system will activate. The I-LI system will have a visual and audible alert with steering vibration and will help assist the driver to return to the center of the lane. For additional information, see "Lane Departure Warning (LDW)/Intelligent Lane Intervention (I-LI)".

How to enable/disable Steering Assist:

Use the following methods to enable or disable Steering Assist:

- Press the ◀▶ button on the steering wheel until "Settings" displays in the vehicle information display.
- Use the scroll dial to select "Driver Assistance." Then press the OK button.
- Use the scroll dial to select "Lane Centering Assist" Then press the OK button.
- Use the scroll dial to select "Steering Assist" and then press the OK button to turn the system on or off.

NOTE:

Steering Assist setting will remain even after the engine is restarted.

NOTE:

It is important to ensure the radar sensors, cameras and sonar sensors are clean before each drive. Unclean or damaged cameras and sensors, as well as

environmental conditions can affect system performance. For additional information, see "Driver assistance troubleshooting guide".

Steering Assist temporary standby

Automatic standby due to driving operation (for ProPILOT Assist and ProPILOT Assist 1.1):

When the driver activates the turn signal, the Steering Assist is temporarily placed in a standby mode. (The Steering Assist restarts automatically when the operating conditions are met again.)

Automatic standby:

In the following cases, a double chime sounds and the Steering Assist is placed in a temporary standby mode. (The Steering Assist restarts automatically when the operating conditions are met again.)

- When the current traveling lane is too narrow to operate
- When a corner is too tight and the vehicle cannot stay in the traveling lane
- When lane markers on both sides are no longer detected
- When a vehicle ahead is no longer detected under approximately 37 mph (60 km/h)
- When strong light enters the camera unit (For example, the light directly shines on the front of the vehicle at sunrise or sunset)
- When the temperature of the camera is too high

Steering Assist cancel

Under the following conditions, the Steering Assist cancels, the chime sounds twice, the warning message appears, and the Steering Assist status indicator and the Steering Assist indicator turn off:

- When unusual lane markers appear in the traveling lane or when the lane marker cannot be correctly detected for some time due to certain conditions (for example, a snow rut, the reflection of light on a rainy day, the presence of several unclear lane markers).
- When the windshield wiper operates in the high speed operation (the Steering Assist is disabled when the wiper operates for more than approximately 10 seconds)

Action to take:

When the conditions listed above are no longer present, turn the Steering Assist on again using the Steering Assist switch.

Steering Assist malfunction

When the system malfunctions, it turns off automatically. The Steering Assist status warning (yellow) illuminates and the "Malfunction See Owner's Manual" warning message will appear in the vehicle information display. A chime may sound depending on the situation.

Action to take:

Stop the vehicle in a safe location, push the park button to shift to the P (Park) position, turn the engine off, restart the engine, resume driving, and set the ICC system again. If the warning (yellow) continues to illuminate, the Steering Assist is malfunctioning. Although the vehicle is still drivable under normal conditions, have the system checked. It is recommended that you visit a NISSAN dealer for this service.

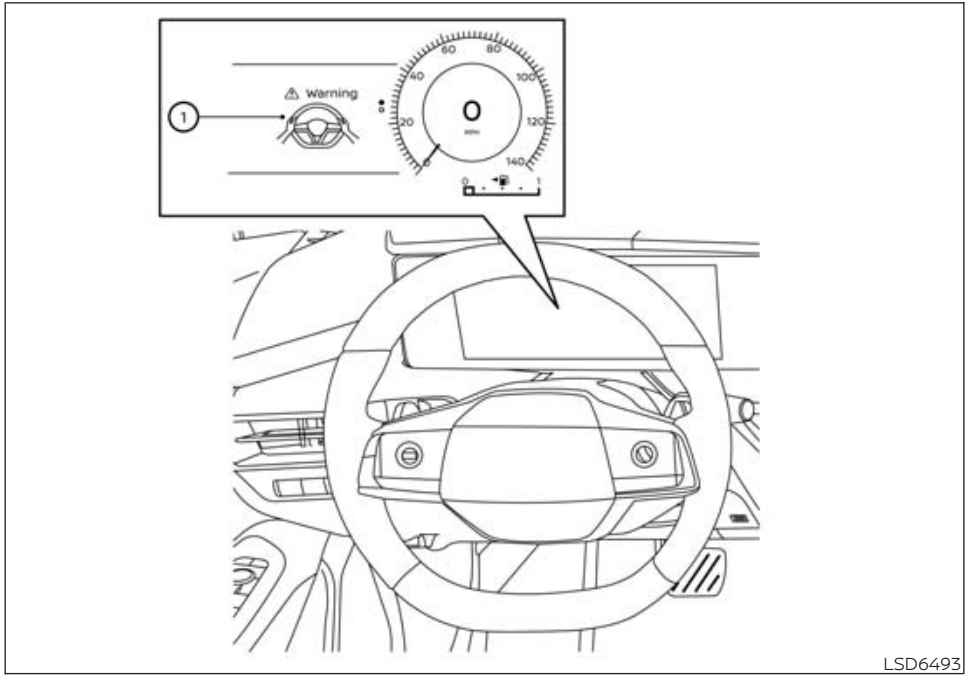

HANDS ON DETECTION

Basic information

When the Steering Assist is activated, it monitors the driver's steering wheel operation using a capacitive and torque sensor in the steering wheel. When ProPILOT Assist displays in hands on (green) mode, if the steering wheel is not operated or the driver takes their hands off the wheel for a period of time, the warning ① appears in the vehicle information display and the hands OFF warning light illuminates. For additional information, see "Warning and Emergency Stop" (P. 381) for escalating warnings if the system does not detect driver's hands on the wheel.

For vehicles equipped with ProPILOT Assist 2.1, hands on may be required (and detected) when Lane Change Assist or Passing Assist is operating or being activated, even if the ProPILOT Assist 2.1 mode indicator is blue. For additional information, see "Lane Change Assist" (P. 385) or "Passing Assist" (P. 388)

NOTE:

The system may not detect the driver's hand(s) on the steering wheel in the following conditions.

- **When the driver is wearing gloves.**
- **When a cover is put on the steering wheel.**

- **When the driver grips the seam of leather or spokes on the steering wheel.**
- **If hands are not detected by touch, it is recommended to provide steering torque.**

Warning and Emergency Stop

In Hands On (green) mode, the vehicle uses capacitative and torque sensors in the steering wheel to detect whether the driver has their hands placed on the steering wheel. It is the driver's responsibility to have hands on the wheel in order to avoid these increasing alerts.

- **First warning:**
  - Message appears in the vehicle information display alerting driving that hands are not detected.
  - Driver must place their hands back on the steering wheel or apply light torque to the steering wheel to clear the message.
- **Second Warning:**
  - Message begins to flash with escalating beeping sounds to draw driver's attention.
  - Driver must place their hands back on the steering wheel or apply light torque to the steering wheel to clear the message.
- **Third Warning:**
  - The vehicle will apply 2 brake pulses to alert the driver of failure to comply.
  - Driver must place their hands back on the steering wheel or apply light torque to the steering wheel to clear the message.
- **Emergency Stop:**
  - Emergency warning sound will play and a "Manually Steer" or "Take Steering Control" and/or "Emergency Stop" warning message will display.
  - The vehicle will gradually slow vehicle to a complete stop in the traveling lane and the hazard indicator lights will automatically activate when the vehicle reaches approximately 40 MPH (65 km/h).
  - After the vehicle is brought to an emergency stop, the vehicle is connected to the Emergency Call (SOS) service operator, who then requests relief from public institutions (police, fire department, medical institutions). For additional information, see "Emergency Call (SOS) button" (P. 152) for more details of the emergency support.
  - After the emergency stop function is activated, the Steering Assist function will be disabled with the "Steering Assist OFF" message displayed until the ignition switch has been switched off and on again.
  - Driver must place their hands back on the steering wheel or apply light torque to the steering wheel to deactivate the emergency stop.

STEERING ASSIST WITH HD MAP DATA (a feature of ProPILOT Assist 2.1)

On ProPILOT Assist 2.1 equipped vehicle, the ProPILOT Assist 2.1 mode indicator turns blue when the condition is met.

When ProPILOT Assist 2.1 activates with blue indicators, if traffic and other conditions and laws permit, and it is safe to do so, your hands can be taken off the steering wheel. Always pay attention to the road and the operation of the vehicle.

The driver can override with manual steering at any time. When ProPILOT Assist 2.1 is active, always be prepared to take immediate steering and braking.

For ProPILOT Assist 2.1 to activate with blue indicators, the following conditions must be met. The system may also cancel if any of these conditions are no longer met:

- ProPILOT Assist is active and the driver's hands are detected on the steering wheel.
- The vehicle is driving on a highway or limited access freeway as defined by the HD map data.
- Camera, radar, and GNSS sensors are functioning and free from obstruction or damage.
- The driver monitor system detects the driver's attention is given to the road ahead.
- All driving, road, and traffic conditions allow.
- Lane markings are clearly visible and able to be detected by the system.
- The vehicle is traveling at a speed less than 85 MPH (137 km/h).

⚠WARNING

It is the drivers responsibility to always drive in a legal manner and obey all local and state regulations.

Some local and state regulations may require hands to be kept on the steering wheel at all times. Only remove hands from the steering wheel it is safe to do so, and it is permitted by local and state regulations.

How to enable/disable Hands Off mode:

Vehicle information display

1. Press the ◀▶ button on the steering wheel until "Settings" displays in the vehicle information display.
2. Use the scroll dial to select "Driver Assistance." Then press the OK button.
3. Use the scroll dial to select "Lane Centering Assist." Then press the OK button.
4. Use the scroll dial to select "Hands Off Mode" and then press the OK button to turn the system on or off.

⚠WARNING

Immediately hold the steering wheel when the ProPILOT Assist 2.1 display changes to green. For additional information, see "Hands On Detection" (P. 380).

Steering Assist with HD map data is not available or may cancel if any of the following conditions are met, but not limited to:

- When the vehicle approaches the area near a toll gate, exit, junction, sharp curve, intersection or where the traveling lane merges.
- When the vehicle approaches an area that is not considered a highway or limited access freeway as defined by the HD map data, the HD map data is not available, or the system detects that the HD map data does not match the current roadway.
- When there is no reception of GNSS signals, including tunnels.
- When driving on a road not separated from the opposite lane.
- When depressing the accelerator pedal or actively using the steering wheel.
- A construction zone.
- When the driver monitor camera cannot recognize that the driver is driving with careful attention to the front.

- When the driver's face is not directed toward the road even if the gaze is directed forward.
- When the driver's face cannot be seen correctly from the camera installed on the steering column. it may occur when the face is blocked by the hand or when the driver is in a driving posture where the position of the face is difficult to see from the camera.
- When the shape of the mouth, nose, or face cannot be clearly seen due to wearing a mask, glasses, sunglasses, etc.
- When the driver narrows his or her eyes due to bright sunlight, etc.
- The windshield wipers are operated in high speed.
- The AEB with Pedestrian Detection and/or Lane Departure Warning (LDW) system activates.

NOTE:

- **For additional license information about HD map data, see "License information (ProPILOT Assist 2.1)" (P. 390).**
- **For additional information on HD maps, please visit below:**

  For U.S.:

  ProPILOT Assist 2.0 URL:

  https://www.nissanusa.com/experience-nissan/news-and-events/propilot-assist-2-0-driving-map.html

  ProPILOT Assist 2.1 URL:

  https://www.nissanusa.com/experience-nissan/news-and-events/propilot-assist-2-1-driving-map.html

  For Canada (English):

  https://www.nissan.ca/owners/propilot-assist.html

  For Canada (French):

  https://fr.nissan.ca/owners/propilot-assist.html
- **Steering Assist with HD map data will not function in Hawaii or US island territories.**

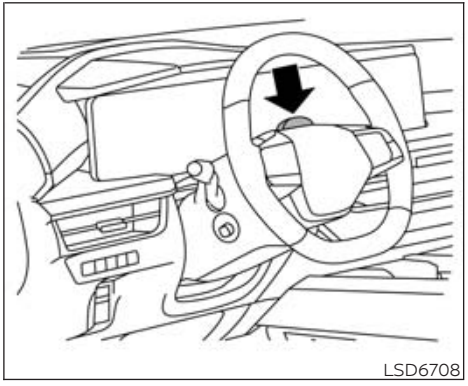
LSD6708

DRIVER MONITOR

Basic Information

ProPILOT Assist 2.1 monitors the driver's attention to the road ahead with a driver facing camera, located on the steering column. The system is looking for head position and direction, eye opening, and eye direction. If the system does not detect driver's attention on the road, a series of warnings will display in an effort to draw the driver's attention back forward.

NOTE:

The driver monitor is active in all driving modes, not just when ProPILOT Assist 2.1 is active.

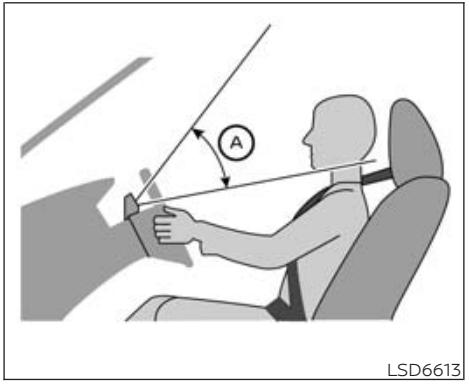

If the driver's face is below the camera's detection range Ⓐ, the driver monitor may not work properly. Adjust your face position so that the camera can detect your entire face, by lowering the steering column or raise the seat position, for example. For additional information, see "Steering wheel" (P. 211) and "Front power seat adjustment" (P. 13).

License information

The driver monitoring system includes soft- ware using open source software (OSS). License information can be found on the website below.

http://www.embedded-carmultimedia.jp/RTOS/License/oss/DMS_0401/

ATTENTION TO THE ROAD

On ProPILOT Assist 2.1 equipped vehicles, the vehicle uses a camera-based driver monitor system to determine if the driver is monitoring the road ahead. It is the driver's responsibility to pay attention in order to avoid these increasing alerts:

- **First warning:**
  - A beep and a message will appear to draw driver's attention toward the road.
  - Driver must look ahead to clear the message.
- **Second Warning:**
  - The message changes and request to hold the steering wheel.
  - Message flashes with escalating beeping sounds to draw driver's attention.

- Driver must place their hands back on the steering wheel or apply light torque to the steering wheel to clear the message.

- **Third Warning:**
  - Vehicle will apply 2 brake pulses to alert the driver of failure to comply.
  - Driver must place their hands back on the steering wheel or apply light torque to the steering wheel to clear the message.
- **Emergency Stop:**
  - Emergency warning sound will play and a "Manually Steer" and/or "Slowing to Stop" warning message will display.
  - The vehicle will gradually slow to a complete stop in the traveling lane and the hazard indicator lights will automatically activate when the vehicle reaches approximately 40 MPH (65 km/h).
  - After the vehicle is brought to an emergency stop, a "Manually Steer" message will display, the vehicle is connected to the Emergency Call (SOS) service operator, who then requests relief from public institutions (police, fire department, medical institutions). For additional information, see "Emergency Call (SOS) button" (P. 152) for more details of the emergency support.
  - After the emergency stop function is activated, the Steering Assist function will be disabled with the "Steering Assist OFF" message displayed until the ignition switch has been switched off and on again.
  - Driver must place their hands back on the steering wheel or apply light torque to the steering wheel to deactivate the emergency stop.

LANE CHANGE ASSIST

Basic information

Lane Change Assist is a feature of ProPILOT Assist 2.1. Read the entire ProPILOT Assist section before using this system, including how to operate the system and understanding the display. For additional information, see "ProPILOT Assist Systems" 344), "How to operate ProPILOT Assist" (P. 353) and "ProPILOT Assist displays and indicators" (P. 358).

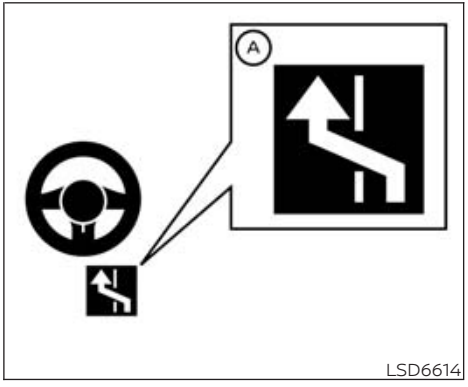

When ProPILOT Assist is active and the status indicator Ⓐ is illuminated in blue, Lane Change Assist helps the driver make a lane change when the turn signal is activated. The driver must place their hands on the steering wheel prior to the lane change maneuver and ensure safety throughout the lane change.

The Lane Change Assist status indicator will illuminate under the following conditions:

- When the ProPILOT Assist 2.1 display is blue (hands-off mode).
- When driving at speeds more than approximately 37 MPH (60 km/h).
- When driving on a road where there are more than two lanes.
- When either right or left, or both target lanes the vehicle moves to has dotted-white lines.
- When driving on a straight road or road with a gentle curve.
- When driving on a road where the speed limit is 45 MPH (70 km/h) or higher.
- When either the "Activate by turn signal" or "Passing Assist" is enabled.

Lane Change Assist may cancel or not be available under the following conditions:

- When driving on the road where there is a new freeway curves and freeway interchanges, which is not identified in the navigation map.
- When the "Lane Change Assist" is disabled in the settings menu of the vehicle information display (even if the Lane Change Assist status indicator illuminates in blue).
- When another vehicle is detected in the target lane.
- When lane markers are not longer detected.
- When the vehicle speed is below approximately 37 MPH (60 km/h).
- When the driver's hands are not detected on the steering wheel.
- When the ICC system/ProPILOT Assist is cancelled.
- When an obstacle is found near the lane marker in the direction of the target lane.

How to enable/disable Lane Change Assist:

Vehicle information display

1. Press the ◀▶ button on the steering wheel until "Settings" displays in the vehicle information display.
2. Use the scroll dial to select "Driver Assistance." Then press the OK button.
3. Use the scroll dial to select "Lane Change Assist." Then press the OK button.
4. Use the scroll dial to select "Activate by turn signal" and then press the OK button to turn the system on or off.

⚠ WARNING

Failure to follow the warnings and instructions for proper use of Lane Change Assist could result in serious injury or death.

- **Lane Change Assist only assists the driver to make a Lane change. The system does not steer the vehicle to avoid a collision. Be sure to keep your hands on the steering wheel and move safely to a different lane.**

NOTE:

The steering operation by the driver is always prioritized. If the driver's hands are not detected, it warns the driver to place their hands on the steering wheel. If hands are not detected in a timely manner, the Lane Change Assist feature will be cancelled.

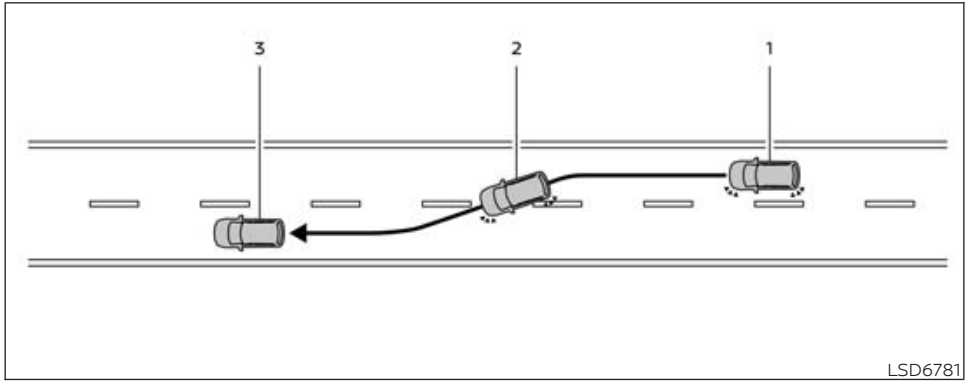

System operation

Before starting a lane change, ensure that the target lane is clear and it is safe to move into the lane.

1. Hold the steering wheel and activate the turn signal in the direction of moving.
2. The Lane Change Assist display appears and flashes green, and the system starts to assist the vehicle moving to the target lane by steering control.
3. When the lane change is completed, the turn signal cancels automatically*1. Then Steering Assist operates again.

   *1: Return the turn signal lever to the neutral position if it is latched.
4. Hands off (blue) mode will resume as soon as conditions are met.

The Lane Change Assist operation will be stopped (the Lane Change Assist display turns off):

- When the turn signal is operated to the opposite direction.
- When the turn signal lever is returned to the neutral position (only when the lever was latched to activate the turn signal) before the system starts to assist the vehicle moving into the target lane.
- When the steering wheel is operated.
- When a vehicle is detected in the target lane.
- When the lane markers are not longer detected.
- When the vehicle speed is below approximately 37 MPH (60 km/h).
- When the driver's hands are not detected on the steering wheel.
- When the ICC system/ProPILOT Assist is canceled.
- When the lane markers between both lanes are not dotted-white lines.
- When an obstacle is found near the lane marker in the direction of the target lane.
- When the Lane Change Assist operation is stopped within the lane where the system starts to operate, the system will control the steering wheel to return the vehicle to the center of the lane.

Limitations

For system limitations, see "Limitations" (P. 387).

PASSING ASSIST

Basic information

Passing Assist is a feature of ProPILOT Assist 2.1. Read the entire ProPILOT Assist section before using this system, including how to operate the system and understanding the display. For additional information, see "ProPILOT Assist Systems" (P. 344), "How to operate ProPILOT Assist" (P. 353) and "ProPILOT Assist displays and indicators" (P. 358). Passing Assist also uses Lane Change Assist features. For additional information, see "Lane Change Assist" (P. 385).

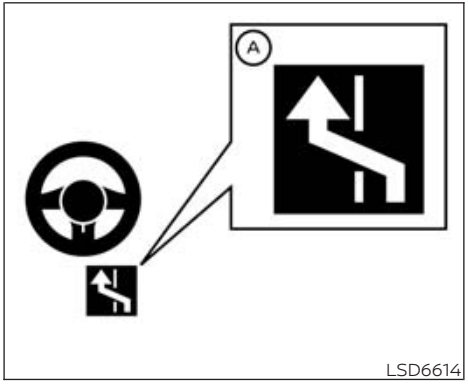

LSD6614

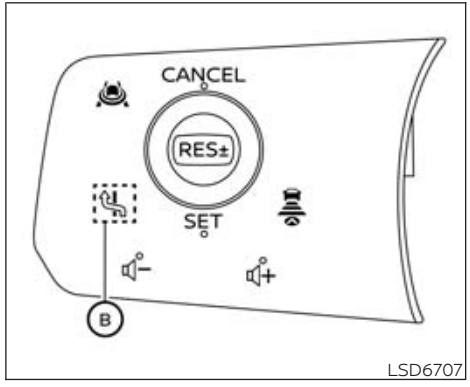

LSD6707

When ProPILOT Assist is active and the status indicator Ⓐ is illuminated in blue, Passing Assist will help the driver to overtake a slower vehicle by:

1. Notifying the driver of slower vehicle by suggesting to pass on the left when no vehicles are detected in blind spot.
2. Assist in lane change with Lane Change Assist after the driver's acceptance by the Lane Change Assist switch Ⓑ on the steering wheel.

⚠ WARNING

Driver is responsible to move out of passing lane as laws require.

All conditions must be met in order for Passing Assist to operate:

- ProPILOT Assist must be active.
- The Lane Change Assist status indicator illuminates in blue. For additional information, see "Lane Change Assist" (P. 385).
- No vehicle is detected in the intended lane.
- Lane markers are detected.
- Vehicle speed is above approximately 37 MPH (60 km/h).
- Driver's hands must be detected on the steering wheel.
- Passing Assist is enabled.

The vehicle will suggest to pass when the slower lead vehicle is detected traveling at the following speeds:

- **Sport:**
  - When the lead vehicle is 3 MPH (5 km/h) + slower
- **Standard:**
  - When the lead vehicle is 6 MPH (10 km/h) + slower
- **Comfort:**
  - When the lead vehicle is 9 MPH (15 km/h) + slower

When the following conditions are met, the system suggests the driver to move to the right lane.

- When your vehicle keeps traveling in the overtaking lane.
- The Lane Change Assist indicator is blue.
- When there is no vehicle in the right lane.

NOTE:

The steering operation by the driver is always prioritized.

How to enable/disable Passing Assist:

Vehicle information display

1. Press the ◀▶ button on the steering wheel until "Settings" displays in the vehicle information display.
2. Use the scroll dial to select "Driver Assistance." Then press the OK button.
3. Use the scroll dial to select "Lane Change Assist." Then press the OK button.
4. Use the scroll dial to select "Passing Assist" and then press the OK button to turn the system on or off.

How to change Passing Assist mode:

Vehicle information display

1. Press the ◀▶ button on the steering wheel until "Settings" displays in the vehicle information display.
2. Use the scroll dial to select "Driver Assistance." Then press the OK button.
3. Use the scroll dial to select "Lane Change Assist." Then press the OK button.
4. Use the scroll dial to select "Passing Setting" and then press the OK button to select Sport, Standard or Comfort mode.

System operation

1. When a slower vehicle is detected ahead, the message "Slow Vehicle Ahead Change Lanes Left" appears.
2. Ensure that it is safe to move into the left lane, hold the steering wheel and push the Lane Change Assist switch on the steering wheel. The turn signal starts flash immediately.
   - If the blind spot is clear, the vehicle will proceed to step 3.

- If a vehicle is detected in the blind spot, the system will search for a space for approximately 30 seconds. If no space is created in this time, the system will cancel.
- If the driver's hands are not detected on the steering wheel, the system will issue a warning. If their hands are not placed on the steering wheel in a timely manner, Lane Change Assist may cancel.

3. The Lane Change Assist display flashes green. The system starts to assist the vehicle moving into the left lane by steering control.
4. When the lane change is completed, the turn signal cancels automatically. Then Steering Assist operates again.
5. Hands off (blue) mode will resume as soon as conditions are met.

To stop Passing Assist operation:

The Passing Assist operation will be stopped (the Lane Change Assist display turns off):

- When the turn signal is operated in the opposite direction of the lane change.
- When the steering wheel is operated.
- When a vehicle is detected in the target lane after the turn signal is operated.
- When the lane markers are not longer detected.
- When the vehicle speed is below approximately 37 MPH (60 km/h).
- When the driver's hands are not detected on the steering wheel.
- When the ICC system/ProPILOT Assist is canceled.
- When the vehicle to be overtaken accelerates or changes lanes
- When an obstacle is found near the lane marker in the direction of the target lane after the turn signal is operated.

The turn signal also cancels automatically after the Passing Assist operation is stopped. When the Passing Assist operation is stopped within the lane where the system starts to operate, the system will assist the driver to return the vehicle to the center of the lane.

Limitations

For system limitations, see "Limitations" (P. 390).

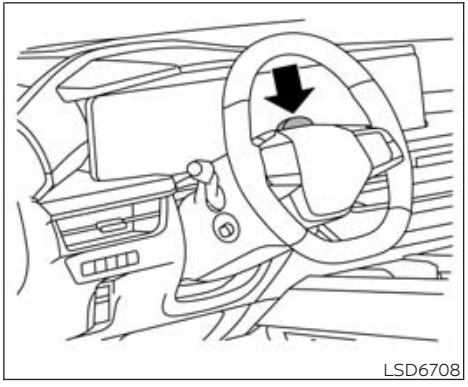
LSD6708

SYSTEM MAINTENANCE

Keep the driver monitor area clean. Remove dirt and wipe it off with clean, soft cloth such as lens cleaner.

LICENSE INFORMATION (ProPILOT Assist 2.1)

3D HD MAP data process includes software using open source (OSS) and algorithm. The license information is printed in the web sites below.

http://www.embedded-carmultimedia.jp/RTOS/License/oss/HDL_0101/

http://www.embedded-carmultimedia.jp/RTOS/License/oss/HDL_0102/

http://www.embedded-carmultimedia.jp/RTOS/License/lib/HDL_0121/

License information of 3D HD MAP data is as follows:

TERMS OF USE OF USHR INC. MATERIAL AND AGREEMENT TO END USER SUB- LICENSE AGREEMENT

This vehicle contains data, software, Intellectual Property or a portion thereof, and Confidential Information or a portion thereof that is incorporated into the driver assistance systems of this vehicle and which is subject to a license with Ushr Inc. (the "Ushr Materials"). Any use of the Ushr Mate- rials or systems incorporating them constitute your agreement to these Terms of Use and to the terms and conditions of the End User Sub-License Agreement as fully stated on Ushr Inc.'s website, available at www.ushrauto.com/legal and which are expressly incorporated by reference herein. If you do not agree to these Terms of Use and to the End User Sub-License Agreement ("license"), do not use the Ushr Materials. The license affects your legal rights and relates to the following, among other things, your agreement to abide by the permissions and prohibitions as to the use of the Ushr Materials; that the Ushr Materials are provided on an AS IS basis and WITHOUT WARRANTY OF ANY KIND; Ushr's limitations on liabilities, Ushr's reservation of all rights in and the protection of its intellectual property and confidential information; and YOUR WAIVER OF A RIGHT TO A JURY TRIAL AND AGREEMENT TO ARBITRATE ANY CLAIMS ON THE TERMS SET FORTH IN THE LICENSE.

This product incorporates material, including Licensed Materials, Intellectual Property and/or Confidential Information, subject to a license with Ushr Inc. (the "Ushr Materials"). The Ushr Materials are defined in and subject to the terms of a license agreement with Ushr Inc. It is strictly prohibited to extract, derive, reproduce and/or transfer all or part of the Ushr Materials, in any form and in any manner, without the prior written consent of Ushr Inc.

©2022 Ushr Inc. All Rights Reserved.

"Ushr", the Ushr logo, "Ushr Auto", and www.ushrauto.com are the intellectual property of Ushr Inc. and it reserves all rights in these marks.

©OpenStreetMap contributors, www.openstreetmap.org/copyright.

RADIO FREQUENCY STATEMENT

For USA

This device complies with Part 15 of the FCC Rules.

Operation is subject to the following two conditions:

1. this device may not cause harmful interference, and
2. this device must accept any interference received, including interference that may cause undesired operation.

Changes or modifications made to this equipment not expressly approved by Robert BOSCH GmbH may void the FCC authorization to operate this equipment.

This equipment has been tested and found to comply with the limits for a Class A digital device, pursuant to Part 15 of the FCC Rules. These limits are designed to provide reasonable protection against harmful interference when the equipment is operated in a commercial environment. This equipment generates, uses, and can radiate radio frequency energy and, if not installed and used in accordance with the instruction manual, may cause harmful interference to radio communications.

Operation of this equipment in a residential area is likely to cause harmful interference in which case the user will be required to correct the interference at his own expense.

Radiofrequency radiation exposure information:

This equipment complies with FCC radiation exposure limits set forth for an uncontrolled environment. This equipment should be installed and operated with minimum distance of 20 cm between the radiator and your body.

The transmitter must not be co-located or operating in conjunction with any other antenna or transmitter.

For Canada

Legal warning for RF equipment:

This device contains licence-exempt transmitter(s)/receiver(s) that comply with Innovation, Science and Economic Development Canada's licence-exempt RSS(s). Operation is subject to the following two conditions: (1) This device may not cause harmful interference. (2) This device must accept any interference received, including interference that may cause undesired operation of the device.

BASIC INFORMATION

⚠WARNING

Failure to follow the warnings and instructions for proper use of the RAB system could result in serious injury or death.

- **The RAB system is a supplemental aid to the driver. It is not a replacement for proper driving procedures. Always use the side and rear mirrors and turn and look in the direction you will move before and while backing up. Never rely solely on the RAB system. It is the driver's responsibility to stay alert, drive safely, and be in control of the vehicle at all times.**
- **There is a limitation to the RAB system capability. The RAB system is not effective in all situations.**
- **Inclement weather or ultrasonic sources such as an automatic car wash, a truck's compressed-air brakes or a pneumatic drill may affect the function of the system, this may include reduced performance or a false activation.**

The RAB system can assist the driver when the vehicle is backing up and approaching objects directly behind the vehicle.

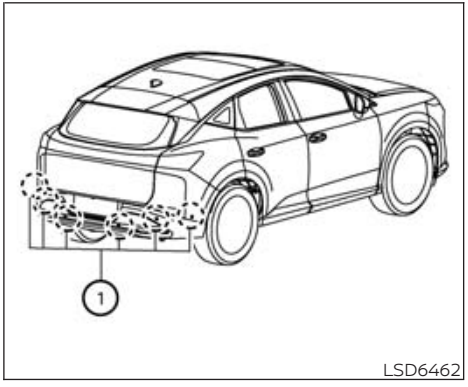

LSD6462

The RAB system detects obstacles behind the vehicle using the parking sensors ① located on the rear bumper.

NOTE:

You can temporarily cancel the sonar function and the RAB system in the vehicle. For additional information, please see "Front and rear sonar system" (P. 439).

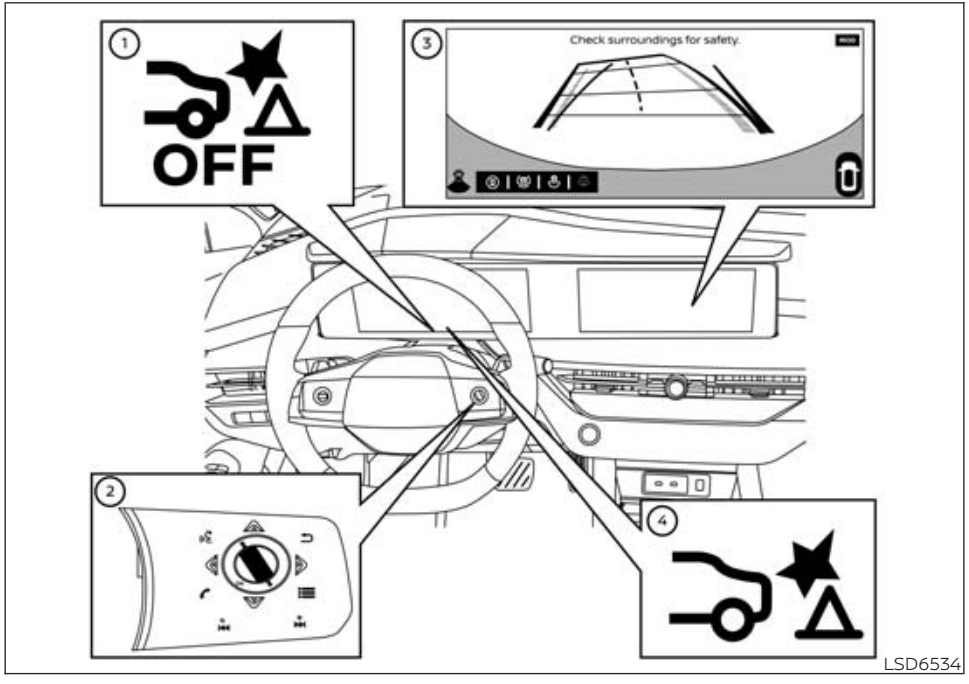

RAB SYSTEM OPERATION

① RAB system warning light

② Steering-wheel-mounted controls (right side)

③ Center display

④ RAB system indicator

When the shift position is in the R (Reverse) position and the vehicle speed is less than approximately 9 mph (15 km/h), the RAB system operates.

If a risk of a collision with an obstacle is detected when your vehicle is backing up, the RAB system warning indicator will flash in the vehicle information display, a red frame will appear in the center display (for vehicles with the Intelligent Around View® Monitor system), and the system will chime three times. The system will then automatically apply the brakes. After the automatic brake application, the driver must depress the brake pedal to maintain brake pressure.

NOTE:

- **The brake lights of the vehicle come on when braking is performed by the RAB system.**
- **When the brakes operate, a noise may be heard. This is not a malfunction.**

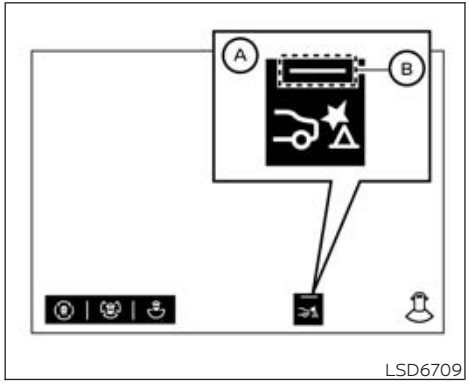

Example

HOW TO TEMPORARILY CANCEL THE RAB SYSTEM

The Front and Rear Sonar system can be temporarily turned on/off by touching the RAB temporary ON/OFF key Ⓐ on the touch-screen display. When the RAB system is on, the indicator Ⓑ illuminates.

NOTE:

- **The indicator Ⓑ will turn off and a warning message will be displayed only when the customer turns off the RAB system intentionally. If the RAB system is disabled due to a system malfunction or deactivation of the Vehicle Dynamic Control (VDC) system, the indicator Ⓑ will not turn off and no warning message will be displayed.**
- **The RAB system will be automatically turned on when the engine is restarted.**

RAB SYSTEM LIMITATIONS

⚠WARNING

Listed below are the system limitations for the RAB system. Failure to follow the warnings and instructions for proper use of the RAB system could result in serious injury or death.

- **When the vehicle approaches an obstacle while the accelerator or brake pedal is depressed, the function may not operate or the start of operation may be delayed. The RAB system may not operate or may not perform sufficiently due to vehicle conditions, driving conditions, the traffic environment, the weather, road surface conditions, etc. Do not wait for the system to operate. Operate the brake pedal by yourself as soon as necessary.**
- **If it is necessary to override RAB operation, strongly press the accelerator pedal.**
- **Always check your surroundings and turn to check what is behind you before and while backing up. The RAB system detects stationary objects behind the vehicle. The RAB system does not detect the following objects:**
  - **Moving objects**
  - **Low objects**
  - **Narrow objects**
  - **Wedge-shaped objects**
  - **Objects close to the bumper (less than approximately 1 ft [30 cm])**
  - **Objects that suddenly appear**
  - **Thin objects such as rope, wire, chain, etc.**
- **The RAB system may not operate for the following obstacles:**
  - **Obstacles located high off the ground**
  - **Obstacles in a position offset from your vehicle**

- Obstacles, such as spongy materials or snow, that have soft outer surfaces and can easily absorb a sound wave

- The RAB system may not operate in the following conditions:
  - There is rain, snow, ice, dirt, etc., attached to the sonar sensors.
  - A loud sound is heard in the area around the vehicle.
  - The surface of the obstacle is diagonal to the rear of the vehicle.
- The RAB system may unintentionally operate in the following conditions:
  - There is overgrown grass in the area around the vehicle.
  - There is a structure (e.g., a wall, toll gate equipment, a narrow tunnel, a parking lot gate) near the side of the vehicle.
  - There are bumps, protrusions, or manhole covers on the road surface.
  - The vehicle drives through a draped flag or a curtain.
  - The vehicle is approaching a high curb or car stop.
  - There is an accumulation of snow or ice behind the vehicle.
  - An ultrasonic wave source, such as another vehicle's sonar, is near the vehicle.
- Once the automatic brake control operates, it does not operate again if the vehicle approaches the same obstacle.
- The automatic brake control can only operate for a short period of time. Therefore, the driver must depress the brake pedal.
- In the following situations, the RAB system may not operate properly or may not function sufficiently:
  - The vehicle is driven in bad weather (rain, fog, snow, etc.).
  - The vehicle is driven on a steep hill.
  - The vehicle's posture is changed (e.g., when driving over a bump).
  - The vehicle is driven on a slippery road.
  - The vehicle is turned sharply by turning the steering wheel fully.
  - Snow chains are used.
  - Wheels or tires other than NISSAN recommended are used.
  - The brakes are cold at low ambient temperatures or immediately after driving has started.
  - The braking force becomes poor due to wet brakes after driving through a puddle or washing the vehicle.
- Turn the RAB system off in the following conditions to prevent the occurrence of an unexpected accident resulting from sudden system operation:
  - The vehicle is towed.
  - The vehicle is carried on a flatbed truck.
  - The vehicle is on the chassis dynamometer.
  - The vehicle drives on an uneven road surface.
  - The vehicle is towing an object (if so equipped).

- **Suspension parts other than those designated as Genuine NISSAN parts are used. (If the vehicle height or the vehicle body inclination is changed, the system may not detect an obstacle correctly.)**
- **If the vehicle is using an accessory like a bike rack, or cargo carrier that blocks the sensors.**

- **Excessive noise (e.g., audio system volume, an open vehicle window) will interfere with the chime sound, and it may not be heard.**

SYSTEM TEMPORARILY UNAVAILABLE

Condition A

When the Vehicle Dynemic Control (VDC) system is off, the RAB system warning light will illuminate.

Action to take

When the VDC system is on, the RAB system will resume automatically.

SYSTEM MALFUNCTION

If the RAB system malfunctions, it will be turned off automatically, a chime will sound and the "Malfunction See Owner's Manual" warning message and the RAB system warning light will appear in the vehicle information display.

Action to take:

If the warning light illuminates, park the vehicle in a safe location, turn the engine off, and restart the engine. If the warning light continues to illuminate, have the RAB system checked. It is recommended that you visit a NISSAN dealer for this service.

NOTE:

If the RAB system cannot be operated temporarily, the RAB system warning light blinks.

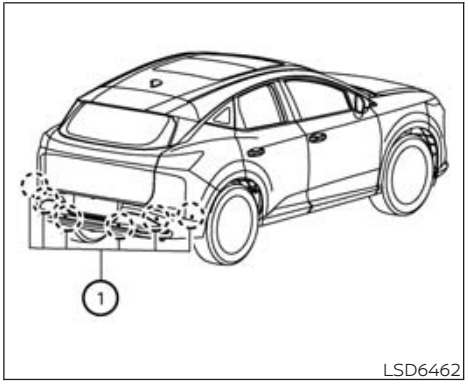

LSD6462

SYSTEM MAINTENANCE

Observe the following items to ensure proper operation of the system:

- Always keep the parking sensors ① clean.
- If the parking sensors are dirty, wipe them off with a soft cloth while being careful to not damage them.

- Do not subject the area around the parking sensors ① to strong impact. Also, do not remove or disassemble the parking sensors. If the parking sensors and peripheral areas are deformed in an accident, etc., have the sensors checked. It is recommended that you visit a NISSAN dealer for this service.
- Do not install any stickers (including transparent stickers) or accessories on the parking sensors ① and their surrounding areas. This may cause a malfunction or improper operation.

AUTOMATIC EMERGENCY BRAKING (AEB) WITH PEDESTRIAN DETECTION

BASIC INFORMATION

⚠WARNING

Failure to follow the warnings and instructions for proper use of the AEB with Pedestrian Detection system could result in serious injury or death.

- **The AEB with Pedestrian Detection system is a supplemental aid to the driver. It is not a replacement for the driver's attention to traffic conditions or responsibility to drive safely. It cannot prevent accidents due to carelessness or dangerous driving techniques.**
- **The AEB with Pedestrian Detection system does not function in all driving, traffic, weather and road conditions.**

The AEB with Pedestrian Detection system can assist the driver when there is a risk of a forward collision with the vehicle ahead in the traveling lane or with a pedestrian ahead in the traveling lane.

Junction assist can assist the driver:

- When there is a risk of a forward collision.
- When you turn right or left and cross the path of an oncoming vehicle.
- When you turn right or left, a pedestrian is detected in the forward direction and is expected to enter your vehicle's path.

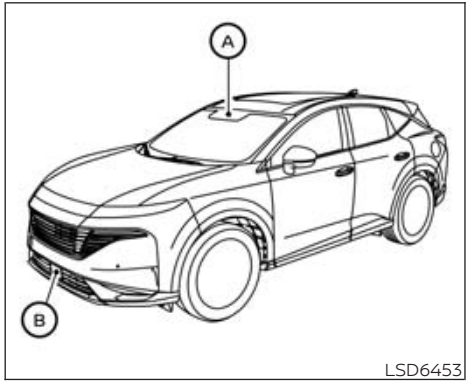

The AEB with Pedestrian Detection system uses a radar sensor located on the front of the vehicle Ⓑ to measure the distance to the vehicle ahead in the same lane. For pedestrians, the AEB with Pedestrian Detection system uses a camera installed behind the windshield Ⓐ in addition to the radar sensor.

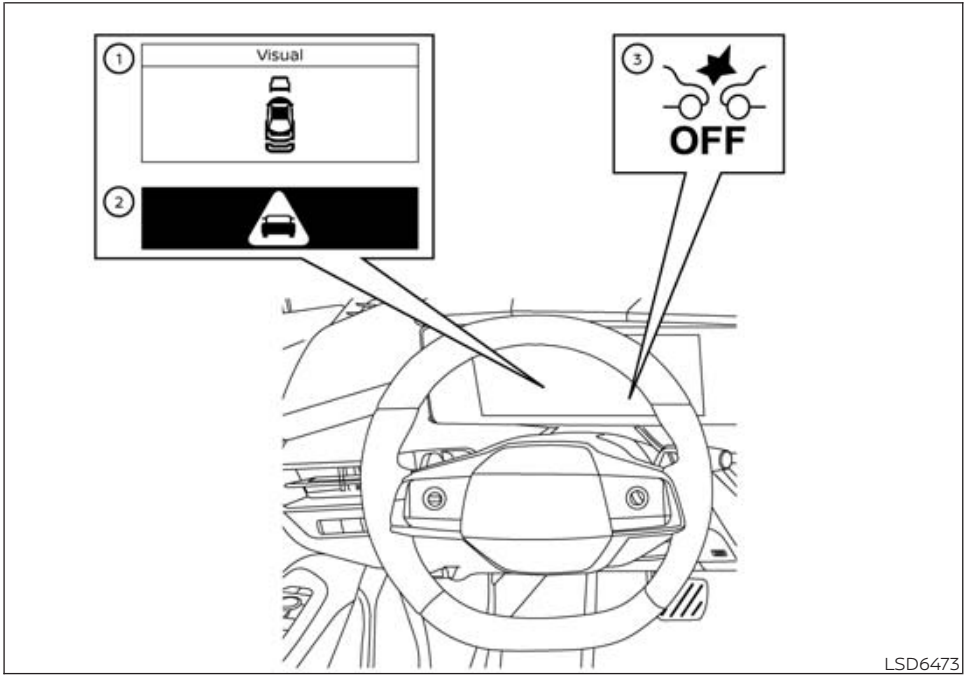

AEB WITH PEDESTRIAN DETECTION SYSTEM OPERATION

① Vehicle ahead detection indicator

② AEB with Pedestrian Detection emergency warning indicator

③ AEB with Pedestrian Detection system warning light

The AEB system operates at speeds above approximately 3 mph (5 km/h). For the pedestrian detection function, the system operates at speeds between 6 – 50 mph (10 – 80 km/h).

Junction assist operates at your vehicle speeds between 6 — 16 mph (10 — 25 km/h).

When turning left or right, the turn signal must be activated to ensure that oncoming vehicles can be detected by the Junction Assist.

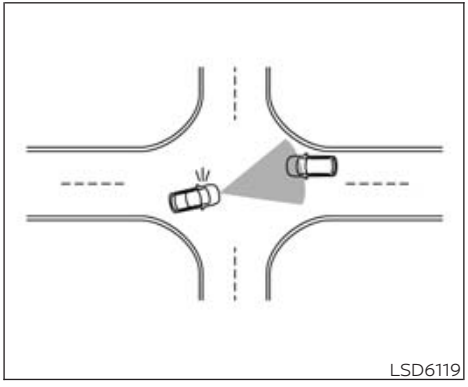

Junction assist for oncoming vehicle

The vehicle's stop lights come on when braking is performed by the AEB with Pedestrian Detection system.

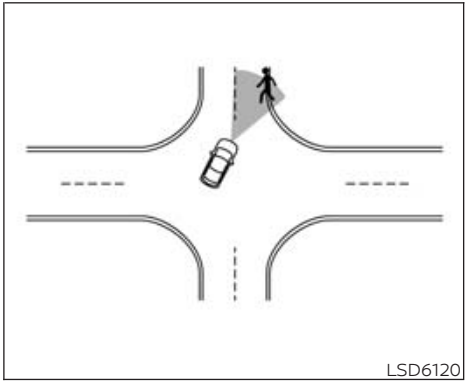

Junction assist for pedestrian

When the AEB with Pedestrian Detection system detects an obstacle in the path of the vehicle and displays the AEB with Pedestrian Detection system warning, a noise may be heard from the front of the vehicle as the vehicle primes the brakes to improve response time.

If a risk of a forward collision is detected, the AEB with Pedestrian Detection system will firstly provide the warning to the driver by flashing the vehicle ahead detection indicator (yellow) in the vehicle information display and providing an audible alert. If the

driver applies the brakes quickly and forcefully after the warning, and the AEB with Pedestrian Detection system detects that there is still the possibility of a forward collision, the system will automatically increase the braking force.

If the driver does not take action, the AEB with Pedestrian Detection system issues the second visual (flashing) (red and white) and audible warning. If the driver releases the accelerator pedal, then the system applies partial braking. If the risk of a collision becomes imminent, the AEB with Pedestrian Detection system applies harder braking automatically.

While the AEB with Pedestrian Detection system is operating, you may hear the sound of brake operation. This is normal and indicates that the AEB with Pedestrian Detection system is operating properly.

NOTE:

The vehicle's brake lights come on when any braking is performed by the AEB with Pedestrian Detection system.

Depending on vehicle speed and distance to the vehicle or pedestrian ahead, as well as driving and roadway conditions, the system may help the driver avoid a forward collision or may help mitigate the consequences if a collision should be unavoidable. If the driver is handling the steering wheel, accelerating or braking, the AEB with Pedestrian Detection system will function later or will not function.

The automatic braking will cease under the following conditions:

- When the steering wheel is turned to avoid a collision.
- When the accelerator pedal is depressed.
- When there is no longer a vehicle or a pedestrian detected ahead.

If the AEB with Pedestrian Detection system has stopped the vehicle, the vehicle will remain at a standstill for approximately 2 seconds before the brakes are released.

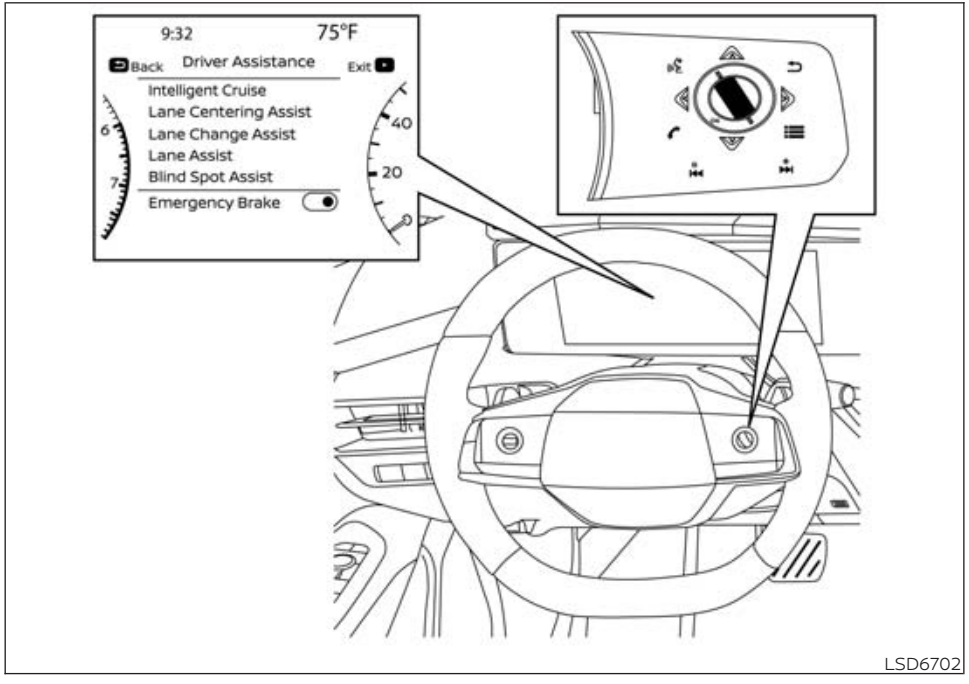

TURNING THE AEB WITH PEDESTRIAN DETECTION SYSTEM ON/OFF

Perform the following steps to enable or disable the AEB with Pedestrian Detection system.

1. Press the ◀ ▶ button until "Settings" displays in the vehicle information display and then press the OK button. Use the scroll dial to select "Driver Assistance." Then press the OK button.
2. Select "Emergency Brake" and press the OK button to turn the system on or off.

When the AEB with Pedestrian Detection system is turned off, the AEB with Pedestrian Detection system warning light illuminates.

NOTE:

- **The AEB with Pedestrian Detection system will be automatically turned on when the engine is restarted.**
- **The I-FCW system is integrated into the AEB with Pedestrian Detection system. There is not a separate selection in the vehicle information display for the I-FCW system. When the AEB with Pedestrian Detection system is turned off, the I-FCW system is also turned off.**
- **The AEB with Pedestrian Detection system cannot be turned on or off while driving.**

AEB WITH PEDESTRIAN DETECTION SYSTEM LIMITATIONS

WARNING

Listed below are the system limitations for the AEB with Pedestrian Detection system. Failure to operate the vehicle in accordance with these system limitations could result in serious injury or death.

- **The AEB with Pedestrian Detection system cannot detect all vehicles or pedestrians under all conditions.**
- **The AEB with Pedestrian Detection system does not detect the following:**
  - **Pedestrians that are small (for example, children), in a sitting position, operating toys/skateboards, on scooters or in wheelchairs, or not in an upright standing or walking position.**
  - **Animals of any size.**
  - **Obstacles (for example, cargo or debris) on the roadway or roadside.**
  - **Oncoming or crossing vehicles.**
  - **Vehicles where the tires are difficult to see or the shape of the rear of the vehicle is unclear or obstructed.**
  - **Parked vehicles.**
- **Junction assist does not detect the following:**
  - **Oncoming vehicle in front of your vehicle.**

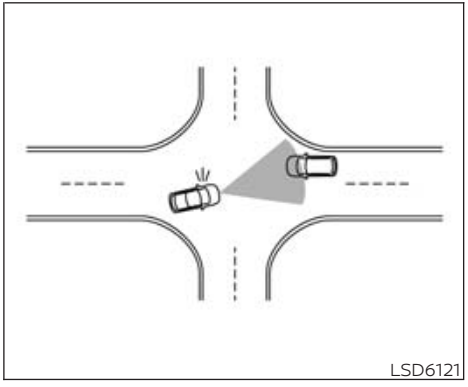

WARNING

- **The AEB with Pedestrian Detection system has some performance limitations.**
  - **If a stationary vehicle is in the vehicle's path, the system will not function when the vehicle approaches the stationary vehicle at speeds over approximately 50 mph (80 km/h).**

- Pedestrian detection will not function when the vehicle is driven at speeds over approximately 50 mph (80 km/h) or below approximately 6 mph (10km/h).

- The AEB with Pedestrian Detection system may not function properly or detect a vehicle or pedestrians ahead in the following conditions:
  - In poor visibility conditions (such as rain, snow, fog, dust storms, sand storms, smoke, and road spray from other vehicles).
  - If dirt, ice, snow, fog or other material is covering the radar sensor area or camera area of windshield.
  - If strong light (for example, sunlight or high beams) enters the front camera or a sudden change in brightness occurs (for example, entering a tunnel or driving in lightning).
  - In dark or dimly lit conditions, such as at night or in tunnels, including cases where your vehicle's headlights are off or dim, or the tail lights of the vehicle ahead are off.
  - When the direction of the camera is misaligned.
  - When driving on a steep downhill slope, on roads with sharp curves, and/or bumpy or dirt roads.
  - If there is interference by other radar sources.
  - When your vehicle's position or movement is changed quickly or significantly (for example, lane change, turning vehicle, abrupt steering, sudden acceleration or deceleration).
  - When your vehicle or the vehicle or pedestrian ahead moves quickly or significantly such that the system cannot detect and react in time (for example, pedestrian moving quickly toward the vehicle at close range, vehicle cutting in, changing lanes, making a turn, steering abruptly, sudden acceleration or deceleration).
  - When the vehicle or pedestrian is offset from the vehicle's forward path.
  - If the speed difference between the two vehicles is small.
  - The pedestrian's profile is partially obscured or unidentifiable; for example, due to transporting luggage, pushing a stroller, wearing bulky or very loose-fitting clothing or accessories, or being in a unique posture (such as raising hands).
  - There is poor contrast of a person to the background, such as having clothing color or pattern which is similar to the background.
  - For approximately 15 seconds after starting the engine.
  - If the vehicle ahead has a unique or unusual shape, extremely low or high clearance heights, or unusual cargo loading or is narrow (for example, a motorcycle).
  - When the vehicle or pedestrian is located near a traffic sign, a reflective area (for example, water on road), or is in a shadow.
  - When multiple pedestrians are grouped together.
  - When the view of the pedestrian is obscured by a vehicle or other object.

- While towing a trailer or other vehicle.

- Junction assist may not operate properly or detect an on- coming vehicle or pedestrian in the following conditions:
  - When driving in a traffic lane separated by more than 2 lanes from oncoming vehicles while making a right or left turn.
  - When not heading directly towards an oncoming vehicle during a right or left turn.
  - When crossing an oncoming vehicle lane and an oncoming vehicle approaches.
  - When turning sharply or on a very wide curve.
  - When the center line is not recognized by the system.
  - When there are a number of oncoming vehicles following each other in a row.
  - When the lane is wider or narrower than normal.
  - When the center line is located close to a road marker.

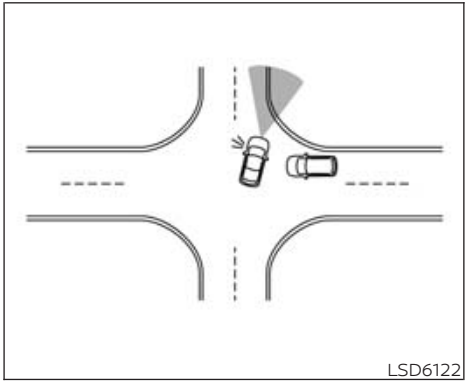
LSD6122

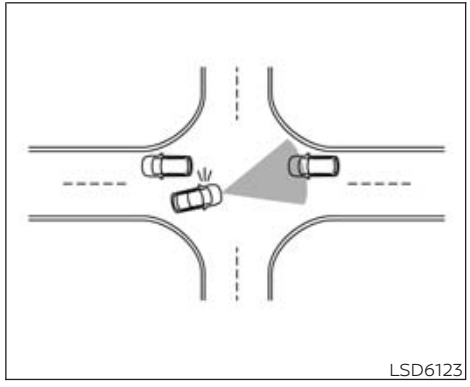
LSD6123

WARNING

- The system performance may be degraded in the following conditions:
  - The vehicle is driven on a slippery road.
  - The vehicle is driven on a slope.
  - Excessively heavy baggage is loaded in the rear seat or the cargo area of your vehicle.

- **The system is designed to automatically check the sensor's (radar and camera) functionality, within certain limitations. The system may not detect some forms of obstruction of the sensor area such as ice, snow or stickers, for example. In these cases, the system may not be able to warn the driver properly. Be sure that you check, clean and clear sensor areas regularly.**
- **In some road and traffic conditions, the AEB with Pedestrian Detection system may unexpectedly apply partial braking. When acceleration is necessary, depress the accelerator pedal to override the system.**
- **The AEB with Pedestrian Detection system may operate when a pattern, object, shadow or lights are detected that are similar to the outline of vehicles or pedestrians, or if they are the same size and position as a vehicle or motorcycle's tail lights.**
- **The system may keep operating when the vehicle ahead is turning right or left.**
- **The system may operate when your vehicle is approaching and passing a vehicle ahead.**
- **Depending on the road shape (curved road, entrance and exit of the curve, winding road, lane regulation, under construction, etc.), the system may operate temporarily for the oncoming vehicle in front of your vehicle.**

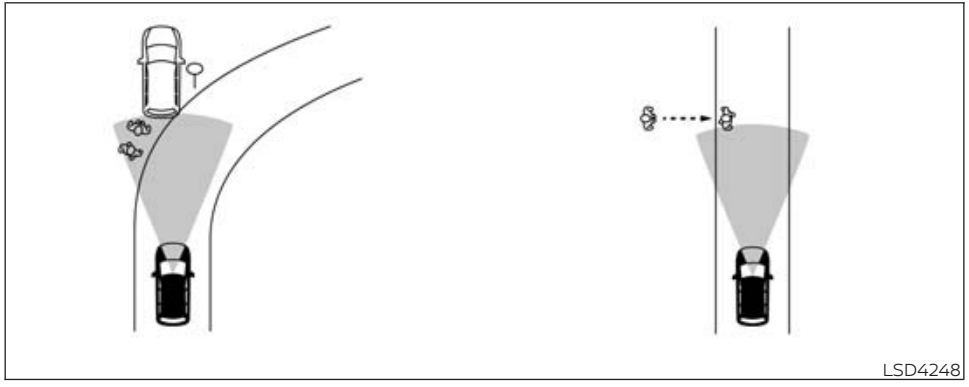

⚠ WARNING

Listed below are the system limitations for the AEB with Pedestrian Detection system. Failure to operate the vehicle in accordance with these system limitations could result in serious injury or death.

- **The AEB with Pedestrian Detection system may react to:**
  - **objects on the roadside (traffic sign, guardrail, pedestrian, motorcycle, vehicle, etc.)**
  - **pedestrians when driving on the narrow alleys, etc.**
  - **pedestrians who temporarily protrude into or approaching the driving lane to avoid the obstacles on the road shoulder**
  - **objects above road (low bridge, traffic sign, etc.)**
  - **objects on the road surface (railroad track, grate, steel plate, etc.)**
  - **objects in the parking garage (beam, pillar, etc.)**
  - **pedestrians or motorcycles approaching the travelling lane**
  - **vehicles, pedestrians, motorcycles or objects in adjacent lanes or close to the vehicle**
  - **oncoming pedestrians**
  - **objects on the road (such as trees)**
- **Junction assist may react to the following while making a right or left turn:**
  - **When an oncoming vehicle or a crossing pedestrian has already exited the path of your vehicle.**
  - **If you are closely in front of an oncoming vehicle or a crossing pedestrian.**
  - **When an oncoming vehicle or a crossing pedestrian stops before entering the path of your vehicle.**
  - **When an oncoming vehicle turns right or left in front of your vehicle.**
- **Junction assist may also react to the following:**
  - **When oncoming vehicle movement cannot be predicted due to sudden left or right turns or deceleration of the oncoming vehicle.**
- **Braking distances increase on slippery surfaces.**
- **Excessive noise will interfere with the warning chime sound, and the chime may not be heard.**

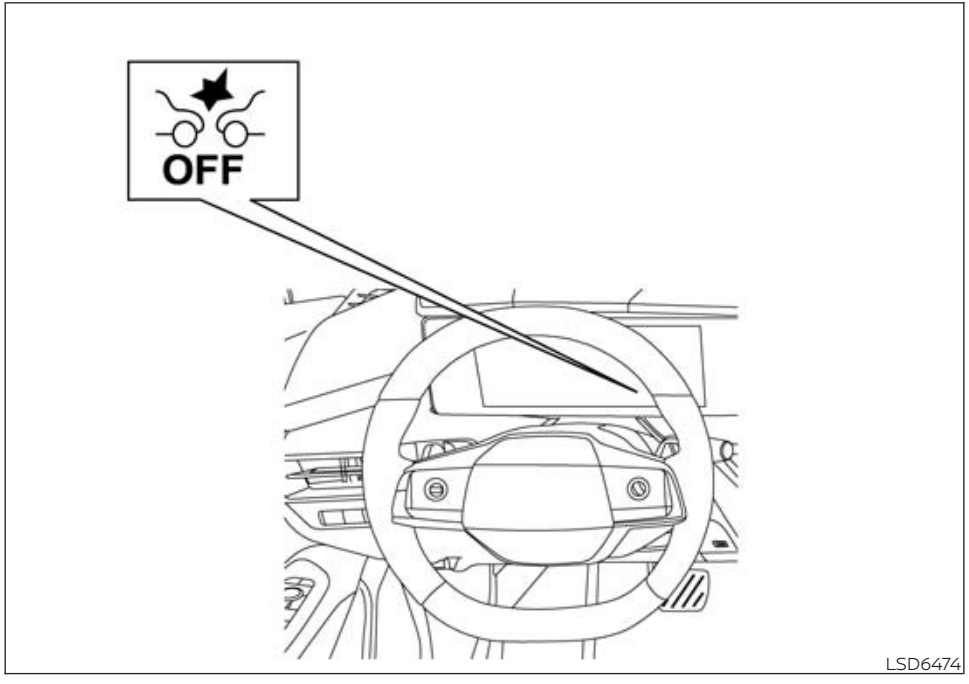

SYSTEM TEMPORARILY UNAVAILABLE

Condition A:

In the following conditions, the AEB with Pedestrian Detection system warning light will illuminate and the "Driving Aids Temporarily disabled Clean sensor area See Owner's Manual" warning message will appear in the vehicle information display. The system will be turned off automatically:

- The camera area of the windshield is covered with moisture, snow, ice, dirt or some other object.
- The camera area of the windshield is continuously covered with dirt, etc.

Action to take

Check that the windshield is clean and free from ice/mist in front of the camera. If necessary operate the Max defrosting function or heated windshield (if so equipped) to clear. This may take several minutes.

Condition B:

When there is inclement weather (rain, fog, snow, etc.) blocking the front radar sensor, the AEB with Pedestrian Detection system will automatically be canceled, the AEB with Pedestrian Detection system warning light illuminates and the "Driving Aids Temporarily disabled Clean sensor area See Owner's Manual" warning message will appear in the vehicle information display.

Action to take:

When the conditions listed above are no longer present, the warning message will no longer be available in the vehicle information display. If the "Driving Aids Temporarily disabled Clean sensor area See Owner's Manual" warning message continues to be displayed, have the system checked. It is recommended that you visit a NISSAN dealer for this service.

Condition C:

When the radar sensor of the front bumper is covered with mud, dirt, snow ice, etc., or is obstructed, the AEB with Pedestrian Detection system will automatically be canceled. The AEB with Pedestrian Detection system warning light illuminates and the "Driving Aids Temporarily disabled Clean sensor area See Owner's Manual" warning message will appear in the vehicle information display.

Action to take:

If the warning message appears, stop the vehicle in a safe place, place the shift position in the P (Park) position, and turn the engine off. When the radar signal is temporarily interrupted, clean the sensor area of the front bumper and restart the engine. If the "Driving Aids Temporarily disabled Clean sensor area See Owner's Manual" warning message continues to be displayed, have the system checked. It is recommended that you visit a NISSAN dealer for this service.

Condition D:

When driving on roads with limited road structures or buildings (for example, long bridges, deserts, snowfields, driving next to long walls), the system may illuminate the AEB with Pedestrian Detection system warning light and display the "Driving Aids Temporarily disabled Clean sensor area See Owner's Manual" message.

Action to take:

When the above driving conditions no longer exist, turn the system back on.

Condition E:

In the following conditions, the AEB with Pedestrian Detection system warning light will illuminate and the "Driving Aids Temporarily limited Poor Visibility" warning message will appear in the vehicle information display.

- Strong light is shining onto the front of the vehicle.
- The camera area of the windshield is fogged up or covered with dirt, water drops, ice, snow, etc. temporarily.

Action to take:

When the above conditions no longer exist, the AEB with Pedestrian Detection system will resume automatically.

Condition F:

In the following condition, the AEB with Pedestrian Detection system warning light will illuminate and the "Driving Aids temporarily limited Front Camera Too Hot" warning message will appear in the vehicle information display.

- The cabin temperature is over approximately 104° F (40°C) in direct sunlight.

Action to take:

When the interior temperature is reduced, the AEB with Pedestrian Detection system will resume automatically.

Condition G:

In the following conditions, the AEB with Pedestrian Detection system warning light will illuminate and the "Driving Aids temporarily limited" warning message will appear in the vehicle information display.

- When the system check for the warning function did not end normally.
- When the vehicle is towed.

Action to take:

When the above conditions no longer exist, the AEB with Pedestrian Detection system will resume automatically.

Condition H:

In the following condition, the AEB with Pedestrian Detection system warning light will illuminate and the "Driving Aids Temporarily limited Radar interference" warning message will appear in the vehicle information display.

- When the radar sensor picks up interference from another radar source.

Action to take:

When the above condition no longer exists, the AEB with Pedestrian Detection system will resume automatically.

Condition I:

When the Vehicle Dynamic Control (VDC) system is turned OFF, the AEB with Pedestrian Detection system will not operate and the "Limited driver's aid VDC setting OFF" warning message will appear in the vehicle information display. In this case only the visible and audible warning operates. The AEB with Pedestrian Detection system OFF warning light (orange) will illuminate.

Action to take:

When the VDC system is ON, the AEB with Pedestrian Detection system will resume automatically.

NOTE:

If the AEB with Pedestrian Detection system stops working, the I-FCW system will also stop working.

SYSTEM MALFUNCTION

If the AEB with Pedestrian Detection system malfunctions, it will be turned off automatically, a chime will sound, and the "Malfunction See Owner's Manual" warning message and the AEB with Pedestrian Detection system warning light (orange) will appear in the vehicle information display.

Action to take

If the warning light (orange) comes on, stop the vehicle in a safe location, turn the engine off and restart the engine. If the warning light continues to illuminate, have the AEB with Pedestrian Detection system checked. It is recommended that you visit a NISSAN dealer for this service.

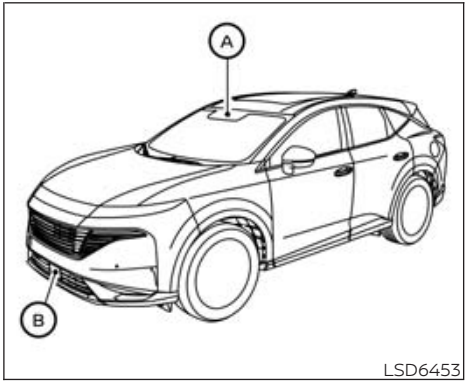

SYSTEM MAINTENANCE

Basic Information

The radar sensor is located on the front of the vehicle Ⓑ. The camera is located on the upper side of the windshield Ⓐ.

To keep the AEB with Pedestrian Detection system operating properly, be sure to observe the following:

- Always keep the sensor areas of the front bumper/emblem and windshield clean.
- Do not strike or damage the areas around the sensors (e.g., bumper, windshield).

- Do not cover or attach stickers, or install any accessory near the sensors. This could block sensor signals and/or cause failure or malfunction.
- Do not attach metallic objects near the radar sensor (brush guard, etc.). This could cause failure or malfunction.
- Do not place reflective materials, such as white paper or a mirror, on the instrument panel. The reflection of sunlight may adversely affect the camera unit's detection capability.
- Do not alter, remove or paint the front bumper. Before customizing or restoring the front bumper, it is recommended that you visit a NISSAN dealer.

Radio frequency statement

For USA

This device complies with Part 15 of the FCC Rules. Operation is subject to the following two conditions:

1. This device may not cause harmful interference, and
2. This device must accept any interference received, including interference that may cause undesired operation.

FCC Warning

Changes or modifications not expressly approved by the party responsible for compliance could void the user's authority to operate the equipment.

For Canada

This device complies with Part 15 of the FCC Rules and with Industry Canada licence-exempt RSS standard(s). Operation is subject to the following two conditions:

1. This device may not cause interference, and
2. This device must accept any interference received, including interference that may cause undesired operation of the device.

Radio frequency radiation exposure information:

This equipment complies with FCC and IC radiation exposure limits set forth for an uncontrolled environment.

This equipment should be installed and operated with minimum distance of 30 cm between the radiator and your body.

This transmitter must not be co-located or operating in conjunction with any other antenna or transmitter.

FCC Notice

Changes or modifications not expressly approved by the party responsible for compliance could void the user's authority to operate the equipment.

INTELLIGENT FORWARD COLLISION WARNING (I-FCW)

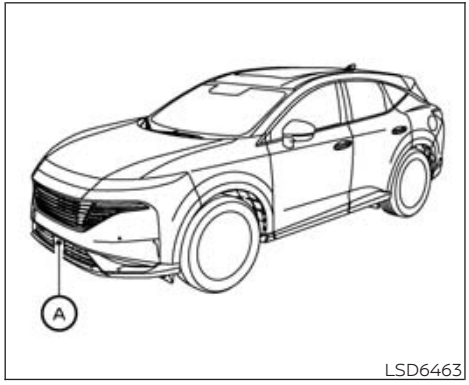

The I-FCW system can help alert the driver when there is a sudden braking of a second vehicle traveling in front of the vehicle ahead in the same lane.

The I-FCW system uses a radar sensor Ⓐ located on the front of the vehicle to measure the distance to the vehicle ahead in the same lane.

BASIC INFORMATION

⚠ WARNING

Failure to follow the warnings and instructions for proper use of the I-FCW system could result in serious injury or death.

- **The I-FCW system can help warn the driver before a collision occurs but will not avoid a collision. It is the driver's responsibility to stay alert, drive safely and be in control of the vehicle at all times.**

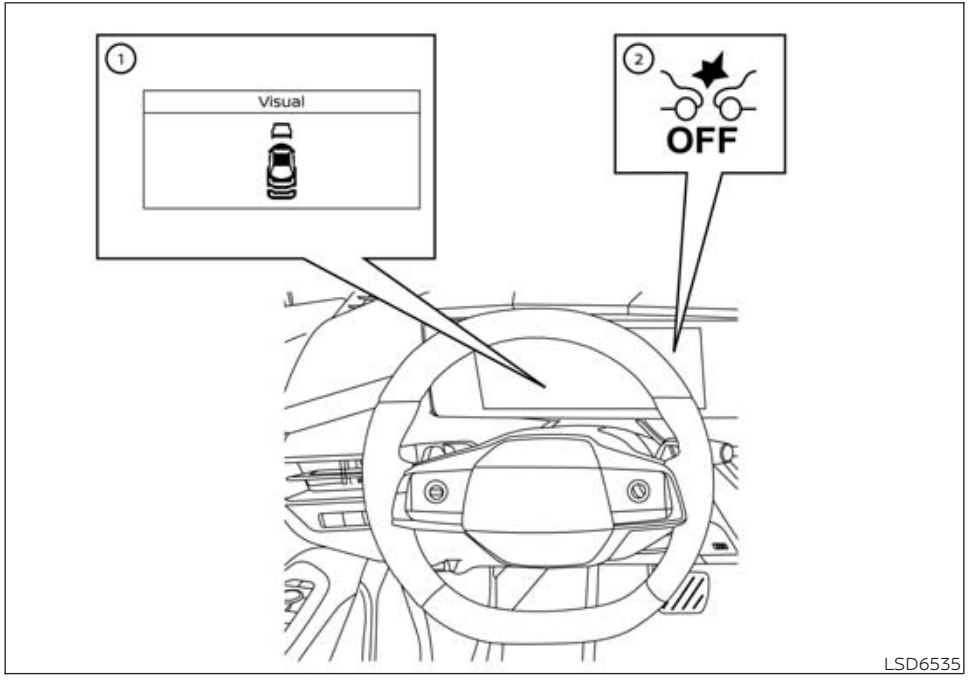

I-FCW SYSTEM OPERATION

① Vehicle ahead detection indicator

② I-FCW system warning light

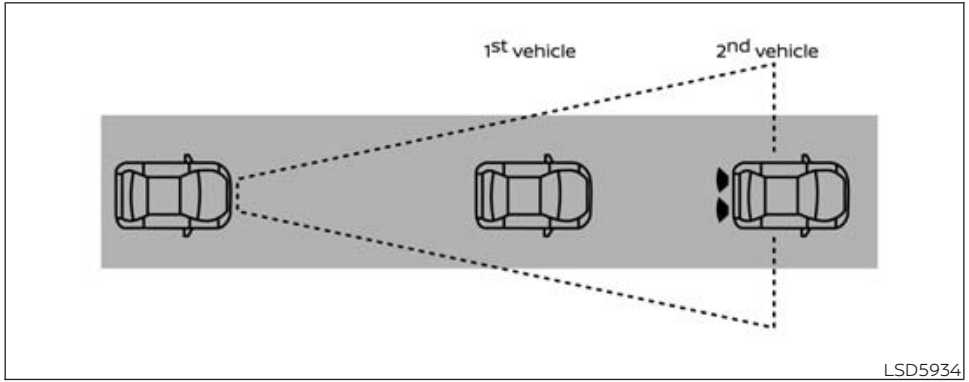

The I-FCW system operates at speeds above approximately 3 mph (5 km/h).

If there is a potential risk of a forward collision, the I-FCW system will warn the driver by blinking the vehicle ahead detection indicator, and sounding an audible alert.

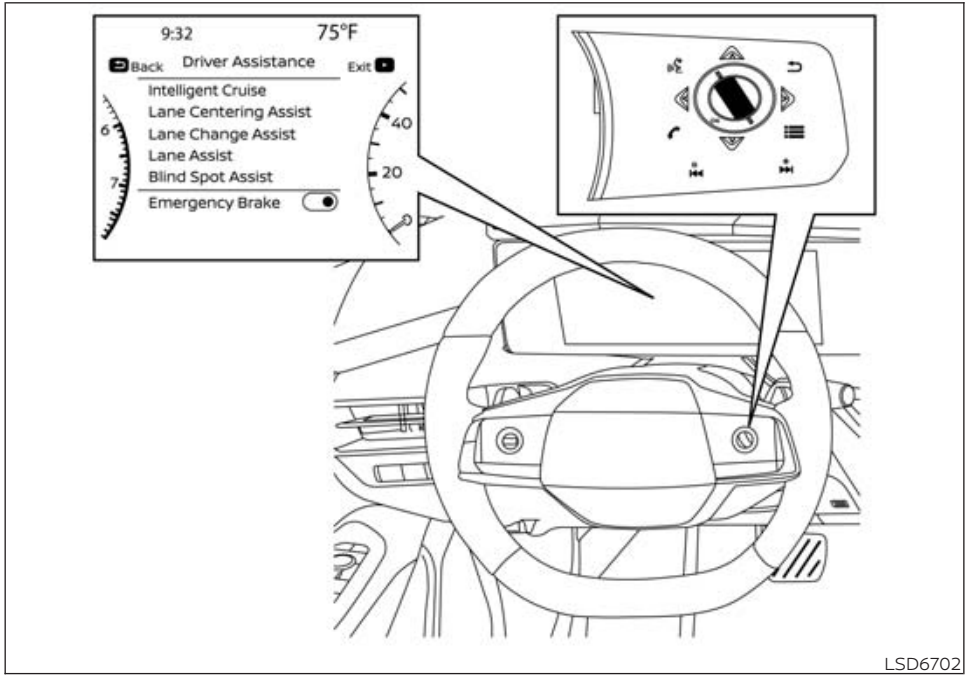

TURNING THE I-FCW SYSTEM ON/OFF

Perform the following steps to turn the I-FCW system on or off.

1. Press the ◀ ▶ button until "Settings" displays in the vehicle information display and then press the OK button. Use the scroll dial to select "Driver Assistance." Then press the OK button.
2. Select "Emergency Brake" and press the OK button to turn the system on or off.

When the I-FCW system is turned off, the I-FCW system warning light illuminates.

NOTE:

- **The I-FCW system will be automatically turned on when the engine is restarted.**
- **The I-FCW system is integrated into the AEB with Pedestrian Detection system. There is not a separate selection in the vehicle information display for the I-FCW system. When the AEB with Pedestrian Detection is turned off, the I-FCW system is also turned off.**
- **The I-FCW system cannot be turned on or off while driving.**

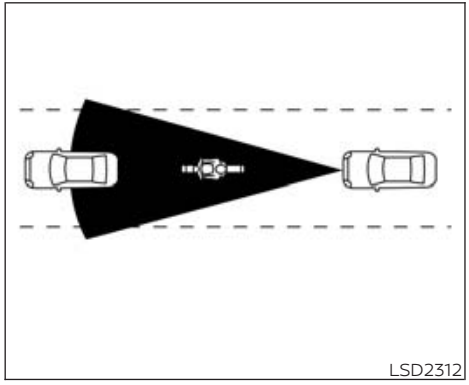

Illustration A

I-FCW SYSTEM LIMITATIONS

⚠ WARNING

Listed below are the system limitations for the I-FCW system. Failure to operate the vehicle in accordance with these system limitations could result in serious injury or death.

- **The I-FCW system cannot detect all vehicles under all conditions.**
- **The radar sensor does not detect the following objects:**
  - **Pedestrians, animals or obstacles in the roadway**
  - **Oncoming vehicles**
  - **Crossing vehicles**
- **(Illustration A) The I-FCW system does not function when a vehicle ahead is a narrow vehicle, such as a motorcycle.**
- **The radar sensor may not detect a vehicle ahead in the following conditions:**
  - **Snow or heavy rain**
  - **Dirt, ice, snow or other material covering the radar sensor.**
  - **Interference by other radar sources.**
  - **Snow or road spray from traveling vehicles.**
  - **Driving in a tunnel**
- **(Illustration B) When the vehicle ahead is being towed.**
- **(Illustration C) When the distance to the vehicle ahead is too close, the beam of the radar sensor is obstructed.**
- **(Illustration D) When driving on a steep downhill slope or roads with sharp curves.**
- **The system is designed to automatically check the sensor's functionality, within certain limitations. The system may not detect some forms of obstruction of the sensor area such as ice, snow, stickers, etc. In these cases, the system may not be able to warn the driver properly. Be sure that you check, clean and clear the sensor area regularly.**
- **Excessive noise will interfere with the warning chime sound, and the chime may not be heard.**

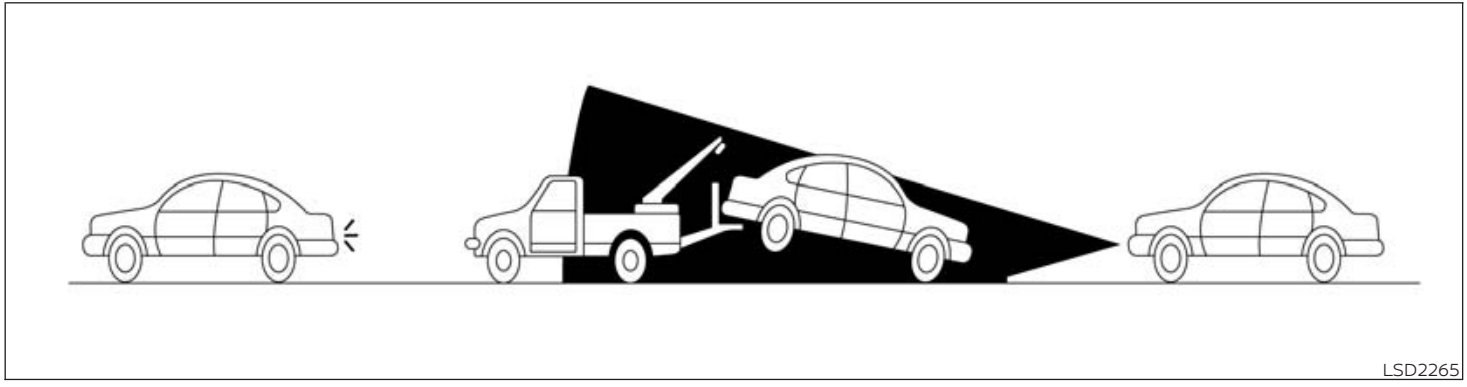

Illustration B

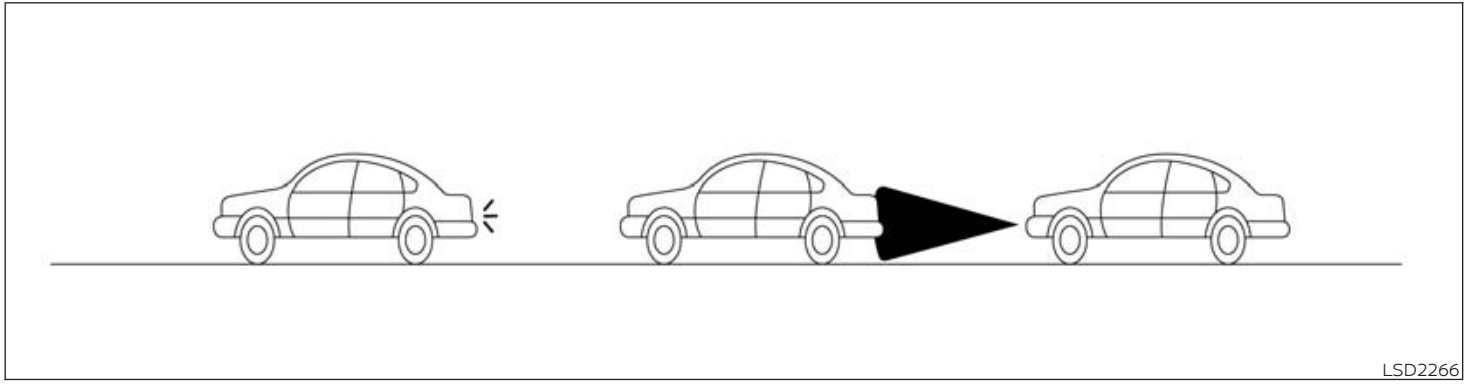

Illustration C

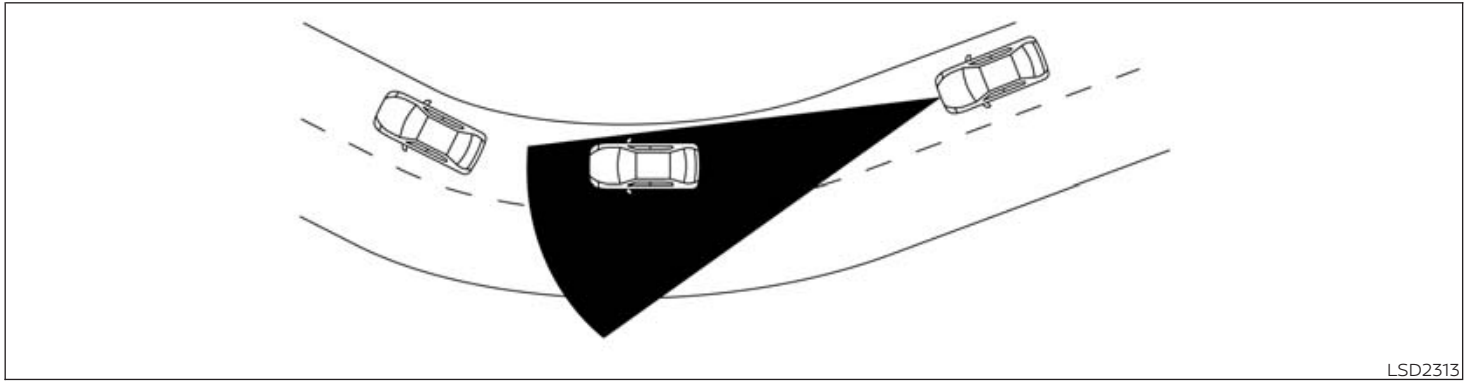

Illustration D

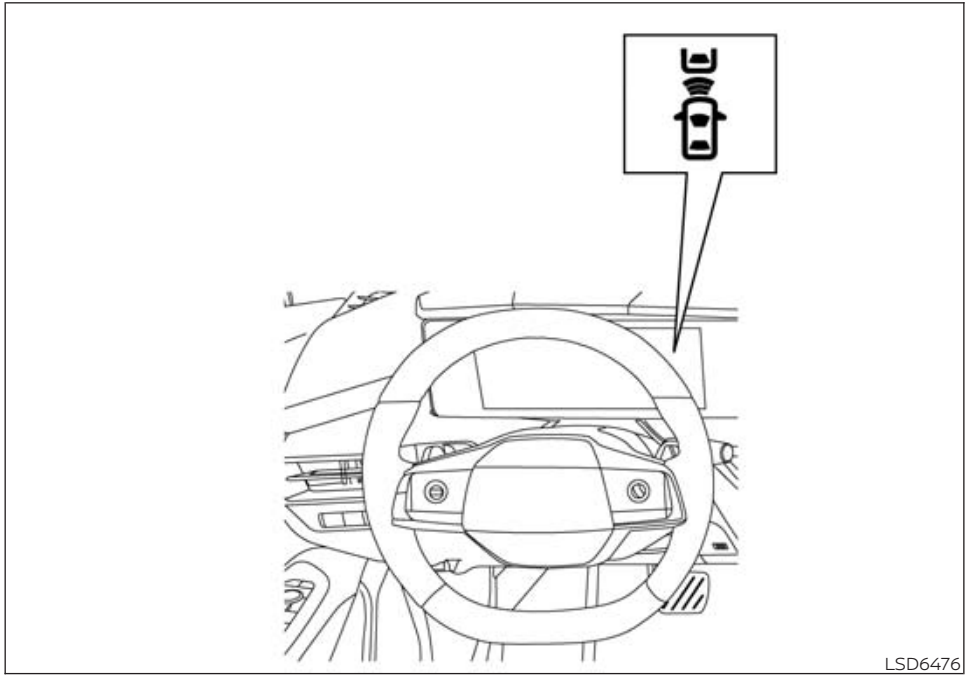

SYSTEM TEMPORARILY UNAVAILABLE

Condition A

When the radar sensor picks up interference from another radar source, making it impossible to detect a vehicle ahead, the I-FCW system is automatically turned off and the "Driving Aids Temporarily limited Radar interference" warning message will appear in the vehicle information display.

The AEB with Pedestrian Detection system warning light (orange) will illuminate.

Action to take:

When the above conditions no longer exist, the I-FCW system will resume automatically.

Condition B

When there is inclement weather (rain, fog, snow, etc.) blocking the front radar sensor, the I-FCW system will automatically be canceled. The AEB with Pedestrian Detection system warning light illuminates and the "Driving Aids Temporarily disabled Clean sensor area See Owner's Manual" warning message will appear in the vehicle information display.

Action to take:

When the conditions listed above are no longer present, the warning message will no longer be available in the vehicle information display. If the "Driving Aids Temporarily disabled Clean sensor area See Owner's Manual" warning message continues to be displayed, have the system checked. It is recommended that you visit a NISSAN dealer for this service.

Condition C

When the radar sensor of the front bumper is covered with mud, dirt, snow, ice, etc., or is obstructed, the I-FCW system will automatically be canceled, the AEB with Pedestrian Detection system warning light illuminates and the "Driving Aids Temporarily disabled Clean sensor area See Owner's Manual" warning message will appear in the vehicle information display.

Action to take:

If the warning message appears, stop the vehicle in a safe place, place the shift position in the P (Park) position, and turn the engine off. When the radar signal is temporarily interrupted, clean the sensor area of the front bumper and restart the engine. If the "Driving Aids Temporarily disabled Clean sensor area See Owner's Manual" warning message continues to be displayed, have the system checked. It is recommended that you visit a NISSAN dealer for this service.

Condition D

When driving on roads with limited road structures or buildings (for example, long bridges, deserts, snowfields, driving next to long walls), the system may illuminate the AEB with Pedestrian Detection system warning light and display the "Driving Aids Temporarily disabled Clean sensor area See Owner's Manual" message.

Action to take:

When the above driving conditions no longer exist, turn the system back on.

NOTE:

If the AEB with Pedestrian Detection system stops working, the I-FCW system will also stop working.

SYSTEM MALFUNCTION

If the I-FCW system malfunctions, it will be turned off automatically, a chime will sound, the "Malfunction See Owner's Manual" warning message and the AEB with Pedestrian Detection warning light (orange) will appear in the vehicle information display.

Action to take

If the warning light (orange) comes on, stop the vehicle in a safe location, turn the engine off and restart the engine. If the warning light continues to illuminate, have the I-FCW system checked. It is recommended that you visit a NISSAN dealer for this service.

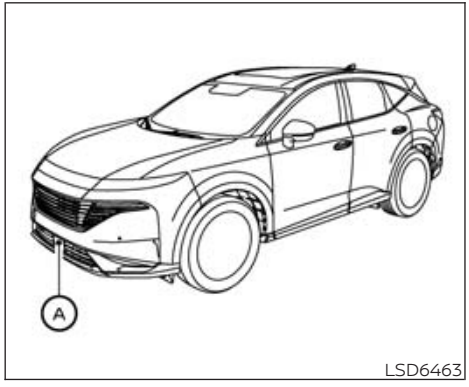

SYSTEM MAINTENANCE

Basic Information

The sensor Ⓐ is located on the front of the vehicle.

To keep the system operating properly, be sure to observe the following:

- Always keep the sensor area of the front bumper/emblem clean.
- Do not strike or damage the areas around the sensor.
- Do not cover or attach stickers or similar objects on the front bumper near the sensor area. This could cause failure or malfunction.
- Do not attach metallic objects near the sensor area (brush guard, etc.). This could cause failure or malfunction.
- Do not alter, remove or paint the front bumper. Before customizing or restoring the front bumper, it is recommended that you visit a NISSAN dealer.

Radio frequency statement

For USA

This device complies with Part 15 of the FCC rules.

Operation is subject to the following two conditions:

1. This device may not cause harmful interference, and
2. This device must accept any interference received, including interference that may cause undesired operation.

FCC Warning

Changes or modifications not expressly approved by the party responsible for compliance could void the user's authority to operate the equipment.

This equipment has been tested and found to comply with the limits for a Class A digital device, pursuant to Part 15 of the FCC Rules. These limits are designed to provide reasonable protection against harmful interference when the equipment is operated in a commercial environment. This equipment generates, uses, and can radiate radio frequency energy and, if not installed and used in accordance with the instruction manual, may cause harmful interference to radio communications. Operation of this equipment in a residential area is likely to cause harmful interference in which case the user will be required to correct the interference at his own expense.

Radio frequency radiation exposure information:

This equipment complies with FCC radiation exposure limits set forth for an uncontrolled environment.

This equipment should be installed and operated with minimum distance of 20 cm between the radiator and your body.

The transmitter must not be co-located or operating in conjunction with any other antenna or transmitter.

For Canada

This device complies with Industry Canada licence-exempt RSS standard(s). Operation is subject to the following two conditions:

1. This device may not cause interference,
2. This device must accept any interference received, including interference that may cause undesired operation of the device.

Radio frequency radiation exposure information:

This equipment complies with FCC and IC radiation exposure limits set forth for an uncontrolled environment.

This equipment should be installed and operated with minimum distance of 30 cm between the radiator and your body.

This transmitter must not be co-located or operating in conjunction with any other antenna or transmitter.

FCC Notice

Changes or modifications not expressly approved by the party responsible for compliance could void the user's authority to operate the equipment.

INTELLIGENT DRIVER ALERTNESS (I-DA)

BASIC INFORMATION

⚠ WARNING

Failure to follow the warnings and instructions for proper use of the I-DA system could result in serious injury or death.

- **The I-DA system is only a warning to inform the driver of a potential lack of driver attention or drowsiness. It will not steer the vehicle or prevent loss of control.**
- **The I-DA system does not detect and provide an alert of the driver's lack of attention or fatigue in every situation.**
- **It is the driver's responsibility to:**
  - **Stay alert.**
  - **Drive safely.**
  - **Keep the vehicle in the traveling lane.**
  - **Be in control of the vehicle at all times.**
  - **Avoid driving when tired.**
  - **Avoid distractions (texting, etc.).**

The I-DA system helps alert the driver if the system detects a lack of attention or driving fatigue.

The system monitors driving style and steering behavior over a period of time, and it detects changes from the normal pattern. If the system detects that driver attention is decreasing over a period of time, the system uses audible and visual warnings to suggest that the driver take a break.

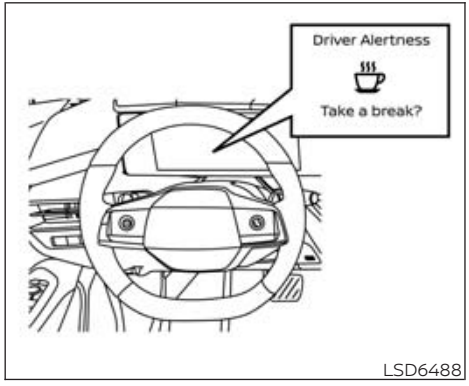

INTELLIGENT DRIVER ALERTNESS SYSTEM OPERATION

If the system detects driver fatigue or that driver attention is decreasing, the message "Take a break?" appears in the vehicle information display and a chime sounds when the vehicle is driven at speeds above 37 mph (60 km/h).

The system continuously monitors driver attention and can provide multiple warnings per trip.

The system resets and starts reassessing driving style and steering behavior when the ignition switch is cycled from the ON to the OFF position and back to the ON position.

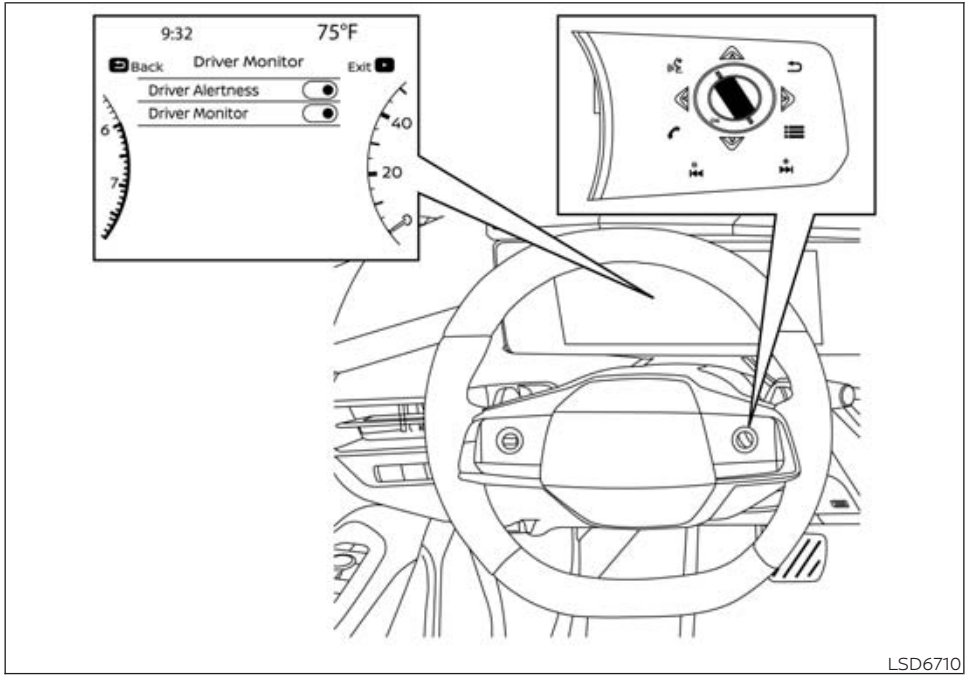

HOW TO ENABLE/DISABLE THE INTELLIGENT DRIVER ALERTNESS (I-DA) SYSTEM

Perform the following steps to enable or disable the I-DA system.

1. Press the ◀ ▶ button until "Settings" displays in the vehicle information display and press the OK button. Use the scroll dial to select "Driver Assistance." Then press the OK button.
2. Select "Driver Monitor" and press the OK button.
3. Select "Driver Alertness" and press the OK button to turn the system on or off.

NOTE:

The I—DA system will be automatically turned on when the engine is restarted.

INTELLIGENT DRIVER ALERTNESS (I-DA) SYSTEM LIMITATIONS

Basic Information

⚠ WARNING

Listed below are the system limitations for the I-DA system. Failure to operate the vehicle in accordance with these system limitations could result in serious injury or death.

- **The I-DA system may not operate properly and may not provide an alert in the following conditions:**
  - **Poor road conditions such as an uneven road surface or pot holes.**
  - **Strong side wind.**
  - **If you have adopted a sporty driving style with higher cornering speeds or higher rates of acceleration.**
  - **Frequent lane changes or changes to vehicle speed.**
- **The I-DA system will not provide an alert in the following conditions:**
  - **Vehicle speeds lower than 37 mph (60 km/h).**
  - **Short lapses of attention.**
  - **Instantaneous distractions such as dropping an object.**

LSD6532

System malfunction

If the Intelligent Driver Alertness system malfunctions, the system warning message will appear in the vehicle information display, a chime will sound and the function will be stopped automatically.

Action to take

Stop the vehicle in a safe location, place the vehicle in P (Park) position, turn the engine off and restart the engine. If the system warning message continues to appear, have the system checked. It is recommended that you visit a NISSAN dealer for this service.

BREAK-IN SCHEDULE

⚠ CAUTION

During the first 1,200 miles (2,000 km), follow these recommendations to obtain maximum engine performance and ensure the future reliability and economy of your new vehicle. Failure to follow these recommendations may result in shortened engine life and reduced engine performance.

- Avoid driving for long periods at constant speed, either fast or slow, and do not run the engine over 4,000 rpm.
- Do not accelerate at full throttle in any gear.
- Avoid quick starts.
- Avoid hard braking as much as possible.
- Do not tow a trailer for the first 500 miles (805 kilometers). Your engine, axle or other parts could be damaged.

FUEL EFFICIENT DRIVING TIPS

Follow these easy-to-use Fuel Efficient Driving Tips to help you achieve the most fuel economy from your vehicle.

1. **Use Smooth Accelerator and Brake Pedal Application**
   - Avoid rapid starts and stops.
   - Use smooth, gentle accelerator and brake application whenever possible.
   - Maintain constant speed while commuting and coast whenever possible.
2. **Maintain Constant Speed**
   - Look ahead to try and anticipate and minimize stops.
   - Synchronizing your speed with traffic lights allows you to reduce your number of stops.
   - Maintaining a steady speed can minimize red light stops and improve fuel efficiency.
3. **Use Air Conditioning (A/C) at Higher Vehicle Speeds**
   - Below 40 mph (64 km/h), it is more efficient to open windows to cool the vehicle due to reduced engine load.
   - Above 40 mph (64 km/h), it is more efficient to use A/C to cool the vehicle due to increased aerodynamic drag.
   - Recirculating the cool air in the cabin when the A/C is on reduces cooling load.
4. **Drive at Economical Speeds and Distances**
   - Observing the speed limit and not exceeding 60 mph (97 km/h) (where legally allowed) can improve fuel efficiency due to reduced aerodynamic drag.
   - Maintaining a safe following distance behind other vehicles reduces unnecessary braking.
   - Safely monitoring traffic to anticipate changes in speed permits reduced braking and smooth acceleration changes.
   - Select a gear range suitable to road conditions.
5. **Use Cruise Control**
   - Using cruise control during highway driving helps maintain a steady speed.
   - Cruise control is particularly effective in providing fuel savings when driving on flat terrains.
6. **Plan for the Shortest Route**
   - Utilize a map or navigation system to determine the best route to save time.

7. **Avoid Idling**
   - Shutting off your engine when safe for stops exceeding 30–60 seconds saves fuel and reduces emissions.
8. **Buy an Automated Pass for Toll Roads**
   - Automated passes permit drivers to use special lanes to maintain cruising speed through the toll and avoid stopping and starting.
9. **Winter Warm Up**
   - Limit idling time to minimize impact to fuel economy.
   - Vehicles typically need no more than 30 seconds of idling at start-up to effectively circulate the engine oil before driving.
   - Your vehicle will reach its ideal operating temperature more quickly while driving versus idling.
10. **Keeping your Vehicle Cool**
   - Park your vehicle in a covered parking area or in the shade whenever possible.
   - When entering a hot vehicle, opening the windows will help to reduce the inside temperature faster, resulting in reduced demand on your A/C system.

INCREASING FUEL ECONOMY

- Keep your engine tuned up.
- Follow the recommended scheduled maintenance.
- Keep the tires inflated to the correct pressure. Low tire pressure increases tire wear and lowers fuel economy.
- Keep all the wheels in correct alignment. Improper alignment increases tire wear and lowers fuel economy.
- Use the recommended viscosity engine oil. For additional information, see "Engine oil and oil filter recommendations" (P. 561).

ALL-WHEEL DRIVE (AWD) (if so equipped)

If any malfunction occurs in the AWD system while the engine is running, messages are displayed in the meter.

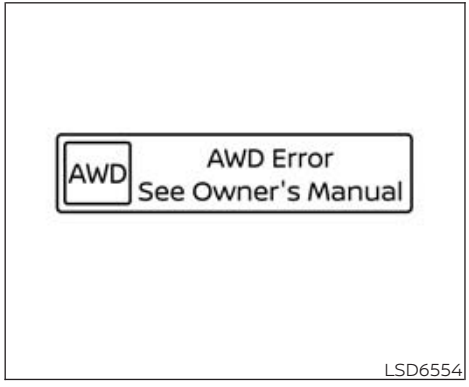

If the AWD error warning message is displayed, there may be a malfunction in the AWD system. Reduce vehicle speed and have your vehicle checked. It is recommended that you visit a NISSAN dealer as soon as possible.

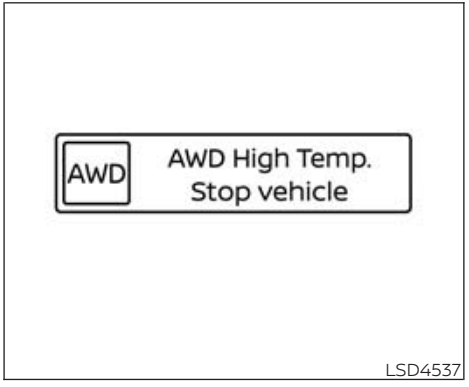

The AWD high temperature message may be displayed while trying to free a stuck vehicle due to increased oil temperature. The driving mode may change to 2-Wheel Drive (2WD). If this message is displayed, stop the vehicle with the engine idling, as soon as it is safe to do so. Then if the message turns off, you can continue driving.

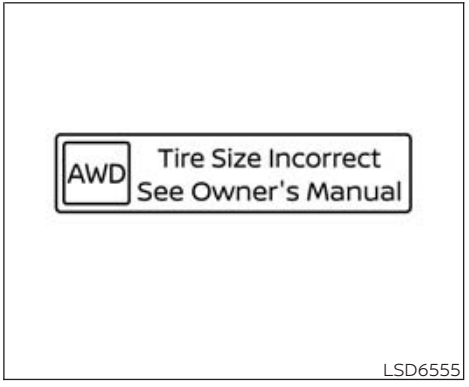

The tire size message may be displayed if there is a large difference between the diameters of front and rear wheels. Pull off the road in a safe area, with the engine idling. Check that all tire sizes are the same, that the tire pressure is correct and that the tires are not excessively worn.

If any warning messages continue to be displayed, have your vehicle checked. It is recommended that you visit a NISSAN dealer as soon as possible.

⚠ WARNING

- **Do not drive beyond the performance capability of the tires. Accelerating quickly, sharp steering maneuvers or sudden braking may cause loss of control, even with AWD engaged.**
- **For AWD equipped vehicles, do not attempt to raise two wheels off the ground and shift the transmission to any drive or reverse position with the engine running. Doing so may result in drivetrain damage or unexpected vehicle movement which could result in serious personal injury or vehicle damage.**
- **Do not attempt to test an AWD equipped vehicle on a 2-wheel dynamometer (such as the dynamometers used by some states for emissions testing) or similar equipment even if the other two wheels are raised off the ground. Make sure that you inform the test facility personnel that your vehicle is equipped with AWD before it is placed on a dynamometer. Using the wrong test equipment may result in drivetrain damage or unexpected vehicle movement which could result in serious personal injury or vehicle damage.**

⚠ CAUTION

- **Do not operate the engine on a free roller when any of the wheels are raised.**
- **If you use the free roller, rotate four wheels with the same speed without raising any wheels.**
- **If an AWD warning message is displayed while driving there may be a malfunction in the AWD system. Reduce the vehicle speed immediately and have your vehicle checked. It is recommended that you visit a NISSAN dealer as soon as possible.**
- **The powertrain may be damaged if you continue driving when the AWD temperature or tire size incorrect messages are displayed**
- **If the AWD high temperature message is displayed while you are driving, pull off the road in a safe area, and idle the engine. The driving mode will change to 2WD to prevent the AWD system from malfunctioning. If the warning message turns off, you can drive again.**
- **If the tire size incorrect message is displayed while you are driving, pull off the road in a safe area with the engine idling. Check that all tire sizes are the same, that the tire pressure is correct and that the tires are not excessively worn.**
- **If a warning message continues to be displayed after the above operations, have your vehicle checked as soon as possible. It is recommended that you visit a NISSAN dealer for this service.**

When the vehicle is in the P (Park) position, the operation noise may be heard from the lower part of the vehicle. This is not a malfunction.

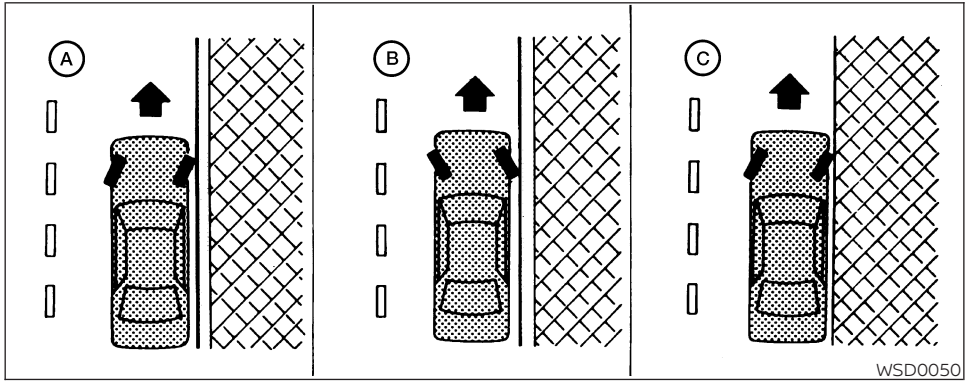

⚠ WARNING

- **Do not stop or park the vehicle over flammable materials such as dry grass, waste paper or rags. They may ignite and cause a fire.**
- **Safe parking procedures require that both the parking brake be set and the transmission placed into P (Park). Failure to do so could cause the vehicle to move unexpectedly or roll away and result in an accident.**
- **Make sure the transmission cannot be shifted without depressing the foot brake pedal.**
- **Never leave the engine running while the vehicle is unattended.**
- **Do not leave children unattended inside the vehicle. They could unknowingly activate switches or controls or make the vehicle move. Unattended children could become involved in serious accidents.**
- **To help avoid risk of injury or death through unintended operation of the vehicle and/or its systems, do not leave children, people who require the assistance of others or pets unattended in your vehicle. Additionally, the temperature inside a closed vehicle on a warm day can quickly become high enough to cause a significant risk of injury or death to people and pets.**

1. Firmly apply the parking brake.
2. Press the P (Park) button to shift to the P (Park) position.
3. To help prevent the vehicle from rolling into traffic when parked on an incline, it is a good practice to turn the wheels as illustrated.
   - **HEADED DOWNHILL WITH CURB Ⓐ:**
     Turn the wheels into the curb and move the vehicle forward until the curb side wheel gently touches the curb.
   - **HEADED UPHILL WITH CURB Ⓑ:**
     Turn the wheels away from the curb and move the vehicle back until the curb side wheel gently touches the curb.

- **HEADED UPHILL OR DOWNHILL, NO CURB ⓒ:**
  Turn the wheels toward the side of the road so the vehicle will move away from the center of the road if it moves.

4. Place the ignition switch in the LOCK position.

NOTE:

Use the Idling Stop System when the vehicle is stopped for a period of time, for example waiting at stop lights. Stop the engine with the ignition switch when parking, etc. for an extended period of time.

⚠WARNING

- **If the engine is not running or is turned off while driving, the power assist for the steering will not work. Steering will be harder to operate.**
- **When the electric power steering warning light illuminates with the engine running, the power assist for the steering will reduce or cease operation. You will still have control of the vehicle but the steering will be harder to operate.**

The electric power steering is designed to provide power assist while driving to operate the steering wheel with light force.

When SPORT mode is selected, the steering wheel effort is moderately increased for a sporty feel. For additional information, see "SPORT mode" (P. 298).

When the steering wheel is operated repeatedly or continuously while parking or driving at a very low speed, the power assist for the steering wheel will be reduced. This is to prevent overheating of the electric power steering and protect it from getting damaged. While the power assist is reduced, steering wheel operation will become heavy. When the temperature of the electric power steering goes down, the power assist level will return to normal. Avoid repeating such steering wheel operations that could cause the electric power steering to overheat.

You may hear a noise when the steering wheel is operated quickly. However, this is not a malfunction.

If the electric power steering warning light illuminates while the engine is running, it may indicate the electric power steering is not functioning properly and may need servicing. Have the electric power steering checked. It is recommended that you visit a NISSAN dealer for this service. For additional information, see "Electric power steering warning light (red)" (P. 88) or "Electric power steering warning light (yellow)" (P. 91), depending on the lit color.

When the electric power steering warning light illuminates with the engine running, the power assist for the steering will reduce or cease operation. You will still have control of the vehicle. However, greater steering effort is needed, especially in sharp turns and at low speeds.

BASIC INFORMATION

The brake system has two separate hydraulic circuits. If one circuit malfunctions, you will still have braking at two wheels.

BRAKE PRECAUTIONS

Vacuum assisted brakes

The brake booster aids braking by using engine vacuum. If the engine stops, you can stop the vehicle by depressing the brake pedal. However, greater foot pressure on the brake pedal will be required to stop the vehicle and stopping distance will be longer.

Using the brakes

Avoid resting your foot on the brake pedal while driving. This will overheat the brakes, wear out the brake pads faster, and reduce gas mileage.

To help reduce brake wear and to prevent the brakes from overheating, reduce speed and downshift to a lower gear before going down a slope or long grade. Overheated brakes may reduce braking performance and could result in loss of vehicle control.

⚠ WARNING

- **While driving on a slippery surface, be careful when braking, accelerating or downshifting. Abrupt braking or accelerating could cause the wheels to skid and result in an accident.**
- **If the engine is not running or is turned off while driving, the power assist for the brakes will not work. Braking will be harder.**

Wet brakes

When the vehicle is washed or driven through water, the brakes may get wet. As a result, your braking distance will be longer and the vehicle may pull to one side during braking.

To dry the brakes, drive the vehicle at a safe speed while lightly pressing the brake pedal to heat up the brakes. Do this until the brakes return to normal. Avoid driving the vehicle at high speeds until the brakes function correctly.

Parking brake break-in

Break in the parking brake shoes whenever the stopping effect of the parking brake is weakened or whenever the parking brake shoes are replaced, in order to assure the best braking performance.

This procedure is described in the vehicle service manual. It is recommended that you visit a NISSAN dealer for this service.

ANTI-LOCK BRAKING SYSTEM (ABS)

Basic Information

⚠WARNING

- **The ABS is a sophisticated device, but it cannot prevent accidents resulting from careless or dangerous driving techniques. It can help maintain vehicle control during braking on slippery surfaces. Remember that stopping distances on slippery surfaces will be longer than on normal surfaces even with ABS. Stopping distances may also be longer on rough, gravel or snow covered roads, or if you are using tire chains. Always maintain a safe distance from the vehicle in front of you. Ultimately, the driver is responsible for safety.**
- **Tire type and condition may also affect braking effectiveness.**
  - **When replacing tires, install the specified size of tires on all four wheels.**
  - **When installing a spare tire, make sure that it is the proper size and type as specified on the Tire and Loading Information label. For additional information, see "Tire and Loading Information label" (P. 566).**
  - **For additional information, see "Wheels and tires" (P. 511).**

The ABS controls the brakes so the wheels do not lock during hard braking or when braking on slippery surfaces. The system detects the rotation speed at each wheel and varies the brake fluid pressure to prevent each wheel from locking and sliding. By preventing each wheel from locking, the system helps the driver maintain steering control and helps to minimize swerving and spinning on slippery surfaces.

Using the system

Depress the brake pedal and hold it down. Depress the brake pedal with firm steady pressure, but do not pump the brakes. The Anti-lock Braking System will operate to prevent the wheels from locking up. Steer the vehicle to avoid obstacles.

⚠WARNING

Do not pump the brake pedal. Doing so may result in increased stopping distances.

Self-test feature

The Anti-lock Braking System (ABS) includes electronic sensors, electric pumps, hydraulic solenoids and a computer. The computer has a built-in diagnostic feature that tests the system each time you start the engine and move the vehicle at a low speed in forward or reverse. When the self-test occurs, you may hear a "clunk" noise and/or feel a pulsation in the brake pedal. This is normal and does not indicate a malfunction. If the computer senses a malfunction, it switches the ABS off and illuminates the ABS warning light on the instrument panel. The brake system then operates normally, but without anti-lock assistance.

If the ABS warning light illuminates during the self-test or while driving, have the vehicle checked. It is recommended that you visit a NISSAN dealer for this service.

Normal operation

The Anti-lock Braking System (ABS) operates at speeds above 3 - 6 mph (5 - 10 km/h). The speed varies according to road conditions.

When the ABS senses that one or more wheels are close to locking up, the actuator rapidly applies and releases hydraulic pressure. This action is similar to pumping the brakes very quickly. You may feel a pulsation in the brake pedal and hear a noise from under the hood or feel a vibration from the actuator when it is operating. This is normal and indicates that the ABS is operating properly. However, the pulsation may indicate that road conditions are hazardous and extra care is required while driving.

BRAKE ASSIST

When the force applied to the brake pedal exceeds a certain level, the Brake Assist is activated generating greater braking force than a conventional brake booster even with light pedal force.

⚠ WARNING

The Brake Assist is only an aid to assist braking operation and is not a collision warning or avoidance device. It is the driver's responsibility to stay alert, drive safely and be in control of the vehicle at all times.

VEHICLE DYNAMIC CONTROL (VDC) SYSTEM

BASIC INFORMATION

The VDC system uses various sensors to monitor driver inputs and vehicle motion. Under certain driving conditions, the VDC system helps to perform the following functions:

- Controls brake pressure to reduce wheel slip on one slipping drive wheel so power is transferred to a non-slipping drive wheel on the same axle.
- Controls brake pressure and engine output to reduce drive wheel slip based on vehicle speed (traction control function).
- Controls brake pressure at individual wheels and engine output to help the driver maintain control of the vehicle in the following conditions:
  - Understeer (vehicle tends to not follow the steered path despite increased steering input)
  - Oversteer (vehicle tends to spin due to certain road or driving conditions)

The VDC system can help the driver to maintain control of the vehicle, but it cannot prevent loss of vehicle control in all driving situations.

When the VDC system operates, the indicator light in the instrument panel flashes so note the following:

- The road may be slippery or the system may determine some action is required to help keep the vehicle on the steered path.
- You may feel a pulsation in the brake pedal and hear a noise or vibration from under the hood. This is normal and indicates that the VDC system is working properly.
- Adjust your speed and driving to the road conditions.

For additional information, see "Slip indicator light" (P. 95) and "Vehicle Dynamic Control (VDC) OFF indicator light" (P. 95).

If a malfunction occurs in the system, the and indicator lights come on in the instrument panel. The VDC system automatically turns off when these indicator lights are on.

The vehicle information display is used to turn off the VDC system. The indicator light, and the AEB with Pedestrian Detection system warning light will illuminate to indicate the VDC and AEB with Pedestrian Detection systems are off.

When the vehicle information display is used to turn off the system, the VDC system still operates to prevent one drive wheel from slipping by transferring power to a non-slipping drive wheel. The indicator light flashes if this occurs. All other VDC functions are off and the indicator light will not flash.

The VDC system is automatically reset to on when the ignition switch is placed in the OFF position then back to the ON position.

The computer has a built-in diagnostic feature that tests the system each time you start the engine and move the vehicle forward or in reverse at a slow speed. When the self-test occurs, you may hear a clunk noise and/or feel a pulsation in the brake pedal. This is normal and is not an indication of a malfunction.

WARNING

- **The VDC system is designed to help the driver maintain stability but does not prevent accidents due to abrupt steering operation at high speeds or by careless or dangerous driving techniques. Reduce vehicle speed and be especially careful when driving and cornering on slippery surfaces and always drive carefully.**
- **Do not modify the vehicle's suspension. If suspension parts such as shock absorbers, struts, springs, stabilizer bars, bushings and wheels are not NISSAN recommended for your vehicle or are extremely deteriorated, the VDC system may not operate properly. This could adversely affect vehicle handling performance, and the indicator light may flash or both the and OFF indicator lights may illuminate.**
- **If brake related parts such as brake pads, rotors and calipers are not NISSAN recommended or are extremely deteriorated, the VDC system may not operate properly and both the and the OFF indicator lights may illuminate.**
- **If engine control related parts are not NISSAN recommended or are extremely deteriorated, both the and OFF indicator lights may illuminate.**

- **When driving on extremely inclined surfaces such as higher banked corners, the VDC system may not operate properly and the indicator light may flash or both the and indicator lights may illuminate. Do not drive on these types of roads.**
- **When driving on an unstable surface such as a turntable, ferry, elevator or ramp, the indicator light may flash or both the and indicator lights may illuminate. This is not a malfunction. Restart the engine after driving onto a stable surface.**
- **If wheels or tires other than the NISSAN recommended ones are used, the VDC system may not operate properly and the indicator light may flash or both the and indicator lights may illuminate.**
- **The VDC system is not a substitute for winter tires or tire chains on a snow covered road.**

RISE-UP AND BUILD-UP

The system gradually adjusts braking power during normal braking to help provide an enhanced brake feel.

BRAKE FORCE DISTRIBUTION

During braking while driving through turns, the system optimizes the distribution of force to each of the four wheels depending on the radius of the turn.

WARNING

- **The VDC system is designed to help the driver maintain stability but does not prevent accidents due to abrupt steering operation at high speeds or by careless or dangerous driving techniques. Reduce vehicle speed and be especially careful when driving and cornering on slippery surfaces and always drive carefully.**
- **Do not modify the vehicle's suspension. If suspension parts such as shock absorbers, struts, springs, stabilizer bars, bushings and wheels are not NISSAN recommended for your vehicle or are extremely deteriorated, the VDC system may not operate properly. This could adversely affect vehicle handling performance, and the indicator light may flash or both the indicator lights may illuminate.**
- **If brake related parts such as brake pads, rotors and calipers are not NISSAN recommended or are extremely deteriorated, the VDC system may not operate properly and both the and the indicator lights may illuminate.**
- **If engine control related parts are not NISSAN recommended or are extremely deteriorated, both the and indicator lights may illuminate.**
- **When driving on extremely inclined surfaces such as higher banked corners, the VDC system may not operate properly and the indicator light may flash or both the and indicator lights may illuminate. Do not drive on these types of roads.**
- **When driving on an unstable surface such as a turntable, ferry, elevator or ramp, the indicator light may flash or both the and indicator lights may illuminate. This is not a malfunction. Restart the engine after driving onto a stable surface.**

- **If wheels or tires other than the NISSAN recommended ones are used, the VDC system may not operate properly and the indicator light may flash or both the and indicator lights may illuminate.**
- **The VDC system is not a substitute for winter tires or tire chains on a snow covered road.**

ACTIVE BRAKE LIMITED SLIP (ABLS) SYSTEM

- The ABLS system uses automatic braking to transfer power from a slipping drive wheel to the wheel on the same axle with more traction. The ABLS system applies braking to the slipping wheel, which helps redirect power to the other wheel.
- The ABLS system is always on. In some conditions, the system may automatically turn the ABLS system off. If the system is automatically turned off, normal brake function will continue. ABLS will function even when the Vehicle Dynamic Control system is turned off.
- The ABLS does not operate if both wheels on a drive axle are slipping.

WARNING

- **The ABLS system helps provide increased traction, but will not prevent accidents due to abrupt steering operation or by careless driving or dangerous driving practices. Reduce vehicle speed and be especially careful when driving and cornering on slippery surfaces. Always drive carefully.**
- **Do not modify the vehicle's suspension. If suspension parts such as shock absorbers, struts, springs, stabilizer bars, bushings and wheels are not NISSAN approved for your vehicle or are extremely deteriorated, the ABLS system may not operate properly. This could adversely affect vehicle handling performance, and the slip indicator light may illuminate.**
- **If brake related parts such as brake pads, rotors and calipers are not NISSAN recommended or are extremely deteriorated, the ABLS system may not operate properly and the slip indicator light may illuminate.**
- **If wheels or tires other than the NISSAN recommended ones are used, the ABLS system may not operate properly and the slip indicator light may illuminate.**

BASIC INFORMATION

The chassis control is an electric control module that includes the following functions:

- Intelligent Trace Control
- Active Ride Control (if so equipped)

INTELLIGENT TRACE CONTROL

This system senses driving based on the driver's steering and acceleration/braking patterns, and controls brake pressure at individual wheels to aid tracing at corners and help smooth vehicle response.

When the VDC system is turned off, the Intelligent Trace Control is also turned off.

Amount of brake control is changed depending on the mode selected by the Drive Mode Selector.

When the Intelligent Trace Control is not functioning properly, master warning light illuminates, and the warning message "Chassis Control System Error" will also appear in the vehicle information display.

If the chassis control warning message appears in the vehicle information display, it may indicate that the Intelligent Trace Control is not functioning properly. Have the system checked as soon as possible. It is recommended that you visit a NISSAN dealer for this service. For additional information, see "Vehicle information display warnings and indicators" (P. 116).

⚠WARNING

The Intelligent Trace Control may not be effective depending on the driving condition. Always drive carefully and attentively.

When the Intelligent Trace Control is operating, you may feel a pulsation in the brake pedal and hear a noise. This is normal and indicates that the Intelligent Trace Control is operating properly. You may also feel deceleration when the Intelligent Trace Control is operating. However, this is not a malfunction.

ACTIVE RIDE CONTROL (if so equipped)

This system senses upper body motion and controls four wheel brake pressure. This will enhance ride comfort in an effort to restrain uncomfortable upper body movement when passing over undulated road surfaces. When the VDC system is turned off, the Active Ride Control is also turned off.

If the chassis control warning message appears in the vehicle information display, it may indicate that the Active Ride Control is not functioning properly. Have the system checked as soon as possible. It is recommended that you visit a NISSAN dealer for this service.

⚠WARNING

The Active Ride Control may not be effective depending on the driving condition. Always drive carefully and attentively.

When the Active Ride Control is operating, you may feel a pulsation in the brake pedal and hear a noise. This is normal and indicates that the Active Ride Control is operating properly. You may also feel deceleration when the Active Ride Control is operating. However, this is not a malfunction.

⚠ WARNING

- **Never rely solely on the hill start assist system to prevent the vehicle from moving backward on a hill. Always drive carefully and attentively. Depress the brake pedal when the vehicle is stopped on a steep hill. Be especially careful when stopped on a hill on frozen or muddy roads. Failure to prevent the vehicle from rolling backwards may result in a loss of control of the vehicle and possible serious injury or death.**
- **The hill start assist system is not designed to hold the vehicle at a standstill on a hill. Depress the brake pedal when the vehicle is stopped on a steep hill. Failure to do so may cause the vehicle to roll backwards and may result in a collision or serious personal injury.**
- **The hill start assist may not prevent the vehicle from rolling backwards on a hill under all load or road conditions. Always be prepared to depress the brake pedal to prevent the vehicle from rolling backwards. Failure to do so may result in a collision or serious personal injury.**

When the vehicle is stopped on a hill, the hill start assist system automatically keeps the brakes applied. This helps prevent the vehicle from rolling backward in the time it takes the driver to release the brake pedal and apply the accelerator.

Hill start assist will operate automatically under the following conditions:

- The shift position is placed in a forward or reverse gear.
- The vehicle is stopped completely on a hill by applying the brake.
- The hill grade is above 5%.

The maximum holding time is two seconds. After two seconds the vehicle will begin to roll back and hill start assist will stop operating completely.

Hill start assist will not operate when the shift position is placed in N (Neutral) or P (Park) or on a flat and level road.

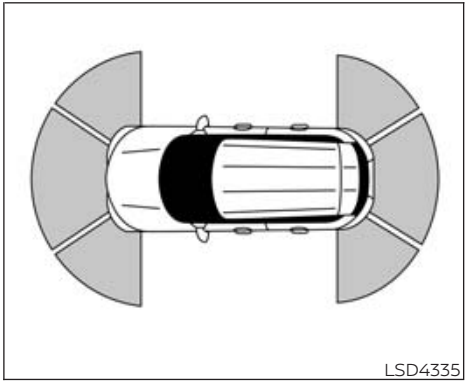

BASIC INFORMATION

The sonar system sounds a tone to inform the driver of obstacles around the vehicle using the sonar sensors located in the front and rear bumpers.

When the sonar system is turned on, the sonar view will automatically appear in the center display.

⚠ WARNING

- **The sonar system is a convenience but it is not a substitute for proper parking.**

- **The driver is always responsible for safety during parking and other maneuvers. Always look around and check that it is safe to do so before parking.**
- **Read and understand the limitations of the sonar system as contained in this section. The colors of the sonar indicator indicates different distances to the object.**
- **Inclement weather or ultrasonic sources such as an automatic car wash, a truck's compressed-air brakes or a pneumatic drill may affect the function of the system; this may include reduced performance or a false activation.**
- **The sonar system is designed as an aid to the driver in detecting large stationary objects to help avoid damaging the vehicle.**
- **The sonar system is not designed to prevent contact with small or moving objects. Always move slowly. The system will not detect small objects below the bumper, and may not detect objects close to the bumper or on the ground.**
- **The sonar system may not detect the following objects: fluffy objects such as snow, cloth, cotton, glass-wool, etc.; thin objects such as rope, wire and chain, etc.; or wedge-shaped objects.**
- **The front and rear sonar detect the distance between the vehicle and the obstacle by detecting the sound wave reflected from the surface of an obstacle. When there is a sound such as horn, or an ultrasonic source (such as sonar of other vehicles) around the vehicle, the sonar may not detect objects properly.**

If your vehicle sustains damage to the bumper fascia, leaving it misaligned or bent, the sensing zone may be altered causing inaccurate measurement of obstacles or false alarms.

⚠ CAUTION

- **Excessive noise (such as audio system volume or an open vehicle window) will interfere with the tone and it may not be heard.**
- **Keep the sonar sensors (located on the bumper fascia) free from snow, ice and large accumulations of dirt. Do not clean the sensors with sharp objects. If the sensors are covered, the accuracy of the sonar function will be diminished.**

SYSTEM OPERATION

The system informs with a visual and audible alert of front obstacles when the shift position is in the D (Drive) position and both front and rear obstacles when the shift position is in the R (Reverse) position.

Sonar Operation Table

FR Sensor

1. Range: P
- Sound: x
- Display: †

2. Range: R
- Sound: o
- Display: o

3. Range: N
- Sound: x
- Display: †

4. Range: D
- Sound: o
- Display: o

RR Sensor

1. Range: P
- Sound: x
- Display: †

2. Range: R
- Sound: o
- Display: o

3. Range: N
- Sound: x
- Display: †

4. Range: D
- Sound: x
- Display: †

o – Display/Beep when detect

† – Display on camera view

x – No Display and Beep

The system is deactivated at speeds above 6 mph (10 km/h). It is reactivated at lower speeds.

While the vehicle is moving the audible alert will stop after 3 seconds when an obstacle is detected by only the corner sensor and distance does not change. The audible alert will also stop when the obstacle moves away from the vehicle. At any time the left side button of the steering wheel (◀ ▶ buttons) is available to cancel the audible alert.

When the object is detected, the indicator (green) appears and blinks and the tone sounds intermittently. When the vehicle moves closer to the object, the color of the indicator turns yellow and the rate of the blinking increases. When the vehicle is very close to the object, the indicator stops blinking and turns red, and the tone sounds continuously.

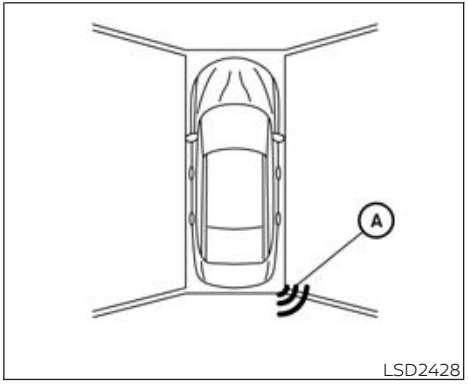

When the corner of the vehicle moves closer to an object, the corner sonar indicator Ⓐ appears.

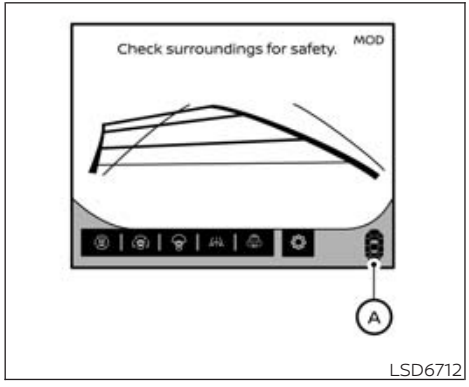

The system indicators Ⓐ (if so equipped) will appear when the vehicle moves closer to an object.

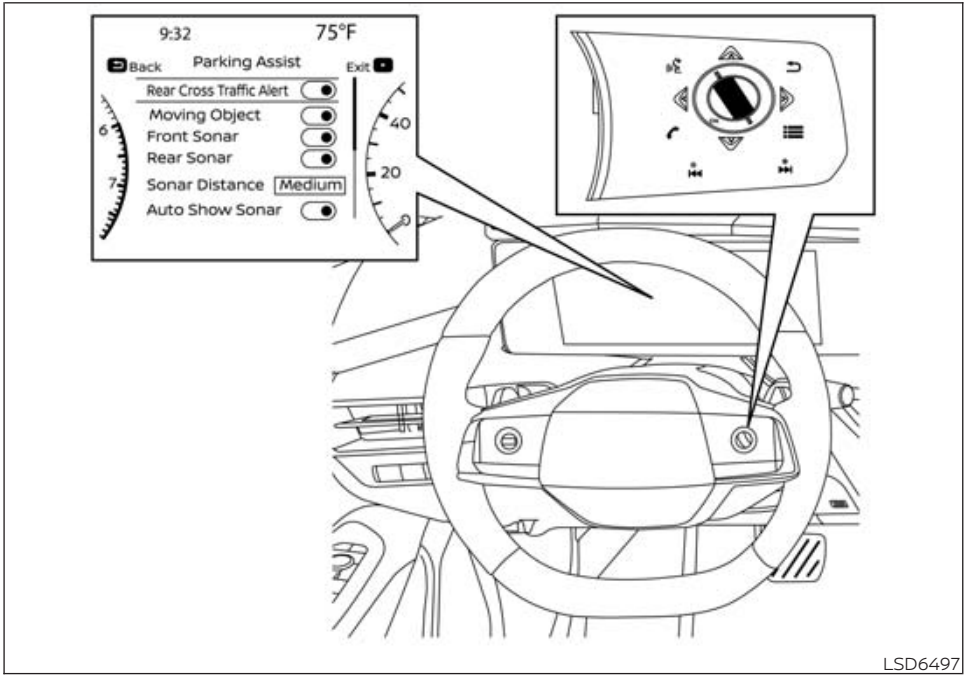

HOW TO ENABLE/DISABLE THE FRONT AND REAR SONAR SYSTEM

Perform the following steps to enable or disable the sonar system:

1. Press the ◀ ▶ button until "Settings" appears in the vehicle information display and then press OK. Use the scroll dial to select "Driver Assistance." Then press the OK button.
2. Select "Parking Assist" and press the OK button.
   - Select "Auto Show Sonar" and press the OK button to turn on or off the option to automatically display the sonar when activated.
   - Select "Front Sonar" and press the OK button to turn the front sonar sensors only on or off.
   - Select "Rear Sonar" and press the OK button to turn the rear sonar sensors only on or off.
   - Select "Sonar Distance" to change the sonar system distance to "Long," Medium" or "Short."
   - Select "Sonar Volume" to change the sonar system volume to "High," "Medium" or "Low."

NOTE:

The system automatically turns on every time the engine is started, as long as it is activated using the settings menu on the vehicle information display.

SONAR LIMITATIONS

⚠WARNING

Listed below are the system limitations for the sonar system. Failure to operate the vehicle in accordance with these system limitations could result in serious injury or death.

- **Read and understand the limitations of the sonar system as contained in this section. Inclement weather may affect the function of the sonar system; this may include reduced performance or a false activation.**
- **The sonar system is deactivated at speeds above 6 mph (10 km/h). It is reactivated at lower speeds.**
- **Inclement weather or ultrasonic sources such as an automatic car wash, a truck's compressed-air brakes or a pneumatic drill may affect the function of the sonar system; this may include reduced performance or a false activation.**
- **The sonar system is not designed to prevent contact with small or moving objects. Always move slowly. The system will not detect small objects below the bumper or on the ground.**
- **The sonar system may not detect the following objects: fluffy objects such as snow, cloth, cotton, glass-wool, etc.; thin objects such as rope, wire and chain, etc.; or wedge-shaped objects; complex shaped objects or multiple objects in close.**
- **The sonar system may not detect objects at speed above 3 mph (5 km/h) and may not detect certain angular or moving objects.**
- **The sonar system may not operate in the following conditions:**
  - **When rain, snow, ice, dirt, etc. adheres to the sonar.**
  - **When a loud sound is heard in the area around the vehicle.**
  - **When the surface of the obstacle is diagonal to the front or rear of the vehicle.**

- **When a sonar or the area around the sensor is extremely hot or cold.**

- **The sonar system may unintentionally operate in the following conditions:**
  - **When there is overgrown grass in the area around the vehicle.**
  - **When there are bumps, protrusions or manhole covers on the road surface.**
  - **When the vehicle drives through a draped flag or a curtain.**
  - **When there is an accumulation of snow or ice behind the vehicle.**
  - **When driving on a steep hill.**

SYSTEM TEMPORARILY UNAVAILABLE

When sonar blockage is detected, the system will be deactivated automatically.

The system is not available until the conditions no longer exist.

The sonar sensors may be blocked by temporary ambient conditions such as splashing water, mist or fog. The blocked condition may also be caused by objects such as ice, frost or dirt obstructing the sonar sensors.

Action to take:

When the above conditions no longer exist, the system will resume automatically.

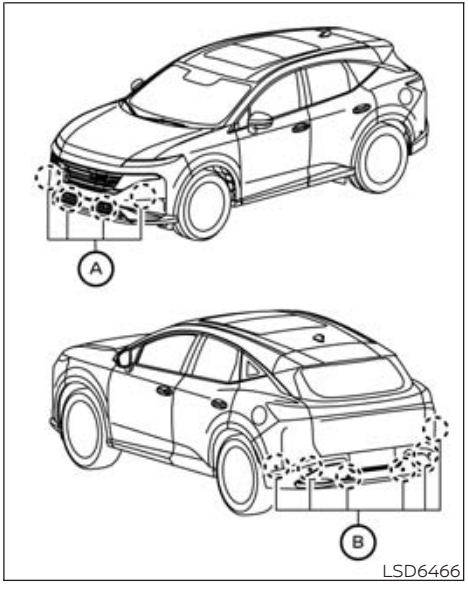

LSD6466

SYSTEM MAINTENANCE

The sonar sensors Ⓐ and Ⓑ are located on the front and rear bumpers. Always keep the area near the sonar sensors clean.

The sonar sensors may be blocked by temporary ambient conditions such as splashing water, mist or fog.

The blocked condition may also be caused by objects such as ice, frost or dirt obstructing the sonar sensors.

Check for and remove objects obstructing the area around the sonar sensors.

Do not attach stickers (including transparent material), install accessories or apply additional paint near the sonar sensors.

Do not strike or damage the area around the sonar sensors. It is recommended that you visit a NISSAN dealer if the area around the sonar sensors is damaged due to a collision.

BASIC INFORMATION

The Idling Stop System activates to prevent unnecessary fuel consumption, exhaust emissions and noise.

- When you stop the vehicle, the engine is turned off automatically.
- When you release the brake pedal to begin moving again, the engine is turned on automatically.

⚠ WARNING

The engine restarts if the vehicle moves at approximately 1 mph (2 km/h) or more (on a downhill grade, etc.) while the engine is turned off by the Idling Stop System. Depress the brake pedal immediately to stop the vehicle to prevent an accident.

⚠ CAUTION

At the end of the journey the engine must be stopped and ignition switch be pushed off. Lock the vehicle as normal. Pushing the ignition switch off will shut down all electrical systems. Failure to do this may result in a discharged battery.

NOTE:

The Idling Stop System will not activate under the following conditions:

- **When the engine is kept idling without the vehicle being driven after the engine is turned on.**
- **When the engine coolant temperature is low.**
- **When the battery capacity is low.**
- **When the battery temperature is low.**
- **When the vehicle is moving.**
- **When a negative pressure booster decreases.**
- **When the engine hood is opened with the engine running.**
- **When the engine is turned on with the engine hood open.**
- **When the driver's seat belt is not fastened.**
- **When the driver's door is open.**
- **When the steering wheel is operated.**
- **When the Idling Stop System indicator blinks.**
- **When the fan speed control is in any position other than "OFF," (0) while the air flow control is in the front defroster position.**

- When the front defroster switch is on.
- When the rear window defroster switch is on.
- When the temperature inside the vehicle is lower than approximately 60°F (15°C), unless the Air Conditioning ECO customize option is selected, and the ECO driving mode is on.
- When the temperature inside the vehicle is higher than approximately 86°F (30°C), unless the Air Conditioning ECO customize option is selected, and the ECO driving mode is on. (When the air conditioner is off, the Idling Stop System will operate.)
- When the Idling Stop OFF switch is turned on.
- When the power consumption is large.
- When the altitude is high.
- When the accelerator pedal is depressed.
- When the shift position is in any range other than D (Drive).
- When the brake pedal is not firmly depressed.
- When stopping the vehicle on steep sloping roads.

NOTE:

The Idling Stop System may not activate when the Intelligent Key is not in the vehicle and you open/close any door.

The engine will not restart even if the brake pedal is released while the Idling Stop System is activated under the following conditions: (The engine may restart under other conditions.)

- When the automatic brake hold system is activated.
- When the engine hood is opened.

NOTE:

It may take some time until the Idling Stop System activates under the following conditions:

- When the battery is discharged.
- When the outside temperature is low or high.
- When the battery is replaced or the battery terminal is disconnected for extended periods and then reconnected.

NOTE:

When the Idling Stop System indicator light illuminates, the engine starts running automatically under at least one of the following conditions:

- The vacuum pressure for the brake system is not enough as the brake pedal is repeatedly depressed.
- The driver's seat belt is unfastened, or the driver's door is open.
- The battery voltage becomes low (due to electrical load from other vehicle systems like headlights, heaters, etc., or auxiliary devices connected to the 12 volt socket inside the vehicle).
- The vehicle speed is above about 1 mph (2 km/h).
- When the rear window defroster is operated.
- When the temperature inside the vehicle is lower than approximately 60°F (15°C), unless the Air Conditioning ECO customize option is selected, and the ECO driving mode is on.

- **When the temperature inside the vehicle is higher than approximately 86°F (30°C), unless the Air Conditioning ECO customize option is selected, and the ECO driving mode is on. (When the air conditioner is off, the Idling Stop System will operate.)**
- **When the front defroster is turned on.**
- **When more than 3 minutes have elapsed since the Idling Stop System was active.**
- **When the accelerator pedal is depressed.**
- **When the steering wheel is operated. (The steering wheel operation may become heavy, but this is not a malfunction.)**
- **When the battery capacity is low.**
- **When the power consumption is high.**
- **When the shift position is in any range other than D (Drive).**
- **When the Idling Stop OFF switch is pushed.**
- **When the negative pressure of the brake system is not sufficiently applied by depressing the brake pedal several times.**

NOTE:

The Idling Stop System may not activate when the Intelligent Key is not in the vehicle and you open/close any door.

NOTE:

The following condition will prevent the Idling Stop System from automatically restarting the engine. Starting the engine with the ignition switch operation is then necessary:

- **The hood is open.**

Use this system while waiting at a stop light, etc. When the vehicle is stopped for long periods of time, turn off the engine.

When the engine is stopped by the Idling Stop System, heating, cooling and dehumidifying functions will be deactivated. To avoid the air conditioning functions from being deactivated, turn off the Idling Stop System by pushing the Idling Stop OFF switch.

RETROGRADE MOVEMENT CONTROL FUNCTION

This system is designed to reduce the retrograde movement that occurs while the driver's foot changes from depressing the brake pedal to the accelerator pedal when moving the vehicle while the Idling Stop System is active on a hilly road.

IDLING STOP SYSTEM DISPLAY

The status of the Idling Stop System can be checked in the vehicle information display.

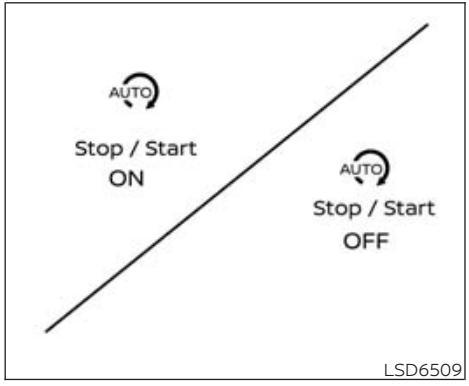

Idling Stop System ON or OFF

If the Idling Stop System is activated or deactivated using the Idling Stop OFF switch, the message is shown.

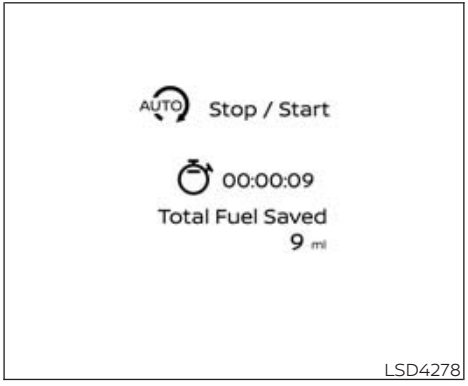

Fuel saved and engine stop time

The fuel saved and the engine stop time mode shows the following items:

- The fuel saved shows the estimated quantity of fuel that was saved by the Idling Stop System every time the engine is automatically stopped.
- The engine stop time shows the time that the engine has been stopped for by the Idling Stop System.

The total fuel saved and the engine stop time can also be checked in the vehicle information display. For additional information, see "Vehicle information display" (P. 97).

Auto start deactivation

If the engine stops when the Idling Stop System is activated and will not start automatically, the message is shown.

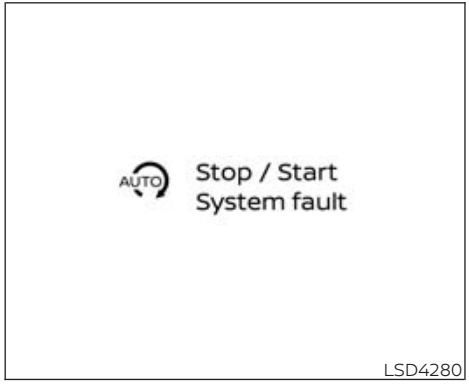

System fault

This message is displayed when the Idling Stop System is malfunctioning.

It is recommended that you have the system checked. It is recommended that you visit a NISSAN dealer for this service.

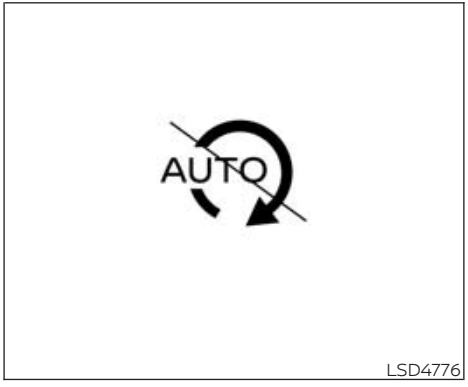

Idling Stop inhibition

This indicator is displayed when the vehicle is stopped if the engine is prevented from automatically stopping by the Idling Stop system under the inhibition conditions. For additional information, see "Idling Stop System" (P. 445).

Idling Stop guidance display (further depressing the brake pedal)

When the vehicle is stopped, and the ISS screen is shown in the vehicle information display, the guidance is displayed if the Idling Stop system is deactivated due to not fully depressing the brake pedal.

If you wish to activate the Idling Stop system, further depress the brake pedal. For additional information, see "Idling Stop System" (P. 445).

The display appears when Fuel saved and engine stop time is selected on the vehicle information display.

The display disappears under the following conditions:

- The Idling Stop system is activated.
- The vehicle starts running.

Idling Stop guidance display (detection of the steering operation)

When the vehicle is stopped, and the ISS screen is shown in the vehicle information display, the guidance is displayed if the Idling Stop system is deactivated since the steering operation is detected.

The Idling Stop system is deactivated due to steering operation being detected. For additional information, see "Idling Stop System" (P. 445).

The display appears when Fuel saved and engine stop time is selected on the vehicle information display.

The display disappears under the following conditions:

- The Idling Stop system is activated.
- The vehicle starts running.

Idling Stop guidance display (placing priority on the air conditioner)

When the vehicle is stopped, and the ISS screen is shown in the vehicle information display, the guidance is displayed if the Idling Stop system is deactivated since the air conditioner (cooling, heating or dehumidifying functions) is given priority.

The Idling Stop system is deactivated since the air conditioner is given priority. For additional information, see "Idling Stop System" (P. 445).

The display appears when Fuel saved and engine stop time is selected on the vehicle information display.

The display disappears under the following conditions:

- The Idling Stop system is activated.
- The vehicle starts running.

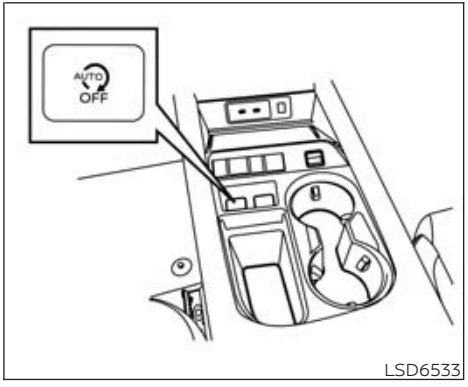

IDLING STOP OFF SWITCH

The system can be temporarily deactivated by pushing the Idling Stop OFF switch. Pushing the switch again or restarting the engine by using the ignition switch will reactivate the Idling Stop System.

- When the Idling Stop System is deactivated while the engine is running, the engine is prevented from automatically stopping.

- When the Idling Stop System is deactivated after the engine has been automatically stopped by the Idling Stop System, the engine will immediately restart if suitable conditions are present. The engine will then be prevented from automatically stopping during the same journey.

NOTE:

- **The Idling Stop System ON or OFF message is displayed for a few seconds in the vehicle information display when the Idling Stop System OFF switch is pushed. For additional information, see "Idling Stop System Display" (P. 447).**
- **The Idling Stop System resets to ON every time the ignition switch is switched from the OFF position to the ON position.**
- **It is best to disable the ISS system when towing a trailer. You can do this by pushing the Idling Stop OFF switch.**

FREEING A FROZEN DOOR LOCK

To prevent a door lock from freezing, apply de-icer through the key hole. If the lock becomes frozen, heat the key before inserting it into the key hole, or use the NISSAN Intelligent Key®.

ANTIFREEZE

In the winter when it is anticipated that the temperature will drop below 32°F (0°C), check the antifreeze to assure proper winter protection. For additional information, see "Engine cooling system" (P. 488).

BATTERY

If the battery is not fully charged during extremely cold weather conditions, the battery fluid may freeze and damage the battery. To maintain maximum efficiency, the battery should be checked regularly. For additional information, see "Battery" (P. 496).

DRAINING OF COOLANT WATER

If the vehicle is to be left outside without antifreeze, drain the cooling system, including the engine block. Refill before operating the vehicle. For additional information, see "Changing engine coolant" (P. 489).

TIRE EQUIPMENT

1. SUMMER tires have a tread designed to provide superior performance on dry pavement. However, the performance of these tires will be substantially reduced in snowy and icy conditions. If you operate your vehicle on snowy or icy roads, NISSAN recommends the use of MUD & SNOW or ALL SEASON TIRES on all four wheels. It is recommended that you visit a NISSAN dealer for the tire type, size, speed rating and availability information.
2. For additional traction on icy roads, studded tires may be used. However, some U.S. states and Canadian provinces prohibit their use. Check local, state and provincial laws before installing studded tires.

   Skid and traction capabilities of studded snow tires on wet or dry surfaces may be poorer than that of non-studded snow tires.
3. Tire chains may be used. For additional information, see "Tire chains" (P. 520).

SPECIAL WINTER EQUIPMENT

Basic Information

It is recommended that the following items be carried in the vehicle during winter:

- A scraper and stiff-bristled brush to remove ice and snow from the windows and wiper blades.
- A sturdy, flat board to be placed under the jack to give it firm support.
- A shovel to dig the vehicle out of snowdrifts.
- Extra washer fluid to refill the windshield-washer fluid reservoir.

All-Wheel Drive (AWD) model

If you install snow tires, they must also be the same size, brand, construction and tread pattern on all four wheels.

DRIVING ON SNOW OR ICE

⚠ WARNING

- **Wet ice (32˚F, 0˚C and freezing rain), very cold snow or ice can be slick and very hard to drive on. The vehicle will have much less traction or "grip" under these conditions. Try to avoid driving on wet ice until the road is salted or sanded.**
- **Whatever the condition, drive with caution. Accelerate and slow down with care. If accelerating or downshifting too fast, the drive wheels will lose even more traction.**
- **Allow more stopping distance under these conditions. Braking should be started sooner than on dry pavement.**
- **Allow greater following distances on slippery roads.**
- **Watch for slippery spots (glare ice). These may appear on an otherwise clear road in shaded areas. If a patch of ice is seen ahead, brake before reaching it. Try not to brake while on the ice, and avoid any sudden steering maneuvers.**
- **Do not use the cruise control on slippery roads.**
- **Snow can trap dangerous exhaust gases under your vehicle. Keep snow clear of the exhaust pipe and from around your vehicle.**

ENGINE BLOCK HEATER (if so equipped)

Engine block heaters are used to assist with cold temperature starting.

The engine block heater should be used when the outside temperature is 20˚F (-7˚C) or lower.

⚠ WARNING

- **Do not use your engine block heater with an ungrounded electrical system or a 2-pronged adapter. You can be seriously injured by an electrical shock if you use an ungrounded connection.**
- **Disconnect and properly store the engine block heater cord before starting the engine. Damage to the cord could result in an electrical shock and can cause serious injury.**
- **Use a heavy-duty 3-wire, 3-pronged extension cord rated for at least 10 A. Plug the extension cord into a Ground Fault Interrupt (GFI) protected, grounded 110-VAC outlet. Failure to use the proper extension cord or a grounded outlet can result in a fire or electrical shock and cause serious personal injury.**

To use the engine block heater:

1. Turn the engine off.
2. Open the hood and unwrap the engine block heater cord.
3. Plug the engine block heater cord into a grounded 3-wire, 3-pronged extension cord.
4. Plug the extension cord into a Ground Fault Interrupt (GFI) protected, grounded 110-volt AC (VAC) outlet.
5. The engine block heater must be plugged in for at least 2 - 4 hours, depending on outside temperatures, to properly warm the engine coolant. Use an appropriate timer to turn the engine block heater on.
6. Before starting the engine, unplug and properly store the cord to keep it away from moving parts.

ACTIVE NOISE CANCELLATION (if so equipped)

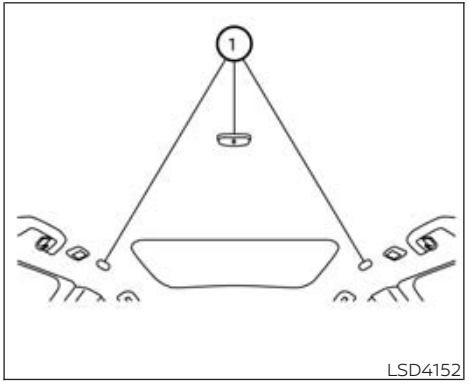

Rear Microphone

ACTIVE NOISE CANCELLATION

This system uses microphones ① located inside the vehicle to detect engine booming noise. The system then automatically generates a noise canceling sound through the speakers and woofer (if so equipped) to reduce engine booming noise.

NOTE:

To operate the active noise cancellation system properly:

- **Do not cover the speakers or woofer (if so equipped).**
- **Do not cover the microphones.**
- **Do not change or modify speakers including the woofer (if so equipped) and any audio related components such as the amplifier.**
- **Do not make any modification including sound deadening or modifications around the microphones or speakers.**

ACTIVE SOUND ENHANCEMENT

Active sound enhancement enhances existing engine sounds according to the engine speed and driving modes through the speakers and woofer (if so equipped).

6 In case of emergency

Hazard warning flasher switch 456
Emergency engine shut off 456
Flat tire 457
Tire Pressure Monitoring System (TPMS) 457
Changing a flat tire (models with spare tire) 458
Repairing a flat tire (models with emergency tire puncture repair kit) 464
Jump starting 470
Push starting 472
If your vehicle overheats 472
Towing your vehicle 473
Basic information 473
Towing recommended by NISSAN 473
Vehicle recovery (freeing a stuck vehicle) 476

HAZARD WARNING FLASHER SWITCH

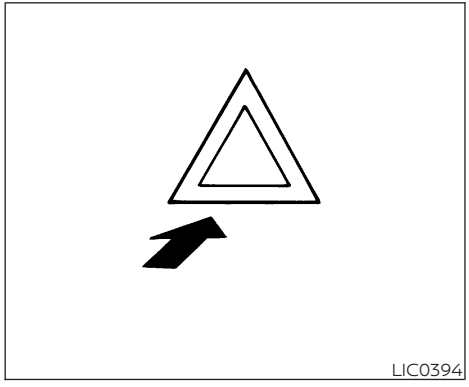

Push the switch on to warn other drivers when you must stop or park under emergency conditions. All turn signal lights flash.

⚠ WARNING

- **If stopping for an emergency, be sure to move the vehicle well off the road.**
- **Do not use the hazard warning flashers while moving on the highway unless unusual circumstances force you to drive so slowly that your vehicle might become a hazard to other traffic.**
- **Turn signals do not work when the hazard warning flasher lights are on.**

The flashers will operate with the ignition switch placed in any position.

Some jurisdictions may prohibit the use of the hazard warning flasher switch while driving.

EMERGENCY ENGINE SHUT OFF

To shut off the engine in an emergency situation while driving, perform the following procedure:

- Rapidly push the push-button ignition switch three consecutive times in less than 1.5 seconds, or
- Push and hold the push-button ignition switch for more than 2 seconds.

TIRE PRESSURE MONITORING SYSTEM (TPMS)

This vehicle is equipped with the Tire Pressure Monitoring System (TPMS). It monitors tire pressure of all tires except the spare. When the low tire pressure warning light is lit, and the "Tire Pressure Low - Add Air" warning appears in the vehicle information display, one or more of your tires is significantly under-inflated. If equipped, the system also displays pressure of all tires (except the spare tire) on the display screen by sending a signal from a sensor that is installed in each wheel. If the vehicle is being driven with low tire pressure, the TPMS will activate and warn you of it by the low tire pressure warning light. This system will activate only when the vehicle is driven at speeds above 16 mph (25 km/h). For additional information, see "Warning lights, indicator lights and audible reminders" (P. 86) and "Tire Pressure Monitoring System (TPMS)" (P. 271).

⚠WARNING

- **Radio waves could adversely affect electric medical equipment. Those who use a pacemaker should contact the electric medical equipment manufacturer for the possible influences before use.**
- **If the low tire pressure warning light illuminates while driving, avoid sudden steering maneuvers or abrupt braking, reduce vehicle speed, pull off the road to a safe location and stop the vehicle as soon as possible. Driving with under-inflated tires may permanently damage the tires and increase the likelihood of tire failure. Serious vehicle damage could occur and may lead to an accident and could result in serious personal injury. Check the tire pressure for all four tires. Adjust the tire pressure to the recommended COLD tire pressure shown on the Tire and Loading Information label to turn the low tire pressure warning light OFF. If the light still illuminates while driving after adjusting the tire pressure, a tire may be flat or the TPMS may be malfunctioning. If you have a flat tire, replace it with a spare tire (if so equipped) or repair it with the emergency tire puncture repair kit (if so equipped) as soon as possible. If no tire is flat and all tires are properly inflated, have the vehicle checked. it is recommended that you visit a NISSAN dealer for this service.**
- **When using a wheel without TPMS such as the spare tire, the TPMS will not function and the low tire pressure warning light will flash for approximately one minute. The light will remain on after one minute. Have your tires replaced and/or TPMS system reset as soon as possible. It is recommended that you visit a NISSAN dealer for these services.**
- **Replacing tires with those not originally specified by NISSAN could affect the proper operation of the TPMS.**
- **The Genuine NISSAN Emergency Tire Repair Sealant (if so equipped) or equivalent can be used for temporarily repairing a tire . Do not inject any other tire sealant into the tires, as this may cause a malfunction of the tire pressure sensors.**

- **To help avoid serious personal injury or death, when checking your tire pressure, either as part of routine maintenance or because of a TPMS alert, please check the pressure in all of your tires. Driving on underinflated tires can cause tire failure and interfere with the proper operation of other vehicle systems.**

CHANGING A FLAT TIRE (models with spare tire)

Basic information

If you have a flat tire, follow the instructions in this section.

Stopping the vehicle

1. Safely move the vehicle off the road and away from traffic.
2. Turn on the hazard warning flashers.
3. Park on a level surface and apply the parking brake. Press the park button to shift to the P (Park) position.
4. Turn off the engine.
5. Raise the hood to warn other traffic and to signal professional road assistance personnel that you need assistance.
6. Have all passengers get out of the vehicle and stand in a safe place, away from traffic and clear of the vehicle.

⚠WARNING

- **Make sure the parking brake is securely applied and the shift position is placed in the P (Park) position.**
- **Never change tires when the vehicle is on a slope, ice or slippery areas. This is hazardous.**
- **Never change tires if oncoming traffic is close to your vehicle. Wait for professional road assistance.**

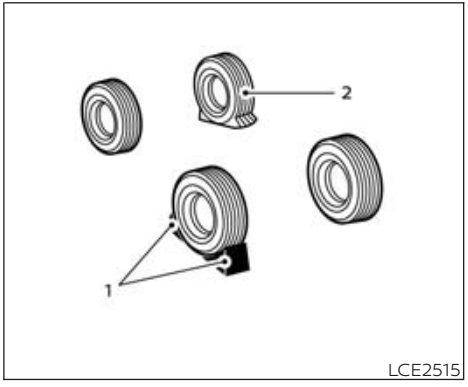

Blocking wheels

1. Blocks
2. Flat tire

Place suitable blocks at both the front and back of the wheel diagonally opposite the flat tire to prevent the vehicle from moving when it is jacked up.

⚠WARNING

Be sure to block the wheel as the vehicle may move and result in personal injury.

Getting the spare tire and tools

1. Open the rear liftgate.

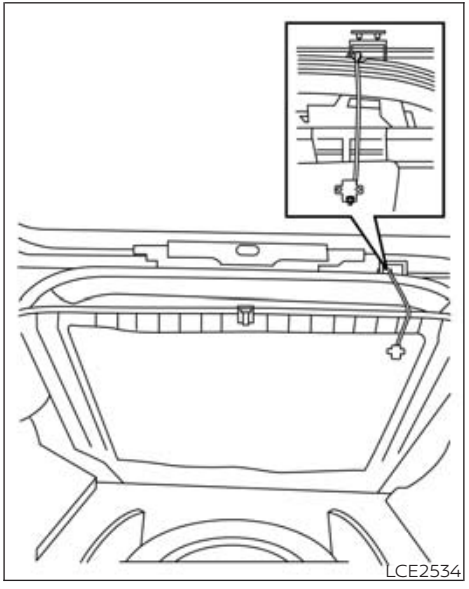

2. Pull up on the strap to lift the carpeted floorboard and attach the hook as shown.

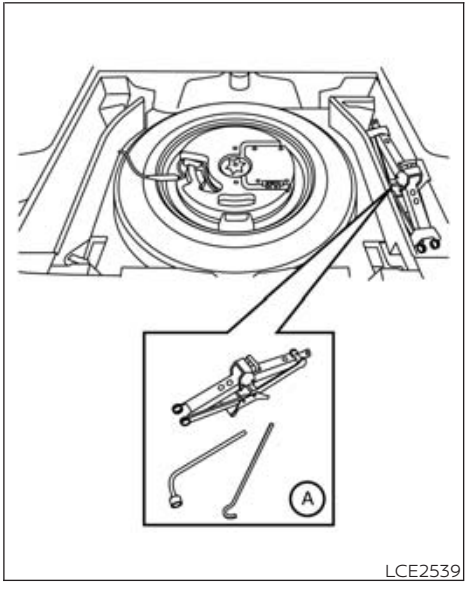

3. Remove the jack and tools Ⓐ from the storage area.

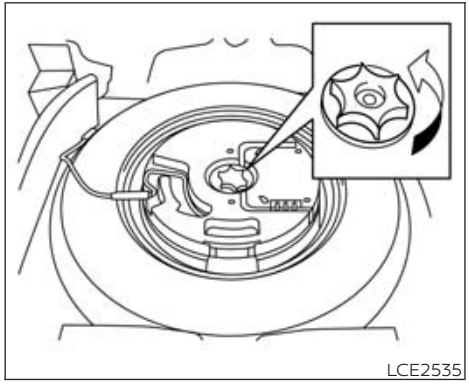

4. To remove the spare tire, loosen the bolt by turning counterclockwise.
5. Once free, remove the bolt.

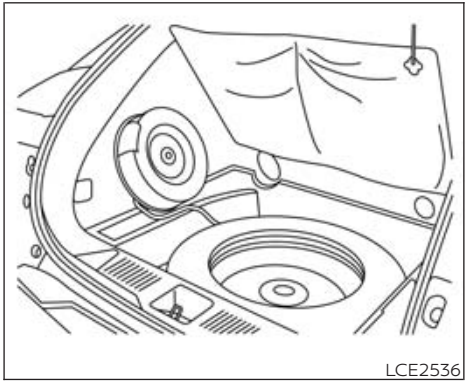

6. Place the sub-woofer in the lower left corner of the cargo area, leaning against the driver side wall.
7. Remove the spare tire.

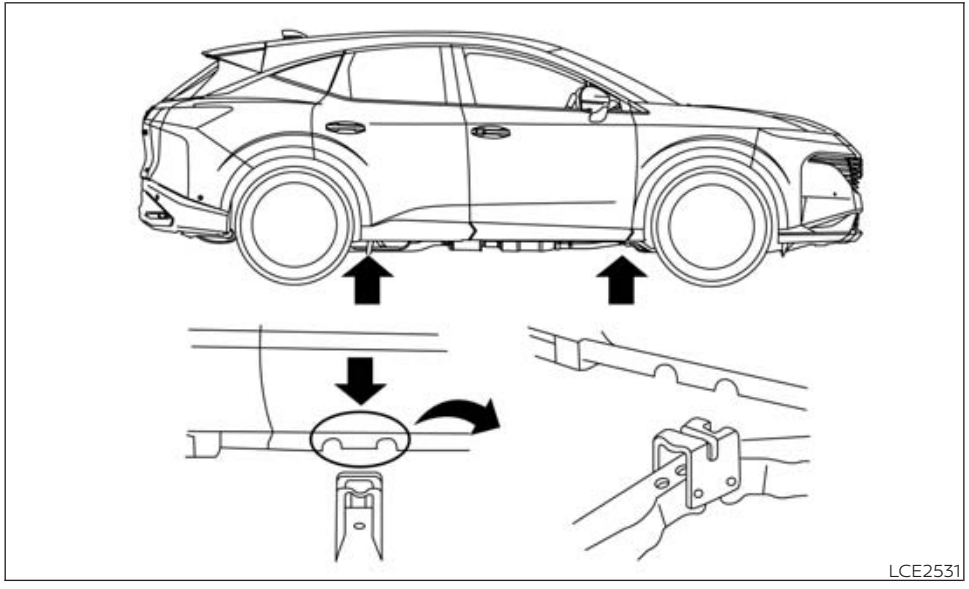

Jacking up vehicle and removing the damaged tire

⚠ WARNING

- **Never get under the vehicle while it is supported only by the jack. If it is necessary to work under the vehicle, support it with safety stands.**
- **Use only the jack provided with your vehicle to lift the vehicle. Do not use the jack provided with your vehicle on other vehicles. The jack is designed for lifting only your vehicle during a tire change.**
- **Use the correct jack-up points. Never use any other part of the vehicle for jack support.**
- **Never jack up the vehicle more than necessary.**
- **Never use blocks on or under the jack.**
- **Do not start or run the engine while vehicle is on the jack. It may cause the vehicle to move. This is especially true for vehicles with limited slip differentials.**
- **Do not allow passengers to stay in the vehicle while it is on the jack.**
- **Never run the engine with a wheel(s) off the ground. It may cause the vehicle to move.**

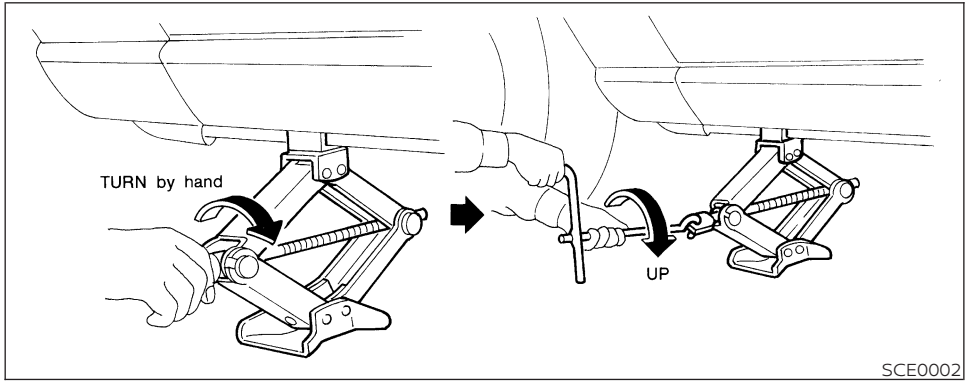

Always refer to the illustrations for the correct placement and jack-up points for your specific vehicle model and jack type.

Carefully read the caution label attached to the jack body and the following instructions.

1. Loosen each wheel nut 1 or 2 turns by turning counterclockwise with the wheel nut wrench. **Do not remove the wheel nuts until the tire is off the ground.**
2. Place the jack directly under the jack-up point as illustrated so the top of the jack contacts the vehicle at the jack-up point. Align the jack head between the 2 notches in the front or the rear as shown. Also fit the groove of the jack head between the notches as shown.

   The jack should be used on firm and level ground.
3. To lift the vehicle, securely hold the jack lever and rod with both hands. Carefully raise the vehicle until the tire clears the ground. Remove the wheel nuts, and then remove the tire.

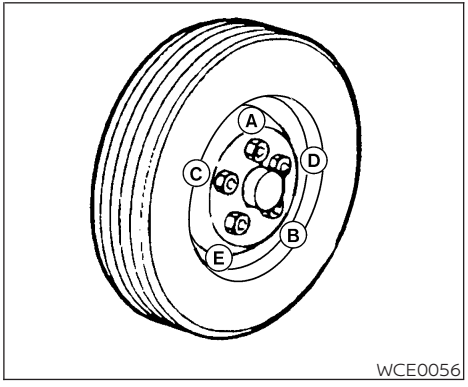

Installing the spare tire

The spare tire is designed for emergency use. For additional information, see "Wheels and tires" (P. 511).

1. Clean any mud or dirt from the surface between the wheel and hub.
2. Carefully put the spare tire on and tighten the wheel nuts finger tight.
3. With the wheel nut wrench, tighten wheel nuts alternately and evenly in the sequence illustrated (Ⓐ, Ⓑ, Ⓒ, Ⓓ, Ⓔ) until they are tight.

4. Lower the vehicle slowly until the tire touches the ground. Then, with the wheel nut wrench, tighten the wheel nuts securely in the sequence illustrated (Ⓐ, Ⓑ, Ⓒ, Ⓓ, Ⓔ). Lower the vehicle completely.

⚠WARNING

- **Incorrect wheel nuts or improperly tightened wheel nuts can cause the wheel to become loose or come off. This could cause an accident.**
- **Do not use oil or grease on the wheel studs or nuts. This could cause the nuts to become loose.**
- **Retighten the wheel nuts when the vehicle has been driven for 621 miles (1,000 km) (also in cases of a flat tire, etc.).**

As soon as possible, tighten the wheel nuts to the specified torque with a torque wrench.

Wheel nut tightening torque:
83 ft-lb (113 N·m)

The wheel nuts must be kept tightened to specification at all times. It is recommended that wheel nuts be tightened to specifications at each lubrication interval.

Adjust tire pressure to the COLD pressure.

COLD pressure: After vehicle has been parked for 3 hours or more or driven less than 1 mile (1.6 km).

COLD tire pressures are shown on the tire and loading information label affixed to the driver side center pillar.

After adjusting tire pressure to the COLD tire pressure, the display (if so equipped) of the tire pressure information may show higher pressure than the COLD tire pressure after the vehicle has been driven more than 1 mile (1.6 km). This is because the tire pressure increases as the tire temperature rises. This does not indicate a system malfunction.

5. Loosely secure the sub-woofer in the spare tire well by turning the bolt clockwise several turns.

⚠CAUTION

Do not over-tighten retaining bolt, vehicle component damage will occur.

6. Securely store the tools and jacking equipment in the vehicle.
7. Lower the carpeted floorboard back over the tire well and secure the flat tire.
8. Close the rear liftgate.

⚠WARNING

- **Always make sure that the spare tire and jacking equipment are properly secured after use below the top level of the seatback. Such items can become dangerous projectiles in an accident or sudden stop.**

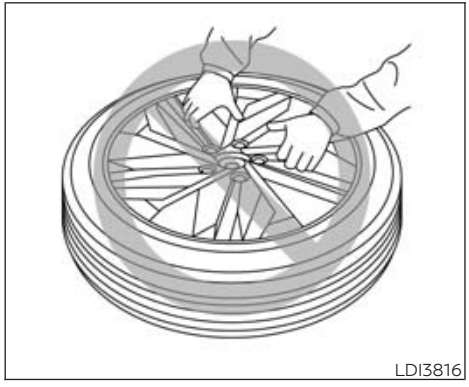

Handling of wheel insert (if so equipped)

Do not remove the insert from the wheel. It is recommended that you visit a NISSAN dealer if removal is necessary.

If the insert is not fitted firmly, or a rattle noise is heard from the wheel when driving, it is recommended that you visit a NISSAN dealer.

⚠ CAUTION

- **Do not lift up the wheel by holding the insert portion. This can lead to injury or wheel damage.**
- **Do not attempt to remove the wheel insert. This can lead to injury or wheel damage.**

REPAIRING A FLAT TIRE (models with emergency tire puncture repair kit)

Basic information

⚠ WARNING

- **After using Genuine NISSAN Emergency Tire Sealant to repair a minor tire puncture, do not drive the vehicle at speeds faster than 50 mph (80 km/h).**
- **Immediately after using the Genuine NISSAN Emergency Tire Sealant to repair a minor tire puncture, it is recommended that you visit a NISSAN dealer. The Genuine NISSAN Emergency Tire Sealant cannot permanently seal a punctured tire. Continuing operation of the vehicle without a permanent tire repair can lead to a crash.**
- **If you used the Genuine NISSAN Emergency Tire Sealant to repair a minor tire puncture, it is recommended that you visit a NISSAN dealer to replace the TPMS sensor in addition to repairing or replacing the tire.**
- **NISSAN recommends using only Genuine NISSAN Emergency Tire Sealant provided with your vehicle. Other tire sealants may damage the valve stem seal which can cause the tire to lose air pressure.**

This vehicle does not have a spare tire. The emergency tire puncture repair kit (Genuine NISSAN Emergency Tire Sealant) is supplied with the vehicle instead of a spare tire. It can be used to temporarily repair minor tire punctures.

If possible, have the vehicle towed to a facility that can repair or replace the flat tire. Using the emergency tire puncture repair kit may cause a malfunction of the tire pressure sensor and cause the low tire pressure warning light to illuminate.

⚠ CAUTION

- **To avoid the emergency tire puncture kit being damaged during storage or use:**
  - **Only use the emergency tire puncture repair kit on your vehicle. Do not use it on other vehicles.**
  - **Only use the kit to inflate the tires of your vehicle and to check the vehicle's tire pressure.**
  - **Only plug the compressor into a 12-volt DC car power point.**
  - **Keep the kit free of water and dirt.**
  - **Do not disassemble or modify the kit.**
  - **Do not drop the kit or allow hard impacts to the kit.**
- **Do not use the emergency tire puncture repair kit under the following conditions. It is recommended that you visit a NISSAN dealer or professional road assistance.**
  - **when the sealant has passed its expiration date (shown on the label attached to the bottle)**
  - **when the cut or the puncture is approximately 0.25 in (6 mm) or longer**
  - **when the tire sidewall is damaged**
  - **when the vehicle has been driven with extremely low tire pressure**
  - **when the tire has come off the inside or the outside of the wheel**
  - **when the tire wheel is damaged**
  - **when two or more tires are flat**

If you have a flat tire, follow the instructions below.

Stopping the vehicle

1. Safely move the vehicle off the road and away from traffic.
2. Turn on the hazard warning flashers.
3. Park on a level surface and apply the parking brake. Press the park button to shift to the P (Park) position.
4. Turn off the engine.
5. Raise the hood to warn other traffic and to signal professional road assistance personnel that you need assistance.
6. Have all passengers get out of the vehicle and stand in a safe place, away from traffic and clear of the vehicle.

⚠ WARNING

- **Make sure the parking brake is securely applied and the shift position is placed in the P (Park) position.**
- **Never change tires when the vehicle is on a slope, ice or slippery areas. This is hazardous.**
- **Never change tires if oncoming traffic is close to your vehicle. Wait for professional road assistance.**

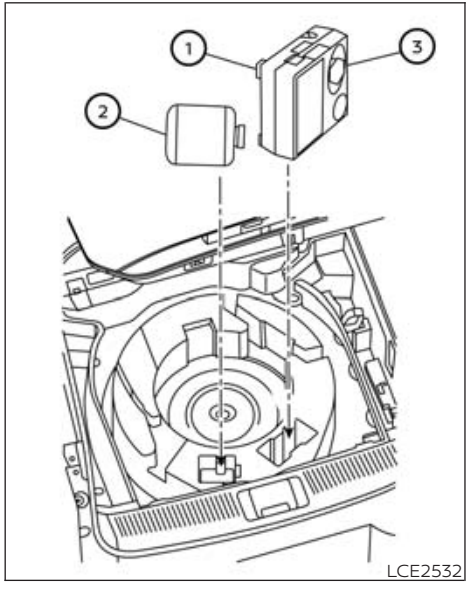

Getting emergency tire puncture repair kit

Take out the emergency tire puncture repair kit located in the cargo area. The repair kit consists of the following items:

1. Air compressor*
2. Tire sealant bottle
3. Speed restriction sticker

* The compressor shape may differ depending on the models.

NOTE:

For models with the emergency tire puncture repair kit, a spare tire, jack and rod are not equipped as standard.

Before using emergency tire puncture repair kit

- If any foreign object (for example, a screw or nail) is embedded in the tire, do not remove it.
- Check the expiration date of the sealant (shown on the label attached to the bottle). Never use a sealant whose expiration date has passed.

Repairing tire

⚠WARNING

Observe the following precautions when using the tire repair compound.

- **Swallowing the compound is dangerous. Immediately drink as much water as possible and seek prompt medical assistance.**
- **Rinse well with lots of water if the compound comes into contact with skin or eyes. If irritation persists, seek prompt medical attention.**
- **Keep the repair compound out of the reach of children.**
- **The emergency repair compound may cause a malfunction of the tire pressure sensors and cause the low tire pressure warning light to illuminate. Have the tire pressure sensor replaced as soon as possible.**

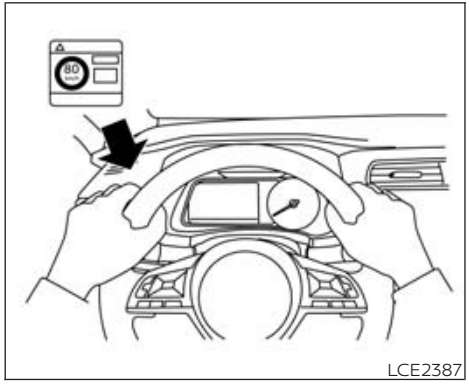

LCE2387

1. Take out the speed restriction sticker from the air compressor, then put it in a location where the driver can see it while driving.

⚠ CAUTION

Do not put the speed restriction label on the steering wheel pad, the speedometer or the warning light locations.

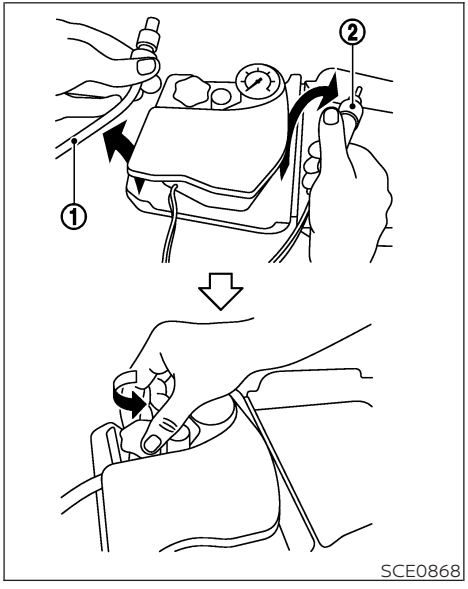

SCE0868

2. Take the hose ① and the power plug ② out of the air compressor. Remove the cap of the bottle holder from the air compressor.

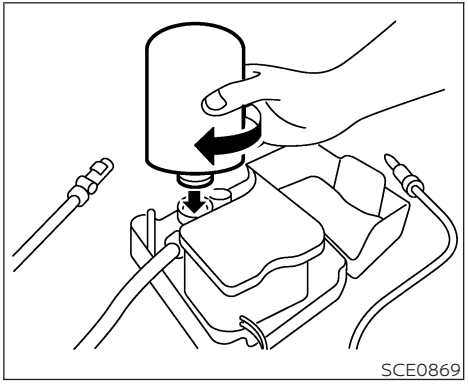

SCE0869

3. Remove the cap from the tire sealant bottle. Leave the bottle seal intact. Screw the bottle clockwise into the bottle holder to pierce the seal of the bottle.
4. Remove the cap from the tire valve on the flat tire.

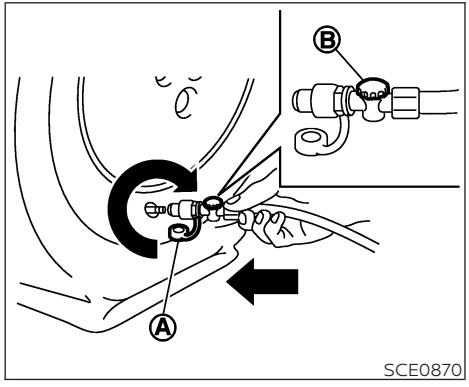

SCE0870

5. Remove the protective cap Ⓐ of the hose and screw the hose securely onto the tire valve. Make sure that the pressure release valve Ⓑ is securely tightened. Make sure that the air compressor switch is in the OFF (O) position, and then insert the power plug into the power outlet in the vehicle.

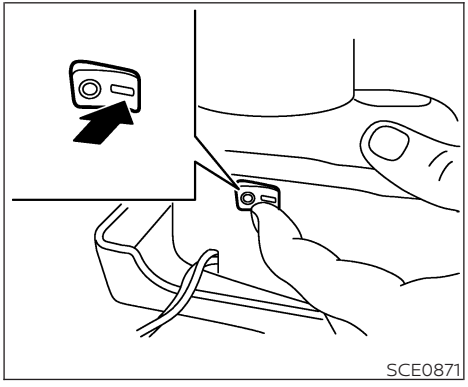
SCE0871

6. Push the power switch to the ACC position. Then turn the compressor switch to the ON (–) position and inflate the tire up to the pressure that is specified on the Tire and Loading Information label affixed to the driver's side center pillar if possible, or to the minimum of 26 psi (180 kPa). Turn the air compressor off briefly in order to check the tire pressure with the pressure gauge.

   If the tire is inflated to higher than the specified pressure, lower the tire pressure by releasing air with the pressure release valve.

NOTE:
The compressor tire pressure gauge may show a pressure reading of 87 psi (600 kPa) for about 30 seconds while inflating the tire. The pressure gauge is indicating the pressure inside the sealant can. When the sealant has been injected into the tire the pressure gauge will drop and indicate actual tire pressure.

⚠WARNING

To avoid serious personal injury while using the emergency tire puncture repair kit:

- **Securely tighten the compressor hose to the tire valve. Failure to do so can cause the sealant to spray into the air and get into your eyes or on the skin.**
- **Do not stand directly beside the damaged tire while it is being inflated because of the risk of the rupture. If there are any cracks or bumps, turn the compressor off immediately.**

If the tire pressure does not increase to **26 psi (180 kPa) within 10 minutes**, the tire may be seriously damaged and **the tire cannot be repaired with this tire repair kit.** It is recommended that you visit a NISSAN dealer.

7. When the tire pressure is at the specified amount, turn the air compressor off. If the tire cannot be inflated to the specified amount, the air compressor can be turned off at the minimum of 26 psi (180 kPa). Remove the power plug from the power outlet and quickly remove the hose from the tire valve. Attach the protective cap and valve cap. Properly stow the emergency tire puncture repair kit in the cargo area.

⚠CAUTION

To avoid serious personal injury when stowing the emergency tire puncture repair kit:

- **Keep the sealant bottle screwed into the compressor. Failure to do so can cause the sealant to spray into the air and get into your eyes or on the skin.**

8. Immediately drive the vehicle for 10 minutes or 2 miles (3 km) at a speed below 50 mph (80 km/h).
9. After driving, make sure that the air compressor switch is in the OFF position, then screw the hose securely onto the tire valve. Check the tire pressure with the pressure gauge. Temporary repair is completed if the tire pressure does not drop.

   Make sure the pressure is adjusted to the pressure that is specified on the Tire and Loading Information label before driving.
10. If the tire pressure drops, repeat the steps from 5 to 9. If the pressure drops again or under 19 psi (130 kPa), **the tire cannot be repaired with this tire repair kit**. If the tire cannot be repaired, the driver should not drive on it any further. The car should be towed to the nearest dealership.

    The sealant bottle and hose cannot be reused to repair another punctured tire. It is recommended that you visit a NISSAN dealer to purchase replacements.

After tire repair

It is recommended that you visit a NISSAN dealer for tire repair/replacement as soon as possible.

⚠WARNING

- **After using Genuine NISSAN Emergency Tire Sealant to repair a minor tire puncture, do not drive the vehicle at speeds faster than 50 mph (80 km/h).**
- **Immediately after using Genuine NISSAN Emergency Tire Sealant to repair a minor tire puncture, it is recommended that you visit a NISSAN dealer. The Genuine NISSAN Emergency Tire Sealant cannot permanently seal a punctured tire. Continuing operation of the vehicle without a permanent tire repair can lead to a crash.**
- **The Genuine NISSAN Emergency Tire Repair Sealant (if so equipped) or equivalent can be used for temporarily repairing a tire. Do not inject any other tire sealant into the tires, as this may cause a malfunction of the tire pressure sensors.**

- **If you used the Genuine NISSAN Emergency Tire Sealant to repair a minor tire puncture, it is recommended that you visit a NISSAN dealer to replace the TPMS sensor in addition to repairing or replacing the tire.**
- **NISSAN recommends using only Genuine NISSAN Emergency Tire Sealant provided with your vehicle. Other tire sealants may damage the valve stem seal which can cause the tire to lose air pressure.**

To start your engine with a booster battery, the instructions and precautions below must be followed.

⚠ WARNING

- **If done incorrectly, jump starting can lead to a battery explosion, resulting in severe injury or death. It could also damage your vehicle.**
- **Explosive hydrogen gas is always present in the vicinity of the battery. Keep all sparks and flames away from the battery.**
- **Do not allow battery fluid to come into contact with eyes, skin, clothing or painted surfaces. Battery fluid is a corrosive sulfuric acid solution which can cause severe burns. If the fluid should come into contact with anything, immediately flush the contacted area with water.**
- **Keep battery out of the reach of children.**
- **The booster battery must be rated at 12 volts. Use of an improperly rated battery can damage your vehicle.**
- **Whenever working on or near a battery, always wear suitable eye protectors (for example, goggles or industrial safety spectacles) and remove rings, metal bands, or any other jewelry. Do not lean over the battery when jump starting.**
- **Do not attempt to jump start a frozen battery. It could explode and cause serious injury.**
- **Your vehicle has an automatic engine cooling fan. It could come on at any time. Keep hands and other objects away from it.**

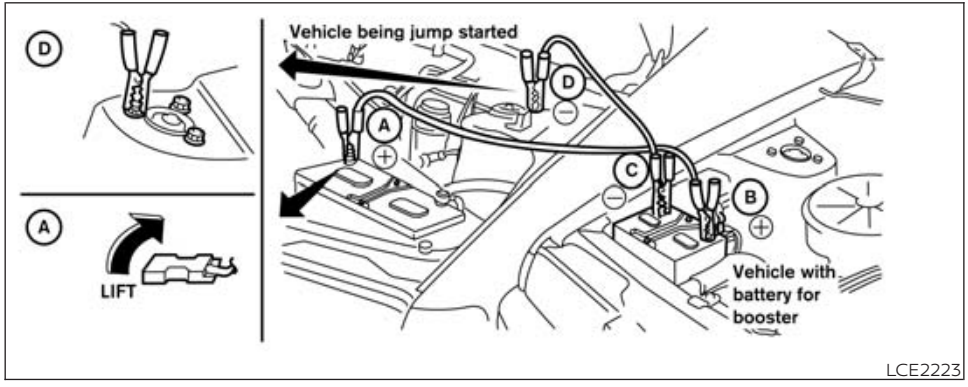

⚠WARNING

Always follow the instructions below. Failure to do so could result in damage to the charging system and cause personal injury.

1. If the booster battery is in another vehicle, position the two vehicles to bring their batteries near each other.

   Do not allow the two vehicles to touch.

2. Apply the parking brake. Press the park button to shift to the P (Park) position. Switch off all unnecessary electrical systems (lights, heater, air conditioner, etc.).
3. Place the ignition switch to the LOCK or OFF position.
4. Connect the jumper cables in the sequence illustrated (Ⓐ, Ⓑ, Ⓒ, Ⓓ).

⚠CAUTION

- **Always connect positive (+) to positive (+) and negative (–) to body ground (for example, strut mounting bolt, engine lift bracket, etc.) — not to the battery.**
- **Make sure the jumper cables do not touch moving parts in the engine compartment and that the cable clamps do not contact any other metal.**

5. Start the engine of the booster vehicle and let it run for a few minutes.
6. Keep the engine speed of the booster vehicle at about 2,000 rpm and start the engine of the vehicle being jump started.

⚠CAUTION

Do not keep the starter motor engaged for more than 10 seconds. If the engine does not start right away, place the ignition switch in the OFF position and wait 3 to 4 seconds before trying again.

7. After starting the engine, carefully disconnect the negative cable and then the positive cable.

PUSH STARTING

⚠ CAUTION

Automatic transmission models cannot be push-started. Attempting to do so may cause transmission damage.

IF YOUR VEHICLE OVERHEATS

⚠ WARNING

- **Do not continue to drive if your vehicle overheats. Doing so could cause engine damage or a vehicle fire.**
- **To avoid the danger of being scalded, never remove the radiator or coolant reservoir cap while the engine is still hot. When the radiator or coolant reservoir cap is removed, pressurized hot water will spurt out, possibly causing serious injury.**
- **Do not open the hood if steam is coming out.**

If your vehicle is overheating (indicated by an extremely high temperature gauge reading), or if you feel a lack of engine power, detect abnormal noise, etc. take the following steps:

1. Move the vehicle safely off the road, apply the parking brake.
2. Press the park button to shift to the P (Park) position.

   Do not stop the engine.
3. Turn off the air conditioner. Open all the windows, move the heater or air conditioner temperature control to maximum hot and fan control to high speed.
4. Get out of the vehicle. Look and listen for steam or coolant escaping from the radiator before opening the hood. If steam or coolant is escaping, turn off the engine. Do not open the hood further until no steam or coolant can be seen.
5. Open the engine hood.

⚠ WARNING

If steam or water is coming from the engine, stand clear to prevent getting burned.

6. Visually check drive belts for damage or looseness. Also check if the cooling fan is running. The radiator hoses and radiator should not leak water. If coolant is leaking, the water pump belt is missing or loose, or the cooling fan does not run, stop the engine.

⚠ WARNING

Be careful not to allow your hands, hair, jewelry or clothing to come into contact with, or get caught in, engine belts or the engine cooling fan. The engine cooling fan can start at any time.

7. After the engine cools down, check the coolant level in the engine coolant reservoir tank with the engine running. Add coolant to the engine coolant reservoir tank if necessary. Have your vehicle repaired. It is recommended that you visit a NISSAN dealer for this service.

BASIC INFORMATION

When towing your vehicle, all jurisdictional and local regulations for towing must be followed. Incorrect towing equipment could damage your vehicle. Towing instructions are available from a NISSAN dealer. Local service operators are generally familiar with the applicable laws and procedures for towing. To assure proper towing and to prevent accidental damage to your vehicle, NISSAN recommends having a service operator tow your vehicle. It is advisable to have the service operator carefully read the following precautions:

WARNING

- **Never ride in a vehicle that is being towed.**
- **Never get under your vehicle after it has been lifted by a tow truck.**

CAUTION

- **When towing, make sure that the transmission, axles, steering system and powertrain are in working condition. If any of these conditions apply, dollies or a flatbed tow truck must be used.**
- **Always attach safety chains before towing.**

For additional information about towing your vehicle behind a Recreational Vehicle (RV), see "Flat towing for all-wheel drive vehicle (if so equipped)" (P. 581) or "Flat towing for front-wheel drive vehicle (if so equipped)" (P. 581).

TOWING RECOMMENDED BY NISSAN

Basic information

NISSAN recommends towing your vehicle based upon the type of drivetrain. For additional information, refer to the diagrams in this section to ensure that your vehicle is properly towed.

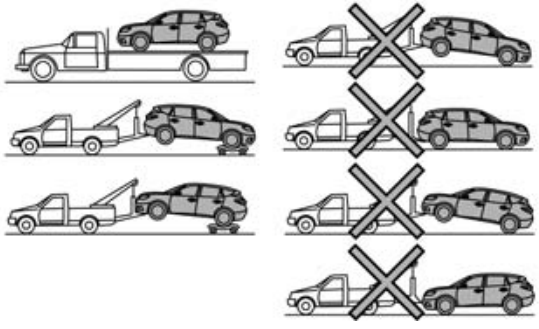

LCE2508

All-Wheel Drive (AWD) models with automatic transmission

NISSAN recommends that towing dollies be used when towing your vehicle or place the vehicle on a flatbed truck as illustrated.

⚠ CAUTION

Never tow All-Wheel Drive (AWD) models equipped with an automatic transmission with any of the wheels on the ground as this may cause serious and expensive damage to the powertrain.

NOTE:

If the battery is completely drained the transmission will not manually shift to other positions.

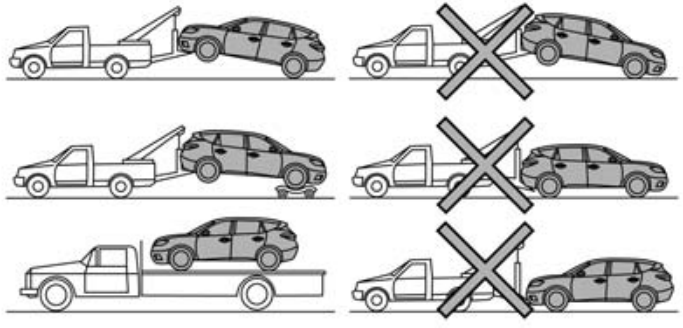

LCE2509

Two-Wheel Drive models with automatic transmission

NISSAN recommends that your vehicle be towed with the driving (front) wheels off the ground or place the vehicle on a flatbed truck as illustrated.

⚠ CAUTION

- **Never tow automatic transmission models with the front wheels on the ground or four wheels on the ground (forward or backward), as this may cause serious and expensive damage to the transmission. If it is necessary to tow the vehicle with the rear wheels raised always use towing dollies under the front wheels.**
- **When towing automatic transmission models with the rear wheels on the ground or on towing dollies:**
  - **Place the ignition switch in the OFF position, and secure the steering wheel in a straight-ahead position with a rope or similar device. Never secure the steering wheel by placing the ignition switch in the LOCK position. This may damage the steering lock mechanism (for models with a steering lock mechanism).**

NOTE:

If the battery is completely drained the transmission will not manually shift to other positions.

VEHICLE RECOVERY (freeing a stuck vehicle)

Basic information

⚠ WARNING

To avoid vehicle damage, serious personal injury or death when recovering a stuck vehicle:

- **Contact a professional towing service to recover the vehicle if you have any questions regarding the recovery procedure.**
- **Tow chains or cables must be attached only to main structural members of the vehicle.**
- **Do not use the vehicle tie-downs to tow or free a stuck vehicle.**
- **Only use devices specifically designed for vehicle recovery and follow the manufacturer's instructions.**
- **Always pull the recovery device straight out from the front of the vehicle. Never pull at an angle.**
- **Route recovery devices so they do not touch any part of the vehicle except the attachment point.**

If your vehicle is stuck in sand, snow, mud, etc., use a tow strap or other device designed specifically for vehicle recovery. Always follow the manufacturer's instructions for the recovery device.

Rocking a stuck vehicle

⚠ WARNING

- **Stand clear of a stuck vehicle.**
- **Do not spin your tires at high speed. This could cause them to explode and result in serious injury. Parts of your vehicle could also overheat and be damaged.**

If your vehicle is stuck in sand, snow, mud, etc., use the following procedure:

1. Turn off the Vehicle Dynamic Control (VDC) system.
2. Make sure the area in front and behind the vehicle is clear of obstructions.
3. Turn the steering wheel right and left to clear an area around the front tires.
4. Slowly rock the vehicle forward and backward.
   - Shift back and forth between R (Reverse) and D (Drive).
   - Apply the accelerator as little as possible to maintain the rocking motion.
   - Release the accelerator pedal before shifting between R (Reverse) and D (Drive).
   - Do not spin the tires above 35 mph (55 km/h).
5. If the vehicle cannot be freed after a few tries, contact a professional towing service to remove the vehicle.

7 Appearance and care

Cleaning exterior 478
Basic information 478
Washing 478
Waxing 479
Removing spots 479
Underbody 479
Glass 479
Aluminum alloy wheels 479
Chrome parts 480
Tire dressings 480
Cleaning interior 480
Basic information 480
Air fresheners 481
Power moonroof (if so equipped) 481
Floor mats (if so equipped) 482
Seat belts 483
Cleaning the seat tracks 483
Corrosion protection 483
Most common factors contributing to vehicle corrosion 483
Environmental factors influence the rate of corrosion 483
Protect your vehicle from corrosion 484

BASIC INFORMATION

In order to maintain the appearance of your vehicle, it is important to take proper care of it.

To protect the paint surfaces, wash your vehicle as soon as you can:

- After a rainfall to prevent possible damage from acid rain.
- After driving on coastal roads.
- When contaminants such as soot, bird droppings, tree sap, metal particles or bugs get on the paint surface.
- When dust or mud builds up on the surface.

Whenever possible, store or park your vehicle inside a garage or in a covered area.

When it is necessary to park outside, park in a shady area or protect the vehicle with a body cover.

Be careful not to scratch the paint surface when putting on or removing the body cover.

WASHING

Wash dirt off with a wet sponge and plenty of water. Clean the vehicle thoroughly using a mild soap, a special vehicle soap or general purpose dishwashing liquid mixed with clean, lukewarm (never hot) water.

⚠ CAUTION

- **Do not concentrate water spray directly on the sonar sensors (if so equipped) on the bumper as this will result in damage to the sensors. Do not use pressure washers capable of spraying water over 1,200 psi (8,274 kPa) to wash your vehicle. Use of high-pressure washers over 1,200 psi (8,274 kPa) can result in damage to or removal of paint or graphics. Avoid using a high-pressure washer closer than 12 inches (30 cm) to the vehicle. Always use a wide-angle nozzle only, keep the nozzle moving and do not concentrate the water spray on any one area.**
- **Do not use car washes that use acid in the detergent. Some car washes, especially brushless ones, use some acid for cleaning. The acid may react with some plastic vehicle components, causing them to crack. This could affect their appearance, and also could cause them not to function properly. Always check with your car wash to confirm that acid is not used.**
- **Do not wash the vehicle with strong household soap, strong chemical detergents, gasoline or solvents.**
- **Do not wash the vehicle in direct sunlight or while the vehicle body is hot, as the surface may become water-spotted.**
- **Avoid using tight-napped or rough cloths, such as washing mitts. Care must be taken when removing caked-on dirt or other foreign substances so the paint surface is not scratched or damaged.**

Rinse the vehicle thoroughly with plenty of clean water.

Inside edges, seams and folds on the doors, hatches and hood are particularly vulnerable to the effects of road salt. Therefore, these areas must be cleaned regularly. Take care that the drain holes in the lower edge of the door are open. Spray water under the body and in the wheel wells to loosen the dirt and wash away road salt.

A damp chamois can be used to dry the vehicle to avoid water spots.

WAXING

Regular waxing protects the paint surface and helps retain new vehicle appearance. Polishing is recommended to remove built-up wax residue and to avoid a weathered appearance before re-applying wax.

A NISSAN dealer can assist you in choosing the proper product.

- Wax your vehicle only after a thorough washing. Follow the instructions supplied with the wax.
- Do not use a wax containing any abrasives, cutting compounds or cleaners that may damage the vehicle finish.

Machine compounding or aggressive polishing on a base coat/clear coat paint finish may dull the finish or leave swirl marks.

REMOVING SPOTS

Remove tar and oil spots, industrial dust, insects, and tree sap as quickly as possible from the exterior surface of the vehicle to avoid lasting damage or staining.

You may notice contamination on the exterior surface of the vehicle throughout the life of your vehicle, which can appear as orange or brown rust. These spots may be caused by iron-containing debris picked up by your vehicle as you drive.

Special cleaning products are available at a NISSAN dealer or any automotive accessory store. It is recommended that you visit a NISSAN dealer for these products.

UNDERBODY

In areas where road salt is used in winter, it is necessary to clean the underbody regularly in order to prevent dirt and salt from building up and causing the acceleration of corrosion on the underbody and suspension. Before the winter period and again in the spring, the underseal must be checked and, if necessary, re-treated.

GLASS

Use glass cleaner to remove smoke and dust film from the glass surfaces. It is normal for glass to become coated with a film after the vehicle is parked in the hot sun. Glass cleaner and a soft cloth will easily remove this film.

⚠ CAUTION

When cleaning the inside of the windows, do not use sharp-edged tools, abrasive cleaners or chlorine-based disinfectant cleaners. They could damage the electrical conductors, radio antenna elements or rear window defroster elements.

ALUMINUM ALLOY WHEELS

Wash the wheels regularly with a sponge dampened in a mild soap solution, especially during winter months in areas where road salt is used. If not removed, road salt can discolor the wheels.

⚠ CAUTION

Follow the directions below to avoid staining or discoloring the wheels:

- **Do not use a cleaner that uses strong acid or alkali contents to clean the wheels.**
- **Do not apply wheel cleaners to the wheels when they are hot. The wheel temperature should be the same as ambient temperature.**
- **Rinse the wheel to completely remove the cleaner within 15 minutes after the cleaner is applied.**

CHROME PARTS

Clean all chrome parts regularly with a non-abrasive chrome polish to maintain the finish.

⚠ CAUTION

Follow the directions below to avoid staining or discoloring the chrome parts:

- **Do not use a cleaner that uses strong acid or alkali contents to clean the chrome parts.**

TIRE DRESSINGS

NISSAN does not recommend the use of tire dressings. Tire manufacturers apply a coating to the tires to help reduce discoloration of the rubber. If a tire dressing is applied to the tires, it may react with the coating and form a compound. This compound may come off the tire while driving and stain the vehicle paint.

If you choose to use a tire dressing, take the following precautions:

- Use a water-based tire dressing. The coating on the tire dissolves more easily than with an oil-based tire dressing.
- Apply a light coat of tire dressing to help prevent it from entering the tire tread/grooves (where it would be difficult to remove).
- Wipe off excess tire dressing using a dry towel. Make sure the tire dressing is completely removed from the tire tread/grooves.
- Allow the tire dressing to dry as recommended by the tire dressing manufacturer.

BASIC INFORMATION

Occasionally remove loose dust from the interior trim, plastic parts and seats using a vacuum cleaner or soft bristled brush. Wipe the vinyl and leather (if so equipped) surfaces with a clean, soft cloth dampened in mild soap solution, then wipe clean with a dry, soft cloth.

Regular care and cleaning is required in order to maintain the appearance of the leather (if so equipped).

Before using any fabric protector, read the manufacturer's recommendations. Some fabric protectors contain chemicals that may stain or bleach the seat material.

Use a cloth dampened only with water to clean the meter and gauge lens.

⚠ WARNING

- **Do not use wax or silicone based products in the interior of the vehicle. Doing so may cause damage to interior parts, electrical devices, or electronics.**

- **Do not use water or acidic cleaners (hot steam cleaners) on the seat. This can damage the seat or occupant classification sensor. This can also affect the operation of the air bag system and result in serious personal injury.**

⚠ CAUTION

- **Never use benzine, thinner or any similar material.**
- **Small dirt particles can be abrasive and damaging to leather surfaces and should be removed promptly. Do not use saddle soap, car waxes, polishes, oils, cleaning fluids, solvents, detergents or ammonia-based cleaners as they may damage the leather's natural finish.**
- **Never use fabric protectors unless recommended by the manufacturer.**
- **Do not use glass or plastic cleaner on meter or gauge lens covers. It may damage the lens cover.**
- **Never use chloride solutions for cleaning aluminum decoratives (if so equipped), damage may occur.**

AIR FRESHENERS

Most air fresheners use a solvent that could affect the vehicle interior. If you use an air freshener, take the following precautions:

- Hanging-type air fresheners can cause permanent discoloration when they contact vehicle interior surfaces. Place the air freshener in a location that allows it to hang free and not contact an interior surface.
- Liquid-type air fresheners typically clip on the vents. These products can cause immediate damage and discoloration when spilled on interior surfaces.

Carefully read and follow the manufacturer's instructions before using the air fresheners.

POWER MOONROOF (if so equipped)

The sunshade is made from a tricot material.

⚠ CAUTION

To help prevent damaging the moonroof while cleaning:

- **Do not rub the material with a cloth. Doing so can damage the surface of the material or cause a stain to spread.**
- **Never use benzine, thinner or any similar chemical to clean the sunshade. This may discolor the moonroof and damage the surface.**
- **Clean water based stains by patting the surface with a clean soft cloth dampened in warm water. Press a clean dry cloth onto the surface to remove as much dampness as possible and then let air dry.**
- **Clean oil based stains by patting the surface with a clean soft cloth dampened in warm water. Press a clean dry cloth onto the surface to remove as much dampness as possible and then let air dry.**

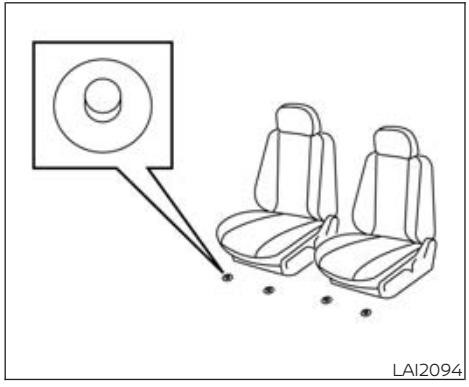

FLOOR MATS (if so equipped)

Basic information

⚠ WARNING

To avoid potential pedal interference that may result in a collision, injury or death:

- **NEVER place a floor mat on top of another floor mat in the driver front position or install them upside down or backwards.**
- **Use only Genuine NISSAN floor mats, or equivalent floor mats, that are specifically designed for use in your vehicle model and model year.**
- **Properly position the mats in the floorwell using the floor mat positioning hook. For additional information, see "Floor mat installation" (P. 482).**
- **Make sure the floor mat does not interfere with pedal operation.**
- **Periodically check the floor mats to make sure they are properly installed.**
- **After cleaning the vehicle interior, check the floor mats to make sure they are properly installed.**

The use of Genuine NISSAN floor mats can extend the life of your vehicle carpet and make it easier to clean the interior. Mats should be maintained with regular cleaning and replaced if they become excessively worn.

Floor mat installation

Your vehicle is equipped with floor mat positioning hook(s). The number and shape of the floor mat positioning hooks for each seating position varies depending on the vehicle.

When installing Genuine NISSAN floor mats, follow the installation instructions provided with the mat and the following:

1. With the ignition switch in the OFF position, the shift position in P (Park) position and with the parking brake fully applied, position the floor mat in the floorwell so that the floor mat grommet holes are aligned with the hook(s).
2. Secure the grommet holes into the hook(s) and ensure that the floor mat is properly positioned.
3. Make sure the floor mat does not interfere with pedal operation. With the ignition switch still in the OFF position, the shift position in the P (Park) position and with the parking brake applied, fully apply and release all pedals. The floor mat must not interfere with pedal operation or prevent the pedal from returning to its normal position.

It is recommended that you visit a NISSAN dealer for details about installing the floor mats in your vehicle.

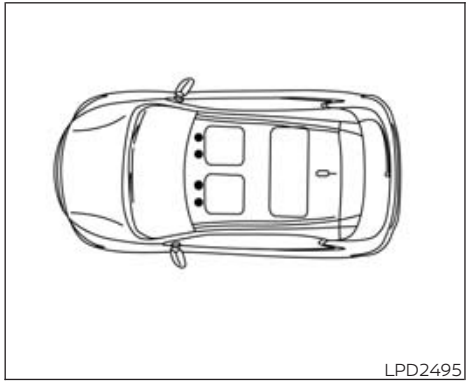

Positioning hooks

The illustration shows the location of the floor mat positioning hooks.

SEAT BELTS

The seat belts can be cleaned by wiping them with a sponge dampened in a mild soap solution. Allow the belts to dry completely in the shade before using them. For additional information, see "Seat belt maintenance" (P. 29).

WARNING

Do not allow wet seat belts to roll up in the retractor. NEVER use bleach, dye or chemical solvents to clean the seat belts, since these materials may severely weaken the seat belt webbing.

CLEANING THE SEAT TRACKS

CAUTION

Periodically clean the seat tracks to prevent reduction of ability to move the seats.

Clean periodically with a high-powered vacuum cleaner. Dirt and debris may reduce the ability to adjust the seat. A wet cleansing agent may be used if necessary.

MOST COMMON FACTORS CONTRIBUTING TO VEHICLE CORROSION

Most vehicle corrosion is caused by:

- The accumulation of moisture-retaining dirt and debris in body panel sections, cavities, and other areas.
- Damage to paint and other protective coatings caused by gravel and stone chips or minor traffic collisions.

ENVIRONMENTAL FACTORS INFLUENCE THE RATE OF CORROSION

Moisture

Accumulation of sand, dirt and water on the vehicle body underside can accelerate corrosion. Wet floor coverings will not dry completely inside the vehicle and should be removed for drying to avoid floor panel corrosion.

Relative humidity

Corrosion will be accelerated in areas of high relative humidity, especially those areas where the temperatures stay above freezing and where atmospheric pollution exists and road salt is used.

Temperature

High temperatures accelerate the rate of corrosion to those parts which are not well ventilated.

Air pollution

Industrial pollution, the presence of salt in the air in coastal areas, or heavy road salt use accelerates the corrosion process. Road salt also accelerates the disintegration of paint surfaces.

PROTECT YOUR VEHICLE FROM CORROSION

- Wash and wax your vehicle often to keep the vehicle clean.
- Always check for minor damage to the paint and repair it as soon as possible.
- Keep drain holes at the bottom of the doors open to avoid water accumulation.
- Check the underbody for accumulation of sand, dirt or salt. If present, wash with water as soon as possible.

⚠ CAUTION

- **NEVER remove dirt, sand or other debris from the passenger compartment by washing it out with a hose. Remove dirt with a vacuum cleaner or broom.**
- **Never allow water or other liquids to come in contact with electronic components inside the vehicle as this may damage them.**

Chemicals used for road surface de-icing are extremely corrosive. They accelerate corrosion and deterioration of underbody components such as the exhaust system, fuel and brake lines, brake cables, floor pan and fenders.

In winter, the underbody must be cleaned periodically.

For additional protection against rust and corrosion, which may be required in some areas, it is recommended that you visit a NISSAN dealer.

8 Do-it-yourself

Maintenance precautions 486
Engine compartment check locations 487
Engine cooling system 488
Basic information 488
Checking engine coolant level 489
Changing engine coolant 489
Engine oil 490
Checking engine oil level 490
Changing engine oil and oil filter 491
Automatic Transmission Fluid (ATF) 494
Brake fluid 494
Windshield-washer fluid 495
Windshield-washer fluid reservoir 495
Battery 496
Basic information 496
Jump starting 498
Variable voltage control system 498
Drive belt 499
Spark plugs 499
Replacing spark plugs 499
Air cleaner 500
Basic information 500
In-cabin microfilter (if so equipped) 501
Windshield wiper blades 501
Cleaning 501
Replacing 501
Brakes 503
Basic information 503
Self-adjusting brakes 503
Brake pad wear indicators 503
Fuses 504
Basic information 504
Engine compartment 504
Passenger compartment 505
Intelligent Key battery replacement 508
Basic information 508
NISSAN Intelligent Key® 508
Lights 510
Basic information 510
Headlights 510
Exterior and interior lights 511
Wheels and tires 511
Basic information 511
Tire pressure 511
Tire labeling 515
Types of tires 519
Tire chains 520
Changing wheels and tires 521

MAINTENANCE PRECAUTIONS

When performing any inspection or maintenance work on your vehicle, always take care to prevent serious accidental injury to yourself or damage to the vehicle. The following are general precautions which should be closely observed.

⚠ WARNING

- **Park the vehicle on a level surface, apply the parking brake securely and block the wheels to prevent the vehicle from moving. Press the park button to engage the P (Park) position.**
- **Be sure the ignition switch is in the OFF or LOCK position when performing any parts replacement or repairs.**
- **If you must work with the engine running, keep your hands, clothing, hair and tools away from moving fans, belts and any other moving parts.**
- **It is advisable to secure or remove any loose clothing and remove any jewelry, such as rings, watches, etc. before working on your vehicle.**
- **Always wear eye protection whenever you work on your vehicle.**
- **Your vehicle is equipped with an automatic engine cooling fan. It may come on at any time without warning, even if the ignition switch is in the OFF position and the engine is not running. To avoid injury, always disconnect the negative battery cable before working near the fan.**
- **If you must run the engine in an enclosed space such as a garage, be sure there is proper ventilation for exhaust gases to escape.**
- **Never get under the vehicle while it is supported only by a jack. If it is necessary to work under the vehicle, support it with safety stands.**
- **Keep smoking materials, flame and sparks away from the fuel tank and battery.**
- **Because the fuel lines on gasoline engine models are under high pressure even when the engine is off, it is recommended that you visit a NISSAN dealer for service of the fuel filter or fuel lines.**

⚠ CAUTION

- **Do not work under the hood while the engine is hot. Turn the engine off and wait until it cools down.**
- **Avoid contact with used engine oil and coolant. Improperly disposed engine oil, engine coolant and/or other vehicle fluids can damage the environment. Always conform to local regulations for disposal of vehicle fluid.**
- **Never leave the engine or automatic transmission related component harnesses disconnected while the ignition switch is in the ON position.**
- **Never connect or disconnect the battery or any transistorized component while the ignition switch is in the ON position.**

NOTE:

If the battery is completely drained the transmission will not manually shift to other positions.

This "Do-it-yourself" section gives instructions regarding only those items which are relatively easy for an owner to perform.

ENGINE COMPARTMENT CHECK LOCATIONS

A Genuine NISSAN service manual is also available. For additional information, see "Owner's Manual/Service Manual order information" (P. 587).

You should be aware that incomplete or improper servicing may result in operating difficulties or excessive emissions, and could affect warranty coverage. **If in doubt about any servicing, it is recommended that you have it done by a NISSAN dealer.**

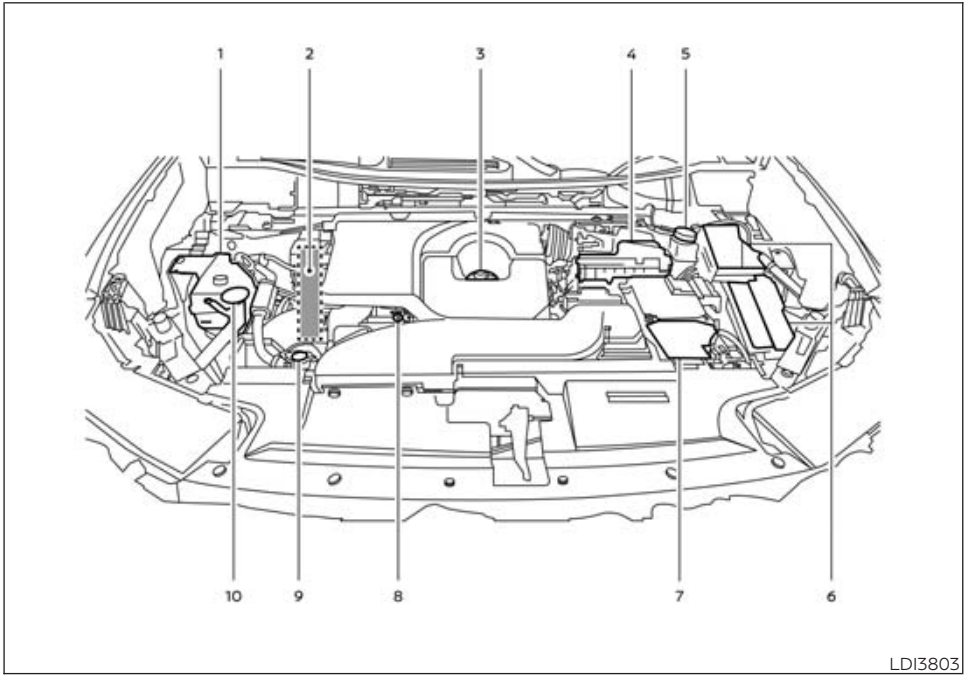

2.0L 4 cylinder (KR20DDET engine model)

1. Engine coolant reservoir
2. Drive belt location
3. Engine oil filler cap
4. Air cleaner
5. Brake fluid reservoir

6. Fuse/Fusible link box
7. Battery
8. Engine oil dipstick
9. Radiator cap
10. Windshield-washer fluid reservoir

NOTE:

Your vehicle may not be equipped with an engine cover.

BASIC INFORMATION

The engine cooling system is filled at the factory with a pre-diluted mixture of 50% Genuine NISSAN Long Life Antifreeze/Coolant (blue) and 50% water to provide year-round antifreeze and coolant protection. The antifreeze solution contains rust and corrosion inhibitors. Additional engine cooling system additives are not necessary.

⚠WARNING

- **Never remove the radiator or coolant reservoir cap when the engine is hot. Wait until the engine and radiator cool down. Serious burns could be caused by high pressure fluid escaping from the radiator. For additional information, see "If your vehicle overheats" (P. 472).**
- **The radiator is equipped with a pressure type radiator cap. To prevent engine damage, use only a Genuine NISSAN radiator cap.**

⚠CAUTION

- **Never use any cooling system additives such as radiator sealer. Additives may clog the cooling system and cause damage to the engine, transmission and/or cooling system.**
- **When adding or replacing coolant, be sure to use only Genuine NISSAN Long Life Antifreeze/Coolant (blue) or equivalent. Genuine NISSAN Long Life Antifreeze/Coolant (blue) is pre-diluted to provide antifreeze protection to -34° F (-37° C). If additional freeze protection is needed due to weather where you operate your vehicle, add Genuine NISSAN Long Life Antifreeze/Coolant (blue) concentrate following the directions on the container. If an equivalent coolant other than Genuine NISSAN Long Life Antifreeze/Coolant (blue) is used, follow the coolant manufacturer's instructions to maintain minimum antifreeze protection to -34° F (-37° C). The use of other types of coolant solutions other than Genuine NISSAN Long Life Antifreeze/Coolant (blue) or equivalent may damage the engine cooling system.**

- **The life expectancy of the factory-fill coolant is 105,000 miles (168,000 km) or 7 years. Mixing any other type of coolant other than Genuine NISSAN Long Life Antifreeze/Coolant (blue) (or equivalent coolant), including Genuine NISSAN Long Life Antifreeze/Coolant (green), or the use of non-distilled water may reduce the life expectancy of the factory-fill coolant. For additional information, see the "Maintenance and schedules" section of this manual.**

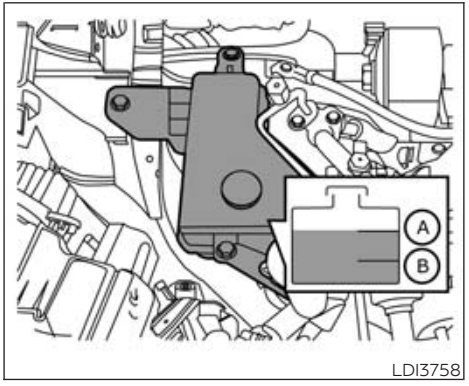

LDI3758

CHECKING ENGINE COOLANT LEVEL

Check the coolant level **in the reservoir when the engine is cold.** If the coolant level is below the MIN level Ⓑ, add coolant to the MAX level Ⓐ. If the reservoir is empty, check the coolant level in the radiator **when the engine is cold.** If there is insufficient coolant in the radiator, fill the radiator with coolant up to the filler opening and also add it to the reservoir up to the MAX level Ⓐ.

This vehicle contains Genuine NISSAN Long Life Antifreeze/Coolant (blue). The life expectancy of the factory-fill coolant is 105,000 miles (168,000 km) or 7 years. Mixing any other type of coolant or the use of non-distilled water will reduce the life expectancy of the factory-fill coolant. For additional information, see the "Maintenance and schedules" section of this manual.

If the cooling system frequently requires coolant, have it checked. It is recommended that you visit a NISSAN dealer for this service.

For additional information on the location of the engine coolant reservoir, see "Engine compartment check locations" (P. 487).

CHANGING ENGINE COOLANT

A NISSAN dealer can change the engine coolant. The service procedure can be found in the NISSAN Service Manual.

Improper servicing can result in reduced heater performance and engine overheating.

⚠ WARNING

- **To avoid the danger of being scalded, never change the coolant when the engine is hot.**
- **Never remove the radiator or engine coolant reservoir cap when the engine is hot. Serious burns could be caused by high pressure fluid escaping from the radiator.**
- **Avoid direct skin contact with used coolant. If skin contact is made, wash thoroughly with soap or hand cleaner as soon as possible.**
- **Keep coolant out of the reach of children and pets.**

Engine coolant must be disposed of properly. Check your local regulations.

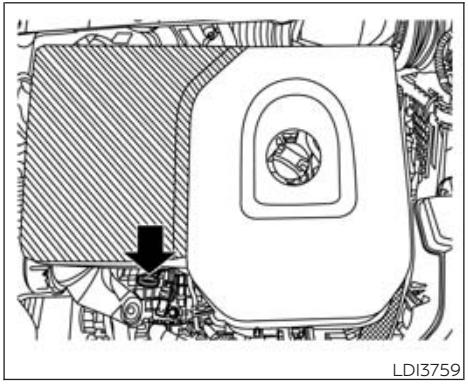

LDI3759

CHECKING ENGINE OIL LEVEL

1. Park the vehicle on a level surface and apply the parking brake.
2. Start the engine and let it idle until it reaches operating temperature.
3. Turn off the engine. **Wait more than 10 minutes for the oil to drain back into the oil pan.**
4. Remove the dipstick and wipe it clean. Reinsert it all the way.

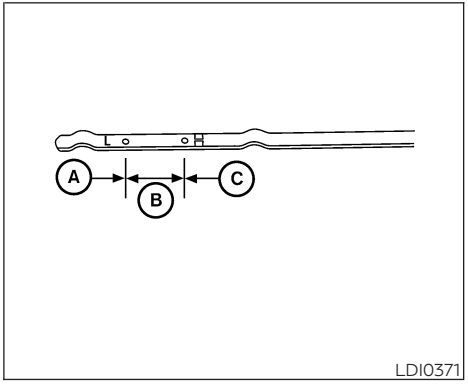

LDI0371

5. Remove the dipstick again and check the oil level. It should be between the H (High) and L (Low) marks Ⓑ. This is the normal operating oil level range. If the oil level is below the L (Low) mark Ⓐ, remove the oil filler cap and pour recommended oil through the opening. **Do not overfill Ⓒ.**
6. Recheck oil level with the dipstick.

It is normal to add some oil between oil maintenance intervals or during the break-in period, depending on the severity of operating conditions.

⚠ CAUTION

Oil level should be checked regularly. Operating the engine with an insufficient amount of oil can damage the engine, and such damage is not covered by warranty.

CHANGING ENGINE OIL AND OIL FILTER

Basic information

For additional information on engine oil and oil filter change, refer to the instructions outlined in this section.

Vehicle set-up

1. Park the vehicle on a level surface and apply the parking brake.
2. Run the engine until it reaches operating temperature.
3. Turn the engine off and wait for 15 minutes.
4. Raise and support the vehicle using a suitable floor jack and safety jack stands.
   - Place the safety jack stands under the vehicle jack-up points.
   - A suitable adapter should be attached to the jack stand saddle.

⚠ CAUTION

Make sure the correct lifting and support points are used to avoid vehicle damage.

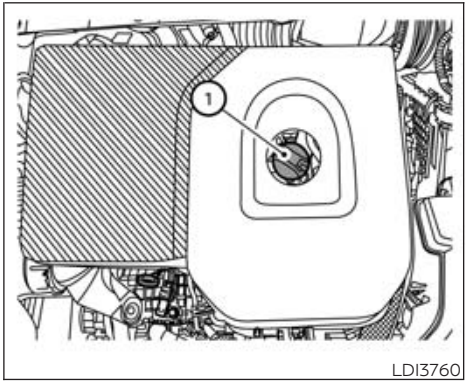

① **Oil filler cap**

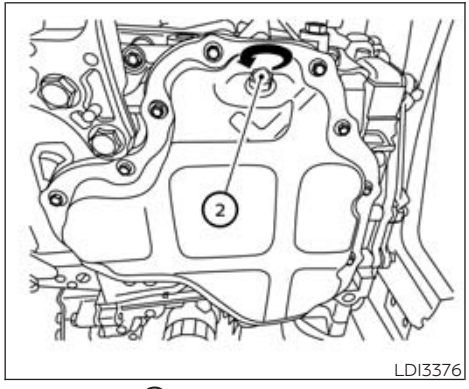

② **Oil drain plug**

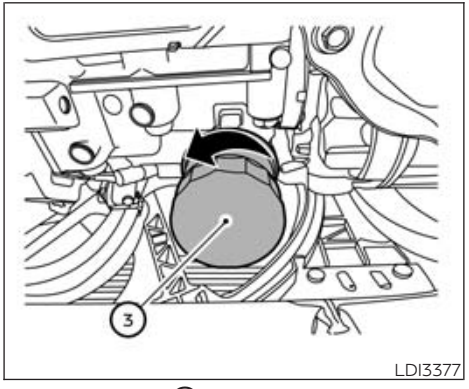

③ **Oil filter**

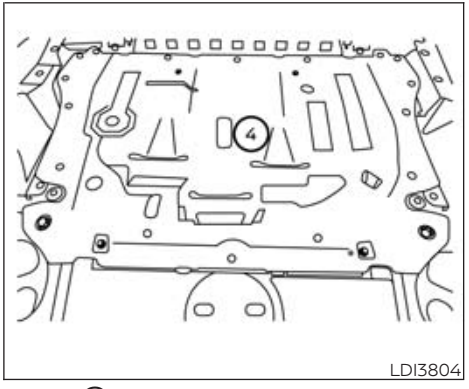

④ **Under engine protector**

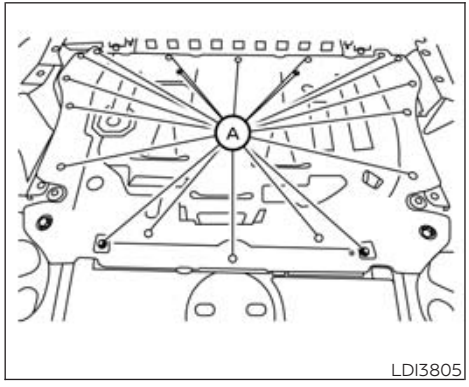

Under-engine protector

Removal of engine protectors

1. Remove fasteners Ⓐ and under engine protector.

Engine oil and filter

1. Place a large drain pan under the drain plug and oil filter.
2. Remove the oil filler cap.
3. Remove the drain plug with a wrench by turning it counterclockwise and completely drain the oil.

⚠CAUTION

Be careful not to burn yourself, as the engine oil is hot.

⚠WARNING

- **Prolonged and repeated contact with used engine oil may cause skin cancer.**
- **Try to avoid direct skin contact with used oil. If skin contact is made, wash thoroughly with soap or hand cleaner as soon as possible.**
- **Keep used engine oil out of reach of children.**

4. Loosen the oil filter with an oil filter wrench by turning it counterclockwise. Remove the oil filter by turning it by hand.
5. Wipe the engine oil filter mounting surface with a clean rag.

⚠CAUTION

Be sure to remove any old gasket material remaining on the sealing surface of the engine. Failure to do so could lead to an oil leak and engine damage.

- **The dipstick must be inserted in place to prevent oil spillage from the dipstick hole when filling the engine with oil.**

6. Coat the gasket on the new filter with clean engine oil.
7. Screw in the oil filter clockwise until a slight resistance is felt, then tighten additionally more than 2/3 turn.

   Oil filter tightening torque:
   11 to 15 ft-lb (14.7 to 20.6 N·m)

8. Clean and re-install the drain plug with a new washer. Securely tighten the drain plug with a wrench. Do not use excessive force.

   Drain plug tightening torque:
   22 to 29 ft-lb (29.4 to 39.2 N·m)

9. Refill the engine with the recommended oil through the oil filler opening, and install the oil filler cap securely.

For additional information about drain and refill capacity, see "Recommended fluids/lubricants and capacities" (P. 557). The drain and refill capacity depends on the oil temperature and drain time. Use these specifications for reference only. Always use the dipstick to determine the proper amount of oil in the engine.

10. Start the engine and check for leakage around the drain plug and the oil filter. Correct as required. Turn the engine off and wait more than 15 minutes. Check the oil level with the dipstick. Add engine oil if necessary.

After the operation

1. Reinstall engine protectors in reverse order of removal.
2. Lower the vehicle carefully to the ground.
3. Reset the oil control system. For additional information, see "Vehicle information display" (P. 97).

- Dispose of waste oil and filter properly.
- Check your local regulations.

AUTOMATIC TRANSMISSION FLUID (ATF)

When checking or replacement is required, it is recommended that you visit a NISSAN dealer for this service.

⚠ CAUTION

- **NISSAN recommends using Genuine NISSAN Matic R ATF. Do not mix with other fluids.**
- **Do not use CVT fluid or manual transmission fluid in this transmission. Damage caused by the use of fluids other than as recommended is not covered under NISSAN's New Vehicle Limited Warranty outlined in your Warranty Information Booklet.**
- **Using fluids that are not equivalent to Genuine NISSAN Matic R ATF may also damage the transmission. Damage caused by the use of fluids other than as recommended is not covered under NISSAN's New Vehicle Limited Warranty outlined in your Warranty Information Booklet.**

The specified automatic transmission fluid is also described on caution labels located in the engine compartment.

BRAKE FLUID

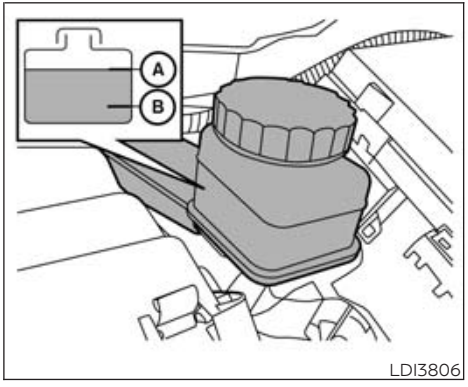

LDI3806

⚠ WARNING

- **Use only new fluid from a sealed container. Old, inferior or contaminated fluid may damage the brake system. The use of improper fluids can damage the brake system and affect the vehicle's stopping ability.**
- **Clean the filler cap before removing.**
- **Brake fluid is poisonous and should be stored carefully in marked containers out of reach of children.**

⚠CAUTION

Do not spill the fluid on any painted surfaces. This will damage the paint. If fluid is spilled, immediately wash the surface with water.

Check the fluid level in the reservoir. If the brake fluid is below the MIN line Ⓑ, the brake warning light will illuminate. Add brake fluid up to the MAX line Ⓐ. For additional information on brake fluid type, see "Recommended fluids/lubricants and capacities" (P. 557).

If the brake fluid must be added frequently, the brake system should be thoroughly checked. It is recommended that you visit a NISSAN dealer for this service.

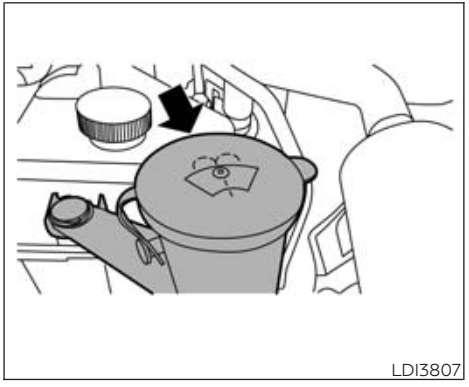

WINDSHIELD-WASHER FLUID RESERVOIR

Fill the windshield-washer fluid reservoir periodically. Add windshield-washer fluid when the "Low Washer Fluid" warning message shows on the vehicle information display.

To fill the windshield-washer fluid reservoir, lift the cap off the reservoir and pour the windshield-washer fluid into the reservoir opening.

Add a washer solvent to the washer for better cleaning. In the winter season, add a windshield-washer antifreeze. Follow the manufacturer's instructions for the mixture ratio.

Refill the reservoir more frequently when driving conditions require an increased amount of windshield-washer fluid.

Recommended fluid is Genuine NISSAN Windshield Washer Concentrate Cleaner & Antifreeze or equivalent.

⚠CAUTION

- **Do not substitute engine antifreeze coolant for windshield-washer fluid. This may result in damage to the paint.**
- **Do not fill the windshield-washer fluid reservoir with washer fluid concentrates at full strength. Some methyl alcohol based washer fluid concentrates may permanently stain the grille if spilled while filling the windshield-washer fluid reservoir.**

- **Pre-mix washer fluid concentrates with water to the manufacturer's recommended levels before pouring the fluid into the windshield-washer fluid reservoir. Do not use the windshield-washer fluid reservoir to mix the washer fluid concentrate and water.**

BASIC INFORMATION

- No smoking, No exposed flames, No Sparks

WARNING

Do not expose the battery to electrical sparks, flames or smoking. Hydrogen gas generated by the battery is explosive. Explosive gases can cause blindness or injury.

- Shield eyes

WARNING

Handle the battery cautiously. Always wear eye protection glasses to protect against explosion or battery acid.

- Keep away from children

WARNING

Never allow children to handle the battery. Keep the battery out of the reach of children.

- Battery acid

WARNING

Do not allow battery fluid to contact your skin, eyes, fabrics, or painted surfaces. Sulfuric acid can cause blindness or severe burns. After touching a battery or battery cap, do not touch or rub your eyes. Thoroughly wash your hands. If the acid contacts your eyes, skin or clothing, immediately flush with water for at least 15 minutes and seek medical attention. Battery fluid is acid. If the battery fluid gets into your eyes or onto your skin, it could cause loss of your eyesight or burns.

- Note operating instructions

WARNING

Before handling the battery, read this instruction carefully to ensure correct and safe handling.

- Explosive gas

WARNING

Hydrogen gas generated by battery fluid is explosive. Explosive gases can cause blindness or injury.

- Keep the battery surface clean and dry. Clean the battery with a solution of baking soda and water.
- Make certain the terminal connections are clean and securely tightened.
- If the vehicle is not to be used for 30 days or longer, disconnect the negative (-) battery terminal cable to prevent discharge.

NOTE:

Care should be taken to avoid situations that can lead to potential battery discharge and potential no-start conditions such as:

1. **Installation or extended use of electronic accessories that consume battery power when the engine is not running (Phone chargers, GPS, DVD players, etc.)**
2. **Vehicle is not driven regularly and/or only driven short distances.**

In these cases, the battery may need to be charged to maintain battery health.

The vehicle is equipped with a battery cover which protects the battery from engine heat and from damage during a collision. When replacing the battery, the cover must be reinstalled. For additional information, see "Engine compartment check locations" (P. 487).

WARNING

- **Do not expose the battery to flames, an electrical spark or a cigarette. Hydrogen gas generated by the battery is explosive. Explosive gases can cause blindness or injury. Do not allow battery fluid to contact your skin, eyes, fabrics or painted surfaces. Sulfuric acid can cause blindness or injury. After touching a battery or battery cap, do not touch or rub your eyes. Thoroughly wash your hands. If the acid contacts your eyes, skin or clothing, immediately flush with water for at least 15 minutes and seek medical attention.**
- **When working on or near a battery, always wear suitable eye protection and remove all jewelry.**
- **Battery posts, terminals and related accessories contain lead and lead compounds. Wash hands after handling.**
- **Keep battery out of the reach of children.**
- **Do not tip the battery.**

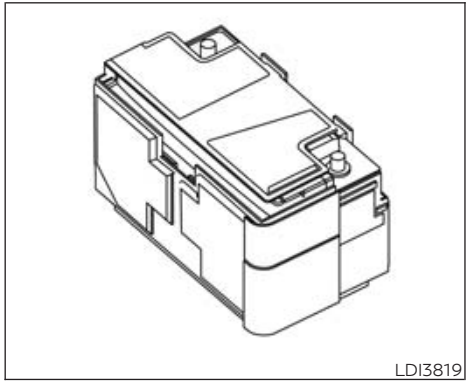

NOTE:

Do not try to open the top of the battery.

This battery is not equipped with removable vent caps.

JUMP STARTING

If jump starting is necessary, see "Jump starting" (P. 470). If the engine does not start by jump starting, the battery may have to be replaced. It is recommended that you visit a NISSAN dealer for this service.

VARIABLE VOLTAGE CONTROL SYSTEM

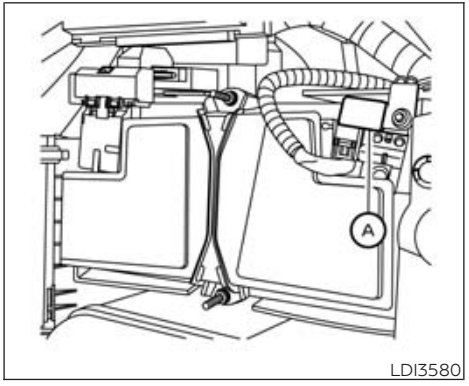

⚠ CAUTION

- **Do not ground accessories directly to the battery terminal. Doing so will bypass the variable voltage control system and the vehicle battery may not charge completely.**
- **Use electrical accessories with the engine running to avoid discharging the vehicle battery.**

NOTE:

If the battery is completely drained the transmission will not manually shift to other positions.

Your vehicle is equipped with a variable voltage control system. This system measures the amount of electrical discharge from the battery and controls voltage generated by the generator.

The current sensor Ⓐ is located near the battery along the negative battery cable. If you add electrical accessories to your vehicle, be sure to ground them to a suitable body ground such as the frame or engine block area.

DRIVE BELT

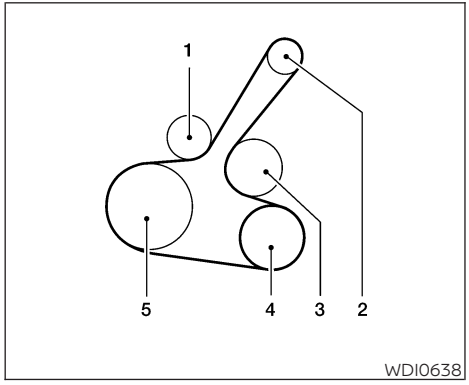

1. Drive belt automatic tensioner pulley
2. Generator pulley
3. Water pump pulley
4. Air conditioner compressor pulley
5. Crankshaft pulley

⚠ WARNING

Be sure the ignition switch is in the OFF or LOCK position before servicing drive belt. The engine could rotate unexpectedly.

1. Visually inspect the belt for signs of unusual wear, cuts, or fraying. If the belt is in poor condition, have it replaced. It is recommended that you visit a NISSAN dealer for this service.
2. Have the belt checked regularly for condition.

SPARK PLUGS

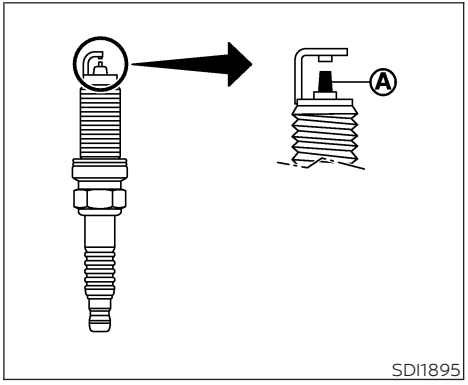

REPLACING SPARK PLUGS

Iridium-tipped spark plugs

It is not necessary to replace iridium-tipped Ⓐ spark plugs as frequently as conventional type spark plugs because they last much longer. Follow the maintenance log shown in the "Maintenance and schedules" section of this manual. Do not service iridium-tipped spark plugs by cleaning or regapping.

- **Always replace spark plugs with recommended or equivalent ones.**

⚠WARNING

Be sure the engine and ignition switch are off and that the parking brake is engaged securely.

⚠CAUTION

Be sure to use the correct socket to remove the spark plugs. An incorrect socket can damage the spark plugs.

If replacement is required, it is recommended that you visit a NISSAN dealer for this service.

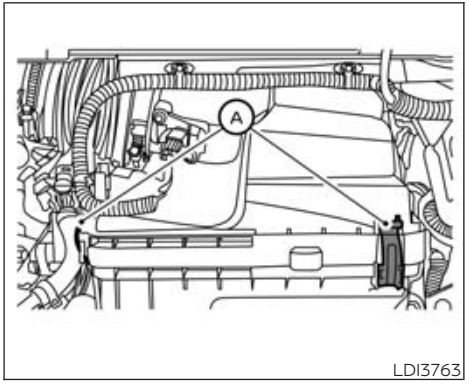

LDI3763

BASIC INFORMATION

The dry paper type filter element may be cleaned and reused. Replace it according to the maintenance log shown in the "Maintenance and schedules" section of this manual.

To remove the air cleaner filter:

1. Unlatch the retaining clips Ⓐ.
2. Move the air cleaner cover upwards.
3. Remove the air cleaner filter. Wipe the inside of the air cleaner filter housing and the cover with a damp cloth, then replace air cleaner filter.

NOTE:

After installing a new air cleaner filter, make sure the air cleaner cover is seated in the housing and latch the clips.

⚠WARNING

- **Operating the engine with the air cleaner removed can cause you or others to be burned. The air cleaner not only cleans the air, it stops the flame if the engine backfires. If it isn't there, and the engine backfires, you could be burned. Do not drive with the air cleaner removed, and be careful when working on the engine with the air cleaner removed.**
- **Never pour fuel into the throttle body or attempt to start the engine with the air cleaner removed. Doing so could result in serious injury.**

IN-CABIN MICROFILTER (if so equipped)

Your vehicle may be equipped with an in-cabin microfilter which collects dirt, pollen, dust, etc. and reduces some objectionable outside odors.

The in-cabin microfilter is located within the instrument panel. Replace the filter in accordance with the specified maintenance intervals listed in the "Maintenance and schedules" section of this manual.

If replacement is required, it is recommended that you visit a NISSAN dealer for this service.

The filter should be replaced if the air flow decreases significantly or if windows fog up easily when operating the heater or air conditioner.

CLEANING

If your windshield is not clear after using the windshield-washer or if a wiper blade chatters when running, wax or other material may be on the blade or windshield.

Clean the outside of the windshield with a washer solution or a mild detergent. Your windshield is clean if beads do not form when rinsing with clear water.

Clean each blade by wiping it with a cloth soaked in a washer solution or a mild detergent. Then rinse the blades with clear water. If your windshield is still not clear after cleaning the blades and using the wiper, replace the blades.

⚠ CAUTION

Worn windshield wiper blades can damage the windshield and impair driver vision.

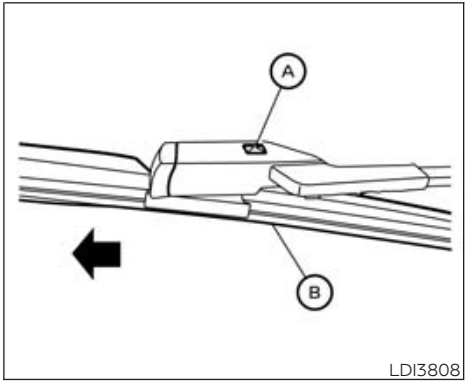

LDI3808

REPLACING

Basic information

Replace the wiper blades if they are worn.

To replace the windshield wiper blades, follow the procedure below:

1. Lift the wiper arm away from the windshield.
2. Push release tab Ⓐ.
3. Move the wiper blade Ⓑ up and remove.
4. Insert the new wiper blade onto the wiper arm until it clicks into place.
5. Push wiper on to windshield.

⚠ CAUTION

- **After wiper blade replacement, return the wiper arm to its original position; otherwise it may be damaged when the hood is opened.**
- **Make sure the wiper blades contact the glass; otherwise the arms may be damaged from wind pressure.**

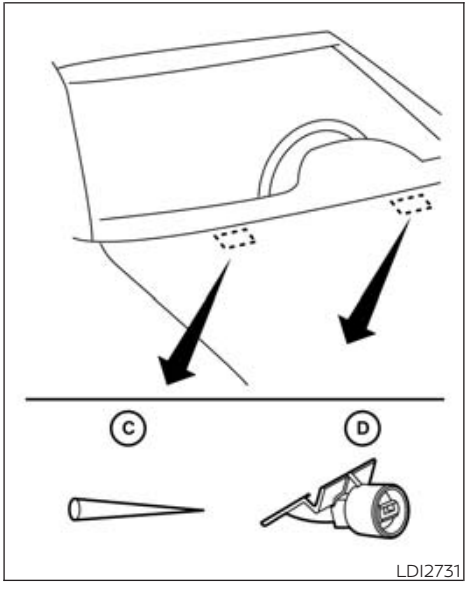

LDI2731

If you wax the surface of the hood, be careful not to let wax get into the washer nozzle Ⓓ. This may cause clogging or improper windshield-washer operation. If wax gets into the nozzle, remove it with a needle or small pin Ⓒ.

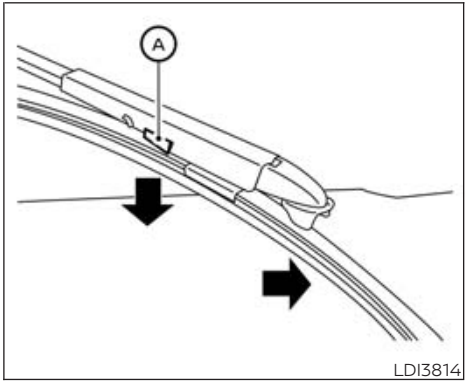

LDI3814

Rear window wiper blade

Replace the rear wiper blade if worn.

To replace the rear wiper blade, follow the procedure below;

1. Access the rear wiper service position by pushing the washer switch forward twice in under a second with the ignition in the OFF position.
2. Press the wiper blade release tabs Ⓐ inward, then rotate the wiper downward toward the rear window. Pull the wiper blade way from the arm and gently place the wiper arm to the window.

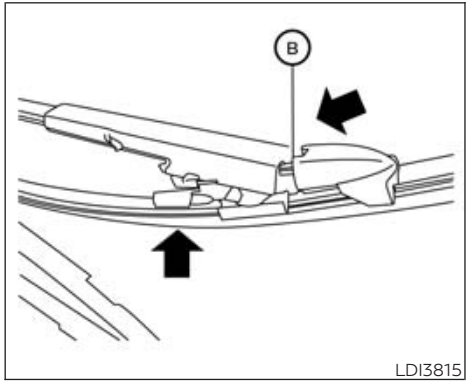

3. To install; angle the wiper blade so the wiper body connects onto the wiper arm, as shown Ⓑ.
4. Rotate the blade upward into the arm until the release tabs Ⓐ are fully seated into the wiper arm.
5. Push the rear wiper switch forward once or activate the rear wiper to return the rear wiper arm back to normal operating position.

BASIC INFORMATION

If the brakes do not operate properly, have the brakes checked. It is recommended that you visit a NISSAN dealer for this service.

SELF-ADJUSTING BRAKES

Your vehicle is equipped with self-adjusting brakes.

The front and rear disc-type brakes self-adjust every time the brake pedal is applied.

⚠WARNING

Have your brake system checked if the brake pedal height does not return to normal. It is recommended that you visit a NISSAN dealer for this service.

BRAKE PAD WEAR INDICATORS

The disc brake pads on your vehicle have audible wear indicators. When a brake pad requires replacement, a high pitched scraping or screeching sound will be heard when the vehicle is in motion. The noise will be heard whether or not the brake pedal is depressed. Have the brakes checked as soon as possible if the wear indicator sound is heard.

Under some driving or climate conditions, occasional brake squeak, squeal or other noise may be heard. Occasional brake noise during light to moderate stops is normal and does not affect the function or performance of the brake system.

Proper brake inspection intervals should be followed. For additional information regarding brake inspections, refer to the appropriate maintenance schedule information in the "Maintenance and schedules" section of this manual.

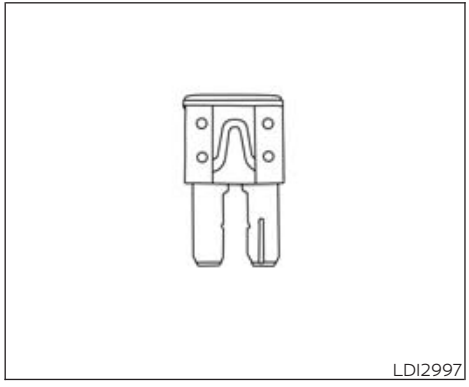

BASIC INFORMATION

If any electrical equipment does not operate, check for an open fuse.

Fuses are used in the passenger and engine compartment. Spare fuses are provided and can be found in the passenger compartment fuse box.

When installing a fuse make sure the fuse is installed in the fuse box securely.

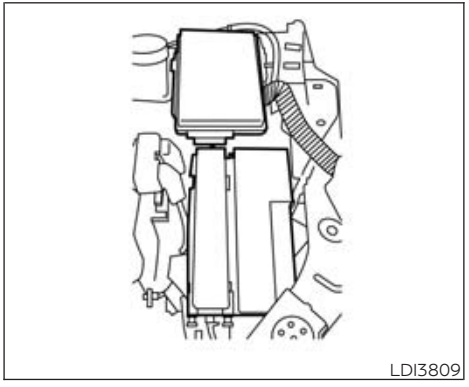

ENGINE COMPARTMENT

Basic information

⚠WARNING

Never use a fuse of higher or lower amperage rating than that specified on the fuse box cover. This could damage the electrical system or electronic control units or cause a fire.

If any electrical equipment does not come on, check for an open fuse.

1. Be sure the ignition switch and the headlight switch are OFF.
2. Open the engine hood.
3. Remove the fuse box cover by pushing the tab and lifting the cover up.
4. Remove the fuse with the fuse puller. The fuse puller is located in the center of the fuse block in the passenger compartment.

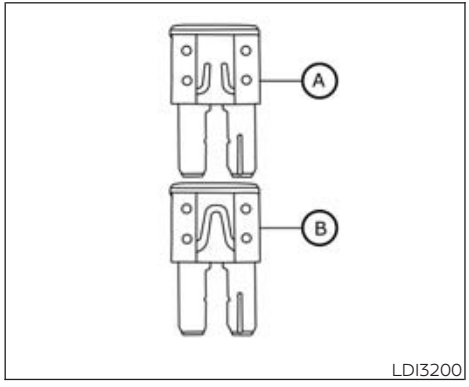

LDI3200

5. If the fuse is open Ⓐ, replace it with a new fuse Ⓑ.
6. If a new fuse also opens, have the electrical system checked and repaired. It is recommended that you visit a NISSAN dealer for this service.

NOTE:

Your vehicle may not be equipped with all the fuses listed on the fuse label.

Fusible links

If any electrical equipment does not operate and the fuses are in good condition, check the fusible links in the holder. If any of the fusible links are melted, replace only with Genuine NISSAN parts.

For checking and replacing the fusible links, it is recommended that you visit a NISSAN dealer for this service.

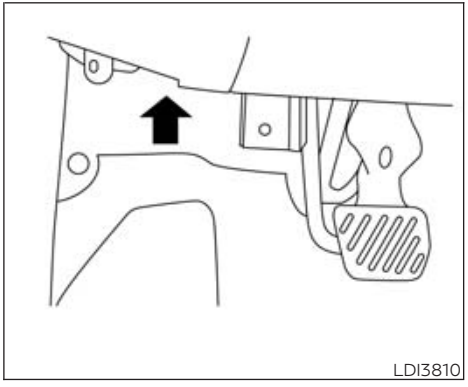
LDI3810

PASSENGER COMPARTMENT

⚠WARNING

Never use a fuse of higher or lower amperage rating than that specified on the fuse box diagram. This could damage the electrical system or electronic control units or cause a fire.

If any electrical equipment does not operate, check for an open fuse.

1. Be sure the ignition switch and the headlight switch are OFF.
2. Locate the fuse that needs to be replaced.

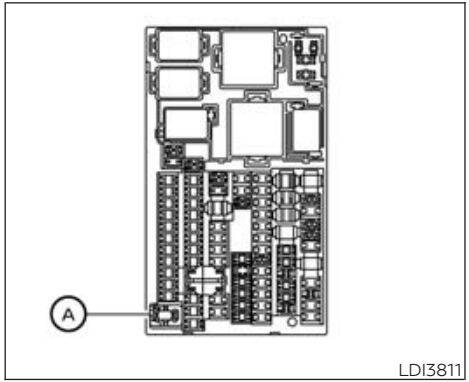

3. Remove the fuse with the fuse puller Ⓐ.

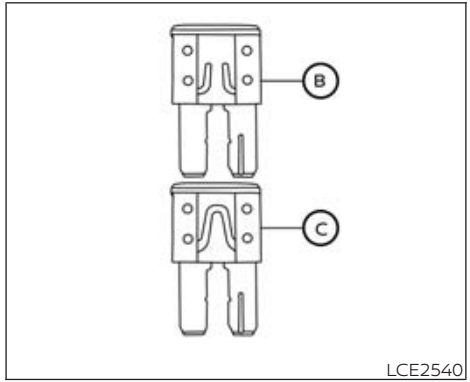

4. If the fuse is open Ⓑ, replace it with an equivalent good fuse Ⓒ.

If a new fuse also opens, have the electrical system checked and repaired. It is recommended that you visit a NISSAN dealer for this service.

NOTE:

Your vehicle may not be equipped with all the fuses listed on the diagram.

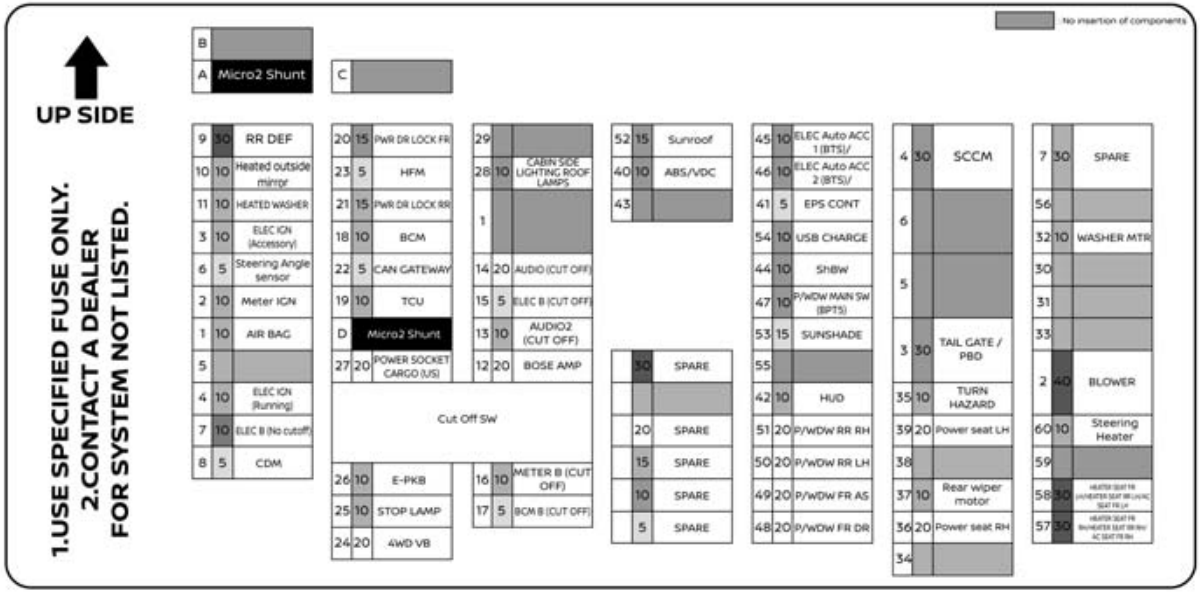
No insertion of components
UP SIDE
1.USE SPECIFIED FUSE ONLY.
2.CONTACT A DEALER
FOR SYSTEM NOT LISTED.
B
A Micro2 Shunt
C
9 30 RR DEF
10 10 Heated outside mirror
11 10 HEATED WASHER
3 10 ELEC IGN (Accessory)
6 5 Steering Angle sensor
2 10 Meter IGN
1 10 AIR BAG
5
4 10 ELEC IGN (Running)
7 10 ELEC B (No cutoff)
8 5 CDM
20 15 PWR DR LOCK FR
23 5 HFM
21 15 PWR DR LOCK RR
18 10 BCM
22 5 CAN GATEWAY
19 10 TCU
D Micro2 Shunt
27 20 POWER SOCKET CARGO (US)
Cut Off SW
26 10 E-PKB
25 10 STOP LAMP
24 20 4WD VB
29
28 10 CABIN SIDE LIGHTING ROOF LAMPS
1
14 20 AUDIO (CUT OFF)
15 5 ELEC B (CUT OFF)
13 10 AUDIO2 (CUT OFF)
12 20 BOSE AMP
16 10 METER B (CUT OFF)
17 5 BCM B (CUT OFF)
52 15 Sunroof
40 10 ABS/VDC
43
30 SPARE
20 SPARE
15 SPARE
10 SPARE
5 SPARE
45 10 ELEC Auto ACC 1 (BTS)/
46 10 ELEC Auto ACC 2 (BTS)/
41 5 EPS CONT
54 10 USB CHARGE
44 10 ShBW
47 10 P/WDW MAIN SW (BPTS)
53 15 SUNSHADE
55
42 10 HUD
51 20 P/WDW RR RH
50 20 P/WDW RR LH
49 20 P/WDW FR AS
48 20 P/WDW FR DR
4 30 SCCM
6
5
3 30 TAIL GATE / PBD
35 10 TURN HAZARD
39 20 Power seat LH
38
37 10 Rear wiper motor
36 20 Power seat RH
34
7 30 SPARE
56
32 10 WASHER MTR
30
31
33
2 40 BLOWER
60 10 Steering Heater
59
58 30
57 30

LDI3817

INTELLIGENT KEY BATTERY REPLACEMENT

BASIC INFORMATION

⚠ WARNING

- **Ingestion hazard: Death or serious injury can occur if ingested.**
- **A swallowed button cell or coin battery can cause internal chemical burns in as little as 2 hours.**
- **Keep new and used batteries out of reach of children.**
- **Be careful not to allow children or pets to swallow removed parts.**
- **Seek immediate medical attention if a battery is suspected to be swallowed or inserted inside any part of the body.**
- **For treatment information call the National battery ingestion hotline @ 1-800-498-8666.**
- **There is a danger of explosion if the battery is incorrectly replaced. Replace only with the same or equivalent type of battery. Incorrectly replacing the battery can lead to injury or death.**
- **Do not crush or cut the battery.**
- **Do not subject the battery to extremely low air pressure at high altitude.**
- **Do not expose the battery to excessive heat such as sunshine, fire or similar heat sources.**

⚠ CAUTION

- **An improperly disposed battery can harm the environment. Always confirm local regulations for battery disposal.**
- **When changing batteries, do not let dust or oil get on the components.**

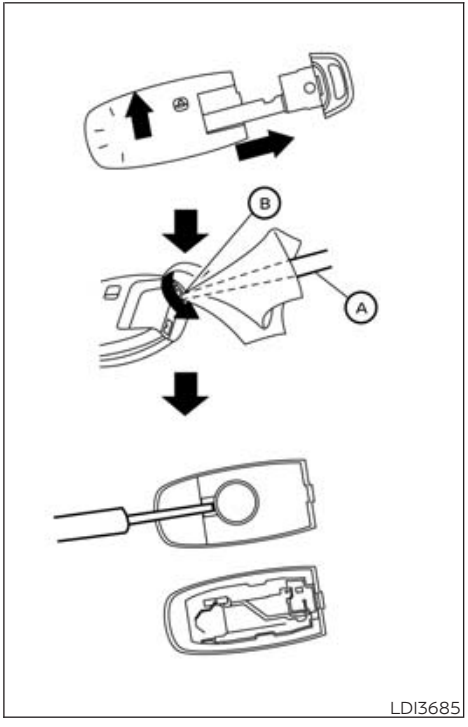

NISSAN INTELLIGENT KEY®

Replace the battery in the Intelligent Key as follows:

1. Remove the mechanical key from the Intelligent Key.
2. Insert a small flathead screwdriver Ⓐ into the slit Ⓑ of the corner and twist it to separate the upper part from the lower part. Place a cloth over the screwdriver to protect the casing.

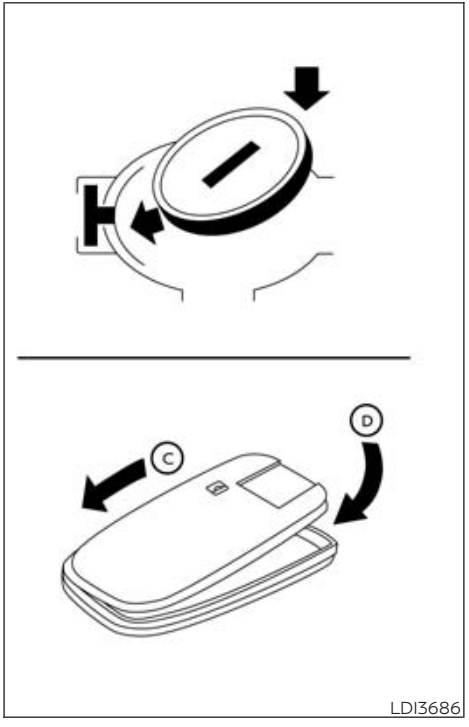

3. Replace the battery with a new one.

   Recommended battery: CR2032 or equivalent.

- Do not touch the internal circuit and electric terminals as doing so could cause a malfunction.
- Hold the battery by the edges. Holding the battery across the contact points will seriously deplete the storage capacity.
- Make sure that the + side faces the bottom of the lower part.

4. Close the lid securely as illustrated with Ⓒ and Ⓓ.
5. Operate the buttons to check the operation.

If you need assistance with replacement, it is recommended that you visit a NISSAN dealer for this service.

FCC Notice:

For USA:

This device complies with Part 15 of the FCC Rules. Operation is subject to the following two conditions: (1) This device may not cause harmful interference, and (2) this device must accept any interference received, including interference that may cause undesired operation.

Note:

Changes or modifications not expressly approved by the party responsible for compliance could void the user's authority to operate the equipment.

For Canada:

This device contains licence-exempt transmitter(s)/receiver(s) that comply with Innovation, Science and Economic Development Canada's licence-exempt RSS(s). Operation is subject to the following two conditions: (1) This device may not cause interference. (2) This device must accept any interference, including interference that may cause undesired operation of the device.

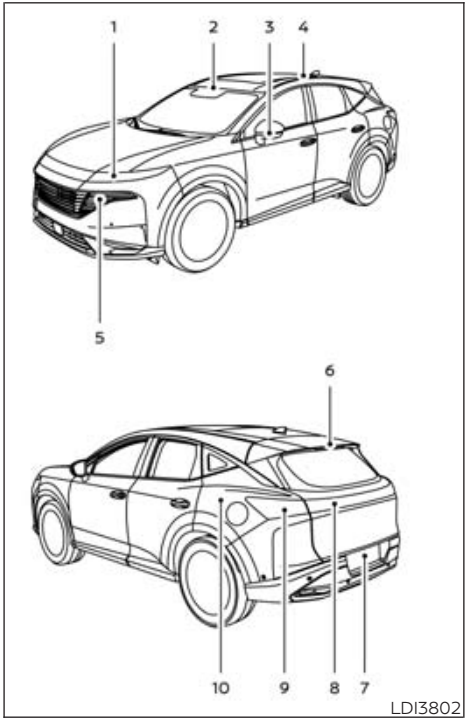

BASIC INFORMATION

1. Headlight assembly
2. Map lights
3. Door mirror turn signal lights (if so equipped)
4. Personal lights
5. Front combination light assembly
6. High-mounted stop light
7. License plate lights
8. Backup (reversing) light assembly
9. Rear combination light
10. Cargo lights

HEADLIGHTS

Fog may temporarily form inside the lens of the exterior lights in the rain or in a car wash. A temperature difference between the inside and the outside of the lens causes the fog. This is not a malfunction. If large drops of water collect inside the lens, it is recommended you visit a NISSAN dealer for this service.

If replacement is required, it is recommended you visit on NISSAN dealer for this service.

EXTERIOR AND INTERIOR LIGHTS

Basic information

This vehicle is equipped with LED lights. Visit your NISSAN dealer for LED light replacement, replacement bulb type or any bulb changing procedure not listed in the section.

- Vanity mirror lights*
  - Wattage (W): 5
  - Bulb No.: W5W

* It is recommended that you visit a NISSAN dealer for assistance.

Always check with the Parts Department at a NISSAN dealer for the latest parts information.

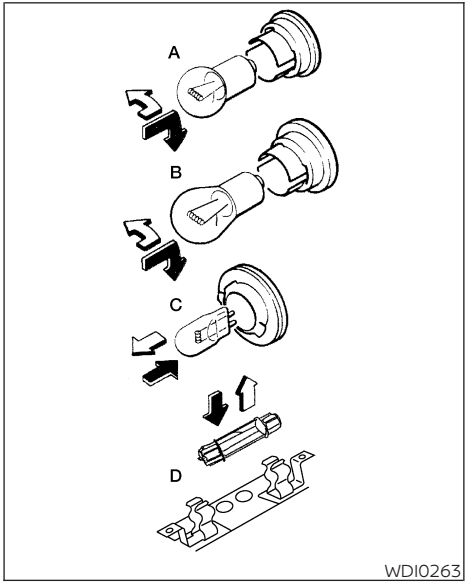

Replacement procedures

All other lights are either type A, B, C or D. When replacing a bulb, first remove the lens, lamp and/or cover.

⇧ Indicates bulb removal

⬆ Indicates bulb installation

BASIC INFORMATION

If you have a flat tire, see "Flat tire" (P. 457).

TIRE PRESSURE

Tire Pressure Monitoring System (TPMS)

⚠WARNING

Radio waves could adversely affect electric medical equipment. Those who use a pacemaker should contact the electric medical equipment manufacturer for the possible influences before use.

This vehicle is equipped with the Tire Pressure Monitoring System (TPMS). It monitors tire pressure of all tires except the spare. When the low tire pressure warning light is lit and the "Tire Pressure Low - Add Air" warning appears in the vehicle information display, one or more of your tires

is significantly under-inflated. If equipped, the system also displays pressure of all tires (except the spare tire) on the display screen by sending a signal from a sensor that is installed in each wheel.

The TPMS will activate only when the vehicle is driven at speeds above 16 mph (25 km/h). Also, this system may not detect a sudden drop in tire pressure (for example a flat tire while driving).

For additional information, see "Low tire pressure warning light" (P. 92), "Tire Pressure Monitoring System (TPMS)" (P. 271) and ""Flat tire" (P. 457).

Tire inflation pressure

Check the tire pressures (including the spare) often and always prior to long distance trips. The recommended tire pressure specifications are shown on the F.M.V.S.S./C.M.V.S.S. certification label or the Tire and Loading Information label under the "Cold Tire Pressure" heading. The Tire and Loading Information label is affixed to the driver side center pillar. Tire pressures should be checked regularly because:

- Most tires naturally lose air over time.
- Tires can lose air suddenly when driven over potholes or other objects or if the vehicle strikes a curb while parking.

The tire pressures should be checked when the tires are cold. The tires are considered COLD after the vehicle has been parked for 3 or more hours, or driven less than 1 mile (1.6 km) at moderate speeds.

The TPMS with Easy-Fill Tire Alert provides visual and audible signals outside the vehicle for inflating tires to the recommended COLD tire pressure. For additional information, see "TPMS with Easy-Fill Tire Alert" (P. 274).

Incorrect tire pressure, including under inflation, may adversely affect tire life and vehicle handling.

⚠WARNING

- **Improperly inflated tires can fail suddenly and cause an accident.**
- **The Gross Vehicle Weight Rating (GVWR) is located on the F.M.V.S.S./C.M.V.S.S. certification label. The vehicle weight capacity is indicated on the Tire and Loading Information label. Do not load your vehicle beyond this capacity. Overloading your vehicle may result in reduced tire life, unsafe operating conditions due to premature tire failure, or unfavorable handling characteristics and could**

also lead to a serious accident. Loading beyond the specified capacity may also result in failure of other vehicle components.

- **Before taking a long trip, or whenever you heavily load your vehicle, use a tire pressure gauge to ensure that the tire pressures are at the specified level.**
- **For additional information regarding tires, refer to "Important Tire Safety Information" (US) or "Tire Safety Information" (Canada) in the Warranty Information Booklet.**

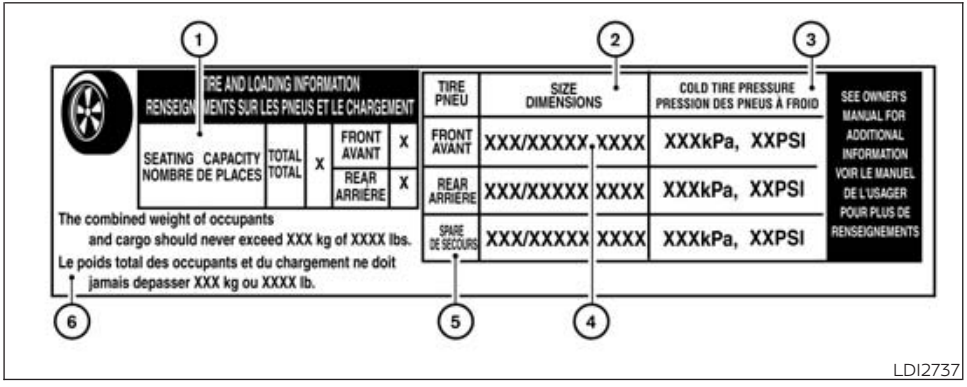

Tire and Loading Information label

① Seating capacity: The maximum number of occupants that can be seated in the vehicle.

② Tire size - see "Tire labeling" (P. 515).

③ Cold tire pressure: Inflate the tires to this pressure when the tires are cold. Tires are considered COLD after the vehicle has been parked for 3 or more hours, or driven less than 1 mile (1.6 km) at moderate speeds. The recommended cold tire inflation is set by the manufacturer to provide the best balance of tire wear, vehicle handling, driveability, tire noise, etc., up to the vehicle's GVWR.

④ Original tire size: The size of the tires originally installed on the vehicle at the factory.

⑤ Spare tire size.

⑥ Vehicle load limit: see "Vehicle loading information" (P. 568).

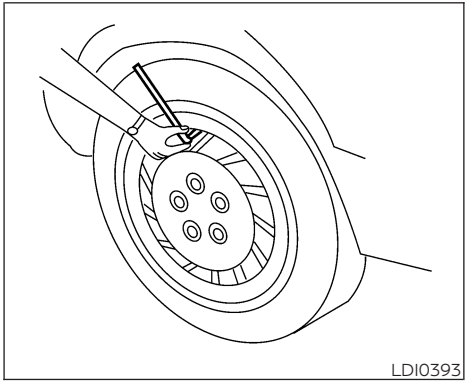

Checking tire pressure

1. Remove the valve stem cap from the tire.
2. Press the pressure gauge squarely onto the valve stem. Do not press too hard or force the valve stem sideways, or air will escape. If the hissing sound of air escaping from the tire is heard while checking the pressure, reposition the gauge to eliminate this leakage.
3. Remove the gauge.
4. Read the tire pressure on the gauge stem and compare to the specification shown on the Tire and Loading Information label.
5. Add air to the tire as needed. If too much air is added, press the core of the valve stem briefly with the tip of the gauge stem to release pressure. Recheck the pressure and add or release air as needed.
6. Install the valve stem cap.
7. Check the pressure of all other tires, including the spare.

Size/Cold Tire Inflation Pressure:

Front and Rear Original Tire

- 255/55R20
  - 35 psi
  - 240 kPa

Front and Rear Original Tire

- 255/50R21
  - 35 psi
  - 240 kPa

Spare Tire (if so equipped)

- T175/90D18
  - 60psi
  - 420kPa

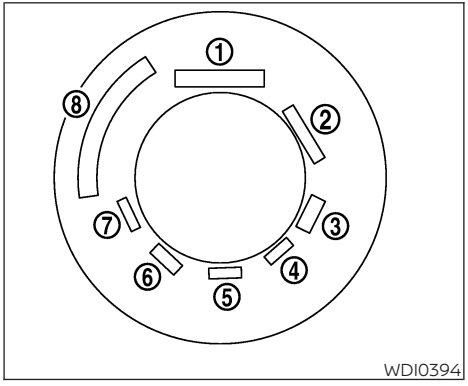

Example

TIRE LABELING

Basic information

Federal law requires tire manufacturers to place standardized information on the sidewall of all tires. This information identifies and describes the fundamental characteristics of the tire and also provides the Tire Identification Number (TIN) for safety standard certification. The TIN can be used to identify the tire in case of a recall.

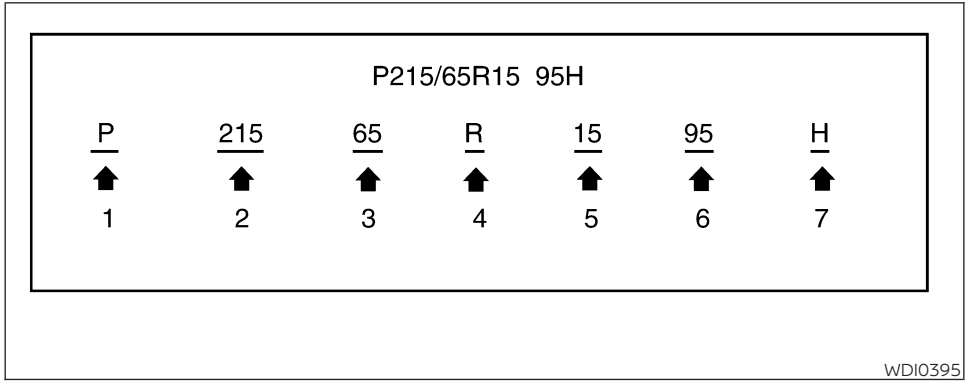

Example

① Tire size (example: P215/65R15 95H)

1. P. The "P" indicates the tire is designed for passenger vehicles (not all tires have this information).
2. Three-digit number (215): This number gives the width in millimeters of the tire from sidewall edge to sidewall edge.
3. Two-digit number (65): This number, known as the aspect ratio, gives the tire's ratio of height to width.
4. R: The "R" stands for radial.
5. Two-digit number (15): This number is the wheel or rim diameter in inches.
6. Two- or three-digit number (95): This number is the tire's load index. It is a measurement of how much weight each tire can support.
7. H: Tire speed rating. You should not drive the vehicle faster than the tire speed rating.

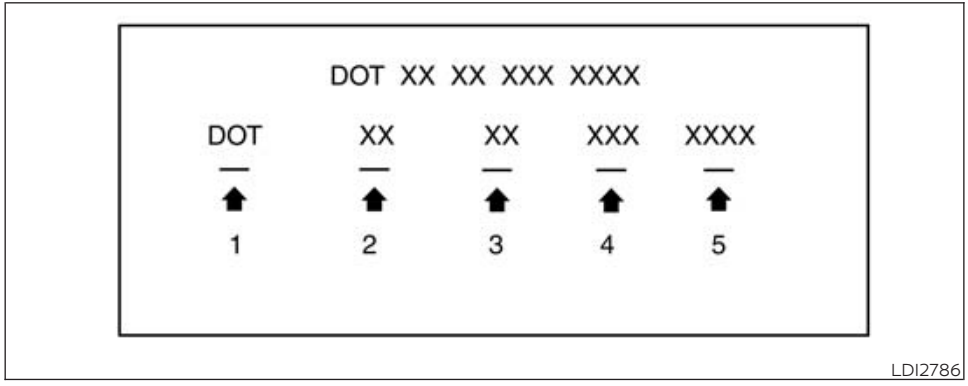

Example (Type A) (if so equipped)

② TIN (Tire Identification Number) for a new tire (example: DOT XX XX XXX XXXX)

1. DOT: Abbreviation for the "Department Of Transportation". The symbol can be placed above, below or to the left or right of the Tire Identification Number.
2. Two-digit code: Manufacturer's identification mark.
3. Two-digit code: Tire size.
4. Three-digit code: Tire type code (Optional).
5. Four numbers represent the week and year the tire was built. For example, the numbers 3103 means the 31st week of 2003. If these numbers are missing then look on the other sidewall of the tire.

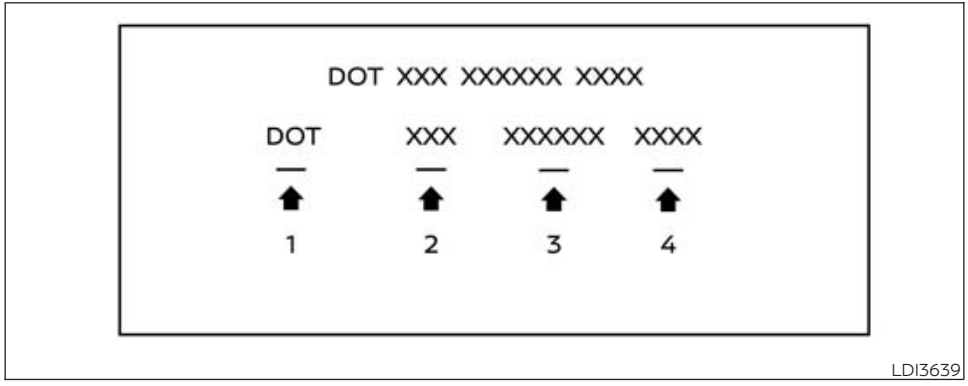

Example (Type B) (if so equipped)

② TIN (Tire Identification Number) for a new tire (example: DOT XXX XXXXXX XXXX)

1. DOT: Abbreviation for the "Department Of Transportation". The symbol can be placed above, below or to the left of the Tire Identification Number.
2. Three-digit code: Manufacturer's identification mark.
3. Six-digit code: Descriptive code used to identify significant characteristics of the tire.
4. Four numbers represent the week and year the tire was built. For example, the numbers 3103 means the 31st week of 2003.

③ Tire ply composition and material

The number of layers or plies of rubber-coated fabric in the tire. Tire manufacturers also must indicate the materials in the tire, which include steel, nylon, polyester and others.

④ Maximum permissible inflation pressure

This number is the greatest amount of air pressure that should be put in the tire. Do not exceed the maximum permissible inflation pressure.

⑤ Maximum load rating

This number indicates the maximum load in kilograms and pounds that can be carried by the tire. When replacing the tires on the vehicle, always use a tire that has the same load rating as the factory installed tire.

⑥ Term of "tubeless" or "tube type"

Indicates whether the tire requires an inner tube ("tube type") or not ("tubeless").

⑦ The word "radial"

The word "radial" is shown if the tire has radial structure.

⑧ Manufacturer or brand name

Manufacturer or brand name is shown.

Other Tire-related Terminology

In addition to the many terms that are defined throughout this section, Intended Outboard Sidewall is (1) the sidewall that contains a whitewall, bears white lettering or bears manufacturer, brand, and/or model name molding that is higher or deeper than the same molding on the other sidewall of the tire, or (2) the outward facing sidewall of an asymmetrical tire that has a particular side that must always face outward when mounted on a vehicle.

TYPES OF TIRES

Basic information

⚠ WARNING

- **When changing or replacing tires, be sure all four tires are of the same type (i.e., Summer, All Season or Snow) and construction. A NISSAN dealer may be able to help you with information about tire type, size, speed rating and availability.**
- **Replacement tires may have a lower speed rating than the factory equipped tires, and may not match the potential maximum vehicle speed. Never exceed the maximum speed rating of the tire.**
- **Replacing tires with those not originally specified by NISSAN could affect the proper operation of the low tire pressure warning system.**
- **Always use tires of the same type, size, brand, construction and tread pattern on all four wheels. Failure to do so may result in a circumference difference between tires on the front and rear axles which can cause the Vehicle Dynamic Control (VDC) system to malfunction resulting in personal injury or death, excessive tire wear and may damage the transmission, transfer case and differential gears.**
- **For additional information regarding tires, refer to "Important Tire Safety Information" (US) or "Tire Safety Information" (Canada) in the Warranty Information Booklet.**

All-Wheel Drive (AWD) models

⚠ CAUTION

- **ONLY use spare tires specified for the AWD model.**

If excessive tire wear is found, it is recommended that all four tires be replaced with tires of the same size, brand, construction and tread pattern. The tire pressure and wheel alignment should also be checked

and corrected as necessary. It is recommended that you visit a NISSAN dealer for this service.

All season tires

NISSAN specifies All Season tires on some models to provide good performance all year, including snowy and icy road conditions. All Season tires are identified by ALL SEASON and/or M&S on the tire sidewall. Snow tires have better snow traction than All Season tires and may be more appropriate in some areas.

Summer tires

NISSAN specifies summer tires on some models to provide superior performance on dry roads. Summer tire performance is substantially reduced in snow and ice. Summer tires do not have the tire traction rating "M&S" on the tire sidewall.

If you plan to operate your vehicle in snowy or icy conditions, NISSAN recommends the use of SNOW tires or ALL SEASON tires on all four wheels.

Snow tires

If snow tires are needed, it is necessary to select tires equivalent in size and load rating to the original equipment tires. If you do not, it can adversely affect the safety and handling of your vehicle.

Generally, snow tires have lower speed ratings than factory equipped tires and may not match the potential maximum vehicle speed. Never exceed the maximum speed rating of the tire.

If you install snow tires, they must be the same size, brand, construction and tread pattern on all four wheels.

For additional traction on icy roads, studded tires may be used. However, some U.S. states and Canadian provinces prohibit their use. Check local, state and provincial laws before installing studded tires. Skid and traction capabilities of studded snow tires on wet or dry surfaces may be poorer than that of non-studded snow tires.

TIRE CHAINS

⚠ WARNING

If tire chains are used with this vehicle, they must allow sufficient clearance between the tire and the closest vehicle suspension or body component. Failure to use the correct chains, or not properly installing chains, can damage the brakes, suspension or other vehicle parts and cause a crash in which a person could be seriously injured or killed.

Use of tire chains may be prohibited according to location. Check the local laws before installing tire chains. When installing tire chains, make sure they are the proper size for the tires on your vehicle and are installed according to the chain manufacturer's suggestions. **Use only SAE class "S" chains.** Class "S" chains are used on vehicles with restricted tire to vehicle clearance. Vehicles that can use Class "S" chains are designed to meet the minimum clearances between the tire and the closest vehicle suspension or body component required to accommodate the use of a winter traction device (tire chains or cables).

The minimum clearances are determined using the factory equipped tire size. Other types may damage your vehicle. Use chain tensioners when recommended by the tire chain manufacturer to ensure a tight fit. Loose end links of the tire chain must be secured or removed to prevent the possibility of whipping action damage to the fenders or underbody. If possible, avoid fully loading your vehicle when using tire chains. In addition, drive at a reduced speed. Otherwise, your vehicle may be damaged and/or vehicle handling and performance may be adversely affected.

Do not use tire chains on dry roads. Driving with chains in such conditions can cause damage to the various mechanisms of the vehicle due to some overstress.

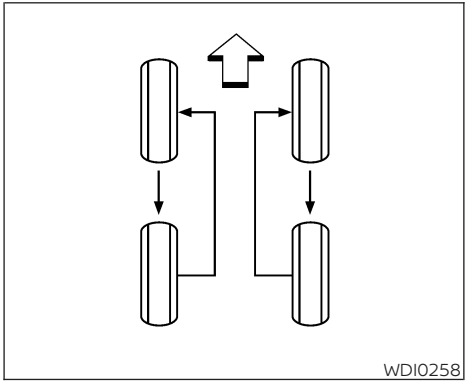

CHANGING WHEELS AND TIRES

Tire rotation

NISSAN recommends rotating the tires every 7,500 miles (12,000 km).

For additional information on tire replacing procedures, see "Flat tire" (P. 457).

As soon as possible, tighten the wheel nuts to the specified torque with a torque wrench.

Wheel nut tightening torque: 83 ft-lb (113 N·m)

The wheel nuts must be kept tightened to specifications at all times. It is recommended that wheel nuts be tightened to specification at each tire rotation interval.

⚠ WARNING

- **After rotating the tires, check and adjust the tire pressure.**
- **Retighten the wheel nuts when the vehicle has been driven for 600 miles (1,000 km) (also in cases of a flat tire, etc.).**
- **Do not include the spare tire in the tire rotation.**
- **For additional information regarding tires, refer to "Important Tire Safety Information" (US) or "Tire Safety Information" (Canada) in the Warranty Information Booklet.**

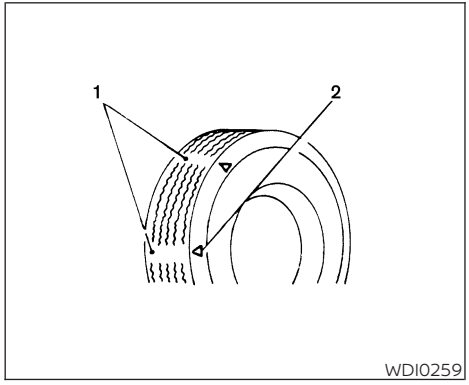

Tire wear and damage

1. Wear indicator
2. Location mark

⚠WARNING

- **Tires should be periodically inspected for wear, cracking, bulging or objects caught in the tread. If excessive wear, cracks, bulging or deep cuts are found, the tire(s) should be replaced.**
- **The original tires have built-in tread wear indicators. When the wear indicators are visible, the tire(s) should be replaced.**
- **Tires degrade with age and use. Have tires, including the spare, over 6 years old checked by a qualified technician because some tire damage may not be obvious. Replace the tires as necessary to prevent tire failure and possible personal injury or death.**
- **Improper service of the spare tire may result in serious personal injury or death. If it is necessary to repair the spare tire, it is recommended that you visit a NISSAN dealer for this service.**
- **For additional information regarding tires, refer to "Important Tire Safety Information" (US) or "Tire Safety Information" (Canada) in the Warranty Information Booklet.**

Replacing wheels and tires

When replacing a tire, use the same size, tread design, speed rating and load carrying capacity as originally equipped. For additional information, see "Wheels and tires" (P. 563).

⚠ WARNING

- **The use of tires other than those recommended or the mixed use of tires of different brands, construction (bias, bias-belted or radial), or tread patterns can adversely affect the ride, braking, handling, VDC system, ground clearance, body-to-tire clearance, tire chain clearance, speedometer calibration, headlight aim and bumper height. Some of these effects may lead to accidents and could result in serious personal injury.**
- **For 2WD models, if your vehicle was originally equipped with four tires that were the same size and you are only replacing two of the four tires, install the new tires on the rear axle. Placing new tires on the front axle may cause loss of vehicle control in some driving conditions and cause an accident and personal injury.**
- **If the wheels are changed for any reason, always replace with wheels which have the same off-set dimension. Wheels of a different off-set could cause premature tire wear, degrade vehicle handling characteristics, affect the VDC system and/or interference with the brake discs. Such interference can lead to decreased braking efficiency and/or early brake pad wear. For additional information on wheel off-set dimensions, see "Wheels and tires" (P. 563).**
- **When using a wheel without the TPMS, such as the spare tire, the TPMS will not function and the low tire pressure warning light will flash for approximately 1 minute. The light will remain on after 1 minute. Have your tires replaced and/or TPMS system reset as soon as possible. It is recommended that you visit a NISSAN dealer for this service.**
- **Replacing tires with those not originally specified by NISSAN could affect the proper operation of the TPMS.**
- **The TPMS sensor may be damaged if it is not handled correctly. Be careful when handling the TPMS sensor.**
- **When replacing the TPMS sensor, the ID registration may be required. It is recommended that you visit a NISSAN dealer for ID registration.**
- **Do not use a valve stem cap that is not specified by NISSAN. The valve stem cap may become stuck.**
- **Be sure that the valve stem caps are correctly fitted. Otherwise the valve may be clogged up with dirt and cause a malfunction or loss of pressure.**
- **Do not install a damaged or deformed wheel or tire even if it has been repaired. Such wheels or tires could have structural damage and could fail without warning.**
- **The use of retread tires is not recommended.**
- **For additional information regarding tires, refer to "Important Tire Safety Information" (US) or "Tire Safety Information" (Canada) in the Warranty Information Booklet.**

Wheel balance

Unbalanced wheels may affect vehicle handling and tire life. Even with regular use, wheels can get out of balance. Therefore, they should be balanced as required.

Wheel balance service should be performed with the wheels off the vehicle. Spin balancing the wheels on the vehicle could lead to mechanical damage.

- **For additional information regarding tires, refer to "Important Tire Safety Information" (US) or "Tire Safety Information" (Canada) in the Warranty Information Booklet.**

Care of wheels

- Wash the wheels when washing the vehicle to maintain their appearance.
- Clean the inner side of the wheels when the wheel is changed or the underside of the vehicle is washed.
- Do not use abrasive cleaners when washing the wheels.
- Inspect wheel rims regularly for dents or corrosion. Such damage may cause loss of pressure or poor seal at the tire bead.
- NISSAN recommends waxing the road wheels to protect against road salt in areas where it is used during winter.

Spare tire (TEMPORARY USE ONLY spare tire) (if so equipped)

When using a wheel without the TPMS such as the spare tire, the TPMS will not function.

Observe the following precautions if the TEMPORARY USE ONLY spare tire must be used. Otherwise, your vehicle could be damaged or involved in an accident:

⚠ WARNING

- **The spare tire should be used for emergency use only. It should be replaced with the standard tire at the first opportunity to avoid possible tire or differential damage.**
- **Drive carefully while the TEMPORARY USE ONLY spare tire is installed. Avoid sharp turns and abrupt braking while driving.**
- **Periodically check spare tire inflation pressure. Always keep the pressure of the TEMPORARY USE ONLY spare tire at 60 psi (420 kPa, 4.2 bar).**
- **With the TEMPORARY USE ONLY spare tire installed do not drive the vehicle at speeds faster than 50 mph (80 km/h).**
- **When driving on roads covered with snow or ice, the TEMPORARY USE ONLY spare tire should be used on the rear wheels and the original tire used on the front wheels (drive wheels).**
- **Tire tread of the TEMPORARY USE ONLY spare tire will wear at a faster rate than the standard tire. Replace the spare tire as soon as the tread wear indicators appear.**
- **Do not use the spare tire on other vehicles.**
- **Do not use more than one spare tire at the same time.**
- **Do not tow a trailer when the TEMPORARY USE ONLY spare tire is installed.**

⚠ CAUTION

- **Do not use tire chains on a TEMPORARY USE ONLY spare tire. Tire chains will not fit properly and may cause damage to the vehicle.**
- **Because the TEMPORARY USE ONLY spare tire is smaller than the original tire, ground clearance is reduced. To avoid damage to the vehicle, do not drive over obstacles. Also, do not**

drive the vehicle through an automatic car wash since it may get caught.

Emergency tire puncture repair kit (if so equipped)

The emergency tire puncture repair kit (Emergency Tire Sealant) is supplied with the vehicle instead of a spare tire. It can be used to temporarily repair minor tire punctures.

If possible, have the vehicle towed to a facility that can repair or replace the flat tire. Using the emergency tire puncture repair kit may cause a malfunction of the tire pressure sensor and cause the low tire pressure warning light to illuminate.

For additional information, see "Flat tire" (P. 457).

NOTE:

For models with the emergency tire puncture repair kit, a spare tire, jack and rod are not equipped as standard.

MEMO

9 Maintenance and schedules

Maintenance requirements 528
Basic information 528
General maintenance 528
Scheduled maintenance 528
Where to go for service 528
General maintenance 528
Basic information 528
Explanation of general maintenance items 528
Explanation of scheduled maintenance items . . . 531
Basic information 531
Emission control system maintenance: 532
Chassis and body maintenance: 532
Maintenance schedules 533
Basic information 533
Additional maintenance Items for severe operating conditions 533
Oil control system 533
2.0L 4 cylinder (KR20DDET engine model) 535

BASIC INFORMATION

Some day-to-day and regular maintenance is essential to maintain your vehicle good mechanical condition, as well as its emissions and engine performance.

It is the owner's responsibility to make sure that the scheduled maintenance, as well as general maintenance, is performed.

As the vehicle owner, you are the only one who can ensure that your vehicle receives proper maintenance. You are a vital link in the maintenance chain.

GENERAL MAINTENANCE

General maintenance includes those items which should be checked during normal day-to-day operation. They are essential for proper vehicle operation. It is your responsibility to perform these procedures regularly as prescribed.

Performing general maintenance checks requires minimal mechanical skill and only a few general automotive tools.

These checks or inspections can be done by yourself, a qualified technician or, if you prefer, a NISSAN dealer.

SCHEDULED MAINTENANCE

The maintenance items listed in this section are required to be serviced at regular intervals. However under severe driving conditions, additional or more frequent maintenance will be required.

WHERE TO GO FOR SERVICE

If maintenance service is required or your vehicle appears to malfunction, have the systems checked and serviced. It is recommended that you visit a NISSAN dealer for this service.

NISSAN technicians are well-trained specialists and are kept up-to-date with the latest service information through technical bulletins, service tips and training programs. They are fully qualified to work on NISSAN vehicles **before** work begins.

If your vehicle is involved in a collision, it is recommended that you ask your NISSAN dealer where the nearest NISSAN Certified Collision Center is located, or go to http://collision.nissanusa.com.

You can be confident that a NISSAN dealer's service department can perform the service needed to meet the maintenance requirements on your vehicle.

BASIC INFORMATION

During the normal day-to-day operation of the vehicle, general maintenance should be performed regularly as prescribed in this section. If you detect any unusual sounds, vibrations or smells, be sure to check for the cause or have it checked promptly. In addition, it is recommended that you visit a NISSAN dealer if you think that repairs are required.

When performing any checks or maintenance work, see "Maintenance precautions" (P. 486).

EXPLANATION OF GENERAL MAINTENANCE ITEMS

Basic information

⚠WARNING

Failure to follow the procedures listed within this section may result in personal injury.

Additional information on the following items with " * " is found in the "Do-it-yourself" section of this manual.

Outside the vehicle

The maintenance items listed here should be performed from time to time, unless otherwise specified.

Doors and engine hood: Check that the doors and engine hood operate properly. Also ensure that all latches lock securely. Lubricate hinges, latches, latch pins, rollers and links if necessary. Make sure that the secondary latch keeps the hood from opening when the primary latch is released.

When driving in areas using road salt or other corrosive materials, check lubrication frequently.

Check that the gas stays or struts properly and securely hold the hood, trunk, or rear hatch in a fully open position. If the hood, trunk, or rear hatch is not held open, have the gas stays or struts replaced.

Lights*: Clean the headlights on a regular basis. Make sure that the headlights, stop lights, tail lights, turn signal lights, and other lights are all operating properly and installed securely. Also check headlight aim.

Road wheel nuts (lug nuts)*: When checking the tires, make sure no wheel nuts are missing, and check for any loose wheel nuts. Tighten if necessary.

Tire rotation*: Rotate tires at the specified interval shown in the maintenance schedule.

Tires*: Check the pressure with a gauge often and always prior to long distance trips. If necessary, adjust the pressure in all tires, including the spare, to the pressure specified. Check carefully for damage, cuts or excessive wear.

Tire Pressure Monitoring System (TPMS) tire pressure sensor: It is recommended that you replace the TPMS tire pressure assembly when the tires are replaced due to wear or age.

Wheel alignment and balance: If the vehicle should pull to either side while driving on a straight and level road, or if you detect uneven or abnormal tire wear, there may be a need for wheel alignment. If the steering wheel or seat vibrates at normal highway speeds, wheel balancing may be needed.

For additional information regarding tires, refer to "Important Tire Safety Information" (US) or "Tire Safety Information" (Canada) in the Warranty Information Booklet.

Windshield: Clean the windshield on a regular basis. Check the windshield at least every six months for cracks or other damage. Have a damaged windshield repaired by a qualified repair facility. It is recommended that you have a damaged windshield repaired by a NISSAN dealer, or a NISSAN Certified Collision Center. To locate a collision center in your area, refer to http://collision.nissanusa.com.

Windshield wiper blades*: Check for cracks or wear if they do not wipe properly.

Inside the vehicle

The maintenance items listed here should be checked on a regular basis, such as when performing scheduled maintenance, cleaning the vehicle, etc.

Accelerator pedal: Check the pedal for smooth operation and make sure the pedal does not catch or require uneven effort. Keep the floor mat away from the pedal.

Brake pedal: Check the pedal for smooth operation. If the brake pedal suddenly goes down further than normal, the pedal feels spongy or the vehicle seems to take longer to stop, have your vehicle checked immediately. It is recommended that you visit a NISSAN dealer for this service. Keep the floor mat away from the pedal.

Brakes: Check that the brakes do not pull the vehicle to one side when applied.

Automatic transmission P (Park) position mechanism: On a fairly steep hill check that the vehicle is held securely with the shift position in the P (Park) position without applying any brakes.

Parking brake: Check the parking brake operation regularly. The vehicle should be securely held on a fairly steep hill with only the parking brake applied. If the parking brake needs adjustment, it is recommended that you visit a NISSAN dealer for this service.

Seats: Check seat position controls such as seat adjusters, seatback recliner, etc., to ensure they operate smoothly and all latches lock securely in every position. Check that the head restraints/headrests move up and down smoothly and the locks (if so equipped) hold securely in all latched positions.

Seat belts: Check that all parts of the seat belt system (for example, buckles, anchors, adjusters and retractors) operate properly and smoothly, and are installed securely. Check the belt webbing for cuts, fraying, wear or damage.

Steering wheel: Check for changes in the steering system, such as excessive free play, hard steering or strange noises.

Warning lights and chimes: Make sure all warning lights and chimes are operating properly.

Windshield defroster: Check that the air comes out of the defroster outlets properly and in sufficient quantity when operating the heater or air conditioner.

Windshield wiper and washer*: Check that the wipers and washer operate properly and that the wipers do not streak.

Under the hood and vehicle

The maintenance items listed here should be checked periodically (for example, each time you check the engine oil or refuel).

Battery* (for maintenance free batteries): This vehicle is equipped with a sealed maintenance free battery. It is recommended that you visit a NISSAN dealer for service.

NOTE:

Care should be taken to avoid situations that can lead to potential battery discharge and potential no-start conditions such as:

1. **Installation or extended use of electronic accessories that consume battery power when the engine is not running (Phone chargers, GPS, DVD players, etc.).**
2. **Vehicle is not driven regularly and/or only driven short distances.**

In these cases, the battery may need to be charged to maintain battery health.

Brake fluid level*: Make sure that the brake fluid level is between the MAX and MIN lines on the reservoir.

Engine coolant level*: Check the coolant level when the engine is cold.

Engine drive belts*: Make sure the drive belts are not frayed, worn, cracked or oily.

Engine oil level*: Check the level after parking the vehicle on a level spot and turning off the engine. Wait more than 15 minutes for the oil to drain back into the oil pan.

Engine valve clearance*: Inspect if valve noise increases.

Exhaust system: Make sure there are no loose supports, cracks or holes. If the sound of the exhaust seems unusual or there is a smell of exhaust fumes, immediately have the exhaust system inspected. It is recommended that you visit a NISSAN dealer for this service. For additional information, see "Exhaust gas (carbon monoxide)" (P. 270).

Fluid leaks: Check under the vehicle for fuel, oil, water or other fluid leaks after the vehicle has been parked for a while. Water dripping from the air conditioner after use is normal. If you should notice any leaks or if fuel fumes are evident, check for the cause and have it corrected immediately.

Radiator and hoses: Check the front of the radiator and clean off any dirt, insects, leaves, etc., that may have accumulated. Make sure the hoses have no cracks, deformation, rot or loose connections.

Underbody: The underbody is frequently exposed to corrosive substances such as those used on icy roads or to control dust. It is very important to remove these substances, otherwise rust may form on the floor pan, frame, fuel lines and around the exhaust system. At the end of winter, the underbody should be thoroughly flushed with plain water, being careful to clean those areas where mud and dirt may accumulate. For additional information, see "Cleaning exterior" (P. 478).

Windshield-washer fluid*: Check that there is adequate fluid in the reservoir.

EXPLANATION OF SCHEDULED MAINTENANCE ITEMS

BASIC INFORMATION

The following descriptions are provided to give you a better understanding of the scheduled maintenance items that should be regularly checked or replaced. The maintenance schedule indicates at which mileage/time intervals each item requires service.

In addition to scheduled maintenance, your vehicle requires that some items be checked during normal day-to-day operation. For additional information, see "General maintenance" (P. 528).

Items marked with **"*"** are recommended by NISSAN for reliable vehicle operation. You are not required to perform maintenance on these items in order to maintain the warranties which come with your NISSAN. Other maintenance items and intervals are required.

When applicable, additional information can be found in the "Do-it-yourself" section of this manual.

NOTE:

NISSAN does not advocate the use of non-OEM approved aftermarket flushing systems and strongly advises against performing these services on a NISSAN product. Many of the aftermarket flushing systems use non-OEM approved chemicals or solvents, the use of which has not been validated by NISSAN.

For recommended fuel, lubricants, fluids, grease, and refrigerant, see "Recommended fluids/lubricants and capacities" (P. 557).

EMISSION CONTROL SYSTEM MAINTENANCE:

Air cleaner filter Replace at specified intervals. When driving for prolonged periods in dusty conditions, check/replace the filter more frequently.

Engine coolant*: Replace coolant at the specified interval. When adding or replacing coolant, be sure to use only Genuine NISSAN Long Life Antifreeze/Coolant (blue) or equivalent with the proper mixture. (For additional information on the proper mixture for your area, see "Engine cooling system" (P. 488).

NOTE:

Mixing any other type of coolant or the use of non-distilled water may reduce the recommended service interval of the coolant.

Engine drive belts*: Check engine drives belt for wear, fraying or cracking and for proper tension. Replace any damaged drive belt.

Engine oil and oil filter: Replace engine oil and oil filter at the specified intervals. For recommended oil grade and viscosity see "Recommended fluids/lubricants and capacities" (P. 557).

Engine valve clearance*: Inspect only if valve noise increase. Adjust valve clearance if necessary.

Fuel filter*: Periodic maintenance is not required. (in-tank type filter)

Fuel lines/connections*: Check the fuel hoses, piping and connections for leaks, looseness, or deterioration. Tighten connections or replace parts as necessary.

Fuel tank vapor system*: Check vapor lines for leaks or looseness. Tighten connections or replace parts as necessary.

Spark plugs: Replace at specified intervals. Install new plugs of the same type as originally equipped.

CHASSIS AND BODY MAINTENANCE:

Brake lines: Visually inspect for proper installation. Check for chafing, cracks, deterioration, and signs of leaking. Replace any deteriorated or damaged parts immediately.

Brake pads and rotors: Check for wear, deterioration and fluid leaks. Replace any deteriorated or damaged parts immediately.

Exhaust system: Visually inspect the exhaust pipes, muffler and hangers for leaks, cracks, deterioration, and damage. Tighten connections or replace parts as necessary.

In-cabin microfilter: Replace at specified intervals. When driving for prolonged periods in dusty conditions, replace the filter more frequently.

Propeller shaft(s): Check for damage, looseness, and grease leakage. (AWD)

Steering gear and linkage, axle and suspension parts, drive shaft boots: Check for damage, looseness, and leakage of oil or grease. Under severe driving conditions, inspect more frequently.

Tire rotation: Rotate tires at the specified interval shown in the maintenance schedule. When rotating tires, check for damage and uneven wear. Replace if necessary.

Transfer case oil, differential gear oil, coupling oil (AWD models): Visually inspect for signs of leakage at specified intervals.

Transmission fluid/oil: Replace at specified intervals.

Off-Road Maintenance Check the following items frequently whenever you drive off-road through deep sand, mud or water:

- Brake pads and rotors
- Brake lines and hoses
- Differential, transmission and transfer case oil
- Steering linkage
- Propeller shaft(s) and front drive shafts
- Air cleaner filter

BASIC INFORMATION

To help ensure smooth, safe and economical driving, NISSAN provides two maintenance schedules that may be used, depending upon the conditions in which you usually drive. These schedules contain both distance and time intervals, up to 120,000 miles (192,000 km)/192 months. For most people, the odometer reading will indicate when service is needed. However, if you drive very little, your vehicle should be serviced at the regular time intervals shown in the schedule.

After 120,000 miles (192,000 km)/192 months, continue maintenance at the same mileage/time intervals.

ADDITIONAL MAINTENANCE ITEMS FOR SEVERE OPERATING CONDITIONS

Additional maintenance items for severe operating conditions should be performed on vehicles that are driven under especially demanding conditions. Additional maintenance items should be performed if you primarily operate your vehicle under the following conditions:

- Repeated short trips of less than 5 miles (8 km).
- Repeated short trips of less than 10 miles (16 km) with outside temperatures remaining below freezing.
- Operating in hot weather in stop-and-go "rush hour" traffic.
- Extensive idling and/or low speed driving for long distances, such as police, taxi or door-to-door delivery use.
- Driving in dusty conditions.
- Driving on rough, muddy or salt spread roads.
- Towing a trailer, using a camper or using a car-top carrier.

If your vehicle is mainly operated under the severe conditions, follow the severe use maintenance intervals shown in the maintenance schedule.

OIL CONTROL SYSTEM

Your vehicle is equipped with oil control system. It calculates engine oil and filter change intervals based on driving conditions. Driving in the following severe conditions will shorten the engine oil and filter change interval.

How driving conditions affect OCS display timing

2.0L 4 cylinder (KR20DDET engine model):

In light driving conditions, the display timing will be normal under the following driving scenes:

- Freeway driving
- City driving (flat/moderate hills)
- No towing or heavy loads
- No extended engine idling

In extreme driving conditions, the display timing will be early under the following driving scenes:

- Repeated short trips of less than 5 miles (8 km).
- Repeated short trips of less than 10 miles (16 km) with outside temperatures remaining below freezing.
- Operating in hot weather in stop-and-go "rush hour" traffic.
- Extensive idling and/or low speed driving for long distances, such as police, taxi or door-to-door delivery use.
- Towing a trailer or caravan, or using a car-top carrier.
- Driving with frequent use of braking or in mountainous areas.
- Sustained high speed driving.

⚠ CAUTION

- **If the oil replacement indicator is displayed, please change the engine oil and filter within two weeks or less than 500 miles (800 km). After replacing the engine oil, reset the display.**
- **Operating your vehicle with deteriorated oil can damage the engine.**
- **If your oil replacement indicator resets prematurely or becomes inoperative, please change the oil within six months or 3,750 miles (6,000 km) from your last oil change.**

2.0L 4 CYLINDER (KR20DDET engine model)

Basic information

The following shows the maintenance schedule.

Choose the maintenance schedule needed based on your vehicle driving conditions.

After 120,000 miles (192,000 km)/ 192 months, continue maintenance at the same mileage/time interval.

3,750 miles/(6,000 km)/6 months

Perform at number of miles, kilometers or months, whichever comes first.

Standard maintenance:

Not applicable. Proceed to next interval.

Severe use maintenance:

Inspections:

- Brake pads & rotors
- Steering gear & linkage
- Axle & suspension parts
- Propeller shaft (AWD models)
- Drive shaft boots
- Exhaust system

Essentials:

- Tire rotation

7,500 miles/(12,000 km)/12 months

Perform at number of miles, kilometers or months, whichever comes first.

Standard maintenance:

Inspections:

- Brake lines
- Brake pads & rotors
- Propeller shaft (AWD models)
- Drive shaft boots
- Transfer case oil (AWD models)
- Differential gear oil (AWD models)
- Coupling oil (AWD models)
- Intelligent Key battery* (1)

Essential:

- Replace engine oil & oil filter (2)
- Replace In-cabin microfilter
- Tire rotation

Severe use maintenance:

Inspections:

- Brake pads & rotors
- Steering gear & linkage
- Axle & suspension parts
- Propeller shaft (AWD models)
- Drive shaft boots
- Exhaust system

Essential:

- Replace brake fluid

(1) Performed based on the number of service months only.

(2) If the oil replacement indicator is displayed, change the engine oil and filter within two weeks or less than 500 miles (800 km). After replacing the engine oil, reset the display.

* Maintenance items and intervals with "*" are recommended by NISSAN for reliable vehicle operation. The owner need not perform such maintenance in order to maintain the emission warranty or manufacturer recall liability. Other maintenance items and intervals are required.

11,250 miles/(18,000 km)/ 18 months

Perform at number of miles, kilometers or months, whichever comes first.

Standard maintenance:

Not applicable. Proceed to the next interval.

Severe use maintenance:

Inspections:

- Brake pads & rotors
- Steering gear & linkage
- Axle & suspension parts
- Propeller shaft (AWD models)
- Drive shaft boots
- Exhaust system

Essentials:

- Tire rotation

15,000 miles/(24,000 km)/ 24 months

Perform at number of miles, kilometers or months, whichever comes first.

Standard maintenance:

Inspections:

- Brake lines
- Brake pads & rotors
- Fuel tank vapor vent system*
- Exhaust system
- Propeller shaft (AWD models)
- Drive shaft boots
- Steering gear & linkage
- Axle & suspension parts
- Transfer case oil (AWD models)
- Differential gear oil (AWD models)
- Coupling oil (AWD models)

Essential:

- Replace brake fluid
- Replace engine oil & oil filter (1)
- Replace In-cabin microfilter
- Replace Intelligent Key battery* (2)
- Tire rotation

Severe use maintenance:

Inspections:

- Brake pads & rotors
- Steering gear & linkage
- Axle & suspension parts
- Propeller shaft (AWD models)
- Drive shaft boots
- Exhaust system

Essential:

- Replace brake fluid
- Replace transfer case oil (AWD models)
- Replace differential gear oil (AWD models)
- Replace coupling oil (AWD models)

(1) If the oil replacement indicator is displayed, change the engine oil and filter within two weeks or less than 500 miles (800 km). After replacing the engine oil, reset the display.

(2) Performed based on the number of service months only.

* Maintenance items and intervals with "*" are recommended by NISSAN for reliable vehicle operation. The owner need not perform such maintenance in order to maintain the emission warranty or manufacturer recall liability. Other maintenance items and intervals are required.

18,750 miles/(30,000 km)/ 30 months

Perform at number of miles, kilometers or months, whichever comes first.

Standard maintenance:

Not applicable. Proceed to next interval.

Severe use maintenance:

Inspections:

- Brake pads & rotors
- Steering gear & linkage
- Axle & suspension parts
- Propeller shaft (AWD models)
- Drive shaft boots
- Exhaust system

Essentials:

- Tire rotation

22,500 miles/(36,000 km)/ 36 months

Perform at number of miles, kilometers or months, whichever comes first.

Standard maintenance:

Inspections:

- Brake lines
- Brake pads & rotors
- Propeller shaft (AWD models)
- Drive shaft boots
- Transfer case oil (AWD models)
- Differential gear oil (AWD models)
- Coupling oil (AWD models)

Essential:

- Replace engine oil & oil filter (1)
- Replace in-cabin microfilter
- Replace Intelligent Key battery* (2)
- Tire rotation

Severe use maintenance:

Inspections:

- Brake pads & rotors
- Steering gear & linkage
- Axle & suspension parts
- Propeller shaft (AWD models)
- Drive shaft boots
- Exhaust system

Essential:

- Replace brake fluid

(1) If the oil replacement indicator is displayed, change the engine oil and filter within two weeks or less than 500 miles (800 km). After replacing the engine oil, reset the display.

(2) Performed based on the number of service months only.

* Maintenance items and intervals with "*" are recommended by NISSAN for reliable vehicle operation. The owner need not perform such maintenance in order to maintain the emission warranty or manufacturer recall liability. Other maintenance items and intervals are required.

26,250 miles/(42,000 km)/ 42 months

Perform at number of miles, kilometers or months, whichever comes first.

Standard maintenance:

Not applicable. Proceed to next interval.

Severe use maintenance:

Inspections:

- Brake pads & rotors
- Steering gear & linkage
- Axle & suspension parts
- Propeller shaft (AWD models)
- Drive shaft boots
- Exhaust system

Essentials:

- Tire rotation

30,000 miles/(48,000 km)/ 48 months

Perform at number of miles, kilometers or months, whichever comes first.

Standard maintenance:

Inspections:

- Brake lines
- Brake pads & rotors
- Engine drive belts* (1)
- Fuel tank vapor vent system*
- Exhaust system
- Propeller shaft (AWD models)
- Drive shaft boots
- Steering gear & linkage
- Axle & suspension parts
- Transfer case oil (AWD models)
- Differential gear oil (AWD models)
- Coupling oil (AWD models)

Essential:

- Replace air cleaner filter (2)
- Replace brake fluid
- Replace engine oil & oil filter (3)
- Replace In-cabin microfilter
- Replace Intelligent Key battery* (4)
- Tire rotation

Severe use maintenance:

Inspections:

- Brake pads & rotors
- Steering gear & linkage
- Axle & suspension parts
- Propeller shaft (AWD models)
- Drive shaft boots
- Exhaust system

Essential:

- Replace brake fluid
- Replace transfer case oil (AWD models)
- Replace differential gear oil (AWD models)
- Replace coupling oil (AWD models)

(1) Replace the drive belts if found damaged.

(2) If operating mainly in dusty conditions, more frequent maintenance may be required.

(3) If the oil replacement indicator is displayed, change the engine oil and filter within two weeks or less than 500 miles (800 km). After replacing the engine oil, reset the display.

(4) Performed based on the number of service months only.

* Maintenance items and intervals with "*" are recommended by NISSAN for reliable vehicle operation. The owner need not perform such maintenance in order to maintain the emission warranty or manufacturer recall liability. Other maintenance items and intervals are required.

33,750 miles/(54,000 km)/ 54 months

Perform at number of miles, kilometers or months, whichever comes first.

Standard maintenance:

Not applicable. Proceed to the next interval.

Severe use maintenance:

Inspections:

- Brake pads & rotors
- Steering gear & linkage
- Axle & suspension parts
- Propeller shaft (AWD models)
- Drive shaft boots
- Exhaust system

Essentials:

- Tire rotation

37,500 miles/(60,000 km)/ 60 months

Perform at number of miles, kilometers or months, whichever comes first.

Standard maintenance:

Inspection:

- Brake lines
- Brake pads & rotors
- Engine drive belts* (1)
- Propeller shaft (AWD models)
- Drive shaft boots
- Transfer case oil (AWD models)
- Differential gear oil (AWD models)
- Coupling oil (AWD models)

Essential:

- Replace engine oil & oil filter (2)
- Replace In-cabin microfilter
- Replace Intelligent Key battery* (3)
- Tire rotation

Severe use maintenance:

Inspections:

- Brake pads & rotors
- Steering gear & linkage
- Axle & suspension parts
- Propeller shaft (AWD models)
- Drive shaft boots
- Exhaust system

Essential:

- Replace brake fluid

(1) Replace the drive belts if found damaged.

(2) If the oil replacement indicator is displayed, change the engine oil and filter within two weeks or less than 500 miles (800 km). After replacing the engine oil, reset the display.

(3) Performed based on the number of service months only.

* Maintenance items and intervals with "*" are recommended by NISSAN for reliable vehicle operation. The owner need not perform such maintenance in order to maintain the emission warranty or manufacturer recall liability. Other maintenance items and intervals are required.

41,250 miles/(66,000 km)/ 66 months

Perform at number of miles, kilometers or months, whichever comes first.

Standard maintenance:

Not applicable. Proceed to next interval.

Severe use maintenance:

Inspections:

- Brake pads & rotors
- Steering gear & linkage
- Axle & suspension parts
- Propeller shaft (AWD models)
- Drive shaft boots
- Exhaust system

Essentials:

- Tire rotation

45,000 miles/(72,000 km)/ 72 months

Perform at number of miles, kilometers or months, whichever comes first.

Standard maintenance:

Inspections:
- Brake lines
- Brake pads & rotors
- Engine drive belts* (1)
- Fuel tank vapor vent system*
- Exhaust system
- Propeller shaft (AWD models)
- Drive shaft boots
- Steering gear & linkage
- Axle & suspension parts
- Transfer case oil (AWD models)
- Differential gear oil (AWD models)
- Coupling oil (AWD models)

Essential:
- Replace brake fluid
- Replace engine oil & oil filter (2)
- Replace in-cabin microfilter
- Replace Intelligent Key battery* (3)
- Tire rotation

Severe use maintenance:

Inspections:
- Brake pads & rotors
- Steering gear & linkage
- Axle & suspension parts
- Propeller shaft (AWD models)
- Drive shaft boots
- Exhaust system

Essential:
- Replace brake fluid
- Replace transfer case oil (AWD models)
- Replace differential gear oil (AWD models)
- Replace coupling oil (AWD models)

(1) Replace the drive belts if found damaged.

(2) If the oil replacement indicator is displayed, change the engine oil and filter within two weeks or less than 500 miles (800 km). After replacing the engine oil, reset the display.

(3) Performed based on the number of service months only.

* Maintenance items and intervals with "*" are recommended by NISSAN for reliable vehicle operation. The owner need not perform such maintenance in order to maintain the emission warranty or manufacturer recall liability. Other maintenance items and intervals are required.

48,750 miles/(78,000 km)/ 78 months

Perform at number of miles, kilometers or months, whichever comes first.

Standard maintenance:

Not applicable. Proceed to next interval.

Severe use maintenance:

Inspections:

- Brake pads & rotors
- Steering gear & linkage
- Axle & suspension parts
- Propeller shaft (AWD models)
- Drive shaft boots
- Exhaust system

Essentials:

- Tire rotation

52,500 miles/(84,000 km)/ 84 months

Perform at number of miles, kilometers or months, whichever comes first.

Standard maintenance:

Inspections:

- Brake lines
- Brake pads & rotors
- Engine drive belts* (1)
- Propeller shaft (AWD models)
- Drive shaft boots
- Transfer case oil (AWD models)
- Differential gear oil (AWD models)
- Coupling oil (AWD models)

Essential:

- Replace engine oil & oil filter (2)
- Replace In-cabin microfilter
- Replace Intelligent Key battery* (3)
- Tire rotation

Severe use maintenance:

Inspections:

- Brake pads & rotors
- Steering gear & linkage
- Axle & suspension parts
- Propeller shaft (AWD models)
- Drive shaft boots
- Exhaust system

Essential:

- Replace brake fluid

(1) Replace the drive belts if found damaged.

(2) If the oil replacement indicator is displayed, change the engine oil and filter within two weeks or less than 500 miles (800 km). After replacing the engine oil, reset the display.

(3) Performed based on the number of service months only.

* Maintenance items and intervals with "*" are recommended by NISSAN for reliable vehicle operation. The owner need not perform such maintenance in order to maintain the emission warranty or manufacturer recall liability. Other maintenance items and intervals are required.

56,250 miles/(90,000 km)/ 90 months

Perform at number of miles, kilometers or months, whichever comes first.

Standard maintenance:

Not applicable. Proceed to the next interval.

Severe use maintenance:

Inspections:

- Brake pads & rotors
- Steering gear & linkage
- Axle & suspension parts
- Propeller shaft (AWD models)
- Drive shaft boots
- Exhaust system

Essential:

- Tire rotation

60,000 miles/(96,000 km)/ 96 months

Perform at number of miles, kilometers or months, whichever comes first.

Standard maintenance:

Inspections:

- Brake lines
- Brake pads & rotors
- Engine drive belts* (1)
- Fuel tank vapor vent system*
- Exhaust system
- Propeller shaft (AWD models)
- Drive shaft boots
- Steering gear & linkage
- Axle & suspension parts
- Transfer case oil (AWD models)
- Differential gear oil (AWD models)
- Coupling oil (AWD models)

Essential:

- Replace air cleaner filter (2)
- Replace brake fluid
- Replace engine oil & oil filter (3)
- Replace In-cabin microfilter
- Replace Intelligent Key battery* (4)
- Tire rotation

Severe use maintenance:

Inspections:

- Brake pads & rotors
- Steering gear & linkage
- Axle & suspension parts
- Propeller shaft (AWD models)
- Drive shaft boots
- Exhaust system

Essential:

- Replace brake fluid
- Replace transfer case oil (AWD models)
- Replace differential gear oil (AWD models)
- Replace coupling oil (AWD models)

(1) Replace the drive belts if found damaged.

(2) If operating mainly in dusty conditions, more frequent maintenance may be required.

(3) If the oil replacement indicator is displayed, change the engine oil and filter within two weeks or less than 500 miles (800 km). After replacing the engine oil, reset the display.

(4) Performed based on the number of service months only.

* Maintenance items and intervals with "*" are recommended by NISSAN for reliable vehicle operation. The owner need not perform such maintenance in order to maintain the emission warranty or manufacturer recall liability. Other maintenance items and intervals are required.

63,750 miles/(102,000 km)/ 102 months

Perform at number of miles, kilometers or months, whichever comes first.

Standard maintenance:

Not applicable. Proceed to next interval.

Severe use maintenance:

Inspections:

- Brake pads & rotors
- Steering gear & linkage
- Axle & suspension parts
- Propeller shaft (AWD models)
- Drive shaft boots
- Exhaust system

Essentials:

- Tire rotation

67,500 miles/(108,000 km)/ 108 months

Perform at number of miles, kilometers or months, whichever comes first.

Standard maintenance:

Inspections:

- Brake lines
- Brake pads & rotors
- Engine drive belts* (1)
- Propeller shaft (AWD models)
- Drive shaft boots
- Transfer case oil (AWD models)
- Differential gear oil (AWD models)
- Coupling oil (AWD models)

Essential:

- Replace engine oil & oil filter (2)
- Replace in-cabin microfilter
- Replace Intelligent Key battery* (3)
- Tire rotation

Severe use maintenance:

Inspections:

- Brake pads & rotors
- Steering gear & linkage
- Axle & suspension parts
- Propeller shaft (AWD models)
- Drive shaft boots
- Exhaust system

Essential:

- Replace brake fluid

(1) Replace the drive belts if found damaged.

(2) If the oil replacement indicator is displayed, change the engine oil and filter within two weeks or less than 500 miles (800 km). After replacing the engine oil, reset the display.

(3) Performed based on the number of service months only.

* Maintenance items and intervals with "*" are recommended by NISSAN for reliable vehicle operation. The owner need not perform such maintenance in order to maintain the emission warranty or manufacturer recall liability. Other maintenance items and intervals are required.

71,250 miles/(114,000 km)/ 114 months

Perform at number of miles, kilometers or months, whichever comes first.

Standard maintenance:

Not applicable. Proceed to next interval.

Severe use maintenance:

Inspections:

- Brake pads & rotors
- Steering gear & linkage
- Axle & suspension parts
- Propeller shaft (AWD models)
- Drive shaft boots
- Exhaust system

Essentials:

- Tire rotation

75,000 miles/(120,000 km)/ 120 months

Perform at number of miles, kilometers or months, whichever comes first.

Standard maintenance:

Inspections:

- Brake lines
- Brake pads & rotors
- Engine drive belts* (1)
- Fuel tank vapor vent system*
- Exhaust system
- Propeller shaft (AWD models)
- Drive shaft boots
- Steering gear & linkage
- Axle & suspension parts
- Transfer case oil (AWD models)
- Differential gear oil (AWD models)
- Coupling oil (AWD models)

Essential:

- Replace brake fluid
- Replace engine oil & oil filter (2)
- Replace In-cabin microfilter
- Replace Intelligent Key battery* (3)
- Tire rotation

Severe use maintenance:

Inspections:

- Brake pads & rotors
- Steering gear & linkage
- Axle & suspension parts
- Propeller shaft (AWD models)
- Drive shaft boots
- Exhaust system

Essential:

- Replace brake fluid
- Replace transfer case oil (AWD models)
- Replace differential gear oil (AWD models)
- Replace coupling oil (AWD models)

(1) Replace the drive belts if found damaged.

(2) If the oil replacement indicator is displayed, change the engine oil and filter within two weeks or less than 500 miles (800 km). After replacing the engine oil, reset the display.

(3) Performed based on the number of service months only.

* Maintenance items and intervals with "*" are recommended by NISSAN for reliable vehicle operation. The owner need not perform such maintenance in order to maintain the emission warranty or manufacturer recall liability. Other maintenance items and intervals are required.

78,750 miles/(126,000 km)/ 126 months

Perform at number of miles, kilometers or months, whichever comes first.

Standard maintenance:

Not applicable. Proceed to the next interval.

Severe use maintenance:

Inspections:

- Brake pads & rotors
- Steering gear & linkage
- Axle & suspension parts
- Propeller shaft (AWD models)
- Drive shaft boots
- Exhaust system

Essential:

- Tire rotation

82,500 miles/(132,000 km)/ 132 months

Perform at number of miles, kilometers or months, whichever comes first.

Standard maintenance:

Inspections:

- Brake lines
- Brake pads & rotors
- Engine drive belts* (1)
- Propeller shaft (AWD models)
- Drive shaft boots
- Transfer case oil (AWD models)
- Differential gear oil (AWD models)
- Coupling oil (AWD models)

Essential:

- Replace engine oil & oil filter (2)
- Replace In-cabin microfilter
- Replace Intelligent Key battery* (3)
- Tire rotation

Severe use maintenance:

Inspections:

- Brake pads & rotors
- Steering gear & linkage
- Axle & suspension parts
- Propeller shaft (AWD models)
- Drive shaft boots
- Exhaust system

Essential:

- Replace brake fluid

(1) Replace the drive belts if found damaged.

(2) If the oil replacement indicator is displayed, change the engine oil and filter within two weeks or less than 500 miles (800 km). After replacing the engine oil, reset the display.

(3) Performed based on the number of service months only.

* Maintenance items and intervals with "*" are recommended by NISSAN for reliable vehicle operation. The owner need not perform such maintenance in order to maintain the emission warranty or manufacturer recall liability. Other maintenance items and intervals are required.

86,250 miles/(138,000 km)/ 138 months

Perform at number of miles, kilometers or months, whichever comes first.

Standard maintenance:

Not applicable. Proceed to next interval.

Severe use maintenance:

Inspections:

- Brake pads & rotors
- Steering gear & linkage
- Axle & suspension parts
- Propeller shaft (AWD models)
- Drive shaft boots
- Exhaust system

Essentials:

- Tire rotation

90,000 miles/(144,000 km)/ 144 months

Perform at number of miles, kilometers or months, whichever comes first.

Standard maintenance:

Inspections:
- Brake lines
- Brake pads & rotors
- Engine drive belts* (1)
- Fuel tank vapor vent system*
- Exhaust system
- Propeller shaft (AWD models)
- Drive shaft boots
- Steering gear & linkage
- Axle & suspension parts
- Transfer case oil (AWD models)
- Differential gear oil (AWD models)
- Coupling oil (AWD models)

Essential:
- Replace air cleaner filter (2)
- Replace automatic transmission fluid
- Replace brake fluid
- Replace engine oil & oil filter (3)
- Replace in-cabin microfilter
- Replace Intelligent Key battery* (4)
- Tire rotation

Severe use maintenance:

Inspections:
- Brake pads & rotors
- Steering gear & linkage
- Axle & suspension parts
- Propeller shaft (AWD models)
- Drive shaft boots
- Exhaust system

Essential:
- Replace brake fluid
- Replace transfer case oil (AWD models)
- Replace differential gear oil (AWD models)
- Replace coupling oil (AWD models)

(1) Replace the drive belts if found damaged.

(2) If operating mainly in dusty conditions, more frequent maintenance may be required.

(3) If the oil replacement indicator is displayed, change the engine oil and filter within two weeks or less than 500 miles (800 km). After replacing the engine oil, reset the display.

(4) Performed based on the number of service months only.

* Maintenance items and intervals with "*" are recommended by NISSAN for reliable vehicle operation. The owner need not perform such maintenance in order to maintain the emission warranty or manufacturer recall liability. Other maintenance items and intervals are required.

93,750 miles/(150,000 km)/ 150 months

Perform at number of miles, kilometers or months, whichever comes first.

Standard maintenance:

Not applicable. Proceed to next interval.

Severe use maintenance:

Inspections:

- Brake pads & rotors
- Steering gear & linkage
- Axle & suspension parts
- Propeller shaft (AWD models)
- Drive shaft boots
- Exhaust system

Essentials:

- Tire rotation

97,500 miles/(156,000 km)/ 156 months

Perform at number of miles, kilometers or months, whichever comes first.

Standard maintenance:

Inspections:

- Brake lines
- Brake pads & rotors
- Engine drive belts* (1)
- Propeller shaft (AWD models)
- Drive shaft boots
- Transfer case oil (AWD models)
- Differential gear oil (AWD models)
- Coupling oil (AWD models)

Essential:

- Replace engine oil & oil filter (2)
- Replace In-cabin microfilter
- Replace Intelligent Key battery* (3)
- Tire rotation

Severe use maintenance:

Inspections:

- Brake pads & rotors
- Steering gear & linkage
- Axle & suspension parts
- Propeller shaft (AWD models)
- Drive shaft boots
- Exhaust system

Essential:

- Replace brake fluid

(1) Replace the drive belts if found damaged.

(2) If the oil replacement indicator is displayed, change the engine oil and filter within two weeks or less than 500 miles (800 km). After replacing the engine oil, reset the display.

(3) Performed based on the number of service months only.

* Maintenance items and intervals with "*" are recommended by NISSAN for reliable vehicle operation. The owner need not perform such maintenance in order to maintain the emission warranty or manufacturer recall liability. Other maintenance items and intervals are required.

101,250 miles/(162,000 km)/ 162 months

Perform at number of miles, kilometers or months, whichever comes first.

Standard maintenance:

Not applicable. Proceed to the next interval.

Severe use maintenance:

Inspections:
- Brake pads & rotors
- Steering gear & linkage
- Axle & suspension parts
- Propeller shaft (AWD models)
- Drive shaft boots
- Exhaust system

Essential:
- Tire rotation

105,000 miles/(168,000 km)/ 168 months

Perform at number of miles, kilometers or months, whichever comes first.

Standard maintenance:

Inspections:
- Brake lines
- Brake pads & rotors
- Engine drive belts* (1)
- Fuel tank vapor vent system*
- Exhaust system
- Propeller shaft (AWD models)
- Drive shaft boots
- Steering gear & linkage
- Axle & suspension parts
- Transfer case oil (AWD models)
- Differential gear oil (AWD models)
- Coupling oil (AWD models)

Essential:
- Replace brake fluid
- Replace engine oil & oil filter (2)
- Replace spark plugs
- Replace In-cabin microfilter
- Replace Intelligent Key battery* (3)
- Tire rotation
- Replace engine coolant* (4)

Severe use maintenance:

Inspections:
- Brake pads & rotors
- Steering gear & linkage
- Axle & suspension parts
- Propeller shaft (AWD models)
- Drive shaft boots
- Exhaust system

Essential:
- Replace brake fluid
- Replace transfer case oil (AWD models)
- Replace differential gear oil (AWD models)
- Replace coupling oil (AWD models)

(1) Replace the drive belts if found damaged.

(2) If the oil replacement indicator is displayed, change the engine oil and filter within two weeks or less than 500 miles (800 km). After replacing the engine oil, reset the display.

(3) Performed based on the number of service months only.

(4) First replacement interval is 105,000 miles (168,000 km) or 168 months. After first replacement, replace every 75,000 miles (120,000 km) or 60 months.

* Maintenance items and intervals with "*" are recommended by NISSAN for reliable vehicle operation. The owner need not perform such maintenance in order to maintain the emission warranty or manufacturer recall liability. Other maintenance items and intervals are required.

108,750 miles/(174,000 km)/ 174 months

Perform at number of miles, kilometers or months, whichever comes first.

Standard maintenance:

Not applicable. Proceed to next interval.

Severe use maintenance:

Inspections:

- Brake pads & rotors
- Steering gear & linkage
- Axle & suspension parts
- Propeller shaft (AWD models)
- Drive shaft boots
- Exhaust system

Essentials:

- Tire rotation

112,500 miles/(180,000 km)/ 180 months

Perform at number of miles, kilometers or months, whichever comes first.

Standard maintenance:

Inspections:

- Brake lines
- Brake pads & rotors
- Engine drive belts* (1)
- Propeller shaft (AWD models)
- Drive shaft boots
- Transfer case oil (AWD models)
- Differential gear oil (AWD models)
- Coupling oil (AWD models)

Essential:

- Replace engine oil & oil filter (2)
- Replace in-cabin microfilter
- Replace Intelligent Key battery* (3)
- Tire rotation

Severe use maintenance:

Inspections:

- Brake pads & rotors
- Steering gear & linkage
- Axle & suspension parts
- Propeller shaft (AWD models)
- Drive shaft boots
- Exhaust system

Essential:

- Replace brake fluid

(1) Replace the drive belts if found damaged.

(2) If the oil replacement indicator is displayed, change the engine oil and filter within two weeks or less than 500 miles (800 km). After replacing the engine oil, reset the display.

(3) Performed based on the number of service months only.

* Maintenance items and intervals with "*" are recommended by NISSAN for reliable vehicle operation. The owner need not perform such maintenance in order to maintain the emission warranty or manufacturer recall liability. Other maintenance items and intervals are required.

116,250 miles/(186,000 km)/ 186 months

Perform at number of miles, kilometers or months, whichever comes first.

Standard maintenance:

Not applicable. Proceed to next interval.

Severe use maintenance:

Inspections:

- Brake pads & rotors
- Steering gear & linkage
- Axle & suspension parts
- Propeller shaft (AWD models)
- Drive shaft boots
- Exhaust system

Essentials:

- Tire rotation

120,000 miles/(192,000 km)/ 192 months

Perform at number of miles, kilometers or months, whichever comes first.

Standard maintenance:

Inspections:

- Brake lines
- Brake pads & rotors
- Engine drive belts* (1)
- Fuel tank vapor vent system*
- Exhaust system
- Propeller shaft (AWD models)
- Drive shaft boots
- Steering gear & linkage
- Axle & suspension parts
- Transfer case oil (AWD models)
- Differential gear oil (AWD models)
- Coupling oil (AWD models)

Essential:

- Replace air cleaner filter (2)
- Replace brake fluid
- Replace engine oil & oil filter (3)
- Replace Intelligent Key battery* (4)
- Tire rotation

Severe use maintenance:

Inspections:

- Brake pads & rotors
- Steering gear & linkage
- Axle & suspension parts
- Propeller shaft (AWD models)
- Drive shaft boots
- Exhaust system

Essential:

- Replace brake fluid
- Replace transfer case oil (AWD models)
- Replace differential gear oil (AWD models)
- Replace coupling oil (AWD models)

(1) Replace the drive belts if found damaged.

(2) If operating mainly in dusty conditions, more frequent maintenance may be required.

(3) If the oil replacement indicator is displayed, change the engine oil and filter within two weeks or less than 500 miles (800 km). After replacing the engine oil, reset the display.

(4) Performed based on the number of service months only.

* Maintenance items and intervals with "*" are recommended by NISSAN for reliable vehicle operation. The owner need not perform such maintenance in order to maintain the emission warranty or manufacturer recall liability. Other maintenance items and intervals are required.

MEMO

10 Technical and consumer information

Recommended fluids/lubricants and capacities . . . 557
- Basic information . . . 557
- Fuel . . . 557
- Engine oil drain and refill . . . 557
- Engine coolant with reservoir . . . 557
- Automatic transmission fluid (ATF) . . . 557
- Differential gear oil . . . 557
- Coupling oil . . . 557
- Transfer case oil . . . 557
- Brake fluid . . . 557
- Multi-purpose grease . . . 558
- Air conditioning system refrigerant . . . 558
- Air conditioning system oil . . . 558
- Windshield-washer fluid . . . 558
- Fuel recommendation . . . 558
- Engine oil and oil filter recommendations . . . 561
- Air conditioner system refrigerant and oil recommendations . . . 562

Specifications . . . 563
- Engine . . . 563
- Wheels and tires . . . 563
- Dimensions and weights . . . 563

When traveling or registering in another country . . . 564

Vehicle identification . . . 564
- Vehicle Identification Number (VIN) plate . . . 564
- Vehicle identification number (chassis number) . . . 565
- Engine serial number . . . 565
- F.M.V.S.S./C.M.V.S.S. certification label . . . 566
- Emission control information label . . . 566
- Tire and Loading Information label . . . 566
- Air conditioner specification label . . . 567

Installing front license plate . . . 567

Vehicle loading information . . . 568
- Basic information . . . 568
- Terms . . . 568
- Vehicle load capacity . . . 568
- Securing the load . . . 570
- Loading tips . . . 571
- Measurement of weights . . . 572

Towing a trailer . . . 572
- Basic information . . . 572
- Maximum load limits . . . 572
- Towing load/specification . . . 576
- Towing safety . . . 576

Flat towing your vehicle 581
Flat towing for all–wheel drive vehicle (if so equipped) 581
Flat towing for front wheel drive vehicle (if so equipped) 581
Automatic transmission 582
Uniform tire quality grading 582
Reporting safety defects 583
Readiness for Inspection/Maintenance (I/M) test 584
Emission control system warranty 585
Event Data Recorders (EDR) 585
Basic information 585
Additional data recording (on vehicles equipped with optional ProPILOT Assist) 586
Owner's Manual/Service Manual order information 587

BASIC INFORMATION

The following are approximate capacities. The actual refill capacities may be slightly different. When refilling, follow the procedure described in the "Do-it-yourself" section to determine the proper refill capacity.

FUEL

For additional information, see "Fuel recommendation" (P. 558).

- Capacity (approximate)
  - Metric Measure: 70.8 L
  - US Measure: 18-3/4 gal
  - Imperial Measure: 15-5/8 gal

ENGINE OIL DRAIN AND REFILL

For additional information, see "Engine oil" (P. 490).

- Genuine "NISSAN Motor Oil 0W-20 SP" (or equivalent) is recommended.
- If the above motor oil (or engine oil) is not available, a synthetic 0W-20 SP GF-6A motor oil (or engine oil) may be used. Damage caused by the use of motor oil (or engine oil) other than as recommended is not covered under NISSAN's New Vehicle Limited Warranty. For additional information, see "Engine oil and oil filter recommendations" (P. 561).

With oil filter change

- Capacity (approximate)
  - Metric Measure: 4.7 L
  - US Measure: 5 qt
  - Imperial Measure: 4-1/8 qt

Without oil filter change

- Capacity (approximate) without oil filter change
  - Metric Measure: 4.4 L
  - US Measure: 4-5/8 qt
  - Imperial Measure: 3–7/8 qt

ENGINE COOLANT WITH RESERVOIR

- Pre-diluted Genuine NISSAN Long Life Antifreeze/Coolant (blue) or equivalent
- Capacity (approximate)
  - Metric Measure: 9.19 L
  - US Measure: 2-3/8 gal
  - Imperial Measure: 2 gal

AUTOMATIC TRANSMISSION FLUID (ATF)

- Genuine NISSAN Matic R ATF or equivalent.
- NISSAN recommends using Genuine NISSAN Matic R ATF (or equivalent) ONLY in NISSAN automatic transmissions. Do not mix with other fluids. Using fluids that are not equivalent to Genuine NISSAN Matic R ATF may damage the automatic transmission. Damage caused by the use of fluids other than as recommended is not covered under NISSAN's New Vehicle Limited Warranty.

DIFFERENTIAL GEAR OIL

- Genuine NISSAN Differential Oil Hypoid Super Semi-synthetic API GL-5. Viscosity SAE 75W-90.
- The use of differential gear oil other than the specified may cause vehicle malfunctions and result in repairs that are not covered by the vehicle's warranty.

COUPLING OIL

- Genuine NISSAN LSC Coupling Transmission Fluid 12-301 or equivalent.

TRANSFER CASE OIL

- Genuine NISSAN Differential Oil Hypoid Super-S GL-5 synthetic 75W-90 or equivalent.

BRAKE FLUID

- Genuine NISSAN Super Heavy Duty Brake Fluid or equivalent DOT 3.
- Available in mainland U.S.A. through a NISSAN dealer.

MULTI-PURPOSE GREASE

- NLGI No. 2 (Lithium Soap base).

AIR CONDITIONING SYSTEM REFRIGERANT

- HFO1234yf (R1234yf).
- For additional information, see "Air conditioner system refrigerant and oil recommendations" (P. 562).

AIR CONDITIONING SYSTEM OIL

- NISSAN A/C System Oil Type VC100YF (PAG) or equivalent.
- For additional information, see "Air conditioner system refrigerant and oil recommendations" (P. 562).

WINDSHIELD-WASHER FLUID

- Genuine NISSAN Windshield Washer Concentrate Cleaner & Antifreeze fluid or equivalent
- Capacity (approximate)
  - Metric Measure: 4.8 L
  - US Measure: 1-1/4 gal
  - Imperial Measure: 1 gal

FUEL RECOMMENDATION

Basic information

Use unleaded regular gasoline with an octane rating of at least 87 AKI (Anti-Knock Index) number (Research octane number 91).

⚠ CAUTION

- **Only vehicles with the E-85 filler door label can operate on E-85. Fuel system or other damage can occur if E-85 is used in vehicles that are not designed to run on E-85.**
- **Using a fuel other than that specified could adversely affect the emission control system, and may also affect the warranty coverage.**
- **Under no circumstances should a leaded gasoline be used, because this will damage the three-way catalyst.**
- **Do not use a fuel containing more than 15% ethanol in your vehicle. Your vehicle is not designed to run on a fuel containing more than 15% ethanol. Using a fuel containing more than 15% ethanol in a vehicle not specifically designed for a fuel containing more than 15% ethanol can adversely affect the emission control devices and systems of the vehicle. Damage caused by such fuel is not covered by the NISSAN New Vehicle Limited Warranty.**
- **Do not use fuel that contains the octane booster methylcyclopentadienyl manganese tricarbonyl (MMT). Using fuel containing MMT may adversely affect vehicle performance and vehicle emissions. Not all fuel dispensers are labeled to indicate MMT content, so you may have to consult your gasoline retailer for more details. Note that Federal and California laws prohibit the use of MMT in reformulated gasoline.**
- **U.S. government regulations require ethanol dispensing pumps to be identified by a small, square, orange and black label with the common abbreviation or the appropriate percentage for that region.**

Gasoline specifications

NISSAN recommends using gasoline that meets the World-Wide Fuel Charter (WWFC) specifications where it is available. Many of the automobile manufacturers developed this specification to improve emission control system and vehicle performance. Ask your service station manager if the gasoline meets the WWFC specifications.

Reformulated gasoline

Some fuel suppliers are now producing reformulated gasolines. These gasolines are specially designed to reduce vehicle emissions. NISSAN supports efforts towards cleaner air and suggests that you use reformulated gasoline when available.

Gasoline containing oxygenates

Some fuel suppliers sell gasoline containing oxygenates such as ethanol, Methyl Tert-butyl Ether (MTBE) and methanol with or without advertising their presence. NISSAN does not recommend the use of fuels of which the oxygenate content and the fuel compatibility for your NISSAN cannot be readily determined. If in doubt, ask your service station manager.

If you use oxygenate-blend gasoline, please take the following precautions as the usage of such fuels may cause vehicle performance problems and/or fuel system damage.

- **The fuel should be unleaded and have an octane rating no lower than that recommended for unleaded gasoline.**
- **If an oxygenate-blend other than methanol blend is used, it should contain no more than 15% oxygenate.**
- **If a methanol blend is used, it should contain no more than 5% methanol (methyl alcohol, wood alcohol). It should also contain a suitable amount of appropriate cosolvents and corrosion inhibitors. If not properly formulated with appropriate cosolvents and corrosion inhibitors, such methanol blends may cause fuel system damage and/or vehicle performance problems. At this time, sufficient data is not available to ensure that all methanol blends are suitable for use in NISSAN vehicles.**

If any driveability problems such as engine stalling and difficult hot-starting are experienced after using oxygenate-blend fuels, immediately change to a non-oxygenate fuel or a fuel with a low blend of MTBE.

Take care not to spill gasoline during refueling. Gasoline containing oxygenates can cause paint damage.

E–15 fuel

E-15 fuel is a mixture of approximately 15% fuel ethanol and 85% unleaded gasoline. E-15 can only be used in vehicles designed to run on E-15 fuel. U.S. government regulations require fuel ethanol dispensing pumps to be identified with small, square, orange and black label with the common abbreviation or the appropriate percentage for that region.

E–85 fuel

E-85 fuel is a mixture of approximately 85% fuel ethanol and 15% unleaded gasoline. E-85 can only be used in a Flexible Fuel Vehicle (FFV). Do not use E-85 in your vehicle. U.S. government regulations require fuel ethanol dispensing pumps to be identified by a small, square, orange and black label with the common abbreviation or the appropriate percentage for that region.

Fuel containing MMT

MMT, or methylcyclopentadienyl manganese tricarbonyl, is an octane boosting additive. NISSAN does not recommend the use of fuel containing MMT. Such fuel may adversely affect vehicle performance, including the emissions control system. Note that while some fuel pumps label MMT content, not all do, so you may have to consult your gasoline retailer for more details.

Aftermarket fuel additives

NISSAN does not recommend the use of any aftermarket fuel additives (for example, fuel injector cleaner, octane booster, intake valve deposit removers, etc.) which are sold commercially. Many of these additives intended for gum, varnish or deposit removal may contain active solvents or similar ingredients that can be harmful to the fuel system and engine.

Octane rating tips

Using unleaded gasoline with an octane rating lower than recommended can cause persistent, heavy "spark knock." ("Spark knock" is a metallic rapping noise.) If severe, this can lead to engine damage. If you detect a persistent heavy spark knock even when using gasoline of the stated octane rating, or if you hear steady spark knock while holding a steady speed on level roads, it is recommended that you have a NISSAN dealer correct the condition. Failure to correct the condition is misuse of the vehicle, for which NISSAN is not responsible.

Incorrect ignition timing may result in spark knock, after-run and/or overheating, which may cause excessive fuel consumption or engine damage. If any of the above symptoms are encountered, have your vehicle checked. It is recommended that you visit a NISSAN dealer for servicing.

However, now and then you may notice light spark knock for a short time while accelerating or driving up hills. This is not a cause for concern, because you get the greatest fuel benefit when there is light spark knock for a short time under heavy engine load.

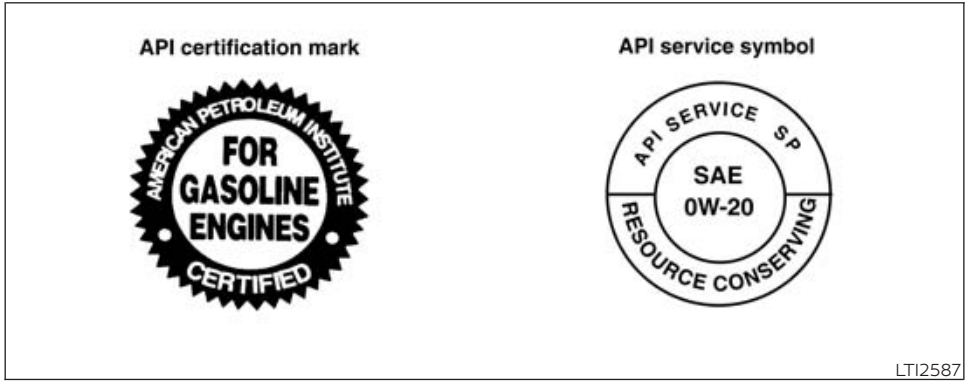

ENGINE OIL AND OIL FILTER RECOMMENDATIONS

Selecting the correct oil

It is essential to choose the correct grade, quality and viscosity engine oil to ensure satisfactory engine life and performance. For additional information, see "Recommended fluids/lubricants and capacities" (P. 557). NISSAN recommends the use of an energy conserving oil in order to improve fuel economy.

Select only engine oils that meet the American Petroleum Institute (API) certification or International Lubricant Standardization and Approval Committee (ILSAC) certification and SAE viscosity standard. These oils have the API certification mark on the front of the container. Oils which do not have the specified quality label should not be used as they could cause engine damage.

Oil additives

NISSAN does not recommend the use of oil additives. The use of an oil additive is not necessary when the proper oil type is used and maintenance intervals are followed.

Oil which may contain foreign matter or has been previously used should not be used.

Oil viscosity

The engine oil viscosity or thickness changes with temperature. Because of this, it is important to select the engine oil viscosity based on the temperatures at which the vehicle will be operated before the next oil change. Choosing an oil viscosity other than that recommended could cause serious engine damage.

Selecting the correct oil filter

Your new NISSAN vehicle is equipped with a high-quality Genuine NISSAN oil filter. When replacing, use a Genuine NISSAN oil filter or its equivalent for the reason described in "Change intervals."

Change intervals

The oil and oil filter change intervals for your engine are based on the use of the specified quality oils and filters. Using engine oil and filters that are not of the specified quality, or exceeding recommended oil and filter change intervals could reduce engine life. Damage to the engine caused by improper maintenance or use of incorrect oil and filter quality and/or viscosity is not covered by the NISSAN New Vehicle Limited Warranty.

Your engine was filled with a high-quality engine oil when it was built. You do not have to change the oil before the first recommended change interval. Oil and filter change intervals depend upon how you use your vehicle.

Operation under the following conditions may require more frequent oil and filter changes:

- repeated short distance driving at cold outside temperatures
- driving in dusty conditions
- extensive idling
- towing a trailer
- stop and go commuting

For additional information on maintenance schedules, refer to the "Maintenance and schedules" section of this manual.

AIR CONDITIONER SYSTEM REFRIGERANT AND OIL RECOMMENDATIONS

The air conditioner system in your NISSAN vehicle must be charged with the refrigerant HFO-1234yf (R-1234yf) and NISSAN A/C system oil Type VC100YF (PAG) or the exact equivalents.

⚠ CAUTION

The use of any other refrigerant or oil will cause severe damage to the air conditioning system and will require the replacement of all air conditioner system components.

The refrigerant HFO-1234yf (R-1234yf) in your NISSAN vehicle does not harm the earth's ozone layer. Although this refrigerant does not affect the earth's atmosphere, certain government regulations require the recovery and recycling of any refrigerant during automotive air conditioner system service. Air conditioner system should only be serviced by trained and certified technicians to ensure proper and safe operation (SAE J2845). A NISSAN dealer has the trained technicians and equipment needed to recover and recycle your air conditioner system refrigerant. Only new and SAEJ2842 certified evaporator(s) shall be used as replacement parts.

A damaged or leaking air conditioning evaporator shall never be repaired or replaced with one removed from a used or salvaged vehicle. To replace a damaged or leaking evaporator, use only new and SAE J2842 certified evaporator(s). It is recommended that you visit a NISSAN dealer when servicing your air conditioner system.

ENGINE

- Model
  - 2.0L 4 cylinder (KR20DDET engine model)
- Type
  - Gasoline, 4-cycle, DOHC
- Cylinder arrangement
  - 4-cylinder, inline
- Bore x Stroke

  when compression ratio = 8
  - Metric Measure: 84.0 mm x 90.1 mm
  - US Measure: 3.307 in x 3.547 in

  when compression ratio = 14
  - Metric Measure: 84.0 mm x 88.9 mm
  - US Measure: 3.307 in x 3.500 in
- Displacement

  when compression ratio = 8
  - Metric Measure: 1,997 cm^3
  - US Measure: 121.86 cu in

  when compression ratio = 14
  - Metric Measure: 1,970 cm^3
  - US Measure: 120.22 cu in
- Firing order: 1–3–4–2
- Idle speed
  - No adjustment is necessary.
- A/T in N (Neutral) position
  - No adjustment is necessary.
- Ignition timing (degree B.T.D.C. at idle speed)
  - No adjustment is necessary.
- CO % at idle
  - No adjustment is necessary.
- Spark plug
  - DILKAR7N9HG
- Spark plug gap (Nominal)
  - Metric Measure: 0.9 mm
  - US Measure: 0.035 in
- Camshaft operation
  - Timing chain

This spark ignition system complies with the Canadian standard ICES-002.

WHEELS AND TIRES

Wheels

- Alloy wheel
  - Offset – Metric Measure: 50 mm
  - Offset – US Measure: 1.97 in
  - Size – 20 x 8J
- Alloy wheel
  - Offset – Metric Measure: 50 mm
  - Offset – US Measure: 1.97 in
  - Size – 21 x 8J
- T-type (steel spare)
  - Offset – Metric Measure: 25 mm
  - Offset – US Measure: 0.98 in
  - Size – 18 x 4.5T

Tire size

- All Season
  - 255/55R20
  - 255/50R21

Spare tire (if so equipped)

- Temporary spare
  - T175/90D18

Emergency tire puncture repair kit (if so equipped)

DIMENSIONS AND WEIGHTS

Overall length

- Metric Measure: 4,900.7 mm
- US Measure: 192.9 in

Overall width

- With mirrors closed
  - Metric Measure: 1,982 mm
  - US Measure: 78.0 in
- With mirrors open
  - Metric Measure: 2,228 mm
  - US Measure: 87.7 in

Overall height

- With roof rails
  - Metric Measure: 1,723.5 mm
  - US Measure: 67.9 in

Front and rear track

- Metric Measure: 1,695 mm
- US Measure: 66.7 in

Wheelbase

- Metric Measure: 2,825 mm
- US Measure: 111.2 in

Gross vehicle weight rating

- Refer to the "F.M.V.S.S./C.M.V.S.S. certification label" on the center pillar between the driver's side front and rear doors.

Gross axle weight rating

- Front and rear
  - Refer to the "F.M.V.S.S./C.M.V.S.S. certification label" on the center pillar between the driver's side front and rear doors.

WHEN TRAVELING OR REGISTERING IN ANOTHER COUNTRY

When planning to drive your NISSAN vehicle in another country, you should first find out if the fuel available is suitable for your vehicle's engine.

Using fuel with an octane rating that is too low may cause engine damage. All gasoline vehicles must be operated with unleaded gasoline. Therefore, avoid taking your vehicle to areas where appropriate fuel is not available.

When transferring the registration of your vehicle to another country, state, province or district, it may be necessary to modify the vehicle to meet local laws and regulations.

The laws and regulations for motor vehicle emission control and safety standards vary according to the country, state, province or district; therefore, vehicle specifications may differ.

When any vehicle is to be taken into another country, state, province or district and registered, its modifications, transportation and registration are the responsibility of the user. NISSAN is not responsible for any inconvenience that may result.

VEHICLE IDENTIFICATION

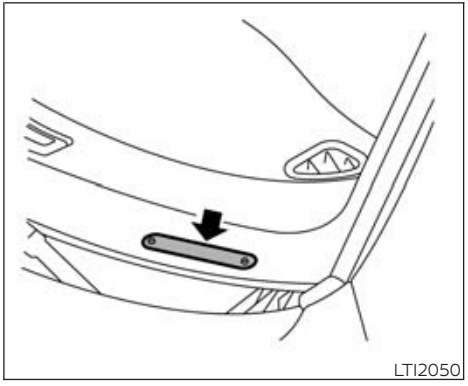

VEHICLE IDENTIFICATION NUMBER (VIN) PLATE

The Vehicle Identification Number (VIN) plate is attached as shown. This number is the identification for your vehicle and is used in the vehicle registration.

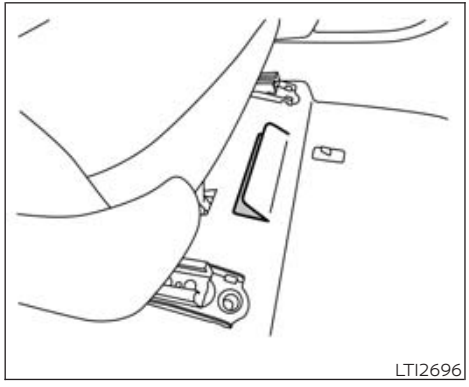

Type A (if so equipped)

VEHICLE IDENTIFICATION NUMBER (chassis number)

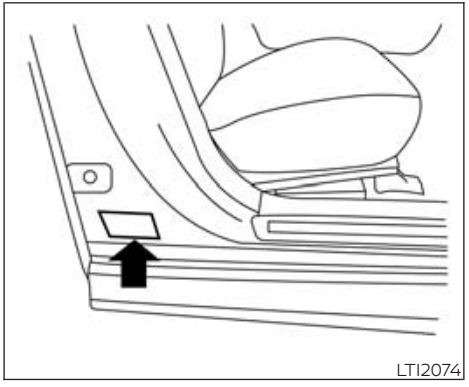

Type B (if so equipped)

The vehicle identification number is located as shown.

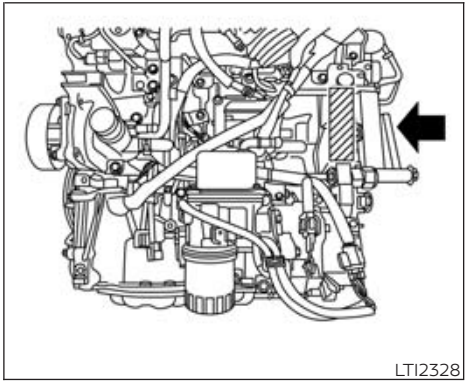

ENGINE SERIAL NUMBER

The number is stamped on the engine as shown.

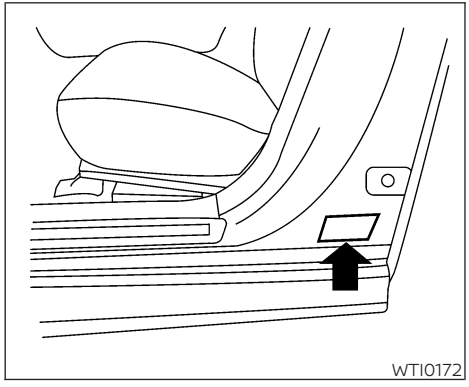

F.M.V.S.S./C.M.V.S.S. CERTIFICATION LABEL

The Federal/Canadian Motor Vehicle Safety Standard (F.M.V.S.S./C.M.V.S.S.) certification label is affixed as shown. This label contains valuable vehicle information, such as: (GVWR), (GAWR), month and year of manufacture, (VIN), etc. Review it carefully.

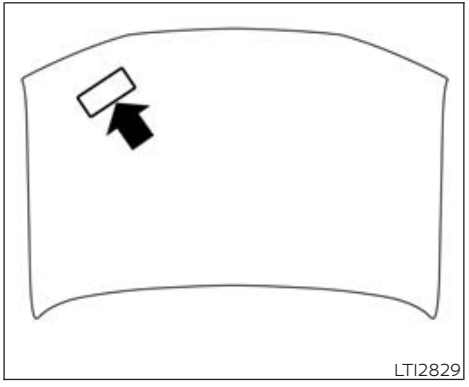

EMISSION CONTROL INFORMATION LABEL

The emission control information label is attached to the underside of the hood as shown.

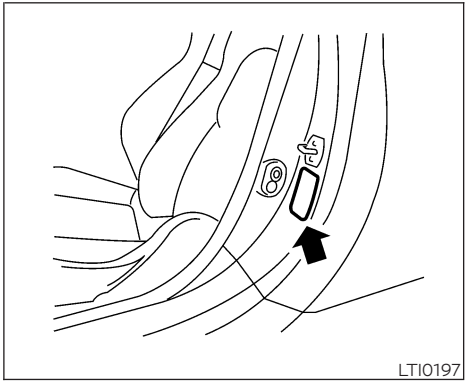

TIRE AND LOADING INFORMATION LABEL

The cold tire pressure is shown on the Tire and Loading Information label. The label is located as shown.

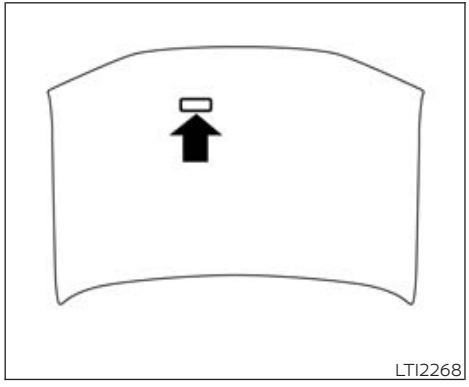

AIR CONDITIONER SPECIFICATION LABEL

The air conditioner specification label is affixed to the underside of the hood as shown.

Air Conditioner Specification Label Symbols

Caution symbol

- Reference
  - ISO 7000 0434

Air Conditioning System symbol (MAC)

- Reference
  - ISO 2575 D01

MAC System Lubricant Type symbol (PAG–POE)

Requires Registered Technician to Service MAC System symbol

Flammable Refrigerant symbol

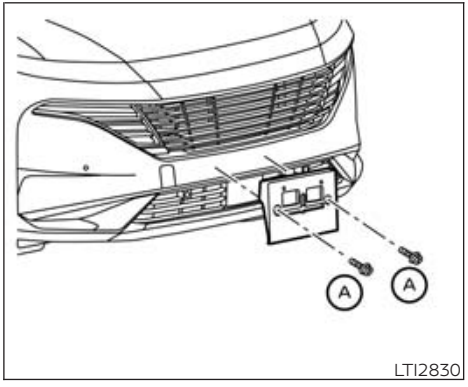

To mount the front license plate, attach the license plate bracket to the plastic finisher at the location marks (small dimples) using the two provided screws Ⓐ.

BASIC INFORMATION

⚠WARNING

- **It is extremely dangerous to ride in a cargo area inside a vehicle. In a collision, people riding in these areas are more likely to be seriously injured or killed.**
- **Do not allow people to ride in any area of your vehicle that is not equipped with seats and seat belts.**
- **Be sure everyone in your vehicle is in a seat and using a seat belt properly.**

TERMS

It is important to familiarize yourself with the following terms before loading your vehicle:

- Curb Weight (actual weight of your vehicle) - vehicle weight including: standard and optional equipment, fluids, emergency tools, and spare tire assembly. This weight **does not** include passengers and cargo.
- GVW (Gross Vehicle Weight) - curb weight plus the combined weight of passengers and cargo.
- GVWR (Gross Vehicle Weight Rating) - maximum total combined weight of the unloaded vehicle, passengers, cargo, hitch, trailer tongue load and any other optional equipment. This information is located on the F.M.V.S.S./C.M.V.S.S. certification label.
- GAWR (Gross Axle Weight Rating) - maximum weight (load) limit specified for the front or rear axle. This information is located on the F.M.V.S.S./C.M.V.S.S. certification label.
- GCWR (Gross Combined Weight Rating) - The maximum total weight rating of the vehicle, passengers, cargo, and trailer.
- Vehicle Capacity Weight, Load limit, Total load capacity - maximum total weight limit specified of the load (passengers and cargo) for the vehicle. This is the maximum combined weight of occupants and cargo that can be loaded into the vehicle. If the vehicle is used to tow a trailer, the trailer tongue weight must be included as part of the cargo load. This information is located on the Tire and Loading Information label.
- Cargo capacity - permissible weight of cargo, the subtracted weight of occupants from the load limit.

VEHICLE LOAD CAPACITY

Basic information

Before driving a loaded vehicle, confirm that you do not exceed the Gross Vehicle Weight Rating (GVWR) or the Gross Axle Weight Rating

(GAWR) for your vehicle. Both the GVWR and GAWR are located on the F.M.V.S.S./C.M.V.S.S. certification label. For additional information, see "Measurement of weights" (P. 572).

Do not exceed the load limit of your vehicle shown as "The combined weight of occupants and cargo" on the Tire and Loading Information label. Do not exceed the number of occupants shown as "Seating Capacity" on the Tire and Loading Information label.

To get "the combined weight of occupants and cargo", add the weight of all occupants, then add the total cargo weight. Examples are shown in the following illustration.

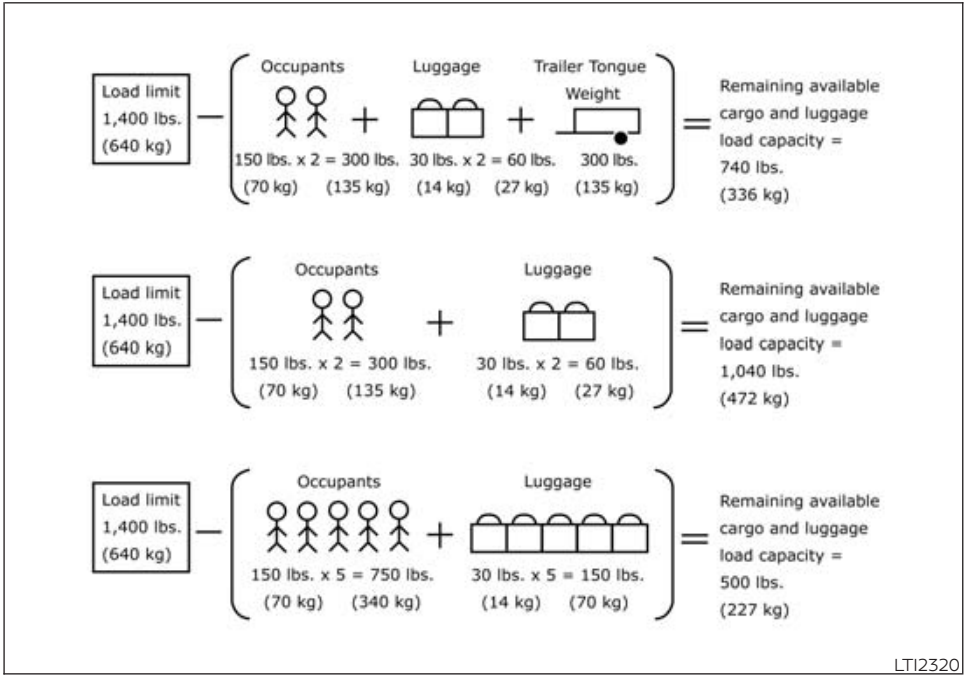

Example

Steps For Determining Correct Load Limit

1. Locate the statement "The combined weight of occupants and cargo should never exceed XXX kg or XXX lbs." on your vehicle's placard.
2. Determine the combined weight of the driver and passengers that will be riding in your vehicle.
3. Subtract the combined weight of the driver and passengers from XXX kg. or XXX lbs.
4. The resulting figure equals the available amount of cargo and luggage load capacity. For example, if the "XXX" amount equals 1400 lbs. and there will be five 150 lb. passengers in your vehicle, the amount of available cargo and luggage load capacity is 650 lbs. (1400-750 (5 X 150) = 650 lbs.)
5. Determine the combined weight of luggage and cargo being loaded on the vehicle. That weight may not safely exceed the available cargo and luggage load capacity calculated in step 4.
6. If your vehicle will be towing a trailer, load from your trailer will be transferred to your vehicle. Consult this manual to determine how this reduces the available cargo and luggage load capacity of your vehicle.

Before driving a loaded vehicle, confirm that you do not exceed the GVWR or the GAWR for your vehicle. For additional information, see "Measurement of weights" (P. 572).

Also check tires for proper inflation pressures. For additional information, see "Tire and Loading Information label" (P. 513).

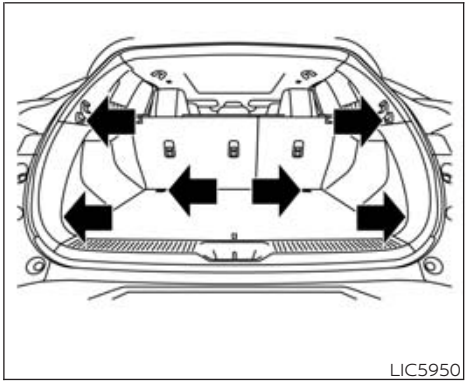

Cargo area luggage hooks

SECURING THE LOAD

There are luggage hooks located in the cargo area as shown. The hooks can be used to secure cargo with ropes or other types of straps.

When securing items using luggage hooks located on the side finisher do not apply a load over more than 6.5 lbs. (29 N) to a single hook.

The luggage hooks that are located on the floor should have loads less than 110 lbs. (490 N) to a single hook.

⚠WARNING

- **Properly secure all cargo with ropes or straps to help prevent it from sliding or shifting. Do not place cargo higher than the seatbacks. In a sudden stop or collision, unsecured cargo could cause personal injury.**
- **The child restraint top tether strap may be damaged by contact with items in the cargo area. Secure any items in the cargo area. Your child could be seriously injured or killed in a collision if the top tether strap is damaged.**
- **Do not load your vehicle any heavier than the GVWR or the maximum front and rear GAWRs. If you do, parts of your vehicle can break, tire damage could occur, or it can change the way your vehicle handles. This could result in loss of control and cause personal injury.**

LOADING TIPS

- The GVW must not exceed GVWR or GAWR as specified on the F.M.V.S.S./C.M.V.S.S. certification label.
- Do not load the front and rear axle to the GAWR. Doing so will exceed the GVWR.

⚠WARNING

- **Properly secure all cargo with ropes or straps to help prevent it from sliding or shifting. Do not place cargo higher than the seatbacks. In a sudden stop or collision, unsecured cargo could cause personal injury.**
- **Do not load your vehicle any heavier than the GVWR or the maximum front and rear GAWRs. If you do, parts of your vehicle can break, tire damage could occur, or it can change the way your vehicle handles. This could result in loss of control and cause personal injury.**
- **Overloading not only can shorten the life of your vehicle and the tire, but can also cause unsafe vehicle handling and longer braking distances. This may cause a premature tire failure which could result in a serious accident and personal injury. Failures caused by overloading are not covered by the vehicle's warranty.**

MEASUREMENT OF WEIGHTS

Secure loose items to prevent weight shifts that could affect the balance of your vehicle. When the vehicle is loaded, drive to a scale and weigh the front and the rear wheels separately to determine axle loads. Individual axle loads should not exceed either of the Gross Axle Weight Ratings (GAWR). The total of the axle loads should not exceed the Gross Vehicle Weight Rating (GVWR). These ratings are given on the vehicle certification label. If weight ratings are exceeded, move or remove items to bring all weights below the ratings.

BASIC INFORMATION

⚠WARNING

Overloading or improper loading of a trailer and its cargo can adversely affect vehicle handling, braking and performance and may lead to accidents.

⚠CAUTION

- **Do not tow a trailer or haul a heavy load for the first 500 miles (805 km). Your engine, axle or other parts could be damaged.**
- **For the first 500 miles (805 km) that you tow a trailer, do not drive over 50 mph (80 km/h) and do not make starts at full throttle. This helps the engine and other parts of your vehicle wear in at the heavier loads.**

NOTE:

Tow hitches are available as an accessory for this vehicle. If a tow hitch is installed, the liftgate electronic control unit (ECU) needs to be replaced with an ECU programmed with towing logic for the Motion-Activated Liftgate to function properly.

Your new vehicle was designed to be used primarily to carry passengers and cargo. Remember that towing a trailer places additional loads on your vehicle's engine, drive train, steering, braking and other systems.

A NISSAN Towing Guide (U.S. only) is available on the website at www.nissanusa.com. This guide includes information on trailer towing capability and the special equipment required for proper towing.

MAXIMUM LOAD LIMITS

Maximum trailer loads

Never allow the total trailer load to exceed the value specified in the "Towing Load/ Specification" chart found in this section. The total trailer load equals trailer weight plus its cargo weight.

The maximum Gross Combined Weight Rating (GCWR) should not exceed the value specified in the following Towing Load/ Specification Chart.

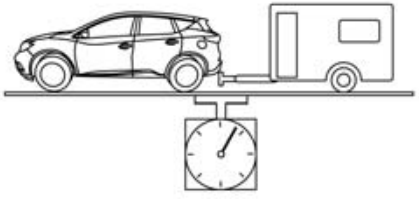

LTI2105

The Gross Combined Weight Rating (GCWR) equals the combined weight of the towing vehicle (including passengers and cargo) plus the total trailer load. Towing loads greater than these or using improper towing equipment could adversely affect vehicle handling, braking and performance.

The ability of your vehicle to tow a trailer is not only related to the maximum trailer loads, but also the places you plan to tow. Tow weights appropriate for level highway driving may have to be reduced for low traction situations (for example, on slippery boat ramps).

Temperature conditions can also affect towing. For example, towing a heavy trailer in high outside temperatures on graded roads can affect engine performance and cause overheating. The engine protection mode, which helps reduce the chance of engine damage, could activate and automatically decrease engine power. Vehicle speed may decrease under high load. Plan your trip carefully to account for trailer and vehicle load, weather and road conditions.

⚠ WARNING

Overheating can result in reduced engine power and vehicle speed. The reduced speed may be lower than other traffic, which could increase the chance of a collision. Be especially careful when driving. If the vehicle cannot maintain a safe driving speed, pull to the side of the road in a safe area. Allow the engine to cool and return to normal operation. For additional information, see "If your vehicle overheats" (P. 472).

⚠ CAUTION

Vehicle damage resulting from improper towing procedures is not covered by NISSAN warranties.

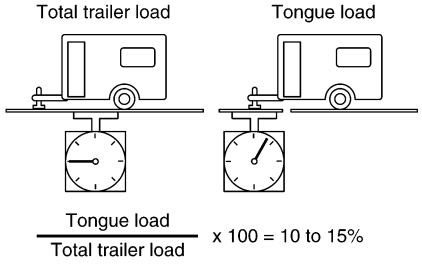

WTI0160

Tongue load

When using a weight carrying or a weight distributing hitch, keep the tongue load between 10 - 15% of the total trailer load or use the trailer tongue load specified by the trailer manufacturer. The tongue load must be within the maximum tongue load limits shown in the following "Towing Load/ Specification" chart. If the tongue load becomes excessive, rearrange cargo to allow for proper tongue load.

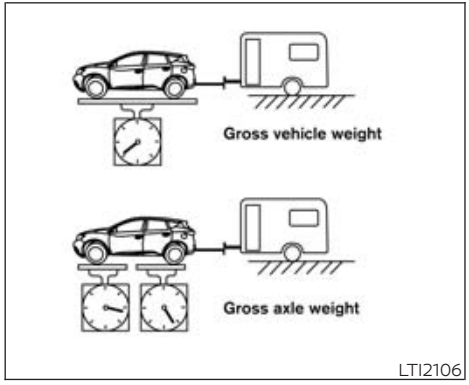

Maximum Gross Vehicle Weight (GVW)/maximum Gross Axle Weight (GAW)

The GVW of the towing vehicle must not exceed the Gross Vehicle Weight Rating (GVWR) shown on the F.M.V.S.S./C.M.V.S.S. certification label. The GVW equals the combined weight of the unloaded vehicle, passengers, luggage, hitch, trailer tongue load and any other optional equipment. In addition, front or rear GAW must not exceed the Gross Axle Weight Rating (GAWR) shown on the F.M.V.S.S./C.M.V.S.S. certification label.

Towing capacities are calculated assuming a base vehicle with driver and any options required to achieve the rating. Additional passengers, cargo and/or optional equipment, such as the trailer hitch, will add weight to the vehicle and reduce your vehicle's maximum towing capacity and trailer tongue load.

The vehicle and trailer need to be weighed to confirm the vehicle is within the GVWR, Front GAWR, Rear GAWR, Gross Combined Weight Rating (GCWR) and Towing capacity.

All vehicle and trailer weights can be measured using platform type scales commonly found at truck stops, highway weigh stations, building supply centers or salvage yards.

To determine the available payload capacity for tongue/king pin load, use the following procedure.

1. Locate the GVWR on the F.M.V.S.S./C.M.V.S.S. certification label.
2. Weigh your vehicle on the scale with all of the passengers and cargo that are normally in the vehicle when towing a trailer.
3. Subtract the actual vehicle weight from the GVWR. The remaining amount is the available maximum tongue/king pin load.

To determine the available towing capacity, use the following procedure.

1. Find the GCWR for your vehicle on the "Towing Load/Specification" chart found in this section.
2. Subtract the actual vehicle weight from the GCWR. The remaining amount is the available maximum towing capacity.

To determine the Gross Trailer Weight, weigh your trailer on a scale with all equipment and cargo, that are normally in the trailer when it is towed. Make sure the Gross trailer weight is not more than the Gross Trailer Weight Rating shown on the trailer and is not more than the calculated available maximum towing capacity.

Also weigh the front and rear axles on the scale to make sure the Front Gross Axle Weight and Rear Gross Axle Weight are not more than Front Gross Axle Weight and Rear Gross Axle Weight on the F.M.V.S.S./C.M.V.S.S. certification label. The cargo in

the trailer and vehicle may need to be moved or removed to meet the specified ratings.

Example:

- Gross Vehicle Weight (GVW) as weighed on a scale - including passengers, cargo and hitch - 6,350 lbs. (2,880 kg).
- Gross Vehicle Weight Rating (GVWR) from F.M.V.S.S./C.M.V.S.S. certification label - 7,250 lbs. (3,289 kg).
- Gross Combined Weight Rating (GCWR) from "Towing Load/Specification" chart - 15,100 lbs. (6,849 kg).
- Maximum Trailer towing capacity from "Towing Load/Specification" chart - 9,100 lbs. (4,128 kg).

7,250 lbs. (3,289 kg)	GVWR
-6,350 lbs. (2,880 kg)	GVW
=900 lbs. (409 kg)	Available for tongue weight
15,100 lbs. (6,849 kg)	GCWR
-6,350 lbs. (2,880 kg)	GVW
=9,123 lbs. (4,138 kg)	Capacity available for towing
900 lbs. (409 kg)	Available tongue weight
/8,750 lbs. (3,969 kg)	Available Capacity
=	10 % tongue weight

LTI2782

The available towing capacity may be less than the maximum towing capacity due to the passenger and cargo load in the vehicle.

Remember to keep trailer tongue weight between 10 - 15% of the trailer weight or within the trailer tongue load specification recommended by the trailer manufacturer. If the tongue load becomes excessive, re-arrange the cargo to obtain the proper tongue load. Do not exceed the maximum tongue weight specification shown in the "Towing load/specification" chart even if the calculated available tongue weight is greater than 15%. If the calculated tongue weight is less than 10%, reduce the total trailer weight to match the available tongue weight.

Always verify that available capacities are within the required ratings.

Trailer frontal area

⚠ CAUTION

Exceeding the maximum trailer frontal area specification may exceed the towing capacity of the vehicle. This may affect the towing performance and lead to vehicle damage.

The trailer frontal area affects the towing load of a trailer. The frontal area is the total area of the vehicle and trailer that is affected by air resistance while towing. Do not exceed the maximum trailer frontal area specification shown in the "Towing Load/Specification" chart. The frontal area can be determined by multiplying the width of the trailer by the height of the trailer. For example, a trailer that is 8 feet wide by 6 feet tall has a trailer frontal area of 48 square feet.

TOWING LOAD/SPECIFICATION

⚠ WARNING

The towing capacities provided in this manual are for general reference only. The safe towing capacity of your vehicle is affected by dealer and factory installed options and passenger and cargo loads. You must weigh the vehicle and trailer as described in this manual to determine the actual vehicle towing capacity. Do not exceed the published maximum towing capacity or the GCWR or the GVWR shown on the FMVSS/CMVSS label. Doing so can result in an accident causing serious personal injury or property damage.

Maximum Towing Capacity

The towing capacity values are calculated assuming a base vehicle with driver and any options required to achieve the rating. Additional passengers, cargo and/or optional equipment will add weight to the vehicle and reduce your vehicle's maximum towing capacity.

- Metric Measure: 680 kg
- US Measure: 1,500 lbs.

Maximum Tongue Load

- Metric Measure: 68 kg
- US Measure: 150 lbs.

Maximum Gross Combined Weight Rating

- Metric Measure: 3,075 kg
- US Measure: 6,780 lbs.

TOWING SAFETY

Trailer hitch

Your vehicle may be equipped with an optional trailer tow package. The trailer tow package includes a receiver-type frame mounted hitch. This hitch is rated for the maximum towing capacity of this vehicle when the proper towing equipment is used. Choose a proper ball mount and hitch ball that is rated for the trailer to be towed. Genuine NISSAN ball mounts and hitch balls are available from a NISSAN dealer.

If your vehicle is not equipped with the optional trailer tow package, check the towing capacity of your bumper hitch or receiver-type frame mounted hitch. Choose a proper hitch for your vehicle and trailer. A Genuine NISSAN trailer hitch is available from a NISSAN dealer. Make sure the trailer hitch is securely attached to the vehicle to help avoid personal injury or property damage due to sway caused by crosswinds, rough road surfaces or passing trucks.

⚠ WARNING

Trailer hitch components have specific weight ratings. Your vehicle may be capable of towing a trailer heavier than the weight rating of the hitch components. Never exceed the weight rating of the hitch components. Doing so can cause serious personal injury or property damage.

Hitch ball

Choose a hitch ball of the proper size and weight rating for your trailer:

- The required hitch ball size is stamped on most trailer couplers. Most hitch balls also have the size printed on the top of the ball.
- Choose the proper class hitch ball based on the trailer weight.
- The diameter of the threaded shank of the hitch ball must be matched to the ball mount hole diameter. The hitch ball shank should be no more than 1/16" smaller than the hole in the ball mount.
- The threaded shank of the hitch ball must be long enough to be properly secured to the ball mount. There should be at least 2 threads showing beyond the lock washer and nut.

Ball mount

The hitch ball is attached to the ball mount and the ball mount is inserted into the hitch receiver. Choose a proper class ball mount based on the trailer weight. Additionally, the ball mount should be chosen to keep the trailer tongue level with the ground.

Weight carrying hitches

A weight carrying or "dead weight" ball mount is one that is designed to carry the whole amount of tongue weight and gross weight directly on the ball mount and on the receiver.

Weight distribution hitch

This type of hitch is also called a "load-leveling" or "equalizing" hitch. A set of bars attach to the ball mount and to the trailer to distribute the tongue weight (hitch weight) of your trailer. Many vehicles can't carry the full tongue weight of a given trailer, and need some of the tongue weight transferred through the frame and pushing down on the front wheels. This gives stability to the tow vehicle.

A weight-distributing hitch system (Class IV) is recommended if you plan to tow trailers with a maximum weight over 5,000 lbs. (2,268 kg). Check with the trailer and towing equipment manufacturers to determine if they recommend the use of a weight-distributing hitch system.

NOTE:

A weight-distributing hitch system may affect the operation of trailer surge brakes. If you are considering use of a weight-distributing hitch system with a surge brake-equipped trailer, check with the surge brake, hitch or trailer manufacturer to determine if and how this can be done.

Follow the instructions provided by the manufacturer for installing and using the weight-distributing hitch system.

General set-up instructions are as follows:

1. Park unloaded vehicle on a level surface. With the ignition switch in the ON position and the doors closed, allow the vehicle to stand for several minutes so that it can level.
2. Measure the height of a reference point on the front and rear bumpers at the center of the vehicle.
3. Attach the trailer to the vehicle and adjust the hitch equalizers so that the front bumper height is within 0 - .5 inches (0 – 13 mm) of the reference height measured in step 2. The rear bumper should be no higher than the reference height measured in step 2.

⚠ WARNING

Properly adjust the weight distributing hitch so the rear of the bumper is no higher than the measured reference height when the trailer is attached. If the rear bumper is higher than the measured reference height when loaded, the vehicle may handle unpredictably which could cause a loss of vehicle control and cause serious personal injury or property damage.

Sway control device

Sudden maneuvers, wind gusts, and buffeting caused by other vehicles can affect trailer handling. Sway control devices may be used to help control these affects. If you choose to use one, contact a reputable trailer hitch supplier to make sure the sway control device will work with the vehicle, hitch, trailer and the trailer's brake system. Follow the instructions provided by the manufacturer for installing and using the sway control device.

Class I hitch

Class I trailer hitch equipment (receiver, ball mount and hitch ball) can be used to tow trailers of a maximum weight of 2,000 lbs. (907 kg).

Tire pressures

- When towing a trailer, inflate the vehicle tires to the recommended cold tire pressure indicated on the Tire and Loading Information label.
- Trailer tire condition, size, load rating and proper inflation pressure should be in accordance with the trailer and tire manufacturer's specifications.

Safety chains

Always use suitable safety chains between your vehicle and the trailer. The safety chains should be crossed and should be attached to the hitch, not to the vehicle bumper or axle. The safety chains can be attached to the bumper if the hitch ball is mounted to the bumper. Be sure to leave enough slack in the chains to permit turning corners.

Trailer lights

⚠ CAUTION

When splicing into the vehicle electrical system, a commercially available power-type module/converter must be used to provide power for all trailer lighting. This unit uses the vehicle battery as a direct power source for all trailer lights while using the vehicle tail light, stop light and turn signal circuits as a signal source. The module/converter must draw no more than 15 milliamps from the stop and tail lamp circuits. Using a module/converter that exceeds these power requirements may damage the vehicle's electrical system. It is recommended that you visit a reputable trailer retailer to obtain the proper equipment and to have it installed.

Trailer lights should comply with federal and/or local regulations. For assistance in hooking up trailer lights, it is recommended that you contact a NISSAN dealer or reputable trailer retailer. Vehicles equipped with the optional trailer tow package are equipped with a flat 4-pin connector, an adapter will be needed to connect the

trailer lights to the vehicle. Adapters are available at auto parts stores and hitch retailers.

Pre-towing tips

- Be certain your vehicle maintains a level position when a loaded and/or unloaded trailer is hitched. Do not drive the vehicle if it has an abnormal nose-up or nose-down condition; check for improper tongue load, overload, worn suspension or other possible causes of either condition.
- Always secure items in the trailer to prevent load shift while driving.
- Keep the cargo load as low as possible in the trailer to keep the trailer center of gravity low.
- Load the trailer so approximately 60% of the trailer load is in the front half and 40% is in the back half. Also make sure the load is balanced side to side.
- Check your hitch, trailer tire pressure, vehicle tire pressure, trailer light operation, and trailer wheel lug nuts every time you attach a trailer to the vehicle.
- Be certain your rearview mirrors conform to all federal, state or local regulations. If not, install any mirrors required for towing before driving the vehicle.
- Determine the overall height of the vehicle and trailer so the required clearance is known.

Trailer towing tips

In order to gain skill and an understanding of the vehicle's behavior, you should practice turning, stopping and backing up in an area which is free from traffic. Steering stability and braking performance will be somewhat different than under normal driving conditions.

- Always secure items in the trailer to prevent load shift while driving.
- Lock the trailer hitch coupler with a pin or lock to prevent the coupler from inadvertently becoming unlatched.
- Avoid abrupt starts, acceleration or stops.
- Avoid sharp turns or lane changes.
- Always drive your vehicle at a moderate speed.
- When backing up, hold the bottom of the steering wheel with one hand. Move your hand in the direction in which you want the trailer to go. Make small corrections and back up slowly. If possible, have someone guide you when you are backing up.

Always block the wheels on both vehicle and trailer when parking. Parking on a slope is not recommended; however, if you must do so:

⚠ CAUTION

If you press the park button to engage the P (Park) position before blocking the wheels and applying the parking brake, transmission damage could occur.

1. Apply and hold the brake pedal.
2. Have someone place blocks on the downhill side of the vehicle and trailer wheels.
3. After the wheel blocks are in place, slowly release the brake pedal until the blocks absorb the vehicle load.
4. Apply the parking brake.
5. Press the park button to engage the P (Park) position.
6. Turn off the engine.

To drive away:

1. Start the vehicle.
2. Apply and hold the brake pedal.
3. Shift the transmission into gear.
4. Release the parking brake.
5. Drive slowly until the vehicle and trailer are clear from the blocks.
6. Apply and hold the brake pedal.
7. Have someone retrieve and store the blocks.

- While going downhill, the weight of the trailer pushing on the tow vehicle may decrease overall stability. Therefore, to maintain adequate control, reduce your speed and shift to a lower gear. Avoid long or repeated use of the brakes when descending a hill, as this reduces their effectiveness and could cause overheating. Shifting to a lower gear instead provides "engine braking" and reduces the need to brake as frequently.
- If the engine coolant temperature rises to a high temperature, see "If your vehicle overheats" (P. 472).
- Trailer towing requires more fuel than normal circumstances.
- Avoid towing a trailer for your vehicle's first 500 miles (805 km).
- For the first 500 miles (805 km) that you do tow, do not drive over 50 mph (80 km/h).
- Have your vehicle serviced more often than at intervals specified in the recommended Maintenance Schedule in the "Maintenance and schedules" section of this manual.
- When making a turn, your trailer wheels will be closer to the inside of the turn than your vehicle wheels. To compensate for this, make a larger than normal turning radius during the turn.
- Crosswinds and rough roads will adversely affect vehicle/trailer handling, possibly causing vehicle sway. When being passed by larger vehicles, be prepared for possible changes in crosswinds that could affect vehicle handling.

Do the following if the trailer begins to sway:

1. Take your foot off the accelerator pedal to allow the vehicle to coast and steer as straight ahead as the road conditions allow. This combination will help stabilize the vehicle
   - Do not correct trailer sway by steering or applying the brakes.
2. When the trailer sway stops, gently apply the brakes and pull to the side of the road in a safe area.
3. Try to rearrange the trailer load so it is balanced as described in this section.

- Be careful when passing other vehicles. Passing while towing a trailer requires considerably more distance than normal passing. Remember, the length of the trailer must also pass the other vehicle before you can safely change lanes.
- Downshift the transmission to a lower gear for engine braking when driving down steep or long hills. This will help slow the vehicle without applying the brakes.
- Avoid holding the brake pedal down too long or too frequently. This could cause the brakes to overheat, resulting in reduced braking efficiency.
- Increase your following distance to allow for greater stopping distances while towing a trailer. Anticipate stops and brake gradually.
- NISSAN recommends that the cruise control not be used while towing a trailer.

- Some states or provinces have specific regulations and speed limits for vehicles that are towing trailers. Obey the local speed limits.
- Check your hitch, trailer wiring harness connections, and trailer wheel lug nuts after 50 miles (80 km) of travel and at every break.
- When launching a boat, don't allow the water level to go over the exhaust tail pipe or rear bumper.
- Make sure you disconnect the trailer lights before backing the trailer into the water or the trailer lights may burn out.

When towing a trailer, final drive gear oil should be replaced and transmission oil/fluid should be changed more frequently. For additional information, see the "Do-it-yourself" section of this manual.

FLAT TOWING FOR ALL-WHEEL DRIVE VEHICLE (if so equipped)

Towing your vehicle with all four wheels on the ground is sometimes called flat towing, dinghy towing or 4 down towing. This method is sometimes used when towing a vehicle behind a recreational vehicle, such as a motor home.

⚠ CAUTION

- **Failure to follow these guidelines can result in severe transmission damage.**
- **Never flat tow your All-Wheel Drive (AWD) vehicle.**
- **DO NOT tow your All-Wheel Drive (AWD) vehicle with any wheels on the ground. Doing so may cause serious and expensive damage to the powertrain.**
- **For emergency towing procedures see "Towing recommended by NISSAN" (P. 473).**

FLAT TOWING FOR FRONT WHEEL DRIVE VEHICLE (if so equipped)

Towing your vehicle with all four wheels on the ground is sometimes called flat towing, dinghy towing or 4 down towing. This method is sometimes used when towing a vehicle behind a recreational vehicle, such as a motor home.

⚠ CAUTION

- **Failure to follow these guidelines can result in severe transmission damage.**
- **Whenever flat towing your vehicle, always tow forward, never backward.**
- **Never tow your front wheel drive vehicle with the front tires on the ground. Doing so may cause serious and expensive damage to the powertrain.**
- **DO NOT tow your front wheel drive automatic transmission vehicle with all four wheels on the ground (flat towing). Doing so WILL DAMAGE internal transmission parts due to lack of transmission lubrication.**
- **For emergency towing procedures, see "Towing recommended by NISSAN" (P. 473).**

AUTOMATIC TRANSMISSION

To tow a vehicle equipped with an automatic transmission, an appropriate vehicle dolly **MUST** be placed under the towed vehicle's drive wheels. **Always** follow the dolly manufacturer's recommendations when using their product.

NOTE:

If the battery is completely drained the transmission will not manually shift to other positions.

DOT (Department of Transportation) Quality Grades: All passenger car tires must conform to federal safety requirements in addition to these grades.

Quality grades can be found where applicable on the tire sidewall between tread shoulder and maximum section width. For example:

Treadwear 200 Traction AA Temperature A

Treadwear

The treadwear grade is a comparative rating based on the wear rate of the tire when tested under controlled conditions on a specified government test course. For example, a tire graded 150 would wear one and one-half (1 1/2) times as well on the government course as a tire graded 100. The relative performance of tires depends upon the actual conditions of their use, however, and may depart significantly from the norm due to variations in driving habits, service practices and differences in road characteristics and climate.

Traction AA, A, B and C

The traction grades, from highest to lowest, are AA, A, B, and C. Those grades represent the tire's ability to stop on wet pavement as measured under controlled conditions on specified government test surfaces of asphalt and concrete. A tire marked C may have poor traction performance.

⚠ WARNING

The traction grade assigned to this tire is based on straight-ahead braking traction tests, and does not include acceleration, cornering, hydroplaning, or peak traction characteristics.

Temperature A, B and C

The temperature grades are A (the highest), B, and C, representing the tire's resistance to the generation of heat, and its ability to dissipate heat when tested under controlled conditions on a specified indoor laboratory test wheel. Sustained high temperature can cause the material of the tire to degenerate and reduce tire life, and excessive temperature can lead to sudden tire failure. The grade C corresponds to a level of performance which all passenger car tires must meet under the Federal Motor Safety Standard No. 109. Grades B and A represent higher levels of performance on the laboratory test wheel than the minimum required by law.

⚠ WARNING

The temperature grade for this tire is established for a tire that is properly inflated and not overloaded. Excessive speed, under-inflation, or excessive loading, either separately or in combination, can cause heat build-up and possible tire failure.

For USA

If you believe that your vehicle has a defect which could cause a crash or could cause injury or death, you should immediately inform the National Highway Traffic Safety Administration (NHTSA) in addition to notifying NISSAN.

If NHTSA receives similar complaints, it may open an investigation, and if it finds that a safety defect exists in a group of vehicles, it may order a recall and remedy campaign. However, NHTSA cannot become involved in individual problems between you, your dealer, or NISSAN.

To contact NHTSA, you may call the Vehicle Safety Hotline toll-free at 1-888-327-4236 (TTY: 1-888-275-9171); go to http://www.safercar.gov; or write to: Administrator, NHTSA, 1200 New Jersey Avenue, SE Washington, D.C. 20590. You can also obtain other information about motor vehicle safety from http://www.safercar.gov.

You may notify NISSAN by contacting our Consumer Affairs Department, toll-free, at 1-800-NISSAN-1.

For Canada

If you believe that your vehicle has a defect which could cause a crash or could cause injury or death, you should immediately inform Transport Canada in addition to notifying NISSAN.

If Transport Canada receives complaints, it may open an investigation, and if it finds that a safety defect exists in a group of vehicles, it may request that NISSAN conduct a recall campaign. However, Transport Canada cannot become involved in individual problems between you, your dealer, or NISSAN.

You may contact Transport Canada's Defect Investigations and Recalls Division toll free at 1-800-333-0510. You may also report safety defects online at:
http://www.tc.gc.ca/eng/motorvehiclesafety/menu.htm (English speakers) or
http://www.tc.gc.ca/fra/securiteautomobile/menu.htm (French speakers)

Or contact Transport Canada by mail at:
Transport Canada Motor Vehicle Safety Investigations Laboratory
80 Noel Street Gatineau, QC J8Z0A1

Additional information concerning motor vehicle safety may be obtained from Transport Canada's Road Safety Information Centre at 1-800-333-0371 or online at www.tc.gc.ca/roadsafety (English speakers) or www.tc.gc.ca/securiteroutiere (French speakers).

To notify NISSAN of any safety concerns please contact our Consumer Information Centre toll free at 1-800-387-0122.

READINESS FOR INSPECTION/ MAINTENANCE (I/M) TEST

⚠ WARNING

A vehicle equipped with All -Wheel Drive (AWD) should never be tested using a two wheel dynamometer (such as the dynamometers used by some states for emissions testing), or similar equipment. Make sure you inform the test facility personnel that your vehicle is equipped with AWD before it is placed on a dynamometer. Using the wrong test equipment may result in drivetrain damage or unexpected vehicle movement which could result in serious vehicle damage or personal injury.

Due to legal requirements in some states and Canadian Provinces, your vehicle may be required to be in what is called the "ready condition" for an Inspection/Maintenance (I/M) test of the emission control system.

The vehicle is set to the "ready condition" when it is driven through certain driving patterns. Usually, the ready condition can be obtained by ordinary usage of the vehicle.

If a powertrain system component is repaired or the battery is disconnected, the vehicle may be reset to a "not ready" condition. Before taking the I/M test, check the vehicle's inspection/maintenance test readiness condition. Place the ignition switch in the ON position without starting the engine. If the Malfunction Indicator Light (MIL) comes on steady for 20 seconds and then blinks for 10 seconds , the I/M test condition is "not ready". If the MIL does not blink after 20 seconds, the I/M test condition is "ready". It is recommended that you visit a NISSAN dealer to set the "ready condition" or to prepare the vehicle for testing.

EMISSION CONTROL SYSTEM WARRANTY

Your NISSAN vehicle is covered by the following emission warranties:

For USA

1. Emission Defects Warranty
2. Emissions Performance Warranty

Details of this warranty may be found with other vehicle warranties in your Warranty Information Booklet which comes with your NISSAN vehicle. If you did not receive a Warranty Information Booklet, or it is lost, you may obtain a replacement by writing to:

- Nissan North America, Inc.
  Consumer Affairs Department
  P.O. Box 685003
  Franklin, TN 37068-5003

For Canada

Emission Control System Warranty

Details of this warranty may be found with other vehicle warranties in your Warranty Information Booklet which comes with your NISSAN vehicle. If you did not receive a Warranty Information Booklet, or it is lost, you may obtain a replacement by writing to:

- Nissan Canada Inc.
  5290 Orbitor Drive
  Mississauga, Ontario, L4W 4Z5

EVENT DATA RECORDERS (EDR)

BASIC INFORMATION

This vehicle is equipped with an Event Data Recorder (EDR). The main purpose of an EDR is to record, in certain crash or near crash-like situations, such as an air bag deployment or hitting a road obstacle, data that will assist in understanding how a vehicle's systems performed. The EDR is designed to record data related to vehicle dynamics and safety systems for a short period of time, typically 30 seconds or less. The EDR in this vehicle is designed to record such data as:

- How various systems in your vehicle were operating;
- Whether or not the driver and passenger safety belts were buckled/fastened;
- How far (if at all) the driver was depressing the accelerator and/or brake pedal; and,
- How fast the vehicle was traveling.
- Sounds are not recorded.

These data can help provide a better understanding of the circumstances in which crashes and injuries occur. NOTE: EDR data are recorded by your vehicle only if a non-trivial crash situation occurs; no data are recorded by the EDR under normal driving

conditions and no personal data (e.g., name, gender, age, and crash location) are recorded. However, other parties, such as law enforcement, could combine the EDR data with the type of personally identifying data routinely acquired during a crash investigation.

To read data recorded by an EDR, special equipment is required, and access to the vehicle or the EDR is needed. In addition to the vehicle manufacturer and NISSAN dealer, other parties, such as law enforcement, that have the special equipment, can read the information if they have access to the vehicle or the EDR.

EDR data will only be accessed with the consent of the vehicle owner or lessee or as otherwise required or permitted by law.

ADDITIONAL DATA RECORDING (on vehicles equipped with optional ProPILOT Assist)

If your vehicle is equipped with the optional ProPILOT Assist, it will also be equipped with supplemental data recording function intended to assist in understanding how ProPILOT Assist performs in certain non-trivial crash or near-crash scenarios. Specifically, supplemental recording is designed to capture the following:

For ProPILOT Assist

- Driver operational status of accelerator, brakes, steering, etc.
- Detection status of a vehicle ahead and lane markers
- Vehicle information including distance to vehicle ahead and lateral position
- Information on the operation of the ProPILOT Assist and other crash avoidance features
- ProPILOT Assist malfunction diagnosis information
- External images from multi-sensing front camera (Available only when the SRS air bag or AEB with Pedestrian Detection system is activated)

For ProPILOT Assist 2.1

- Driver operational status of accelerator, brakes, steering, etc.
- Detection status of direction of the driver's face and opening/closing of the driver's eyelids
- Information on the operation of the ProPILOT Assist 2.1 and other crash avoidance features
- Detection status of a vehicle ahead and lateral position, lane markers and road structure
- Vehicle information including the vehicle speed, the vehicle position (from GNSS), etc.
- External images from the multi-sensing front camera

  (Available only when the SRS air bag or AEB with Pedestrian Detection system is activated)

ProPILOT Assist does not record conversations, sounds or images of the inside of the vehicle.

To read this vehicle data, special equipment is required and access to the vehicle or the recording unit is needed. This vehicle data will only be accessed with the consent of the vehicle owner or lessee or as otherwise required or permitted by law.

If downloaded, NISSAN and third parties entrusted by NISSAN may use the data recorded for the purpose of improving NISSAN's vehicle safety performance.

NISSAN and third parties entrusted by NISSAN will not disclose/provide the recorded data to a third party except:

- With the consent of the vehicle owner or with the consent of the lessee
- In response to an official request from law enforcement, a court order, governmental agency, or other legally enforceable requests
- For use as part of NISSAN's defense of litigation
- For research purposes after the data is modified such that it is no longer tied to a specific vehicle or vehicle owner

If you have any questions regarding the data NISSAN may collect about you, please visit our Privacy Policy:
https://www.nissanusa.com.

OWNER'S MANUAL/SERVICE MANUAL ORDER INFORMATION

Genuine NISSAN Service Manuals for this model year and prior can be purchased. A Genuine NISSAN Service Manual is the best source of service and repair information for your vehicle. This manual is the same one used by the factory-trained technicians working at NISSAN dealerships. Genuine NISSAN Owner's Manuals can also be purchased.

For USA

For current pricing and availability of Genuine **NISSAN Service Manuals,** contact:

www.nissan-techinfo.com

For current pricing and availability of Genuine **NISSAN Owner's Manuals,** visit

https://www.nissanusa.com

For Canada

To purchase a copy of a Genuine NISSAN Service Manual or Owner's Manual, for this model year and prior, please visit the nearest NISSAN dealer. For the phone number and location of a NISSAN dealer in your area, call the NISSAN Information Center at 1-800-387-0122 and a bilingual NISSAN representative will assist you.

MEMO

11 Index

A

Active Brake Limited Slip (ABLS) system. 437
Active noise cancellation 454
Active sound enhancement. 454
Active Ride Control 438
Air bag (See supplemental restraint system) 53
Air bag system
Front (See supplemental front impact air bag system). 61
Air bag warning labels 74
Air bag warning light. 74, 90
Air bag warning light, supplemental . .74, 90
Air cleaner 500
Air cleaner housing filter. 500
Air conditioner
Air conditioner operation 258
Air conditioner specification label . . .567
Air conditioner system refrigerant and oil recommendations 562
Air conditioner system refrigerant recommendations 562
Heater and air conditioner. 255
Heater and air conditioner controls . .258
Servicing air conditioner 262
Alarm system (See vehicle security system) 130
All-Wheel Drive 427
Anchor point locations 38
Antenna. 262
Anti-lock brake warning light 87, 90
Anti-lock Braking System (ABS). 433
Antifreeze. 452
Approach unlock function. 196
Armrests 15
Autolight switch 137
Automatic
Automatic power window switch. . . .169
Automatic transmission fluid (ATF). . .494
Driving with automatic transmission 285
Automatic anti-glare inside mirror. 214
Automatic brake hold 95, 294
Automatic door locks. 186
Automatic Emergency Braking (AEB) with Pedestrian Detection. 91, 397
Avoiding collision and rollover 275
AWD 427

B

Battery 452, 496
Charge warning light. 88
Battery replacement
NISSAN Intelligent Key®. 508
Before starting the engine 282
Belt (See drive belt) 499
Blind Spot Warning (BSW) 315
Booster seats 49
Brake
Anti-lock Braking System (ABS) 433
Brake fluid. 494
Brake light (See stop light) 511
Brake system. 432
Brake warning light 87
Brake wear indicators 96, 503
Self-adjusting brakes 503
Brake Assist 434
Brake fluid 494
Brake precautions 432
Brake system 432
Brakes. 503
Break-in schedule. 426
Brightness control
Instrument panel 141
Bulb check/instrument panel 87
Bulb replacement 511

C

C.M.V.S.S. certification label 566
Capacities and recommended fuel/lubricants 557
Car phone or CB radio 263
Care of wheels. 479
Cargo (See vehicle loading information) 568
Cargo area storage bin. 165
Chassis control 438

Check tire pressure 121
Child restraint with top tether strap 37
Child restraints 29, 30, 32, 34
LATCH (Lower Anchors and Tethers for CHildren) System 34
Precautions on child restraints . .40, 45, 49
Top tether strap anchor point locations 38
Child safety rear door lock 187
Cleaning aluminum alloy wheels 479
Cleaning exterior and interior 478, 480
Climate-controlled seat switches 143
Cold weather driving 452
Console box 162
Controls
Heater and air conditioner controls. . .258
Heater and air conditioner controls (automatic). 255
Coolant
Capacities and recommended fuel/lubricants 557
Changing engine coolant 489
Checking engine coolant level 489
Engine coolant temperature gauge . . .84
Corrosion protection 483
Cup holders 163

D

Defroster switch
Rear window and outside mirror defroster switch 135
Dimensions and weights 563
Dimmer switch for instrument panel 141
Distance to empty. 86
Door locks 185
Doors 185
Drive belt. 499
Drive Mode Selector 297
Driving
Cold weather driving 452
Driving with automatic transmission . .285
Precautions when starting and driving 270, 277
Driving the vehicle 284

E

Eco Drive Report 300
Economy - fuel 427
Electronic parking brake 292
Emergency call (SOS) button. 152
Emergency engine shutoff 281, 456
Emission control information label. 566
Emission control system warranty. 585
Engine
Before starting the engine 282
Capacities and recommended fuel/lubricants 557
Changing engine coolant 489
Changing engine oil 491
Changing engine oil filter 491
Checking engine coolant level 489
Checking engine oil level 490
Engine compartment check locations 487
Engine coolant temperature gauge . . .84
Engine cooling system 488
Engine oil 490
Engine oil and oil filter recommendation 561
Engine oil pressure warning light 89
Engine oil viscosity 561
Engine serial number 565
Engine specifications 563
Starting the engine 283
Engine Block Heater 453
Engine coolant temperature gauge 84
Event Data recorders 585, 586
Exhaust gas (Carbon monoxide) 270
Explanation of maintenance items. 528
Explanation of scheduled maintenance items 531
Extended storage switch 159
Eyeglass case 162

F

F.M.V.S.S. certification label 566
Flashers (See hazard warning flasher switch) 456
Flat tire 457, 458
Flat towing your vehicle 581
Floor mat cleaning. 482
Floor mat positioning aid. 482
Fluid
Automatic transmission fluid (ATF) . . .494
Brake fluid 494

Capacities and recommended fuel/lubricants 557
Engine coolant 488
Engine oil 490
Windshield-washer fluid 495
Forward Driving Aids
System Temporarily Unavailable 123
Front air bag system (See supplemental restraint system) 61
Front and rear sonar system 439
Front power seat adjustment 13
Front seats 12
Front-door pocket 160
Fuel
Capacities and recommended fuel/lubricants 557
Fuel economy 427
Fuel gauge 85
Fuel octane rating 560
Fuel recommendation 558
Fuel efficient driving tips 426
Fuel gauge 85
Fuel-filler door 208
Fuses 504
Fusible links 505

G

Garage door opener, HomeLink® Universal Transceiver 176, 178, 179, 180
Gauge
Engine coolant temperature gauge 84
Fuel gauge 85
Odometer 83
Speedometer 82, 83
Tachometer 84
General maintenance 528
Glove box 162

H

Hazard warning flasher switch 456
Head restraints 17
Head Up Display (HUD) 129, 148
Headlight and turn signal switch 136
Headlight control switch 136
Headlights 510
Heated mirrors 217
Heated rear seats 145
Heated seats 144
Heated steering wheel 146
Heater
Heater and air conditioner 255
Heater and air conditioner controls 258
Heater operation 259
Heater and air conditioner settings 260
Hill start assist system 439
HomeLink® Universal Transceiver 176, 178, 179, 180
Hood 200
Hook
Luggage hook 165
Horn 142

I

Idling Stop System 445
Ignition switch
Push-button ignition switch 279
Immobilizer system 131, 282
Important vehicle information label 566
In-cabin microfilter 501
Increasing fuel economy 427
Indicator
NISSAN Intelligent Key® battery discharge indicator 281
Indicator lights and audible reminders (See warning/indicator lights and audible reminders) 87, 90
Inside automatic anti-glare mirror 214
Instrument brightness control 141
Instrument panel 7, 80
Instrument panel dimmer switch 141
Intelligent Around View® Monitor 233
Intelligent Blind Spot Intervention (I-BSI) 325
Intelligent Cruise Control (ICC) 362
Intelligent Drive Alertness (I-DA) 422
Intelligent Forward Collision Warning (I-FCW) 411
Intelligent Key battery 508
Intelligent Key system
Key operating range 188
Key operation 190
Mechanical key 184
Remote keyless entry operation 193
Troubleshooting guide 197

Intelligent Lane Intervention 309
Intelligent Trace Control (I-TC) 438
Interior light 174
iPod®/iPhone® 264
ISOFIX child restraints 34

J

Jump starting 470, 498

K

Key 183
Keyless entry
With Intelligent Key system
(See Intelligent Key system) 193
Keys
NISSAN Intelligent Key® 183, 187

L

Labels
Air conditioner specification label 567
C.M.V.S.S. certification label 566
Emission control information label . . .566
Engine serial number 565
F.M.V.S.S. certification label 566
Tire and Loading Information label . . .566
Vehicle identification number (VIN)
plate 564
Warning labels (for SRS) 74
Lane Departure Warning (LDW) 304
LATCH (Lower Anchors and Tethers for
CHildren) System 34
LED Daytime Running Lights (DRL)
system 141
License plate
Installing the license plate 567
Liftgate 201
Liftgate release 206
Light
Air bag warning light 74, 90
Brake light (See stop light) 511
Bulb check/instrument panel 87
Bulb replacement 511
Charge warning light 88
Exterior and Interior lights 511
Headlight and turn signal switch 136
Headlight control switch 136
Headlights 510
Interior light 174
Light bulbs 510
Low tire pressure warning light 92
Low windshield-washer fluid warning
light 118
Personal lights 175
Spotlights (See map light) 175
Warning/indicator lights and audible
reminders 87, 90
Lights 510
Map lights 175
Lock
Child safety rear door lock 187
Door locks 185
Liftgate release 206
Power door locks 186
Low fuel warning light 94, 118
Low tire pressure warning light 92
Low windshield-washer fluid warning
light 118
Luggage (See vehicle loading
information) 568
Luggage hook 165
Luggage rack (see roof rack) 166, 167

M

Maintenance
General maintenance 528
Inside the vehicle 529
Maintenance precautions 486
Outside the vehicle 529
Seat belt maintenance 29
Under the hood and vehicle 530
Maintenance requirements 528
Maintenance schedules 533
Malfunction indicator light 94
Map lights 175
Map pocket 160
Memory seat 218
Meters and gauges 82
Instrument brightness control 141
Mirror
Automatic anti-glare inside mirror . . .214
Heated mirrors 217
Outside mirrors 215
Rearview 214
Vanity mirror 213
Mirror defroster 135

Mirrors 214
Moonroof 171, 481
Moving Object Detection (MOD). 249

N

NISSAN Intelligent Key®. 183, 187
NISSAN Intelligent Key® battery discharge indicator 281
NISSAN Vehicle Immobilizer System. .131, 282
NissanConnect® Owner's Manual. 223

O

Octane rating (See fuel octane rating). . .560
Odometer 83
Off-road recovery 275
Oil
  Capacities and recommended fuel/lubricants 557
  Changing engine oil 491
  Changing engine oil filter 491
  Checking engine oil level 490
  Engine oil 490
  Engine oil and oil filter recommendation 561
  Engine oil viscosity 561
Outside mirrors 215
Overhead sunglasses holder. 162
Overheat
  If your vehicle overheats. 472
Owner's manual order form 587
Owner's manual/service manual order information 587

P

Parking
  Parking/parking on hills 430
Parking brake. 88, 91, 292
Personal lights. 175
Power
  Power door locks 186
  Power outlet 156
  Power rear windows 169
  Power steering system. 431
  Power windows 167
  Rear power windows 169
Power outlet 156
Power steering 431
Precautions
  Brake precautions 432
  Maintenance precautions. 486
  On-pavement and off-road driving precautions 275
  Precautions on booster seats . .40, 45, 49
  Precautions on child restraints . .40, 45, 49
  Precautions on seat belt usage 21
  Precautions on supplemental restraint system 53
  Precautions when starting and driving 270, 277
ProPILOT Assist 344
Push starting 472

R

Radio
  Car phone or CB radio 263
Rain sensor 133
Rapid air pressure loss 276
Readiness for inspection maintenance (I/M) test 584
Rear Automatic Braking (RAB). 94, 392
Rear Cross Traffic Alert (RCTA) 336
Rear Door Alert 117, 155
Rear door sunshade 170
Rear power windows 169
Rear seat belt warning 120
Rear window and outside mirror defroster switch. 135
Rear window wiper and washer switches 134
Rearview mirror 214
RearView Monitor 225
  Adjusting the screen 230
Recommended Fluids. 557
Recorders
  Event Data 585, 586
Refrigerant recommendation 562
Registering a vehicle in another country .564
Remote Engine Start 198, 284
Repairing flat tire 464
Repairing tire 466
Reporting safety defects (US only) 583
Roof rack 166, 167

S

Safety
- Child safety rear door lock 187
- Child seat belts 32, 40, 45, 49
- Reporting safety defects (US only) . . .583

Seat
- Memory seat 218

Seat adjustment
- Front power seat adjustment 13

Seat belt
- Child safety 29
- Infants and small children 30
- Injured person 24
- Larger children 30
- Precautions on seat belt usage 21
- Pregnant women 24
- Seat belt extenders 28
- Seat belt maintenance 29
- Seat belts 21, 483
- Three-point type with retractor 24

Seat belt extenders 28
Seat belt warning light 24, 89
Seat massage switch 147
Seatback pockets 160
Seats
- Adjustment 12
- Armrests 15
- Front seats 12
- Heated seats 144

Security system (NISSAN Vehicle Immobilizer System), engine start . . .131, 282
Security systems
- Vehicle security system 130

Self-adjusting brakes 503
Service manual order form 587
Servicing air conditioner 262
Spark plug replacement 499
Spark plugs 499
Specifications 563
Speedometer 82, 83
Spotlights (See map light) 175
SRS warning label 74
Standard maintenance 535
Starting
- Before starting the engine 282
- Jump starting 470, 498
- Precautions when starting and driving 270, 277
- Push starting 472
- Starting the engine 283

Starting the engine 283
Startup display 98
Steering
- Heated steering wheel 146
- Power steering system 431

Steering Assist switch (for vehicles with ProPILOT Assist) 147
Steering wheel 211
Stop light 511
Storage 160
Storage tray 161
Sun visors 212
Sunglasses case 162
Sunglasses holder 162
Sunroof 481
Sunroof (see Moonroof) 171
Supplemental air bag warning labels 74
Supplemental air bag warning light . . .74, 90
Supplemental front impact air bag system 61
Supplemental restraint system
- Information and warning labels 74
- Precautions on supplemental restraint system 53

Supplemental restraint system (Supplemental air bag system) 53
Switch
- Autolight switch 137
- Automatic power window switch 169
- Hazard warning flasher switch 456
- Headlight and turn signal switch 136
- Headlight control switch 136
- Instrument brightness control 141
- Power door lock switch 186
- Rear window and outside mirror defroster switch 135
- Rear window wiper and washer switches 134
- Turn signal switch 142

T

Tachometer 84
Temperature gauge
- Engine coolant temperature gauge . . .84

Theft (NISSAN Vehicle Immobilizer System), engine start 131, 282

Three-way catalyst 270
Tire
Flat tire 457, 458
Spare tire 459, 524
Tire and Loading Information label . . .566
Tire chains 520
Tire dressing 480
Tire pressure 511
Tire rotation 521
Types of tires 519
Uniform tire quality grading 582
Wheel/tire size 563
Wheels and tires 511, 563
Tire pressure
Low tire pressure warning light 92
Tire Pressure Monitoring System (TPMS) . .271
Top tether strap child restraint 37
Towing
2-wheel drive models 475
All-wheel drive models 474
Flat towing 581
Tow truck towing 473
Towing load/specification 576
Trailer towing 572
Towing a trailer 572
Traffic Sign Recognition (TSR) 301
Transceiver
HomeLink® Universal
Transceiver 176, 178, 179, 180
Transmission
Automatic transmission fluid (ATF) . . .494
Driving with automatic transmission . .285
Travel (See registering a vehicle in
another country) 564
Turn signal switch 142

U

Underbody cleaning 479
Uniform tire quality grading 582
USB/iPod® Charging Ports 156

V

Vanity mirror 213
Variable voltage control system 498
Vehicle dimensions and weights 563
Vehicle Dynamic Control (VDC) system . .434
Vehicle identification 564
Vehicle identification number (VIN)
(Chassis number) 565
Vehicle identification number (VIN)
plate 564
Vehicle immobilizer system 131, 282
Vehicle information display 97
Vehicle loading information 568
Vehicle recovery 476
Vehicle security system 130
Vehicle security system (NISSAN Vehicle
Immobilizer System), engine start . . .131, 282
Vents 254
Visors 212

W

Walk away lock function 196
Warning
Air bag warning light 74, 90
Anti-lock brake warning light 87, 90
Battery charge warning light 88
Brake warning light 87
Engine oil pressure warning light 89
Hazard warning flasher switch 456
Low fuel warning light 94, 118
Low tire pressure warning light 92
Low windshield-washer fluid
warning light 118
Seat belt warning light 24, 89
Supplemental air bag warning
light 74, 90
Vehicle security system 130
Warning labels (for SRS) 74
Warning/indicator lights and
audible reminders 87, 90
Warning lights 87, 90
Warning lights, indicator lights and
audible reminders 86
Warning/indicator lights and audible
reminders 87, 90
Audible reminders 87, 90
Indicator lights 87, 90
Warning lights 87, 90
Washer switch
Rear window wiper and washer
switches 134

Washing 478
Waxing 479
Weights (See dimensions and weights) . .563
Wheel/tire size 563
Wheels and tires 511, 563
    Care of wheels 479
    Cleaning aluminum alloy wheels 479
When traveling or registering in
another country 564
Window(s)
    Cleaning 479
Windows 167
    Locking passengers' windows 168
    Power rear windows 169
    Power windows 167
    Rear power windows 169
Windshield Deicer 135
Windshield wiper blades 501
Windshield-washer fluid 495
Wiper
    Rear window wiper and washer
    switches 134
    Wiper blades 501
Wiper and washer switch 132
Wireless Charger 157

MEMO

MEMO

MEMO

MEMO

To view the digital NissanConnect manual, go to
www.nissanquickguide.com/#/guide/2026/murano/browse
or snap this QR code with an appropriate QR code reader.

Printing : October 2025
Publication No.: OM26EA 0Z53U1P
Printed in the U.S.A.

Z53-D