Foreword

Welcome to the growing group of value- conscious people who drive Toyotas. We are proud of the advanced engineering and quality construction of each vehicle we build.

This Owner's Manual explains the features of your new Toyota. Please read it and follow the instructions carefully so that you can enjoy many years of safe motoring.

When it comes to service, remember that your Toyota dealer knows your vehicle best and is interested in your complete satisfaction. He will provide quality maintenance and any other assistance you may require.

Please leave this Owner's Manual in this vehicle at the time of resale. The next owner will need this information also.

All information and specifications in this manual are current at the time of printing. However, because of Toyota's policy of continual product improvement, we reserve the right to make changes at any time without notice.

Please note that this manual applies to all models and explains all equipment, including options. Therefore, you may find some explanations for equipment not installed on your vehicle.

TOYOTA MOTOR CORPORATION

© 1996 TOYOTA MOTOR CORPORATION

All rights reserved. This material may not be reproduced or copied, in whole or in part, without the written permission of Toyota Motor Corporation.

New vehicle warranty

Your new vehicle is covered by the following Toyota limited warranties:

- New vehicle warranty
- Emission control systems warranty
- Others

For further information, please refer to the separate “Owner’s Guide”, “Owner’s Manual Supplement” or “Warranty Booklet”.

Your responsibility for maintenance

It is the owner’s responsibility to make sure that the specified maintenance is performed. Part 6 gives details of these maintenance requirements. Also included in Part 6 is general maintenance. For scheduled maintenance information, please refer to the separate “Owner’s Manual Supplement/Maintenance Schedule”.

Accessories, spare parts and modification of your Toyota

A wide variety of non genuine spare parts and accessories for Toyota vehicles are currently available in the market. You should know that Toyota does not warrant these products and is not responsible either for their performance, repair or replacement, or for any damage they may cause to, or adverse effect they may have on, your Toyota vehicle.

This vehicle should not be modified with non genuine Toyota products. Modification with non genuine Toyota products could affect its performance, safety or durability, and may even violate governmental regulations. In addition, damage or performance problems resulting from the modification may not be covered under warranty.

Spark ignition system of your Toyota

The spark ignition system in your Toyota meets all requirements of the Canadian Interference-Causing Equipment Standard.

Installation of a mobile two-way radio system

As the installation of a mobile two-way radio system in your vehicle could affect electronic systems such as multiport fuel injection system/sequential multiport fuel injection system, cruise control system, anti-lock brake system and SRS airbag system, be sure to check with your Toyota dealer for precautionary measures or special instructions regarding installation.

Scrapping of your Toyota

The SRS airbag devices in your Toyota contains explosive chemicals. If the vehicle is scrapped with the airbags left as they are, it may cause an accident such as a fire. Be sure to have the SRS airbag system removed and disposed of by a qualified service shop or by your Toyota dealer before you dispose of your vehicle.

Part 1
OPERATION OF INSTRUMENTS AND CONTROLS—

Chapter 1-1
Overview of instruments and controls

- Instrument panel overview
- Instrument cluster overview
- Indicator symbols on the instrument panel

Instrument panel overview

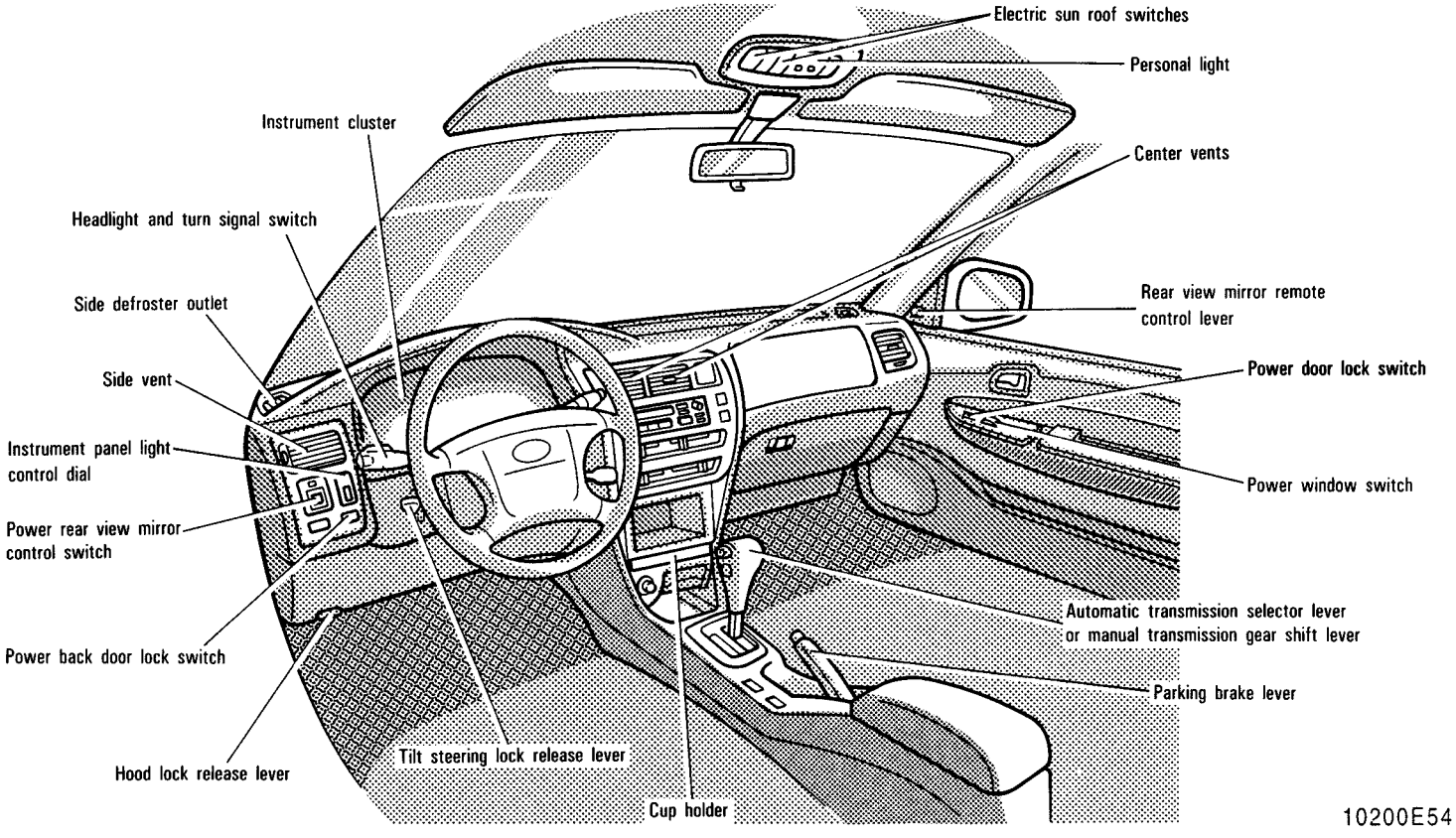

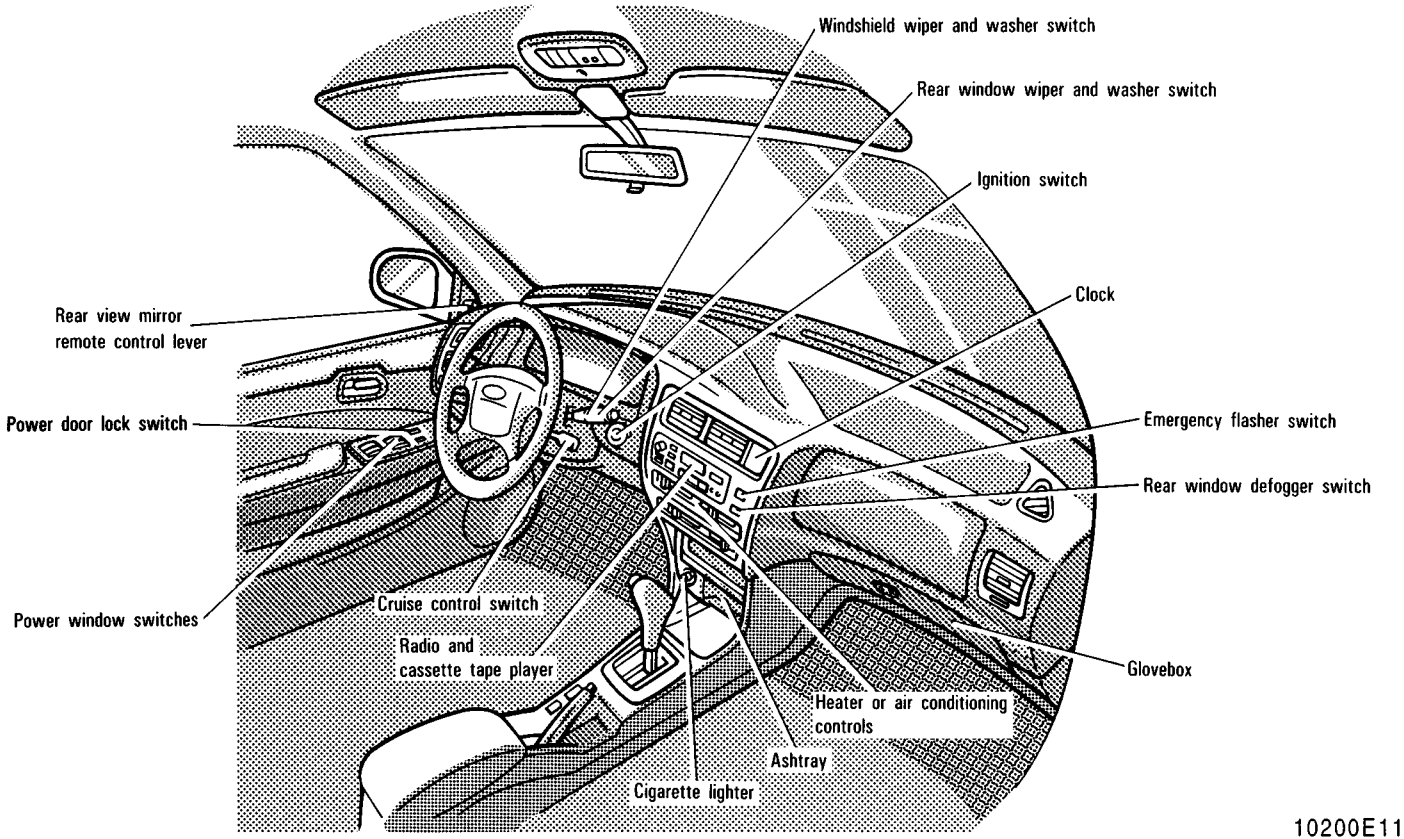
Windshield wiper and washer switch
Rear window wiper and washer switch
Ignition switch
Clock
Emergency flasher switch
Rear window defogger switch
Glovebox
Heater or air conditioning controls
Ashtray
Cigarette lighter
Radio and cassette tape player
Cruise control switch
Power window switches
Power door lock switch
Rear view mirror remote control lever
10200E11

Instrument cluster overview

Without tachometer

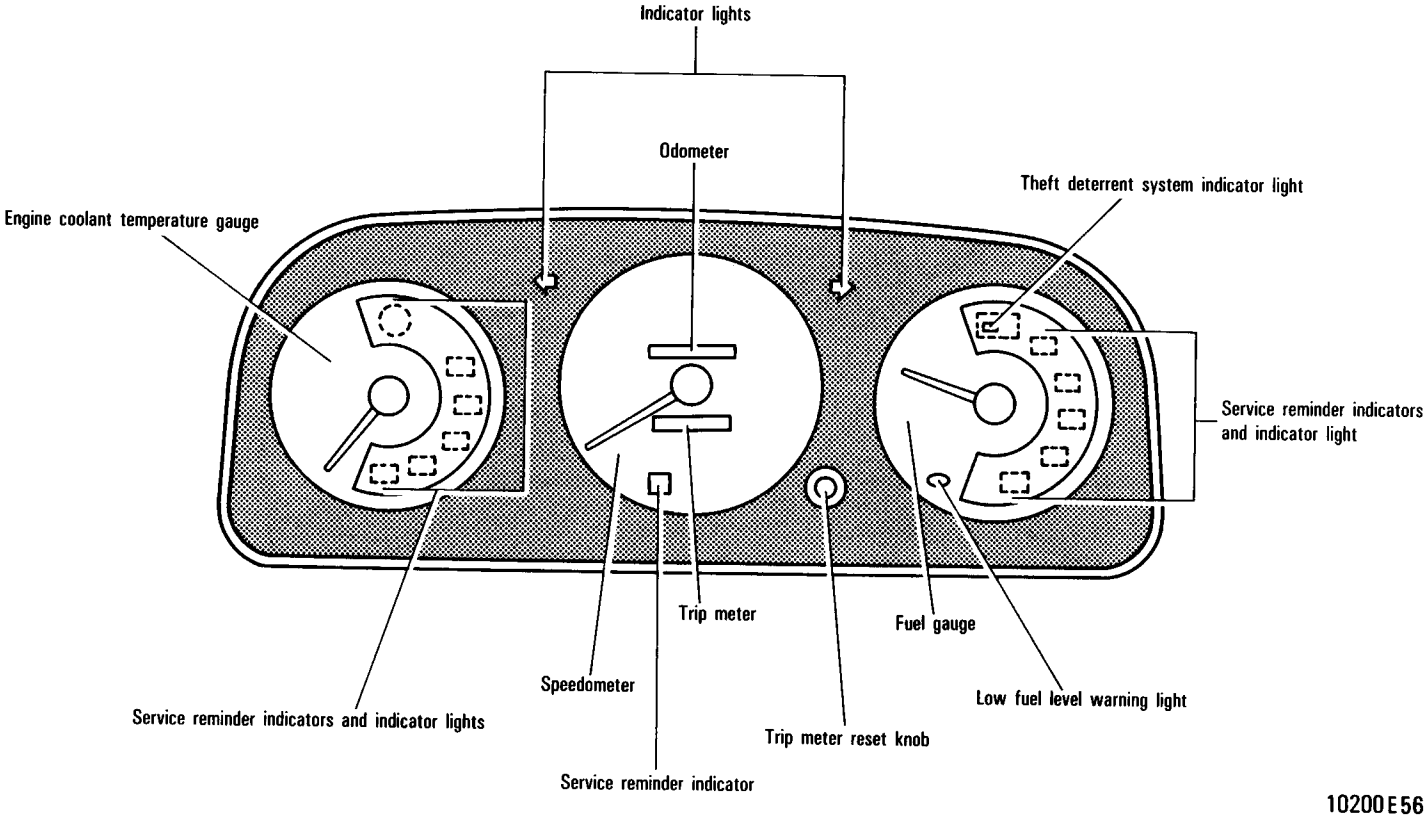

With tachometer

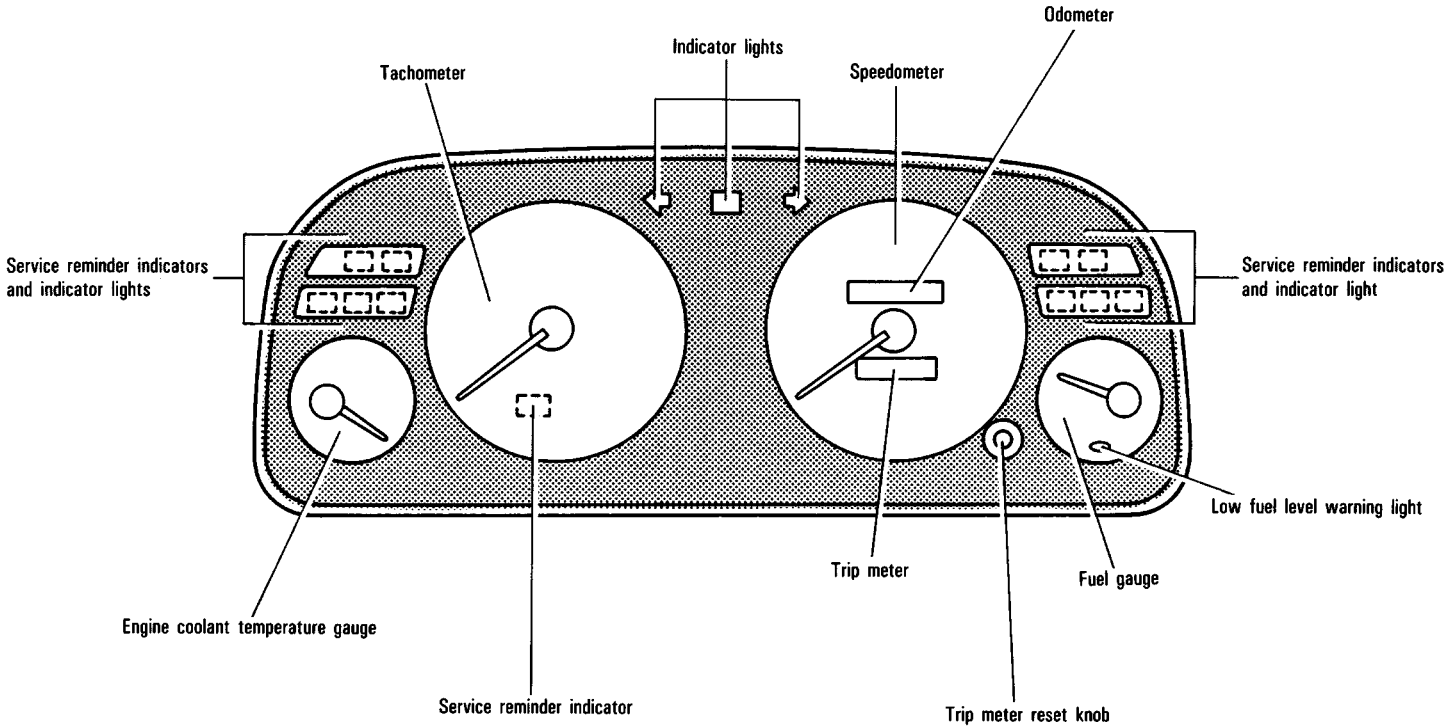

10200E55

Indicator symbols on the instrument panel

BRAKE (type A) (type B)	Brake system warning light *1
	Seat belt reminder light*1
	Discharge warning light*1
	Low oil pressure warning light*1
CHECK	Malfunction indicator lamp*1
ABS (type A) (type B)	Anti-lock brake system warning light *1

	Open door warning light*1
	SRS airbag warning light*1
	Turn signal indicator lights
	Headlight high beam indicator light
O/D OFF	Overdrive-of f indicator light
CRUISE	Cruise control indicator light*2
	Rear window defogger indicator light

*1: For details, see “Service reminder indicators and warning buzzers” in Chapter 1-5.

*2: If this light flashes, see “Cruise control” in Chapter 1-6.

Part 1

OPERATION OF INSTRUMENTS AND CONTROLS—

Chapter 1-2
Keys and Doors

- Keys
- Side doors
- Power windows
- Trunk lid
- Back door
- Hood
- Theft deterrent system
- Fuel tank cap
- Electric sun roof

Keys (sedan)

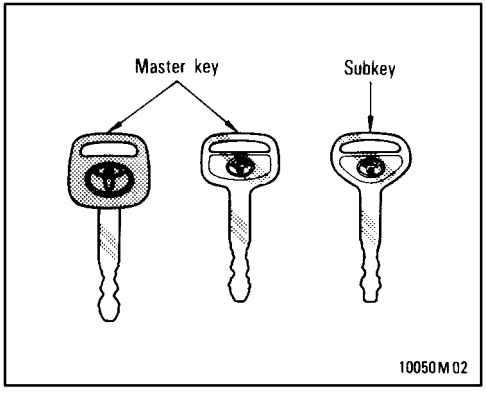

The master key works in every lock. The subkey will not work in the trunk.

To protect things locked in the trunk when you have your vehicle parked, leave the subkey with the attendant.

Since the doors and trunk lid can be locked without a key, you should always carry a spare master key in case you accidentally lock your keys inside the vehicle.

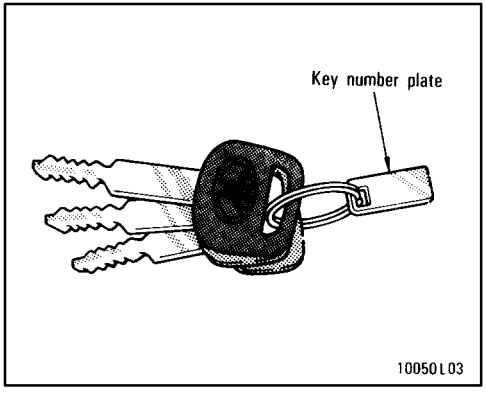

Keep the key number plate in a safe place such as your wallet, not in the vehicle.

If you should lose your keys or if you need additional keys, duplicates can be made by a Toyota dealer using the key number.

You should also put a copy of the key number with your important papers.

Keys (wagon)

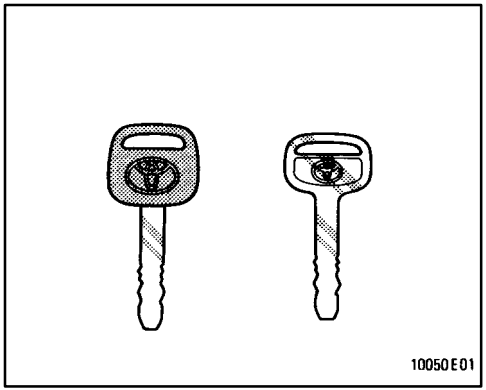

The key works in every lock.

Since the side doors and back door can be locked without a key, you should always carry a spare master key in case you accidentally lock your key inside the vehicle.

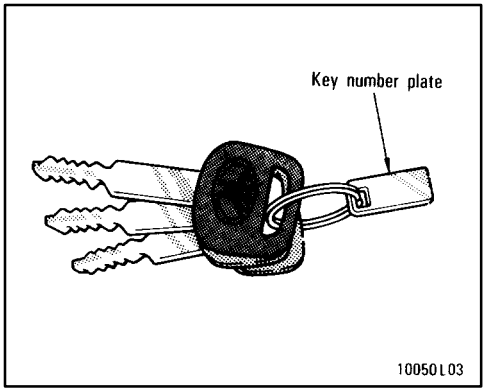

Keep the key number plate in a safe place such as your wallet, not in the vehicle.

If you should lose your keys or if you need additional keys, duplicates can be made by a Toyota dealer using the key number.

You should also put a copy of the key number with your important papers.

Side doors

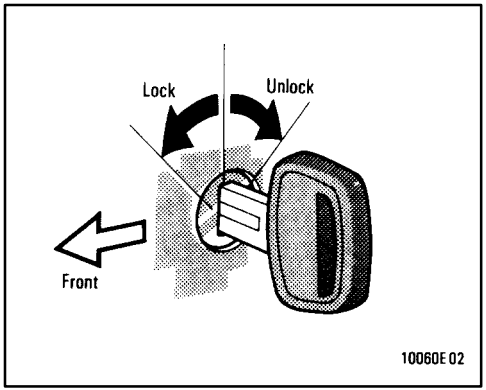

LOCKING WITH KEY

Turn the key towards the front of the vehicle to lock and towards the back to unlock.

Vehicles with power door lock system—All the side doors and back door lock and unlock simultaneously with either front door. In the driver's door lock, turning the key once will unlock the driver's door and twice in succession will unlock all the side doors and back door simultaneously.

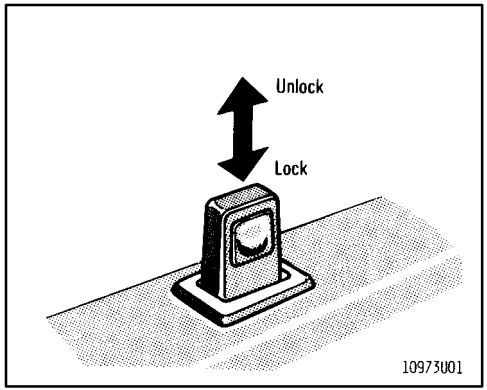

LOCKING WITH INSIDE LOCK BUTTON

Push in the lock button to lock and pull it out to unlock.

Closing the door with the lock button pushed in will also lock the door. Be careful not to lock your keys in the vehicle.

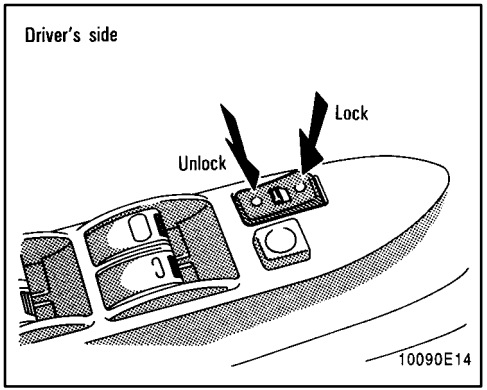

LOCKING WITH POWER DOOR LOCK SWITCH

To lock all the side doors simultaneously, push the switch on the LOCK side. Pushing on the UNLOCK side will unlock them.

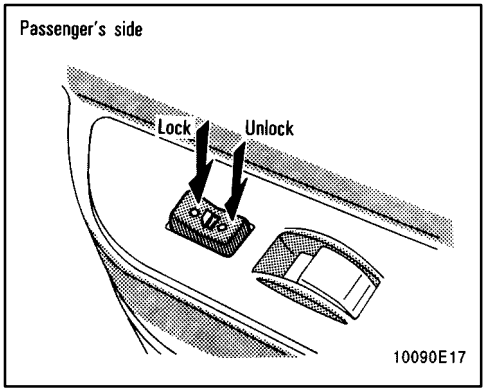

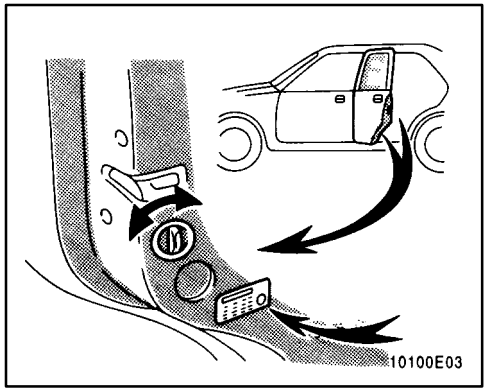

LOCKING WITH REAR DOOR CHILD-PROTECTOR

Turn the lock knob to the "LOCK" position as shown on the label.

This feature allows you to lock a rear door so it can be opened from the outside only, not from inside. We recommend using this feature whenever small children are in the vehicle.

CAUTION

Before driving, be sure that the doors are closed and locked, especially when small children are in the vehicle. Along with the proper use of seat belts, locking the doors helps prevent the driver and passengers from being thrown out from the vehicle during an accident. It also helps prevent the doors from being opened unintentionally.

Power windows

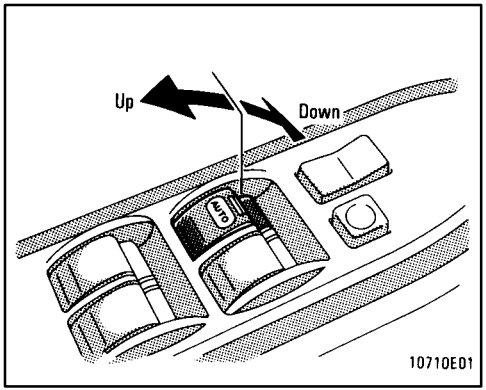

The windows can be operated with the switch on each door.

The ignition key must be in the "ON" position.

OPERATING THE DRIVER'S WINDOW

Use the switch on the driver's door.

Normal operation: The window moves as long as you hold the switch.

To open: Lightly push down the switch.

To close: Pull up the switch.

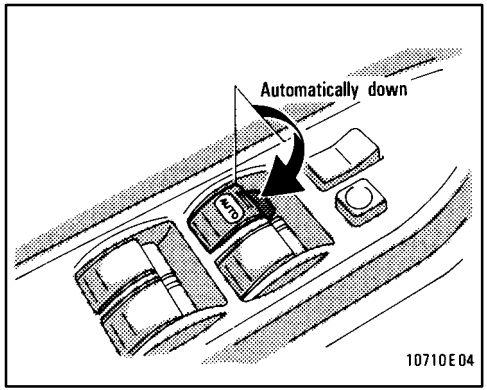

Automatic operation (to open only):

Push the switch completely down and then release it. The window will fully open. To stop the window partway, lightly pull the switch up and then release it.

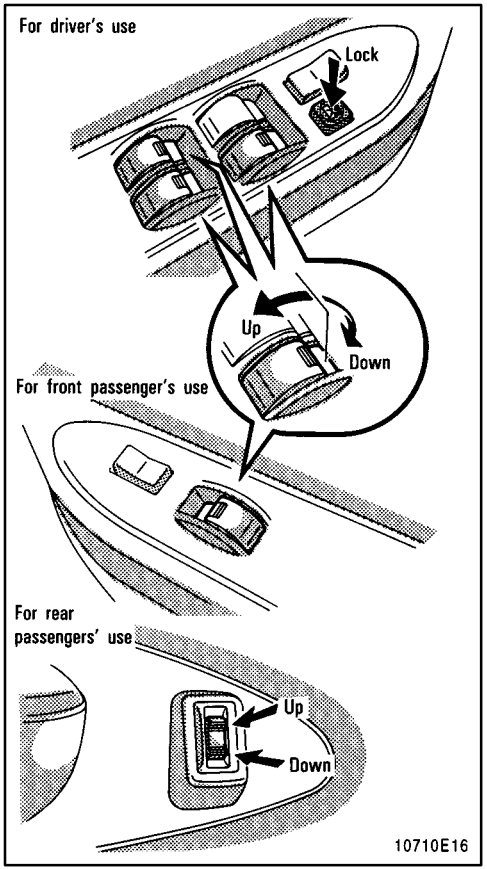

OPERATING THE PASSENGERS' WINDOWS

Use the switch on each passenger's door or the switch on the driver's door that control each passenger's window.

The window moves as long as you hold the switch.

For driver and front passenger's use—

To open: Push down the switch.

To close: Pull up the switch.

For rear passengers' use-

To open: Push on the lower side of the switch.

To close: Push on the upper side of the switch.

If you push in the window lock button on the driver's door, the passenger's windows cannot be operated.

CAUTION

To avoid serious personal injury, you must do the following.

- **Always make sure the head, hands and other parts of the body of all occupants are kept completely inside the vehicle before you close the power windows. If someone's neck, head or hands gets caught in a closing window, it could result in a serious injury. When anyone closes the power windows, be sure that they operate the windows safely.**
- **When small children are in the vehicle, never let them use the power window switches without supervision. Use the window lock button to prevent them from making unexpected use of the switches.**
- **Never leave small children alone in the vehicle, especially with the ignition key still inserted. They could use the power window switches and get trapped in a window. Unattended children can become involved in serious accidents.**

Trunk lid (sedan)—

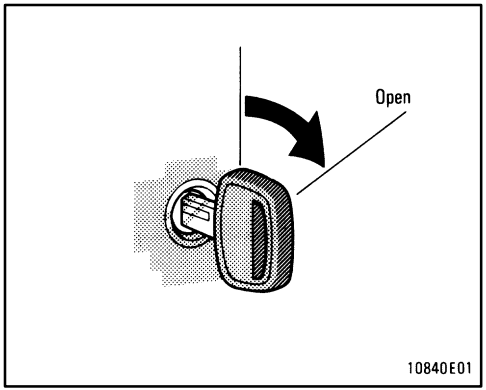

To open the trunk lid from the outside, insert the master key and turn it clockwise.

See "Luggage stowage precautions" in Part 2 for precautions to observe in loading luggage.

To close the trunk lid, lower it and press down on it. After closing the trunk lid, try pulling it up to make sure it is securely closed.

CAUTION

Keep the trunk lid closed while driving. This not only keeps the luggage from being thrown out but also prevents exhaust gases from entering the vehicle.

—Lock release lever

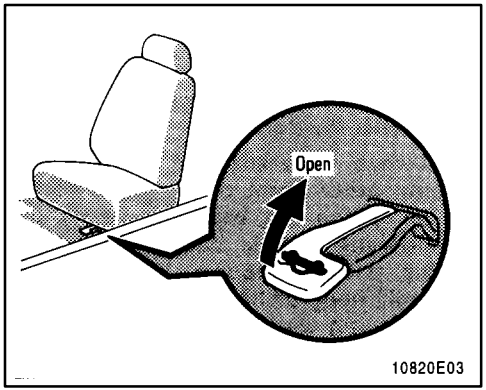

To open the trunk lid from the driver's seat, pull up on the lock release lever.

—Luggage security system (with fold-down rear seat)

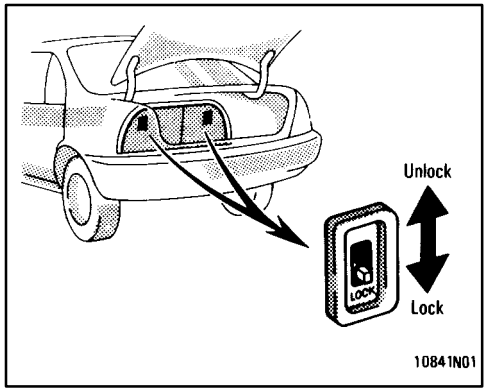

This system deactivates the lock release lever so that things locked in the trunk can be protected.

1. Push down the security lock levers to lock the rear seatbacks.

On vehicles with built-in child restraint, only the left seatback has a lock lever and can be lowered. The right seatback cannot be folded down.

After locking the rear seatbacks, try folding them down to make sure they are securely locked, otherwise, someone could get into the trunk by folding down a rear seat.

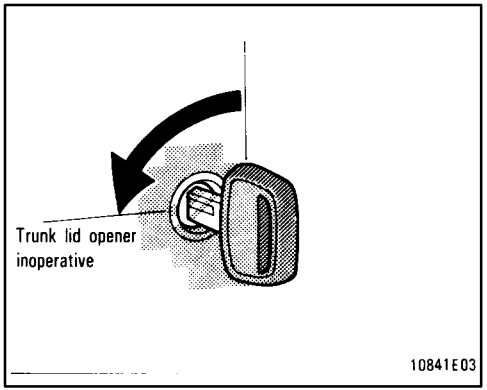

2. After closing the trunk lid, insert the master key and turn it counterclockwise to deactivate the lock release lever.

After closing the trunk lid, try pulling it up to make sure it is securely locked.

—Luggage security system (without fold-down rear seat)

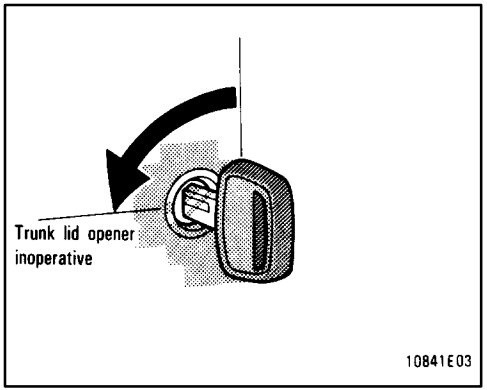

This system deactivates the lock release lever so that things locked in the trunk can be protected.

After closing the trunk lid, insert the master key and turn it counterclockwise to deactviate the lock release lever.

After closing the trunk lid, try pulling it up to make sure it is securely closed.

Back door (wagon)—

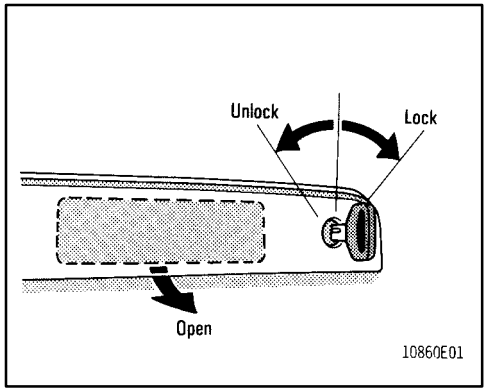

To open the back door from the outside, insert the key and turn it counterclockwise to unlock. Then pull the handle and raise the back door.

See “Luggage stowage precautions” in Part 2 for precautions to observe in loading luggage.

To close the back door, lower it and press down on it. After closing the back door, try pulling it up to make sure it is securley closed.

CAUTION

Keep the back door closed while driving. This not only keeps the luggage from being thrown out but also prevents exhaust gases from entering the vehicle.

—Locking with power back door lock

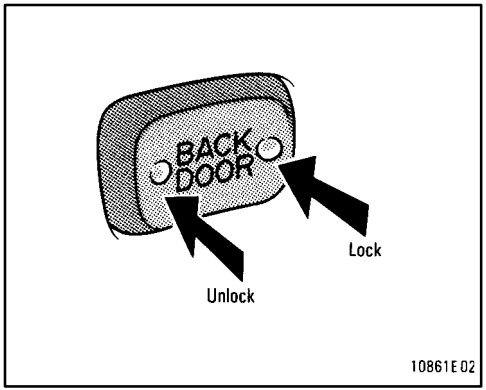

To lock the back door, push the switch on the LOCK side. To unlock the back door, push the switch on the UNLOCK side.

You can, of course, lock and unlock the back door manually.

Hood

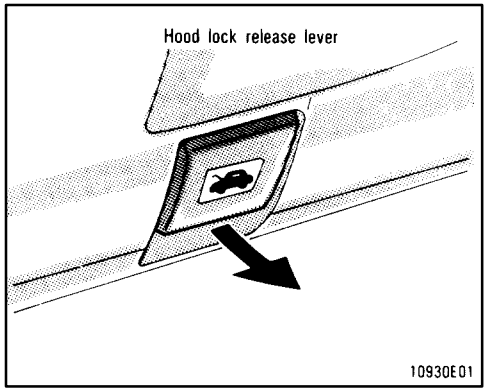

To open the hood, pull the hood lock release lever under the dash. The hood will spring up slightly. In front of the vehicle, press up on the auxiliary catch lever and lift the hood. Then hold the hood open by inserting the support rod into the slot.

Before closing the hood, check to see that you have not forgotten any tools, rags, etc. and return the support rod to its clip—this prevents rattles. Then lower the hood and make sure it locks into place. If necessary, press down gently on the front edge to lock it.

CAUTION

After inserting the rod, make sure it supports the hood securely.

Theft deterrent system

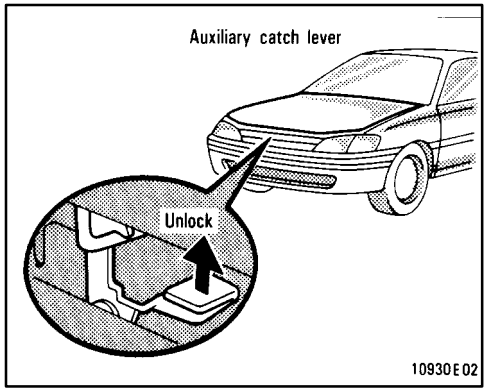

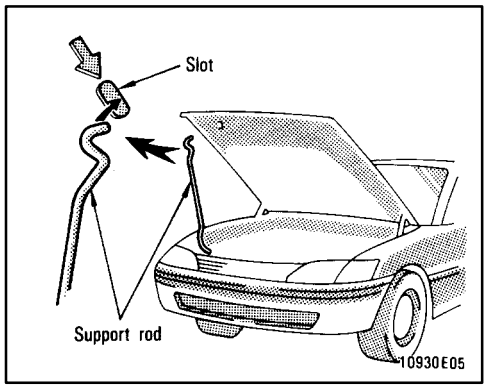

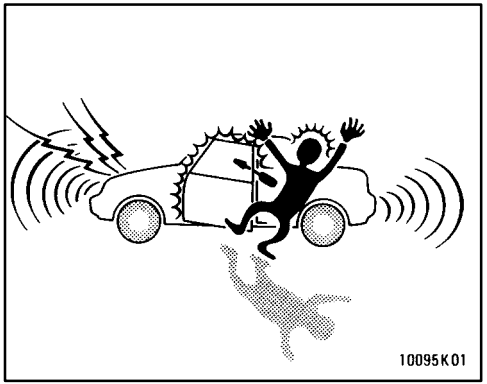

To deter the vehicle theft, the system is designed to give an alarm and keep the engine from being started if any of the side doors, trunk lid, back door or hood is forcibly unlocked or the battery terminal is disconnected and then reconnected when the vehicle is locked.

The alarm blows the horn intermittently and flashes the headlights, tail lights and other exterior lights. The engine cannot be started because the starter circuit will be cut.

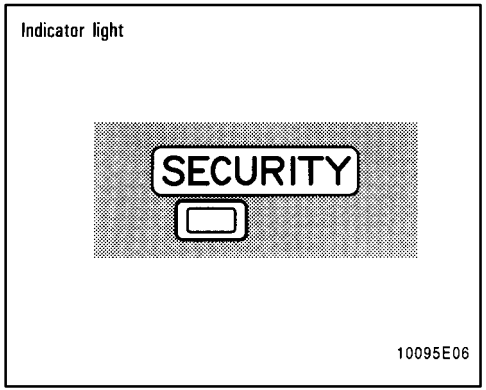

SETTING THE SYSTEM

1. Turn the ignition key to the ”LOCK” position.
2. Have all passengers get out of the vehicle.
3. Close and lock all the side doors, trunk lid, back door and hood.

The indicator light will come on when all the side doors, trunk lid, back door and hood are closed and locked.

As the side doors are locked, the system will give you a preparation time of 30 seconds before the setting, during which the side doors, trunk lid, back door and hood may be opened to prepare for the setting.

Be careful not to use the key when opening either front door. This will cancel the system.

4. After making sure the indicator light starts flashing, you may leave the vehicle.

The system will automatically be set after the preparation time passes. The indicator light will flash to show the system is set. If any of the side doors, trunk lid, back door or hood is open at that time, the setting is interrupted until it is closed and locked.

Never leave anyone in the vehicle when you set the system, because unlocking from the inside will activate the system.

WHEN THE SYSTEM IS SET

Activating the system

The system will give the alarm and cut the starter circuit under the following conditions:

- If any of the side doors, trunk lid, back door or hood is unlocked without using the key
- If the battery terminal is disconnected and then reconnected

After 1 minute, the alarm will automatically stop with the starter circuit cut kept on.

Reactivating the alarm

Once set, the system automatically resets the alarm each time alll the side doors, trunk lid, back door and hood are closed after the alarm stops.

The alarm will be activated again under the following conditions:

- If any of the side doors, trunk lid, back door or hood is opened
- If the battery terminal is disconnected and then reconnected

Stopping the alarm

Turn the igniion key from the ”LOCK” to ”ACC” position. The alarm will be stopped with the starter circuit cut kept on. Stopping the alarm in this manner will keep the alarm from being reactivated when any of the side doors, trunk lid, back door or hood is opened.

Interrupting the setting

With the system set, the trunk and back door can be opened with the key without activating or cancelling the system. While it is open, the side doors and hood may be opened in addition. However, when the battery terminal is disconnected and then reconnected, the system is activated.

To resume the setting, close and lock the side doors, trunk, back door and hood. The trunk and back door must be closed with the key removed.

CANCELLING THE SYSTEM

Unlock either front door with the key. This cancels the system completely and the starter circuit cut will be cancelled at once.

INDICATOR LIGHT

The indicator light gives the following three indications.

FLASHING—The system is set. You need the key to open the side doors, trunk lid , back door and hood.

ON—The system will automatically be set when the time comes. The side doors, trunk lid, back door and hood may be opened without a key.

OFF—The system is inactive. You may open any of the side doors, trunk lid, back door or hood.

TESTING THE SYSTEM

1. Open all the windows.
2. Set the system as described above. The front doors should be locked with the key. Be sure to wait until the indicator light starts flashing.
3. Unlock one of the side doors from the inside. The system should activate the alarm.
4. Cancel the system by unlocking either front door with the key.
5. Repeat this operation for the other side doors, trunk lid, back door and hood. When testing on the hood, also check that the system is activated when the battery terminal is disconnected and then reconnected.

If the system does not work properly, have it checked by your Toyota dealer.

Fuel tank cap

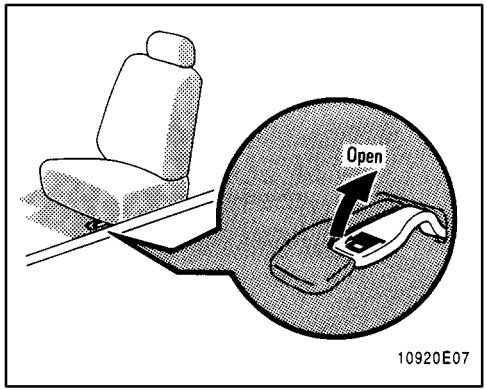

1. To open the fuel filler door, pull the lever up.

CAUTION

- **Do not smoke, cause sparks or allow open flames when refuelling. The fumes are flammable.**
- **When opening the cap, do not remove the cap quickly. In hot weather, fuel under pressure could cause injury by spraying out of the filler neck if the cap is suddenly removed.**

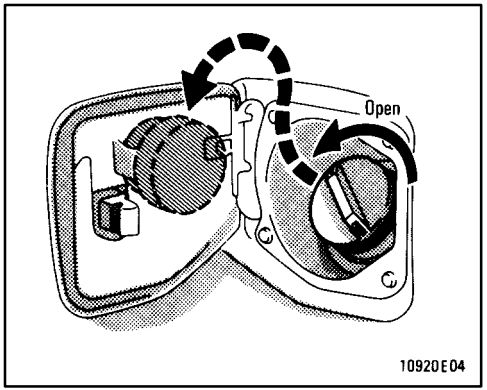

2. To remove the fuel tank cap, turn the cap slowly counterclockwise, then pause slightly before removing it. After removing the cap, hang it on the cap hanger.

It is not unusual to hear a slight swoosh when the cap is opened. When installing, turn the cap clockwise till you hear a click.

CAUTION

- **Make sure the cap is tightened securely to prevent fuel spillage in case of an accident.**
- **Use only a genuine Toyota fuel tank cap for replacement. It has a built in check valve to reduce fuel tank vacuum.**

Electric sun roof

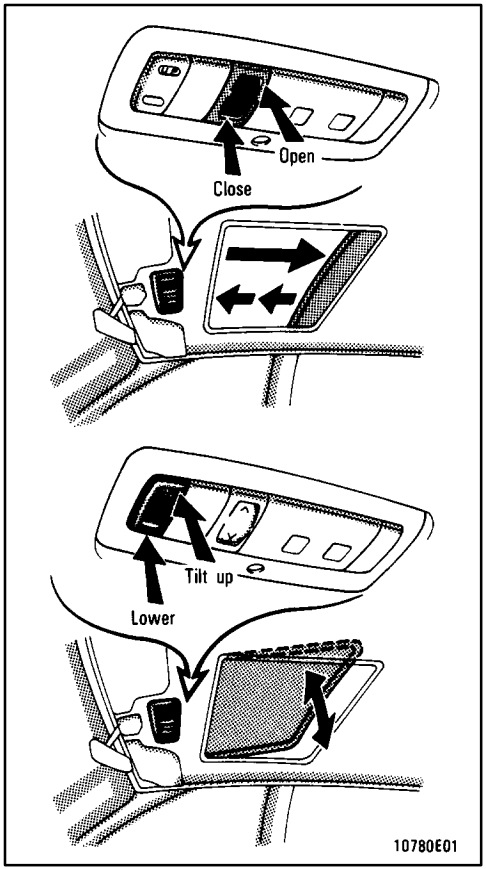

To open the sun roof, push the switch on the "SLIDE" side. Pushing on the opposite side will close it. To tilt up the rear end of the sun roof, push the switch on the "UP" side. Pushing on the opposite side will lower it.

The ignition key must be in the "ON" position.

The sun roof will move while the switch is being pushed and stop when released. However, as a precaution when closing, it stops at the three-quarters closed position before fully closing. Therefore, release the switch and then push it again to close it completely.

You may open the sun roof to any desired position.

CAUTION

To avoid serious personal injury, you must do the following.

- **While the vehicle is moving, always keep the head, hands and other parts of the body of all occupants away from the roof opening. Otherwise, you could be seriously injured if the vehicle stops suddenly or if the vehicle is involved in an accident.**
- **Always make sure nobody places his/her head, hands and other parts of the body in the roof opening before you close the roof. If someone's neck, head or hands gets caught in the closing roof, it could result in a serious injury. When anyone closes the roof, first make sure it is safe to do so.**
- **Never leave small children alone in the vehicle, especially with the ignition key still inserted. They could use the sun roof switches and get trapped in the roof opening. Unattended children can become involved in serious accidents.**
- **Never sit on top of the vehicle around the roof opening.**

Part 1

OPERATION OF INSTRUMENTS AND CONTROLS—

Chapter 1-3

Seats, Seat belts, Steering wheel and Mirrors

- Seats
- Front seats
- Fold-down rear seat
- Head restraints
- Seat belts
- SRS airbags
- Child restraint
- Tilt steering wheel
- Outside rear view mirrors
- Anti-glare inside rear view mirror

Seats

While the vehicle is being driven, all vehicle occupants should have the seatback upright, sit well back in the seat and properly wear the seat belts provided.

CAUTION

- **Do not drive with the vehicle occupants not properly seated, such as sitting on top of a folded-down seatback, or in the luggage compartment. Persons not properly seated and restrained by seat belts can be severely injured in the event of emergency braking or a collision.**
- **During driving, do not let passengers stand up or move around between seats. Balance can be unsteady and severe injuries can occur in the event of emergency braking or a collision.**

Front seats—
—Seat adjustment precautions

Adjust the driver's seat so that the foot pedals, steering wheel and instrument panel controls are within easy reach of the driver.

CAUTION

- **Adjustments should not be made while the vehicle is moving, as the seat may unexpectedly move and cause the driver to lose control of the vehicle.**
- **When adjusting the seat, be careful not to hit the seat against a passenger or luggage.**
- **After adjusting the seat position, try sliding it forward and backward to make sure it is locked in position.**
- **After adjusting the seatback, exert body pressure to make sure it is locked in position.**
- **Do not put objects under the seats as they may interfere with the seat-lock mechanism or unexpectedly push up the seat position adjusting lever; the seat may suddenly move, causing the driver to lose control of the vehicle.**
- **While adjusting the seat, do not put your hands under the seat or near the moving parts. You may jam your hands or fingers.**

-Adjusting front seats

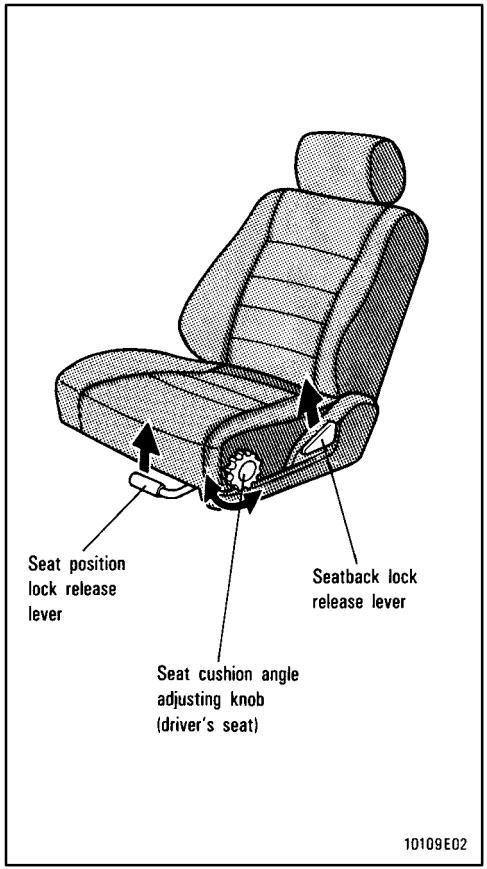

ADJUSTING SEAT POSITION

Pull the lock release lever up. Then slide the seat to the desired position with slight body pressure and release the lever.

ADJUSTING SEATBACK ANGLE

Lean forward and pull the lock release lever. Then lean back to the desired angle and release the lever.

⚠ CAUTION

To reduce the risk of sliding under the lap belt during a collision, avoid reclining the seatback any more than needed. The seat belts provide maximum protection when the driver and the passenger are sitting up straight and well back in the seats. If you are reclined, the lap belt may slide past your hips and apply restraint forces directly to the abdomen. Therefore, in the event of a frontal collision, the risk of personal injury may increase with increasing recline of the seatback.

ADJUSTING DRIVER'S SEAT CUSHION ANGLE

Turn the knob either way.

Fold–down rear seat (sedan)

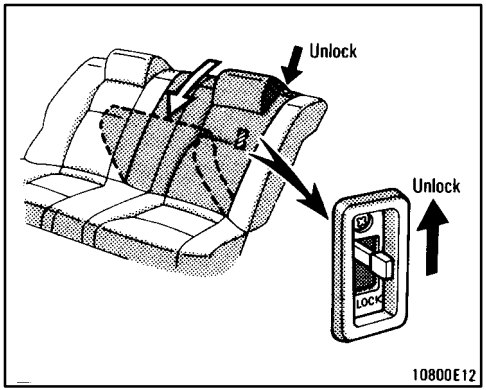

Unlock the seatback, and fold it down.

This will enlarge the luggage compartment as far as the front seatbacks. See "Luggage stowage precautions" in Part 2 for precautions to observe in loading luggage.

If desired, each seatback may be folded separately. On vehicles with built-in child restraint, only the left seatback can be folded down.

CAUTION

When returning the seatback to the upright position:

- **Make sure the seat belts are not twisted or caught in the seatback and are arranged in their proper position for ready use.**
- **Make sure the seatback is securely locked by pushing forward and rearward on the top of the seat-back.**

Fold-down rear seat (wagon)

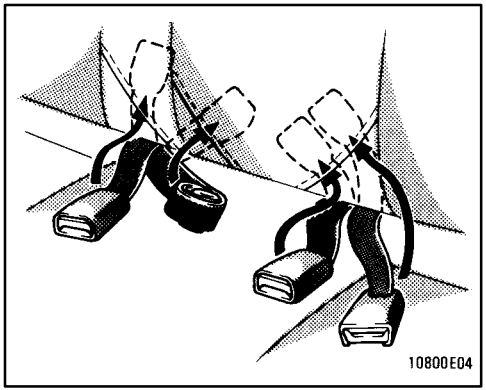

BEFORE FOLDING REAR SEAT

Stow the rear seat belts as shown in the illustration.

This prevents the belts from falling out when you fold the seatback.

NOTICE

The seat belts must be stowed before you fold the seatback.

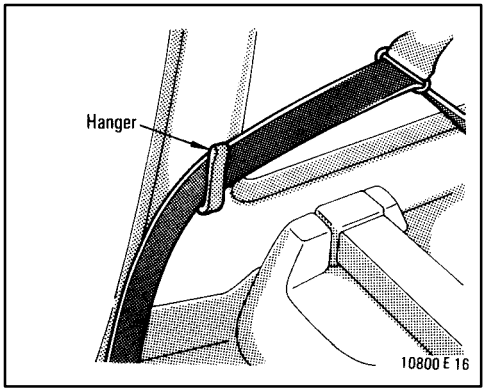

Make sure the shoulder belt passes through the hanger when folding the seatback down.

This prevents the shoulder belt from being damaged.

Also take due care to avoid catching the shoulder belt in the rear seatback when returning it to the upright position.

CAUTION

Seat belt must be removed from the hanger when seat belt is in use.

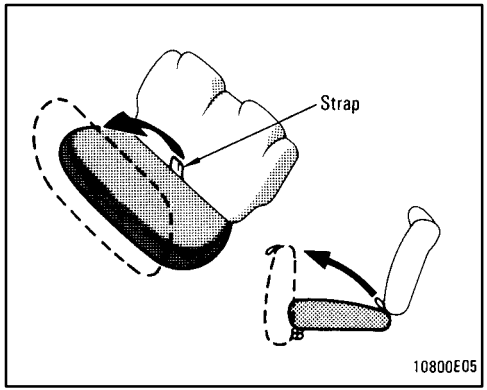

FOLDING REAR SEAT

1. Swing the bottom cushion up by pulling the strap.

It is hinged at the front edge, so just lift it up.

CAUTION

When returning the bottom cushion to its original position:

- **Make sure the seat belts are not twisted or caught under the bottom cushion and are arranged in their proper position for ready use.**
- **Make sure the bottom cushion is securely locked by trying to pull up the edge of the cushion near the strap.**

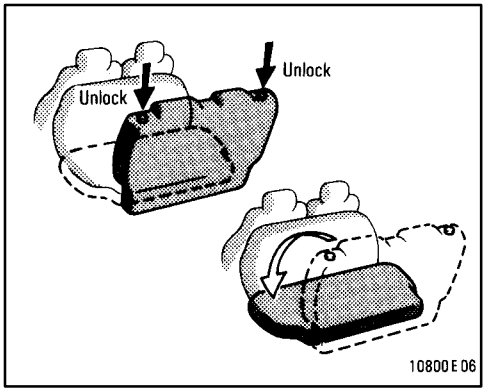

2. Unlock the seatback, and fold it down while pushing the bottom cushion forward.

This will enlarge the luggage compartment as far as the raised seat cushion. See “Luggage stowage precautions” in Part 2 for precautions to observe in loading luggage.

If desired, each seatback may be folded separately.

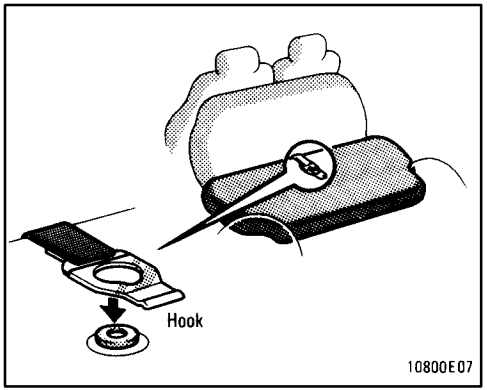

3. After folding the seatback down, hook the strap to the tab on the reverse side of the seatback.

CAUTION

When returning the seatback to the upright position:

- **Make sure the seat belts are not twisted or caught in the seatback and are arranged in their proper position for ready use.**
- **Make sure the seatback is securely locked by pushing forward and rearward on the top of the seatback.**

Head restraints

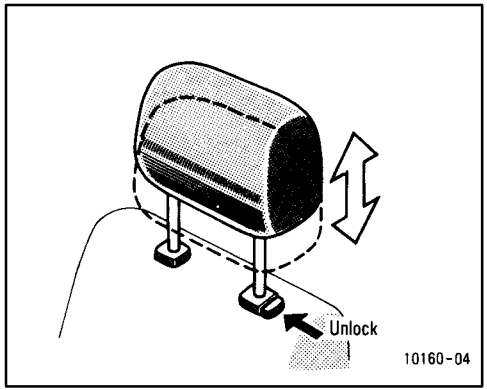

To raise the head restraint, pull it up. To lower it, press the lock release button and push the head restraint down.

The head restraint is most effective when it is close to your head. Therefore, using a cushion on the seatback is not recommended.

CAUTION

- **Adjust the top of the head restraint so that it is closest to the top of your ears.**
- **After adjusting the head restraint, make sure it is locked in position.**
- **Do not drive with the head restraints removed.**

Seat belts—
—Seat belt precautions

Toyota recommends that the driver and passengers in the vehicle be properly restrained at all times with the seat belts provided. Failure to do so could increase the chance of injury and/or the severity of injury in accidents.

Baby or small child. Use a child restraint system which fits your vehicle. See “Child restraint” for details.

Child. If a child is too large for a child restraint system, the child should sit in the rear seat and must be restrained using the vehicle’s seat belt. According to accident statistics, the child is safer when properly restrained in the rear seat than in the front seat. Do not allow the child to stand up or kneel on either rear or front seats. If the shoulder belt falls across the child’s neck or face, move the child to the center position and use the center lap belt.

Pregnant woman. Toyota recommends the use of a seat belt. Ask your doctor for specific recommendations. The lap belt should be worn securely and as low as possible over the hips and not on the waist.

Injured person. Toyota recommends the use of a seat belt. Depending on the injury, first check with your doctor for specific recommendations.

CAUTION

Persons should ride in their seats properly wearing their seat belts whenever the vehicle is moving. Otherwise, they are much more likely to suffer serious bodily injury in the event of sudden braking or a collision.

When using the seat belts, observe the following:

- **Use the belt for only one person at a time. Do not use a single belt for two or more people—even children.**
- **Avoid reclining the seatbacks too much. The seat belts provide maximum protection when the seatbacks are in the upright position. (See the seat adjustment instructions.)**
- **Be careful not to damage the belt webbing or hardware. Take care that they do not get caught or pinched in the seat or doors.**

Head restraints

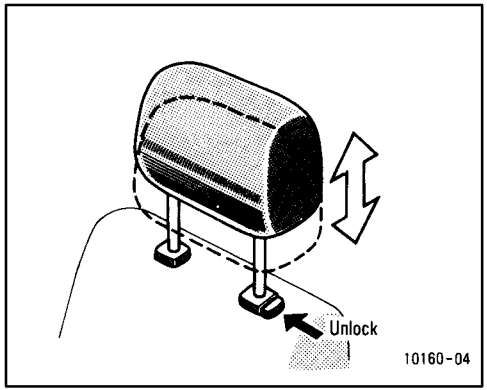

To raise the head restraint, pull it up. To lower it, press the lock release button and push the head restraint down.

The head restraint is most effective when it is close to your head. Therefore, using a cushion on the seatback is not recommended.

CAUTION

- **Adjust the top of the head restraint so that it is closest to the top of your ears.**
- **After adjusting the head restraint, make sure it is locked in position.**
- **Do not drive with the head restraints removed.**

Seat belts—
—Seat belt precautions

Toyota recommends that the driver and passengers in the vehicle be properly restrained at all times with the seat belts provided. Failure to do so could increase the chance of injury and/or the severity of injury in accidents.

Baby or small child. Use a child restraint system which fits your vehicle. See “Child restraint” for details.

Child. If a child is too large for a child restraint system, the child should sit in the rear seat and must be restrained using the vehicle’s seat belt. According to accident statistics, the child is safer when properly restrained in the rear seat than in the front seat. Do not allow the child to stand up or kneel on either rear or front seats. If the shoulder belt falls across the child’s neck or face, move the child to the center position and use the center lap belt.

Pregnant woman. Toyota recommends the use of a seat belt. Ask your doctor for specific recommendations. The lap belt should be worn securely and as low as possible over the hips and not on the waist.

Injured person. Toyota recommends the use of a seat belt. Depending on the injury, first check with your doctor for specific recommendations.

CAUTION

Persons should ride in their seats properly wearing their seat belts whenever the vehicle is moving. Otherwise, they are much more likely to suffer serious bodily injury in the event of sudden braking or a collision.

When using the seat belts, observe the following:

- **Use the belt for only one person at a time. Do not use a single belt for two or more people—even children.**
- **Avoid reclining the seatbacks too much. The seat belts provide maximum protection when the seatbacks are in the upright position. (See the seat adjustment instructions.)**
- **Be careful not to damage the belt webbing or hardware. Take care that they do not get caught or pinched in the seat or doors.**

- **Inspect the belt system periodically. Check for cuts, fraying, and loose parts. Damaged parts should be replaced. Do not disassemble or modify the system.**
- **Keep the belts clean and dry. If they need cleaning, use a mild soap solution or lukewarm water. Never use bleach, dye, or abrasive cleaners—they may severely weaken the belts.**
- **Replace the belt assembly (including bolts) if it has been used in a severe impact. The entire assembly should be replaced even if damage is not obvious.**

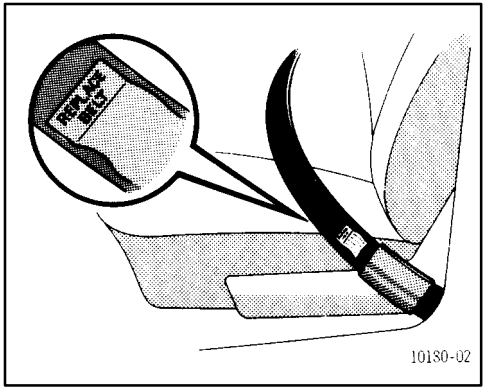

- **Replace the front seat belt if the warning label under the sleeve can be seen. The warning label, "REPLACE BELT", will appear if the belt receives a severe impact or other force.**

—Front seat belts and rear outside seat belts

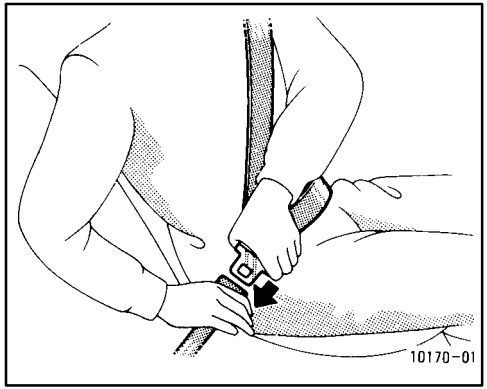

Adjust the seat as needed (front seats only) and sit up straight and well back in the seat. To fasten your belt, pull it out of the retractor and insert the tab into the buckle.

You will hear a click when the tab locks into the buckle.

The seat belt length automatically adjusts to your size and the seat position.

The retractor will lock the belt during a sudden stop or on impact. It also may lock if you lean forward too quickly. A slow, easy motion will allow the belt to extend, and you can move around freely.

If the seat belt cannot be pulled out of the retractor, firmly pull the belt and release it. You will then be able to smoothly pull the belt out of the retractor.

When a passenger's shoulder belt is completely extended and is then retracted even slightly, the belt is locked in that position and cannot be extended. This feature is used to hold the child restraint system securely. (For details, see "Child restraint" in this chapter.) To free the belt again, fully retract the belt and then pull the belt out once more.

CAUTION

- **After inserting the tab, make sure the tab and buckle are locked and that the belt is not twisted.**
- **Do not insert coins, clips, etc. in the buckle as this may prevent you from properly latching the tab and buckle.**
- **If the seat belt does not function normally, immediately contact your Toyota dealer.**

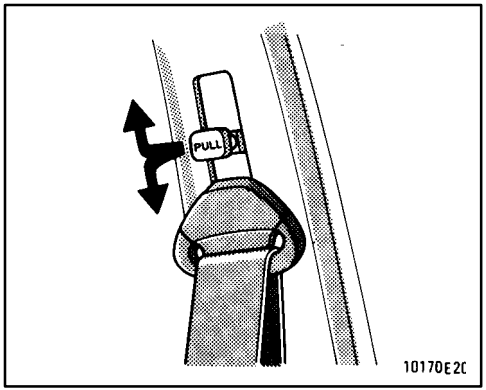

Seat belts with an adjustable shoulder anchor—

Adjust the shoulder anchor position to your size.

To adjust the anchor position, pull the knob out and slide it up or down. Release the knob and make sure the anchor is locked in position.

CAUTION

Always make sure the shoulder belt is positioned across the center of your shoulder. The belt should be kept away from the neck, but not falling off your shoulder. Failure to do so could reduce the amount of protection in an accident and increase the chance of injury.

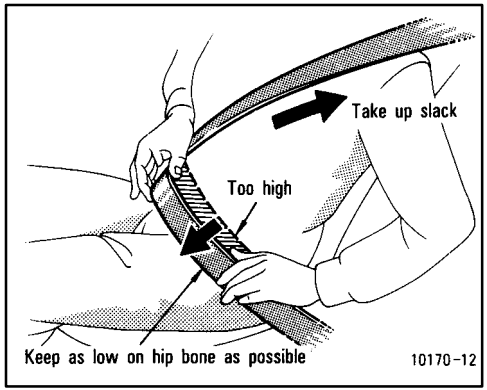

Adjust the position of the lap and shoulder belts.

Position the lap belt as low as possible on your hips—not on your waist, then adjust it to a snug fit by pulling the shoulder portion upward through the latch plate.

CAUTION

- **High-positioned lap belts and loose-fitting belts both could increase the chance of injury due to sliding under the lap belt during an accident. Keep the lap belt as low on your hip bone as possible.**
- **For your safety, do not place the shoulder belt under your arm.**

—Rear center seat belt

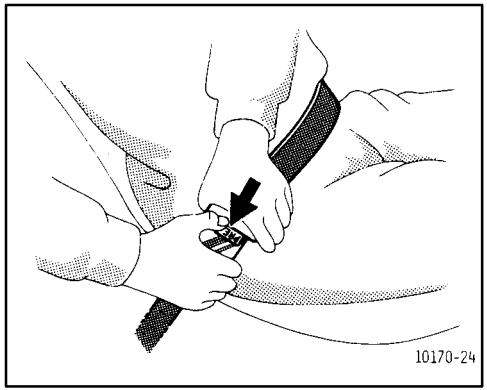

To release the belt, press the buckle-release button and allow the belt to retract.

If the belt does not retract smoothly, pull it out and check for kinks or twists. Then make sure it remains untwisted as it retracts.

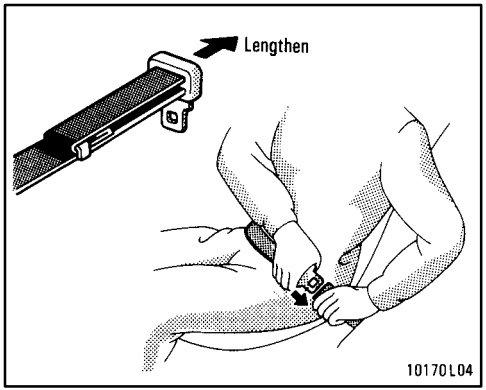

Sit up straight and well back in the seat. To fasten your belt, insert the tab into the buckle.

You will hear a click when the tab locks into the buckle.

If the belt is not long enough for you, hold the tab at a right angle to the belt and pull on the tab.

CAUTION

- **After inserting the tab, make sure the tab and buckle are locked and that the belt is not twisted.**

- **Do not insert coins, clips, etc. in the buckle as this may prevent you from properly latching the tab and buckle.**
- **If the seat belt does not function normally, immediately contact your Toyota dealer.**

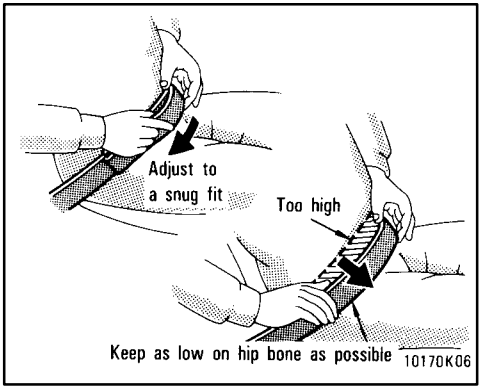

Remove excess length of the belt and adjust the belt position.

To shorten the belt, pull the free end of the belt.

Position the lap belt as low as possible on your hips—not on your waist, then adjust it to a snug fit.

CAUTION

High-positioned and loose-fitting lap belts could increase the chance of injury due to sliding under the lap belt during an accident. Keep the lap belt as low on your hip bone as possible.

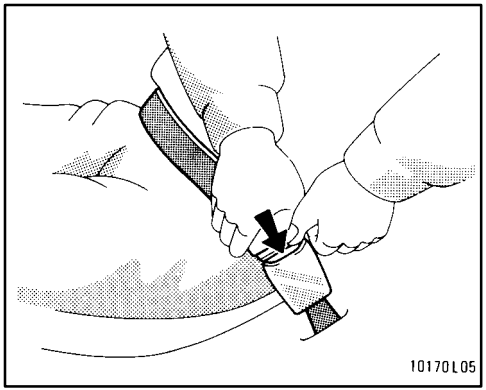

To release the belt, press the buckle-release button.

—Stowing the rear center seat belts (wagon)

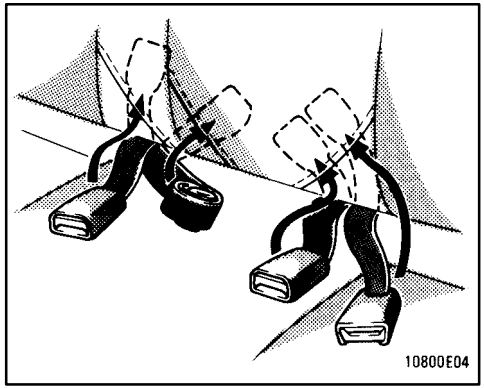

The rear seat belts can be stowed when not in use.

Seat belts must be stowed before you fold the seatback. (See “Fold-down rear seat” in this chapter.)

—Seat belt extender

If your seat belt cannot be fastened securely because it is not long enough, a personalized seat belt extender is available from your Toyota dealer free of charge.

Please contact your local Toyota dealer so that the dealer can order the proper required length for the extender. Bring the heaviest coat you expect to wear for proper measurement and selection of length. Additional ordering information is available at your Toyota dealer.

CAUTION

When using the seat belt extender, observe the following. Failure to follow these instructions could result in less effectiveness of the seat belt restraint system in case of vehicle accident, increasing the chance of personal injury.

- **Never use the seat belt extender if you can fasten the seat belt without it.**
- **Remember that the extender provided for you may not be safe when used on a different vehicle, or for another person or at a different seating position than the one originally intended for.**

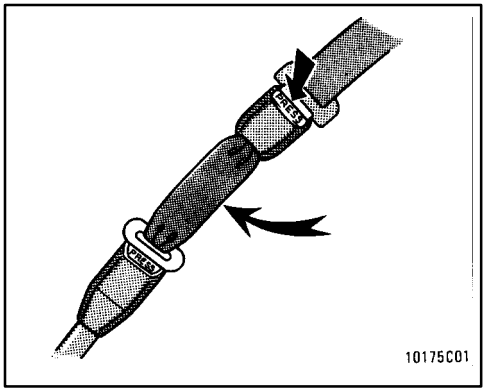

To connect the extender to the seat belt, insert the tab into the seat belt buckle so that the "PRESS" signs on the buckle-release buttons of the extender and the seat belt are both facing outward as shown.

You will hear a click when the tab locks into the buckle.

When releasing the seat belt, press on the buckle-release button on the extender, not on the seat belt. This helps prevent damage to the vehicle interior and extender itself.

When not in use, remove the extender and store in the vehicle for future use.

CAUTION

- **After inserting the tab, make sure the tabs and buckle are locked and that the belt is not twisted.**
- **Do not insert coins, clips, etc. in the buckle as this may prevent you from properly latching the tab and buckle.**
- **If the seat belt does not function normally, immediately contact your Toyota dealer.**

SRS airbags
(for driver and front passenger)

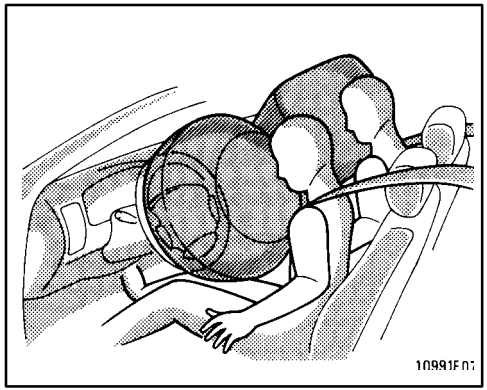

The SRS (Supplemental Restraint System) airbags are designed to provide further protection to the driver and front passenger when added to the primary protection provided by the seat belts.

In response to a severe frontal impact, the SRS airbags work together with the seat belts to prevent or reduce injury by inflating, in order to decrease the likelihood of the driver's or front passenger's head or chest directly hitting the steering wheel or dashboard. The passenger airbag is activated even with no passenger in the front seat.

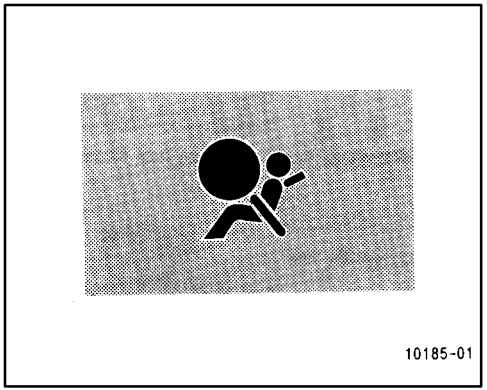

This indicator comes on when the ignition key is turned to the "ACC" or "ON" position. It goes off after about 6 seconds. This means the SRS airbags are operating properly.

The SRS airbag warning light system monitors the airbag sensor assembly, inflators, warning light, interconnecting wiring and power sources.

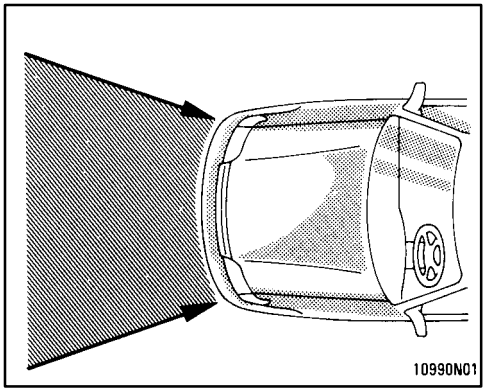

The SRS airbag system is designed to activate in response to a severe frontal impact within the shaded area between the arrows in the illustration.

The SRS airbags will deploy if the severity of the impact is above the designed threshold level, comparable to an approximate 20 km/h (14 mph) collision when impacting straight into a fixed barrier that does not move or deform.

If the severity of the impact is below the above threshold level, the SRS airbags may not deploy.

However, this threshold velocity will be considerably higher if the vehicle strikes an object, such as a parked vehicle or sign pole, which can move or deform on impact, or if it is involved in an underride collision (a collision in which the nose of the vehicle “underrides”, or goes under, the bed of a truck).

It is possible with collision severity at the marginal level of airbag sensor detection and activation that only one of your vehicle’s two airbags will deploy.

For your safety, be sure to always wear your seat belts.

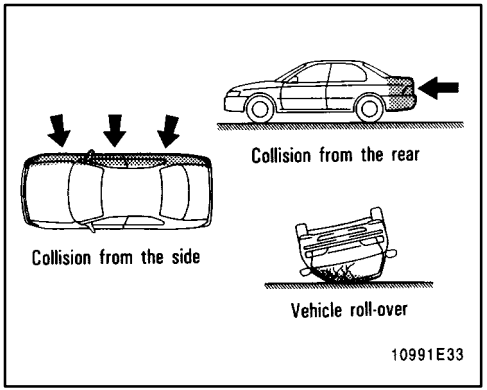

The SRS airbags are not designed to inflate if the vehicle is subjected to a side or rear impact, if it rolls over, or if it is involved in a low-speed frontal collision.

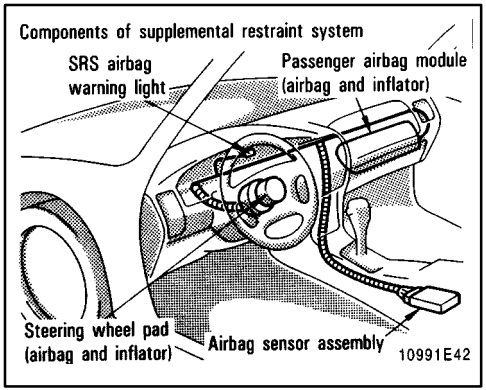

The airbag sensor assembly consists of a safing sensor and airbag sensor.

In a severe frontal impact, sensors detect deceleration and the system triggers the airbag inflators. Then a chemical reaction in the inflators momentarily fills the airbags with non-toxic nitrogen gas to help restrain the forward motion of the occupants.

When the airbags inflate, they produce a fairly loud noise and release some smoke along with the nitrogen gas. This is not harmful and does not indicate a fire. Be sure to wash off any residue as soon as possible to prevent minor skin irritation.

Deployment of the airbags happen in a fraction of a second, so the airbags must inflate with considerable force. While the system is designed to reduce serious injuries, it may also cause minor burns or abrasions and swellings.

Parts of the airbag module (steering wheel hub, dashboard) may be hot for several minutes, but the airbags themselves will not be hot. The airbags are designed to inflate only once.

A crash severe enough to inflate the airbags may break the windshield as the vehicle buckles. In vehicles with a passenger airbag the windshield may also be damaged by absorbing some of the force of the inflating airbag.

CAUTION

- **The SRS airbag system is designed only as a supplement to the primary protection of the seat belt systems of the driver and front passenger. The front seat occupants are particularly susceptible to injury if they do not wear their seat belts; when sudden braking or a collision occurs, they may be thrown forward. To obtain further protection in an accident, the driver and all passengers in the vehicle should always wear their seat belts when driving. For instructions and precautions concerning the seat belt system, see "Seat belts" in this chapter.**
- **A baby or small child who is too small to use a seat belt should be properly secured in a rear seat using a child restraint system.**

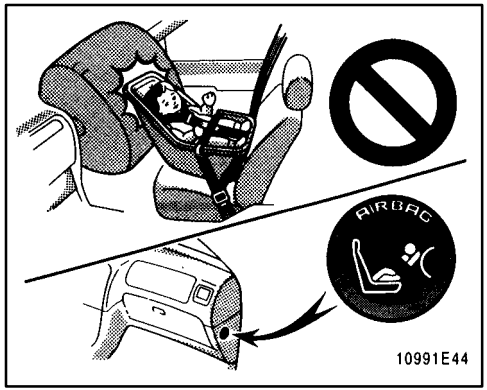

- **Do not use a rear-facing child restraint system in the front seat because the force of the rapid inflation of the passenger airbag may cause severe injury to the child. Vehicles with a passenger airbag display a caution label on the passenger side instrument panel as shown above to remind you not to install a rear-facing child restraint system on the front seat.**

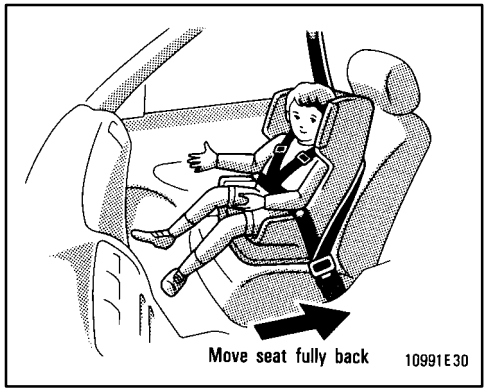

- **When using a forward-facing child restraint system in the front seat, the seat must be moved as far back as possible. For instructions concerning the installation of a child restraint system, see "Child restraint" in this chapter.**

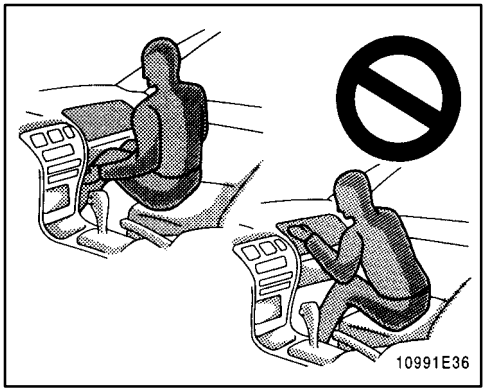

- **Do not sit on the edge of the seat or lean over the dashboard when the vehicle is in use. The airbags inflate with considerable speed and force; you may be severely injured. Sit up straight and well back in the seat, and always use your seat belt.**

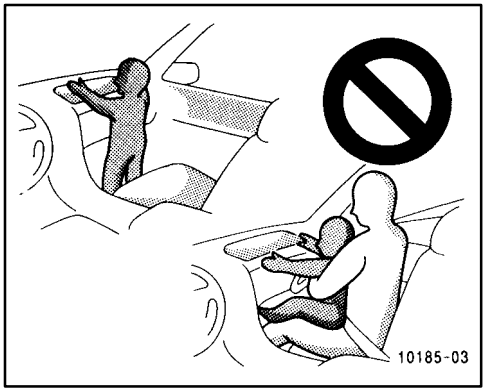

- **Do not allow a child to stand up, or to kneel on the front passenger seat. The airbag inflates with considerable speed and force; the child may be severely injured.**
- **Do not hold a child on your lap or in your arms. Use a child restraint system in the rear seat. For instructions concerning the installation of a child restraint system, see "Child restraint" in this chapter.**

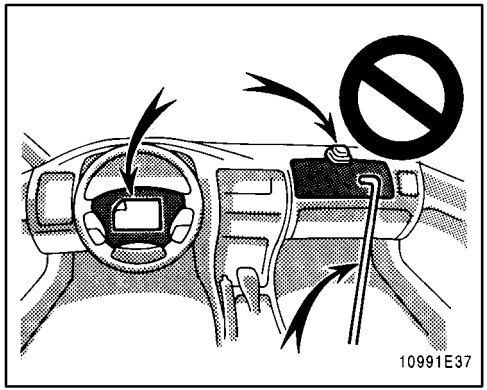

- **Do not put objects on or in front of the dashboard or steering wheel pad that houses the airbag system. They might restrict inflation or cause personal injury as they are projected rearward.**
- **Do not modify, remove or open any component or wiring, such as the steering wheel, column cover, front passenger airbag cover, front passenger airbag or airbag sensor assembly. Doing any of these may cause sudden SRS airbag inflation or disable the system, which could result in personal injury.**

Failure to follow these instructions can result in severe injuries.

NOTICE

Do not perform any of the following changes without consulting your Toyota dealer. Such changes can interfere with proper operation of the SRS airbag system in some cases.

- ***Installation of electronic items such as a mobile two-way radio, cassette tape player or compact disc player***
- ***Modification of the suspension system***
- ***Modification of the front end structure***
- ***Attachment of a grille guard (bull bar, kangaroo bar, etc.), snowplow, winches or any other equipment to the front end***
- ***Repairs made on or near the console, steering column, steering wheel or dashboard near the front passenger airbag***

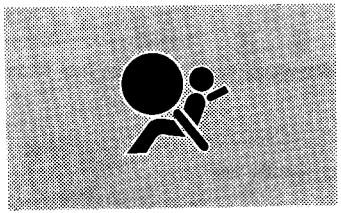

This SRS airbag system has a service reminder indicator to inform the driver of operating problems. If either of the following conditions occurs, this indicates a malfunction of the airbags. Contact your Toyota dealer as soon as possible to service the vehicle.

- The light does not come on when the ignition key is turned to the “ACC” or “ON” position, or remains on.
- The light comes on while driving.

SRS airbag (for driver)

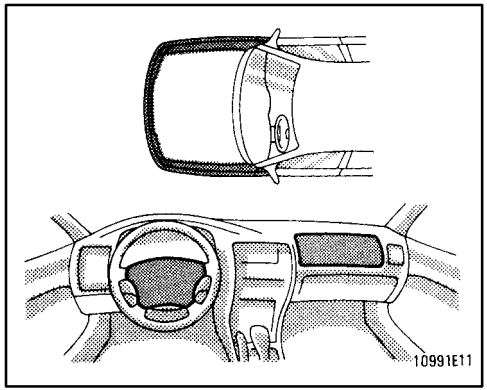

In the following cases, contact your Toyota dealer as soon as possible:

- The SRS airbags have been inflated.
- The front part of the vehicle (shaded in the illustration) was involved in an accident not of the extent to cause the SRS airbags to inflate
- The pad section of the steering wheel or front passenger airbag cover (shaded in the illustration) is scratched, cracked, or otherwise damaged.

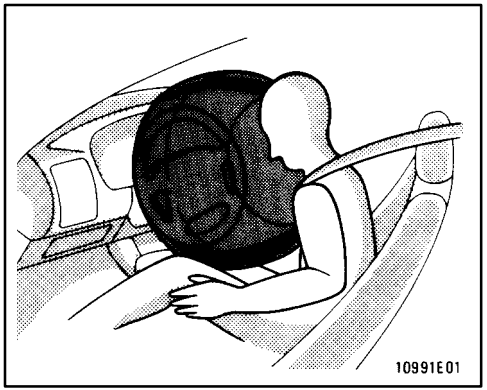

The SRS (Supplemental Restraint System) airbag is designed to provide further protection to the driver when added to the primary protection provided by the seat belt.

In response to a severe frontal impact, the SRS airbag works together with the seat belt to prevent or reduce injury by inflating, in order to decrease the likelihood of the driver's head or chest directly hitting the steering wheel.

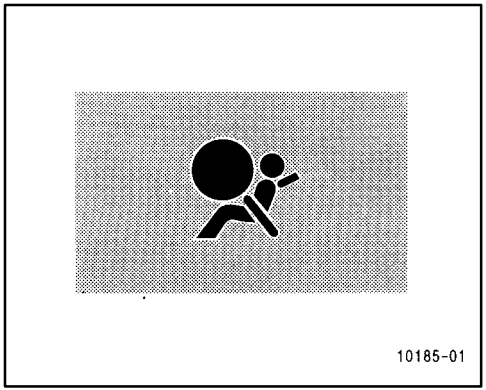

This indicator comes on when the ignition key is turned to the "ACC" or "ON" position. It goes off after about 6 seconds. This means the SRS airbag is operating properly.

The SRS airbag warning light system monitors the airbag sensor assembly, inflator, warning light, interconnecting wiring and power sources.

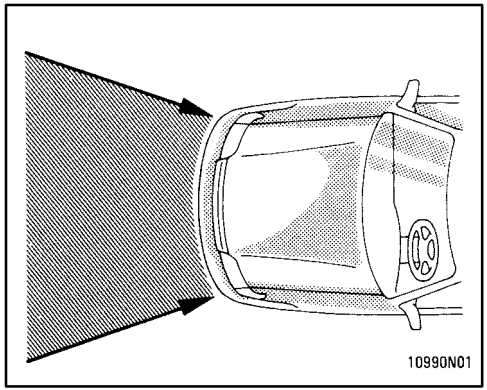

The SRS airbag system is designed to activate in response to a severe frontal impact within the shaded area between the arrows in the illustration.

The SRS airbag will deploy if the severity of the impact is above the designed threshold level, comparable to an approximate 20 km/h (14 mph) collision when impacting straight into a fixed barrier that does not move or deform.

If the severity of the impact is below the above threshold level, the SRS airbag may not deploy.

However, this threshold velocity will be considerably higher if the vehicle strikes an object, such as a parked vehicle or sign pole, which can move or deform on impact, or if it is involved in an underride collision (e.g. a collision in which the nose of the vehicle “underrides”, or goes under, the bed of a truck).

For the safety of all occupants, be sure to always wear seat belts.

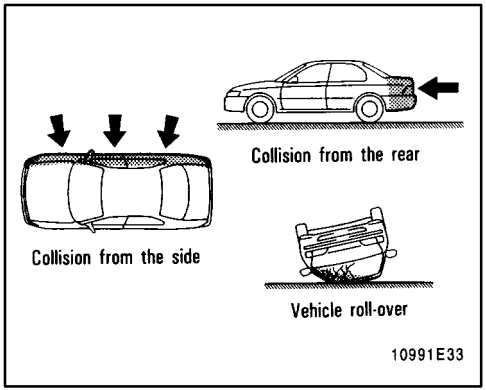

The SRS airbag is not designed to inflate if the vehicle is subjected to a side or rear impact, if it rolls over, or if it is involved in a low-speed frontal collision.

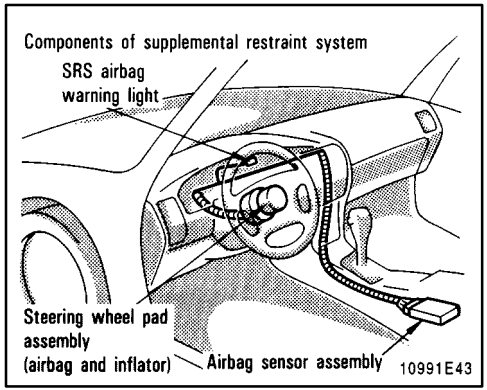

The airbag sensor assembly consists of a safing sensor and airbag sensor.

In a severe frontal impact, the sensor detects deceleration and the system triggers the airbag inflator. Then a chemical reaction in the inflator momentarily fills the airbag with non-toxic nitrogen gas to help restrain the forward motion of the driver.

When the airbag inflates, it produces a fairly loud noise and releases some smoke along with the nitrogen gas. This is not harmful and does not indicate a fire. Be sure to wash off any residue as soon as possible to prevent minor skin irritation.

Deployment of the airbag happens in a fraction of a second, so the airbag must inflate with considerable force. While the system is designed to reduce serious injuries, it may also cause minor burns or abrasions and swellings.

The steering wheel hub may be hot for several minutes, but the airbag itself will not be hot. The airbag is designed to inflate only once.

⚠ CAUTION

The SRS airbag system is designed only as a supplement to the primary protection of the seat belt system of the driver. The driver is particularly susceptible to injury if he/she does not wear his/her seat belt; when sudden braking or a collision occurs, he/she may be thrown forward. To obtain further protection in an accident, the driver and all passengers in the vehicle should always wear their seat belts when driving. For instructions and precautions concerning the seat belt system, see “Seat belts” in this chapter.

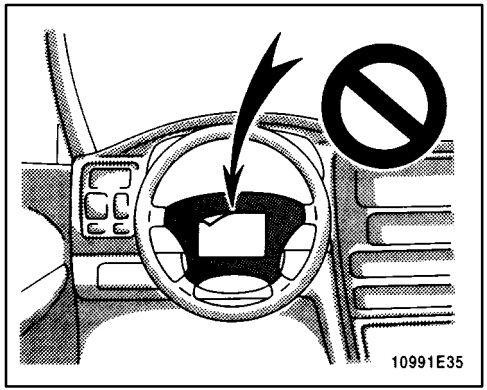

⚠ CAUTION

- **Do not put objects on the steering wheel pad. They might restrict inflation or cause serious injury as they are projected rearward.**
- **Do not modify, remove or open any component or wiring, such as the steering wheel, column cover or airbag sensor assembly. Doing any of these may cause sudden SRS airbag inflation or disable the system, which could result in personal injury.**

Failure to follow these instructions can result in severe injuries.

NOTICE

Do not perform any of the following changes without consulting your Toyota dealer. Such changes can interfere with proper operation of the SRS airbag system in some cases.

- ◆***Installation of electronic items such as a mobile two-way radio, cassette tape player or compact disc player***
- ◆***Modification of the suspension system***
- ◆***Modification of the front end structure***
- ◆***Attachment of a grille guard (bull bar, kangaroo bar, etc.), snowplow, winches or any other equipment to the front end***
- ◆***Repairs made on or near the console, steering column or steering wheel***

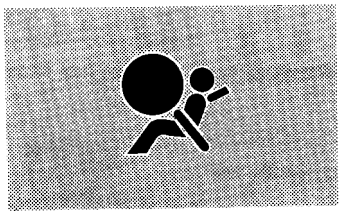

This SRS airbag system has a service reminder indicator to inform the driver of operating problems. If either of the following conditions occurs, this indicates a malfunction of the airbag. Contact your Toyota dealer as soon as possible to service the vehicle.

- The light does not come on when the ignition key is turned to the “ACC” or “ON” position, or remains on.
- The light comes on while driving.

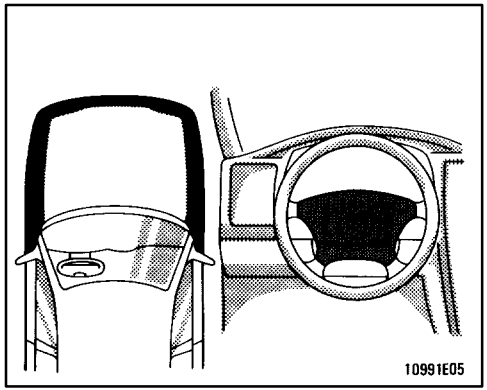

In the following cases, contact your Toyota dealer as soon as possible:

- The SRS airbag has been inflated.
- The front part of the vehicle (shaded in the illustration) was involved in an accident not of the extent to cause the SRS airbag to inflate
- The pad section of the steering wheel (shaded in the illustration) is scratched, cracked, or otherwise damaged.

Child restraint—
—Child restraint precautions

Toyota strongly urges the use of child restraint systems for children small enough to use them.

The laws of all fifty states in the U.S.A. and Canada now require the use of a child restraint system.

CAUTION

For effective protection in automobile accidents and sudden stops, children must be properly restrained. Holding a child in your arms is not a substitute for a child restraint system. In an accident, the child can be crushed against the windshield, or between you and the vehicle's interior if you are unrestrained.

—Built-in child restraint

This child restraint is designed for use only by children who weigh between 9 kg (20 lb.) and 30 kg (66 lb.), whose height is 127 cm (50 in.) or less, who are capable of sitting upright alone, and whose shoulder height is less than the shoulder belt slots in use.

The child should be one year old or more and at least 71 cm (28 in.) in height. It is important to use a rear-facing child restraint until the child is about a year old. A rear-facing restraint gives the child's head, neck and body the support they would need in a crash. See "—Child restraint system" in this chapter for more information.

If your child's shoulders are above the upper shoulder belt position, do not use the built-in child restraint. Your child should use the vehicle's seat belts.

This child restraint system conforms to U.S. Motor Vehicle Safety Standard No. 213 and Canada Motor Vehicle Safety Standard No. 213.4.

According to accident statistics, children are safer when properly restrained in the rear seat than in the front seat.

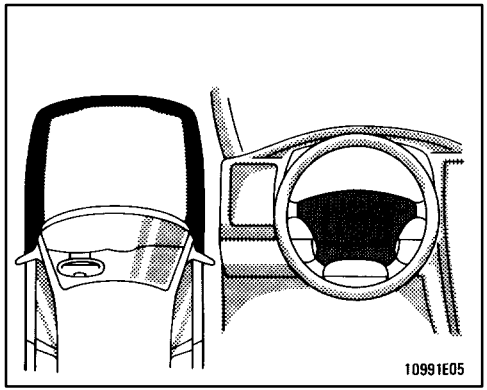

In the following cases, contact your Toyota dealer as soon as possible:

- The SRS airbag has been inflated.
- The front part of the vehicle (shaded in the illustration) was involved in an accident not of the extent to cause the SRS airbag to inflate
- The pad section of the steering wheel (shaded in the illustration) is scratched, cracked, or otherwise damaged.

Child restraint—
—Child restraint precautions

Toyota strongly urges the use of child restraint systems for children small enough to use them.

The laws of all fifty states in the U.S.A. and Canada now require the use of a child restraint system.

CAUTION

For effective protection in automobile accidents and sudden stops, children must be properly restrained. Holding a child in your arms is not a substitute for a child restraint system. In an accident, the child can be crushed against the windshield, or between you and the vehicle's interior if you are unrestrained.

—Built-in child restraint

This child restraint is designed for use only by children who weigh between 9 kg (20 lb.) and 30 kg (66 lb.), whose height is 127 cm (50 in.) or less, who are capable of sitting upright alone, and whose shoulder height is less than the shoulder belt slots in use.

The child should be one year old or more and at least 71 cm (28 in.) in height. It is important to use a rear-facing child restraint until the child is about a year old. A rear-facing restraint gives the child's head, neck and body the support they would need in a crash. See "—Child restraint system" in this chapter for more information.

If your child's shoulders are above the upper shoulder belt position, do not use the built-in child restraint. Your child should use the vehicle's seat belts.

This child restraint system conforms to U.S. Motor Vehicle Safety Standard No. 213 and Canada Motor Vehicle Safety Standard No. 213.4.

According to accident statistics, children are safer when properly restrained in the rear seat than in the front seat.

CAUTION

Make sure the child is securely restrained with the built-in child restraint. Failure to follow the manufacturer's instructions on the use of this child restraint system can result in your child striking the vehicle's interior during a sudden stop or crash. Snugly adjust the belts provided with the child restraint around your child.

When using the built-in child restraint, observe the following:

- **Use the belts for only one child at a time. Do not use the belts for two or more children.**
- **Be careful not to damage the belt webbing or hardware. Take care that they do not get caught or pinched in the seatback.**
- **Inspect the belt system periodically. Check for cuts, fraying, and loose parts. Damaged parts should be replaced. Do not disassemble or modify the child restraint belt system.**
- **Keep the belts clean and dry. If they need cleaning, use a mild soap solution or lukewarm water. Never use bleach, dye, or abrasive cleaners—they may severely weaken the belts.**
- **Replace the built-in child restraint assembly if it has been used in a severe impact. The entire assembly should be replaced even if damage is not obvious.**
- **Do not use another child restraint system over the opened built-in child restraint.**
- **Do not use the adult lap and shoulder belt with the built-in child restraint.**

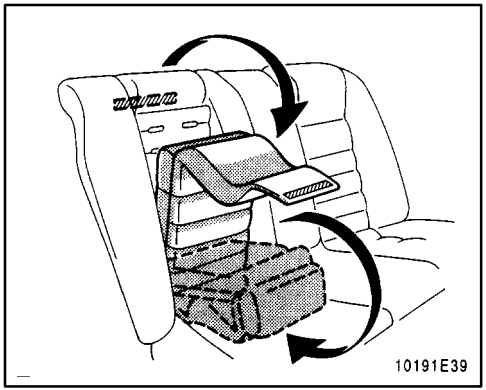

1. Separate the fastener tapes behind the head restraint to separate the head pad from the seatback. Lower the child restraint cushion and fold back the head pad under the child restraint cushion.

CAUTION

Do not use the built-in child restraint with the head pad unfolded.

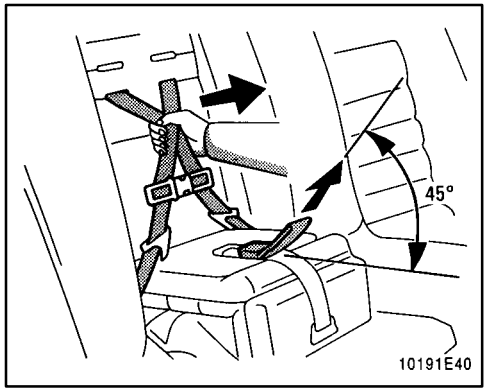

2. While pulling the seat belt release strap in the child seat cushion, pull both shoulder belts together.

Pull the seat belt release strap from above at about 45° angle to the child seat cushion.

If the shoulder belts cannot be pulled out, return the child seat cushion to an almost closed position, firmly pull the seat belt release strap and at the same time pull both shoulder belts, then lower the child seat cushion again.

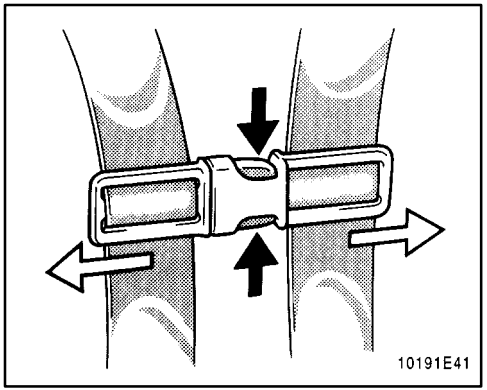

3. Compress the shoulder belt clip to separate the right and left shoulder belts.

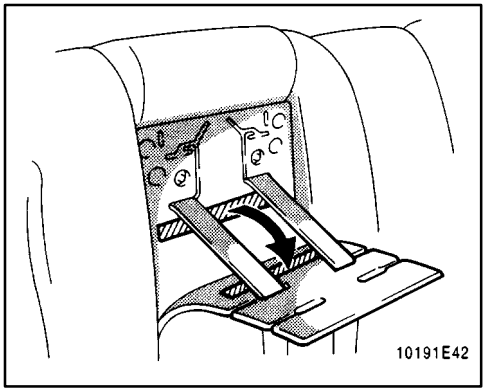

4. Add slack to the shoulder belts by pulling both of them together while pulling the black seat belt release strap (see step 4 for illustrated instruction). Then pull down the seatback part of the removable pad. Determine the proper shoulder belt slot height for your child. Select the slots at or just above the top of the child's shoulders.

The child seat pad is attached by fastener tapes.

CAUTION

If you remove the child seat pad for cleaning etc., do not use the built-in child restraint without the pad.

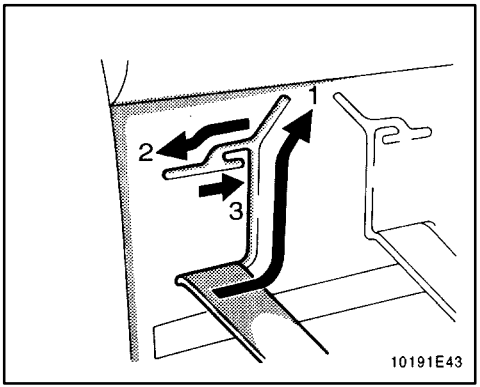

To move the shoulder belts from the lower slot to the upper slot:

1. Slide the belt up to the top of the seatback.

2. Slide the belt down to the outer side of the upper slot.

3. Squeeze the remaining edge of the seat belt down into the inner side of the upper slot.

You may have to push some belt material through the slot in order to move the belt. To move the belt to the lower position, reverse this procedure.

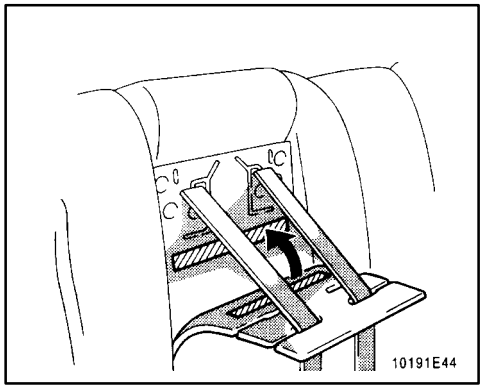

Make sure both belts are adjusted to the same height.

After moving the shoulder belts, press the removable pad against the fastener tape and install the pad to the seatback. Make sure the belts go through the slots in the pad that match the shoulder belt slots being used.

CAUTION

- **If your child's shoulders are above the upper shoulder belt position, do not use the built-in child restraint. Your child should use the vehicle's seat belts.**

- **Using the vehicle's safety belts on a child seated on the child restraint cushion can cause serious injury to the child in a sudden stop or crash.**
- **After moving the shoulder belts, make sure the belts are properly routed and that they are not twisted or flipped over.**

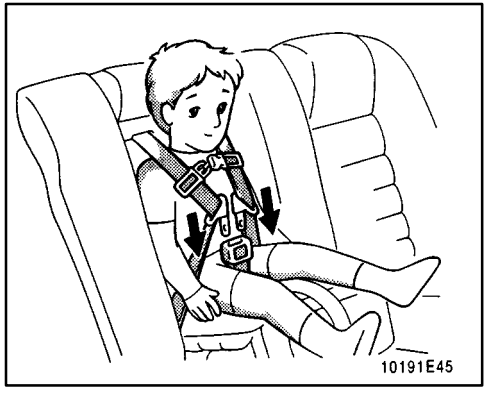

5. Sit the child on the child seat. Place a shoulder belt over each shoulder. Insert the tabs into the buckle.

CAUTION

- **After inserting the tabs, make sure the tabs and buckle are locked and that the shoulder belts and buckle strap are not twisted.**
- **Do not insert coins, clips, etc. in the buckle as this may prevent you from properly latching the tabs and buckle.**
- **If the seat belt does not function normally, immediately contact your Toyota dealer.**

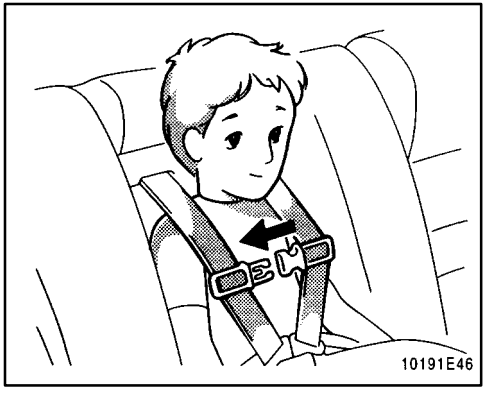

6. Fasten the shoulder belt clip.
The purpose of the clip is to keep the shoulder belts positioned correctly on the shoulders.

CAUTION

An unfastened shoulder belt clip will not keep the belts on the child's shoulders. In a sudden stop or crash, the child may go too far forward and be seriously injured. Make sure the belt clip is fastened at all times.

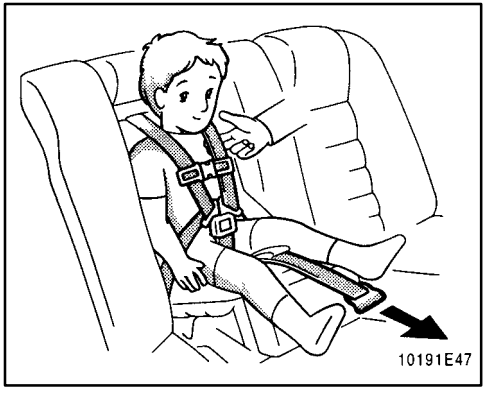

7. Pull the seat belt adjustment strap firmly until the shoulder belts are snugly adjusted around the child's shoulders.
You should not be able to put more than two fingers between the shoulder belts and the child's chest.

After adjusting the shoulder belt tightness, move the shoulder belt clip 5 to 8 cm (2 to 3 in.) below the child's chin. On each belt, the shoulder part should be centered on the child's shoulder. The belts should be away from the child's face and neck, but not falling off the child's shoulders.

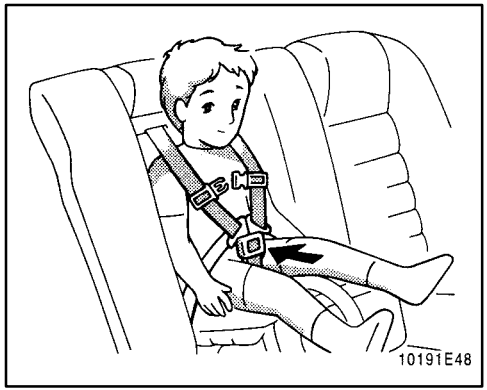

8. To release the child from the seat belts, compress the shoulder belt clip, then press the buckle release button.
Move both belts off the child's shoulders.

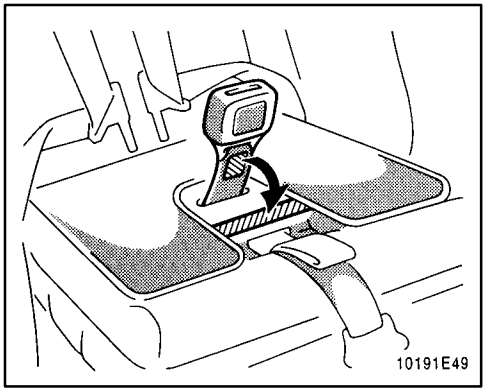

9. To store the built-in child restraint, fasten the shoulder belt clip and return the seat belt buckle using the fastener tapes. Fold up the seat belt adjustment strap in the seat. Then raise the seat cushion and return the head pad by engaging the fastener tapes while pressing the child restraint cushion and head pad firmly.

-Child restraint system

A child restraint system for a small child or baby must itself be restrained on the seat with either the lap belt or the lap portion of the lap/shoulder belt.

The child restraint system should conform to the size of the child and properly fit the vehicle seat. For greater safety, the child restraint system should be installed in the rear seat. According to accident statistics, children are safer when properly restrained in the rear seat than in the front seat.

When installing a child restraint system, follow the instructions provided by the manufacturer of the system. General directions are also provided under the following illustrations.

CAUTION

After installing the child restraint system, make sure it is secured in place. If it is not restrained securely, it may cause injury to the child in the event of a sudden stop or accident.

When not using the child restraint system, keep it secured with the seat belt or place it somewhere other than in passenger compartment. This will prevent it injuring passengers in the event of a sudden stop or accident.

Your vehicle has anchors for securing the top strap of a child restraint system. The anchor nuts are welded beneath the sheet metal to permit installation of an anchor bracket for a child restraint system.

To install an anchor bracket, use an 8 mm x 30 mm x 1.25 mm coarse thread metric bolt and 10 mm (0.4 in.) spacer. Note that the bolts accompanying many child restraint systems are not metric. You can damage the anchor nuts on your vehicle if you force bolts with different thread into the anchor nuts.

For instructions about how to install the anchor bracket, see “(C) TOP STRAP ANCHORS AND LOCATIONS”.

If your child restraint system does not provide any of the necessary parts, you can purchase the following items from your Toyota dealer.

* CRS installation kit
  (Part No. 04731-22012)
  —contains 1 bolt, 3 types of spacers and 1 locking clip.
* Bolt (Part No. 91511-60830)

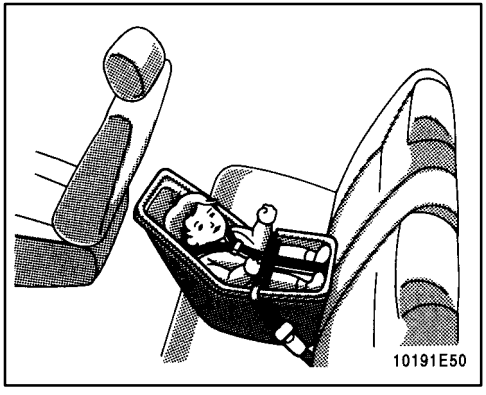

(A) INSTALLATION ON REAR SEAT CENTER

When installing a rear-facing child restraint system, follow the same procedure as when installing a forward-facing child restraint system.

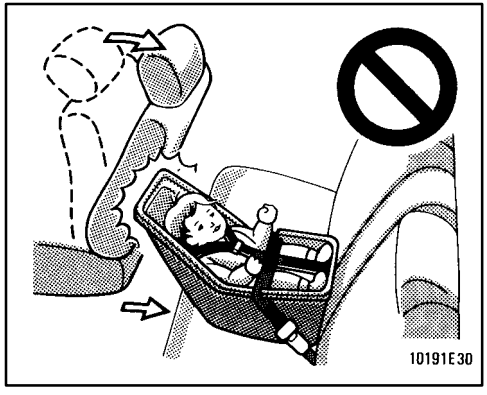

CAUTION

Do not use a rear-facing child restraint system in the rear seat if it interferes with the lock mechanism of the front seats. This may cause severe injury to the child and front passenger in case of sudden braking or a collision.

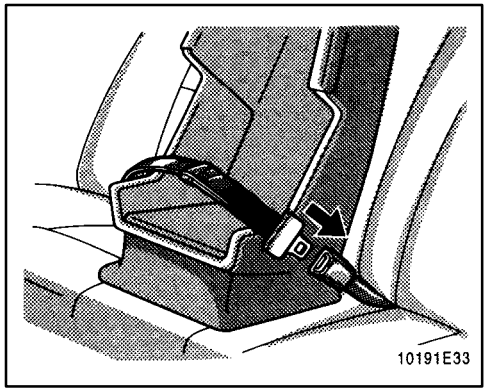

1. Fasten the center lap belt over the child restraint system following the instructions provided by its manufacturer.

CAUTION

- **After inserting the tab, make sure the tab and buckle are locked.**
- **Do not insert coins, clips, etc. in the buckle as this may prevent you from properly latching the tab and buckle.**
- **If the seat belt does not function normally, immediately contact your Toyota dealer.**

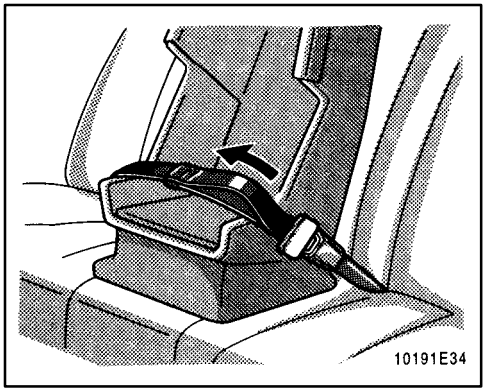

2. Make sure the belt is tight by pulling its free end while you firmly push down the child restraint system.

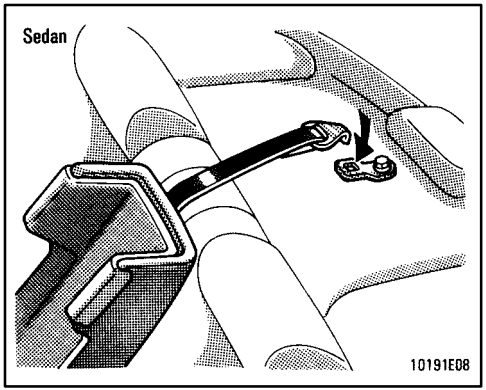

3. If your child restraint system requires the use of a top strap, latch the hook onto the anchor bracket and tighten the top strap.

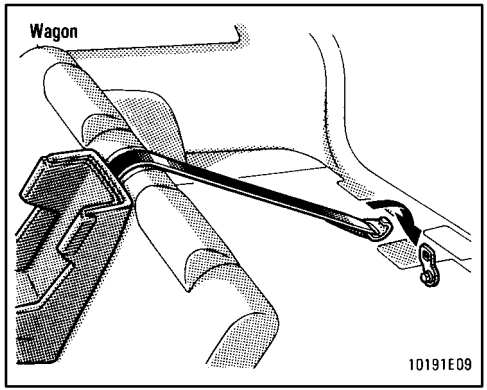

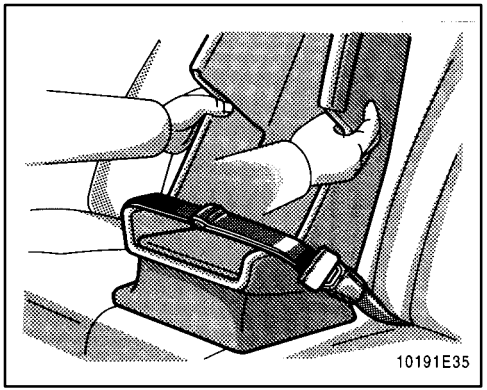

CAUTION

Push and pull the child restraint system in different directions to be sure it is secure.

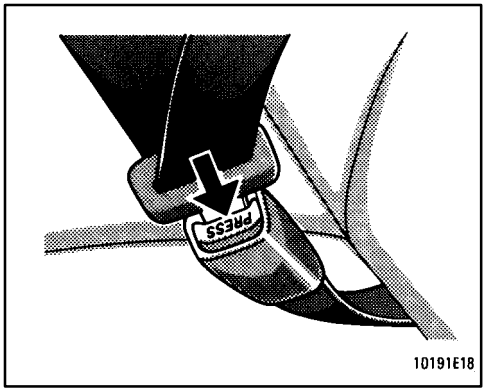

4. To remove the child restraint system, press the buckle-release button and unhook the top strap.

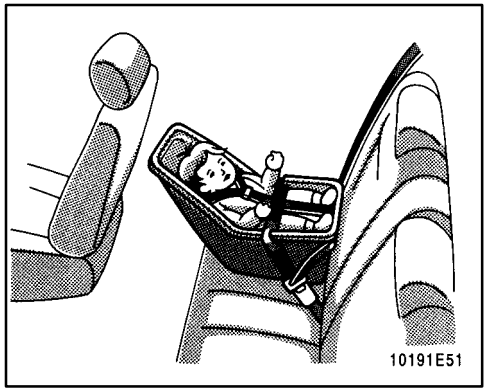

(B) INSTALLATION ON REAR SEAT OUTSIDE

When installing a rear-facing child restraint system, follow the same procedure as when installing a forward-facing child restraint system.

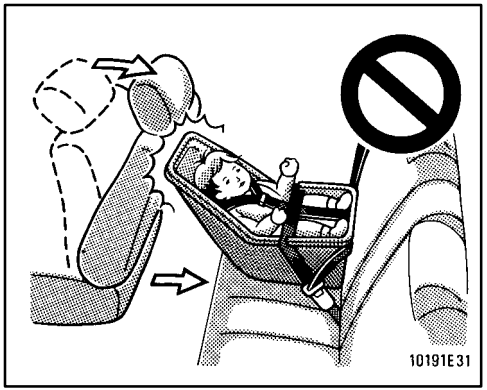

CAUTION

Do not use a rear-facing child restraint system in the rear seat if it interferes with the lock mechanism of the front seats. This can cause severe injury to the child and front passenger in case of sudden braking or a collision.

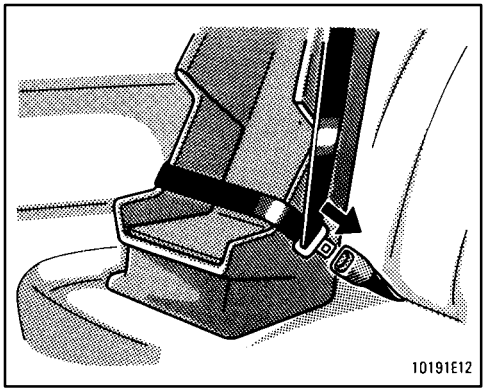

1. Fasten the lap and shoulder belt over the child restraint system following the instructions provided by its manufacturer. Keep the lap portion of the belt tight.

CAUTION

- **After inserting the tab, make sure the tab and buckle are locked.**
- **Do not insert coins, clips, etc. in the buckle as this may prevent you from properly latching the tab and buckle.**
- **If the seat belt does not function normally, immediately contact your Toyota dealer.**

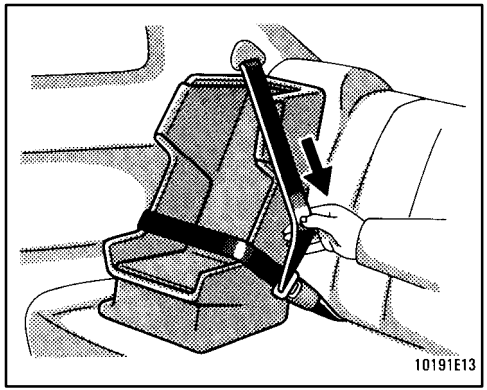

2. Fully extend the shoulder belt to put it in the lock mode.

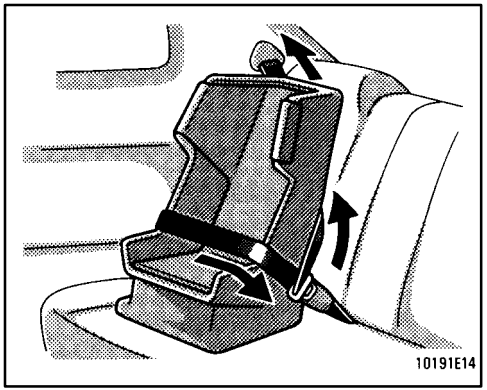

3. Place the shoulder belt between the vehicle seatback and the child restraint system and allow it to retract. To hold the child restraint system securely, let the shoulder belt retract as far as it will go while firmly pushing down the child restraint system.

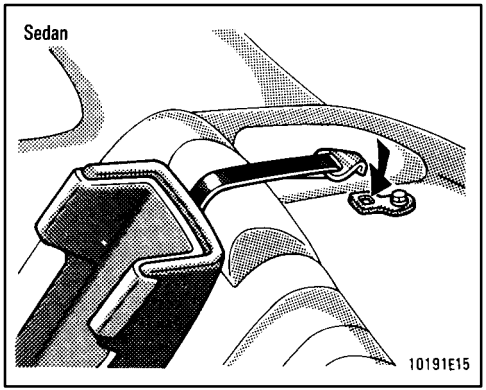

4. If your child restraint system requires the use of a top strap, latch the hook onto the anchor bracket and tighten the top strap.

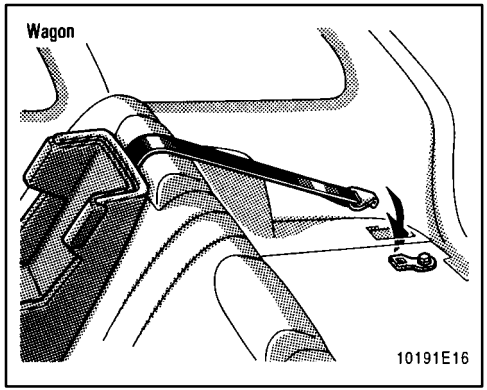

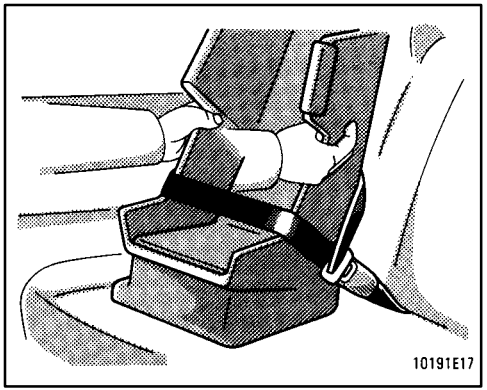

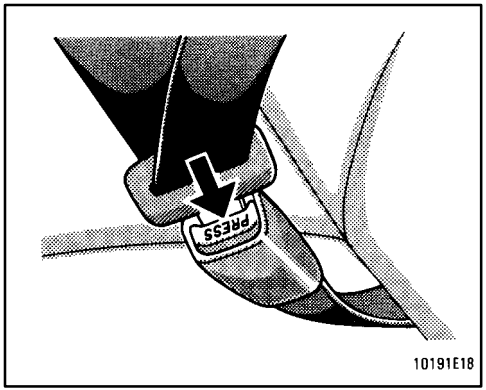

⚠ CAUTION

Make sure the seat belt is securely locked. Also make sure the child restraint system is secure by pushing and pulling it in different directions.

5. To remove the child restraint system, press the buckle-release button and allow the belt to retract. Unhook the top strap.

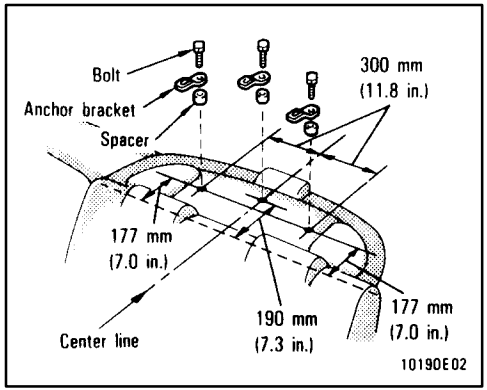

(C) TOP STRAP ANCHORS AND LOCATIONS

Sedan—On the filler panel behind the rear seat

With filler panel trim—

a. Using the illustration as a guide, run your fingers across the trim of the filler panel itself to locate the position of the holes underneath.

b. Make a hole in the covering directly above the hole in the filler panel.

c. Insert a 10 mm (0.4 in.) spacer and tighten down the anchor bracket for your child restraint system with a bolt. Torque the bolt to 16.5—24.7 N·m (1.68—2.52 kgf·m, 12.2—18.2 ft·lbf).

Without filler panel trim—

a. Remove the cap on the filler panel you wish to use.

b. Insert a 10 mm (0.4 in.) spacer and tighten down the anchor bracket for your child restraint system with a bolt. Torque the bolt to 16.5—24.7 N·m (1.68—2.52 kgf·m, 12.2—18.2 ft·lbf).

To comply with Canada Motor Vehicle Safety Standards, vehicles sold in Canada are provided with a bracket set in the glovebox, designed for use with any of the 3 anchor locations shown in the illustration.

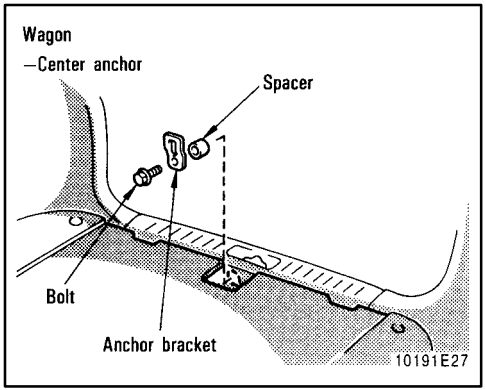

Wagon—On the rear cargo floor

Center anchor—

a. Roll up the covering on the rear cargo floor. The center anchor hole is plugged. Cut out the rear deck trim along the dotted line.

b. Insert a 10 mm (0.4 in.) spacer and tighten down the anchor bracket for your child restraint system with a bolt. Torque the bolt to 16.5—24.7 N·m (1.68—2.52 kgf·m, 12.2—18.2 ft·lbf).

c. Cut a small hole in the floor covering to allow the anchor bracket to come through and then reinstall the floor covering.

To comply with Canada Motor Vehicle Safety Standards, vehicles sold in Canada are provided with a bracket set in the glovebox, designed for use with the anchor locations shown in the illustration.

If you remove the anchor bracket when the child restraint system is necessary no longer, replace the bolt in the hole to prevent entry of exhaust emissions, water or dirt.

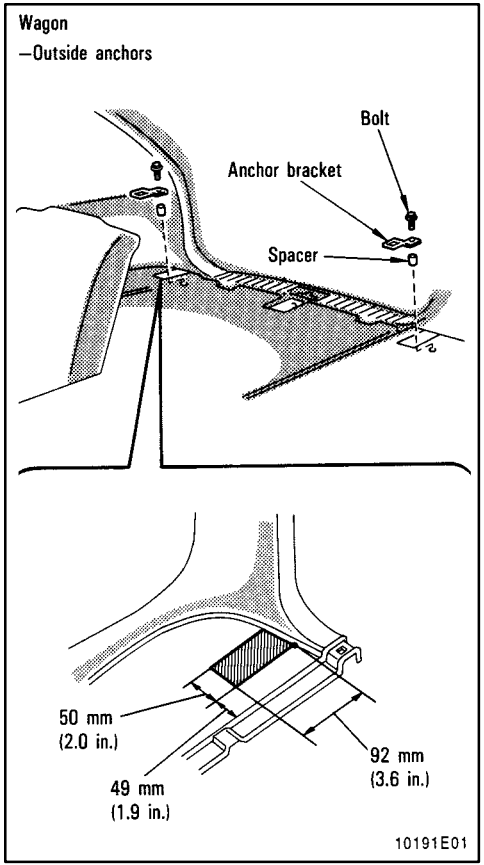

Outside anchors—

a. Roll up the covering on the rear cargo floor.

b. Cut a hole in the rear deck side trim at the locations shown in the illustration.

c. Remove the sealant from the anchor hole to install the anchor bracket.

d. Insert a 10 mm (0.4 in.) spacer and tighten down the anchor bracket for your child restraint system with a bolt. Torque the bolt to 16.5—24.7 N·m (1.68—2.52 kgf·m, 12.2—18.2 ft·lbf).

To comply with Canada Motor Vehicle Safety Standards, vehicles sold in Canada are provided with a bracket set in the glovebox, designed for use with either of the anchor locations shown in the illustration.

If you remove the anchor brackets when the child restraint system is necessary no longer, replace the bolts in the holes to prevent entry of exhaust emissions, water or dirt.

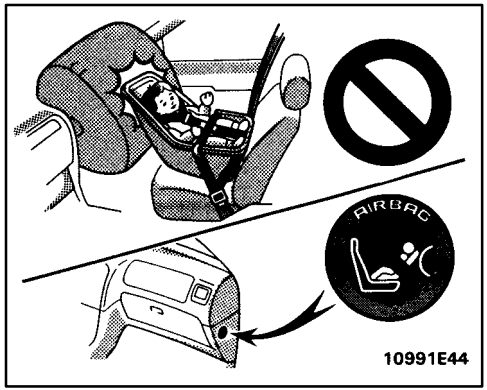

(D)INSTALLATION ON FRONT SEAT——Vehicles with front passenger airbag

CAUTION

- **Do not use a rear-facing child restraint system in the front seat because the force of the rapid inflation of the passenger airbag may cause severe injury to the child. Vehicles with a passenger airbag display a caution label on the passenger side instrument panel as shown above to remind you not to install a rear-facing child restraint system on the front seat.**

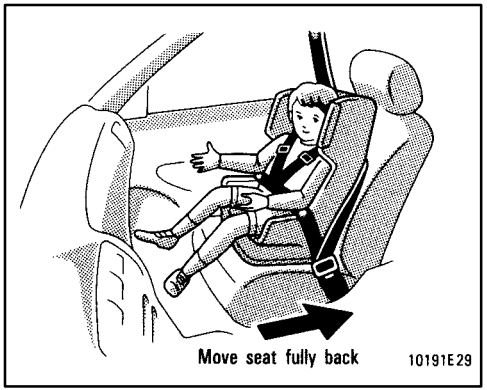

- **When using a forward-facing child restraint system, move the seat as far back as possible.**

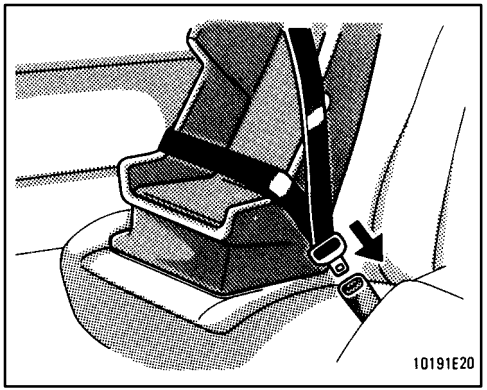

1. Fasten the lap and shoulder belt over the child restraint system following the instructions provided by its manufacturer. Keep the lap portion of the belt tight.

CAUTION

- **After inserting the tab, make sure the tab and buckle are locked.**
- **Do not insert coins, clips, etc. in the buckle as this may prevent you from properly latching the tab and buckle.**
- **If the seat belt does not function normally, immediately contact your Toyota dealer.**

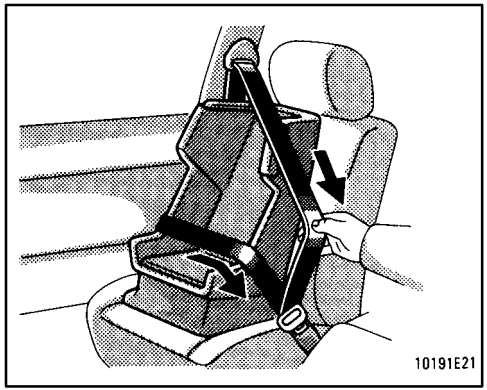

2. Fully extend the shoulder belt to put in the lock mode.

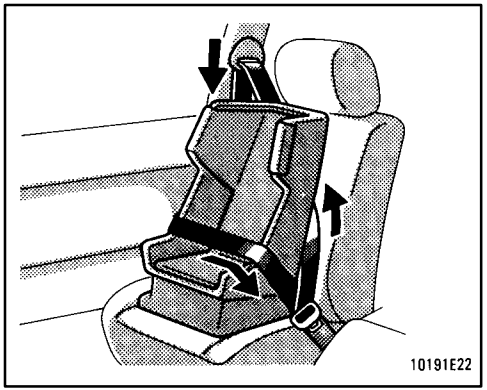

3. Place the shoulder belt between the vehicle seatback and the child restraint system and allow it to retract. To hold the child restraint system securely, let the shoulder belt retract as far as it will go while firmly pushing down the child restraint system.

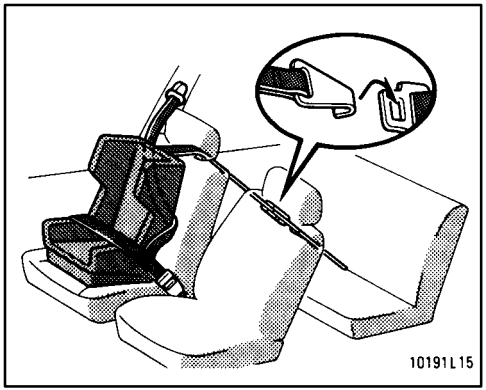

4. If your child restraint system requires the use of a top strap, latch the hook onto the tab of the rear center belt and tighten the top strap.

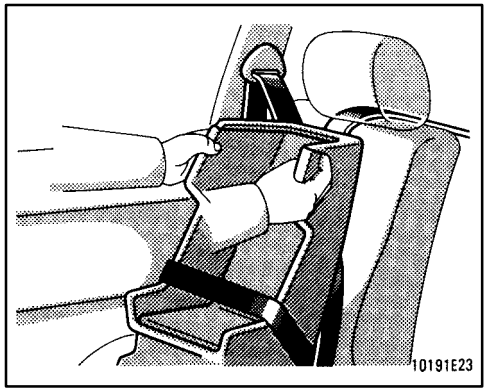

CAUTION

Make sure the seat belt is securely locked. Also make sure the child restraint system is secure by pushing and pulling it in different directions.

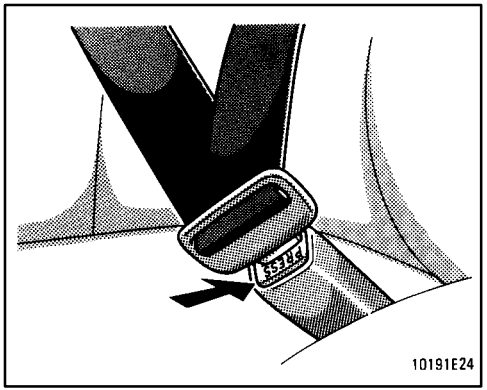

5. To remove the child restraint system, press the buckle-release button and allow the belt to retract. Unhook the top strap.

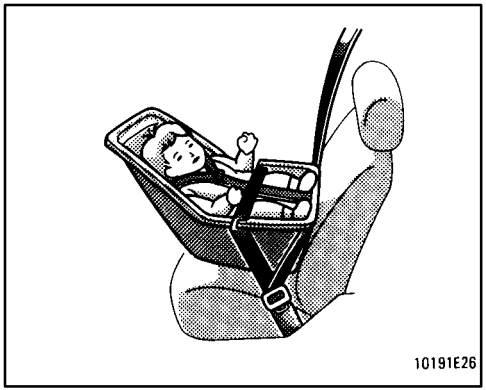

—Vehicles without front passenger airbag

When installing a rear-facing child restraint system, follow the same procedure as when installing a forward-facing child restraint system.

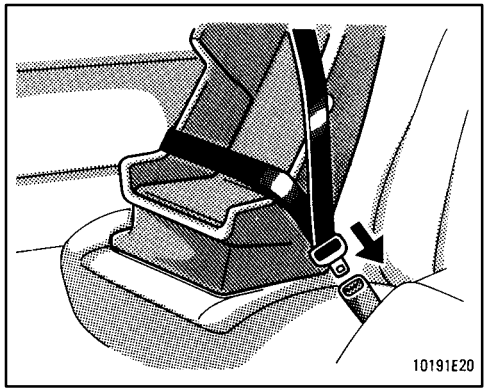

1. Fasten the lap and shoulder belt over the child restraint system following the instructions provided by its manufacturer. Keep the lap portion of the belt tight.

CAUTION

- **After inserting the tab, make sure the tab and buckle are locked.**
- **Do not insert coins, clips, etc. in the buckle as this may prevent you from properly latching the tab and buckle.**
- **If the seat belt does not function normally, immediately contact your Toyota dealer.**

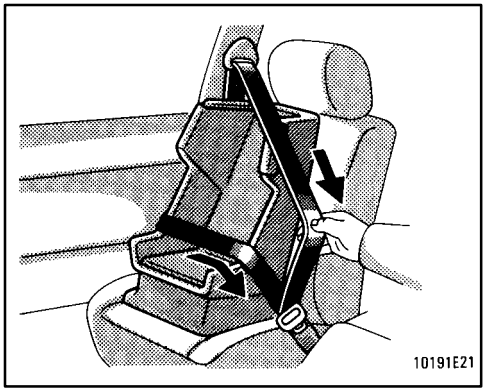

2. Fully extend the shoulder belt to put it in the lock mode.

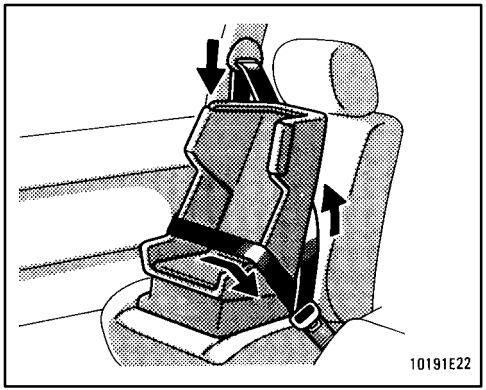

3. Place the shoulder belt between the vehicle seatback and the child restraint system and allow it to retract. To hold the child restraint system securely, let the shoulder belt retract as far as it will go while firmly pushing down the child restraint system.

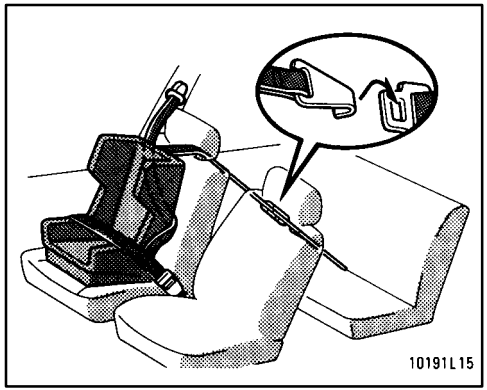

4. If your child restraint system requires the use of a top strap, latch the hook onto the tab of the rear center belt and tighten the top strap.

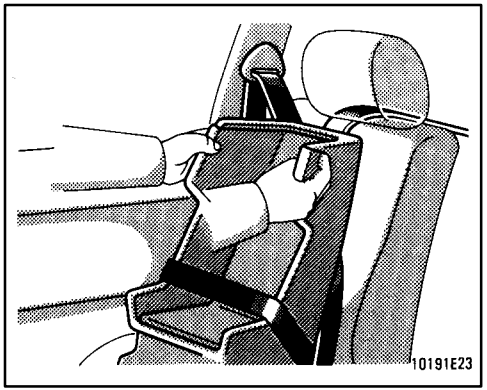

CAUTION

Make sure the seat belt is securely locked. Also make sure the child restraint system is secure by pushing and pulling it in different directions.

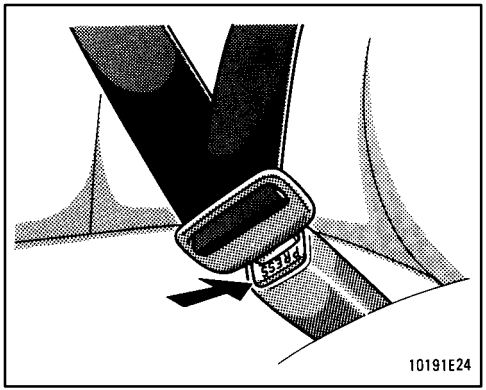

5. To remove the child restraint system, press the buckle-release button and allow the belt to retract. Unhook the top strap.

Tilt steering wheel

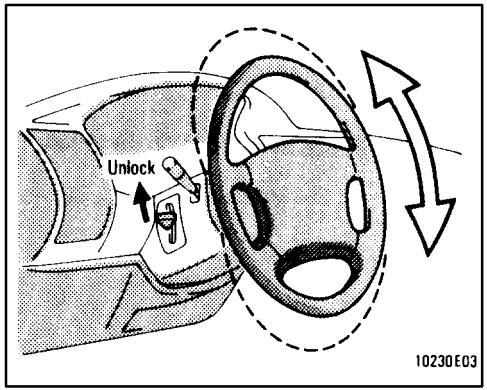

To change the steering wheel angle, pull up the lock release lever, tilt the steering wheel to the desired angle and release the lever.

⚠ CAUTION

- **Do not adjust the steering wheel while the vehicle is moving.**
- **After adjusting the steering wheel, try moving it up and down to make sure it is locked in position.**

Outside rear view mirrors—

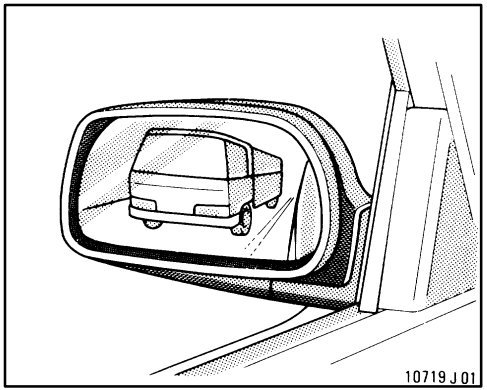

Adjust the mirror so you can see the side of your vehicle in the mirror.

Be careful when judging the size or distance of any object seen in the outside rear view mirror on the passenger's side. It is a convex mirror with a curved surface. Any object seen in a convex mirror will look smaller and farther away than when seen in a flat mirror.

—Rear view mirror remote control

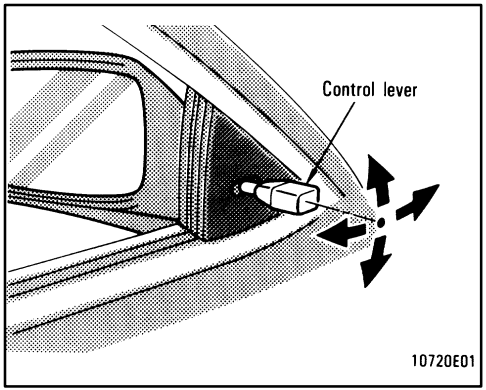

To adjust the rear view mirror, simply operate the control lever.

NOTICE

If ice should jam the mirror, do not operate the control or scrape the mirror face. Use a spray de-icer to free the mirror.

—Power rear view mirror control

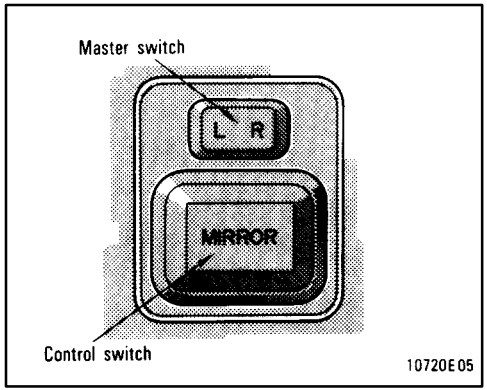

To adjust a power rear view mirror, first push the master switch in "L" (left) or "R" (right) depending on which mirror needs adjusting, then push the control switch in desired direction.

If the engine is not running, the key must be in the "ACC" position.

NOTICE
If ice should jam the mirror, do not operate the control or scrape the mirror face. Use a spray de-icer to free the mirror.

—Folding rear view mirrors

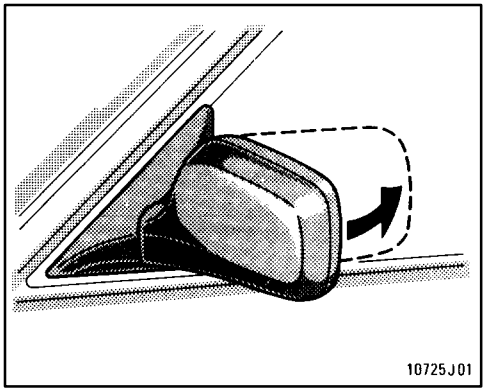

To fold the rear view mirror, push backward.

The rear view mirrors can be folded backward for parking in restricted areas.

Anti-glare inside rear view mirror

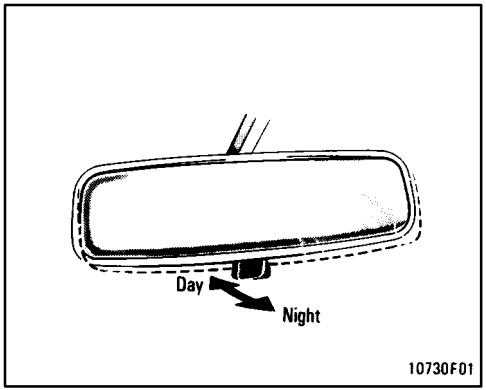

Pull the lever toward you to reduce glare from the headlights of the vehicle behind you during night driving.

Before adjusting the mirror to the position with most clarity, push the day-night change lever away from you (daylight driving position).

Remember that by reducing glare you also lose some rear view clarity.

Part 1

OPERATION OF INSTRUMENTS AND CONTROLS—

Chapter 1-4

Lights, Wipers and Defogger

- Headlights and turn signals
- Emergency flashers
- Instrument panel light control
- Interior light
- Personal light
- Luggage compartment light
- Windshield wipers and washer
- Rear window wiper and washer
- Rear window defogger

Headlights and turn signals

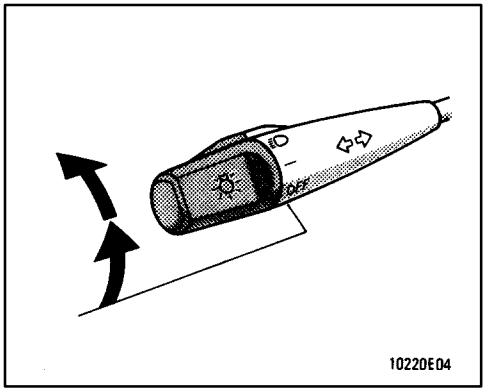

To turn the lights on, twist the knob on the end of the lever.

Daytime running light system (Canada only)—The headlights turn on when the parking brake is released with the engine started, even with the light switch in the “OFF” position. They will not go off until the ignition switch is turned off.

To turn on the other exterior lights and instrument panel lights, twist the knob to the first clickstop.

Under the daytime running light system, the headlights turn on at reduced intensity. Twist the knob to the second clickstop to turn to full intensity for driving at night.

FIRST CLICKSTOP: Only the parking, tail, license plate, side marker and instrument panel lights turn on.

SECOND CLICKSTOP: The headlights also turn on.

If you remove the key with the headlights left on, a buzzer reminds you to turn the lights off when you open the driver’s door.

NOTICE

To prevent the battery from being discharged, do not leave the lights on for a long period when the engine is not running.

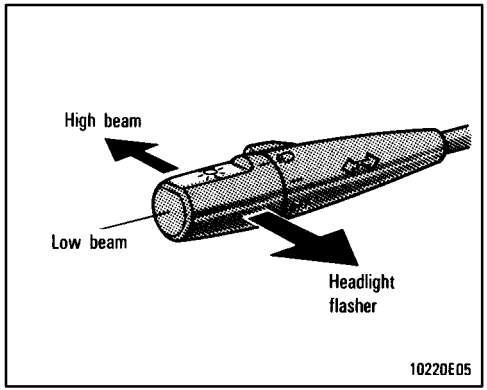

For high beam, push the lever away from you. Pull it toward you for low beam. For the headlight flasher, pull it further back.

A blue light in the instrument panel indicates high beam is on.

The headlight flasher works even when the headlight switch is off.

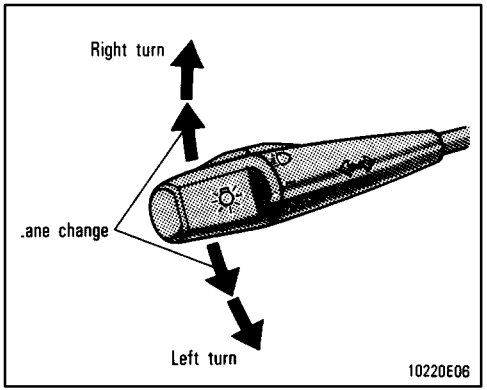

For signaling turns, move the lever up or down in the conventional manner.

The key must be in the ”ON” position.

The turn signal is self-cancelling after a turn, but after a lane change, you may have to cancel it by hand. You can also signal a lane change by moving the turn signal lever partway and holding it there. If the green light in the instrument panel flashes faster than normal, it indicates that the front or rear turn signal bulb has burned out.

Emergency flashers

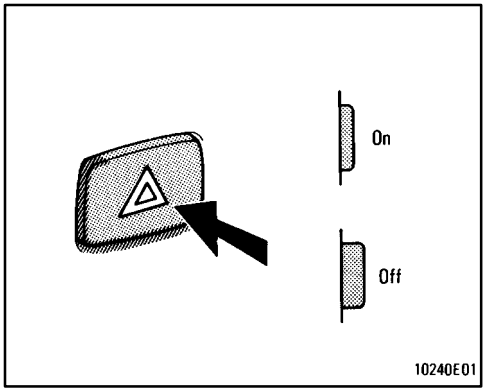

To turn on the emergency flashers, push the switch.

All the turn signal lights will flash.

Turn on the emergency flashers to warn other drivers if your vehicle must be stopped where it might be a traffic hazard.

Always pull as far off the road as possible.

The turn signal light switch will not work when the emergency flashers are operating.

NOTICE
To prevent the battery from being discharged, do not leave the switch on longer than necessary when the engine is not running.

Instrument panel light control

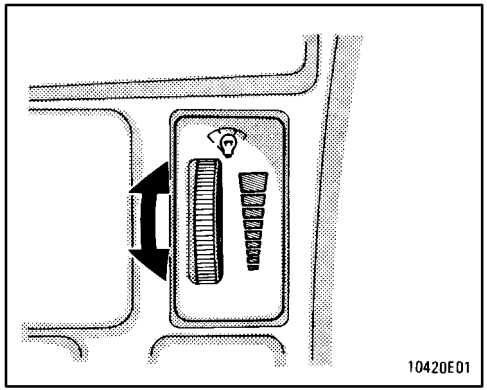

To adjust the brightness of the instrument panel lights, turn the dial.

Interior light

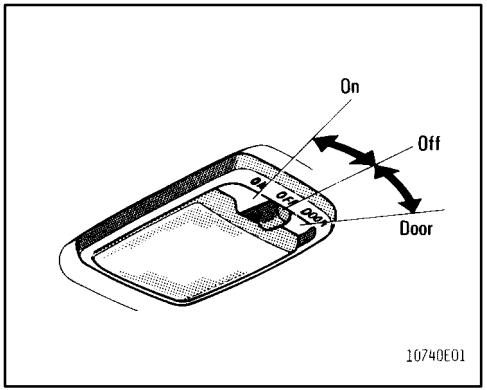

To turn on the interior light, slide the switch.

With the switch in the “DOOR” position, the light comes on when any of the side doors and back door are opened.

Personal light

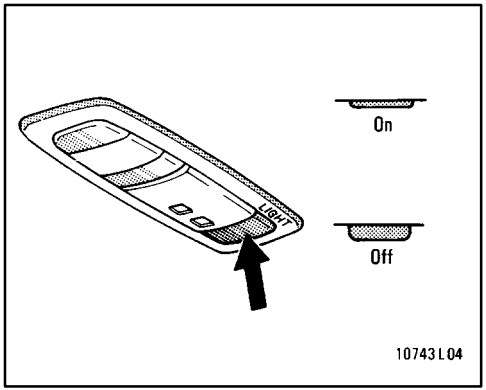

To turn on the personal light, push the switch. To turn it off, push the switch once again.

Luggage compartment light (wagon)

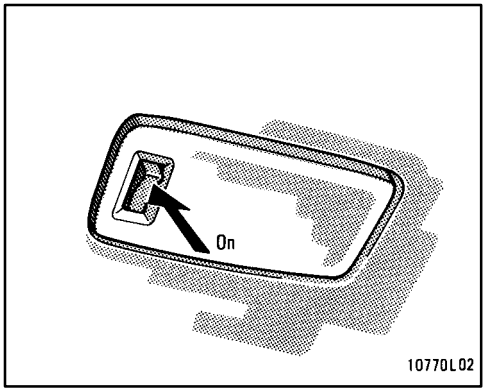

To turn the luggage compartment light on, open the back door and push the switch. Closing the back door will turn the light off.

Windshield wipers and washer (intermittent type without interval adjuster)

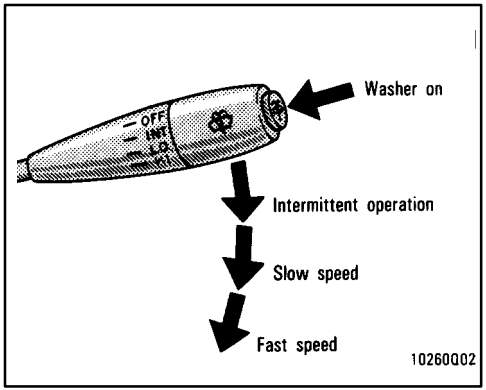

To turn the wipers on, move the lever. To make the washer squirt, push the button on the end of the lever.

The key must be in the ”ON” position.

The wipers will operate at intervals when the lever is in the ”INT” position.

If the washer does not work, check to see whether the washer tank is empty. For information on adding washer fluid, see “Adding washer fluid” in Chapter 7-3.

In cold weather, warm the windshield with the defroster before using the washer. This will help prevent icing, which could block your vision.

NOTICE

Do not operate the wipers if the windshield is dry. It may scratch the glass.

Windshield wipers and washer (intermittent type with interval adjuster)

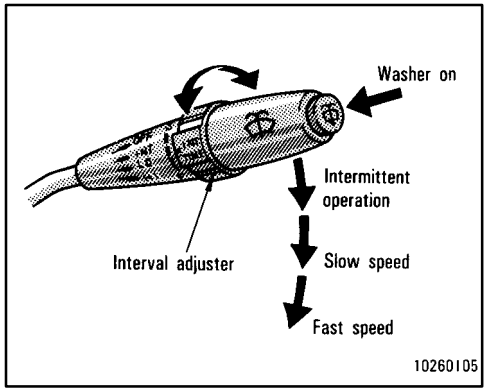

To turn the wipers on, move the lever. To make the washer squirt, push the button on the end of the lever.

The key must be in the “ON” position.

The wipers will operate at intervals when the lever is in the “INT” position. With the lever in this position, the wipers can be adjusted to operate at intervals of 3 to 10 seconds depending on the interval adjuster setting between “S” and “F”.

Also, the wipers will automatically operate a couple of times after the washer squirts even with the lever in the “OFF” position.

If the washer does not work, check to see whether the washer tank is empty. For information on adding washer fluid, see “Adding washer fluid” in Chapter 7-3.

In cold weather, warm the windshield with the defroster before using the washer. This will help prevent icing, which could block your vision.

NOTICE
Do not operate the wipers if the windshield is dry. It may scratch the glass.

Windshield wipers and washer (mist type)

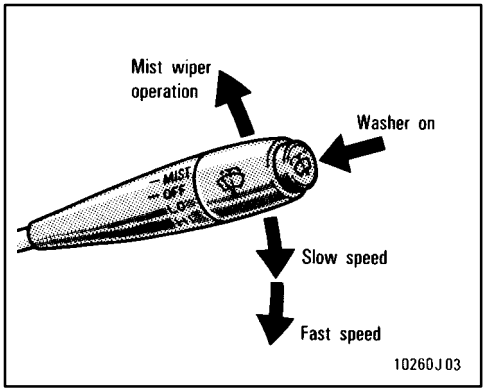

To turn the wipers on, move the lever. To make the washer squirt, push the button on the end of the lever.

The key must be in the “ON” position.

If a single wipe is desired in mist, push the lever to the “MIST” position and release it.

If the washer does not work, check to see whether the washer tank is empty. For information on adding washer fluid, see “Adding washer fluid” in Chapter 7-3.

In cold weather, warm the windshield with the defroster before using the washer. This will help prevent icing, which could block your vision.

NOTICE

Do not operate the wipers if the windshield is dry. It may scratch the glass.

Rear window wiper and washer

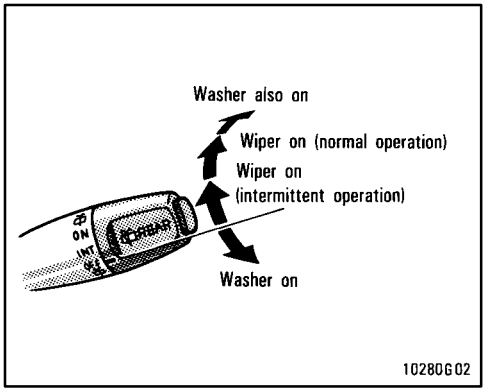

To turn the rear wiper and washer on, twist the knob at the end of the lever.

The key must be in the “ON” position.

The wipers will operate at intervals when the lever is in the “INT” position.

The washer squirts at the two marked knob positions. The knob will automatically return from these positions when it is released.

If the washer does not work, check to see whether the washer tank is empty. For information on adding washer fluid, see “Adding washer fluid” in Chapter 7-3.

NOTICE

Do not operate the rear wiper if the rear window is dry. It may scratch the glass.

Rear window defogger

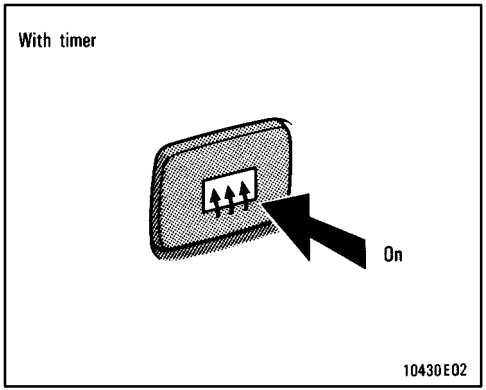

To defog or defrost the rear window, push the switch.

The key must be in the “ON” position.

The thin heater wires on the inside of the rear window will quickly clear the surfaces. An indicator light will illuminate to indicate the defogger is operating.

Push the switch once again to turn the defogger off.

With timer: The system will automatically shut off after the defogger has operated about 15 minutes.

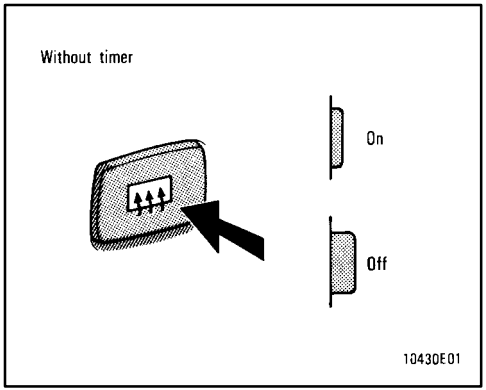

Make sure you turn the defogger off when the window is clear. Leaving the defogger on for a long time could cause the battery to discharge, especially during stop-and-go driving. The defogger is not designed for drying rain water or for melting snow.

NOTICE

- ***Without timer: To prevent the battery from being discharged, turn the switch on when the engine is running.***
- ***When cleaning the inside of the rear window, be careful not to scratch or damage the heater wires.***

Part 1

OPERATION OF INSTRUMENTS AND CONTROLS—

Chapter 1-5
Gauges, Meters and Service reminder indicators

- Fuel gauge
- Engine coolant temperature gauge
- Tachometer
- Odometer and trip meter
- Service reminder indicators and warning buzzers

Fuel gauge

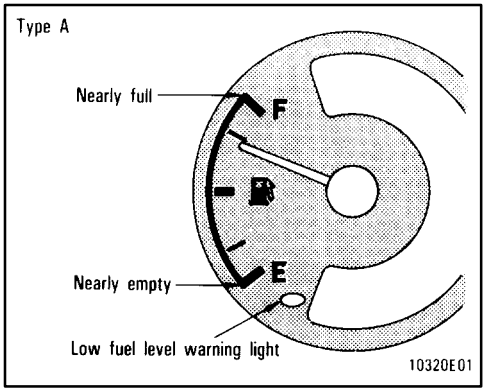

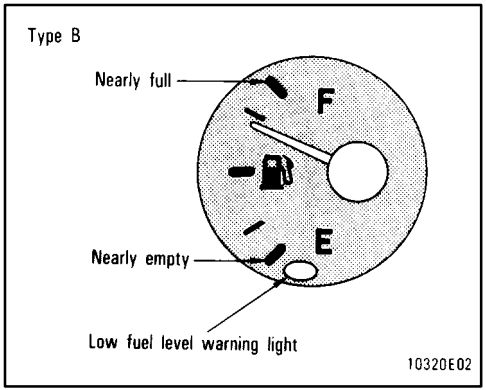

The gauge works when the ignition switch is on and indicates the approximate quantity of fuel remaining in the tank.

It is a good idea to keep the tank over 1/4 full.

This fuel gauge has a non-return type needle which remains at the last indicated position when the ignition switch is turned off.

If the fuel level approaches “E” or the low fuel level warning light comes on, fill the fuel tank as soon as possible.

If the fuel tank is completely empty, the malfunction indicator lamp comes on. Fill the fuel tank immediately.

The indicator lamp goes off after driving several times. If the indicator lamp does not go off, contact your Toyota dealer as soon as possible.

Engine coolant temperature gauge

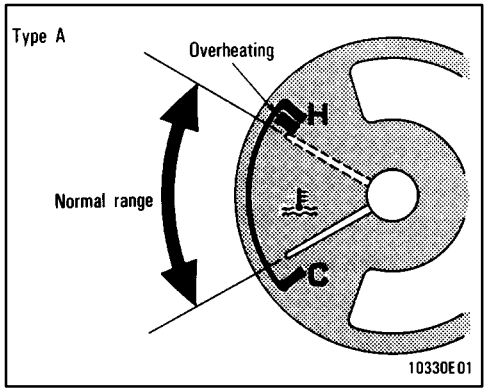

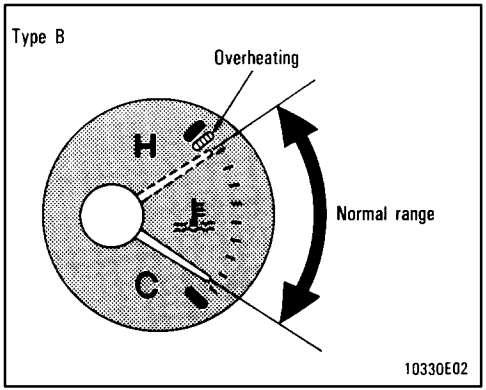

The gauge indicates the engine coolant temperature when the ignition switch is on. The engine operating temperature will vary with changes in weather and engine load.

If the needle points to the red zone or higher, stop your vehicle and allow the engine to cool.

Your vehicle may overheat during severe operating conditions, such as:

- Driving up a long hill on a hot day.
- Reducing speed or stopping after high speed driving.
- Idling for a long period with the air conditioning on in stop-and-go traffic.
- Towing a trailer.

NOTICE

◆ ***Do not remove the thermostat in the engine cooling system as this may cause the engine to overheat. The thermostat is designed to control the flow of coolant to keep the temperature of the engine within the specified operating range.***

◆ ***Do not continue driving with an overheated engine. See "If your vehicle overheats" in Part 4.***

Tachometer

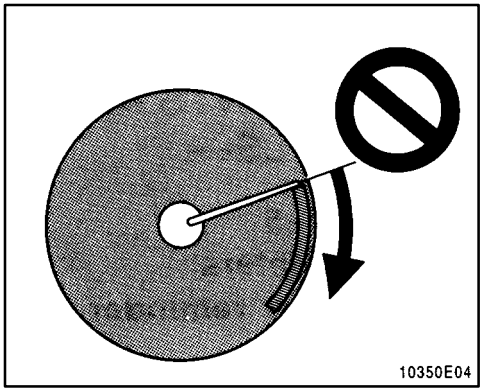

The tachometer indicates engine speed in thousands of rpm (revolutions per minute). Use it while driving to select correct shift points and to prevent engine lugging and overrevving.

Driving with the engine running too fast causes excessive engine wear and poor fuel economy. Remember, in most cases the slower the engine speed, the greater the fuel economy.

NOTICE

Do not let the indicator needle get into the red zone. This may cause severe engine damage.

Odometer and trip meter

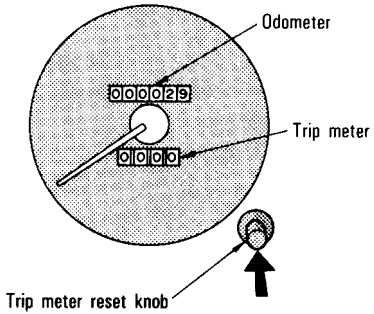

10340E02

The odometer records the total distance the vehicle has been driven. The trip meter may be set to zero to record the distance on each trip. To reset the trip meter, press the trip meter reset knob.

The black digits on white indicate tenths of kilometers or miles.

Service reminder indicators and warning buzzers

If the light or buzzer comes on...		Do this.
(a)	BRAKE (type A)	If parking brake is off, stop and check.
	(type B)	
(b)		Fasten seat belts.
	(Indicator and buzzer)	
(c)		Stop and check.
(d)		Stop and check.
(e)	Low fuel level warning light	Fill up tank.

10302

If the indicator or buzzer comes on...		Do this.
(f)	ABS (type A)	Take vehicle to Toyota dealer.
	(type B)	
(g)		Close all the side doors and back door.
(h)		Take vehicle to Toyota dealer immediately.
(i)	CHECK	Take vehicle to Toyota dealer.
(j)	Key reminder buzzer	Remove key.
(k)	Light reminder buzzer	Turn off lights.

10302

(a) Brake System Warning Light

This light has the following functions:

Parking brake reminder

If this light is on, make sure the parking brake is fully released. The light should go off.

Low brake fluid level warning

If this light comes on and stays on while you are driving, slow down and pull off the road. Then stop the vehicle carefully. There may be a problem somewhere in the brake system. Check the fluid level of the see-through reservoir.

To make sure the parking brake has not caused the warning light to come on, check to see that the parking brake is fully released.

If the brake fluid level is low...

At a safe place, test your brakes by starting and stopping.

- If you judge that the brakes still work adequately, drive cautiously to your nearest dealer or shop for repairs.
- If the brakes are not working, have the vehicle towed in for repairs. (For towing information, see Part 4.)

CAUTION

It is dangerous to continue driving normally when the brake fluid level is low.

If the brake fluid level is correct...

Have the warning system checked by your Toyota dealer.

(b) Seat Belt Reminder Light and Buzzer

Once the ignition key is turned to “ON” or “START”, the reminder light and buzzer come on if the driver’s seat belt is not fastened. Unless the driver fastens the belt, the light stays on and the buzzer stops after about 4 to 8 seconds.

(c) Discharge Warning Light

This light warns that the battery is being discharged.

If it comes on while you are driving, there is a problem somewhere in the charging system.

The engine ignition will continue to operate, however, until the battery is discharged. Turn off the air conditioning, blower, radio, etc., and drive directly to the nearest Toyota dealer or repair shop.

NOTICE

Do not continue driving if the engine drive belt is broken or loose.

(d) Low Oil Pressure Warning Light

This light warns that the engine oil pressure is too low.

If it flickers or stays on while you are driving, pull off the road to a safe place and stop the engine immediately. Call a Toyota dealer or qualified repair shop for assistance.

The light may occasionally flicker when the engine is idling or it may come on briefly after a hard stop. There is no cause for concern if it then goes out when the engine is accelerated slightly.

The light may come on when the oil level is extremely low. It is not designed to indicate low oil level, and the oil level must be checked using the level dipstick.

NOTICE

Do not drive the vehicle with the warning light on—even for one block. It may ruin the engine.

(e) Low Fuel Level Warning Light

This light comes on when the fuel level in the tank becomes nearly empty. Fill up the tank as soon as possible.

(f) "ABS" Warning Light

This light warns that there is a problem somewhere in your anti-lock brake system.

If the light comes on while you are driving, have your vehicle checked by your Toyota dealer as soon as possible.

The light will come on when the ignition key is turned to the "ON" position. After about 3 seconds, the light will go off.

When the "ABS" warning light is on (and the brake system warning light is off), the brake system operates conventionally but without anti-lock function.

(g) Open Door Warning Light

This light remains on until all the side doors and back door are completely closed.

(h) SRS Airbag Warning Light

This light will come on when the ignition key is turned to the "ACC" or "ON" position. After about 6 seconds, the light will go off. This means the airbag system is operating properly.

The warning light system monitors the airbag sensor assembly, inflators, warning light, interconnecting wiring and power sources.

If either of the following conditions occurs, this indicates a malfunction somewhere in the parts monitored by the warning light system. Contact your Toyota dealer as soon as possible to service the vehicle.

- The light does not come on when the ignition key is turned to the "ACC" or "ON" position or remains on.
- The light comes on while driving.

(i) Malfunction Indicator Lamp

This lamp comes on in the following cases.

a. The fuel tank is completely empty. (See "Fuel gauge" in Chapter 1-5 for instructions.)

b. There is a problem somewhere in your engine or automatic transmission electrical system.

If it comes on while you are driving in case b, have your vehicle checked/repaired by your Toyota dealer as soon as possible.

(j) Key Reminder Buzzer

This buzzer reminds you to remove the key when you open the driver's door with the ignition key in the "ACC" or "LOCK" position.

(k) Light Reminder Buzzer

This buzzer will sound if the driver's door is opened with the key removed from the ignition switch and the headlight switch left on.

CHECKING SERVICE REMINDER INDICATORS (except the low fuel level warning light)

1. Apply the parking brake.
2. Open one of the side doors or back door.

The open door warning light should come on.

3. Close the door.

The open door warning light should go off.

4. Turn the ignition key to "ACC".

The SRS airbag warning light should come on. It goes off after about 6 seconds.

5. Turn the ignition key to "ON", but do not start the engine.

All the service reminder indicators except the open door warning light and SRS airbag warning light should come on. The "ABS" warning light goes off after about 3 seconds.

If any service reminder indicators or warning buzzer do not function as described above, either the bulb is burned out or the circuit is in need of repair. Have it checked by your Toyota dealer as soon as possible.

Part 1

OPERATION OF INSTRUMENTS AND CONTROLS—

Chapter 1-6

Ignition switch, Transmission and Parking brake

- Ignition switch with steering lock
- Automatic transmission
- Manual transmission
- Parking brake
- Cruise control

Ignition switch with steering lock

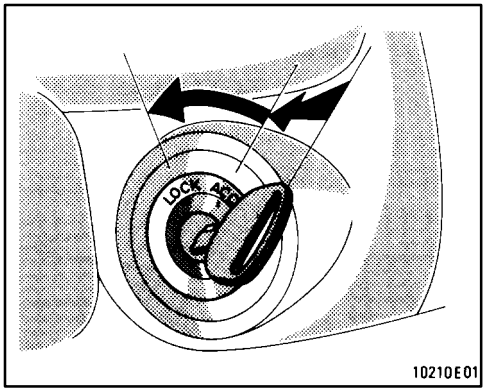

“Start”—Starter motor on. The key will return to the “ON” position when released.

For starting tips, see Part 3.

“ON”—Engine on and all accessories on.

This is the normal driving position.

“ACC”—Accessories such as the radio operate, but the engine is off.

If you leave the key in the “ACC” or “LOCK” position and open the driver’s door, a buzzer will remind you to remove the key.

“LOCK”—Engine is off and the steering wheel is locked. The key can be removed only at this position.

You must push in the key to turn the key from “ACC” to the “LOCK” position. On vehicles with an automatic transmission, the selector lever must be in the “P” position before pushing the key.

When starting the engine, the key may seem stuck at the “LOCK” position. To free it, first be sure the key is pushed all the way in, and then rock the steering wheel slightly while turning the key gently.

CAUTION

For manual transmission:

Never remove the key when the vehicle is moving, as this will lock the steering wheel and result in loss of steering control.

NOTICE

Do not leave the key in the “ON” position if the engine is not running. The battery will discharge and the ignition could be damaged.

Automatic transmission (3-speed type)

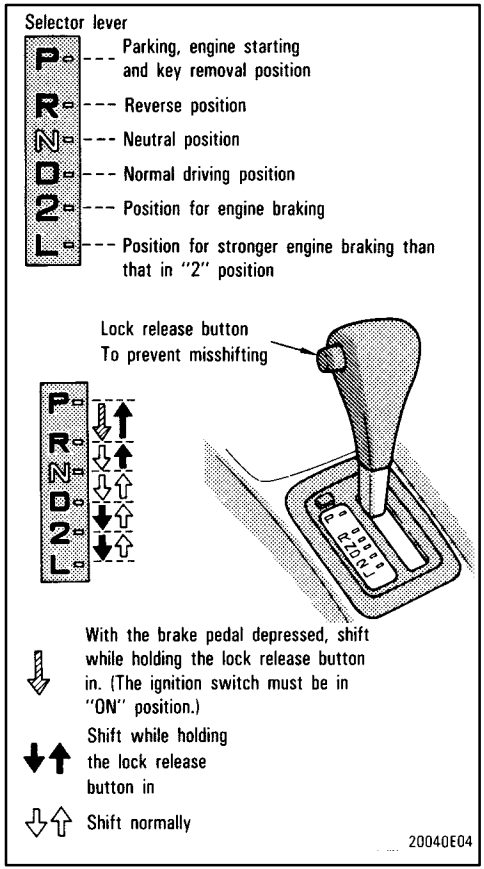

Your automatic transmission has a shift lock system to minimize the possibility of incorrect operation. This means you can only shift out of "P" position when the brake pedal is depressed (with the ignition switch in "ON" position and the lock release button depressed).

(a) Normal Driving

1. Start the engine as instructed in "How to start the engine" in Part 3. The transmission must be in "P" or "N".

2. With your foot holding down the brake pedal, shift the selector lever to "D".

In "D" position, the automatic transmission system will select the most suitable gear for running conditions such as normal cruising, hill climbing, hard towing, etc.

CAUTION

Never put your foot on the accelerator pedal while shifting.

3. Release the parking brake and brake pedal. Depress the accelerator pedal slowly for smooth starting.

(b) Using engine braking

To use engine braking, you can downshift the transmission as follows:

- Shift into the "2" position when the vehicle speed is lower than the maximum allowable speed for second gear. The transmission will downshift to the second gear and more engine braking will be obtained.
- Shift into the "L" position when the vehicle speed is lower than the maximum allowable speed for "L" position. The transmission will downshift to the first gear and maximum engine braking will be applied.

MAXIMUM ALLOWABLE SPEEDS

"2" . . . . . 112 km/h (70 mph)
"L" . . . . . 62 km/h (38 mph)

CAUTION

Be careful when downshifting on a slippery surface. Abrupt shifting could cause the vehicle to spin or skid.

NOTICE

- ***Be careful not to overrev the engine. Watch the tachometer to keep engine rpm from going into the red zone. The maximum allowable speed (approximate) for each position is given above for your reference.***
- ***Do not continue hill climbing for a long time in the "2" or "L" position. This may cause severe automatic transmission damage from overheating. To prevent such damage, use "D" position for hill climbing or hard towing.***

(c) Backing up

1. Bring the vehicle to a complete stop.
2. With the brake pedal held down with your foot, shift the selector lever to the "R" position.

NOTICE

Never shift into reverse while the vehicle is moving.

(d) Parking

1. Bring the vehicle to a complete stop.
2. Pull the parking brake lever up fully to securely apply the parking brake.
3. With the brake pedal pressed down, shift the selector lever to the "P" position.

CAUTION

While the vehicle is moving, never attempt to move the selector lever into "P" position under any circumstances. Serious mechanical damage and loss of vehicle control may result.

(e) Good driving practice

CAUTION

Always keep your foot on the brake pedal while stopped with the engine running. This prevents the vehicle from creeping.

NOTICE

Do not hold the vehicle on an upgrade with the accelerator pedal. It can cause the transmission to overheat. Always use the brake pedal or parking brake.

(f) If you cannot shift the selector lever out of "P" position

If you cannot shift the selector lever from "P" position even though the brake pedal is depressed, use the shift lock override button. For instructions, see "If you cannot shift automatic transmission selector lever" in Part 4.

Automatic transmission (4-speed type)

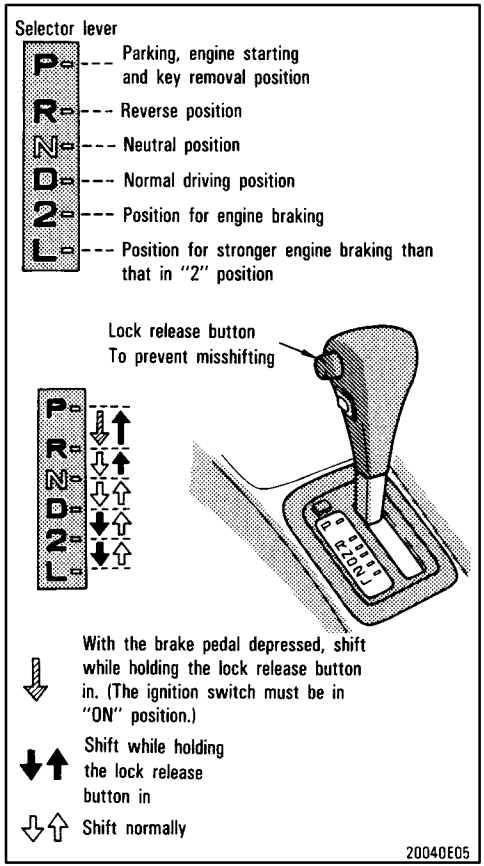

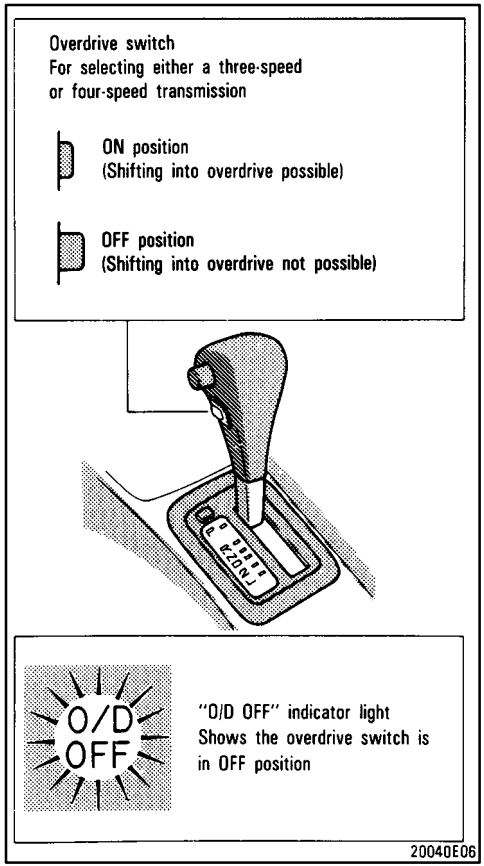

Your automatic transmission has a shift lock system to minimize the possibility of incorrect operation. This means you can only shift out of "P" position when the brake pedal is depressed (with the ignition switch in "ON" position and the lock release button depressed).

(a) Normal Driving

1. Start the engine as instructed in "How to start the engine" in Part 3. The transmission must be in "P" or "N".

2. With your foot holding down the brake pedal, shift the selector lever to "D".

In "D" position, the automatic transmission system will select the most suitable gear for running conditions such as normal cruising, hill climbing, hard towing, etc.

Always turn the overdrive switch on for better fuel economy and quieter driving. If the engine coolant temperature is low, the transmission will not shift into the overdrive gear even with the overdrive switch on.

CAUTION

Never put your foot on the accelerator pedal while shifting.

3. Release the parking brake and brake pedal. Depress the accelerator pedal slowly for smooth starting.

(b) Using engine braking

To use engine braking, you can downshift the transmission as follows:

- Turn off the overdrive switch. The "O/D OFF" indicator light will come on and the transmission will downshift to the third gear.
- Shift into the "2" position. The transmission will downshift to the second gear when the vehicle speed drops down to or lower than the maximum allowable speed for second gear, and more powerful engine braking will be obtained.
- Shift into the "L" position. The transmission will downshift to the first gear when the vehicle speed drops down to or lower than the maximum allowable speed for "L" position and maximum engine braking will be applied.

MAXIMUM ALLOWABLE SPEEDS

"2" . . . . . 110 km/h (68 mph)
"L" . . . . . 60 km/h (38 mph)

CAUTION

Be careful when downshifting on a slippery surface. Abrupt shifting could cause the vehicle to spin or skid.

NOTICE

- ***Be careful not to overrev the engine. Watch the tachometer to keep engine rpm from going into the red zone. The maximum allowable speed (approximate) for each position is given above for your reference.***
- ***Do not continue hill climbing for a long time in the "2" or "L" position. This may cause severe automatic trasmission damage from overheating. To prevent such damage, use "D" position for hill climbing or hard towing.***

(c) Backing up

1. Bring the vehicle to a complete stop.
2. With the brake pedal held down with your foot, shift the selector lever to the "R" position.

NOTICE

Never shift into reverse while the vehicle is moving.

(d) Parking

1. Bring the vehicle to a complete stop.
2. Pull the parking brake lever up fully to securely apply the parking brake.
3. With the brake pedal pressed down, shift the selector lever to the "P" position.

CAUTION

While the vehicle is moving never attempt to move the selector lever into "P" position under any circumstances. Serious mechanical damage and loss of vehicle control may result.

(e) Good driving practice

- If the transmission is repeatedly upshifted and downshifted between third gear and overdrive when climbing a gentle slope, the overdrive switch should be turned off. Be sure to turn the switch on immediately afterward.
- When towing a trailer, in order to maintain engine braking efficiency, do not use overdrive.

CAUTION

Always keep your foot on the brake pedal while stopped with the engine running. This prevents the vehicle from creeping.

NOTICE

Do not hold the vehicle on an upgrade with the accelerator pedal. It can cause the transmission to overheat. Always use the brake pedal or parking brake.

(f) If you cannot shift the selector lever out of "P" position

If you cannot shift the selector lever from "P" position even though the brake pedal is depressed, use the shift lock override button. For instructions, see "If you cannot shift automatic transmission slelector lever" in Part 4.

Manual transmission

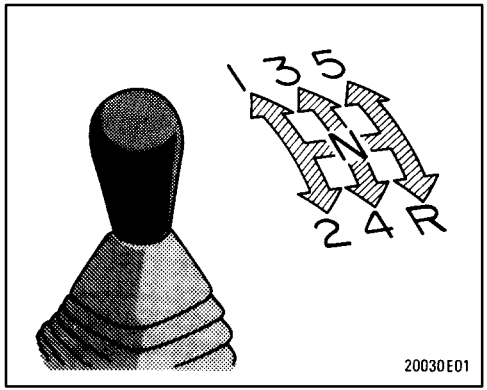

The shift pattern is conventional as shown above.

Press the clutch pedal down fully while shifting, and then release it slowly. Do not rest your foot on the pedal while driving, because it will cause clutch trouble. And do not use the clutch to hold the vehicle when stopped on an uphill grade—use the parking brake.

Recommended shifting speeds

The transmission is fully synchronized and upshifting or downshifting is easy.

For the best compromise between fuel economy and vehicle performance, you should upshift or downshift at the following speeds:

Low altitude

—1219 m (4000 ft) or lower

gear	km/h (mph)
1 to 2 or 2 to 1	24 (15)
2 to 3 or 3 to 2	37 (23)
3 to 4 or 4 to 3	64/45*1 (40/28*1)
4 to 5 or 5 to 4	72/64*1 (45/40*1)

*1: For constant-speed cruise or constant-speed cruise after deceleration.

High altitude

—Higher than 1219 m (4000 ft)

Upshifting

gear	km/h (mph)
1 to 2	24 (15)
2 to 3	40/57*2 (25/36*2)
3 to 4	64/72*2 (40/45*2)
4 to 5	72/88*2 (45/55*2)

Downshifting

gear	km/h (mph)
2 to 1	24 (15)
3 to 2	40 (25)
4 to 3	64 (40)
5 to 4	72 (45)

*2: 4A-FE only—Applicable under heavy acceleration conditions.

Upshifting too soon or downshifting too late will cause lugging, and possibly pinging. Regularly revving the engine to maximum speed in each gear will cause excessive engine wear and high fuel comsumption.

Maximum allowable speeds

To get on a highway or to pass slower traffic, maximum acceleration may be necessary. Make sure you observe the following maximum allowable speeds in each gear:

4A-FE engine

gear	km/h (mph)
1	46 (29)
2	86 (54)
3	126 (78)
4	170 (106)

7A-FE engine

gear	km/h (mph)
1	53 (33)
2	88 (55)
3	128 (80)
4	173 (108)

NOTICE

Do not downshift if you are going faster than the maximum allowable speed for the next lower gear.

Good driving practice

- If it difficult to shift into reverse, put the transmission in neutral, release the clutch pedal momentarily, and then try again.
- When towing a trailer, in order to maintain engine braking efficiency, do not use the fifth gear.

CAUTION

Be careful when downshifting on a slippery surface. Abrupt shifting could cause the vehicle to spin or skid.

NOTICE

Make sure the vehicle is completely stopped before shifting into reverse.

Parking brake

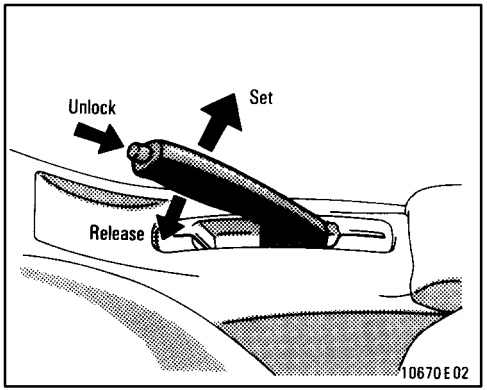

To set: Pull up the lever.

To release: Pull up slightly, press the thumb button, and lower.

Before leaving your vehicle, firmly apply the parking brake. For better holding power, first depress the brake pedal and hold it while setting the parking brake.

CAUTION

Before driving, be sure the parking brake is fully released and the parking brake reminder light is off.

Cruise control

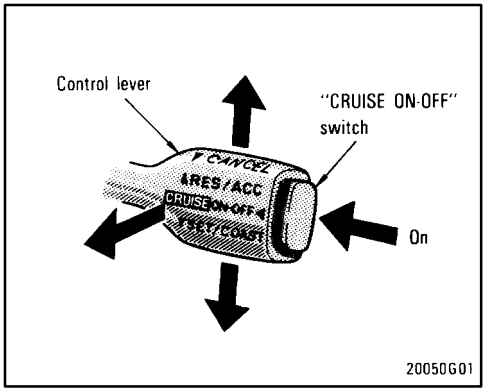

The cruise control allows you to cruise the vehicle at a desired speed over 40 km/h (25 mph) even with your foot off the accelerator pedal.

Your cruising speed can be maintained up or down grades within the limits of engine performance, although a slight speed change may occur when driving up or down the grades. On steeper hills, a greater speed change will occur so it is better to drive without the cruise control.

CAUTION

- **To help maintain maximum control of your vehicle, do not use the cruise control when driving in heavy or varying traffic, or on slippery (rainy, icy or snow-covered) or winding roads.**
- **Avoid vehicle speed increases when driving downhill. If the vehicle speed is too fast in relation to the cruise control set speed, cancel the cruise control then downshift the transmission to use engine braking to slow down.**

TURNING ON THE SYSTEM

To operate the cruise control, push the "CRUISE ON-OFF" switch. This turns the system on. The indicator light in the instrument panel shows that you can now set the vehicle at a desired cruising speed. Another push will turn the system completely off.

CAUTION

To avoid accidental cruise control engagement, keep the "CRUISE ON-OFF" switch off when not using the cruise control.

SETTING AT A DESIRED SPEED

On vehicles with automatic transmission, the transmission must be in "D" before you set the cruise control speed.

Bring your vehicle to the desired speed, press the "SET/COAST" direction and release it. This sets the vehicle at that speed. Now you may take your foot off the accelerator pedal. If you need acceleration—for example, when passing—depress the accelerator pedal enough for the vehicle to exceed the set speed. When you release it, the vehicle will return to the speed set prior to the acceleration.

CAUTION

For manual transmission:

While driving with the cruise control on, do not shift to neutral without depressing the clutch pedal, as this may cause engine racing or overreving.

CANCELLING THE PRESET SPEED

You can cancel the preset speed by:

a. Pulling the control lever in the "CANCEL" direction and releasing it.

b. Depressing the brake pedal.

c. Depressing the clutch pedal (manual transmission).

If the vehicle speed falls below about 40 km/h (25 mph), the preset speed will automatically cancel out.

If the vehicle speed drops 16 km/h (10 mph) below the preset speed, the preset speed will also automatically cancel out.

If the preset speed automatically cancels out other than for the above cases, have your vehicle checked by your Toyota dealer at the earliest opportunity.

RESETTING AT A FASTER SPEED

Press the control lever upward in the "RES/ACC" direction and hold it. Release the lever when the desired speed is attained. While the lever is held upward, the vehicle will gradually gain speed.

However, a faster way to reset is to accelerate the vehicle and then press the lever downward in the "SET/COAST" direction.

RESETTING AT A SLOWER SPEED

Push the control lever downward in the "SET/COAST" direction and hold it. Release the lever when the desired speed is attained. While the lever is held downward, the vehicle speed will gradually decrease.

However, a faster way to reset is to depress the brake pedal and then press the control lever downward in the “SET/COAST” direction.

RESUMING THE PRESET SPEED

If the preset speed is cancelled by pulling the control lever or by depressing the brake pedal or clutch pedal, pushing the lever up in the “RES/ACC” direction will restore the speed set prior to cancellation.

However, once the vehicle speed falls below about 40 km/h (25 mph), the preset speed will not be resumed.

CRUISE CONTROL FAILURE WARNING

If the “CRUISE” indicator light in the instrument cluster flashes when using the cruise control, there is some trouble in the cruise control system. Contact your Toyota dealer and have your vehicle inspected.

Part 1

OPERATION OF INSTRUMENTS AND CONTROLS—

Chapter 1-7

Car audio system and Air conditioning system

- Car audio system operating tips
- AM-FM radio with electronic tuner
- AM-FM radio with electronic tuner and cassette tape player
- Air conditioning controls
- Heater controls
- Side vents

Car audio system operating tips

You can listen to the car audio system when the ignition key is at "ON" or "ACC". However, if the engine is not running, the key must be in the "ACC" position.

ILLUMINATION CONTROL LOGIC

On some audio-units, when the instrument panel lights are on, the letters on operable buttons of the mode in current use light up together with the mode selection and eject buttons.

RADIO

FM reception tips

Most of us are not aware that a vehicle is not an ideal place to listen to a radio. Because it moves, reception conditions change continuously. Buildings, terrain, signal distance and noise from other vehicles are all working against good reception. Some FM reception conditions may appear to be problems even though they are normal.

The following characteristics are normal for a given reception area, and they do not indicate any problem with the radio itself.

- **Fading and Drifting**: On the average, the broadcast range of FM stations is limited to about 40 km (25 miles), except for some high power stations.

  If a vehicle is moving away from the desired station's transmitter, the signal will tend to fade and/or drift. This phenomenon is more noticeable with FM than with AM, and is accompanied by distortion.

  Fading and drifting can be minimized to a certain degree by fine tuning, or you should tune in to a stronger signal.
- **Static and Fluttering**: When the line-of-sight path between a transmitter and vehicle is blocked by large buildings or the like, static or fluttering may occur because of the characteristic of FM. In a similar effect, a fluttering noise is sometimes heard when driving along a tree-lined road.

  This static and fluttering can be reduced by adjusting the tone control for greater bass response until the disturbance has passed.
- **Multipath**: Because of the reflection characteristics of FM, direct and reflected signals may reach the antenna at the same time (a phenomenon called multipath reception) and cancel each other out. As a vehicle moves through these electronic dead spots, the listener may hear a momentary flutter or lose reception.

- **Station swapping**: When two FM stations are close to each other, and an electronic dead spot, such as is caused by static or multipath reception, interrupts the original signal, sometimes the stronger second signal is picked up automatically until the original one returns. This swapping can also occur as you drive away from the selected station and approach another station with a stronger signal.

On models with a power antenna, the antenna automatically extends to its full height when the radio and ignition are turned on.

To lower the power antenna, turn off the audio system by pushing “PWR.VOL”, or turn the ignition key to “LOCK”.

On some models, the power antenna automatically retracts when the radio mode is switched off to turn on the cassette tape player.

Before extending the power antenna, confirm that no one is close enough to get injured by it.

NOTICE

To prevent damage to the antenna, make sure it is retracted before driving your vehicle through an automatic car wash.

CASSETTE TAPE PLAYER

Use only undamaged cassette tapes of good quality. Avoid using tapes with a total playing time longer than 90 minutes.

Using damaged tapes will cause trouble with the tape player. Longer tapes are not recommended because of their thinness.

Before inserting a cassette, make sure the tape is not slack and that the label is firmly stuck on the shell.

Wind the tape firmly by turning the hub with a pencil or the like.

Be careful not to touch the exposed tape surface.

When not in use, take the cassette out of the player, put it back into its case and store it away from dust, magnets and direct sunlight.

Leaving cassettes on the dashboard in the sun could damage your tapes.

Keep the playback head, capstan and pinch roller clean.

Remove tape coating residue accumulated on the head, capstan and pinch roller once or twice a month. A cleaning tape is available on the market.

NOTICE

Do not oil any part of the player and do not insert anything other than cassette tapes into the slot, or the tape player may be damaged.

AM•FM radio with electronic tuner (type A)

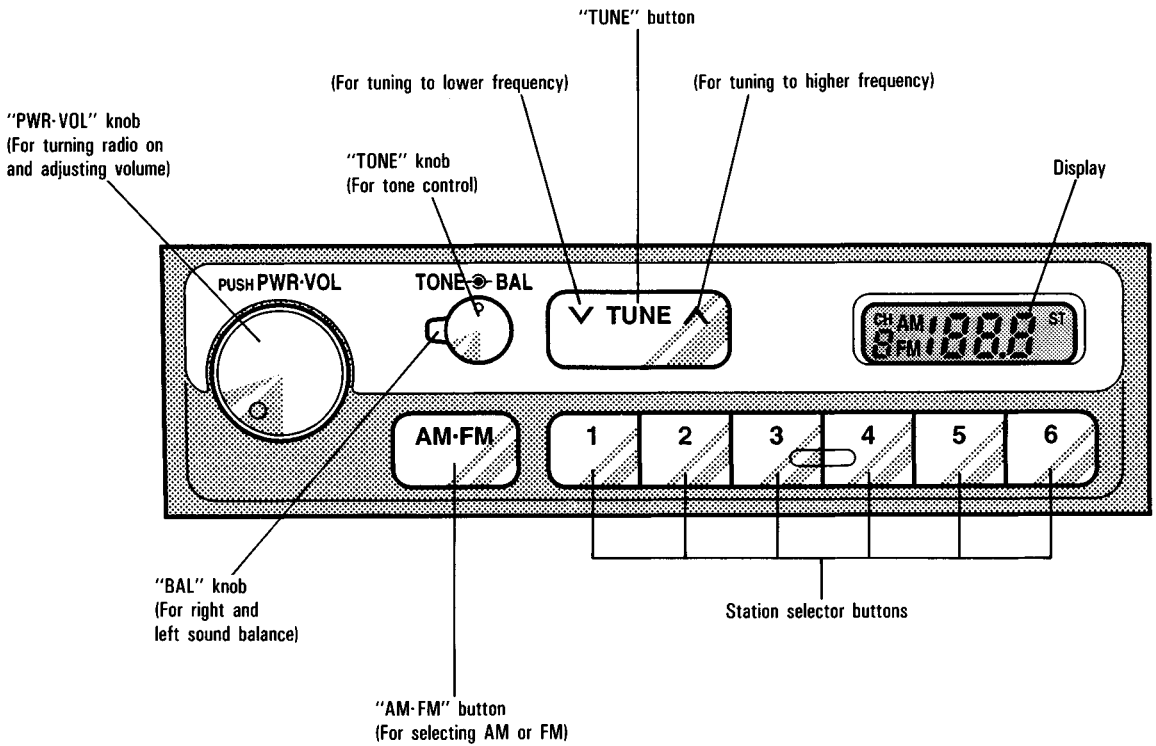

10610-10

(a) Listening to the radio

1. Push the “PWR•VOL” knob to turn the radio on.

2. Turn the “PWR•VOL” knob to adjust the volume.

3. Tune in the desired station. (See “(b) Selecting a station” and “(c) Presetting a station”.)

The radio will change automatically to stereo reception when an FM stereo broadcast is being received. At the same time, “ST” will appear on the display. When the receiving signal gets weak, the channel separation will automatically be reduced for the lowest noise. If the signal becomes extremely weak, the radio will switch over to monaural reception.

4. Adjust the tone and sound balance. (See “(d) Adjusting the tone” and “(e) Adjusting the sound balance”.)

5. To turn the radio off, push the “PWR•VOL” knob once again.

(b) Selecting a station

1. Push the “AM•FM” button to select either an AM or FM broadcast. “AM” or “FM” will appear on the display.

2. Tune in the desired station using one of the following methods. The frequency will appear on the display.

Preset tuning: Use for tuning-in to a desired preset station.

Push the station selector button which has been preset to the desired station. The radio will tune in to the station and the button number will appear on the display. (See “(c) Presetting a station”.)

Seek tuning: Use for automatic station search and stop.

Push either side of the “TUNE” button and hold it until a beep is heard. The radio will begin seeking up or down for a station of the nearest frequency and will stop on reception. Each time you push the button, stations will be sought out one after another.

Manual tuning

Push either side of the “TUNE” button for less than 0.5 second. Each time you push the button, the radio will step up or down to another frequency where stations could exist.

(c) Presetting a station

1. Tune in the desired station. (See “(b) Selecting a station”.)

2. Push one of the station selector buttons and hold it until a beep is heard. This sets the station to the button and the button number will appear on the display.

Each button can store one AM station and one FM station. To change the preset station to a different one, follow the same procedure.

The preset station will be cancelled when the power source is severed (battery disconnected, burnt fuse, etc.).

(d) Adjusting the tone

Turn the “TONE” knob.

(e) Adjusting the sound balance

Turn the “BAL” knob.

AM•FM radio with electronic tuner (type B)

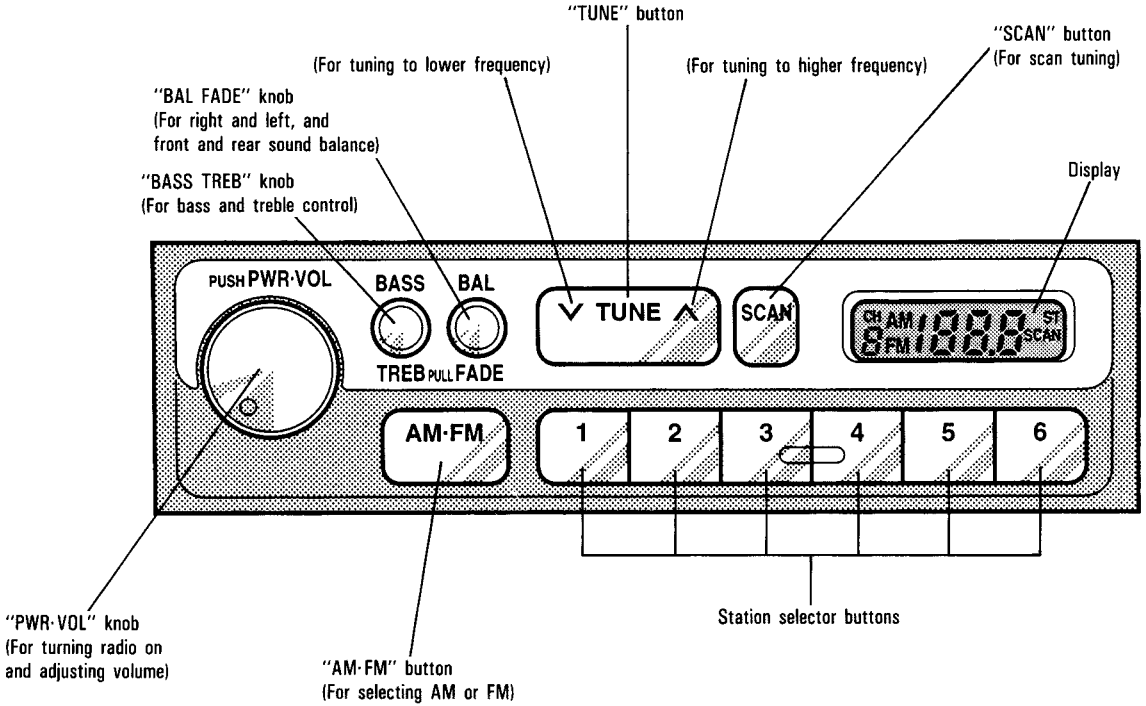

10610-11

(a) Listening to the radio

1. Push the “PWR•VOL” knob to turn the radio on.

2. Turn the “PWR•VOL” knob to adjust the volume.

3. Tune in the desired station. (See “(b) Selecting a station” and “(c) Presetting a station”.)

The radio will change automatically to stereo reception when an FM stereo broadcast is being received. At the same time, “ST” will appear on the display. When the receiving signal gets weak, the channel separation will automatically be reduced for the lowest noise. If the signal becomes extremely weak, the radio will switch over to monaural reception.

4. Adjust the tone and sound balance. (See “(d) Adjusting the tone” and “(e) Adjusting the sound balance”.)

5. To turn the radio off, push the “PWR•VOL” knob once again.

(b) Selecting a station

1. Push the “AM•FM” button to select either an AM or FM broadcast. “AM” or “FM” will appear on the display.

2. Tune in the desired station using one of the following methods. The frequency will appear on the display.

Preset tuning: Use for tuning-in to a desired preset station.

Push the station selector button which has been preset to the desired station. The radio will tune in to the station and the button number will appear on the display. (See “(c) Presetting a station”.)

Seek tuning: Use for automatic station search and stop.

Push either side of the “TUNE” button and hold it until a beep is heard. The radio will begin seeking up or down for a station of the nearest frequency and will stop on reception. Each time you push the button, stations will be sought out one after another.

Scan tuning: Use for station-to-station scanning.

Push the “SCAN” button. With “SCAN” on the display, the radio will automatically seek out a station of a higher frequency, hold it for 5 seconds and scan to the next. To continue listening to the broadcast of your choice, simply push the “SCAN” button once again.

Manual tuning

Push either side of the “TUNE” button for less than 0.5 second. Each time you push the button, the radio will step up or down to another frequency where stations could exist.

(c) Presetting a station

1. Tune in the desired station. (See “(b) Selecting a station”.)

2. Push one of the station selector buttons and hold it until a beep is heard. This sets the station to the button and the button number will appear on the display.

Each button can store one AM station and one FM station. To change the preset station to a different one, follow the same procedure.

The preset station will be cancelled when the power source is severed (battery disconnected, burnt fuse, etc.).

(d) Adjusting the tone

To adjust a low-pitched tone, push the “BASS TREB” knob (if pushed in) and turn it.

To adjust a high-pitched tone, push the “BASS TREB” knob (if pushed in), pull it fully out and turn it.

(e) Adjusting the sound balance

To balance the sound between the right and left speakers, push the “BAL FADE” knob (if pushed in) and turn it.

To balance the sound between the front and rear speakers, push the “BAL FADE” knob (if pushed in), pull it fully out and turn it.

AM•FM radio with electronic tuner and cassette tape player

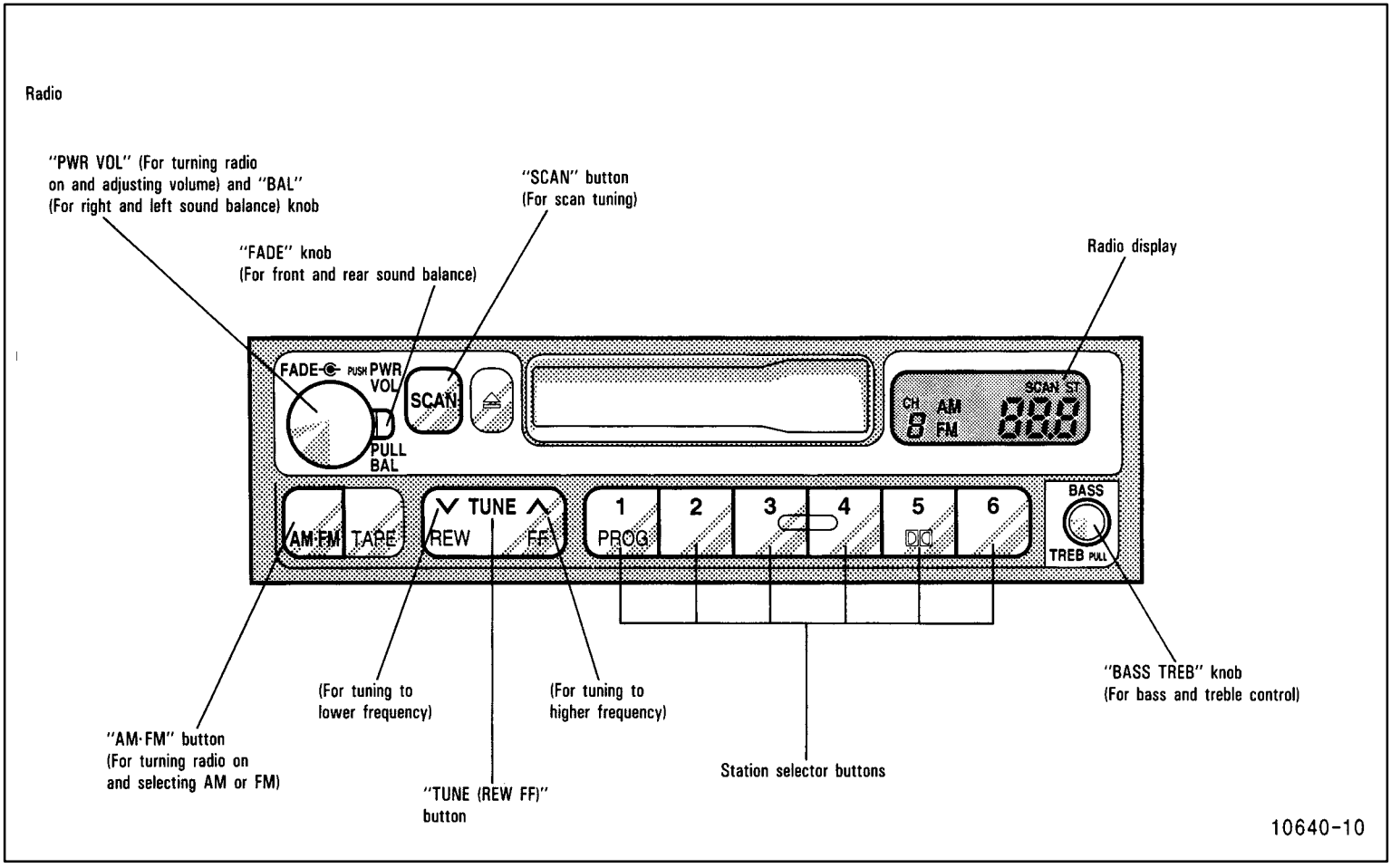

Cassette tape player

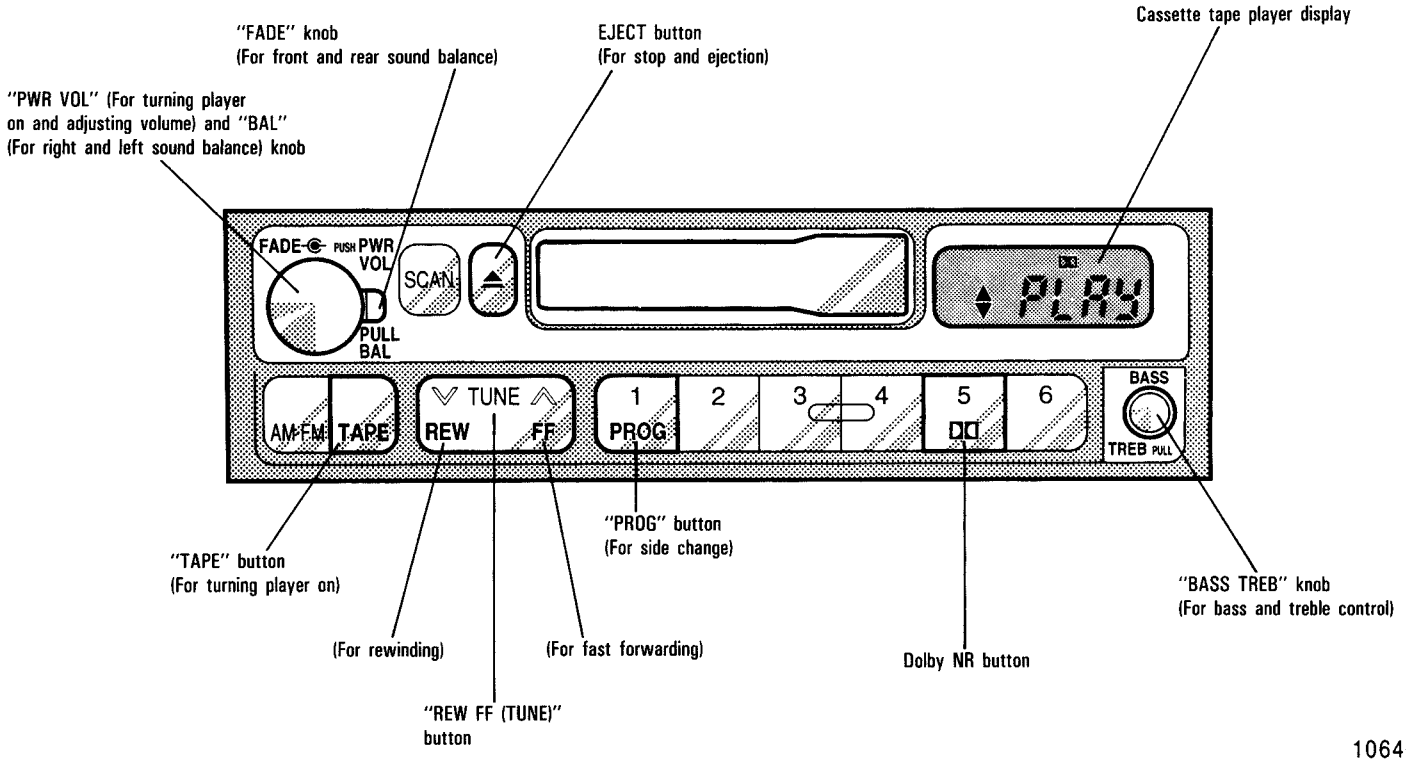

10640-11

(a) Listening to the radio

1. Push the “AM•FM” button to turn the radio on and select either an AM or FM broadcast.

“AM” or “FM” will appear on the display.

The radio can also be turned on by pushing the “PWR VOL” knob if the radio was on when the system was turned off.

2. Turn the “PWR VOL” knob to adjust the volume.

3. Tune in the desired station. (See “(b) Selecting a station” and “(c) Presetting a station”.)

The radio will change automatically to stereo reception when an FM stereo broadcast is being received. At the same time, “ST” will appear on the display. When the receiving signal gets weak, the channel separation will automatically be reduced for the lowest noise. If the signal becomes extremely weak, the radio will switch over to monaural reception.

4. Adjust the tone and sound balance. (See “(d) Adjusting the tone” and “(e) Adjusting the sound balance”.)

5. To turn the radio off, push the “PWR VOL” knob.

(b) Selecting a station

Tune in the desired station using one of the following methods. The frequency will appear on the display.

Preset tuning: Use for tuning-in to a desired preset station. (See “(c) Presetting a station”.)

Push the station selector button which has been preset to the desired station. The radio will tune in to the station and the button number will appear on the display.

Seek tuning: Use for automatic station search and stop.

Push the “TUNE (REW FF)” button on either side and hold it until a beep is heard. The radio will begin seeking up or down for a station of the nearest frequency and will stop on reception. Each time you push the button, stations will be sought out one after another.

Scan tuning: Use for station-to-station scanning.

Scanning for all frequencies—Push the “SCAN” button and hold it until a beep is heard. With “SCAN” on the display, the radio will automatically seek out a station of a higher frequency, hold it for 5 seconds and scan to the next. To continue listening to the broadcast of your choice, simply push the “SCAN” button once again.

If the radio scans over all frequencies without stop because the signals are too weak or just because you leave it going, the radio will begin scanning again with sensitivity boosted for searching out weak stations.

Scanning for preset stations—Push the “SCAN” button within 2 seconds. With “SCAN” on the display, the radio will automatically seek out a preset station, hold it for 5 seconds and scan to the next. To continue listening to the station of your choice, simply push the “SCAN” button once again.

Manual tuning

Push the “TUNE (REW FF)” button on either side for less than 0.5 second. Each time you push the button, the radio will step up or down to another frequency where stations could exist.

(c) Presetting a station

1. Tune in the desired station. (See “(b) Selecting a station”.)

2. Push one of the station selector buttons and hold it until a beep is heard. This sets the station to the button and the button number will appear on the display.

Each button can store one AM station and one FM station. To change the preset station to a different one, follow the same procedure.

The preset station will be cancelled when the power source is severed (battery disconnected, burnt fuse, etc.).

(d) Adjusting the tone

To adjust a low-pitched tone, push the "BASS TREB" knob (if pushed in) and turn it.

To adjust a high-pitched tone, push the "BASS TREB" knob (if pushed in), pull it fully out and turn it.

(e) Adjusting the sound balance

To balance the sound between the right and left speakers, pull the "BAL" knob and turn it.

To balance the sound between the front and rear speakers, turn the "FADE" knob.

(f) Listening to the cassette tape

1. Put the cassette into the slot, with the tape side to the right and lightly push it in. The tape player will grab the cassette and slide it into place to play it. If the radio is on when inserting the cassette, the radio will automatically turn off.

If the cassette is already in the slot, push the "TAPE" button.

At this time, "PLAY" will appear on the display.

The tape player can also be turned on by pushing the "PWR VOL" knob if the tape player was playing when the system was turned off by pushing the knob.

2. If using a tape recorded with Dolby® NR*, push the button marked with the double-D symbol. The display will indicate that the Dolby noise reduction system is on.

The Dolby NR mode reduces tape noise by about 10 dB. For best sound reproduction, play your tapes with the Dolby® NR* on or off according to the mode used for recording the tape.

To play a tape recorded without Dolby® NR*, push the button again to turn off the Dolby® NR*.

*: Dolby noise reduction manufactured under license from Dolby Laboratories Licensing Corporation. "DOLBY" and the double-D symbol DD are trademarks of Dolby Laboratories Licensing Corporation.

3. Turn the "PWR VOL" knob to adjust the volume.

4. Select your program. (See "(g) Selecting a program".)

5. Adjust the tone and sound balance. (See "(d) Adjusting the tone" and "(e) Adjusting the sound balance".)

6. To turn the player off, push the "PWR VOL" knob.

7. To eject the cassette, push the EJECT button. As this is done, the player will turn off. If the radio was on when the cassette tape was inserted, it will automatically turn on again.

You can eject the cassette only once after the system is turned off.

(g) Selecting a program

1. Push the "PROG" button to select a side to play. The tape operation indicator display shows you which side is being played.

The player will automatically reverse directions at the end of the tape to play the other side.

2. Push the "REW FF (TUNE)" button on either side to fast forward or rewind the tape. At this time, "FF" or "REW" will appear on the display. To stop the tape while it is fast forwarding, push "FF" or "TAPE"; to stop the tape while it is rewinding, push "REW" or "TAPE". The tape will immediately begin to play.

Air conditioning controls

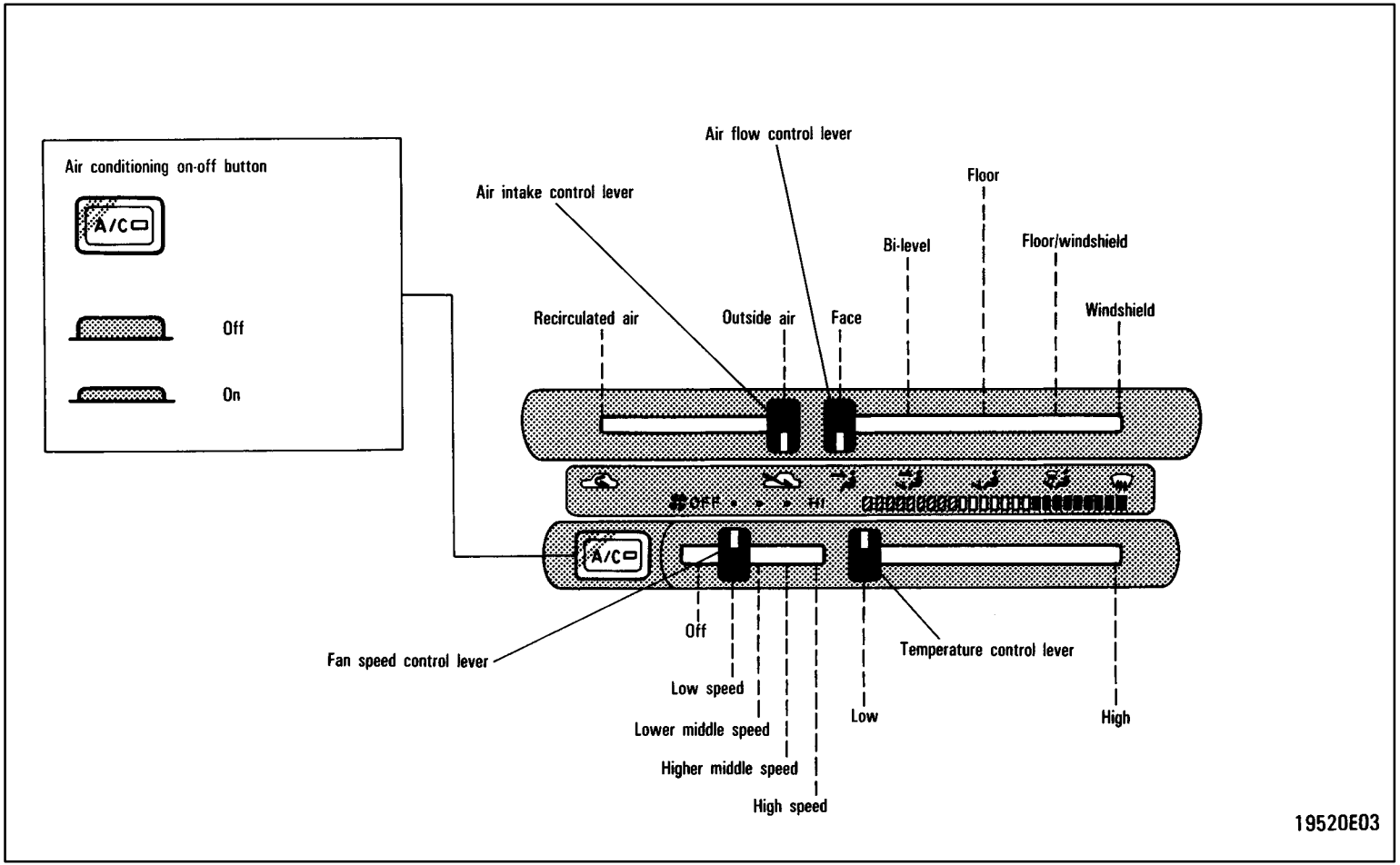

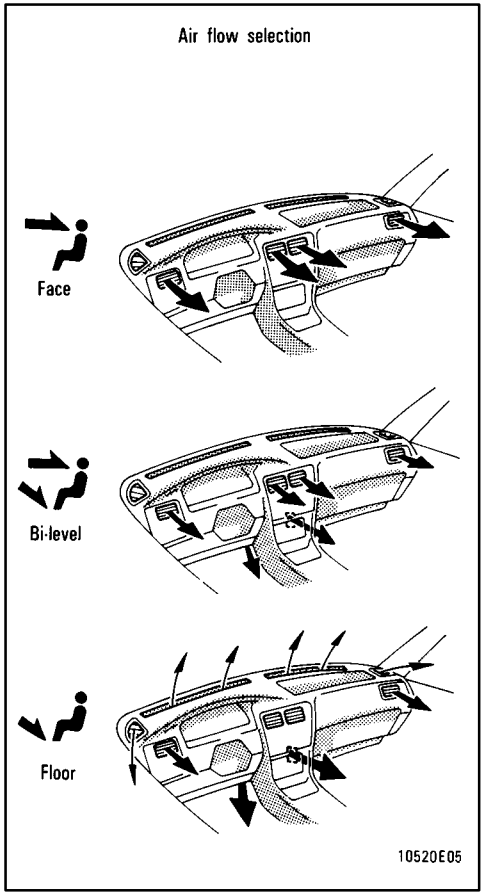

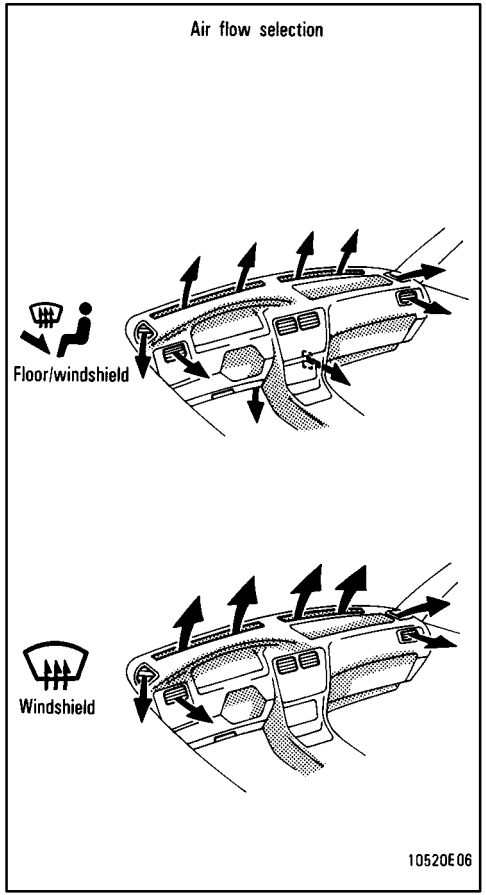

(a) Controls and functions

The temperature control lever is used to adjust the temperature of the delivered air.

Move the lever toward the HIGH position for higher temperature and toward the LOW position for lower temperature.

The air intake control lever is used to select intake air, either outside air or recirculated air.

With the lever in the OUTSIDE AIR position, the system will take fresh outside air into the unit. For recirculated air, move the lever to the RECIRCULATED AIR position.

The air flow control lever is used to select the air flow outlets air is delivered from.

See “(f) Air flow selection” for detailed information.

The fan speed control lever is used to turn on and off the fan and select the fan speed.

The higher the fan speed setting is, the more air is delivered. Moving the lever to the “OFF” position turns off the fan.

The air conditioning on-off button is used to turn on and off the air conditioning.

With the button pressed in, the air conditioning turns on. Pressing the button once again will turn the air conditioning off.

If the indicator light flashes, contact your Toyota dealer as soon as possible. There may be a slippage of the drive belt or trouble in the compressor. If this happens, the air conditioning is automatically turned off to avoid damage to the drive belt.

(b) Heating

1. Place the temperature control lever anywhere except the LOW position.

When dehumidified heating is desired, place the lever between the HIGH and middle positions.

If cooler air is desired at face level for bi-level operation, place the lever around the middle.

2. Move the air intake control lever to the OUTSIDE AIR position.

If quick circulation of heated air is desired, move the lever to the RECIRCULATED AIR position.

For normal use, it is best to keep the lever in the OUTSIDE AIR position. Otherwise the windows will fog up more easily.

3. Move the air flow control lever to the FLOOR position.

If cooler air is desired at face level for bi-level operation, place the lever to the BI-LEVEL position.

If the windshield fogs up easily, move the lever to the FLOOR/WINDSHIELD position.

For detailed information on air flow control including other settings, see “(f) Air flow selection”.

4. Move fan speed control lever anywhere except the “OFF” position.

5. Leave the air conditioning on-off button in the ”OFF” position.

If dehumidifed heating is desired, press in the air conditioning on-off button.

(c) Cooling

1. Place the temperature control lever anywhere between the middle and LOW positions.

If warmer air is desired at floor level for bi-level operation, place the lever around the middle.

2. Move the air intake control lever to the OUTSIDE AIR position.

If quick circulation of cooled air is desired, move the lever to the RECIRCULATED AIR position.

For normal use, it is best to keep the lever in the OUTSIDE AIR position.

3. Move the air flow control lever to the FACE position.

If warmer air is desired at floor level for bi-level operation, place the lever to the BI-LEVEL position.

For detailed information on air flow control including other settings, see “(f) Air flow selection”.

4. Move the fan speed control lever anywhere except the “OFF” position.

5. Press in the air conditioning on-off button.

(d) Ventilation

1. Place the temperature control lever at the LOW position.

2. Move the air intake control lever to the OUTSIDE AIR position.

3. Move the air flow control lever to the FACE position.

For detailed information on air flow control including other settings, see “(f) Air flow selection”.

4. Move the fan speed control lever anywhere except the “OFF” position.

5. Leave the air conditioning on-off button in the “OFF” position.

(e) Windshield defogging and defrosting

To remove interior fog on the windshield:

1. Place the temperature control lever at any position.

2. Move the air intake control lever to the OUTSIDE AIR position.

3. Move the air flow control lever to the WINDSHIELD position.

For detailed information on air flow control, see “(f) Air flow selection”.

4. Move fan speed control lever anywhere except the “OFF” position.

5. Press in the air conditioning on-off button.

To remove frost or exterior fog on the windshield:

1. Place the temperature control lever at the HIGH position.

2. Move the air intake control lever to the OUTSIDE AIR position.

3. Move the air flow control lever to the WINDSHIELD position.

For detailed information on air flow control, see “(f) Air flow selection”.

4. Move fan speed control lever to the “HI” position.

5. Leave the air conditioning on-off button in the OFF position.

(f) Air flow selection

FACE position—This position directs the air flow to face level.

BI-LEVEL—This position directs the air flow to face level and floor. Except in ventilation, the air to the floor is slightly warmer than that to the face level.

FLOOR position—This position directs the air flow mostly to the floor.

FLOOR / WINDSHIELD position — This position directs the air flow to the windshield and front side windows as well as the floor.

WINDSHIELD position—This position directs the air flow mostly to the windshield, front side windows.

Do not use the WINDSHIELD position during cooling operation in extremely humid weather. The difference between the temperature of the outside air and that of the windshield could cause the outer surface of the windshield to fog up blocking your vision.

(g) Operating tips

- Be sure the air inlet grilles in front of the windshield are not blocked by leaves or other obstructions.
- If air flow control is not satisfactory, check the side vents. (See “Side vents” after “Heater controls”.)
- To help cool down the interior after parking in the hot sun, drive for the first few minutes with the windows open. After the excess heat has blown away, close the windows.
- When driving on dusty roads, close all windows. If dust thrown up by the vehicle is still drawn into the vehicle after closing the windows, it is recommended that the air intake control lever be set to the OUTSIDE AIR position and the fan speed control lever anywhere except the “OFF” position.
- If following another vehicle on a dusty road, or driving in windy and dusty conditions, it is recommened that the air intake control lever be temporarily set to the RECIRCULATED AIR position, which will close off the outside passage and prevent outside air and dust from entering the vehicle interior.

Heater controls

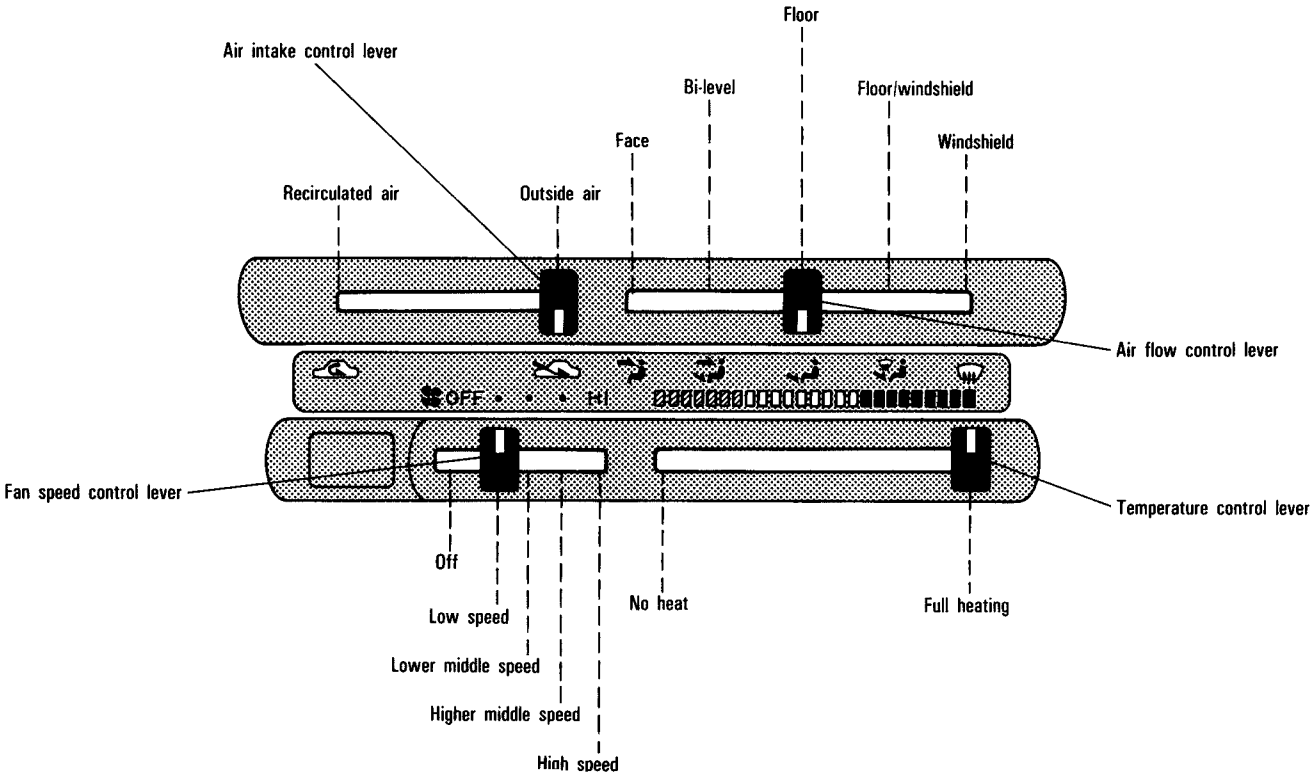

19530E01

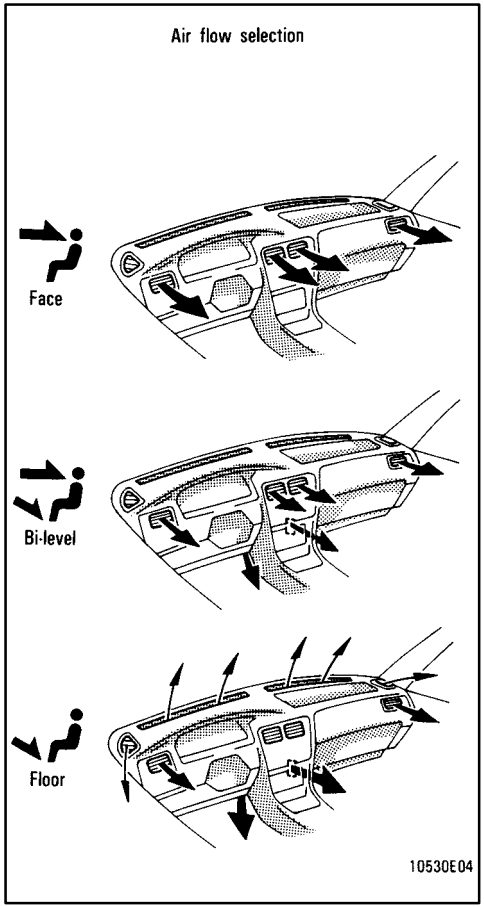

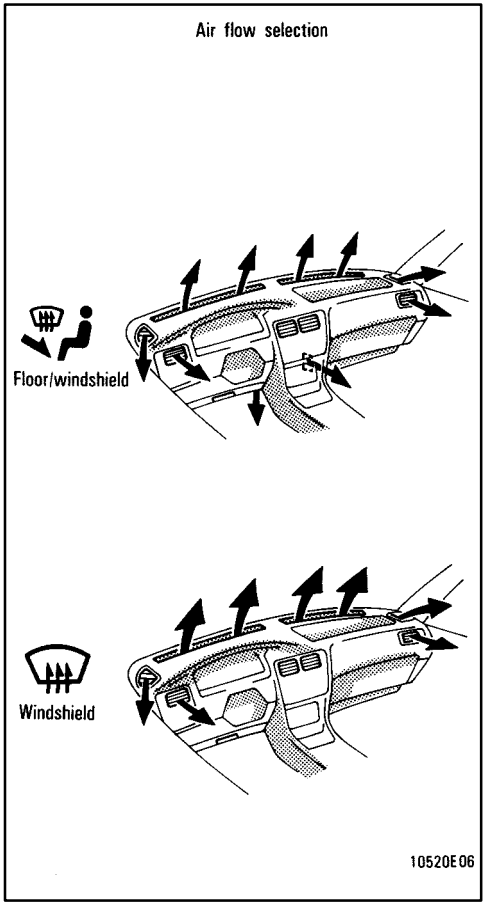

(a) Controls and functions

The temperature control lever is used to turn on and off the heater and adjust the temperature of the heated air.

Move the lever toward the FULL HEATING position for higher temperature. Moving the lever to the NO HEAT position turns off the heater.

The air intake control lever is used to select intake air, either outside air or recirculated air.

With the lever in the OUTSIDE AIR position, the system will take fresh outside air into the unit. For recirculated air, move the lever to the RECIRCULATED AIR position.

The air flow control lever is used to select the air flow outlets air is delivered from.

See “(e) Air flow selection” for detailed information.

The fan speed control lever is used to turn on and off the fan and select the fan speed.

The higher the fan speed setting is, the more air is delivered. Moving the lever to the “OFF” position turns off the fan.

(b) Heating

1. Place the temperature control lever anywhere except the NO HEAT position.

If cooler air is desired at face level for bi-level operation, place the lever around the middle.

2. Move the air intake control lever to the OUTSIDE AIR position.

If quick circulation of heated air is desired, move the lever to the RECIRCULATED AIR position.

For normal use, it is best to keep the lever in the OUTSIDE AIR position. Otherwise the windows will fog up more easily.

3. Move the air flow control lever to the FLOOR position.

If cooler air is desired at face level for bi-level operation, move the lever to the BI-LEVEL position.

If the windshield fogs up easily, move the lever to the FLOOR/WINDSHIELD position.

For detailed information on air flow control including other settings, see “(e) Air flow selection”.

4. Move fan speed control lever anywhere except the “OFF” position.

(c) Ventilation

1. Place the temperature control lever at the NO HEAT position.

2. Move the air intake control lever to the OUTSIDE AIR position.

3. Move the air flow control lever to the FACE position.

For detailed information on air flow control including other settings, see “(e) Air flow selection”.

4. Move fan speed control lever anywhere except the “OFF” position.

(d) Windshield defogging and defrosting

1. Place the temperature control lever at FULL HEATING position.

2. Move the air intake control lever to the OUTSIDE AIR position.

3. Move the air flow control lever to the WINDSHIELD position.

For detailed information on air flow control, see “(e) Air flow selection”.

4. Move fan speed control lever to the “HI” position.

(e) Air flow selection

FACE position—This position directs the air flow to face level.

BI-LEVEL position—This position directs the air flow to face level and floor. Except in ventilation, the air to the floor is slightly warmer than that to face level.

FLOOR position—This position directs the air flow mostly to the floor.

FLOOR / WINDSHIELD position — This position directs the air flow to the windshield and front side windows as well as the floor.

WINDSHIELD position—This position directs the air flow mostly to the windshield, front side windows.

(f) Operating tips

- Be sure the air inlet grilles in front of the windshield are not blocked by leaves or other obstructions.
- If air flow control is not satisfactory, check the side vents. (See “Side vents”.)
- When driving on dusty roads, close all windows. If dust thrown up by the vehicle is still drawn into the vehicle after closing the windows, it is recommended that the air intake control lever be set to the OUTSIDE AIR position and the fan speed control lever anywhere except the “OFF” position.

- If following another vehicle on a dusty road, or driving in windy and dusty conditions, it is recommended that the air intake control lever be temporarily set to the RECIRCULATED AIR position, which will close off the outside passage and prevent outside air and dust from entering the vehicle interior.

Side Vents

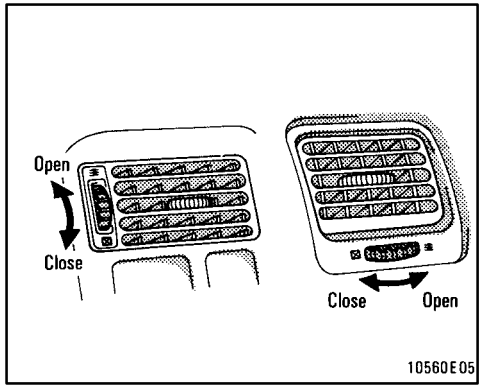

The side vents may be opened or closed as shown.

Part 1

OPERATION OF INSTRUMENTS AND CONTROLS—

Chapter 1-8

Other equipment

- Clock
- Cigarette lighter and ashtray
- Glovebox
- Cup holder
- Luggage cover
- Floor mat

Clock

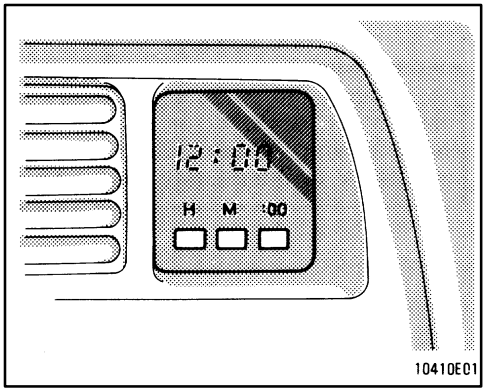

The digital clock indicates the time with the ignition key at the “ACC” or “ON” position. To reset the hour, depress the “H” button. To reset the minutes, depress the “M” button. To adjust the time to full hour, depress the “:00” button.

For example, if the “:00” button is depressed when the time is between 1:01—1:29, the time will change to 1:00. If the time is between 1:30—1:59, the time will change to 2:00.

When the instrument panel lights are turned on, the brightness of the time indication will be reduced.

Once the electrical power source has been disconnected from the clock, the time is automatically set to 1:00 (one o’clock).

Cigarette lighter and ashtray

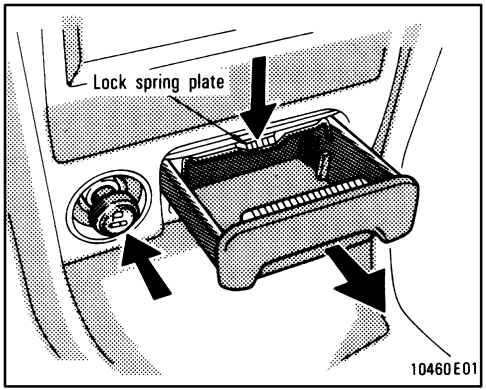

To operate the cigarette lighter, press it in. When it becomes heated, it automatically pops out ready for use.

If the engine is not running, the key must be in the ”ACC” position.

Do not hold the cigarette lighter pressed in.

When finished with your cigarette, thoroughly extinguish it in the ashtray to prevent other cigarette butts from catching fire. After using the ashtray, press it back in completely.

To remove the ashtray, press down on the lock spring plate and pull it out.

Use a Toyota genuine cigarette lighter or equivalent for replacement.

CAUTION

To reduce the chance of injury in case of an accident or sudden stop while driving, always push the ash-tray back in completely after using.

Glovebox

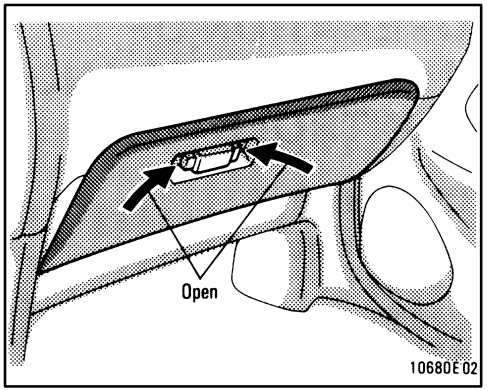

To open the glovebox door, compress the lock release buttons.

CAUTION

To reduce the chance of injury in case of an accident or a sudden stop, always keep the glovebox door closed while driving.

Cup holder

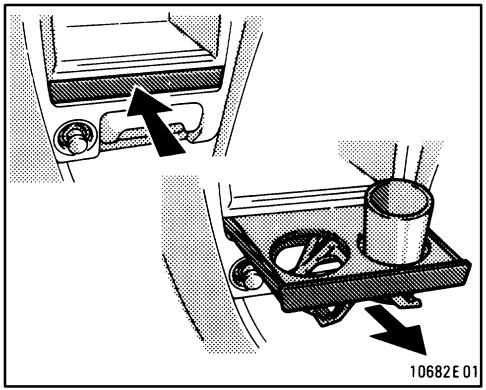

To use the cup holder, push it and pull it out completely.

The cup holder is designed for holding cups or drink—cans fit snugly in its holes.

CAUTION

- **Do not place anything else on the cup holder, as such items may be thrown about and possibly injure people in the vehicle during sud-den braking or an accident.**
- **Keep the cup holder shut when not in use.**

Luggage cover (wagon)

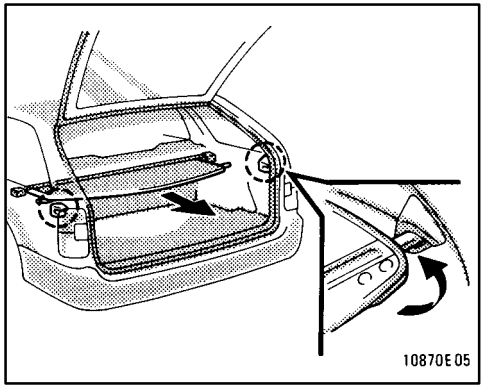

To use the luggage cover, pull it out of the retractor and hook it to the anchors.

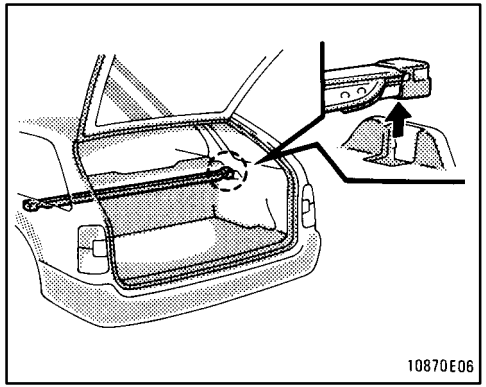

To remove the luggage cover, lift up the luggage cover.

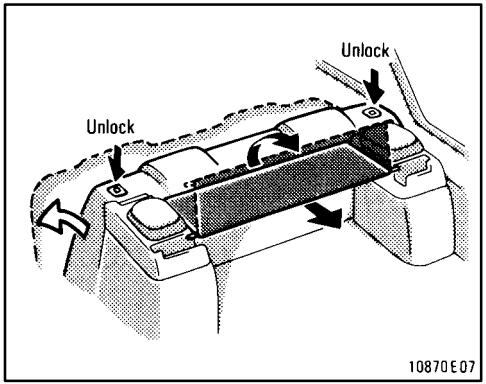

Vehicles with rear speakers—

For more luggage space, remove the luggage cover board.

Unlock the rear seatback and fold it down slightly. Pull up the front of the luggage cover board first, then pull the luggage cover board toward you.

Floor mat

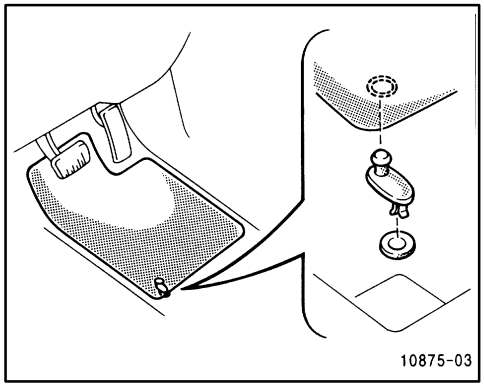

Use a floor mat of the correct size.

If the floor mat has a hole, then it is designed for use with a locking clip. Fix the floor mat and locking clip into the hole in the floor carpet.

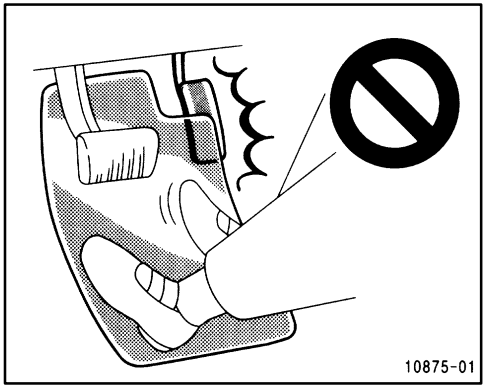

CAUTION

Make sure the floor mat is properly placed on the floor carpet. If the floor mat slips and interferes with the movement of the pedals during driving, it may cause an accident.

Part 2

INFORMATION BEFORE DRIVING YOUR TOYOTA

- Break-in period
- Fuel
- Operation in foreign countries
- Three-way catalytic converter
- Engine exhaust cautions
- Facts about engine oil consumption
- Brake system
- Brake pad wear limit indicators
- Luggage stowage precautions
- Your Toyota's idenitification
- Theft prevention labels
- Suspension and chassis
- Types of tires

Break-in period

Drive gently and avoid high speeds.

Your vehicle does not need an elaborate break-in. But following a few simple tips for the first 1600 km (1000 miles) can add to the future economy and long life of your vehicle:

- Do not drive over 88 km/h (55 mph).
- Avoid overrevving. Maintain engine speed between 2000 and 4000 rpm.
- Avoid full-throttle starts.
- Try to avoid hard stops during the first 300 km (200 miles).
- Do not drive slowly with the manual transmission in a high gear.
- Do not drive for a long time at any single speed, either fast or slow.
- Do not tow a trailer during the first 800 km (500 miles).

Fuel

FUEL TYPE

Your new vehicle must use only unleaded gasoline.

To help prevent gas station mixups, your Toyota has a new smaller fuel tank opening. The special nozzle on pumps with unleaded fuel will fit it, but the larger standard nozzle on pumps with leaded gas will not.

NOTICE

Do not use leaded gasoline. Use of leaded gasoline will cause the three-way catalytic converter to lose its effectiveness and the emission control system to function improperly. Also, this can increase maintenance costs.

OCTANE NUMBER

Select Research Octane Number 91 (Octane Rating 87) or higher.

Use of unleaded fuel with an octane number or rating lower than stated above will cause persistent heavy knocking. If severe, this will lead to engine damage.

If your engine knocks...

If you detect heavy knocking even when using the recommended fuel, or if you hear steady knocking while holding a steady speed on level roads, consult your Toyota dealer.

However, now and then, you may notice light knocking for a short time while accelerating or driving up hills. This is no cause for concern.

GASOLINES CONTAINING DETERGENT ADDITIVES

Toyota recommends use of gasolines that contain detergent additives to avoid build-up of engine deposits.

For further details, ask your Toyota dealer or a local gasoline retailer.

GASOLINES CONTAINING MTBE

Gasolines that contain MTBE (Methyl Tertiary-Butyl Ether) are available in the market. If you use a gasoline mixed with MTBE, make certain that it does not contain more than 15% of MTBE.

If the use of gasolines containing MTBE causes poor driveability and/or poor fuel economy, you should discontinue the use of fuels containing MTBE.

GASOLINES CONTAINING ALCOHOL

If you use gasohol in your Toyota, be sure that it is unleaded, has an octane rating no lower than 87 and does not contain more than 10% ethanol.

Gasohol is a mixture of gasoline and ethanol.

Toyota does not recommend the use of gasolines containing methanol. If you use gasoline containing methanol, use only gasoline meeting the requirements above and also containing less than 5% methanol with cosolvents and corrosion inhibitors for methanol.

NOTICE

- ***Do not use gasohol other than stated above. It will cause fuel system damage or vehicle performance problems.***
- ***If driveability problems are encountered (poor hot starting, vaporizing, engine knock, etc), discontinue the use.***
- ***Take care not to spill gasohol during refueling. Gasohol may cause paint damage.***

FUEL TANK CAPACITY

50 L (13.2 gal., 11.0 imp. gal.)

Operation in foreign countries

If you plan to drive your Toyota in another country...

First, comply with the vehicle registration laws.

Second, confirm the availability of the correct fuel (unleaded and minimum octane number).

Three-way catalytic converter

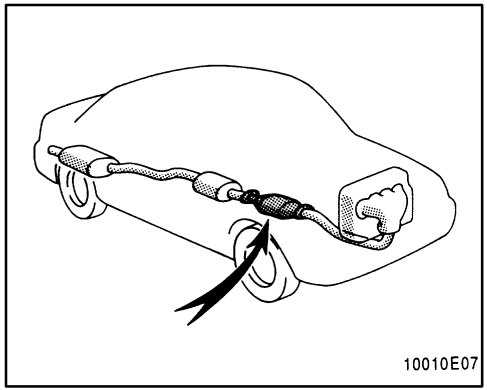

The three-way catalytic converter is an emission control device installed in the exhaust system.

The purpose is to reduce pollutants in the exhaust gas.

CAUTION

- **Keep people and combustible materials away from the exhaust pipe while the engine is running. The exhaust gas is very hot.**
- **Do not drive, idle or park your vehicle over anything that might burn easily such as grass, leaves, paper or rags.**

NOTICE

A large amount of unburned gases flowing into the three-way catalytic converter may cause it to overheat and create a fire hazard. To prevent this and other damage, observe the following precautions:

- ***Use only unleaded gasoline.***
- ***Do not drive with an extremely low fuel level; running out of fuel could cause the engine to misfire, creating an excessive load on the three-way catalytic converter.***
- ***Do not allow the engine to run at idle speed for more than 20 minutes.***
- ***Avoid racing the engine.***
- ***Do not push-start or pull-start your vehicle.***
- ***Do not turn off the ignition while the vehicle is moving.***
- ***Keep your engine in good running order. Malfunctions in the engine electrical system, electronic ignition system/distributor ignition system or fuel system could cause an extremely high three-way catalytic converter temperature.***
- ***If the engine becomes difficult to start or stalls frequently, take your vehicle in for a check-up as soon as possible. Remember, your Toyota dealer knows your vehicle and its three-way catalytic converter system best.***
- ***To ensure that the three-way catalytic converter and the engine emission control system operate properly, your vehicle must receive the periodic inspections required by the Toyota Maintenance Schedule. For scheduled maintenance information, refer to the separate "Owner's Manual Supplement/Maintenance Schedule".***

Engine exhaust cautions

CAUTION

- **Avoid inhaling the engine exhaust. It contains carbon monoxide, which is a colorless and odorless gas. It can cause unconsciousness or even death.**
- **Make sure the exhaust system has no holes or loose connections. The system should be checked from time to time. If you hit something, or notice a change in the sound of the exhaust, have the system checked immediately.**
- **Do not run the engine in a garage or enclosed area except for the time needed to drive the vehicle in or out. The exhaust gases cannot escape, making this a particularly dangerous situation.**
- **Do not remain for a long time in a parked vehicle with the engine running. If it is unavoidable, however, do so only in an unconfined area and adjust the heating or cooling system to force outside air into the vehicle.**
- **Keep the trunk lid or back door closed while driving. An open or unsealed trunk lid or back door may cause exhaust gases to be drawn into the vehicle. If you must drive with the trunk lid or back door open to accommodate a large object, close the windows, open all the instrument panel vents and have the heating or cooling system deliver fresh air into the vehicle by turning the fan to high speed with the air intake control lever set at the OUTSIDE AIR position.**
- **To allow proper operation of your vehicle's ventilation system, keep the inlet grilles in front of the windshield clear of snow, leaves, or other obstructions.**
- **If you smell exhaust fumes in the vehicle, drive with the windows open and the trunk lid or back door closed. Have the cause immediately located and corrected.**

Facts about engine oil consumption

FUNCTIONS OF ENGINE OIL

Engine oil has the primary functions of lubricating and cooling the inside of the engine, and plays a major role in maintaining the engine in proper working order.

ENGINE OIL CONSUMPTION

It is normal that an engine should consume some engine oil during normal engine operation. The causes of oil consumption in a normal engine are as follows.

- Oil is used to lubricate pistons, piston rings and cylinders. A thin film of oil is left on the cylinder wall when a piston moves downwards in the cylinder. High negative pressure generated when the vehicle is decelerating sucks some of this oil into the combustion chamber. This oil as well as some part of the oil film left on the cylinder wall is burned by the high temperature combustion gases during the combustion process.
- Oil is also used to lubricate the stems of the intake valves. Some of this oil is sucked into the combustion chamber together with the intake air and is burned along with the fuel. High temperature exhaust gases also burn the oil used to lubricate the exhaust valve stems.

The amount of engine oil consumed depends on the viscosity of the oil, the quality of the oil and the conditions the vehicle is driven under.

More oil is consumed by high-speed driving and frequent acceleration and deceleration.

A new engine consumes more oil, since its pistons, piston rings and cylinder walls have not become conditioned.

When judging the amount of oil consumption, note that the oil may become diluted and make it difficult to judge the true level accurately.

As an example, if a vehicle is used for repeated short trips, and consumes a normal amount of oil, the dipstick may not show any drop in the oil level at all, even after 1000 km (600 miles) or more. This is because the oil is gradually becoming diluted with fuel or moisture, making it appear that the oil level has not changed.

The diluting ingredients evaporate out when the vehicle is then driven at high speeds, as on an expressway, making it appear that oil is excessively consumed after driving at high speeds.

IMPORTANCE OF ENGINE OIL LEVEL CHECK

One of the most important points in proper vehicle maintenance is to keep the engine oil at the optimum level so that oil function will not be impaired. Therefore, it is essential that the oil level be checked regularly. Toyota recommends that the oil level be checked every time you refuel the vehicle.

NOTICE

Failure to check the oil level regularly could lead to serious engine trouble due to insufficient oil.

For detailed information on oil level check, see “Checking the engine oil level” in Chapter 7-2.

Brake system

TANDEM MASTER CYLINDER BRAKE SYSTEM

The tandem master cylinder brake system is a hydraulic system with two separate sub-systems. If either sub-system should fail, the other will still work. However, the pedal will be harder to press, and your stopping distance will be longer. Also, the brake system warning light may come on.

CAUTION

Do not drive your vehicle with only a single brake system. Have your brakes fixed immediately.

BRAKE BOOSTER

The brake booster uses engine vacuum to power-assist the brakes. If the engine should quit while you are driving, you can bring the vehicle to a stop with normal pedal pressure. There is enough reserve vacuum for one or two stops—but no more!

CAUTION

- **Do not pump the brake pedal if the engine stalls. Each push on the pedal uses up your vacuum reserve.**

- **Even if the power assist is completely lost, the brakes will still work. But you will have to push the pedal hard—much harder than normal. And your braking distance will be longer.**

ANTI-LOCK BRAKE SYSTEM (vehicles with "ABS" warning light)

The anti-lock brake system is designed to prevent lock-up of the wheels during sudden braking or braking on slippery road surfaces. This assists the driver in controlling the vehicle under these circumstances.

The anti-lock brake system becomes operative after the vehicle has accelerated to a speed in excess of approximately 10 km/h (6 mph). It stops operating when the vehicle decelerates to a speed below approximately 5 km/h (3 mph).

You may hear a sound in the engine compartment for a few seconds when the engine is started or just after the vehicle is started. This means that the anti-lock brake system is in the self check mode, and does not indicate a malfunction.

When the anti-lock brake system function is in action, you may feel the brake pedal pulsating and hear a noise. In this situation, to let the anti-lock brake system work for you, just hold the brake pedal down more firmly. Do not pump the brake.

The brake pedal pulsation caused by the anti-lock brake system may indicate hazardous road surface conditions. Although the anti-lock brake system assists in providing vehicle control, it is still important to drive with all due care, because the anti-lock brake system cannot overcome the laws of physics that act on your vehicle:

- Braking capability is dependent on tire friction with the road surface.
- Even though the anti-lock brake system is operating, a driver cannot maintain full control on certain slippery road surfaces, when cornering at high speeds, or in violent maneuvers.
- Avoid high speeds on wet roads. The anti-lock brake system cannot eliminate the risk of hydroplaning and loss of tire friction.

Always maintain a safe distance from the vehicle in front of you. Compared with vehicles not fitted with an anti-lock brake system, your vehicle may require a longer stopping distance in the following cases:

- Driving on rough, gravel or snow-covered roads.
- Driving with tire chains installed.
- Driving on roads where the road surface is pitted or has other differences in surface height.

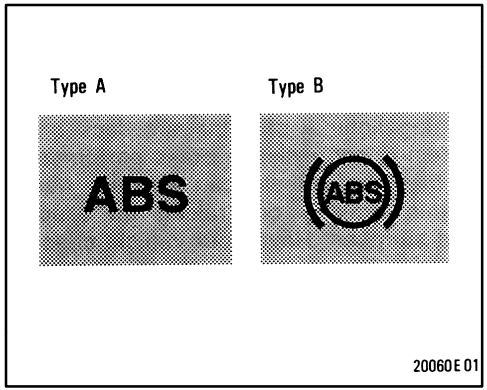

“ABS” warning light

This light comes on when the ignition key is turned to the “ON” position. After about 3 seconds, the light will go off.

If either of the following conditions occurs, this indicates a malfunction somewhere in the parts monitored by the warning light system. Contact your Toyota dealer as soon as possible to service the vehicle.

- The light does not come on as described above, or remains on.
- The light comes on while driving.

Even if the anti-lock brake system should fail, the brake system will still operate conventionally. Have your vehicle checked by your Toyota dealer as soon as possible.

Brake pad wear limit indicators

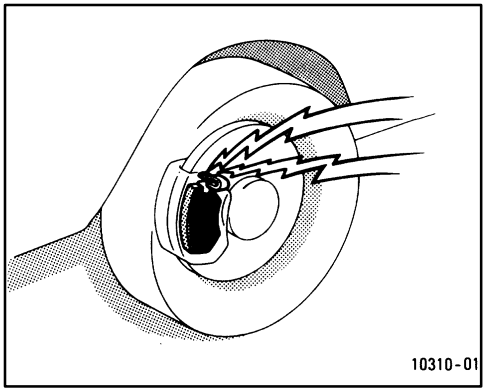

The brake pad wear limit indicators on your disc brakes give a warning noise when the brake pads are worn to where replacement is required.

If you hear a squealing or scraping noise while driving, have the brake pads checked and replaced by your Toyota dealer as soon as possible. Expensive rotor damage can result if the pads are not replaced when necessary.

Luggage stowage precautions

When stowing luggage or cargo in the vehicle, observe the following:

- Put luggage or cargo in the trunk or luggage compartment when at all possible. Be sure all items are secured in place.
- Be careful to keep the vehicle balanced. Locating the weight as far forward as possible helps maintain balance.
- For better fuel economy, do not carry unneeded weight.

CAUTION

- **To prevent luggage or packages from sliding forward during braking, do not stack anything in the enlarged trunk room or the luggage compartment higher than the seatbacks. Keep luggage or packages low, as close to the floor as possible.**
- **Never allow anyone to ride in the enlarged trunk room or the luggage compartment. It is not designed for passengers. They should ride in their seats with their seat belts properly fastened. Otherwise, they are much more likely to suffer serious bodily injury, in the event of sudden braking or a collision.**
- **Do not place anything on the filler panel behind the rear seatback or luggage cover. Such items may be thrown about and possibly injure people in the vehicle during sudden braking or an accident.**
- **Do not drive with objects left on top of the instrument panel. They may interfere with the driver's field of view. Or they may move during sharp vehicle acceleration or turning, and impair the driver's control of the vehicle. In an accident they may injure the vehicle occupants.**

NOTICE

Do not load the vehicle beyond the vehicle capacity weight specified in Part 8.

Your Toyota's identification

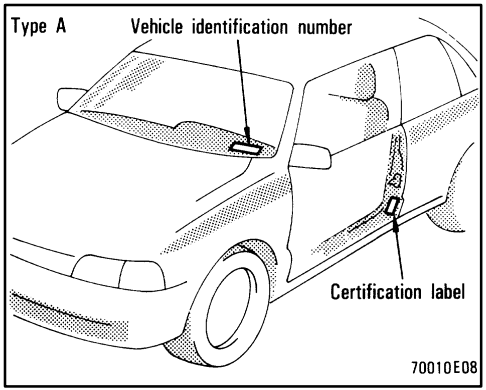

The vehicle identification number (VIN) is the legal identifier for your vehicle. Its location is shown in the illustration.

The vehicle indentification number (VIN) is also on the Certification Label or on the manufacturer's plate.

This is the primary identification number for your Toyota. It is used in registering the ownership of your vehicle.

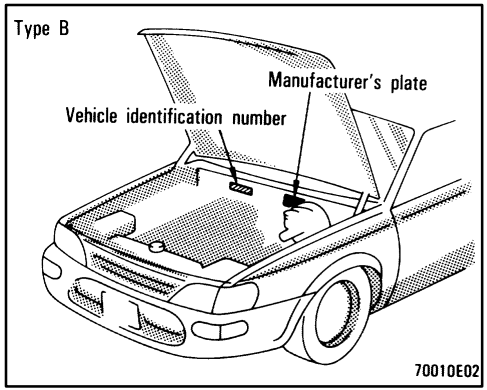

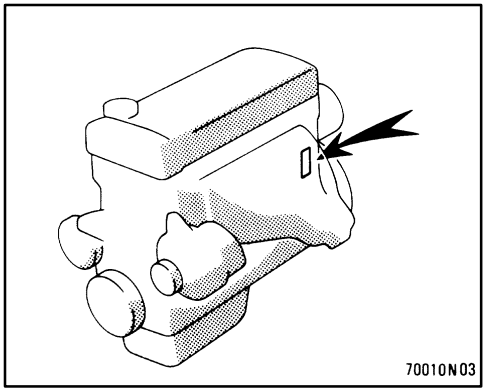

The engine number is stamped on the engine block as shown.

Theft prevention labels (except for Canada)

Your new vehicle carries theft prevention labels which are approximately 56 mm (2.20 inches) by 16 mm (0.63 inch).

The purpose of these labels is to reduce the incidence of vehicle thefts by facilitating the tracing and recovery of parts from stolen vehicles. The label is designed so that once it is applied to a surface, any attempt to remove it will result in destroying the integrity of the label. Transferring these labels intact from one part to another, will be impossible.

NOTICE

You should not attempt to remove the theft prevention labels as it may violate certain state or federal laws.

Suspension and chassis

CAUTION

Do not modify the suspension/chassis with lift kits, spacers, etc. It can cause dangerous handling characteristics, resulting in the loss of control.

Types of tires

Determine what kind of tires your vehicle is originally equipped with.

1. Summer tires

Summer tires are high-speed capability tires best suited to highway driving under dry conditions.

Since summer tires do not have the same traction performance as snow tires, summer tires are inadequate for driving on snow-covered or icy roads. For driving on snow-covered or icy roads, we recommend using snow tires. If installing snow tires, be sure to replace all four tires.

2. All season tires

All season tires are designed to provide better traction in snow and to be adequate for driving in most winter conditions, as well as for use all year round.

All season tires, however, do not have adequate traction performance compared with snow tires in heavy or loose snow. Also, all season tires fall short in acceleration and handling performance compared with summer tires in highway driving.

CAUTION

- **Do not mix summer and all season tires on your vehicle as this can cause dangerous handling characteristics, resulting in loss of control.**
- **Do not use tire other than the manufacturer's designated tires, and do not mix tires or wheels of the sizes different from the originals.**

Part 3

STARTING AND DRIVING

- Before starting the engine
- How to start the engine
- Tips for driving in various conditions
- Winter driving tips
- Trailer towing
- How to save fuel and make your vehicle last longer, too

Before starting the engine

1. Check the area around the vehicle before entering it.
2. Adjust seat position, seatback angle, head restraint height and steering wheel angle.
3. Adjust inside and outside rear view mirrors.
4. Lock all doors.
5. Fasten seat belts.

How to start the engine—

(a) Before cranking

1. Apply the parking brake firmly.
2. Turn off unnecessary lights and accessories.
3. **Manual transmission:** Press the clutch pedal to the floor and shift the transmission into neutral. Hold the clutch pedal to the floor until the engine is started. A starter safety device will prevent the starter from operating if the clutch pedal is not fully depressed.

   Automatic transmission: Put the selector lever in “P”. If you need to restart the engine while the vehicle is moving, put the selector lever in “N”. A starter safety device will prevent the starter from operating if the selector lever is in any drive position.
4. **Automatic transmission only:** Depress the brake pedal and hold it to the floor until driving off.

(b) Starting the engine

Before starting the engine, be sure to follow the instructions in “(a) Before cranking”.

Normal starting procedure

The multiport fuel injection system/sequential multiport fuel injection system in your engine automatically controls the proper air-fuel mixture for starting. You can start a cold or hot engine as follows:

1. With your foot off the accelerator pedal, crank the engine by turning the key to “START”. Release it when the engine starts.
2. After the engine runs for about 10 seconds, you are ready to drive.

If the weather is below freezing, let the engine warm up for a few minutes before driving.

If the engine stalls...

Simply restart it, using the correct procedure given in normal starting.

If the engine will not start—

See “If your vehicle will not start” in Part 4.

NOTICE

- ***Do not crank for more than 15 seconds at a time. This may overheat the starter and wiring systems.***
- ***Do not race a cold engine.***
- ***If the engine becomes difficult to start or stalls frequently, have the engine checked immediately.***

Tips for driving in various conditions

- Always slow down in gusty crosswinds. This will allow you much better control
- Drive slowly onto curbs and, if possible, at a right angle. Avoid driving onto high, sharp-edged objects and other road hazards. Failure to do so can lead to severe tire damage resulting in tire bursts.
- When parking on a hill, turn the front wheels until they touch the curb so that the vehicle will not roll. Apply the parking brake, and place the transmission in “P” (automatic) or in first or reverse (manual). If necessary, block the wheels.
- Washing your vehicle or driving through deep water may get the brakes wet. To see whether they are wet, check that there is no traffic near you, and then press the pedal lightly. If you do not feel a normal braking force, the brakes are probably wet. To dry them, drive the vehicle cautiously while lightly pressing the brake pedal with the parking brake pulled. If they still do not work safely, pull to the side of the road and call a Toyota dealer for assistance.

CAUTION

- **Before driving off, make sure the parking brake is fully released and the parking brake reminder light is off.**
- **Do not leave your vehicle unattended while the engine is running.**
- **Do not rest your foot on the brake pedal while driving. It can cause dangerous overheating, needless wear, and poor fuel economy.**
- **To drive down a long or steep hill, reduce your speed and downshift. Remember, if you ride the brakes excessively, they may overheat and not work properly.**
- **Be careful when accelerating, upshifting, downshifting or braking on a slippery surface. Sudden acceleration or engine braking could cause the vehicle to spin or skid.**

- **Do not drive in excess of the speed limit. Even if the legal speed limit permits it, do not drive over 140 km/h (85 mph) unless your vehicle has high-speed capability tires. Driving over 140 km/h (85 mph) may result in tire failure, loss of control and possible injury. Be sure to consult a tire dealer to determine whether the tires on your vehicle are high-speed capability tires or not before driving at such speeds.**
- **Do not continue normal driving when the brakes are wet. If they are wet, your vehicle will require a longer stopping distance, and it may pull to one side when the brakes are applied. Also, the parking brake will not hold the vehicle securely.**

Winter driving tips

Make sure you have ethylene-glycol antifreeze in the radiator.

NOTICE

Do not use alcohol type antifreeze.

Check the condition of the battery and cables.

Cold temperatures reduce the capacity of any battery, so it must be in top shape to provide enough power for winter starting. Chapter 7-3 tells you how to visually inspect the battery. Your Toyota dealer and most service stations will be pleased to check the level of charge.

Make sure the engine oil viscosity is suitable for the cold weather.

See Chapter 7-2 for recommended viscosity. Leaving a heavy summer oil in your vehicle during winter months may cause harder starting. If you are not sure about which oil to use, call your Toyota dealer—he will be pleased to help.

Keep the door locks from freezing.

Squirt lock de-icer or glycerine into the locks to keep them from freezing. To open a frozen lock, try heating the key before inserting it.

Use a washer fluid containing an antifreeze solution.

This product is available at your Toyota dealer and most auto parts stores. Follow the manufacturer's directions for how much to mix with water.

NOTICE

Do not use engine antifreeze or any other substitute as washer fluid because it may damage your vehicle's paint.

Do not use your parking brake when there is a possibility it could freeze.

When parking, put the transmission into "P" (automatic) or into first or reverse (manual) and block the rear wheels. Do not use the parking brake, or snow or water accumulated in and around the parking brake mechanism may freeze, making it hard to release.

Keep ice and snow from accumulating under the fenders.

Ice and snow built up under your fenders can make steering difficult. During bad winter driving, stop and check under the fenders occasionally.

Depending on where you are driving, we recommend you carry some emergency equipment.

Some of the things you might put in the vehicle are tire chains, window scraper, bag of sand or salt, flares, small shovel, jumper cables, etc.

Trailer towing

Your vehicle is designed primarily as a passenger-carrying vehicle. Towing a trailer will have an adverse effect on handling, performance, braking, durability and driving economy (fuel consumption, etc.). Your safety and satisfaction depend on the proper use of correct equipment and cautious driving habits. For your safety and the safety of others, you must not overload your vehicle or trailer. Toyota warranties do not apply to damage or malfunction caused by towing a trailer for commercial purposes. Ask your local Toyota dealer for further details before towing.

WEIGHT LIMITS

Before towing, make sure the total trailer weight, gross vehicle weight, gross axle weight and trailer tongue load are all within the limits.

The total trailer weight and tongue load can be measured with platform scales found at a highway weighing station, building supply company, trucking company, junk yard, etc.

CAUTION

- **The total trailer weight (trailer weight plus its cargo load) must not exceed 680 kg (1500 lb.). Exceeding this weight is dangerous.**

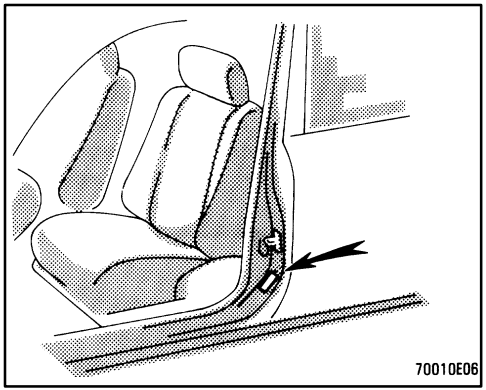

CAUTION

- **The gross vehicle weight must not exceed the Gross Vehicle Weight Rating (GVWR) indicated on the Certification Label. The gross vehicle weight is the sum of weights of the unloaded vehicle, driver, passengers, luggage, hitch and trailer tongue load. It also includes the weight of any special equipment installed on your vehicle.**
- **The load on either the front or rear axle resulting from distribution of the gross vehicle weight on both axles must not exceed the Gross Axle Weight Rating (GAWR) listed on the Certification Label.**

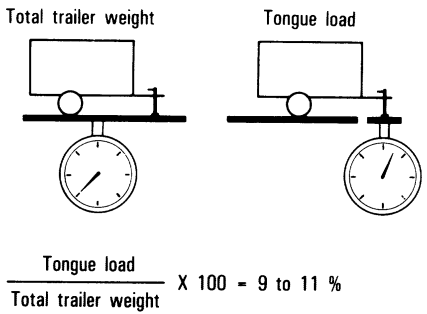

- **The trailer cargo load should be distributed so that the tongue load is 9 to 11% of the total trailer weight, not exceeding 68 kg (150 lb.). Never load the trailer with more weight in the back than in the front. About 60% of the trailer load should be in the front half of the trailer and the remaining 40% in the rear.**

HITCHES

- Use only a hitch which is recommended by the hitch manufacturer and conforms to the total trailer weight requirement.
- Follow the directions supplied by the hitch manufacturer, and bolt the hitch securely to the rear bumper. Lubricate the hitch ball with a light coat of grease.
- Toyota recommends removing the trailer hitch whenever you are not towing a trailer to reduce the possibility of additional damage caused by the hitch if your vehicle is struck from behind. After removing the hitch, seal any mounting holes in the vehicle body to prevent entry of pollutants such as exhaust fumes, dirt, water, etc.

NOTICE

Do not use axle-mounted hitches as they can cause damage to the axle housing, wheel bearings, wheels or tires. Also, never install a hitch which may interfere with the normal function of an Energy Absorbing Bumper, if so equipped.

BRAKES AND SAFETY CHAINS

- **Toyota recommends trailers with brakes that conform to any applicable federal and state/provincial regulations.**
- **A safety chain must always be used between the towing vehicle and the trailer. Leave sufficient slack in the chain for turns. The chain should cross under the trailer tongue to prevent the tongue from dropping to the ground in case it becomes damaged or separated. For correct safety chain procedures, follow the hitch or trailer manufacturer's recommendations.**

CAUTION

- **If the total trailer weight exceeds 453 kg (1000 lb.), trailer brakes are required.**
- **Never tap into your vehicle's hydraulic system as it would lower its braking effectiveness.**
- **Never tow a trailer without using a safety chain securely attached to both the trailer and the vehicle. If damage occurs to the coupling unit or hitch ball, there is danger of the trailer wandering over into another lane.**

TIRES

- Ensure that your vehicle's tires are properly inflated. See Chapter 7-2 for instructions.
- The trailer tires should be inflated to the pressure recommended by the trailer manufacturer in respect to the total trailer weight.

TRAILER LIGHTS

- Trailer lights must comply with federal, state/provincial and local regulations. See your local recreational vehicle dealer or rental agency for the correct type of wiring and relays for your trailer. Check for correct operation of the turn signals and stop lights each time you hitch up. Direct splicing may damage your vehicle's electrical system and cause a malfunction of your lights.

BREAK-IN SCHEDULE

- Toyota recommends that you do not tow a trailer with a new vehicle or a vehicle with any new power train component (engine, transmission, differential, wheel bearing, etc.) for the first 800 km (500 miles) of driving.

MAINTENANCE

- If you tow a trailer, your vehicle will require more frequent maintenance due to the additional load. For this information, please refer to the scheduled maintenance information in the "Owner's Manual Supplement/Maintenance Schedule".
- Retighten all fixing bolts of the towing ball and bracket after approximately 1000 km (600 miles) of trailer driving.

PRE-T OWING SAFETY CHECK

- Check that your vehicle remains level when a loaded or unloaded trailer is hitched. Do not drive if the vehicle has an abnormal nose-up or nose-down condition, and check for improper tongue load, overload, worn suspension or other possible causes.
- Make sure the trailer cargo is securely loaded so that it cannot shift.
- Check that your rear view mirrors conform to any applicable federal, state/provincial or local regulation. If not, install the rear view mirrors required for towing purpose.

TRAILER TOWING TIPS

When towing a trailer, your vehicle will handle differently than when not towing. The three main causes of vehicle-trailer accidents are driver error, excessive speed and improper trailer loading. Keep these in mind when towing:

- Before starting out, check operation of the lights and all vehicle-trailer connections. After driving a short distance, stop and recheck the lights and connections. Before actually towing a trailer, practice turning, stopping and backing with a trailer in an area away from traffic until you learn the feel.
- Backing with a trailer is difficult and requires practice. Grip the bottom of the steering wheel and move your hand to the left to move the trailer to the left. Move your hand to the right to move the trailer to the right. (This procedure is generally opposite to that when backing without a trailer). Also, just turn the steering wheel a little at a time, avoiding sharp or prolonged turning. Have someone guide you when backing to reduce the risk of an accident.

- Because stopping distance may be increased, vehicle-to-vehicle distance should be increased when towing a trailer. For each 16 km/h (10 mph) of speed, allow at least one vehicle and trailer length between you and the vehicle ahead. Avoid sudden braking as you may skid, resulting in jackknifing and loss of control. This is especially true on wet or slippery surfaces.
- Avoid jerky starts or sudden acceleration. If your vehicle has manual transmission, prevent excessive clutch slippage by keeping engine rpm low and not racing the engine. Always start out in first gear.
- Avoid jerky steering and sharp turns. The trailer could hit your vehicle in a tight turn. Slow down before making a turn to avoid the necessity of sudden braking.
- Remember that when making a turn, the trailer wheels will be closer than the vehicle wheels to the inside of the turn. Therefore, compensate for this by making a larger than normal turning radius with your vehicle.
- Crosswinds and rough roads will adversely affect handling of your vehicle and trailer, causing sway. Pay attention to the rear from time to time to prepare yourself for being passed by large trucks or buses, which may cause your vehicle and trailer to sway. If swaying happens, firmly grip the steering wheel and reduce speed immediately but gradually. Never increase speed. Steer straight ahead. If you make no extreme correction with the steering or brakes, the vehicle and trailer will stabilize.
- Be careful when passing other vehicles. Passing requires considerable distance. After passing a vehicle, do not forget the length of your trailer and be sure you have plenty of room before changing lanes.
- In order to maintain engine braking efficiency, do not use fifth gear (manual transmission or overdrive (automatic transmission).
- Because of the added load of the trailer, your vehicle's engine may overheat on hot days (at temperatures over 30°C [85°F]) when going up a long or steep grade with a trailer. If the engine coolant temperatue gauge indicates overheating, immediately turn off the air conditioning (if in use), pull off the road and stop in a safe spot. Refer to "If your vehicle overheats" in Part 4 of this manual.
- Always place wheel blocks under both the vehicle and trailer wheels when parking. Apply the parking brake firmly. Put the transmission in "P" (automatic) or in first or reverse (manual). Avoid parking on a slope with a trailer, but if it cannot be avoided, do so only after performing the following:

1. Apply the brakes and hold.
2. Have someone place wheel blocks under both the vehicle and trailer wheels.
3. When the wheel blocks are in place, release your brakes slowly until the blocks absorb the load.
4. Apply the parking brake firmly.
5. Shift into first or reverse (manual) or "P" (automatic) and turn off the engine.

When restarting out after parking on a slope:

1. With the transmission in “P” position (automatic) or the clutch pedal depressed (manual), start the engine. (With an automatic transmission, be sure to keep the brake pedal depressed.)
2. Shift into gear.
3. Release the parking brake (also foot brake on automatic transmission vehicles) and slowly pull or back away from the wheels blocks. Stop and apply your brakes.
4. Have someone retrieve the blocks.

CAUTION

- **Do not exceed 72 km/h (45 mph) or the posted towing speed limit, whichever is lower. Because instability (swaying) of a towing vehicle-trailer combination usually increases as the speed increases, exceeding 72 km/h (45 mph) may cause loss of control.**
- **Slow down and downshift before descending steep or long downhill grades. Do not make sudden downshifts.**
- **Avoid holding the brake pedal down too long or too frequently. This could cause the brakes to overheat and result in reduced braking efficiency.**

How to save fuel and make your vehicle last longer, too

Getting more kilometers/mileage from a liter/gallon of fuel is easy—just take it easy. It will help make your vehicle last longer, too. Here are some specific tips on how to save money on both fuel and repairs:

- **Keep your tires inflated at the correct pressure.** Underinflation causes tire wear and wastes fuel. See Chapter 7-2 for instructions.
- **Do not carry unneeded weight in your vehicle.** Excess weight puts a heavier load on the engine, causing greater fuel consumption.
- **Avoid lengthy warm-up idling.** Once the engine is running smoothly, begin driving—but gently. Remember, however, that on cold winter days this may take a little longer.
- **Accelerate slowly and smoothly.** Avoid jackrabbit starts. Get into high gear as quickly as possible.
- **Avoid long engine idling.** If you have a long wait and you are not in traffic, it is better to turn off the engine and start again later.
- **Avoid engine lug or overrevving.** Use a gear position suitable for the road on which you are travelling.
- **Avoid continuous speeding up and slowing down.** Stop-and-go driving wastes fuel.
- **Avoid unnecessary stopping and braking.** Maintain a steady pace. Try to time the traffic signals so you only need to stop as little as possible or take advantage of through streets to avoid traffic lights. Keep a proper distance from other vehicles to avoid sudden braking. This will also reduce wear on your brakes.
- **Avoid heavy traffic or traffic jams whenever possible.**
- **Do not rest your foot on the clutch or brake pedal.** This causes needless wear, overheating and poor fuel economy.
- **Maintain a moderate speed on highways.** The faster you drive, the greater the fuel consumption. By reducing your speed, you will cut down on fuel consumption.
- **Keep the front wheels in proper alignment.** Avoid hitting the curb and slow down on rough roads. Improper alignment not only causes faster tire wear but also puts an extra load on the engine, which, in turn, wastes fuel.

- **Keep the bottom of your vehicle free from mud, etc.** This not only lessens weight but also helps prevent corrosion.
- **Keep your vehicle tuned-up and in top shape.** A dirty air cleaner, carburetor out of adjustment, improper valve clearance, dirty plugs, dirty oil and grease, brakes not adjusted, etc. all lower engine performance and contribute to poor fuel economy. For longer life of all parts and lower operating costs, keep all maintenance work on schedule, and if you often drive under severe conditions, see that your vehicle receives more frequent maintenance. (For scheduled maintenance information, please refer to the separate “Owner’s Manual Supplement/ Maintenance Schedule”).

CAUTION

Never turn off the engine to coast down hills. Your power steering and brake booster will not function without the engine running. Also, the emission control system operates properly only when the engine is running.

Part 4

IN CASE OF AN EMERGENCY

- If your vehicle will not start
- If your engine stalls while driving
- If your vehicle overheats
- If you have a flat tire
- If your vehicle needs to be towed
- If you cannot shift automatic transmission selector lever
- If you lose your keys

If your vehicle will not start— (a) Simple checks

Before making these checks, make sure you have followed the correct starting procedure given in “How to start the engine” in Part 3 and that you have sufficient fuel.

If the engine is not turning over or is turning over too slowly—

1. Check that the battery terminals are tight and clean.
2. If the battery terminals are O.K., switch on the interior light.
3. If the light is out, dim or goes out when the starter is cranked, the battery is discharged. You may try jump starting. See “(c) Jump starting” for further instructions.

If the light is O.K., but the engine still will not start, it needs adjustment or repair. Call a Toyota dealer or qualified repair shop.

NOTICE
Do not pull- or push-start the vehicle. It may damage the vehicle or cause a collision when the engine starts. Also the three-way catalytic converter may overheat and become a fire hazard.

If the engine turns over at its normal speed but will not start—

1. Check that all the push-on connectors are tight. (For example, connections at the spark plugs, ignition coil and/or distributor)
2. If the connectors are O.K., the engine may be flooded because of repeated cranking. See “(b) Starting a flooded engine” for further instructions.

(b) Starting a flooded engine

If the engine will not start, your engine may be flooded because of repeated cranking.

If this happens, turn the key to “START” with the accelerator pedal held down. Keep the key and accelerator pedal so for 15 seconds and release them. Then try starting the engine with your foot off the accelerator pedal.

If the engine does not start after 15 seconds of cranking, release the key, wait a few minutes and try again.

If the engine still will not start, it needs adjustment or repair. Call a Toyota dealer or qualified repair shop for assistance.

NOTICE

Do not crank for more than 15 seconds at a time. This may overheat the starter and wiring systems.

(c) Jump starting

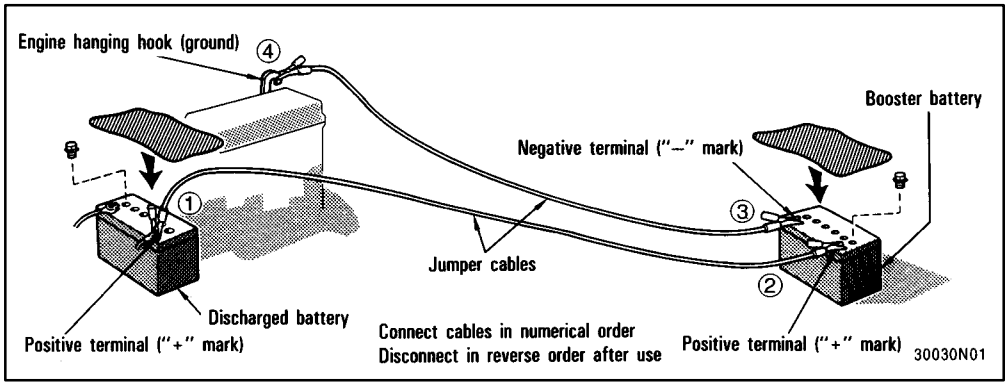

To avoid serious personal injury and damage to your vehicle which might result from battery explosion, acid burns, electrical burns, or damaged electronic components, these instructions must be followed precisely.

If you are unsure about how to follow this procedure, we strongly recommend that you seek the help of a competent mechanic or towing service.

⚠ CAUTION

- **Batteries contain sulfuric acid which is poisonous and corrosive. Wear protective safety glasses when jump starting, and avoid spilling acid on your skin, clothing, or vehicle.**
- **If you should accidentally get acid on yourself or in your eyes, remove any contaminated clothing and flush the affected area with water for at least 15 minutes. Then get immediate medical attention. If possible, continue to apply water with a sponge or cloth while en route to the medical office.**

- **The gas normally produced by a battery will explode if a flame or spark is brought near. Use only standardized jumper cables and do not smoke or light a match while jump starting.**

NOTICE

The battery used for boosting must be 12 V. Do not jump start unless you are sure that the booster battery is correct.

JUMP STARTING PROCEDURE

1. If the booster battery is installed in another vehicle, make sure the vehicles are not touching. Turn off all unnecessary lights and accessories.

2. If required, remove all the vent plugs from the booster and discharged batteries. Lay a cloth over the open vents on the batteries. (This helps reduce the explosion hazard, personal injuries and burns.)

3. If the engine in the vehicle with the booster battery is not running, start it and let it run for a few minutes. During jump starting, run the engine at about 2000 rpm with the accelerator pedal lightly depressed.

4. Connect the jumper cables in the exact order shown in the illustration: positive terminal ("+" mark)-to-positive terminal ("+"mark), and negative terminal ("-" mark)-to-engine or body ground. Note that you first connect the positive cable to the discharged battery and then to the booster battery. Next, connect the negative cable to the booster battery and then to a solid, stationary, unpainted, metallic point (e.g. engine hanging hook) away from the battery. Do not connect it to or near any part that moves when the engine is cranked.

NOTICE

When making the connections, do not lean over the battery or accidentally let the jumper cables or clamps touch anything except the correct battery terminals or the ground.

5. Start your engine in the normal way. After starting, run it at about 2000 rpm for several minutes with the accelerator pedal lightly depressed.

6. Carefully disconnect the cables in the exact reverse order: the negative cable and then the positive cable.

7. Carefully dispose of the battery cover cloths—they may now contain sulfuric acid.

8. If removed, replace all the battery vent plugs.

If the cause of your battery discharging is not apparent (for example, lights left on), you should have it checked.

If your engine stalls while driving

If your engine stalls while driving…

1. Reduce your speed gradually, keeping a straight line. Move cautiously off the road to a safe place.
2. Turn on your emergency flashers.
3. Try starting the engine again.

If the engine will not start, see “If your vehicle will not start”.

CAUTION

If the engine is not running, the power assist for the brakes and steering will not work so steering and braking will be much harder than usual.

If your vehicle overheats

If your engine coolant temperature gauge indicates overheating, if you experience a loss of power, or if you hear a loud knocking or pinging noise, the engine has probably overheated. You should follow this procedure…

1. Pull safely off the road, stop the vehicle and turn on your emergency flashers. Put the transmission in “P” (automatic) or neutral (manual) and apply the parking brake. Turn off the air conditioning if it is being used.
2. If coolant or steam is boiling out of the radiator or reservoir, stop the engine. Wait until the steam subsides before opening the hood. If there is no coolant boiling over or steam, leave the engine running and make sure the electric cooling fan is operating. If it is not, turn the ignition off.

CAUTION

To help avoid personal injury, keep the hood closed until there is no steam. Escaping steam or coolant is a sign of very high pressure.

3. Visually check to see if the engine drive belt (water pump belt) is broken or loose. Look for obvious coolant leaks from the radiator, hoses, and under the vehicle. However, note that water draining from the air conditioning is normal if it has been used.

CAUTION

When the engine is running, keep hands and clothing away from the moving fan and engine drive belts.

4. If the engine drive belt is broken or the coolant is leaking, stop the engine immediately. Call a Toyota dealer for assistance.
5. If the engine drive belt is O.K. and there are no obvious leaks, check the coolant reservoir. If it is dry, add coolant to the reservoir while the engine is running. Fill it about half full.

CAUTION

Do not attempt to remove the radiator cap when the engine and radiator are hot. Serious injury could result from scalding hot fluid and steam blown out under pressure.

6. After the engine coolant temperature has cooled to normal, again check the coolant level in the reservoir. If necessary, bring it up to half full again. Serious coolant loss indicates a leak in the system. You should have it checked as soon as possible at your Toyota dealer.

If you have a flat tire—

1. Reduce your speed gradually, keeping a straight line. Move cautiously off the road to a safe place well away from the traffic. Avoid stopping on the center divider of a highway. Park on a level spot with firm ground.

2. Stop the engine and turn on your emergency flashers.

3. Firmly set the parking brake and put the transmission in “P” (automatic) or reverse (manual).

4. Have everyone get out of the vehicle on the side away from traffic.

5. Read the following instructions thoroughly.

CAUTION

When jacking, be sure to observe the following to reduce the possibility of personal injury:

- **Follow jacking instructions.**
- **Use the jack only for lifting your vehicle during wheel changing.**
- **Never get beneath the vehicle when supported by a jack.**
- **Do not start or run the engine while your vehicle is supported by a jack.**

NOTICE

Do not continue driving with a deflated tire. Driving even a short distance can damage a tire beyond repair.

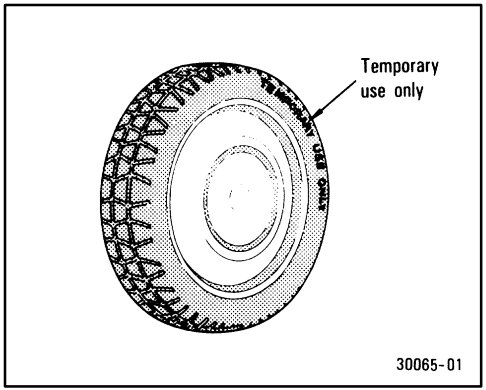

Compact spare tire

The compact spare tire is designed for temporary emergency use only.

The standard tire should be repaired and replaced as soon as possible.

The compact spare tire is identified by the distinctive wording “TEMPORARY USE ONLY” molded into the side wall of the tire.

The compact spare tire saves space in your luggage compartment, and its lighter weight helps to improve fuel economy and permits easier installation in case of a flat tire.

The compact spare tire can be used many times, if necessary. It has tread life of up to 4800 km (3000 miles) depending on road conditions and your driving habits. When tread wear indicators appear on the tire, replace the tire.

See also the tire section in Chapter 7-2 for details on the tread wear indicators and other service information.

CAUTION

- **The compact spare tire was designed especially for your Toyota. Do not use it on any other vehicle.**
- **Do not exceed 80 km/h (50 mph) when driving with the compact spare tire.**

NOTICE

Your ground clearance is reduced when the compact spare tire is installed so avoid driving over obstacles and drive slowly on rough, unpaved roads and speed bumps. Also, do not attempt to go through an automatic car wash as the vehicle may get caught, resulting in damage.

—Required tools and spare tire

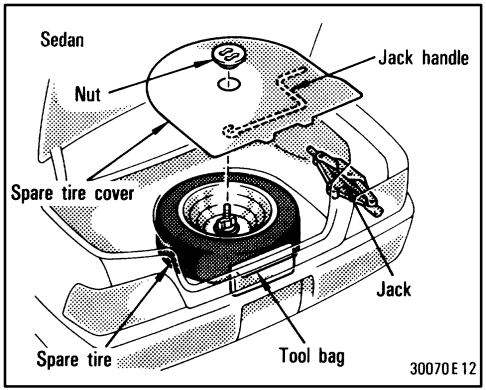

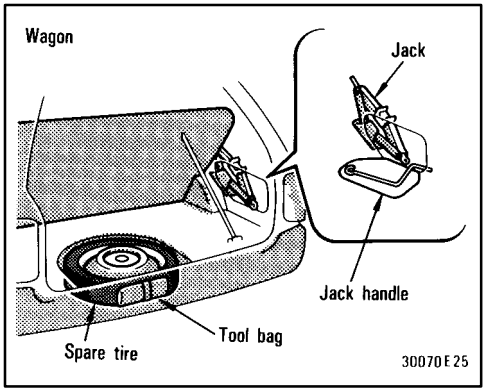

1. Get the tool bag, jack, jack handle and spare tire.

To prepare yourself for an emergency, you should familiarize yourself with the use of the jack, each of the tools and their storage locations.

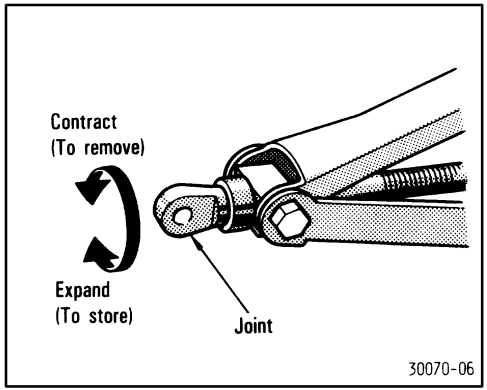

When removing the jack, turn the joint by hand towards the CONTRACT direction until the jack is free. When storing, turn the joint by hand towards the EXPAND direction until the jack is firmly secured to prevent it from flying forward during a collision or sudden braking.

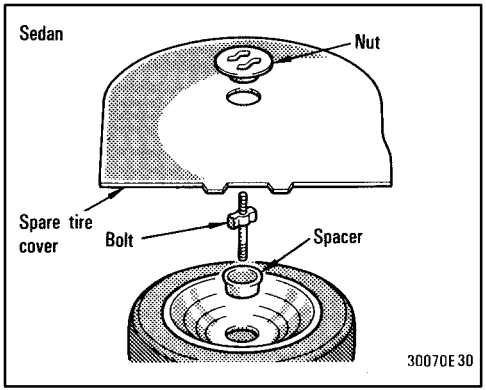

To remove the spare tire:

1. Loosen the nut and remove it.
2. Remove the spare tire cover.
3. Loosen and remove the bolt and spacer.
4. Take the spare tire out of the vehicle.

When storing the spare tire, put it in place with the outer side of the wheel facing up. Then secure the tire by repeating the above removal steps in reverse order to prevent it from flying forward during a collision or sudden braking.

To install the nut, just push it down.

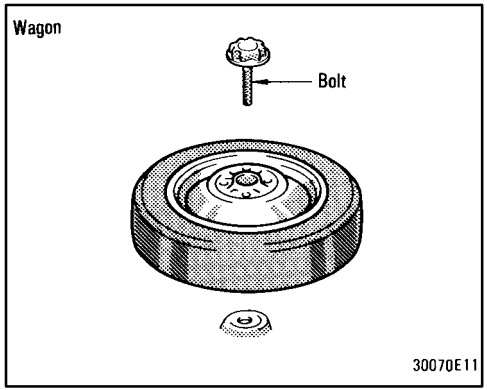

To remove the spare tire, loosen the bolt and remove it.

When storing the spare tire, put it in place with the outer side of the wheel facing up and secure it to prevent it from flying forward during a collision or sudden braking.

—Blocking the wheel

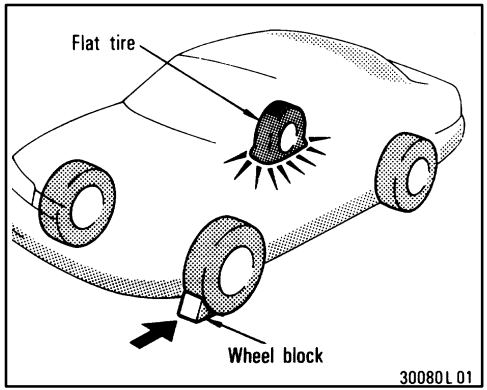

2. Block the wheel diagonally opposite the flat tire to keep the vehicle from rolling when it is jacked up.

When blocking the wheel, place a wheel block from the front for the front wheels or from the rear for the rear wheels.

—Removing wheel ornament

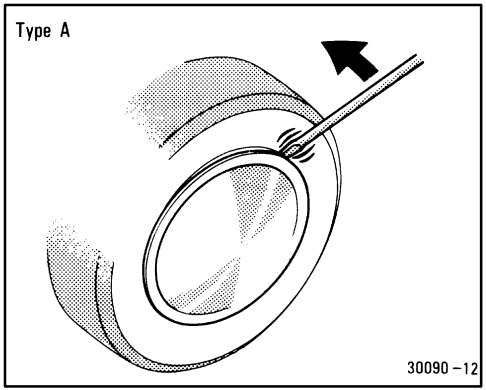

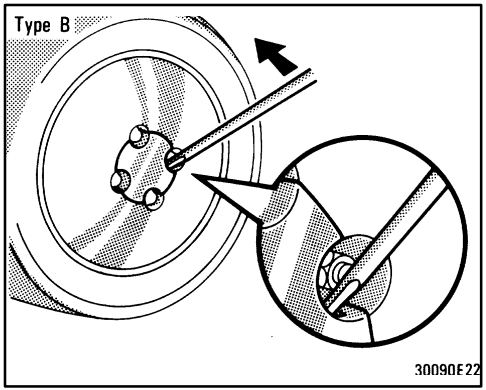

3. Remove the wheel ornament.

Skip this step if your vehicle is equipped with aluminum wheels.

Pry off the wheel ornament, using the beveled end of the wheel nut wrench as shown.

CAUTION

Do not try to pull off the ornament by hand. Take due care in handling the ornament to avoid unexpected personal injury.

—Loosening wheel nuts

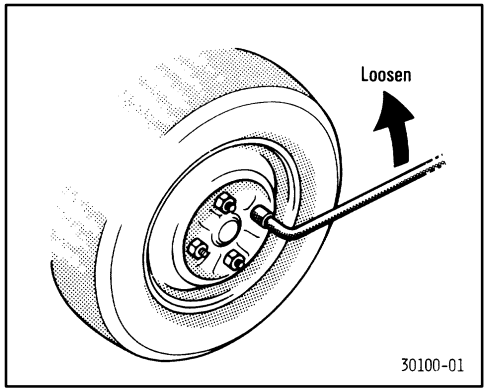

4. Loosen all the wheel nuts.
Always loosen the wheel nuts before raising the vehicle.

The nuts turn counterclockwise to loosen. To get maximum leverage, fit the wrench to the nut so that the handle is on the right side, as shown above. Grab the wrench near the end of the handle and pull up on the handle. Be careful that the wrench does not slip off the nut.

Do not remove the nuts yet—just unscrew them about one-half turn.

—Positioning the jack

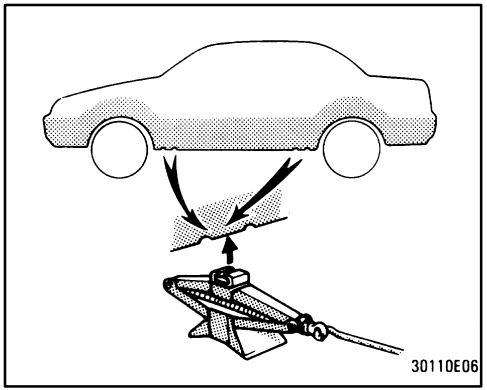

5. Position the jack at the correct jack point as shown.
Make sure the jack is positioned on a level and solid place.

—Raising your vehicle

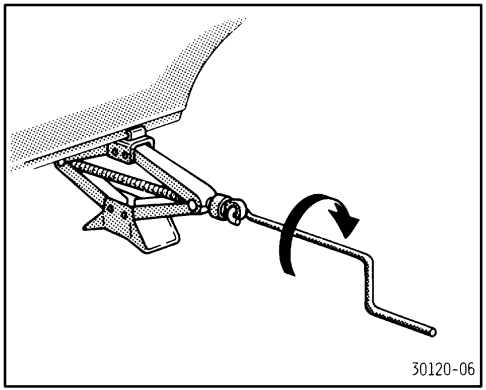

6. After making sure that no one is in the vehicle, raise it high enough so that the spare tire can be installed.
Remember you will need more ground clearance when putting on the spare tire than when removing the flat tire.

To raise the vehicle, insert the jack handle into the jack (it is a loose fit) and turn it clockwise. As the jack touches the vehicle and begins to lift, double-check that it is properly positioned.

CAUTION

Never get under the vehicle when it is supported by the jack alone.

—Changing wheels

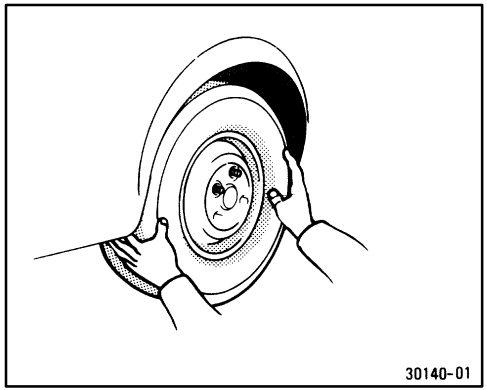

7. Remove the wheel nuts and change tires.

Lift the flat tire straight off and put it aside.

Roll the spare wheel into position and align the holes in the wheel with the bolts. Then lift up the wheel and get at least the top bolt started through its hole. Wiggle the tire and press it back over the other bolts.

On aluminum wheels, put the wheel ornament off from the dismounted wheel by tapping on the reverse side with the wheel nut wrench. This prevents the ornament from being damaged.

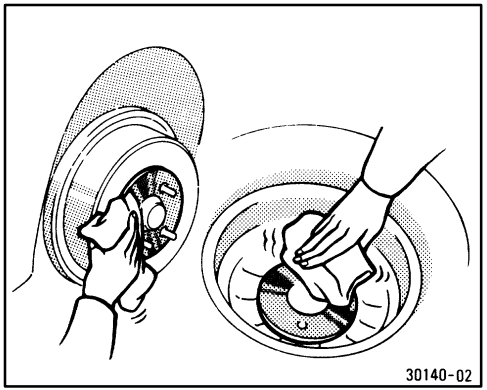

Before putting on wheels, remove any corrosion on the mounting surfaces with a wire brush or such. Installation of wheels without good metal-to-metal contact at the mounting surface can cause wheel nuts to loosen and eventually cause a wheel to come off while driving. Therefore after the first 1600 km (1000 miles), check to see that the wheel nuts are tight.

—Reinstalling wheel nuts

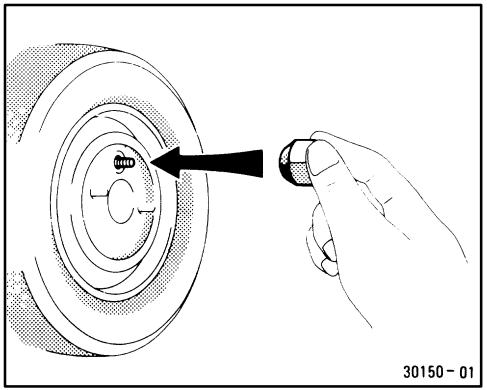

8. Reinstall all the wheel nuts finger tight.

Reinstall the wheel nuts (tapered end inward) and tighten them as much as you can by hand. Press back on the tire and see if you can tighten them more.

—Lowering your vehicle

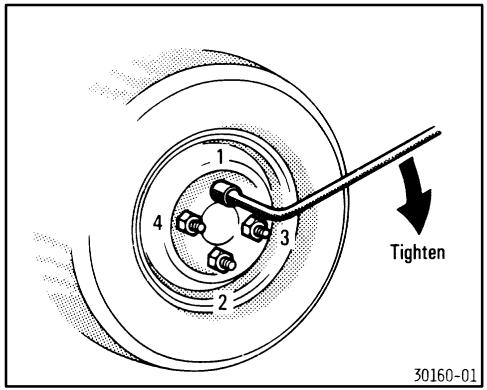

9. Lower the vehicle completely and tighten the wheel nuts.

To lower the vehicle, turn the jack handle counterclockwise.

Use only the wheel nut wrench to tighten the nuts. Do not use other tools or any additional leverage other than your hands, such as a hammer, pipe or your foot. Make sure the wrench is securely engaged over the nut.

Tighten each nut a little at a time in the order shown. Repeat the process until all the nuts are tight.

—Reinstalling wheel ornament

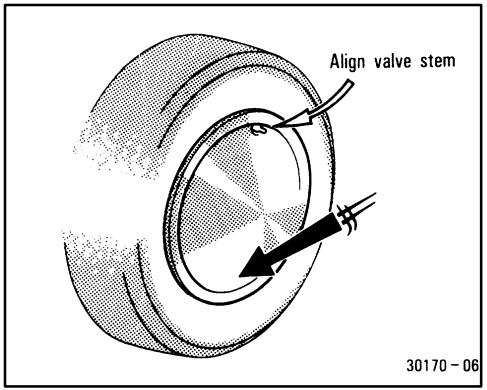

10. Reinstall the wheel ornament.

The wheel ornament cannot be installed on the compact spare tire.

Put the wheel ornament into position and then tap it firmly with the side or heel of your hand to snap it into place.

CAUTION

Take due care in handling the ornament to avoid unexpected personal injury.

—After changing wheels

11. Check the air pressure of the replaced tire.

Adjust the air pressure to the specification designated in Part 8. If the pressure is lower, drive slowly to the nearest service station and fill to the correct pressure.

Do not forget to reinstall the tire inflation valve cap as dirt and moisture could get into the valve core and possibly cause air leakage. If the cap is missing, have a new one put on as soon as possible.

12. Restow all the tools, jack and flat tire securely.

As soon as possible after changing wheels, tighten the wheel nuts to the torque specified in Part 8 with a torque wrench and have a technician repair the flat tire and replace the spare tire with it.

CAUTION

Before driving, make sure all the tools, jack and flat tire are securely in place in their storage location to reduce the possibility of personal injury during a collision or sudden braking.

If your vehicle needs to be towed—

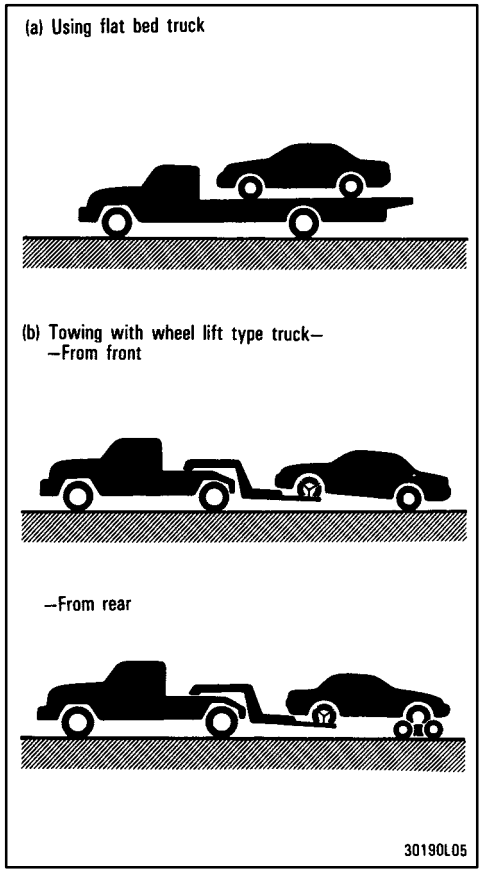

If towing is necessary, we recommend you have it done by your Toyota dealer or a commercial tow truck service.

Proper equipment will help ensure that your vehicle is not damaged while being towed. Commercial operators are generally aware of the state/provincial and local laws pertaining to towing.

Your vehicle can be damaged if it is towed incorrectly. Although most operators know the correct procedure, it is possible to make a mistake. To avoid damage to your vehicle, make sure the following few precautions are observed. If necessary, show this page to the tow truck driver.

TOWING PRECAUTIONS:

Use a safety chain system for all towing, and abide by the state/provincial and local laws. The wheels and axle on the ground must be in good condition. If they are damaged, use a towing dolly.

(a) Using flat bed truck

Toyota recommends this as the best method for your vehicle.

(b) Towing with wheel lift type truck

From front—Release the parking brake.

From rear—

- Manual transmission:

  We recommend using a towing dolly under the front wheels. If you do not use a towing dolly, place the ignition key in the “ACC” position and put the transmission in neutral.

NOTICE

Do not tow with the key removed or in the “LOCK” position when towing from the rear without a towing dolly. The steering lock mechanism is not strong enough to hold the front wheels straight.

- Automatic transmission:

  Use a towing dolly under the front wheels.

NOTICE

Never tow a vehicle with an automatic transmission from the rear with the front wheels on the ground, as this may cause serious damage to the transmission.

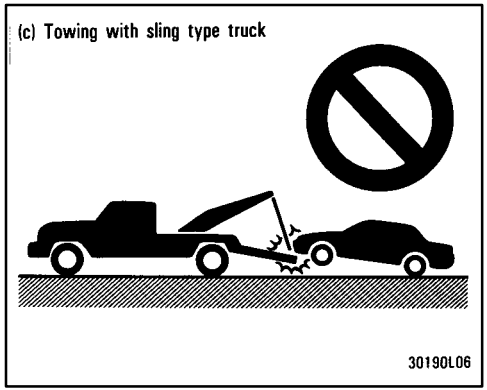

(c) Towing with sling type truck

NOTICE

Do not tow with sling type truck, either from the front or rear. This may cause body damage.

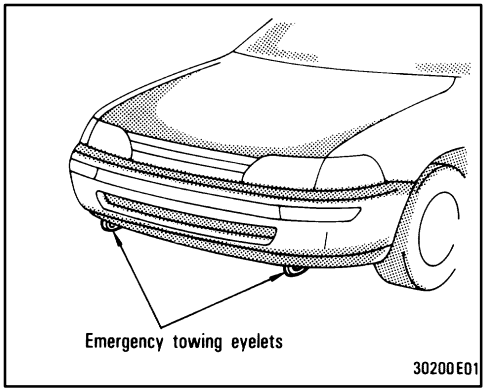

If towing service is not available in an emergency, your vehicle may be temporarily towed by a cable secured to emergency towing eyelets under the front of the vehicle.

A driver must be in the vehicle to steer it and operate the brakes.

Towing in this manner may be done only on hard-surfaced roads for a short distance and at low speeds. Also, the wheels, axles, drive train, steering and brakes must all be in good condition.

Before towing, release the parking brake and put the transmission in neutral (manual) or “N” (automatic). The key must be in “ACC” (engine off) or “ON” (engine running).

CAUTION

If the engine is not running, the power assist for the brakes and steering will not work so steering and braking will be much harder than usual.

If you cannot shift automatic transmission selector lever

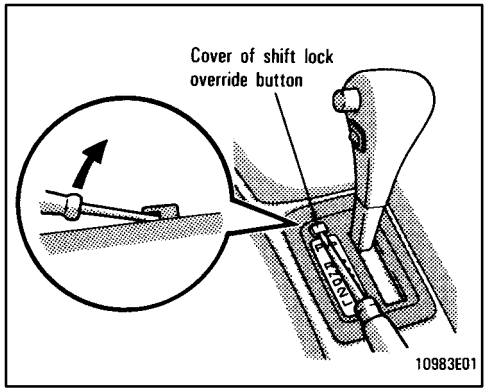

If you cannot shift the selector lever out of "P" position to other positions even though the brake pedal is depressed, use the shift lock override button as follows:

1. Turn the ignition key to "LOCK" position. Make sure the parking brake is on.

2. Pry up the cover with a flat-bladed screwdriver or equivalent.

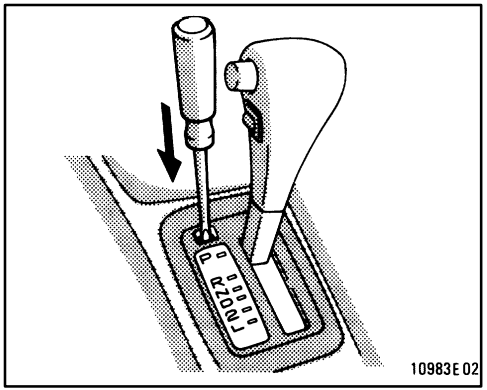

3. Insert the screwdriver or equivalent into the hole to push down the shift lock override button. You can shift out of "P" position only while pushing the button.

4. Shift into "N" position.

5. Insert the cover.

6. Start the engine. For your safety, keep the brake pedal depressed.

Be sure to have the system checked by your Toyota dealer as soon as possible.

If you lose your keys

Many Toyota dealers can make a new key if you can give them the key number.

See the suggestion given in "Keys" in Chapter 1-2.

If your keys are locked in the vehicle and you cannot get a duplicate, many Toyota dealers can still open the door for you, using their special tools. If you must break a window to get in, we suggest breaking the smallest side window because it is the least expensive to replace. Be extremely cautious to avoid cuts from the glass.

Part 5

CORROSION PREVENTION AND APPEARANCE CARE

- Protecting your Toyota from corrosion
- Washing and waxing your Toyota
- Cleaning the interior

Protecting your Toyota from corrosion

Toyota, through its diligent research, design and use of the most advanced technology available, has done its part to help prevent corrosion and has provided you with the finest quality vehicle construction. Now, it is up to you. Proper care of your Toyota can help ensure long-term corrosion prevention.

The most common causes of corrosion to your vehicle are:

- The accumulation of road salt, dirt and moisture in hard-to-reach areas under the vehicle.
- Chipping of paint, or undercoating caused by minor accidents or by stones and gravel.

Care is especially important if you live in particular areas or operate your vehicle under certain environmental conditions:

- Road salt or dust control chemicals will accelerate corrosion, as will the presence of salt in the air near the seacoast or in areas of industrial pollution.
- High humidity accelerates corrosion especially when temperatures range just above the freezing point.
- Wetness or dampness to certain parts of your vehicle for an extended period of time, may cause corrosion even though other parts of the vehicle may be dry.
- High temperatures will cause corrosion to those components of the vehicle which are prevented from quick-drying due to lack of proper ventilation.

The above signifies the necessity to keep your vehicle, particularly the underside, as clean as possible and to repair any damage to paint or protective coatings as soon as possible.

To help prevent corrosion on your Toyota, follow these guidelines:

Wash your vehicle frequently. It is, of course, necessary to keep your vehicle clean by regular washing, but to prevent corrosion, the following points should be observed:

- If you drive on salted roads in the winter or if you live near the ocean, you should hose off the undercarriage at least once a month to minimize corrosion.
- High pressure water or steam is effective for cleaning the vehicle's underside and wheel housings. Pay particular attention to these areas as it is difficult to see all the mud and dirt. It will do more harm than good to simply wet the mud and debris without removing them. The lower edge of doors, rocker panels and frame members have drain holes which should not be allowed to clog with dirt as trapped water in these areas can cause corrosion.

- Wash the underside of the vehicle thoroughly when winter is over.

See “Washing and waxing your Toyota” for more tips.

Check the condition of your vehicle’s paint and trim. If you find any chips or scratches in the paint, touch them up immediately to prevent corrosion from starting. If the chips or scratches have gone through the bare metal, have a qualified body shop make the repair.

Check the interior of your vehicle. Water and dirt can accumulate under the floor mats and could cause corrosion. Occasionally check under the mats to make sure the area is dry. Be particularly careful when transporting chemicals, cleansers, fertilizers, salt, etc; these should be transported in proper containers. If a spill or leak should occur, immediately clean and dry the area.

Use mud shields on your wheels. If you drive on salted or gravel roads, mud shields help protect your vehicle. Full-size shields, which come as near to the ground as possible, are the best. We recommend that the fittings and the area where the shields are installed be treated to resist corrosion. Your Toyota dealer will be happy to assist in supplying and installing the shields if they are recommended for your area.

Do not park your vehicle in a damp, poorly ventilated garage. If you wash your vehicle in the garage, or if you drive it in covered with water or snow, your garage may be so damp it will cause corrosion. Even if your garage is heated, a wet vehicle can corrode if the ventilation is poor.

Washing and waxing your Toyota

Washing your Toyota by hand

Work in the shade and wait until the vehicle body is not hot to the touch.

1. Rinse off loose dirt with a hose. Remove any mud or road salt from the underside of the vehicle or in the wheel wells.

2. Wash with a mild car-wash soap, mixed according to the manufacturer’s instructions. Use a soft cotton mitt and keep it wet by dipping it frequently into the wash water. Do not rub hard—let the soap and water remove the dirt.

Aluminum wheels: Use only a mild soap or neutral detergent.

Plastic bumpers: Wash carefully. Do not scrub with abrasive cleaners. The bumper faces are soft.

Road tar: Remove with turpentine or cleaners that are marked safe for painted surfaces.

NOTICE
Do not use gasoline or strong solvents, which may be toxic or cause damage.

3. Rinse thoroughly—dried soap can cause streaking. In hot weather you may need to rinse each section right after you wash it.

4. To prevent water spots, dry the vehicle using a clean soft cotton towel. Do not rub or press hard—you might scratch the paint.

Automatic car wash

Your vehicle may be washed in an automatic car wash, but remember that the paint can be scratched by some type of brushes, unfiltered washing water, or the washing process itself. Scratching reduces paint durability and gloss, especially on darker colors. The manager of the car wash should be able to advise you whether the process is safe for the paint on your vehicle.

Waxing your Toyota

Polishing and waxing is recommended to maintain the original beauty of your Toyota's finish.

1. Always wash and dry the vehicle before you begin waxing, even if you are using a combined cleaner and wax.
2. Use a good quality polish and wax. If the finish has become extremely weathered, use a car-cleaning polish, followed by a separate wax. Carefully follow the manufacturer's instructions and precautions. Be sure to polish and wax the chrome trim as well as the paint.
3. Wax the vehicle again when water does not bead but remains on the surface in large patches.

NOTICE

Always remove the plastic bumpers if your vehicle is re-painted and placed in a high heat paint waxing booth. High temperatures could damage the bumpers.

Cleaning the interior

CAUTION

Do not wash the vehicle floor with water, or allow water to get onto the floor when cleaning the vehicle interior or exterior. Water may get into audio components or other electrical components above or under the floor carpet (or mat) and cause a malfunction; and it may cause body corrosion.

Vinyl interior

The vinyl upholstery may be easily cleaned with a mild soap or detergent and water.

First vacuum over the upholstery to remove loose dirt. Then, using a sponge or soft cloth, apply the soap solution to the vinyl. After allowing it to soak in for a few minutes to loosen the dirt, remove the dirt and wipe off the soap with a clean damp cloth. If all the dirt does not come off, repeat the procedure. Commercial foaming- type vinyl cleaners are also available which work well. Follow the manufacturer's instructions.

NOTICE

Do not use solvent, thinner, gasoline or window cleaner on the interior.

Carpets

Use a good foam-type shampoo to clean the carpets.

Begin by vacuuming thoroughly to remove as much dirt as possible. Several types of foam cleaners are available; some are in aerosol cans and others are powders or liquids which you mix with water to produce a foam. To shampoo the carpets, use a sponge or brush to apply the foam. Rub in overlapping circles.

Do not apply water—the best results are obtained by keeping the carpet as dry as possible. Read the shampoo instructions and follow them closely.

Seat belts

The seat belts may be cleaned with mild soap and water or with lukewarm water.

Use a cloth or sponge. As you are cleaning, check the belts for excessive wear, fraying, or cuts.

NOTICE

Do not use dye or bleach on the belts—it may weaken them.

Built-in child restraint

The built-in child restraint may be cleaned with mild soap and lukewarm water.

NOTICE

Do not use dye or bleach on the belts—it may weaken them.

The built-in child restraint pad is attached to the child restraint cushion and seatback with fastener tapes. You can remove the pad, machine wash it in cold water and tumble dry it on a low heat setting.

NOTICE

Never bleach or iron the pad, and do not dry clean it.

Windows

The windows may be cleaned with any household window cleaner.

NOTICE

When cleaning the inside of the windows, be careful not to scratch or damage the heater wires on the rear window.

Air conditioning control panel, car audio, instrument panel, console panel, and switches

Use a soft damp cloth for cleaning.

Soak a clean soft cloth in water or lukewarm water then lightly wipe off any dirt.

NOTICE

- ***Do not use organic substances (solvents, kerosene, alcohol, gasoline, etc.) or alkaline or acidic solutions. These chemicals can cause discoloring, staining or peeling of the surface.***
- ***If you use cleaners or polishing agents, make sure their ingredients do not include the substances mentioned above.***
- ***If you use a liquid car freshener, do not spill the liquid onto the vehicle's interior surfaces. It may contain the ingredients mentioned above. Immediately clean any spill using the method mentioned above.***

If you have any questions about the cleaning of your Toyota, your local Toyota dealer will be pleased to answer them.

Part 6

VEHICLE MAINTENANCE AND CARE

- Maintenance requirements
- General maintenance
- Does your vehicle need repairing?

For scheduled maintenance information, please refer to the separate “Owner’s Manual Supplement/Maintenance Schedule”.

Maintenance requirements

Your Toyota vehicle has been designed for fewer maintenance requirements with longer service intervals to save both your time and money. However, each regular maintenance, as well as day-to-day care, is more important than ever before to ensure smooth, trouble-free, safe, and economical drivings.

It is the owner’s responsibility to make sure the specified maintenance, including general maintenance service, is performed. Note that both the new vehicle and emission control system warranties specify that proper maintenance and care must be performed. See Owner’s Guide, Owner’s Manual Supplement or Warranty Booklet for complete warranty information.

General maintenance

General maintenance items are those day-to-day care practices that are important to your vehicle for proper operation. It is the owner’s responsibility to ensure that the general maintenance items are performed regularly.

These checks or inspections can be done either by yourself or a qualified technician, or if you prefer, your Toyota dealer will be pleased to do them at a nominal cost.

Scheduled maintenance

The scheduled maintenance items listed in the “Owner’s Manual Supplement/ Maintenance Schedule” are those required to be serviced at regular intervals.

For details of your maintenance schedule, read the separate “Owner’s Manual Supplement/Maintenance Schedule”.

It is recommended that any replacement parts used for maintenance or for the repair of the emission control system be Toyota supplied.

The owner may elect to use non-Toyota supplied parts for replacement purposes without invalidating the emission control system warranty. However, use of replacement parts which are not of equivalent quality may impair the effectiveness of the emission control systems.

You may also elect to have maintenance, replacement, or repair of the emission control devices and system performed by any automotive repair establishment or individual without invalidating this warranty. See Owner’s Guide, Owner’s Manual Supplement or Warranty Booklet for complete warranty information.

Where to go for service?

Toyota technicians are well-trained specialists and are kept up to date with the latest service information through technical bulletins, service tips, and in-dealership training programs. They learn to work on Toyotas before they work on your vehicle, rather than while they are working on it.

You can be confident that your Toyota dealer's service department performs the best job to meet the maintenance requirements on your vehicle—reliably and economically.

Your copy of the repair order is proof that all required maintenance has been performed for warranty coverage. And if any problems should arise with your vehicle while under warranty, your Toyota dealer will promptly take care of it. Again, be sure to keep a copy of the repair order for any service performed on your Toyota.

What about do- it- yourself maintenance?

Many of the maintenance items are easy to do yourself if you have a little mechanical ability and a few basic automotive tools. Simple instructions for how to perform them are presented in Part 7.

If you are a skilled do-it-yourself mechanic, the Toyota service manuals are recommended. Please be aware that do-it-yourself maintenance can affect your warranty coverage. See Owner's Guide, Owner's Manual Supplement or Warranty Booklet for the details.

General maintenance

Listed below are the general maintenance items that should be performed as frequently as specified. In addition to checking the items listed, if you notice any unusual noise, smell or vibration, you should investigate the cause or take your vehicle to your Toyota dealer or a qualified service shop immediately. It is recommended that any problem you notice be brought to the attention of your dealer or the qualified service shop for their advice.

CAUTION

Make these checks only where adequate ventilation can be obtained if you run the engine.

OUTSIDE THE VEHICLE

Items listed below should be performed from time to time, unless otherwise specified.

Tire pressure

Check the pressure with a gauge every two weeks, or at least once a month. See Chapter 7-2 for additional information.

Tire surface and wheel nuts

Check the tires carefully for cuts, damage or excessive wear. See Chapter 7-2 for additional information. When checking the tires, make sure no nuts are missing, and check the nuts for looseness. Tighten them if necessary.

Tire rotation

Rotate the tires every 12000 km (7500 miles). See Chapter 7-2 for additional information.

Fluid leaks

Check underneath for leaking fuel, oil, water or other fluid after the vehicle has been parked for a while. If you smell fuel fumes or notice any leak, have the cause found and corrected immediately.

Doors and engine hood

Check that all doors including trunk lid or back door operate smoothly and all latches lock securely. Make sure the engine hood secondary latch secures the hood from opening when the primary latch is released.

INSIDE THE VEHICLE

Items listed below should be checked regularly, e.g. while performing periodic services, cleaning the vehicle, etc.

Lights

Make sure the headlights, stop lights, tail lights, turn signal lights, and other lights are all working. Check headlight aim.

Service reminder indicators and warning buzzers

Check that all service reminder indicators and warning buzzers function properly.

Steering wheel

Be alert for changes in steering condition, such as hard steering or strange noise.

Seats

Check that all front seat controls such as seat adjusters, seatback recliner, etc. operate smoothly and that all latches lock securely in any position. Check that the head restraints move up and down smoothly and that the locks hold securely in any latched position. For folding-down rear seatbacks and swing-up rear seat cushion, check that the latches lock securely.

Seat belts

Check that the seat belt system such as buckles, retractors and anchors operate properly and smoothly. Make sure the belt webbing is not cut, frayed, worn or damaged.

Accelerator pedal

Check the pedal for smooth operation and uneven pedal effort or catching.

Clutch pedal

Check the pedal for smooth operation.

Brake pedal

Check the pedal for smooth operation and that the pedal has the proper clearance. Check the brake booster function.

Brakes

At a safe place, check that the brakes do not pull to one side when applied.

Parking brake

Check that the lever has the proper travel and that, on a safe incline, your vehicle is held securely with only the parking brake applied.

Automatic transmission "Park" mechanism

Check the lock release button of the selector lever for proper and smooth operation. On a safe incline, check that your vehicle is held securely with the selector lever in "P" position and all brakes released.

IN THE ENGINE COMPARTMENT

Items listed below should be checked from time to time , e.g. each time when refueling.

Washer fluid

Make sure there is sufficient fluid in the tank. See Chapter 7-3 for additional information.

Engine coolant level

Make sure the coolant level is between the "FULL" and "LOW" lines on the see-through reservoir when the engine is cold. See Chapter 7-2 for additional information.

Battery electrolyte level

Make sure the electrolyte level of all battery cells is between upper and lower level lines on the case. Add only distilled water when replenishing. See Chapter 7-3 for additional information.

Brake fluid level

Make sure the brake fluid level is correct. See Chapter 7-2 for additional information.

Engine oil level

Check the level on the dipstick with the engine turned off and the vehicle parked on a level spot. See Chapter 7-2 for additional information.

Power steering fluid level

Check the level on the dipstick. The level should be in the "HOT" or "COLD" range depending on the fluid temperature. See Chapter 7-2 for additional information.

Exhaust system

If you notice any change in the sound of the exhaust or smell exhaust fumes, have the cause located and corrected immediately. (See engine exhaust cautions in Part 2.)

Does your vehicle need repairing?

Be on the alert for changes in performance, sounds, and visual tip-offs that indicate service is needed. Some important clues are as follows:

- Engine missing, stumbling, or pinging
- Appreciable loss of power
- Strange engine noises
- A leak under the vehicle (however, water dripping from the air conditioning after use is normal.)
- Change in exhaust sound (This may indicate a dangerous carbon monoxide leak. Drive with the windows open and have the exhaust system checked immediately.)
- Flat-looking tire; excessive tire squeal when cornering; uneven tire wear
- Vehicle pulls to one side when driving straight on a level road
- Strange noises related to suspension movement
- Loss of brake effectiveness; spongy feeling brake or clutch pedal; pedal almost touches floor; vehicle pulls to one side when braking
- Engine coolant temperature continually higher than normal

If you notice any of these clues, take your vehicle to your Toyota dealer as soon as possible. It probably needs adjustment or repair.

CAUTION

Do not continue driving with the vehicle unchecked. It could result in serious vehicle damage and possibly personal injury.

Part 7

DO-IT-YOURSELF MAINTENANCE—

Chapter 7-1

Introduction

- Engine compartment overview
- Fuse locations
- Do-it-yourself service precautions
- Parts and tools

Engine compartment overview (type A)

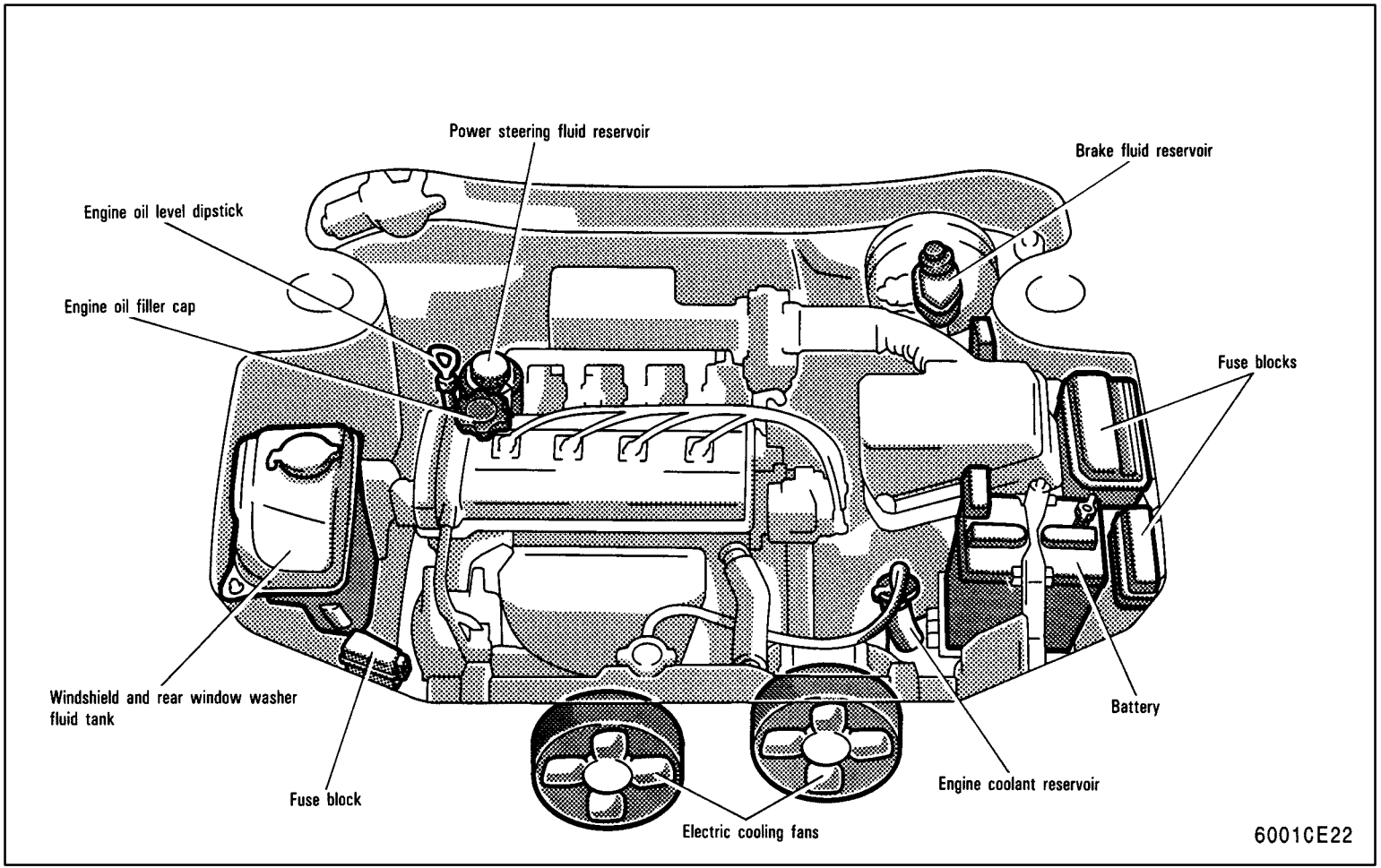

Engine compartment overview (type B)

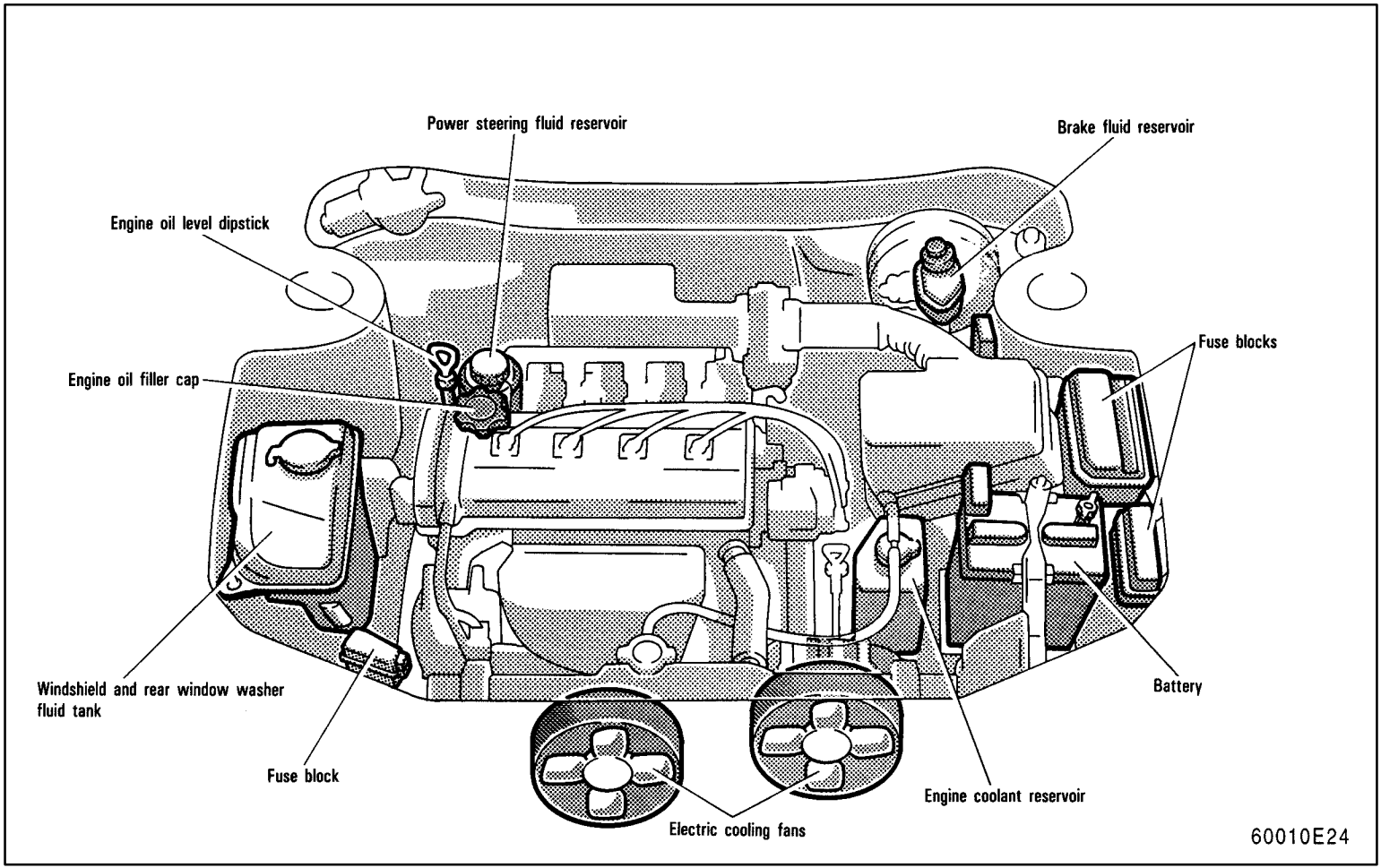

Fuse locations

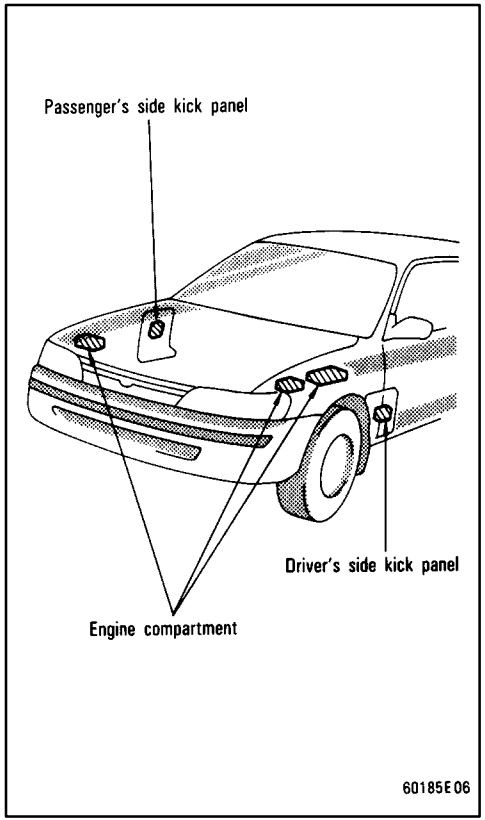

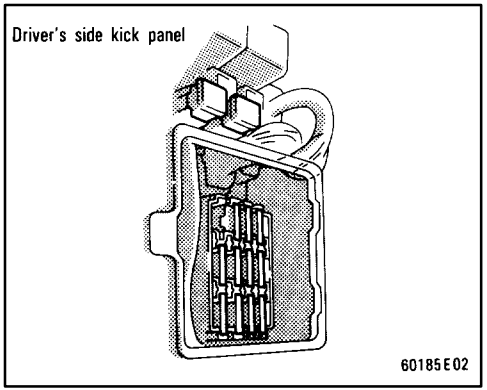

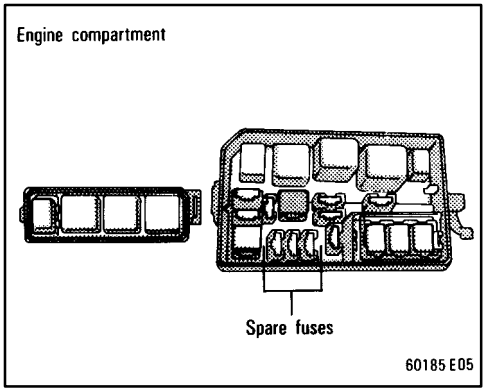

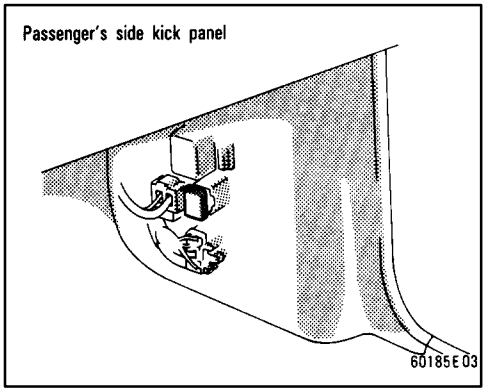

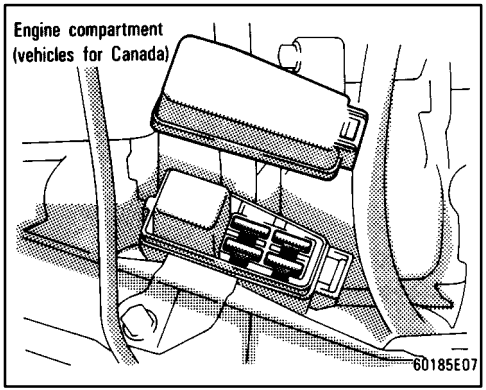

Do-it-yourself service precautions

If you perform maintenance by yourself, be sure to follow the correct procedure given in this part.

You should be aware that improper or incomplete servicing may result in operating problems.

Performing do-it-yourself maintenance during the warranty period may affect your warranty coverage. Read the separate Toyota Warranty statement for details and suggestions.

This part gives instructions only for those items that are relatively easy for an owner to perform. As explained in Part 6, there are still a number of items that must be done by a qualified technician with special tools.

For information on tools and parts for do-it-yourself maintenance, see “Parts and tools”.

Utmost care should be taken when working on your vehicle to prevent accidental injury. Here are a few precautions that you should be especially careful to observe:

CAUTION

- **When the engine is running, keep hands, clothing, and tools away from the moving fan and engine drive belts. (Removing rings, watches, and ties is advisable.)**
- **Right after driving, the engine compartment—the engine, radiator, exhaust manifold, power steering fluid reservoir and spark plug boots, etc.—will be hot. So be careful not to touch them. Oil, fluids and spark plugs may also be hot.**
- **If the engine is hot, do not remove the radiator cap or loosen the drain plugs to prevent burning yourself.**
- **Do not smoke, cause sparks or allow open flames around fuel or the battery. Their fumes are flamable.**
- **Be extremely cautious when working on the battery. It contains poisonous and corrosive sulfuric acid.**
- **Do not get under your vehicle with just the body jack supporting it. Always use automotive jack stands or other solid supports.**
- **Be sure that the ignition is off if you work near the electric cooling fans or radiator grille. With the ignition on, the electric cooling fan may automatically start to run if the air conditioning is on.**
- **Use eye protection whenever you work on or under your vehicle where you may be exposed to flying or falling material, fluid spray, etc.**
- **Used engine oil contains potentially harmful contaminants which may cause skin disorders such as inflammation or skin cancer, so care should be taken to avoid prolonged and repeated contact with it. To remove used engine oil from your skin, wash thoroughly with soap and water.**
- **Do not leave used oil within the reach of children.**
- **Dispose of used oil and filter only in a safe and acceptable manner. Do not dispose of used oil and filter in household trash, in sewers or onto the ground. Call your dealer or a service station for information concerning recycling or disposal.**

NOTICE

- ***Remember that battery and ignition cables carry high currents or voltages. Be careful of accidentally causing a short circuit.***
- ***Add only demineralized or distilled water to fill the radiator. And if you spill some of the coolant, be sure to wash it off with water to prevent it from damaging the parts or paint.***
- ***Do not allow dirt or anything else to fall through the spark plug holes.***
- ***Do not pry the outer electrode of a spark plug against the center electrode.***
- ***Use only spark plugs of the specified type. Using other types will cause engine damage, loss of performance or radio noise.***
- ***Do not overfill automatic transmission fluid, or the transmission could be damaged.***

- ***Do not drive with the air cleaner filter removed, or excessive engine wear could result. Also backfiring could cause a fire in the engine compartment.***
- ***Be careful not to scratch the glass surface with the wiper frame.***
- ***When closing the engine hood, check to see that you have not forgotten any tools, rags, etc.***

Parts and tools

Here is a list of parts and tools you will need on performing do-it-yourself maintenance. Remember all Toyota parts are designed in metric sizes, so your tools must be metric.

Checking the engine oil level

Parts (if level is low):

- Engine oil API SH, “Energy-Conserving II” multigrade or ILSAC multigrade having viscosity proper for your climate

Tools:

- Rag or paper towel
- Funnel (only for adding oil)

Checking the engine coolant level

Parts (if level is low):

- Ethylene-glycol antifreeze
- Demineralized or distilled water

Tools:

- Funnel (only for adding coolant)

Checking brake fluid

Parts (if level is low):

- SAE J1703 or FMVSS No. 116 DOT 3 brake fluid

Tools:

- Rag or paper towel
- Funnel (only for adding fluid)

Checking power steering fluid

Parts (if level is low):

- Automatic transmission fluid DEXRON®-II or-III

Tools:

- Rag or paper towel
- Funnel (only for adding fluid)

Checking battery condition

Non-maintenance batteries—

Tools:

- Warm water
- Baking soda
- Grease
- Conventional wrench (for terminal clamp bolts)

Maintenance type batteries—

Parts (if level is low):

- Distilled water

Tools:

- Warm water
- Baking soda
- Grease
- Conventional wrench (for terminal clamp bolts)
- Coin (for vent plugs)
- Funnel (only for adding distilled water)

Checking and replacing fuses

Parts (if replacement is necessary):

- Fuse with same amperage rating as original

Adding washer fluid

Parts:

- Water
- Washer fluid containing antifreeze (for winter use)

Tools:

- Funnel

Replacing light bulbs

Parts:

- Bulb with same number and wattage rating as original (See charts in “Replacing light bulbs” in Chapter 7-3.)

Tools:

- Screwdriver
- Wrench

Part 7

DO-IT-YOURSELF MAINTENANCE—

Chapter 7-2

Engine and Chassis

- Checking the engine oil level
- Checking the engine coolant level
- Checking brake fluid
- Checking power steering fluid
- Checking tire pressure
- Checking and replacing tires
- Rotating tires
- Installing snow tires and chains
- Replacing wheels
- Aluminum wheel precautions

Checking the engine oil level

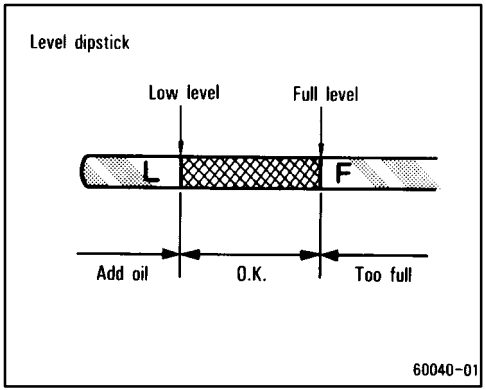

With the engine at operating temperature and turned off, check the oil level on the dipstick.

1. To get a true reading, the vehicle should be on a level spot. After turning off the engine, wait a few minutes for the oil to drain back into the bottom of the engine.
2. Pull out the dipstick, and wipe it clean with a rag.
3. Reinsert the dipstick—push it in as far as it will go, or the reading will not be correct.
4. Pull the dipstick out and look at the oil level on the end.

If the oil level is below or only slightly above the low level line, add engine oil of the same type as already in the engine.

Remove the oil filter cap and add engine oil in small quantities at a time, checking the dipstick.

The approximate quantity of oil needed to fill between the low level line and the full level line on the dipstick is indicated below for reference.

When the level reaches within the correct range, install the filler cap hand-tight.

Oil quantity, L (qt., Imp. qt.):

4A-FE engine	1.0 (1.1, 0.9)
7A-FE engine	1.2 (1.3, 1.1)

NOTICE

- ***Avoid overfilling, or the engine could be damaged.***
- ***Check the oil level on the dipstick once again after adding the oil.***

ENGINE OIL SELECTION

Use API SH, “Energy-Conserving II” multigrade engine oil or ILSAC multigrade engine oil.

Recommended viscosity (SAE):

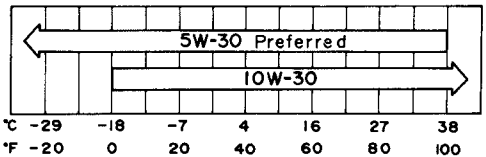

Temperature range anticipated before next oil change

60040-L03U

SAE 5W-30 is the best choice for your vehicle, for good fuel economy, and good starting in cold weather.

If you use SAE 10W-30 engine oil in extremely low temperatures, the engine may become difficult to start, so SAE 5W-30 engine oil is recommended.

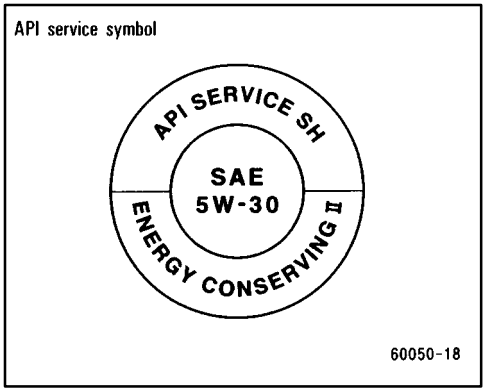

Oil identification marks

Either or both API registered marks are added to some oil containers to help you select the oil you should use.

The API Service Symbol is located anywhere on the outside of the container.

The top portion of the label shows the oil quality by API (American Petroleum Institute) designations such as SH. The center portion of the label shows the SAE viscosity grade such as SAE 5W-30. “Energy-Conserving II” shown in the lower portion, indicates that the oil has fuel-saving capabilities. Oils marked “Energy-Conserving II” will have higher fuel-saving capabilities than oil marked “Energy-Conserving”.

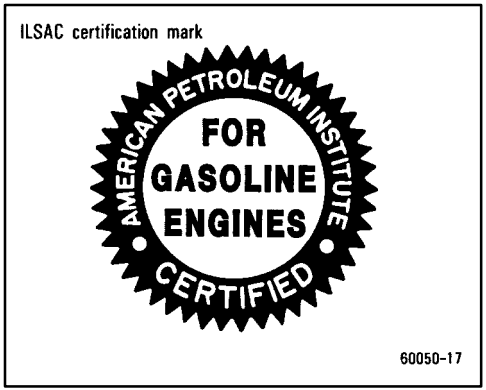

The ILSAC (International Lubricant Standardization and Approval Committee) Certification Mark is displayed on the front of the container.

Checking the engine coolant level

Look at the see-through coolant reservoir when the engine is cold. The coolant level is satisfactory if it is between the "FULL" and "LOW" lines on the reservoir. If the level is low, add ethylene-glycol type coolant.

The coolant level in the reservoir will vary with engine temperature. However, if the level is on or below the "LOW" line, add coolant. Bring the level up to the "FULL" line.

Use only ethylene-glycol type coolant. See information in the next column.

If the coolant level drops within a short time after replenishing, there may be a leak in the system. Visually check the radiator, hoses, radiator cap and drain cock and water pump.

If you can find no leak, have your Toyota dealer test the cap pressure and check for leaks in the cooling system.

CAUTION

To prevent burning yourself, do not remove the radiator cap when the engine is hot.

Coolant type selection

Your coolant must contain ethylene-glycol antifreeze. In addition to preventing freezing and subsequent damage to the engine, this will also prevent corrosion. Further supplemental inhibitors or additives are neither needed nor recommended.

Read the antifreeze container for information on freeze protection. Follow the manufacturer's directions for how much to mix with water. The total capacity of the cooling system is given in Part 8. We recommend 50% solution be used for your Toyota, or a sufficient quantity to provide protection to about -35°C (-31°F).

NOTICE

Do not use alcohol type antifreeze or plain water alone.

Checking brake fluid

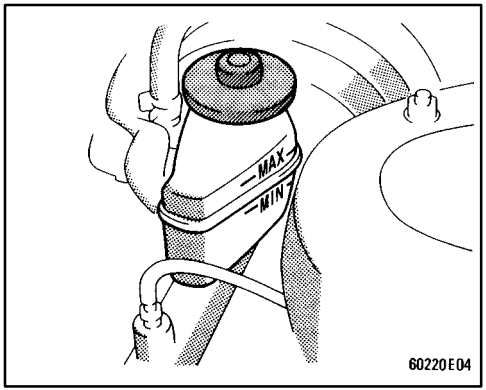

To check the fluid level, simply look at the see-through reservoir. The level should be between the "MAX" and "MIN" lines on the reservoir.

It is normal for the brake fluid level to go down slightly as the brake pads wear. So be sure to keep the reservoir filled.

If the reservoir needs frequent refilling, it may indicate a serious mechanical problem.

If the level is low, add SAE J1703 or FMVSS No. 116 DOT 3 brake fluid to the brake reservoir.

Remove and replace the reservoir covers by hand. Fill the brake fluid to the dotted line. This brings the fluid to the correct level when you put the cover back on.

Use only newly opened brake fluid. Once opened, brake fluid absorbs moisture from the air, and excess moisture can cause a dangerous loss of braking.

CAUTION

Take care when filling the reservoir because brake fluid can harm your eyes and damage painted surfaces. If fluid gets in your eyes, flush your eyes with clean water.

NOTICE

If you spill the fluid, be sure to wash it off with water to prevent it from damaging the parts or paint.

Checking power steering fluid

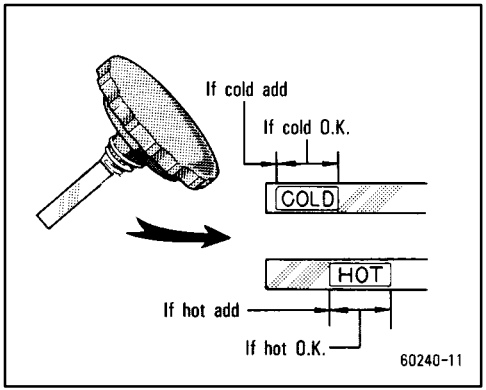

Check the fluid level on the dipstick. If necessary, add automatic transmission fluid DEXRON®-II or-III.

If the vehicle has been driven around 80 km/h (50 mph) for 20 minutes (a little more in frigid temperatures), the fluid is hot (60°C—80°C or 140°F—175°F). You may also check the level when the fluid is cold (about room temperature, 10°C—30°C or 50°F—85°F) if the engine has not been run for about five hours.

a. Clean all dirt from outside of the reservoir tank.

b. Remove the filler cap by turning it counterclockwise and wipe the dipstick clean.

c. Reinstall the filler cap.

d. Remove the filler cap again and look at the fluid level. If the fluid is cold, the level should be in the “COLD” range on the dipstick. Similarly, if it is hot, the fluid level should be in the “HOT” range. If the level is at the low side of either range, add automatic transmission fluid DEXRON®-II or -III to bring the level within the range.

e. After replacing the filler cap, visually check the steering box case, vane pump and hose connections for leaks or damage.

CAUTION

The reservoir tank may be hot so be careful not to burn yourself.

NOTICE

Avoid overfilling, or the power steering could be damaged.

Checking tire pressure

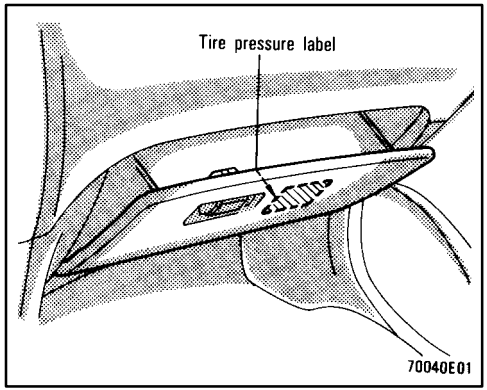

Keep your tire pressures at the proper level.

The recommended cold tire pressures, tire size and the vehicle capacity weight are also given in Part 8. They are also on the tire pressure label inside the glovebox.

You should check the tire pressures every two weeks, or at least once a month. And don't forget the spare!

Incorrect tire pressure can reduce tire life and make your vehicle less safe to drive.

Low tire pressure results in excessive wear, poor handling, reduced fuel economy, and the possibility of blowouts from overheated tires. Also, low tire pressure can cause poor sealing of the tread bead. If the tire pressure is excessively low, there is the possibility of wheel deformation and/or tire separation.

High tire pressure produces a harsh ride, handling problems, excessive wear at the center of the tire tread, and a greater possibility of tire damage from road hazards.

If a tire frequently needs refilling, have it checked by your Toyota dealer.

The following instructions for checking tire pressure should be observed:

- **The pressure should be checked only when the tires are cold.** If your vehicle has been parked for at least 3 hours and has not been driven for more than 1.5 km or 1 mile since, you will get an accurate cold tire pressure reading.
- **Always use a tire pressure gauge.** The appearance of a tire can be misleading. Besides, tire pressures that are even just a few pounds off can degrade handling and ride.
- **Take special care when adding air to the compact spare tire.** The smaller tire size can gain pressure very quickly. Add compressed air in small quantities and check the pressure often until it reaches the specified pressure.
- **Do not bleed or reduce tire pressure after driving.** It is normal for the tire pressure to be higher after driving.
- **Never exceed the vehicle capacity weight.** The passenger and luggage weight should be located so that the vehicle is balanced.
- **Be sure to reinstall the tire inflation valve caps.** Without the valve caps, dirt or moisture could get into the valve core and cause air leakage. If the caps have been lost, have new ones put on as soon as possible.

Checking and replacing tires

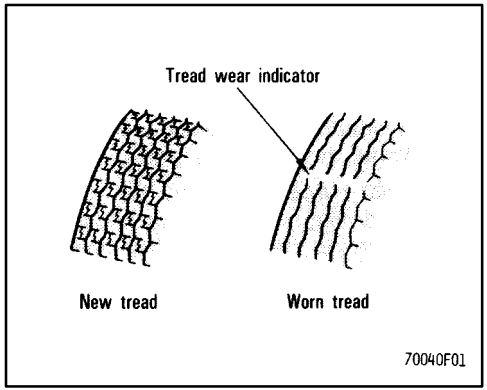

CHECKING YOUR TIRES

Check the tire tread for the tread wear indicators. If the indicators show, replace the tires.

The tires on your Toyota have built-in tread wear indicators to help you know when the tires need replacement. When the tread depth wears to 1.6 mm (0.06 in.) or less, the indicators will appear. If you can see the indicators in two or more adjacent grooves, the tire should be replaced. The lower the tread, the higher the risk of skidding.

The effectiveness of snow tires is lost if the tread wears down below 4 mm (0.16 in.).

Check the tires regularly for damage such as cuts, splits and cracks. If any damage is found, consult with a technician and have the tire repaired or replaced.

Even if the damage does not appear serious, a qualified technician should examine the damage. Objects which have penetrated the tire may have caused internal damage.

Any tires which are over six years old must be checked by a qualified technician even if damage is not obvious.

Tires deteriorate with age even if they have never or seldom been used.

This also applies to the spare tire and tires stored for future use.

REPLACING YOUR TIRES

When replacing a tire, use only the same size and construction as originally installed and with the same or greater load capacity.

Using any other size or type of tire may seriously affect handling, ride, speedometer/odometer calibration, ground clearance, and clearance between the body and tires or snow chains.

CAUTION

- **Do not mix radial, bias belted, or bias-ply tires on your vehicle. It can cause dangerous handling characteristics, resulting in loss of control.**
- **Do not use tires or wheels other than the manufacturer's recommended size.**

Toyota recommends all four tires, or at least both of the front or rear tires be replaced at a time as a set.

See "If you have a flat tire" in Part 4 for tire change procedure.

When a tire is replaced, the wheel should always be balanced.

An unbalanced wheel may affect vehicle handling and tire life. Wheels can get out of balance with regular use and should therefore be balanced occasionally.

When replacing a tubeless tire, the air valve should also be replaced with a new one.

Rotating tires

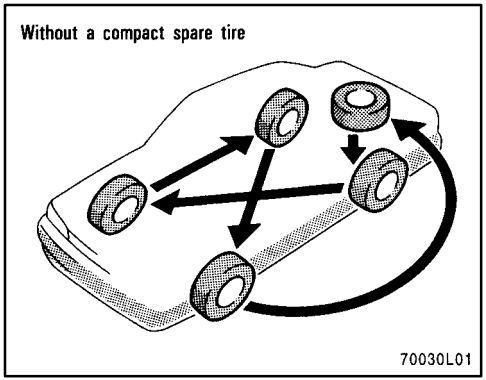

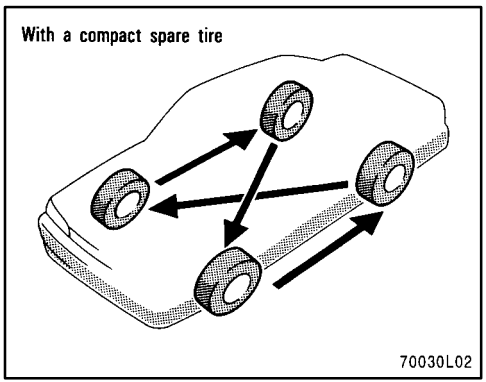

To equalize the wear and help extend tire life, Toyota recommends that you rotate your tires every 12000 km (7500 miles). However, the most appropriate timing for tire rotation may vary according to your driving habits and road surface conditions.

See “If you have a flat tire” in Part 4 for tire change procedure.

When rotating tires, check for uneven wear and damage. Abnormal wear is usually caused by incorrect tire pressure, improper wheel alignment, out-of-balance wheels, or severe braking.

CAUTION

Do not include a compact spare tire when rotating the tires. It is designed for temporary use only.

Installing snow tires and chains

WHEN TO USE SNOW TIRES OR CHAINS

Snow tires or chains are recommended when driving on snow or ice.

On wet or dry roads, conventional tires provide better traction than snow tires.

SNOW TIRE SELECTION

If you need snow tires, select the same size, construction and load capacity as the original tires on your Toyota.

Do not use tires other than those mentioned above. Do not install studded tires without first checking local regulations for possible restrictions.

SNOW TIRE INSTALLATION

Snow tires should be installed on all wheels.

Installing snow tires on the front wheels only can lead to an excessive difference in road grip capability between the front and rear tires which would cause loss of vehicle control.

When storing removed tires, you should store them in a cool dry place.

Mark the direction of rotation and be sure to install them in the same direction when replacing.

CAUTION

- **Do not drive with the snow tires incorrectly inflated.**
- **Never drive over 120 km/h (75 mph) with any type of snow tires.**

TIRE CHAIN SELECTION

Use the tire chains of correct size and type.

Use SAE Class “S” type radial tire chains except radial cable chains or V-bar type chains.

Regulations regarding the use of tire chains vary according to location or type of road, so always check them before installing chains.

CHAIN INSTALLATION

Install the chains on the front tires as tightly as possible. Do not use tire chains on the rear tires. Retighten chains after driving 0.5—1.0 km (1/4—1/2 mile).

When installing chains on your tires, carefully follow the instructions of the chain manufacturer.

If wheel covers are used, they will be scratched by the chain band, so remove the covers before putting on the chains.

CAUTION

- **Do not exceed 50 km/h (30 mph) or the chain manufacturer’s recommended speed limit, whichever is lower.**
- **Drive carefully avoiding bumps, holes, and sharp turns, which may cause the vehicle to bounce.**
- **Avoid sharp turns or locked-wheel braking, as use of chains may adversely affect vehicle handling.**

NOTICE

Do not attempt to use a tire chain on the compact spare tire, as it may result in damage to the vehicle as well as the tire.

Replacing wheels

WHEN TO REPLACE YOUR WHEELS

If you have wheel damage such as bending, cracks or heavy corrosion, the wheel should be replaced.

If you fail to replace damaged wheels, the tire may slip off the wheel or they may cause loss of handling control.

WHEEL SELECTION

When replacing wheels, care should be taken to ensure that the wheels are replaced by ones with the same load capacity, diameter, rim width, and offset.

This must be observed on compact spare tires, too.

Correct replacement wheels are available at your Toyota dealer.

A wheel of a different size or type may adversely affect handling, wheel and bearing life, brake cooling, speedometer/odometer calibration, stopping ability, headlight aim, bumper height, vehicle ground clearance, and tire or snow chain clearance to the body and chassis.

Replacement with used wheels is not recommended as they may have been subjected to rough treatment or high mileage and could fail without warning. Also, bent wheels which have been straightened may have structural damage and therefore should not be used. Never use an inner tube in a leaking wheel which is designed for a tubeless tire.

Aluminum wheel precautions

- After driving your vehicle the first 1600 km (1000 miles), check that the wheel nuts are tight.
- If you have rotated, repaired, or changed your tires, check that the wheel nuts are still tight after driving 1600 km (1000 miles).
- When using tire chains, be careful not to damage the aluminum wheels.
- Use only the Toyota wheel nuts and wrench designed for your aluminum wheels.
- When balancing your wheels, use only Toyota balance weights or equivalent and a plastic or rubber hammer.
- As with any wheel, periodically check your aluminum wheels for damage. If damaged, replace immediately.

Part 7

DO-IT-YOURSELF MAINTENANCE—

Chapter 7-3

Electrical components

- Checking battery condition
- Battery recharging precautions
- Checking and replacing fuses
- Adding washer fluid
- Replacing light bulbs

Checking battery condition——Precautions

CAUTION

BATTERY PRECAUTIONS

The battery produces flammable and explosive hydrogen gas.

- **Do not cause a spark from the battery with tools.**
- **Do not smoke or light a match near the battery.**

The electrolyte contains poisonous and corrosive sulfuric acid.

- **Avoid contact with eyes, skin or clothes.**
- **Never ingest electrolyte.**
- **Wear protective safety glasses when working near the battery.**
- **Keep children away from the battery.**

EMERGENCY MEASURES

- **If electrolyte gets in your eyes, flush your eyes with clean water for at least 15 minutes and get immediate medical attention. If possible, continue to apply water with a sponge or cloth while en route to the medical office.**
- **If electrolyte gets on your skin, thoroughly wash the contact area. If you feel pain or burning, get medical attention immediately.**
- **If electrolyte gets on your clothes, there is a possibility of its soaking through to your skin, so immediately take off the exposed clothing and follow the procedure above, if necessary.**
- **If you happen to swallow electrolyte, drink a large quantity of water or milk. Follow with milk of magnesia, beaten raw egg or vegetable oil. Then go immediately for emergency help.**

—Checking battery exterior

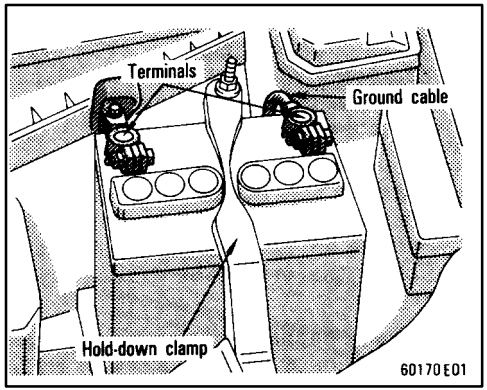

Check the battery for corroded or loose terminal connections, cracks, or loose hold-down clamp.

a. If the battery is corroded, wash it off with a solution of warm water and baking soda. Coat the outside of the terminals with grease to prevent further corrosion.

b. If the terminal connections are loose, tighten their clamp nuts—but do not overtighten.

c. Tighten the hold-down clamp only enough to keep the battery firmly in place. Overtightening may damage the battery case.

NOTICE

- ***Be sure the engine and all accessories are off before performing maintenance.***
- ***When checking the battery, remove the ground cable from the negative terminal ("-" mark) first and reinstall it last.***
- ***Be careful not to cause a short circuit with tools.***
- ***Take care no solution gets into the battery when washing it.***

—Checking battery fluid

There are two types of batteries: maintenance type and non-maintenance type.

A non-maintenance battery has "MAINTENANCE FREE BATTERY" on its top. A maintenance type battery does not have such indication.

Maintenance type battery—

Check the fluid condition by the fluid level lines on the side of the battery. Or if the battery has a hydrometer on its top, you can also check the hydrometer.

Non-maintenance battery—

Check the battery condition by the hydrometer on the top of the battery.

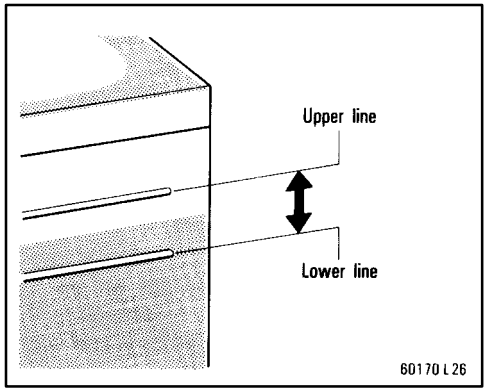

CHECKING BY THE FLUID LEVEL LINES (MAINTENANCE TYPE BATTERY ONLY)

The fluid (electrolyte) level must be between the upper and lower lines.

When checking the fluid level, look at all six cells, not just one or two.

If the level is lower than the lower line, add distilled water. (See “ADDING DISTILLED WATER”.)

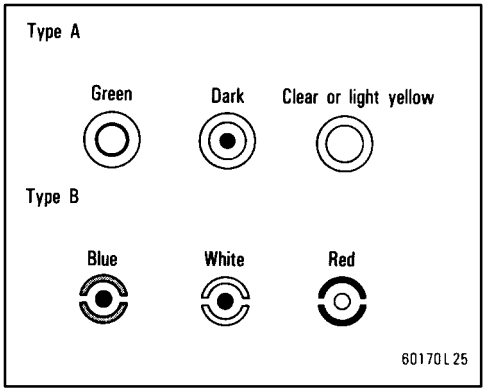

CHECKING BY THE HYDROMETER

Check the battery condition by the hydrometer color.

Maintenance type battery

Hydrometer color		Condition
Type A	Type B	
GREEN	BLUE	Good
DARK	WHITE	Charging necessary. Have battery checked by your Toyota dealer.
CLEAR or LIGHT YELLOW	RED	Add distilled water*

*: See “ADDING DISTILLED WATER”.

Non-maintenance battery

Hydrometer color		Condition
Type A	Type B	
GREEN	BLUE	Good
DARK	WHITE	Charging necessary. Have battery checked by your Toyota dealer.
CLEAR or LIGHT YELLOW	RED	Have battery checked by your Toyota dealer.

NOTICE

Do not refill the battery with water.

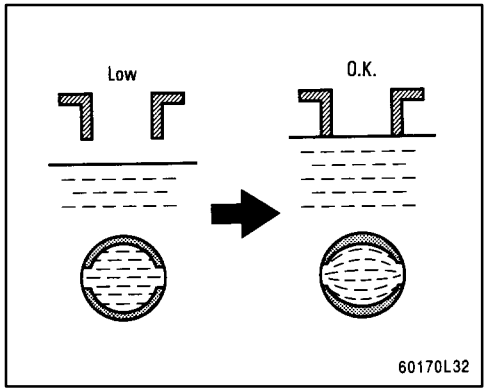

ADDING DISTILLED WATER (MAINTENANCE TYPE BATTERY ONLY)

1. Remove the vent plugs.
2. Add distilled water to cells needing fluid.

If the side of your battery is covered, check the water level by looking down directly above the cell as illustrated above.

3. Retighten the vent plugs securely.

NOTICE

Do not overfill the cells. Excess electrolyte could squirt out of the battery during heavy charging, causing corrosion or damage.

Battery recharging precautions

During recharging, the battery is producing hydrogen gas.

Therefore, before recharging:

1. Maintenance type batteries—Remove the vent plugs.
2. If recharging with the battery installed on the vehicle, be sure to disconnect the ground cable.
3. Be sure the power switch on the recharger is off when connecting the charger cables to the battery and when disconnecting them.

CAUTION

- **Always charge the battery in an unconfined area. Do not charge the battery in a garage or closed room where there is not sufficient ventilation.**
- **Non-maintenance batteries: Only do a slow charge (5A or less). Charging at a quicker rate is dangerous. The battery may explode, causing personal injuries.**

Maintenance type batteries: Be sure to remove the vent plugs before recharging.

NOTICE

Never recharge the battery while the engine is running. Also, be sure all accessories are turned off.

Checking and replacing fuses

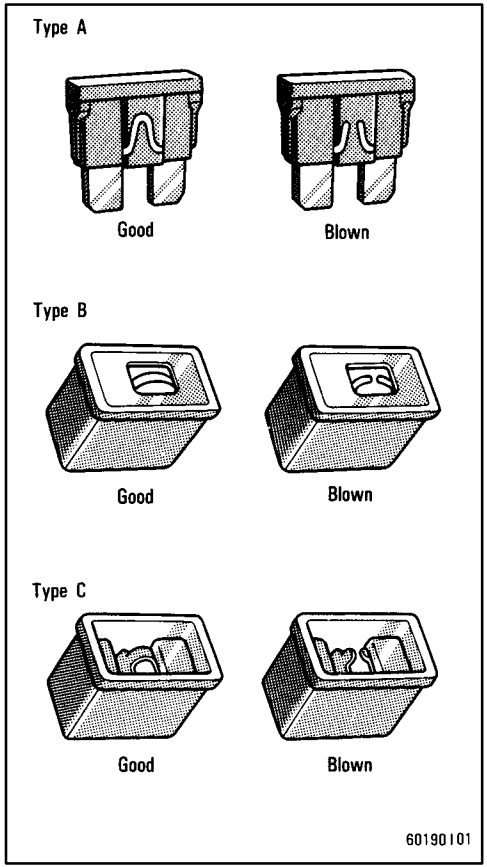

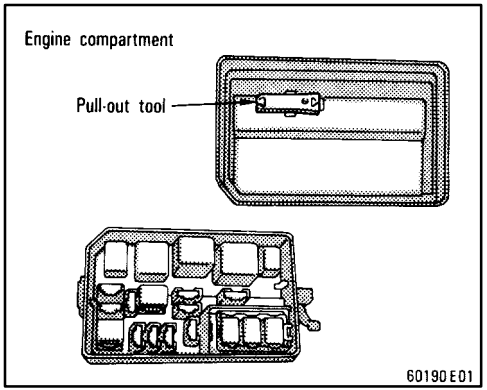

If the headlights or other electrical components do not work, check the fuses. If any of the fuses are blown, they must be replaced.

See “Fuse locations” in Chapter 7-1 for locations of the fuses.

Turn the ignition switch and inoperative component off. Pull a suspected fuse straight out and check it.

Determine which fuse may be causing the problem. The lid of the fuse box shows the name of the circuit for each fuse. See Part 8 of this manual for the functions controlled by each circuit.

Type A fuses can be pulled out by the pull-out tool.

If you are not sure whether the fuse has blown, try replacing the suspected fuse with one that you know is good.

If the fuse has blown, push a new fuse into the clip.

Only install a fuse with the amperage rating designated on the fuse box lid.

If you do not have a spare fuse, in an emergency you can pull out the “CIG & RADIO”, “DOME” or “A/C” fuse, which may be dispensable for normal driving, and use it if its amperage rating is the same.

If you cannot use one of the same amperage, use one that is lower, but as close as possible to the rating. If the amperage is lower than that specified, the fuse might blow out again but this does not indicate anything wrong. Be sure to get the correct fuse as soon as possible and return the substitute to its original clip.

It is a good idea to purchase a set of spare fuses and keep them in your vehicle for emergencies.

If the new fuse immediately blows out, there is a problem with the electrical system. Have your Toyota dealer correct it as soon as possible.

CAUTION

Never use a fuse with a higher amperage rating, or any other object, in place of a fuse. This may cause extensive damage and possibly a fire.

Adding washer fluid

If any washer does not work, the washer tank may be empty. Add washer fluid.

You may use plain water as washer fluid. However, in cold areas where temperatures range below freezing point, use washer fluid containing antifreeze. This product is available at your Toyota dealer and most auto parts stores. Follow the manufacturer's directions for how much to mix with water.

NOTICE

Do not use engine antifreeze or any other substitute because it may damage your vehicle's paint.

Replacing light bulbs—

The following illustrations show how to gain access to the bulbs. When replacing a bulb, make sure the ignition switch and light switch are off. Use bulbs with the wattage ratings given in the table.

CAUTION

Halogen bulbs have pressurized gas inside and require special handling. They can burst or shatter if scratched or dropped. Hold a bulb only by its plastic or metal case. Do not touch the glass part of a bulb with bare hands.

NOTICE

Only use a bulb of the listed type.

Light Bulbs	Bulb No.	W	Type
Headlight (inner bulb)	9005	65	A
Headlights (outer bulb)	9006	55	B
Parking and front side marker lights	194	3.8	D
Front turn signal lights	1156	27	C

—Headlights

Light Bulbs	Bulb No.	W	Type
Rear turn signal lights	1156	27	C
Stop and tail lights	1157	27/8	C
Rear side marker, stop and tail lights	1157	27/8	C
Back-up lights	1156	27	C
High mounted stop light			
Sedan	—	18	D
Wagon*	—	21	C
	1156	27	C
License plate lights	—	5	D
Interior light	—	8	E
Personal light	—	10	C
Luggage compartment light	—	5	E
Trunk light	194	3.8	D

A: HB3 halogen bulbs
B: HB4 halogen bulbs
C: Single end bulbs
D: Wedge base bulbs
E: Double end bulbs
*: You may use either a 21 W or 27 W bulb.

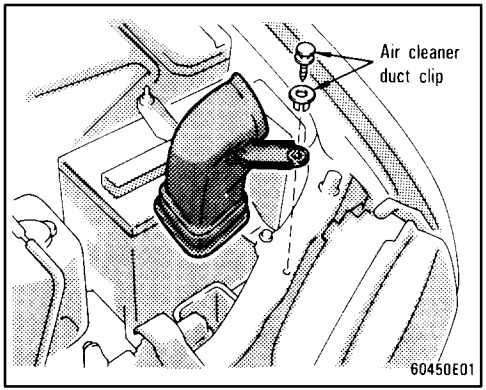

1. Open the hood.
LEFT SIDE HEADLIGHT: Remove the clip and take out the air cleaner duct.

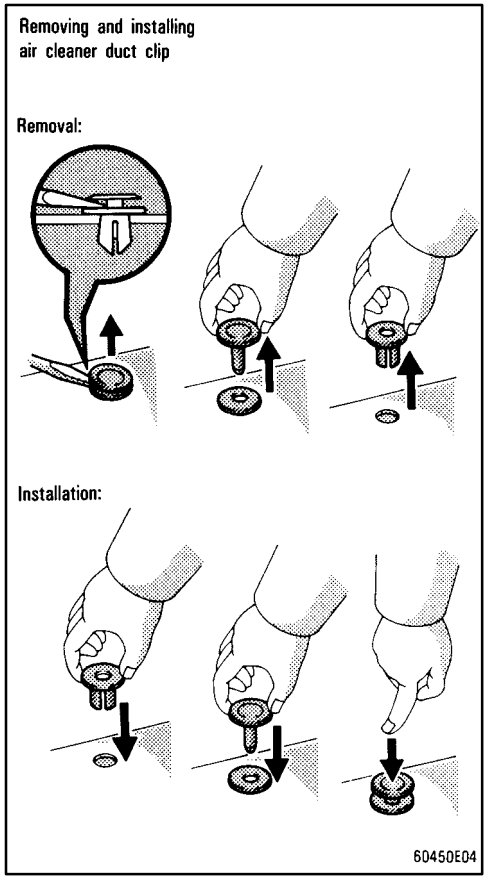

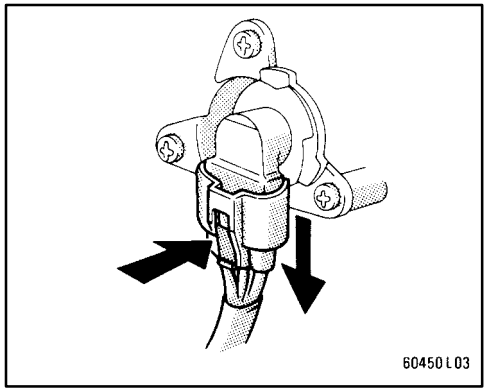

2. Unplug the connector while depressing the lock release.
If the connector is tight, wiggle it.

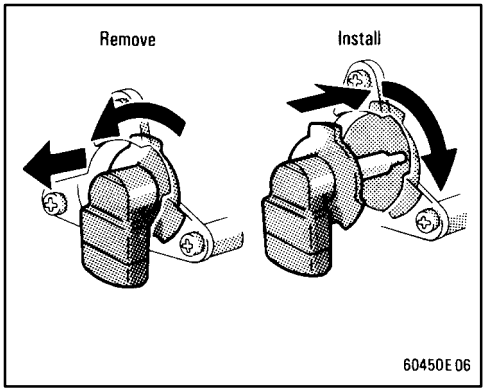

3. Turn the bulb and remove it. Install the new bulb and install the connector.
To install a bulb, align the tabs of the bulb socket with the cutouts of the mounting hole.

Aiming is not necessary after replacing the bulb. When aiming adjustment is necessary, contact your Toyota dealer.

—Parking and front side marker lights

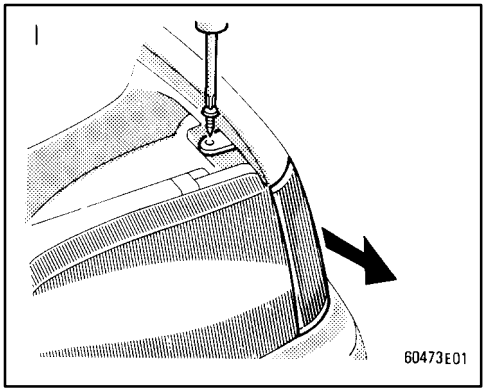

Use a Phillips-head screwdriver.

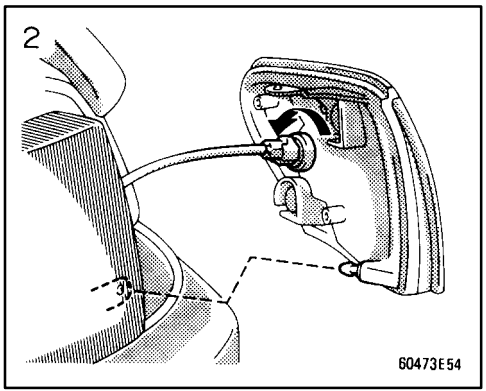

—Front turn signal lights

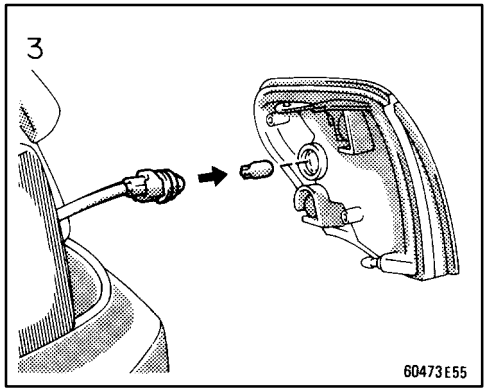

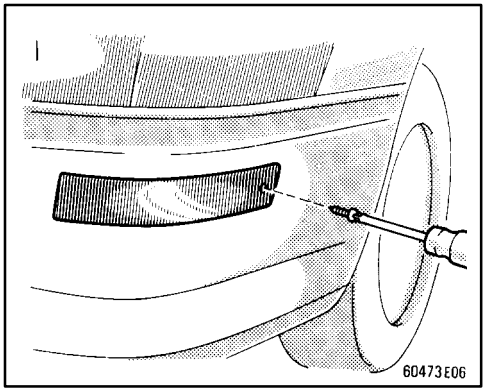

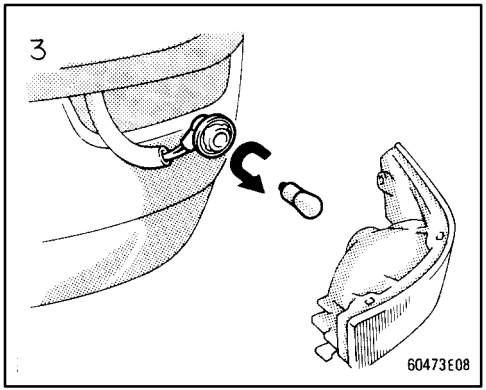

Use a Phillips-head screwdriver.

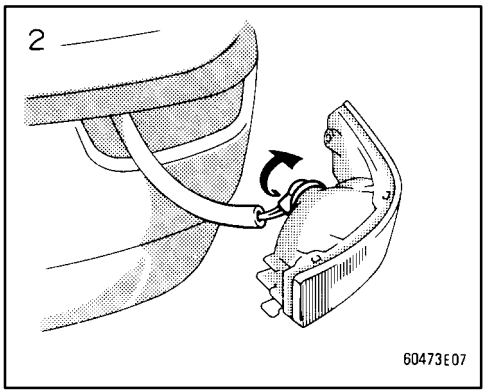

—Rear turn signal, stop and tail, rear side marker, and back-up lights (sedan)

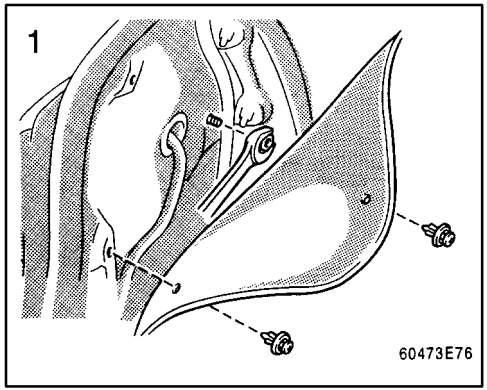

Use a wrench.

Remove and install the cover clips as shown in the following illustrations.

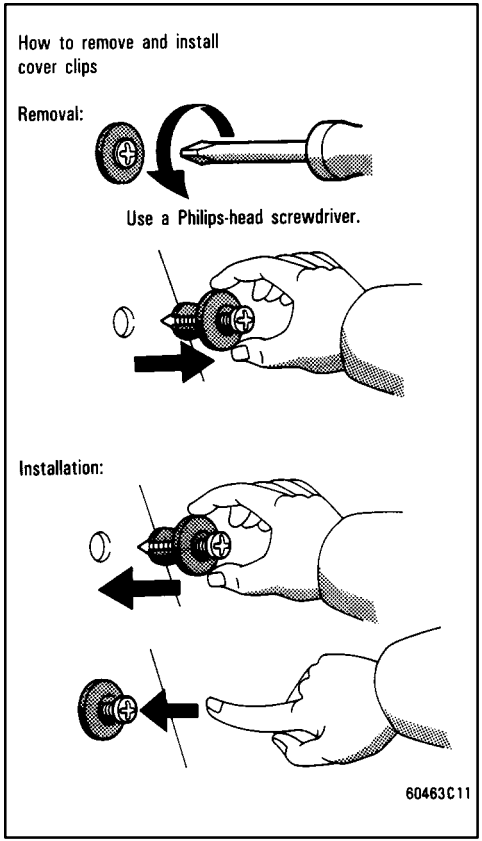

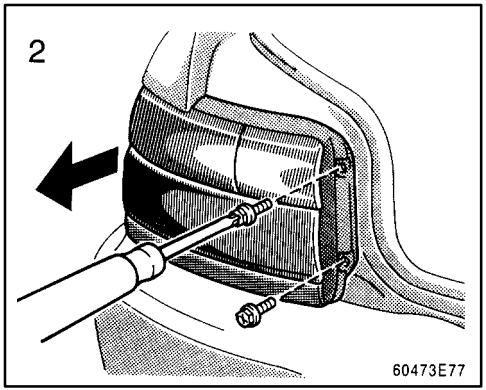

Use a Phillips-head screwdriver.

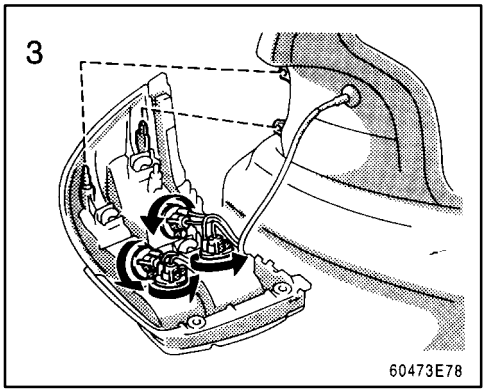

—Rear turn signal, stop and tail, rear side marker, and back-up lights (wagon)

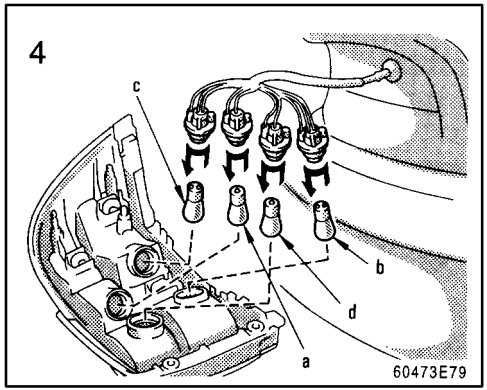

a: Rear turn signal light
b: Stop and tail light
c: Rear side marker, stop and tail light
d: Back-up light

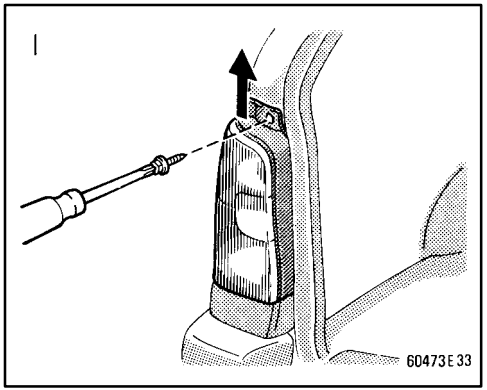

Use a Phillips-head screwdriver.

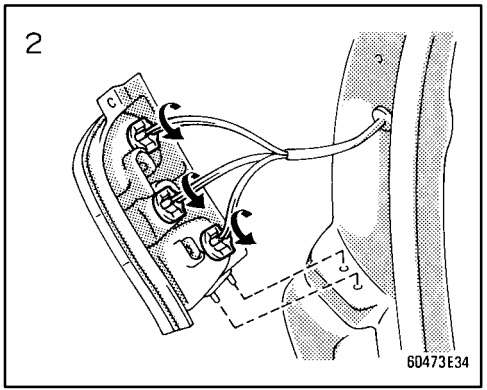

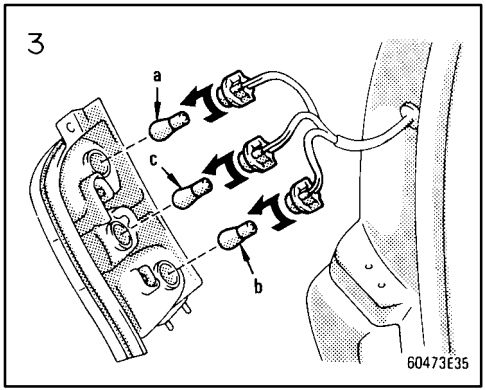

a: Rear turn signal light
b: Rear side marker, stop and tail light
c: Back-up light

—High mounted stoplight (sedan)

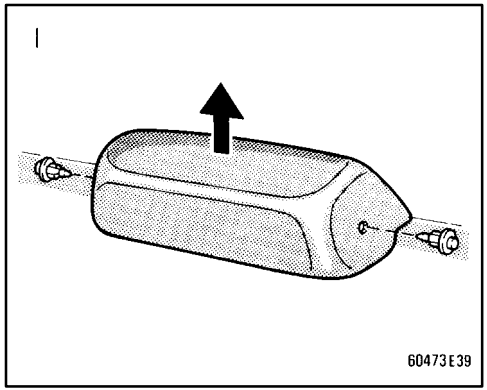

Remove and install the cover clips as shown in the following illustrations.

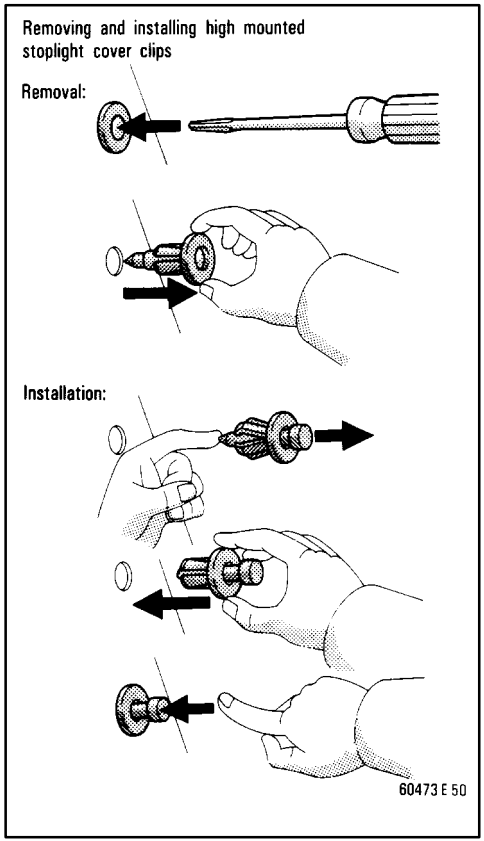

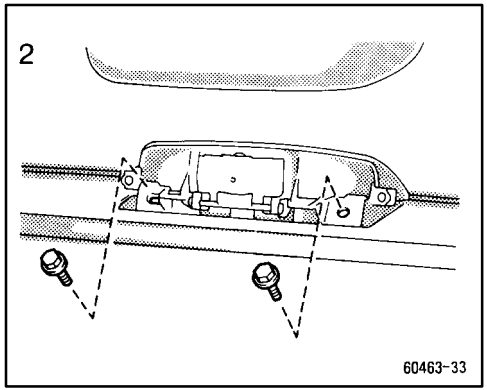

Remove the bolts.

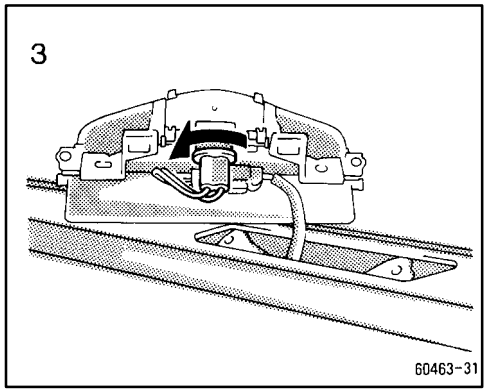

—High mounted stoplight (wagon)

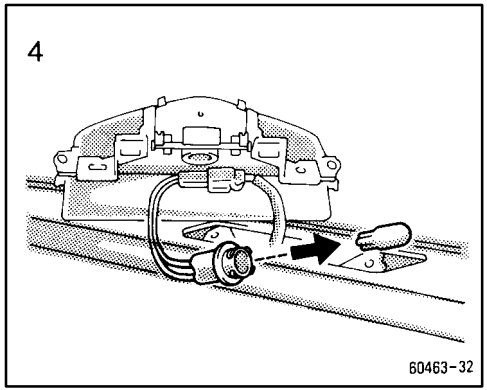

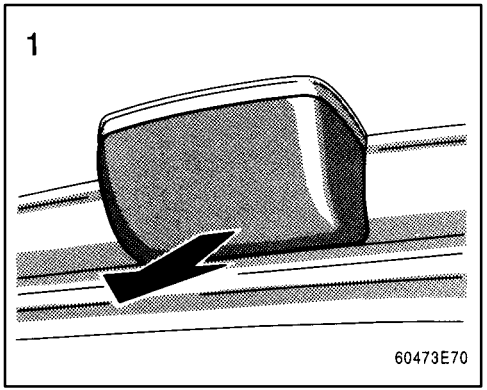

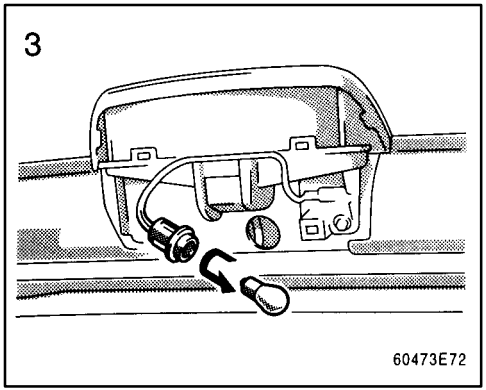

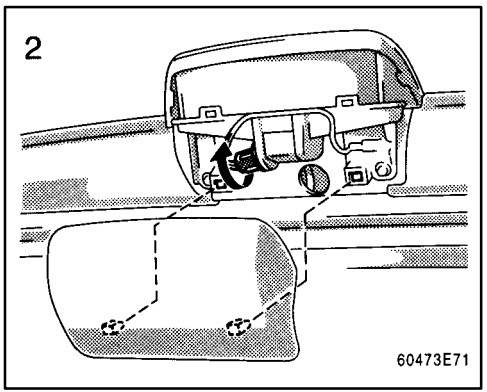

—License plate lights (sedan)

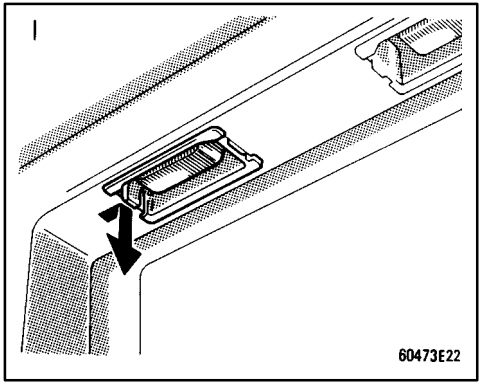

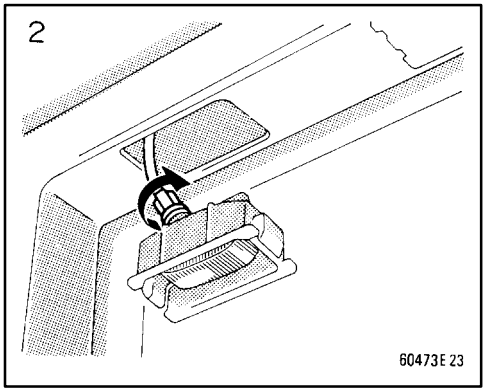

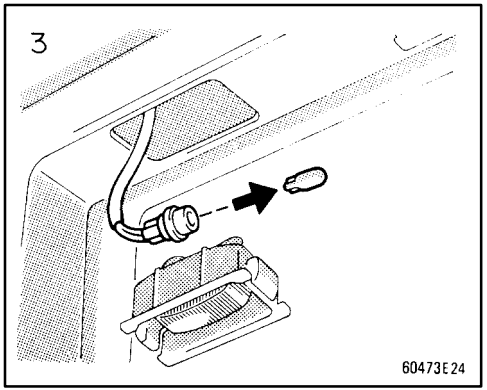

—License plate lights (wagon)

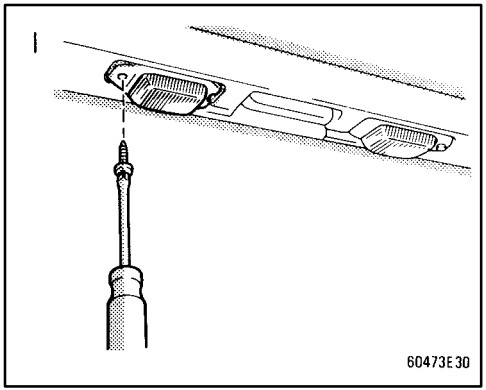

Use a Phillips-head screwdriver.

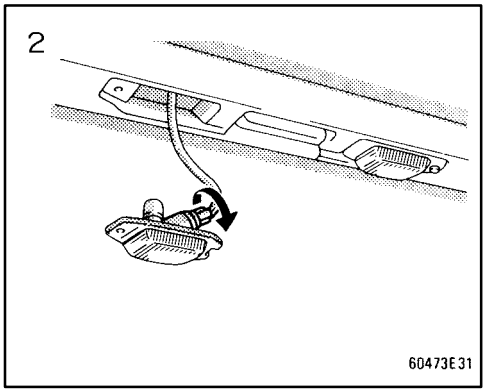

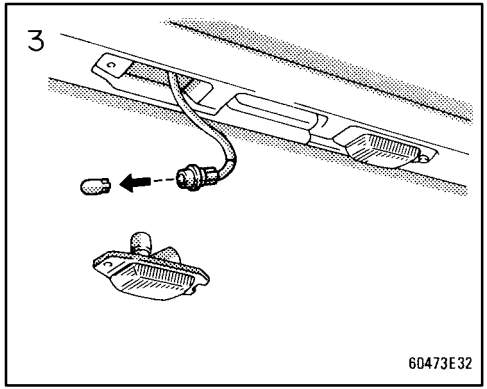
3
60473E32

Part 8
SPECIFICATIONS

- Dimensions and weight
- Engine
- Fuel
- Service specifications
- Tires
- Fuses

Dimensions and weight

		Sedan		Wagon	
Overall length	mm (in.)	4370	(172.0)	4370	(172.0)
Overall width	mm (in.)	1685	(66.3)	1685	(66.3)
Overall height	mm (in.)	1360	(53.5)*1	1405	(55.3)*1
	mm (in.)	1380	(54.3)*2	1425	(56.1)*2
Wheelbase	mm (in.)	2465	(97.0)	2465	(97.0)
Front tread	mm (in.)	1460	(57.5)	1460	(57.5)
Rear tread	mm (in.)	1450	(57.1)	1450	(57.1)
Vehicle capacity weight (occupants + luggage)	kg (lb.)	385	(850)	385	(850)

*1: Unladen vehicle plus two occupants

*2: Unladen vehicle

Engine

Model:

4A-FE and 7A-FE

Type:

4 cylinder in line, 4 cycle, gasoline

Bore and stroke, mm (in.):

4A-FE engine

81.0 x 77.0 (3.19 x 3.03)

7A-FE engine

81.0 x 85.5 (3.19 x 3.37)

Displacement, cm^3 (cu. in.):

4A-FE engine	1587	(96.8)
7A-FE engine	1762	(107.5)

Fuel

Fuel type:

Unleaded fuel, Research Octane Number 91 (Octane Rating 87) or higher

Fuel tank capacity, L (gal., Imp. gal.):

50 (13.2, 11.0)

Service specifications

ENGINE

Valve clearance (engine cold), mm (in.):

Intake	0.15—0.25 (0.006—0.010)
Exhaust	0.25—0.35 (0.010—0.014)

Spark plug type:

NIPPONDENSO	K16R-U
NGK	BKR5EYA

Spark plug gap, mm (in.):

0.8 (0.031)

Drive belt tension measured with Borroughs drive belt tension gauge No. BT-33-73F (used belt), lbf:

Generator belt	115 ± 20
Air conditioning compressor belt	100 ± 20
Power steering pump belt	80 ± 20

ENGINE LUBRICATION

Oil capacity (drain and refill), L (qt., Imp. qt.):

4A-FE engine		
	With filter	3.0 (3.2, 2.6)
	Without filter	2.8 (3.0, 2.5)
7A-FE engine		
	With filter	3.7 (3.9, 3.3)
	Without filter	3.5 (3.7, 3.1)

Oil grade:

API SH, “Energy-Conserving II” multi-grade engine oil or ILSAC multigrade engine oil is recommended.

Recommended oil viscosity (SAE):

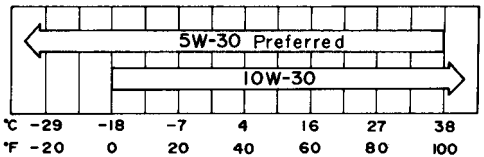

Temperature range anticipated before next oil change

80040-L03U

COOLING SYSTEM

Total capacity, L (qt., Imp. qt.):

4A-FE engine

NIPPONDENSO RADIATOR

Manual transmission	5.3 (5.6, 4.7)
Automatic transmission	5.9 (6.2, 5.2)

HARRISON RADIATOR

Manual transmission	6.0 (6.3, 5.3)
Automatic transmission	5.9 (6.2, 5.2)

7A-FE engine

NIPPONDENSO RADIATOR

Manual transmission	5.5 (5.8, 4.8)
Automatic transmission	6.2 (6.6, 5.5)

HARRISON RADIATOR

Manual transmission	6.2 (6.6, 5.5)
Automatic transmission	6.1 (6.4, 5.4)

Coolant type:

With ethylene-glycol antifreeze (Do not use alcohol type.)

BATTERY

—Maintenance type battery

Specific gravity reading at 20°C (68°F):

1.260	Fully charged
1.160	Half charged
1.060	Discharged

—Non-maintenance battery

Open voltage* at 20°C (68°F):

12.7 V	Fully charged
12.3 V	Half charged
11.9 V	Discharged

*: Voltage that is checked 20 minutes after the key is removed with all the lights turned off

Charging rates:

Non-maintenance battery

5 A max

Maintenance type battery

Quick charge	15 A max
Slow charge	5 A max

CLUTCH

Pedal freeplay, mm (in.):

5—15 (0.2—0.6)

Fluid type:

SAE J1703 or FMVSS No. 116 DOT 3

MANUAL TRANSAXLE

Oil capacity, L (qt., Imp. qt.):

1.9 (2.0, 1.7)

Oil type:

Multipurpose gear oil API GL-4 or GL-5

Recommended oil viscosity:

SAE 75W-90

AUTOMATIC TRANSAXLE

(4-speed type)

Fluid capacity (drain and refill), L (qt., Imp. qt.):

Up to 3.1 (3.3, 2.7)

Fluid type:

Automatic transmission fluid DII or DEXRON® III (DEXRON® II)

AUTOMATIC TRANSMISSON

(3-speed type)

Fluid capacity (drain and refill), L (qt., Imp. qt.):

Up to 2.5 (2.6, 2.2)

Fluid type:

Automatic transmission fluid D II or DEXRON® III (DEXRON® II)

DIFFERENTIAL

(3- speed type automatic transmission)

Fluid capacity, L (qt., Imp. qt.):

1.4 (1.5, 1.2)

Fluid type:

Automatic transmission fluid DEXRON®II

BRAKES

Minimum pedal clearance when depressed, with the pressure of 490 N (50 kgf, 110 lbf) with the engine running, mm (in.):

70 (2.8)

Pedal freeplay, mm (in.):

1—6 (0.04—0.24)

Pad wear limit, mm (in.):

1.0 (0.04)

Lining wear limit, mm (in.):

1.0 (0.04)

Parking brake adjustment when pulled with the force of 196 N (20 kgf, 44 lbf):

4—7 clicks

Fluid type:

SAE J1703 or FMVSS No. 116 DOT 3

STEERING

Wheel freeplay:

Less than 30 mm (1.2 in.)

Power steering fluid type:

Automatic transmission fluid DEXRON®-II or-III

Tires

Tire size:

Spare tire

T115/70D14
T135/70D15
175/65R14 82S
P175/65R14 81S
185/65R14 85S
185/65R14 86S
P185/65R14 85S

Except spare tire

175/65R14 82S
P175/65R14 81S
185/65R14 85S
185/65R14 86S
P185/65R14 85S

Tire pressure, kPa (kgf/cm^2 or bar, psi):

T115/70D14	420 (4.2, 60)
T115/70D15	420 (4.2, 60)
175/65R14 82S	210 (2.1, 30)
P175/65R14 81S	210 (2.1, 30)
185/65R14 85S	210 (2.1, 30)
185/65R14 86S	210 (2.1, 30)
P185/65R14 85S	210 (2.1, 30)

Wheel size:

T115/70D14	14 x 4T
T135/70D15	15 x 4T
Other tires	14 x 5.5J
	14 x 5.5JJ

Wheel nut torque, N·m (kgf·m, ft·lbf):

103 (10.5, 76)

Fuses

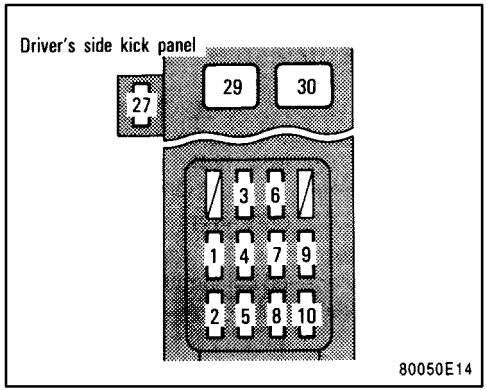

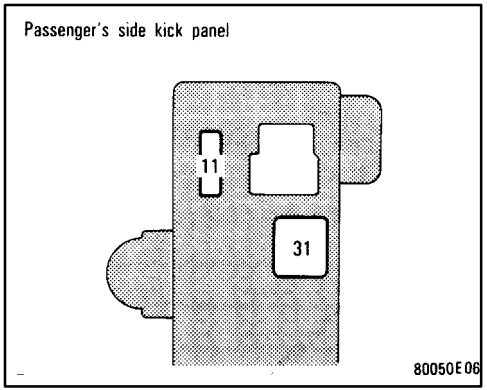

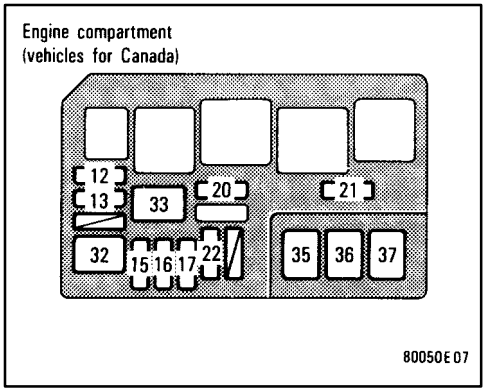

Fuses (type A)

1. CIG & RADIO 20 A: Cigarette lighter, digital clock display, air conditioning system, radio, cassette tape player, power rear view mirrors, automatic transmission shift lock system, theft deterrent system, SRS airbags

2. TAIL 15 A: Tail lights, parking lights, license plate lights, instrument panel lights, daytime running light system

3. IGN 10 A: Multiport fuel injection system/sequential multiport fuel injection system, discharge warning light, SRS airbags

4. ECU-B 10 A: Daytime running light system, cruise control system

5. DEF-I/UP 7.5 A: Multiport fuel injection system/sequential multiport fuel injection system

6. STOP 15 A: Stop lights, high mounted stoplight, cruise control system, automatic transmission shift lock system, anti-lock brake system

7. TURN 7.5 A: Turn signal lights

8. ECU-IG 15 A: Starting system, anti-lock brake system, automatic transmission shift lock system

9. GAUGE 10 A: Gauges and meters, service reminder indicators (except discharge and open door warning lights), back-up light, air conditioning system, daytime running light system, electronically controlled automatic transmission system

10. WIP 20 A: Windshield wipers and washer, rear window wiper and washer

11. A/C 15 A: Air conditioning system

12. DOME 20 A: Interior light, luggage compartment light, trunk light, clock, open door warning light, radio, cassette tape player, anti-lock brake system, theft deterrent system, electric sun roof

13. HAZ-HORN 20 A: Emergency flashers, horns

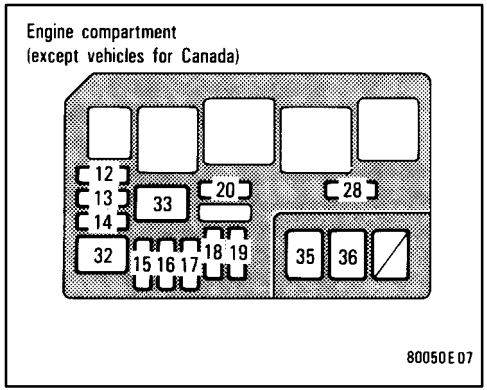

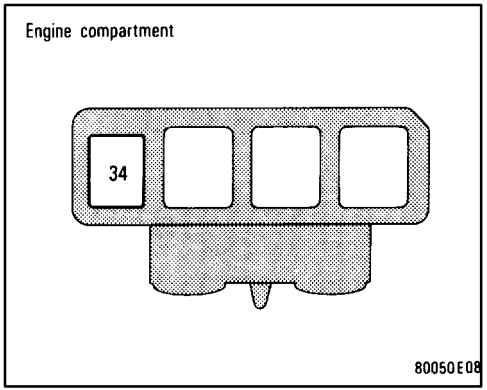

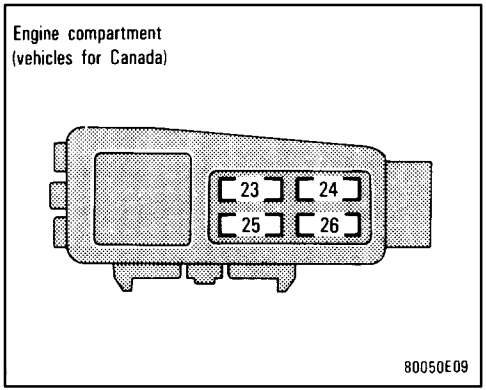

14. FAN-I/UP 7.5 A: Multiport fuel injection system/sequential multiport fuel injection system

15. SPARE 7.5 A: Spare fuse

16. SPARE 15 A: Spare fuse

17. SPARE 20 A: Spare fuse

18. HEAD (RH) 15 A: Right-hand headlight

19. HEAD (LH) 15 A: Left-hand headlight

20. ALT-S 7.5 A: Charging system

21. EFI, F-HTR 15 A: Multiport fuel injection system/sequential multiport fuel injection system, electronically controlled automatic transmission system

22. DRL 7.5 A: Daytime running light system

23. HEAD (LH-UPR) 10 A: Left-hand headlight (high beam)

24. HEAD (LH-LWR) 10 A: Left-hand headlight (low beam)

25. HEAD (RH-UPR) 10 A: Right-hand headlight (high beam)

26. HEAD (RH-LWR) 10 A: Right-hand headlight (low beam)

27. OBD 7.5 A: On-board diagnosis system

28. EFI 15 A: Multiport fuel injection system/sequential multiport fuel injection system, electronically controlled automatic transmission system

Fuses (type B)

29. POWER 30 A: Power windows, power door lock system, electric sun roof

30. DEF 30 A: Rear window defogger

31. HEATER 40 A: Air conditioning system

32. AM 2 30 A: Starting system and “IGN” fuse

33. FAN 30 A: Electric cooling fan and “FAN-I/UP” fuse

34. CDS 30 A: Electric cooling fan

Fuses (type C)

35. AM1 40 A: “CIG & RADIO”, “GAUGE”, “TURN”, “ECU-IG”, “WIP”, “DEF” and “OBD” fuses

36. ALT 100 A: Tail lights, “DEF”, “STOP”, “ECU-B” and “AM 1” fuses

37. ABS 50 A: Anti-lock brake system

Part 9

REPORTING SAFETY DEFECTS FOR U.S. OWNERS AND UNIFORM TIRE QUALITY GRADING

- Reporting safety defects for U.S. owners
- Uniform tire quality grading

Reporting safety defects for U.S. owners

If you believe that your vehicle has a defect which could cause a crash or could cause injury or death, you should immediately inform the National Highway Traffic Safety Administration (NHTSA) in addition to notifying Toyota Motor Sales, U.S.A., Inc. (Toll-free: 1-800-331-4331).

If NHTSA receives similar complaints, it may open an investigation, and if it finds that a safety defect exists in a group of vehicles, it may order a recall and remedy campaign. However, NHTSA cannot become involved in individual problems between you, your dealer, or Toyota Motor Sales, U.S.A., Inc.

To contact NHTSA, you may either call the Auto Safety Hotline toll-free at 1-800-424-9393 (or 366-0123 in Washington D.C. area) or write to: NHTSA. U.S. Department of Transportation. Washington D.C. 20590. You can also obtain other information about motor vehicle safety from the Hotline.

Uniform tire quality grading

This consumer information has been prepared in accordance with regulations issued by the National Highway Traffic Safety Administration of the U.S. Department of Transportation. It provides the purchasers and/or prospective purchasers of Toyota vehicles with information on uniform tire quality grading.

Your Toyota dealer will help answer any questions you may have as you read this information.

DOT quality grades—All passenger vehicle tires must conform to Federal Safety Requirements in addition to these grades. These quality grades are molded on the sidewall.

Treadwear—The treadwear grade is a comparative rating based on the wear rate of the tire when tested under controlled conditions on a specified government test course. For example, a tire graded 150 would wear one and a half (1-1/2) times as well on the government course as a tire graded 100. The relative performance of tires depends upon the actual conditions of their use, however, and may depart significantly from the norm due to variations in driving habits, service practices and differences in road characteristics and climate.

Traction A, B, C—The traction grades, from highest to lowest, are A, B, and C, and they represent the tire's ability to stop on wet pavement as measured under controlled conditions on specified government test surfaces of asphalt and concrete. A tire marked C may have poor traction performance.

Warning: The traction grade assigned to this tire is based on braking (straight ahead) traction tests and does not include cornering (turning) traction.

Temperature A, B, C—The temperature grades are A (the highest), B, and C, representing the tire's resistance to the generation of heat and its ability to dissipate heat when tested under controlled conditions on a specified indoor laboratory test wheel. Sustained high temperature can cause the material of the tire to degenerate and reduce tire life, and excessive temperature can lead to sudden tire failure. The grade C corresponds to a level of performance which all passenger car tires must meet under the Federal Motor Vehicle Safety Standard No. 109. Grades B and A represent higher levels of performance on the laboratory test wheel than the minimum required by law.

Warning: The temperature grade for this tire is established for a tire that is properly inflated and not overloaded. Excessive speed, underinflation, or excessive loading, either separately or in combination, can cause heat buildup and possible tire failure.