Foreword

The inside pages of this manual contain a minimum of 50% recycled fibers, including 10% post-consumer fibers.

Welcome to the growing family of new NISSAN owners. This vehicle is delivered to you with confidence. It was produced using the latest techniques and strict quality control.

This manual was prepared to help you understand the operation and maintenance of your vehicle so that you may enjoy many miles of driving pleasure. Please read through this manual before operating your vehicle.

A separate Warranty Information and Maintenance Log Booklet explains details about the warranties covering your vehicle and vehicle maintenance schedules.

Your NISSAN dealer knows your vehicle best. When you require any service or have any questions, he will be glad to assist you with the extensive resources available to him.

⚠ WARNING

IMPORTANT SAFETY INFORMATION
REMINDERS FOR SAFETY!

Follow these five important rules to help ensure a safe and complete trip for you and your passengers!

- **NEVER drive under the influence of alcohol or drugs.**
- **ALWAYS observe posted speed limits and never drive too fast for conditions.**
- **ALWAYS use your seat belts and appropriate child restraint systems.**
- **ALWAYS provide information about the proper use of vehicle safety features to all occupants of the vehicle.**
- **ALWAYS review this Owner's Manual for important safety information.**

© 1996 NISSAN NORTH AMERICA, INC.
TORRANCE, CALIFORNIA

All rights reserved. No part of this Owner's Manual may be reproduced or stored in a retrieval system, or transmitted in any form, or by any means, electronic, mechanical, photocopying, recording or otherwise, without the prior written permission of Nissan North America, Inc.

NOTES ON THE INFORMATION CONTAINED IN THIS OWNER'S MANUAL

This owner's manual contains descriptions and operating instructions for all systems, features and optional equipment that might appear in any model of this vehicle built for any destination in North America, including the continental United States, Canada and Hawaii. Therefore, you may very well find information in this manual that does not apply to your vehicle.

MODIFICATION OF YOUR VEHICLE

This vehicle should not be modified. Modification could affect its performance, safety or durability, and may even violate governmental regulations. In addition, damage or performance problems resulting from modifications may not be covered under NISSAN warranties.

All information, specifications and illustrations in this manual are those in effect at the time of printing. NISSAN reserves the right to change specifications or design without notice and without obligation.

Welcome To The World Of NISSAN

The inside pages of this manual contain a minimum of 50% recycled fibers, including 10% post-consumer fibers.

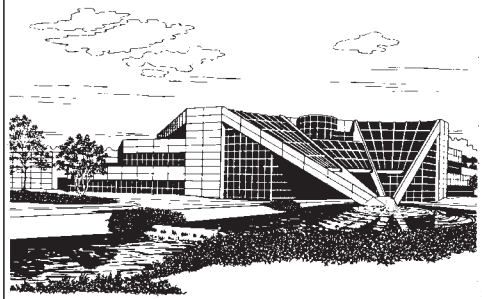

NISSAN RESEARCH & DEVELOPMENT, INC.
in Farmington Hills, Michigan

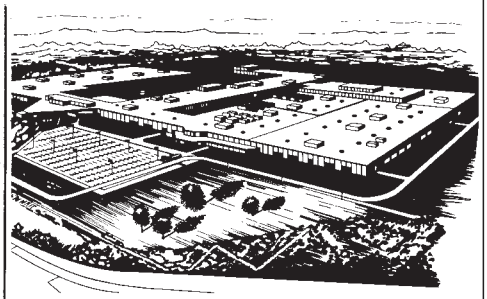

NISSAN MOTOR MANUFACTURING CORPORATION
U.S.A. in Smyrna, Tennessee

AFW0001

Your new Nissan is the result of our dedication to produce the finest in safe, reliable and economical transportation. Your vehicle is the product of a successful worldwide company that manufactures cars and trucks in over 17 countries and distributes them in 170 nations.

Nissan vehicles are designed and manufactured by Nissan Motor Co., Ltd. which was founded in Tokyo, Japan in 1933, and Nissan affiliates world wide, collectively growing to become the fifth largest automaker in the world. In addition to cars and trucks, Nissan also makes textile machinery, forklift trucks, marine engines, boats and other products.

Nissan has made a substantial and growing investment in North America, starting with the opening of Nissan Motor Corporation U.S.A. in 1960 and continuing with the production of some cars and trucks at one of the world's most modern manufacturing facilities, Nissan Motor Manufacturing Corporation U.S.A. in Smyrna, Tennessee, vehicle styling at Nissan Design International in San Diego, California, and engineering at Nissan Research and Development in Farmington Hills, Michigan.

Nissan Motor Corporation U.S.A. and its dealers indirectly employ about 60,000 Americans.

Nissan is also a substantial contributor to the Canadian economy. Nissan Canada Inc., its suppliers and over 170 dealers employ approximately 4,500 people. These include company employees and the staffs of Nissan dealers all across Canada. In addition, many Canadians work for companies that supply Nissan and Nissan dealers with materials and services ranging from the operation of port facilities and transportation services, to the supply of lubricants, parts and accessories.

Nissan pioneered the use of electronics and computers in automobiles, and has led the industry in improving both performance and fuel efficiency through new engine designs and the use of synthetic materials to reduce vehicle weight. The company has also developed ways to build quality into its vehicles at each stage of the production process, both through extensive use of automation and — most importantly — through an awareness that **people** are the central element in quality control.

From the time the parts arrived from our suppliers until you took delivery of your new Nissan, dozens of checks were made to ensure that only the best job was being done in producing and delivering your vehicle. Nissan also takes great care to ensure that when you take your Nissan to your dealer for maintenance, the service technician will perform his work according to the quality standards that have been established by Nissan.

Safety has also been built into your Nissan. As you know, seat belts are an integral part of the safety systems that will help protect you and your passengers in the event of a sudden stop or an accident. We urge you to use the belts every time you drive the vehicle.

The Nissan story of growth and achievement reflects our major goal: to provide you, our customer, with a vehicle that is built with quality and craftsmanship — a product that we can be proud to build and you can be proud to own.

NISSAN CUSTOMER CARE PROGRAM

NISSAN CARES ...

Both NISSAN and your NISSAN dealer are dedicated to serving all your automotive needs. Your satisfaction with your vehicle and your NISSAN dealer are our primary concerns. Your NISSAN dealer is always available to assist you with all your automobile sales and service needs.

However, if there is something that your NISSAN dealer cannot assist you with or you would like to provide NISSAN directly with comments or questions, please contact the NISSAN Consumer Affairs Department using our toll-free number:

For U.S. mainland customers
1-800-NISSAN-1 (1-800-647-7261)

For Hawaii customers
(808) 836-0888 (Oahu Number)

For Canada customers
1-800-387-0122

The Consumer Affairs Department will ask for the following information:

— Your name, address, and telephone number

— Vehicle identification number (on dashboard)

— Date of purchase

— Current odometer reading

— Your NISSAN dealer's name

— Your comments or questions

OR

You can write to NISSAN with the information on the left at:

For U.S. mainland and Alaska customers
Nissan Motor Corporation U.S.A.
Consumer Affairs Department
P.O. Box 191
Gardena, California 90248-0191

For Hawaii customers
Nissan Motor Corporation in Hawaii
2880 Kilihau St.
Honolulu, Hawaii 96819

For Canada customers
Nissan Canada Inc.
P.O. Box 1709, Station ''B''
Mississauga, Ontario L4Y 4H6

We appreciate your interest in NISSAN and thank you for buying a quality NISSAN vehicle.

IMPORTANT INFORMATION ABOUT THIS MANUAL

You will see various symbols in this manual. They are used in the following ways:

⚠ WARNING

This is used to indicate the presence of a hazard that could cause death or serious personal injury. To avoid or reduce the risk, the procedures must be followed precisely.

⚠ CAUTION

This is used to indicate the presence of a hazard that could cause minor or moderate personal injury or damage to your vehicle. To avoid or reduce the risk, the procedures must be followed carefully.

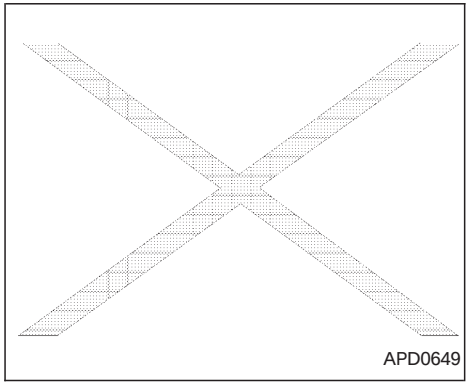

If you see this symbol, it means ‘‘Do not do this’’ or ‘‘Do not let this happen.’’

Contents

Instruments and controls	1
Pre-driving checks and adjustments	2
Heater, air conditioner and audio system	3
Starting and driving	4
In case of emergency	5
Appearance and interior care	6
Do-it-yourself operations	7
Maintenance schedule	8
Technical and consumer information	9
Index	10

1 Instruments and controls

Meters and gauges 1-2
Speedometer and odometer 1-3
Tachometer 1-3
Engine coolant temperature gauge and fuel gauge 1-4
Warning/indicator lights and chimes 1-5
Theft warning (if so equipped) 1-9
Windshield wiper and washer switch 1-10
Rear window defogger switch 1-11
Headlight and turn signal switch 1-12
Daytime running light system (for Canada) 1-13
Cornering light (if so equipped).....1-13
Instrument brightness control.....1-14
Front fog light switch (if so equipped).....1-14
Hazard warning flasher switch 1-14
Cigarette lighter (accessory) and ash tray.....1-15
Cup holder.....1-16
Manual windows.....1-16
Power windows 1-17
Automatic power window switch 1-17
Rear power windows.....1-18
Sunroof (if so equipped).....1-18
If the sunroof does not close 1-19
Clock instrument panel (if so equipped) 1-20
Interior light.....1-20
Trunk light.....1-21
Spotlight (if so equipped) 1-21

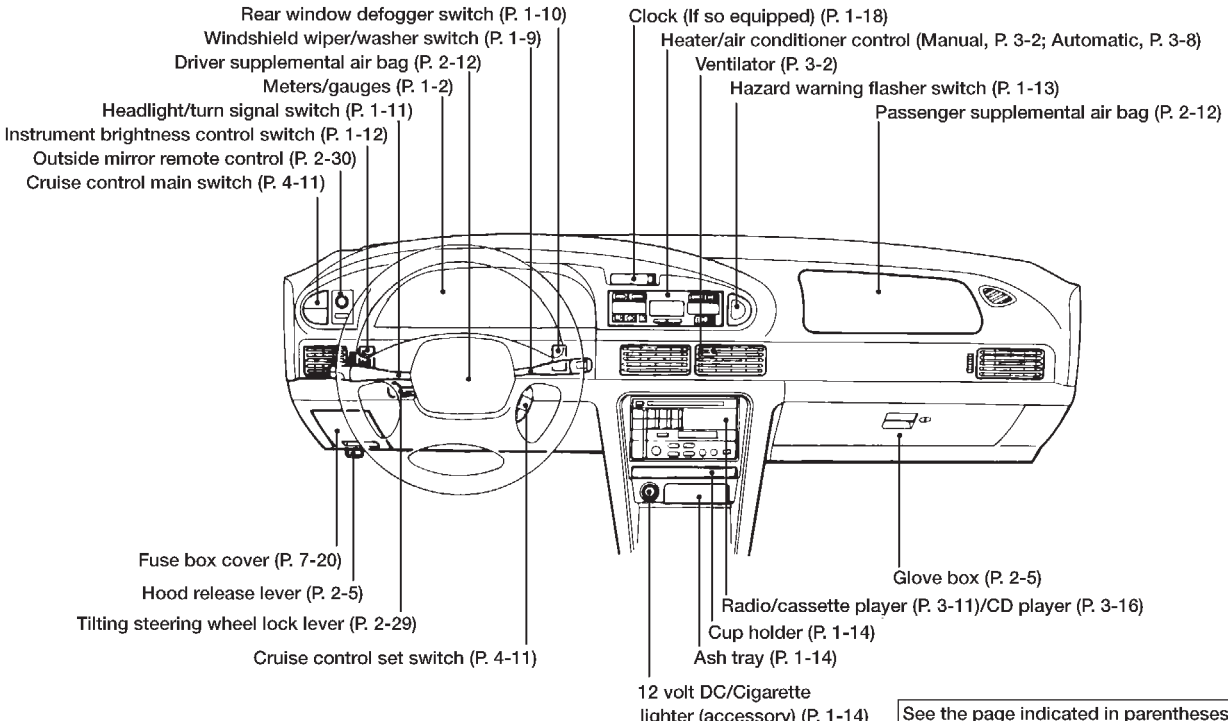

See the page indicated in parentheses for operating details.

AIC0523

SPEEDOMETER AND ODOMETER

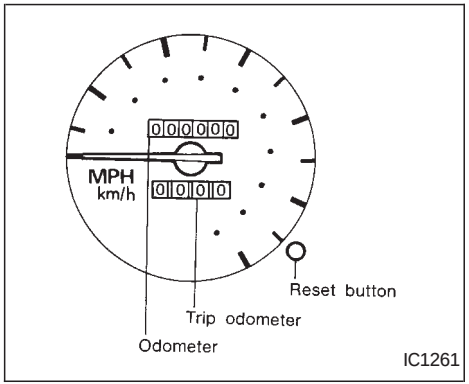

Speedometer

The speedometer indicates vehicle speed.

Odometer

The odometer records the total distance the vehicle has been driven.

Trip odometer

The trip odometer records the distance of individual trips. Before each trip, set the trip odometer to zero by pushing the reset button.

TACHOMETER

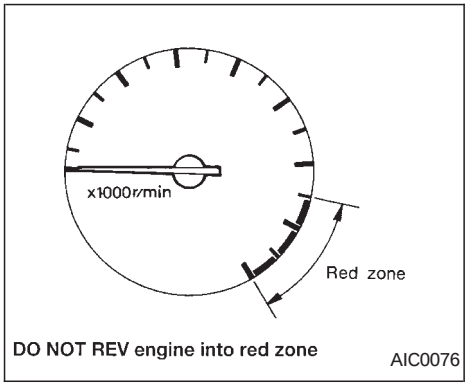

The tachometer indicates engine speed in revolutions per minute (r/min).

⚠ CAUTION

When engine speed approaches the red zone, shift to a higher gear. Operating the engine in the red zone may cause serious engine damage.

ENGINE COOLANT TEMPERATURE GAUGE AND FUEL GAUGE

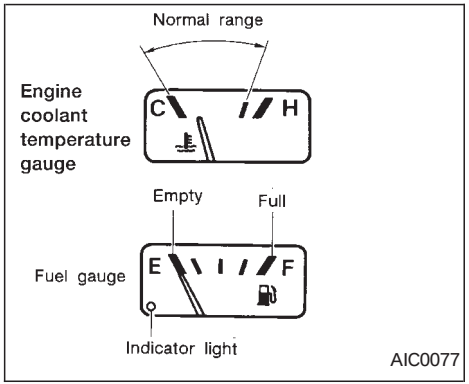

Engine coolant temperature gauge

The gauge indicates the engine coolant temperature.

The engine coolant temperature varies with the outside air temperature and driving conditions.

⚠ CAUTION

If the gauge indicates engine coolant temperature over the normal range, stop the vehicle as soon as safely possible. If the engine is overheated, continued operation of the vehicle may seriously damage the engine. See the ‘‘In case of emergency’’ section for immediate action required.

Fuel gauge

The gauge indicates the **approximate** fuel level in the tank.

The gauge may move slightly during braking, turning, acceleration, or going up or down hills.

The gauge needle remains in approximately the same position even when the ignition key is turned to OFF.

The indicator light comes on when the amount of fuel in the tank is getting low. **Refill the fuel tank before the gauge registers Empty (E).**

or BRAKE Brake warning light	Seat belt warning light	Engine oil pressure warning light
Turn signal/hazard indicator lights	Low washer fluid warning light (Canada only)	CRUISE indicator light
High beam indicator light	ABS or (ABS) Anti-lock brake warning light	AIR BAG Supplemental air bag warning light
Charge warning light	O/D OFF Overdrive off indicator light	Rear window defogger indicator light
Door open warning light	CHECK or SERVICE ENGINE SOON Malfunction indicator light (emission system)	SECU -RITY Theft warning light (If so equipped)

Checking bulbs

Apply the parking brake and turn the ignition key to ON without starting the engine. The following lights come on:

, or BRAKE , , CHECK or SERVICE ENGINE SOON ,

The following lights come on briefly and then go off:

ABS or (ABS) , AIR BAG , O/D OFF

If any light fails to come on, it may indicate a burned-out bulb or an open circuit in the electrical system. Have the system repaired promptly.

Engine oil pressure warning light

This light warns of low engine oil pressure. If the light flickers or comes on during normal driving, pull off the road in a safe area, stop the engine **immediately** and call a NISSAN dealer or other authorized repair shop.

The oil pressure warning light is not designed to indicate a low oil level. Use the dipstick to check the oil level. See ‘‘Engine oil’’ in the ‘‘Do-it-yourself operations’’ section.

CAUTION

Running the engine with the oil pressure warning light on could cause serious damage to the engine almost immediately. Turn off the engine as soon as it is safe to do so.

Charge warning light

If this light comes on while the engine is running, it may indicate a problem with the charging system. Turn the engine off and check the generator belt. If the belt is loose,

broken, or missing, or if the light remains on, see your NISSAN dealer immediately.

⚠ CAUTION

Do not continue driving if the belt is loose, broken or missing.

Door open warning light

This light comes on when any of the doors are not closed securely while the ignition key is ON.

Seat belt warning light and chime

The light and chime remind you to fasten seat belts. The light illuminates whenever the ignition key is turned to ON, and remains illuminated until the driver's seat belt is fastened. At the same time, the chime sounds for about seven seconds unless the driver's seat belt is securely fastened.

Refer to ''Seat belts'' in the ''Pre-driving checks and adjustments'' section for precautions on seat belt usage.

AIR BAG Supplemental air bag warning light

When the ignition key is in the ON or START position, the supplemental air bag warning light illuminates for about 7 seconds and then turns off. This means the system is operational.

If any of the following conditions occur, the supplemental air bag system needs servicing and your vehicle must be taken to your nearest authorized NISSAN dealer:

1. The supplemental air bag warning light does not come on and remain on for 7 seconds and then go off as described above.
2. The supplemental air bag warning light flashes intermittently or remains on.
3. The supplemental air bag warning light does not come on at all.

Unless checked and repaired, the Supplemental Restraint System (Supplemental air bag system) may not function properly. For additional details, see ''Supplemental Restraint System'' in the ''Pre-driving checks and adjustments'' section.

⚠ WARNING

- **If the supplemental airbag warning light is on, it could mean that the supplemental airbag will not operate in an accident.**

Low washer fluid warning light (Canada only)

This light comes on when the washer fluid is at a low level. Add washer fluid as necessary. See the ''Do-it-yourself operations'' section.

or BRAKE Brake warning light

This light functions for both the parking brake and the foot brake systems.

The light comes on when the parking brake is applied, and also warns of a low brake fluid level. If the light comes on while the engine is running with the parking brake not applied, stop the vehicle and perform the following:

1. Check the brake fluid level. Add brake fluid as necessary. See ''Brake and clutch fluid'' in the ''Do-it-yourself operations'' section.

2. If the brake fluid level is correct, have the warning system checked by your NISSAN dealer.

⚠ WARNING

- **Your brake system may not be working properly if the warning light is on. Driving could be dangerous. If you judge it to be safe, drive carefully to the nearest service station for repairs. Otherwise, have your vehicle towed.**
- **Pressing the brake pedal with the engine stopped and/or low brake fluid level may increase your stopping distance and braking will require greater pedal effort as well as greater pedal travel.**
- **If the brake fluid level is below the minimum mark on the brake fluid reservoir, do not drive until the brake system has been checked at a NISSAN dealer.**

Brake pad wear warning

The disc brake pads have audible wear warnings. When a brake pad requires replacement, it makes a high pitched scraping sound when the vehicle is in motion, whether or not the brake pedal is depressed. Have the brakes checked as soon as possible if the warning sound is heard.

ABS or (ABS) Anti-lock brake warning light (If so equipped)

If the light comes on while the engine is running, it may indicate something wrong with the anti-lock portion of the brake system. Have the system checked by your NISSAN dealer.

Turn off the engine, and start it again by slowly turning the ignition key (quickly doing so may cause the ABS light to stay on when there is nothing wrong). If the light stays on, have the system checked by your NISSAN dealer.

If an abnormality occurs in the system, the anti-lock function ceases but the regular braking system continues to operate.

If the light comes on while you are driving, contact your NISSAN dealer for repair.

O/D OFF Overdrive off indicator light (Automatic transmission models only)

This light comes on when the overdrive switch is pushed to the OFF position.

Turn signal/hazard indicator lights

The appropriate light flashes when the turn signal switch is activated.

Both lights flash when the hazard switch is turned on.

High beam indicator light

This light comes on when the headlight high beam is on and goes out when the low beam is selected.

Rear window defogger indicator light

This light comes on when the rear defogger switch is activated.

CRUISE Cruise indicator light

This light comes on while the vehicle speed is controlled by the cruise control system. If the CRUISE indicator blinks, have the sys-

tem checked by your NISSAN dealer.

SECU -RITY Theft warning light (If so equipped)

This light is used to verify theft warning system activation. For further information, see ‘‘Theft Warning’’ later in this chapter.

Key reminder chime

A chime sounds if the driver side door is opened while the key is left in the ignition switch. Remove the key and take it with you when leaving the vehicle.

Light reminder chime

A chime sounds when the driver side door is opened if the headlight switch is turned on (ignition switch is turned OFF).

Turn the light switch OFF when you leave the vehicle.

CHECK or SERVICE ENGINE SOON Malfunction indicator light (MIL)

If the malfunction indicator light comes on steady or blinks while the engine is running, it may indicate a potential emission control problem.

The malfunction indicator light will come on in one of two ways:

1. Malfunction indicator light on steady - An emission control system malfunction has been detected. Have the vehicle inspected by an authorized NISSAN dealer. You do not need to have your vehicle towed to the dealer.
2. Malfunction indicator light blinking - An engine misfire has been detected which may damage the emission control system. To reduce or avoid emission control system damage:
   - do not drive at speeds above 45 MPH (72 km/h).
   - avoid hard acceleration or deceleration.
   - avoid steep uphill grades.
   - if possible, reduce the amount of cargo behind hauled or towed.

The malfunction indicator light may stop blinking and come on steady. Have the vehicle inspected by an authorized NISSAN dealer. You do not need to have your vehicle towed to the dealer.

⚠ CAUTION

Continued vehicle operation without having the emission control system checked and repaired as necessary could lead to poor driveability, reduced fuel economy, and possible damage to the emission control system, which may affect your warranty coverage.

Some conditions may cause the malfunction indicator light to come on steady or blink. For example, running the vehicle out of fuel, which causes the engine to misfire, may cause the malfunction indicator light to come on steady or blink.

If you suspect that you experienced this condition, drive the vehicle to an authorized NISSAN dealer and have the vehicle inspected. Avoid any unnecessary diagnosis during the service by informing the dealer of the condition that may have occurred.

THEFT WARNING
(If so equipped)

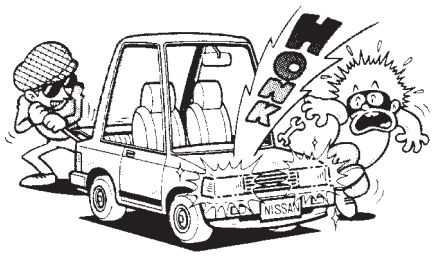

IC0005

The theft warning system provides visual and audio alarm signals if parts of the vehicle are disturbed.

How to activate the theft warning system

1. Close all windows.
2. Remove the key from the ignition switch.
3. Close and lock all doors, hood and trunk lid. Lock all doors by pressing the button on the multi-remote controller. At this time, the hazard indicators flash twice to indicate all doors are locked.

The system can be activated even if the windows are open.

4. Confirm that the SECURITY indicator light comes on. The SECURITY light glows for about 30 seconds and then begins to flash once every three seconds. The system is now activated. If, during this 30-second time period, the door is unlocked by the key or the multi-remote controller, or the ignition key is turned to ACC or ON, the system will not activate.

If the key is turned slowly when locking the door, the system may not activate. Furthermore, if the key is turned excessively to the unlock position, the system may be deactivated when the key is removed. If the indicator light fails to glow for 30 seconds, unlock the door once and lock it again.

Even when the driver and/or passengers are in the vehicle, the system will activate with all doors, hood and trunk lid locked and ignition key off. Turn the ignition key to ACC or ON to turn the system off.

Theft warning system operation

The theft warning system emits the following alarm:

- The headlights blink and the horn sounds intermittently. In addition, the starter motor does not operate.
- The alarm automatically turns off after 2 to 3 minutes. However, the alarm reactivates if the vehicle is tampered with again. The alarm can be shut off by unlocking a door or trunk lid with the key, or by pressing the button on the multi-remote controller.

The alarm is activated by:

- opening the door or trunk lid without using the key (even if the door is unlocked by releasing the door inside lock switch) or opening the trunk lid by operating the opener lever.
- opening the hood.
- pushing in or pulling out the key cylinder on the door or trunk lid.

How to stop the alarm

The alarm stops only by unlocking a door or the trunk lid with the key, or by pressing

the button on the multi-remote controller. The alarm does not stop if the ignition switch is turned to ACC or ON.

If the system does not operate as described above, have it checked by your NISSAN dealer.

WINDSHIELD WIPER AND WASHER SWITCH

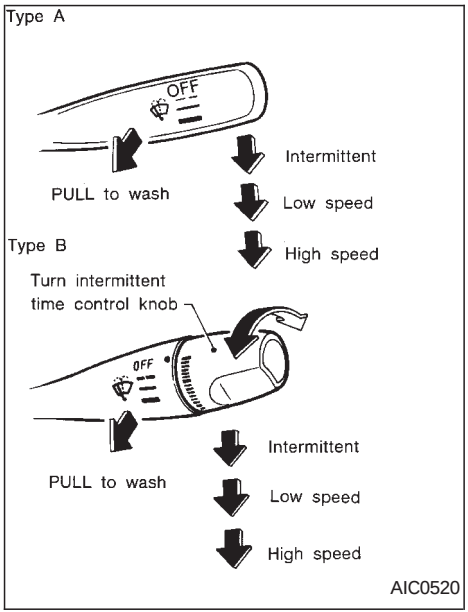

Push the lever down to operate the windshield wipers. Pull the lever toward you to operate the washer.

Intermittent operation can be adjusted from 2 to approximately 20 seconds by turning the knob (Type B only).

The wipers cycle twice when the washer is activated.

CAUTION

The following could damage the washer system:

- **Do not operate the washer continuously for more than 30 seconds.**
- **Do not operate the washer if the reservoir tank is dry.**

WARNING

In freezing temperatures the washer solution may freeze on the windshield and obscure your vision which may lead to an accident. Warm the windshield with the defroster before you wash the windshield.

REAR WINDOW DEFOGGER SWITCH

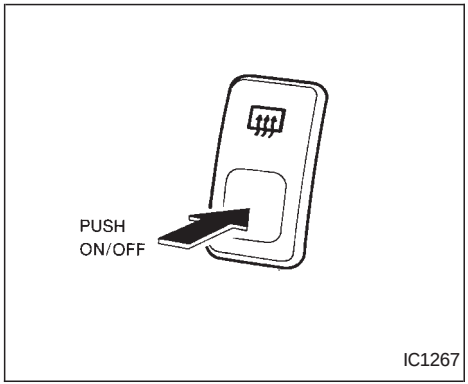

To defog the rear window glass, start the engine and push the rear window defogger switch on. The rear window defogger indicator light in the meter comes on in the instrument panel. Push the switch again to turn the defogger off.

The rear window defogger switch automatically turns off in approximately 15 minutes.

⚠ CAUTION

When cleaning the inner side of the window, be careful not to scratch or damage the rear window defogger.

NOTE: On some vehicles, the top few rows of wires on the rear window are not part of the rear window defogging system. These wires, if so equipped, make up the diversity antenna for the audio system.

HEADLIGHT AND TURN SIGNAL SWITCH

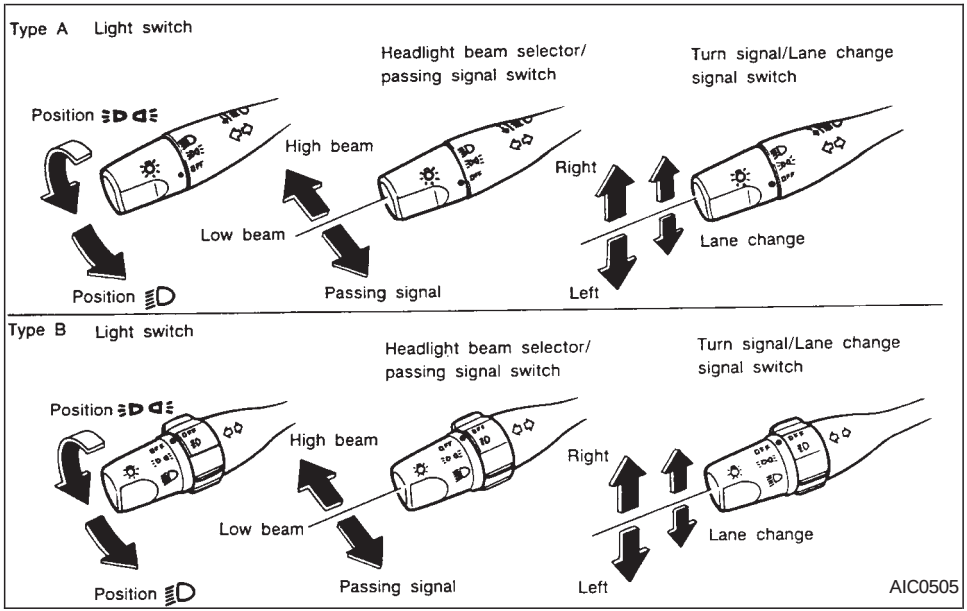

Lighting

Turn the switch to the position: The front clearance, side marker, tail, license plate and instrument panel lights come on.

Turn the switch to the position: The headlights come on and all the other lights remain on.

To select the high beam function, push the lever forward. The high beam lights come on and the indicator light illuminates. Pull it back to select the low beam.

DAYTIME RUNNING LIGHT SYSTEM (for Canada)

The headlights automatically illuminate at a reduced intensity when the engine is started with the parking brake released. The daytime running lights operate with the headlight switch in the ‘‘OFF’’ position or in the “ ” position. Turn the headlight switch to the “ ” position for full illumination when driving at night.

If the parking brake is applied before the engine is started, the daytime running lights do not illuminate. The daytime running lights illuminate once the parking brake is released. The daytime running lights will remain on until the ignition switch is turned off.

WARNING

When the daytime running light system is active, tail lights on your vehicle are not on. It is necessary at dusk to turn on your headlights. Failure to do so could cause an accident injuring yourself and others.

Passing signal

Pulling and releasing the lever flashes the headlight high beams on and off.

Turn signal

Move the lever up or down to signal the turning direction. When the turn is completed, the turn signals cancel automatically.

Lane change signal

To signal a lane change, move the lever up or down to the point where the indicator light begins to flash, but the lever does not latch.

CORNERING LIGHT (If so equipped)

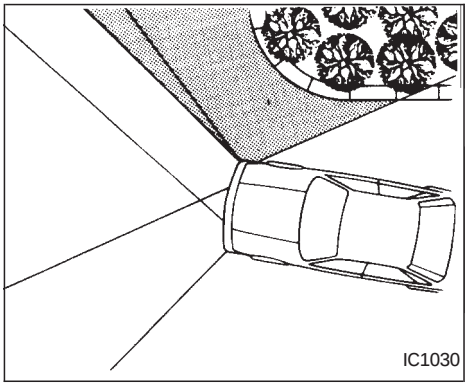

The cornering light provides additional illumination toward the turning direction. The light on the turning direction side comes on when a turn is signaled with the headlights on.

INSTRUMENT BRIGHTNESS CONTROL

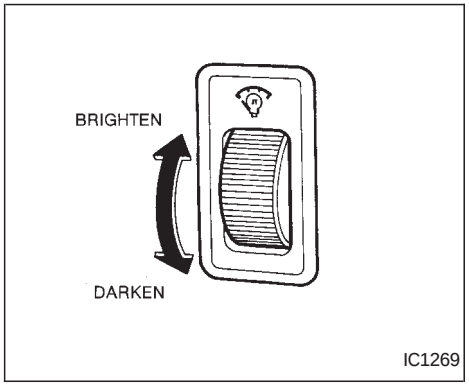

The instrument brightness control operates when the light switch is in the ≡D⊂≡ or ≡D position.

Turn the control to adjust the brightness of instrument panel lights.

NOTE: For vehicles with the clock located in the instrument panel, the instrument brightness control function has no effect on the brightness of the clock.

FRONT FOG LIGHT SWITCH (If so equipped)

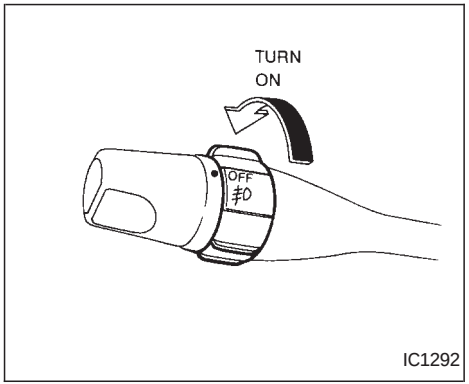

To turn the front fog lights on, rotate the switch to the ≡D position.

To turn them off, turn the switch to the OFF position.

The low-beam headlight function must be on for the fog lights to operate. The fog lights automatically turn off whenever the high-beam headlight function is selected.

HAZARD WARNING FLASHER SWITCH

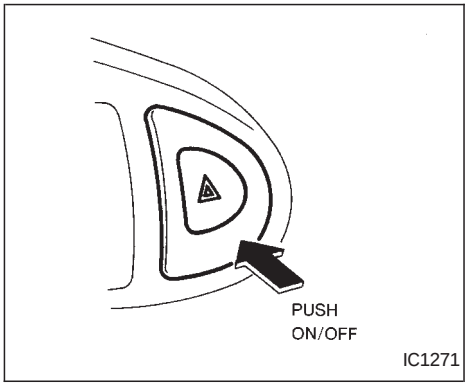

Push the switch on to warn other drivers when you must stop or park under emergency conditions. All turn signal lights flash.

⚠ WARNING

- **When stalled or stopped on the roadway under emergency conditions, move the vehicle well off the road.**

- **Do not use the switch while moving on the highway unless unusual circumstances force you to drive so slowly that your vehicle might become a hazard to other traffic.**
- **Turn signals do not work when the hazard warning flasher lights are on.**

The flashers can be actuated with the ignition switch either OFF or ON.

Some state laws may prohibit the use of the hazard warning flasher switch while driving.

CIGARETTE LIGHTER (ACCESSORY) AND ASH TRAY

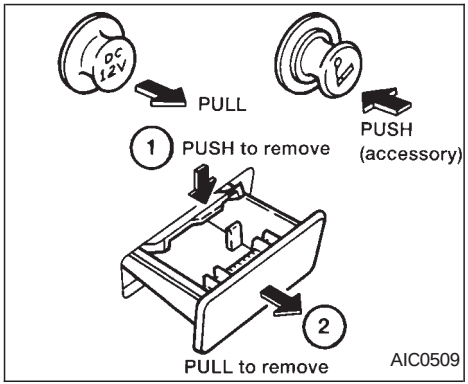

The cigarette lighter element is an accessory. A genuine NISSAN cigarette lighter or equivalent can be purchased from your local NISSAN dealer.

The cigarette lighter operates when the ignition switch is in the ACC or ON position.

Push the lighter in all the way. When the lighter is heated, it springs out.

Return the lighter to its original position after use.

⚠ CAUTION

The cigarette lighter socket is a power source for the cigarette lighter element only. The use of the cigarette lighter socket as a power source for any other accessory is not recommended.

⚠ WARNING

The cigarette lighter should not be used while driving in order that full attention may be given to the driving operation.

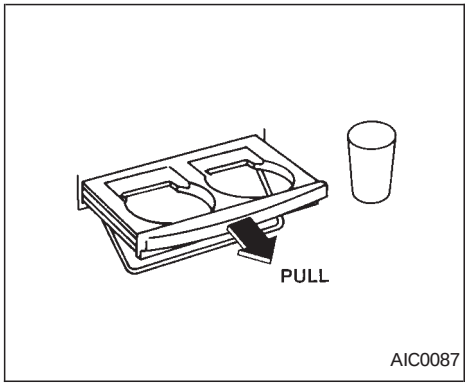

To open, pull the cup holder out.

To close, push the cup holder in.

The cup holder and the ashtray cannot be used at the same time. Close the ashtray before using the cup holder.

⚠ WARNING

The driver should not pull out the cup holder or remove or insert cups into the cup holder while driving in order that full attention may be given to the driving operation.

⚠ CAUTION

- **Avoid abrupt starting and braking when the cup holder is being used to prevent spilling the drink. If the liquid is hot, it can scald you or your passenger.**
- **Use only soft cups in the cupholder. Hard objects can injure you in an accident.**

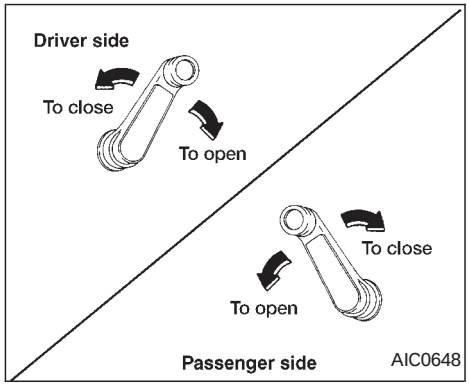

The side windows can be opened or closed by turning the hand crank on each door.

⚠ WARNING

- **Make sure that all passengers have their hands, etc. inside the vehicle before closing the windows. Use the window lock switch to prevent unexpected use of the power windows.**
- **Do not leave children unattended inside the vehicle. They could unknowingly activate switches or controls and become trapped in a window. Unattended children could become involved in serious accidents.**

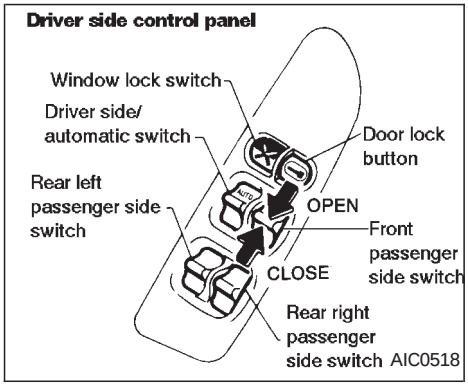

The power windows operate only when the ignition key is in the ON position. To open a window, press down on the switch. To close a window, push up on the switch. To stop the opening or closing function at any time, simply release the switch.

The driver side control panel is equipped with switches to open or close all of the windows.

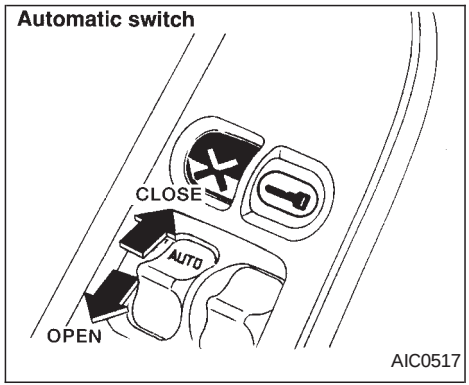

AUTOMATIC POWER WINDOW SWITCH

To fully open the driver side window, completely press the driver side window switch down and release it; it need not be held. The window automatically opens all the way. To stop the window, push up on the switch while the window is opening.

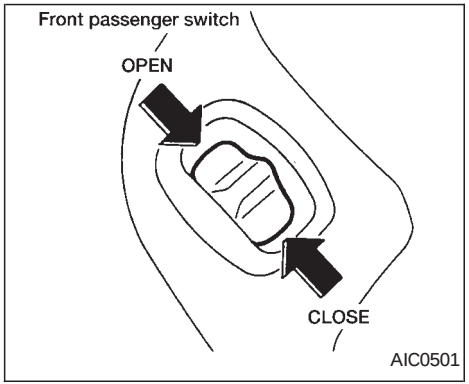

The front passenger switch operates only the front passenger window. To open or close the window, press and hold the switch.

Locking passenger windows

When the power window lock switch on the driver side control panel is pushed in, only the driver side window can be opened or closed. Push it in again to cancel this function.

REAR POWER WINDOWS

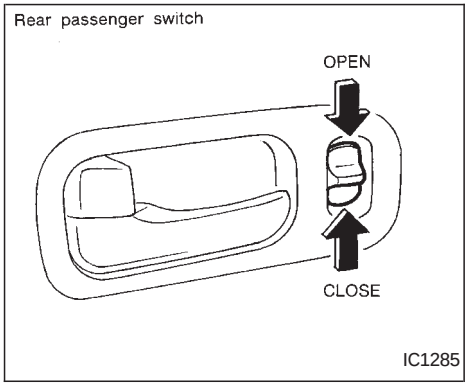

SUNROOF (If so equipped)

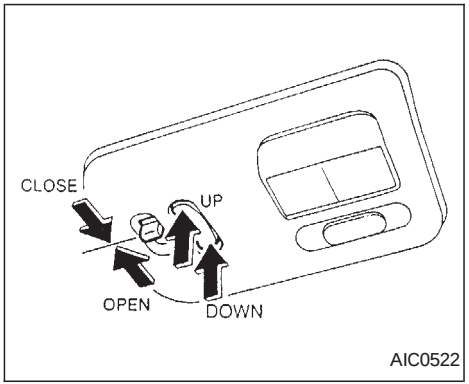

The sunroof only operates when the ignition key is in the ON position.

Sliding the sunroof

To open the roof, press and hold the switch to the OPEN side.

To close the roof, press and hold the switch to the CLOSE side.

Tilting the sunroof

To tilt up, first close the sunroof, then push and hold the UP side of the tilt switch. To close the sunroof, push and hold the DOWN side.

Sun shade

Open and close the sun shade by sliding it forward or backward.

⚠ WARNING

- **In an accident you could be thrown from the vehicle through an open sunroof. Always use seat belts and child restraints.**
- **Do not allow anyone to stand up or extend any portion of their body out of the opening while the vehicle is in motion or while the sunroof is closing.**

⚠ CAUTION

- **Remove water drops, snow, ice or sand from the sunroof before opening.**
- **Do not place any heavy object on the sunroof or surrounding area.**

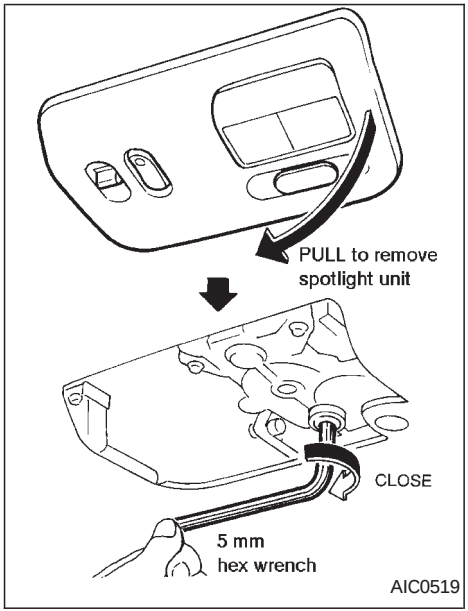

IF THE SUNROOF DOES NOT CLOSE

1. Turn the ignition key to the OFF position. Be sure no objects are caught in the sunroof opening.
2. Remove the spotlight unit. The shaft end of the sunroof motor will be visible.
3. Using a 5mm (0.20 in) hex wrench, turn the shaft clockwise to close the sunroof.

Have the sunroof system checked and repaired by your NISSAN dealer.

CLOCK — INSTRUMENT PANEL (If so equipped)

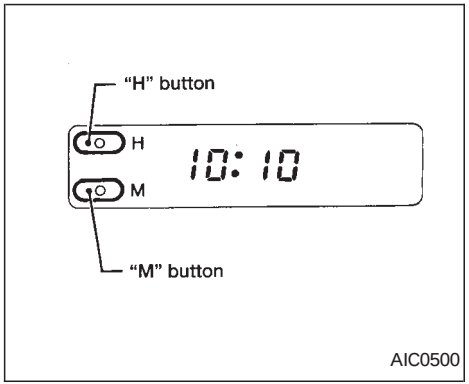

The digital clock displays time when the ignition key is in the ACC or ON position.

If the power supply is disconnected, the clock will not indicate the correct time. Readjust the time.

Adjusting the time

Push the **H** button to adjust the hour.

Push the **M** button to adjust the minute.

NOTE: The clock displays 12-hour time with no AM/PM indications.

INTERIOR LIGHT

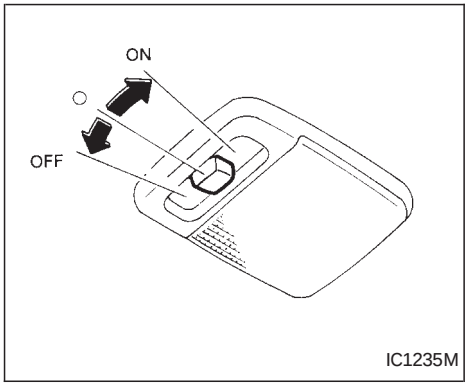

The interior light operates regardless of ignition key position.

The interior light has a three-position switch.

- When the switch is in the OFF position, the interior light does not illuminate, regardless of door position.
- When the switch is in the center ◯ position, the interior light illuminates when a door is opened.
- When the switch is in the ON position, the interior light illuminates, whether any door is open or closed.

⚠ CAUTION

Leaving the interior light switch in the ON position for extended periods of time will result in a discharged battery.

SPOTLIGHT (If so equipped)

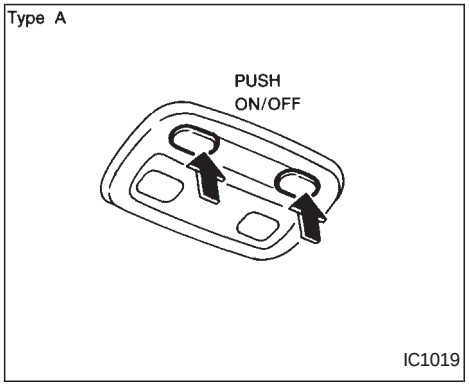

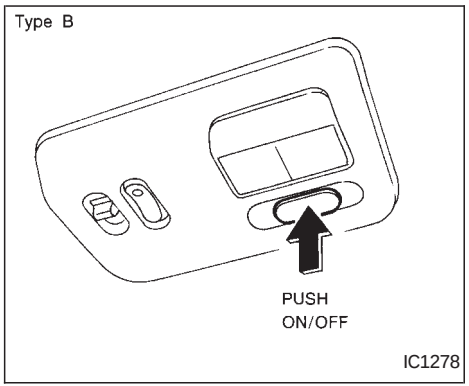

TRUNK LIGHT

The light illuminates when the trunk lid is opened. When the trunk lid is closed, the light goes off.

2 Pre-driving checks and adjustments

Key 2-2
Door locks 2-2
Manual door lock.....2-2
Power door lock 2-3
Child safety rear door lock.....2-4
Multi-remote control system (if so equipped).....2-4
Battery replacement 2-6
Hood release.....2-8
Glove box 2-8
Trunk lid lock operation.....2-9
Opener cancel lever for trunk lid.....2-10
Fuel filler lid lock operation 2-10
Fuel filler cap.....2-11
Front seats 2-12
Seat adjustment 2-12
Head restraints.....2-14
Rear seat.....2-15
Supplemental restraint system (air bag system).....2-16
Supplemental air bag system.....2-19
Warning labels.....2-21
Supplemental air bag warning light.....2-21
Seat belts 2-23
Precautions on seat belt usage 2-23
Child safety.....2-25
3-point type with retractor 2-26
2-point type without retractor (center position of rear seat).....2-28
Seat belt extenders 2-30
Seat belt maintenance 2-30
Child restraints for infants and small children.....2-30
Top strap child restraint 2-34
Tilting steering wheel 2-37
Outside mirror remote control 2-37
Outside mirrors.....2-37
Inside mirror 2-38
Vanity mirror.....2-38

KEY

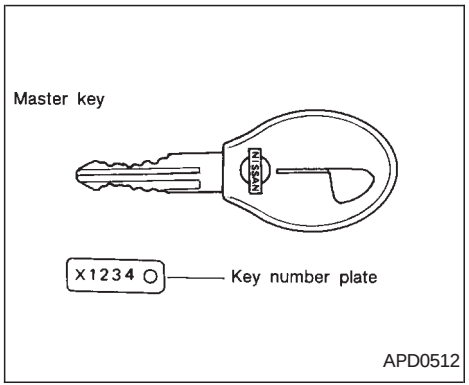

The master key can be used for all of the locks.

A key number plate is supplied with your key. Record the key number on the key number plate and keep it in a safe place (such as your wallet), NOT IN THE CAR. NISSAN does not record key numbers so it is very important to keep track of your key number plate.

A key number is only necessary when you have lost all keys and do not have one to duplicate from. If you still have a key, this key can be duplicated by your NISSAN dealer or a locksmith shop.

DOOR LOCKS

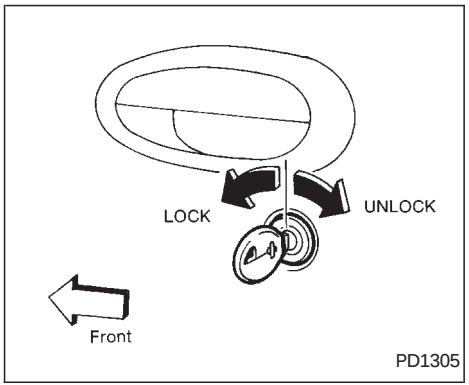

MANUAL DOOR LOCK

To lock the front doors from the outside, turn the key toward the front of the vehicle. To unlock, turn it toward the rear.

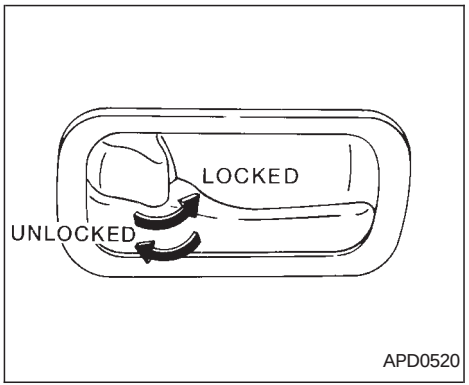

To lock a door from inside the vehicle, press the lock knob (located above the door handle) until it is flush with the door panel. To unlock, pull the lock knob to its outer position.

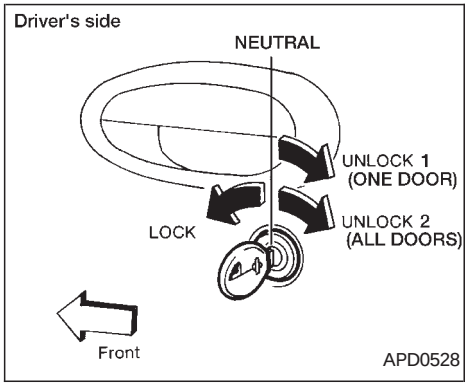

POWER DOOR LOCK

The power door lock system allows you to lock or unlock all doors simultaneously.

Turning the front door key to the front of the vehicle locks all doors.

Turning the front door key one time to the rear of the vehicle unlocks the corresponding door. From that position, returning the key to Neutral (where the key can only be removed and inserted) and turning it to the rear again within 5 seconds unlocks all doors.

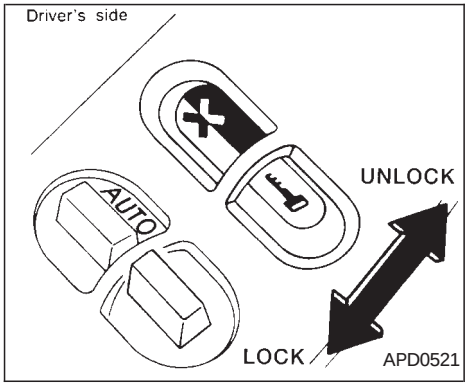

To lock from the outside without a key, push the door lock button (driver side only) or the door lock knob (driver or passenger side), then close the door. When locking the door this way, be certain not to leave the key inside the vehicle.

All doors automatically unlock with the key in the ignition.

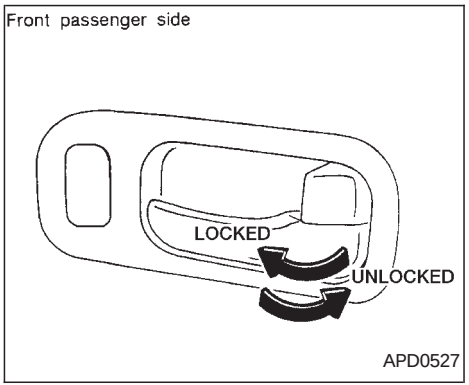

⚠ WARNING

- **Always have the doors locked while driving. Along with the use of seat belts, this provides greater safety in the event of an accident by helping to prevent persons from being thrown from the vehicle. This also helps keep children and others from unintentionally opening the doors, and will help keep out intruders.**
- **Before opening any door, always look for and avoid oncoming traffic.**

- **Do not leave children unattended inside the vehicle. They could unknowingly activate switches or controls. Unattended children could become involved in serious accidents.**

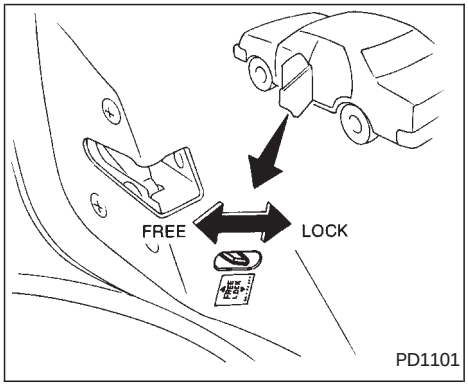

CHILD SAFETY REAR DOOR LOCK

Child safety locks help prevent rear doors from being opened accidentally, especially when small children are in the vehicle.

The child safety lock levers are located on the edge of the rear doors.

When the lever is in the lock position, the door can be opened only from the outside.

MULTI-REMOTE CONTROL SYSTEM (if so equipped)

It is possible to lock/unlock all doors, turn the interior light on and activate the panic alarm by using the remote controller from outside the vehicle.

Be sure to remove the key from the vehicle before locking the doors and leaving it.

The remote controller can operate at a distance of approximately 49 ft (15 m) from the vehicle. (The effective distance depends on the conditions around the vehicle.)

As many as four remote controllers can be used with one vehicle. For information concerning the purchase and use of additional remote controllers, contact your NISSAN dealer.

CAUTION

Listed below are conditions or occurrences which will damage the remote controller:

- **Do not allow the remote controller to become wet.**

- **Do not drop the remote controller.**
- **Do not strike the remote controller sharply against another object.**
- **Do not place the remote controller for an extended period in an area where temperatures exceed 140°F (60°C).**

Locking doors

1. Remove the ignition key.
2. Close all of the doors.
3. Push the button on the multi-remote controller.
4. All of the doors lock.
5. The hazard indicators flash twice.

- When the button is pushed with all doors locked, the hazard indicator flashes twice as a reminder that the doors are already locked.

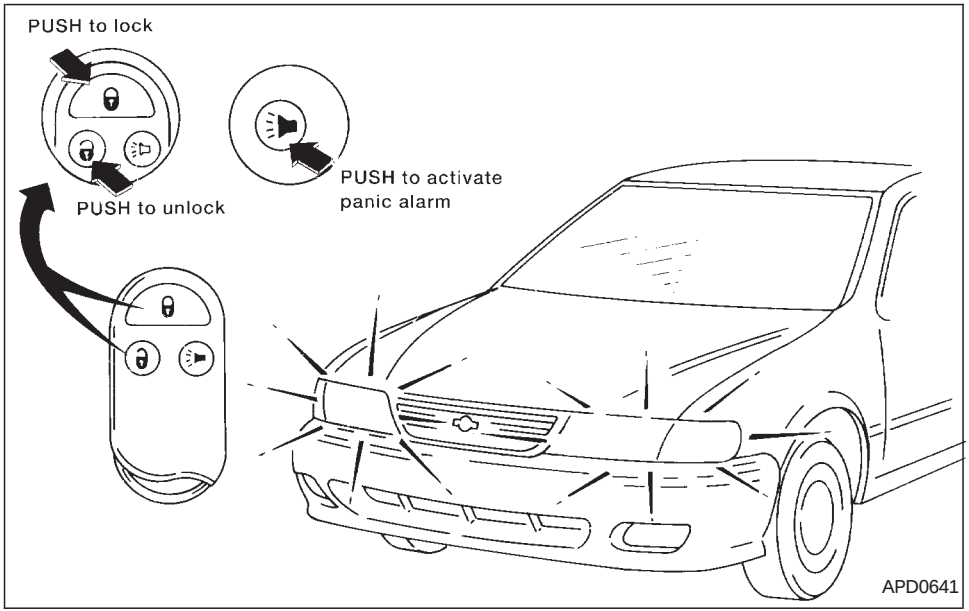

Unlocking doors

1. Push the button on the multi-remote controller. Only the driver side door unlocks.
2. Push the button on the multi-remote controller again within five seconds. The passenger doors unlock.
3. The interior light comes on and stays on for 30 seconds when the light switch is in the O position.

The interior light can be turned off without waiting 30 seconds by inserting the key into the ignition or locking the doors with the multi-remote controller or pushing the interior light button to OFF.

Using the panic alarm

If you are near your vehicle and feel threatened, you may activate the alarm to call attention as follows:

1. Push the button on the remote controller for **longer than 1.5 seconds.**
2. The theft warning alarm and headlights will stay on for 30 seconds.
3. The panic alarm stops when:

- it has run for 30 seconds, or
- the or the button is pressed, or
- the button is pushed for longer than 1.5 seconds on the multi-remote controller.

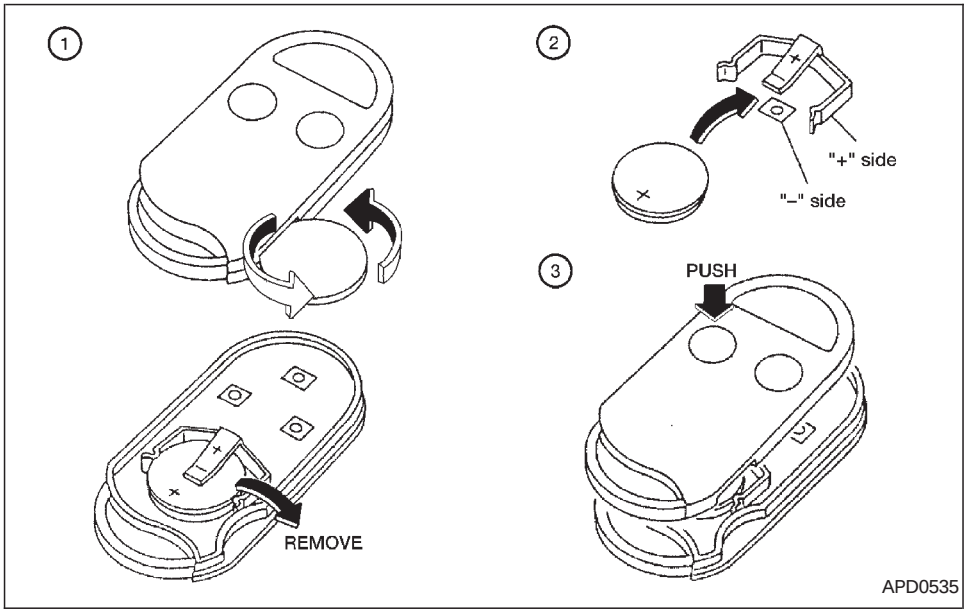

Replace the battery in the multi-remote controller as follows:

1. Open the lid using a coin.
2. Replace the battery with a new one. Insert the battery as illustrated above. Recommended battery: Sanyo CR2025 or equivalent.
3. Close the lid securely.
4. Press the button, then the button two or three times to check the multi-remote controller operation.

If the batteries are removed for any reason other than replacement, perform step 4 above.

- **An improperly disposed battery can hurt the environment. Always confirm local regulations for battery disposal.**
- **The multi-remote controller is water-resistant; however, if it does get wet, immediately wipe completely dry.**
- **The operational range of the multi-remote controller extends to approximately 49 ft (15 m) from the vehicle. This range may vary with conditions.**

FCC Notice:

Changes or modifications not expressly approved by the manufacturer for compliance could void the user's authority to operate the equipment.

This device complies with part 15 of the FCC Rules and RSS-210 of Industry Canada.

Operation is subject to the following two conditions: (1) This device may not cause harmful interference, and (2) this device must accept any interference received including interference that may cause undesired operation of the device.

HOOD RELEASE

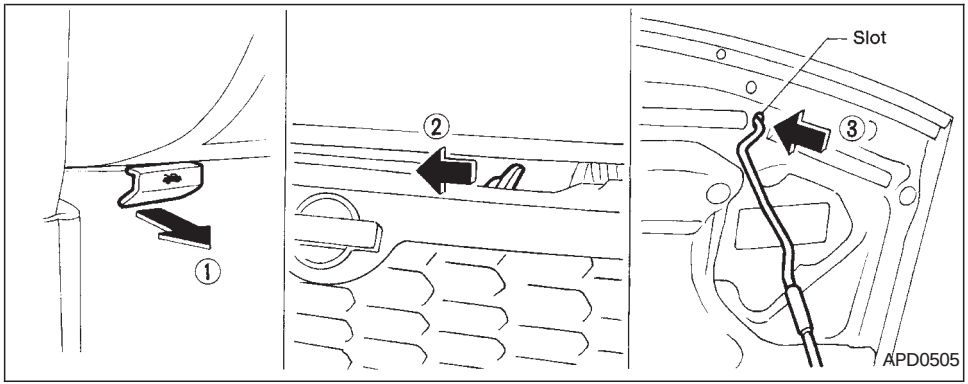

1. Pull the hood lock release handle ① located below the instrument panel; the hood springs up slightly.
2. Push the lever ② at the front of the hood with your fingertips and raise the hood.
3. Insert the support rod ③ into the slot on the underside of the hood.
4. When closing the hood, return the support rod to its original position, then slowly close the hood and make sure it locks into place.

⚠ WARNING

- **Make sure the hood is completely closed and latched before driving. Failure to do so could cause the hood to fly open and result in an accident.**
- **If you see steam or smoke coming from the engine compartment, to avoid injury do not open the hood.**

GLOVE BOX

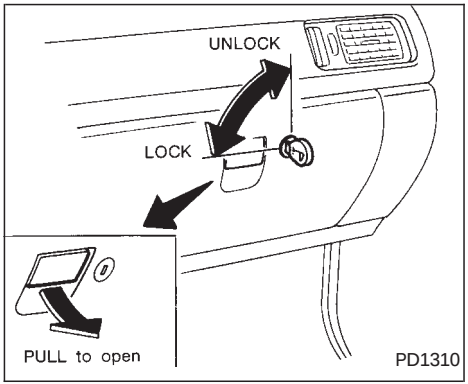

Use the master key to lock or unlock the glove box.

The glove box opens by pulling the handle.

To illuminate the interior of the glove box, the headlight switch must be turned to the ≡DC≡ or ≡◯ position (If so equipped).

⚠ CAUTION

Keep glove box lid closed while driving to help prevent injury in an accident or a sudden stop.

TRUNK LID LOCK OPERATION

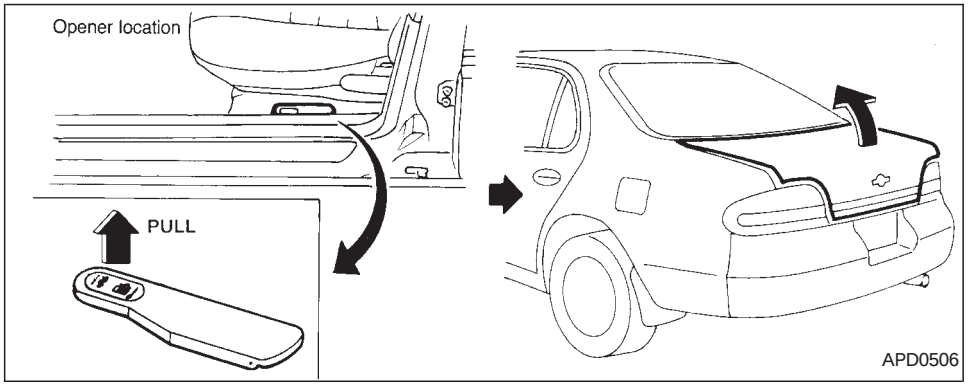

Opener lever operation

The trunk lid opener lever is located on the outside of the driver's seat. To open the trunk lid, pull up the opener lever.

To close, lower and push the trunk lid down securely.

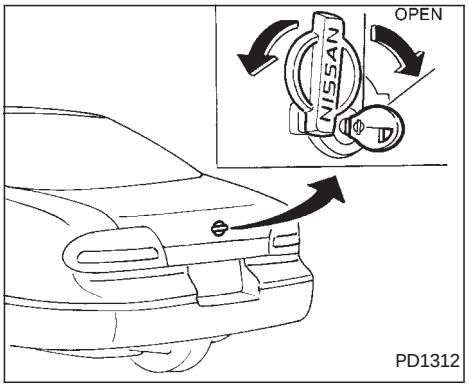

Key operation

To open the trunk lid, turn the key clockwise. To close, lower and push the trunk lid down securely.

⚠ WARNING

Do not drive with the trunk lid open. This could allow dangerous exhaust gases to be drawn into the vehicle. See ''Exhaust Gas'' in the ''Starting and Driving'' Section.

FUEL FILLER LID LOCK OPERATION

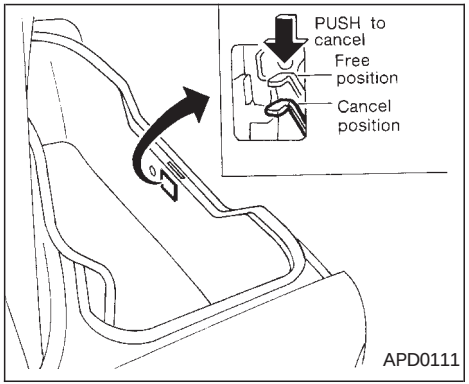

OPENER CANCEL LEVER FOR TRUNK LID

When this lever is in the cancel position, the trunk lid cannot be opened with the trunk lid opener lever. It can be opened only with the key.

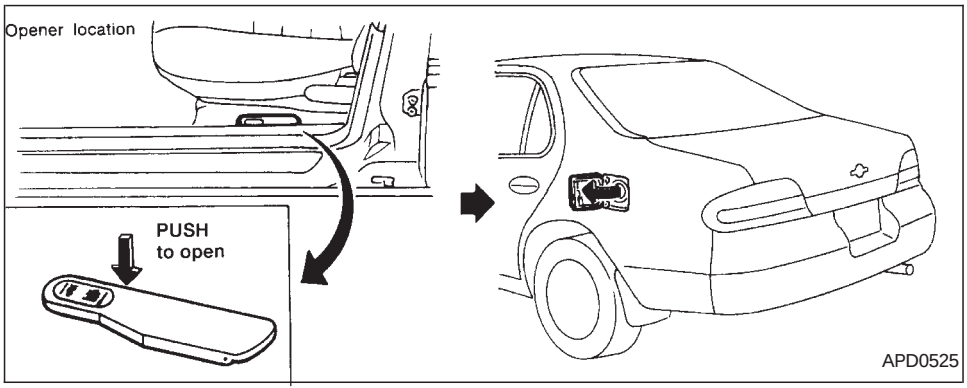

Opener lever operation

The fuel filler lid opener lever is located on the outside of the driver's seat. To open the fuel filler lid, push the opener lever down. To lock, close the fuel filler lid securely.

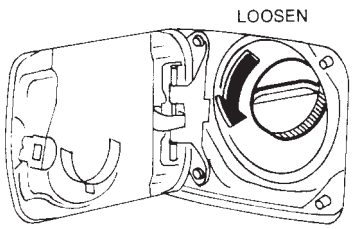

PD1013

FUEL FILLER CAP

The fuel filler cap is a screw-on ratcheting type. Tighten the cap clockwise until ratcheting clicks are heard.

⚠ WARNING

- **Gasoline is extremely flammable and highly explosive under certain conditions. You could be burned or seriously injured if it is misused or mishandled. Always stop the engine and do not smoke or allow open flames or sparks near the vehicle when refueling.**
- **Fuel may be under pressure. Turn the cap one-half turn, and wait for any ‘‘hissing’’ sound to stop to prevent fuel from spraying out and possible personal injury. Then remove the cap.**
- **Use only a genuine NISSAN fuel filler cap as a replacement. It has a built-in safety valve needed for proper operation of the fuel system and emission control system. An incorrect cap can result in a serious malfunction and possible injury.**

⚠ CAUTION

If fuel is spilled on the car body, flush it away with water to avoid paint damage.

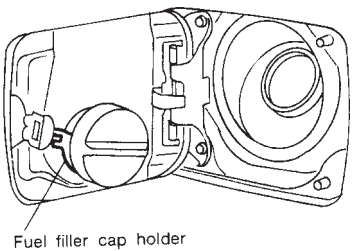

PD1014

Put the fuel filler cap on the cap holder while refueling.

SEAT ADJUSTMENT

WARNING

- **Do not adjust the driver's seat while driving. The seat may move suddenly and could cause loss of control of the vehicle.**
- **After adjustment, gently rock in the seat to make sure it is securely locked.**

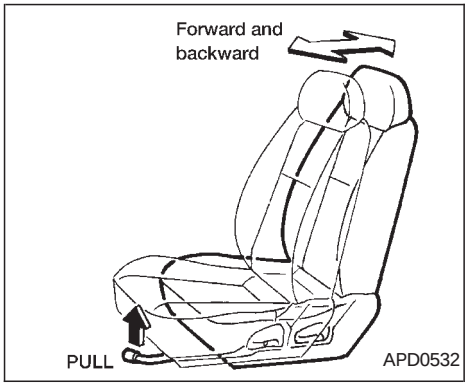

Forward and backward

Pull the lever up while you slide the seat forward or backward to the desired position. Release the lever to lock the seat in position.

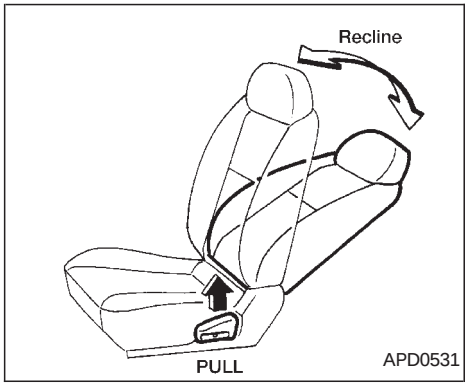

Reclining

To recline the seatback, pull the lever up and lean back. To bring the seatback forward again, pull the lever and move your-body forward. The seatback moves forward.

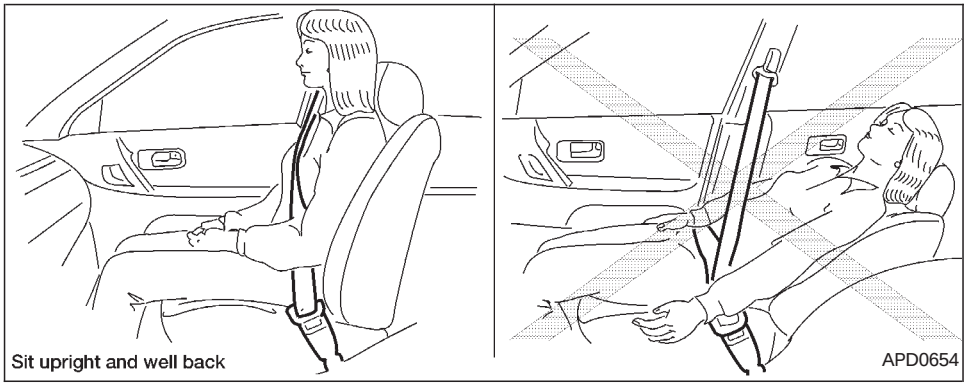

⚠ WARNING

Do not ride in a moving vehicle when the seatback is reclined. This can be dangerous. The shoulder belt will not be against your body. In an accident you could be thrown into it and receive neck or other serious injuries. You could also slide under the lap belt and receive serious internal injuries.

For most effective protection when the vehicle is in motion, the seat should be upright. Always sit well back in the seat and adjust the seat properly. See ‘‘Precautions on Seat Belt Usage’’ later in this chapter.

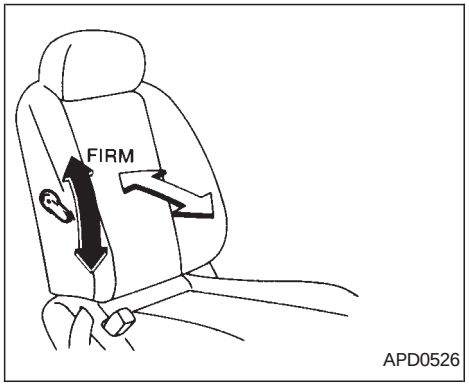

Lumbar support (If so equipped)

The lumbar support feature provides lower back support to the driver. Move the lever up or down to adjust the seat lumbar area.

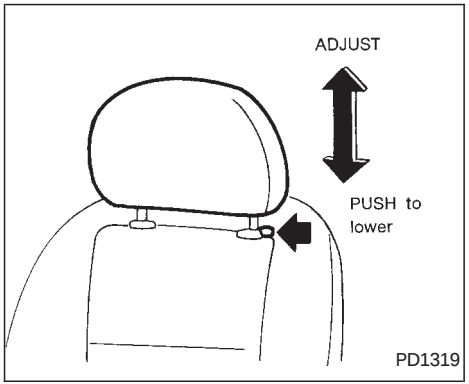

HEAD RESTRAINTS

Adjust the head restraints so the top is level with the tops of your ears.

To raise the head restraint, simply pull it up. To lower, push the lock knob and push the head restraint down.

⚠ WARNING

Head restraints should be adjusted properly as they may provide significant protection against injury in an accident. Do not remove them. Check the adjustment after someone else uses the seat.

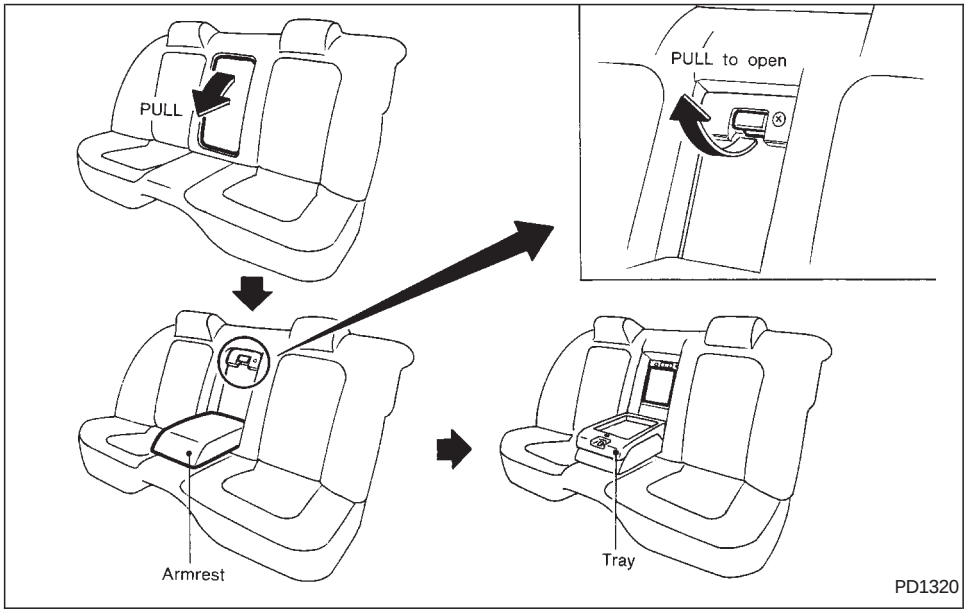

Center armrest and tray

Pull the armrest forward until it is horizontal, then release the lever (inset) and pull the tray forward. With the armrest in this position, you are able to gain access to the trunk.

SUPPLEMENTAL RESTRAINT SYSTEM (AIR BAG SYSTEM)

This Supplemental Restraint System section contains important information concerning the driver and passenger supplemental air bags. The Supplemental Restraint System Air Bag can help reduce impact force to the driver and to the front passenger in certain frontal collisions. The supplemental air bags are designed to **supplement** the crash protection provided by the driver and front passenger seat belts and are **not a substitute** for them. The seat belts should always be correctly worn and the driver and front passenger seated a suitable distance away from the steering wheel and instrument panel. (See ‘‘Seat belts’’ for instructions and precautions on seat belt usage.)

The supplemental air bags operate only when the ignition switch is in the ON or START position.

⚠ WARNING

- **The supplemental air bags ordinarily will not inflate in the event of a side impact, rear impact, roll over, or lower severity frontal collision. Always wear your seat belts to help reduce the risk or severity of injury in various kinds of accidents.**

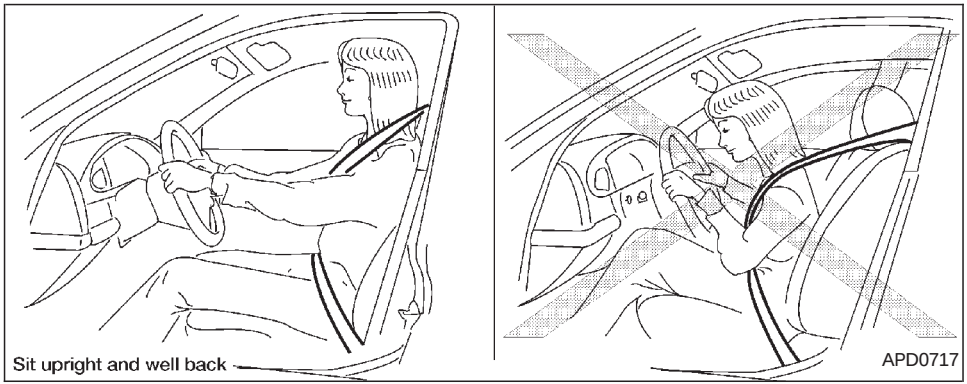

- **The seat belts and the supplemental air bags are most effective when you are sitting back and upright in the seat. Supplemental air bags inflate with great force. If you are unrestrained, leaning forward, sitting sideways or out of position in any way, you are at greater risk of injury or death in a crash and may also receive serious or fatal injuries from the supplemental air bag if you are up against it when it inflates. Always sit back against the seatback and as far away as practical from the steering wheel or instrument panel. Always use the seatbelts.**
- **Keep hands on the outside of the steering wheel. Placing them inside the steering wheel rim could increase the risk that they are injured when the supplemental air bag inflates.**

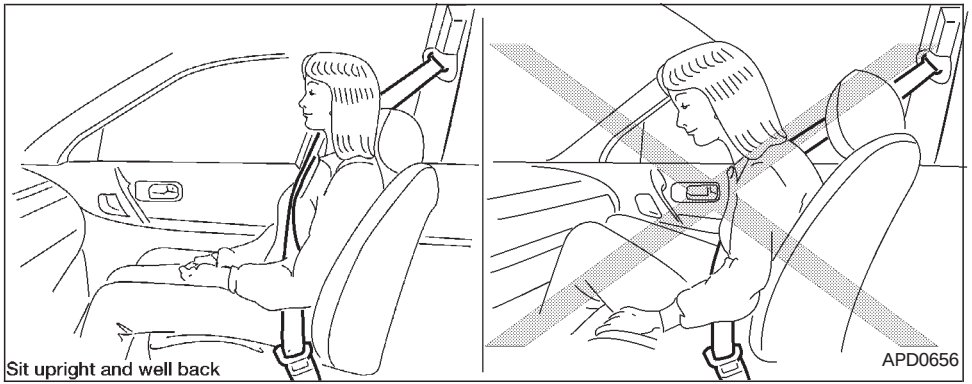
Sit upright and well back
APD0656

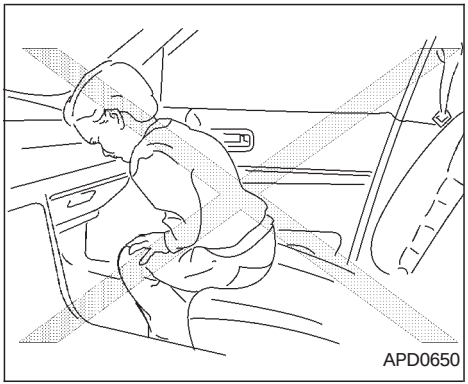
APD0650

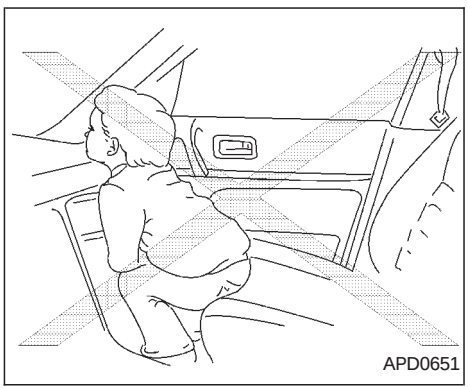
APD0651

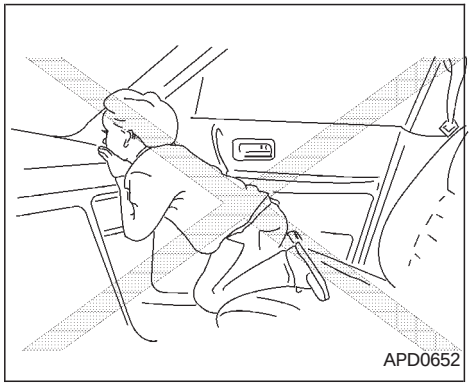

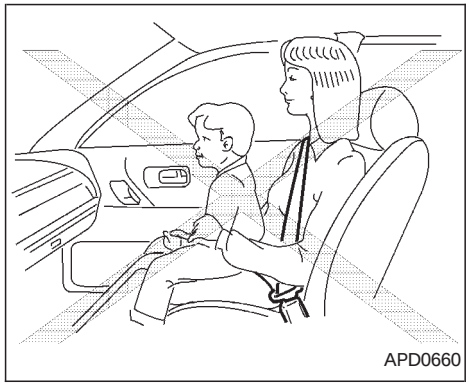

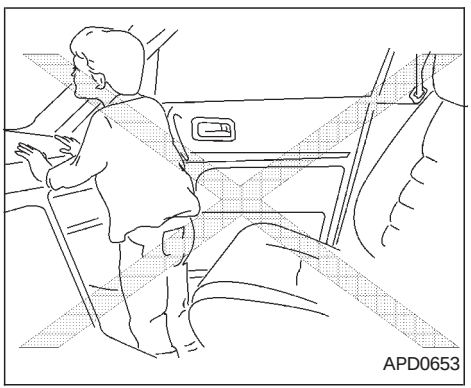

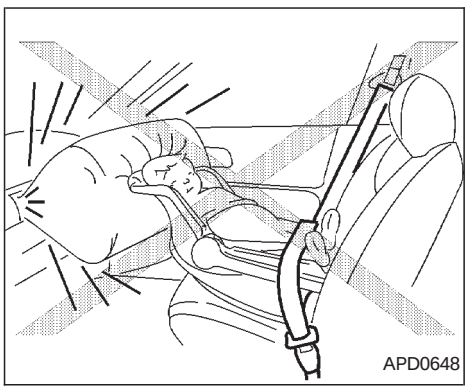

⚠ WARNING

- **Never let children ride unrestrained. Do not attempt to hold them in your lap or arms. Some examples of dangerous riding positions are shown in the previous illustrations.**
- **Children may be severely injured or killed when the supplemental air bag inflates if they are not properly restrained.**
- **Also, never install a rear-facing child restraint in the front seat. An inflating supplemental air bag could seriously injure or kill your child. See ‘‘Child restraints for infants and small children’’ for details.**

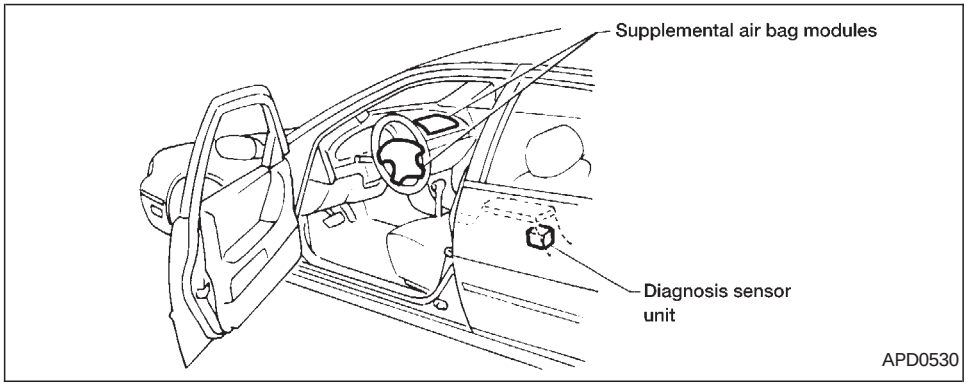

The driver supplemental air bag is located in the center of the steering wheel; the front passenger supplemental air bag is mounted in the dashboard above the glove box. The supplemental air bag system is designed to inflate in higher severity frontal collisions, although it may inflate if the forces in another type of collision are similar to those of a higher severity frontal impact. It may not inflate in certain frontal collisions. Vehicle damage (or lack of it) is not always an indication of proper supplemental air bag operation.

When the supplemental air bag inflates, a fairly loud noise may be heard, followed by the release of smoke. This smoke is not harmful and does not indicate a fire, but care should be taken not to unintentionally inhale it, as it may cause irritation and choking. Those with a history of breathing trouble should get fresh air promptly.

The supplemental air bags, along with the use of seat belts, help to cushion the impact force on the face and chest of the occupant. They can help save lives and reduce serious injuries. However, an inflating supplemental air bag may cause facial abrasions or other injuries. Supplemental air bags do not provide restraint to the lower body.

Seat belts should be correctly worn and the driver and passenger seated upright as far as practical away from the steering wheel or dashboard. Since the supplemental air bag inflates quickly in order to help protect the occupant, the force of the supplemental air bag inflating can increase the risk of injury if the occupant is too close to or is against the supplemental air bag module during inflation.

The supplemental air bag deflates quickly after a collision.

The supplemental air bags operate only when the ignition switch is in the ON or START position.

⚠ WARNING

- **Do not place any objects on the steering wheel pad or on the instrument panel. Also, do not place any objects between any occupant and the steering wheel or instrument panel. Such objects may become dangerous projectiles and cause injury if the supplemental air bag inflates.**
- **Right after inflation, several supplemental air bag system components will be hot. Do not touch them; you may severely burn yourself.**

- **No unauthorized changes should be made to any components or wiring of the supplemental air bag system. This is to prevent accidental inflation of the supplemental air bag or damage to the supplemental air bag system.**
- **Do not make unauthorized changes to your vehicle's electrical system, suspension system or front end structure. This could affect proper operation of the supplemental air bag system.**
- **Tampering with the supplemental air bag system may result in serious personal injury. Tampering includes changes to the steering wheel and the instrument panel assembly by placing material over the steering wheel pad and above the dashboard, or by installing additional trim material around the supplemental air bag system.**
- **Work around and on the supplemental air bag system should be done by an authorized NISSAN dealer. Installation of electrical equipment should also be done by an authorized NISSAN dealer. The yellow SRS wiring should not be modified or disconnected. Unauthorized electrical test equipment and probing devices should not be used on the supplemental air bag system.**
- **The SRS wiring harnesses are covered with yellow insulation either just before the harness connectors or over the complete harness for easy identification.**

When selling your vehicle, we request that you inform the buyer about the supplemental air bag system and guide the buyer to the appropriate sections in this Owner's Manual.

WARNING LABELS

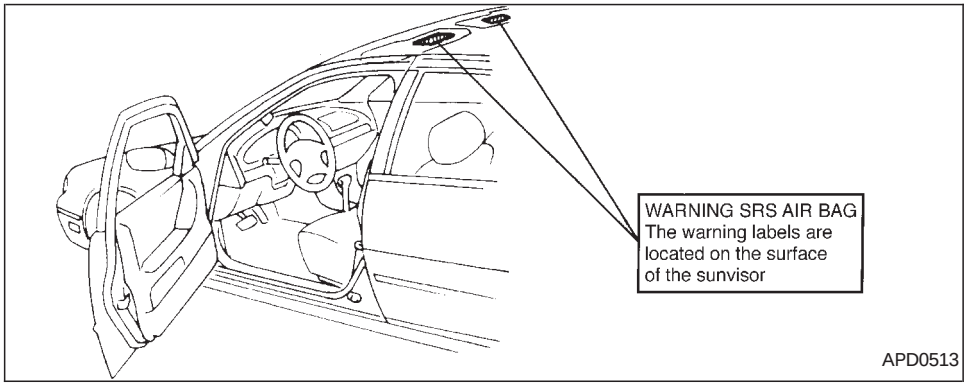

Warning labels about the supplemental air bag system are placed in the vehicle as shown in the illustration.

SUPPLEMENTAL AIR BAG WARNING LIGHT

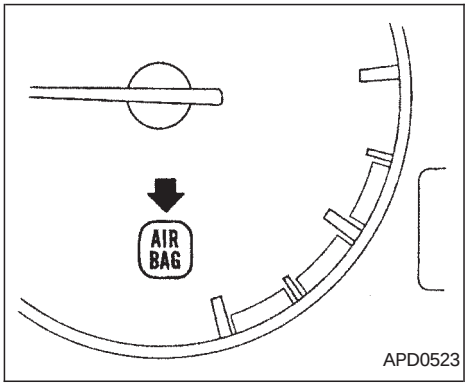

The supplemental air bag warning light, displaying AIR BAG in the instrument panel, monitors the circuits of the supplemental air bag. The circuits monitored by the supplemental air bag light are the diagnosis sensor unit, supplemental air bag modules and all related wiring.

When the ignition key is in the ON or START position, the supplemental air bag warning light illuminates for about 7 seconds and then turns off. This means the system is operational.

If any of the following conditions occur, the supplemental air bag needs servicing:

1. The supplemental air bag light does not come on and remain on for 7 seconds and then go off as described above.
2. The supplemental air bag light flashes intermittently or remains on.
3. The supplemental air bag light does not come on at all.

Under these conditions, the Supplemental Restraint System Air Bag may not operate properly. It must be checked and repaired. Take your vehicle to the nearest authorized NISSAN dealer.

⚠ WARNING

If the supplemental air bag warning light is on, it could mean that the air bag will not operate in an accident.

Repair and replacement procedure

The supplemental air bag system is designed to inflate on a one-time-only basis. As a reminder, unless it is damaged, the supplemental air bag light remains illuminated after inflation has occurred. Repair and replacement of the supplemental air bag system should be done only by an authorized NISSAN dealer.

To ensure long-term functioning, the system must be inspected 10 years after the date of manufacture as noted on the certification label located on the driver side front pillar.

When maintenance work is required on the vehicle, the supplemental air bag system and related parts should be pointed out to the person conducting the maintenance. The ignition key should always be in the LOCK position when working under the hood or inside the vehicle.

⚠ WARNING

- **Once the supplemental air bag inflates, the supplemental air bag module will not function again and should be replaced by an authorized NISSAN dealer. The supplemental air bag module cannot be repaired.**
- **The supplemental air bag system should be inspected by an authorized NISSAN dealer if there is any damage to the front end portion of the vehicle.**
- **If you need to dispose of a supplemental air bag or scrap the vehicle, contact an authorized NISSAN dealer. Correct supplemental air bag disposal procedures are set forth in the appropriate NISSAN Service Manual. Incorrect disposal procedures could cause personal injury.**

PRECAUTIONS ON SEAT BELT USAGE

If you are wearing your seat belt properly adjusted, your chances of being injured or killed in an accident and/or the severity of injury may be greatly reduced. NISSAN strongly encourages you and all of your passengers to buckle up every time you drive, even if your seating position includes a supplemental air bag.

Some states and all Canadian provinces or territories require that seat belts be worn at all times when a vehicle is being driven.

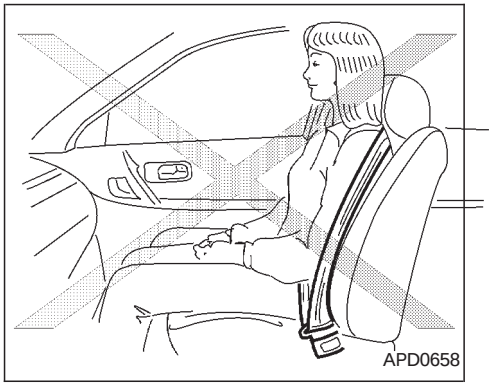

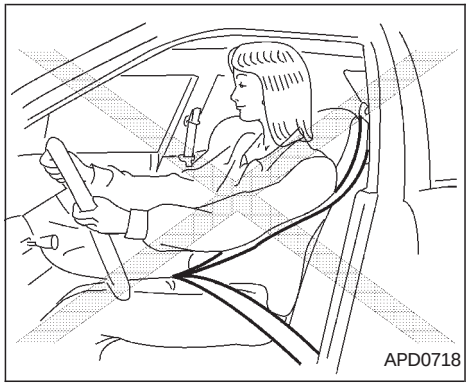

⚠ WARNING

- **Every person who drives or rides in this vehicle should use a seat belt at all times. Children should be properly restrained and, if appropriate, in a child restraint.**
- **The belt should be properly adjusted to a snug fit. Failure to do so may reduce the effectiveness of the entire restraint system and increase the chance or severity of injury in an accident. Serious injury or death can occur if the seat belt is not worn properly.**
- **Always route the shoulder belt over your shoulder and across your chest. Never run the belt behind your back, under your arm or across your neck. The belt should be away from your face and neck, but not falling off your shoulder.**
- **Position the lap belt as low and snug as possible AROUND THE HIPS, NOT THE WAIST. A lap belt worn too high could increase the risk of internal injuries in an accident.**

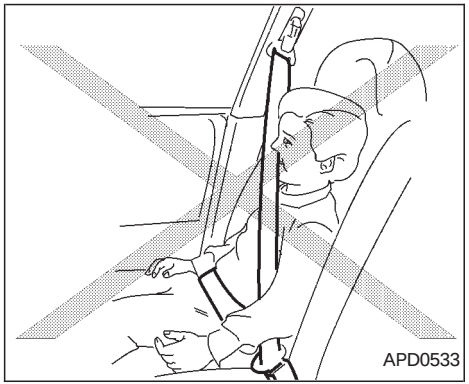

- **Be sure the seat belt tongue is securely fastened to the proper buckle.**
- **Do not wear the belt inside out or twisted. Doing so may reduce its effectiveness.**
- **Do not allow more than one person to use the same belt.**
- **Never carry more people in the vehicle than there are seat belts.**
- **If the seat belt warning light glows continuously while the ignition is turned ON with all doors closed and all seat belts fastened, it may indicate a malfunction in the system. Have the system checked by your NISSAN dealer.**
- **All seat belt assemblies including retractors and attaching hardware should be inspected after any collision at your NISSAN dealer. NISSAN recommends that all seat belt assemblies in use during a collision be replaced unless the collision was minor and the belts show no damage and continue to operate properly. Seat belt assemblies not in use during a collision should also be inspected and replaced if either damage or improper operation is noted.**

CHILD SAFETY

Children need adults to help protect them.

⚠ WARNING

Infants and children need special protection. The vehicle's seat belts may not fit them properly. The shoulder belt may come too close to the face or neck. The lap belt may not fit over their small hip bones. In an accident an improperly fitting seat belt could cause serious or fatal injury. Always use appropriate child restraints.

All U.S. states and provinces of Canada require the use of approved child restraints for infants and small children. (See ''Child Restraints for Infants and Small Children'' later in this section.)

In addition, there are many types of child restraints available for larger children which should be used for maximum protection.

Infant or small child

NISSAN recommends that infants or small children be placed in child restraints that comply with Federal Motor Vehicle Safety Standards or Canadian Motor Vehicle Safety Standards. You should choose a child restraint that fits your vehicle and always follow the manufacturer's instructions for installation and use.

Children

Children who are too large for child restraints should be seated and restrained by the seat belts which are provided.

NISSAN recommends that children sit in the rear seat if possible. According to accident statistics, children are safer when properly restrained in the rear seat than in the front seat.

If the child's seating position has a shoulder belt that fits close to the face or neck, the use of a booster seat (commercially available) may help overcome this. The booster seat should raise the child so that the shoulder belt is properly positioned across the top, middle portion of the shoulder and the lap belt is low on the hips. The booster seat should fit the vehicle seat and have a label certifying that it complies with Federal Motor Vehicle Safety Standards or Canadian Motor Vehicle Safety Standards. Once the child has grown so the shoulder belt is no longer on or near the face and neck, use the shoulder belt without the booster seat.

⚠ WARNING

Never let a child stand or kneel on any seat and do not allow a child in the cargo areas while the vehicle is moving. The child could be seriously injured or killed in an accident.

Pregnant women

NISSAN recommends that pregnant women use seat belts. Contact your doctor for specific recommendations. The lap belt should be worn snug and positioned as low as possible around the hips, not the waist.

Injured persons

NISSAN recommends that injured persons use seat belts. Check with your doctor for specific recommendations.

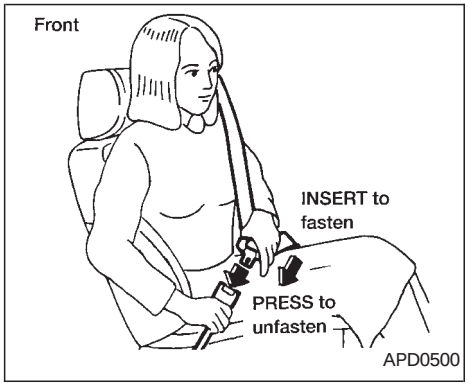

3-POINT TYPE WITH RETRACTOR

WARNING

- **Every person who drives or rides in this vehicle should use a seat belt at all times.**
- **Do not ride in a moving vehicle when the seatback is reclined. This can be dangerous. The shoulder belt will not be against your body. In an accident you could be thrown into it and receive neck or other serious injuries. You could also slide under the lap belt and receive serious internal injuries.**

For most effective protection when the vehicle is in motion, the seat should be upright. Always sit well back in the seat and adjust the seat belt properly.

Fastening the belts

1. Adjust the seat.

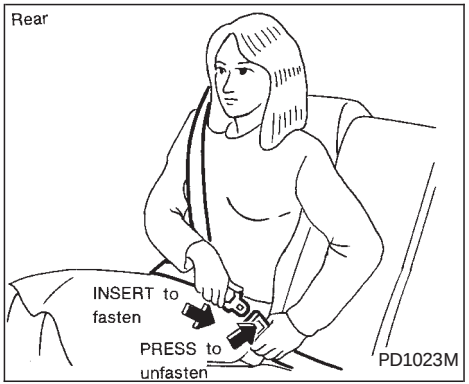

2. Slowly pull the seat belt out of the retractor and insert the tongue into the buckle until it snaps.

The retractor is designed to lock during a sudden stop or on impact. A slow pulling motion permits the belt to move, and allows you some freedom of movement in the seat.

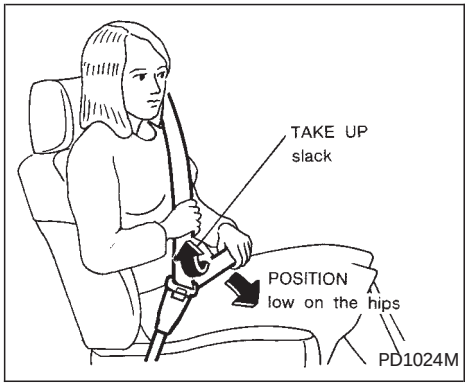

3. Position the lap belt portion **low and snug on the hips** as shown.
4. Pull the shoulder belt portion toward the retractor to take up extra slack.

The front passenger side seat belt and rear 3-point seat belts have a cinching mechanism for child seat installation. It is referred to as the automatic locking mode.

When the cinching mechanism is activated the seat belt cannot be withdrawn further until the seat belt tongue is detached from the buckle and fully retracted. Once retracted, the seat belt is in the emergency locking mode. Refer to ‘‘Child Restraints for Infants and Small Children’’ later in this section for more information.

The automatic locking mode should be used only for child seat installation. During normal seat belt use by a passenger, the locking mode should not be activated. If it is activated it may cause uncomfortable seat belt tension.

Unfastening the belts

To unfasten the belt, press the button on the buckle. The seat belt automatically retracts.

Checking seat belt operation (3-point type with retractor)

Seat belt retractors are designed to lock belt movement using two separate methods:

1) When the belt is pulled quickly from the retractor.
2) When the vehicle slows down rapidly.

To increase your confidence in the belts, check their operation as follows:

- Grasp the shoulder belt and pull quickly forward. The retractor should lock and restrict further belt movement.

If the retractor does not lock during this check or if you have any questions about belt operation, see your NISSAN dealer.

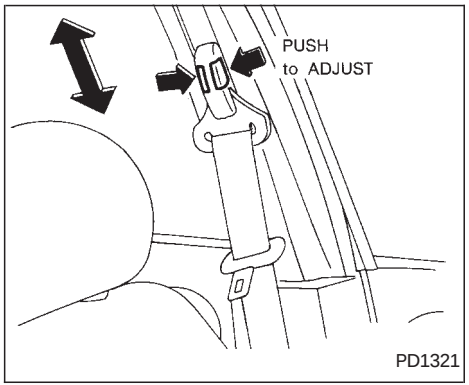

Shoulder belt height adjustment (For front seats)

The shoulder belt anchor height should be adjusted to the position best for you. (See ‘‘Precautions on Seat Belt Usage’’.) To adjust, squeeze the release buttons and move the shoulder belt anchor to the desired position, so the belt passes over the center of the shoulder. The belt should be away from your face and neck, but not falling off of your shoulder.

WARNING

After adjustment, release the buttons and try to move the shoulder belt anchor up and down to make sure it is securely fixed in position.

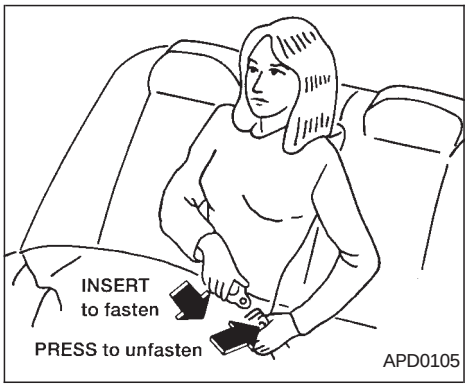

2-POINT TYPE WITHOUT RETRACTOR (center position of rear seat)

Fastening the belts

1. Insert the tongue into the buckle until it snaps. Both the tongue and the buckle are marked CENTER.

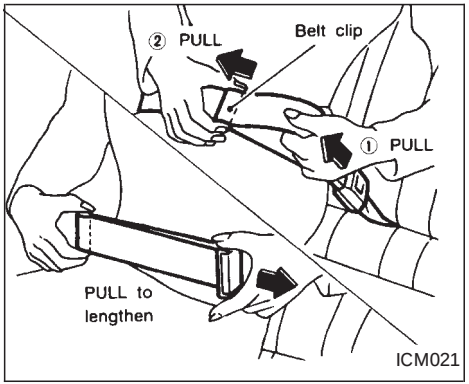

2. To lengthen, hold the tongue at a right angle to the belt and pull on the belt. To shorten, pull the end of the belt attached to the belt clip away from the tongue, then pull the belt clip to take up the slack.

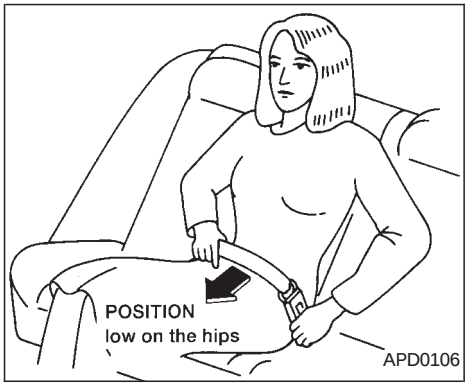

3. Position the lap belt **low and snug on the hips** as illustrated.

Unfastening the belt

To unfasten the belt, press the button on the buckle.

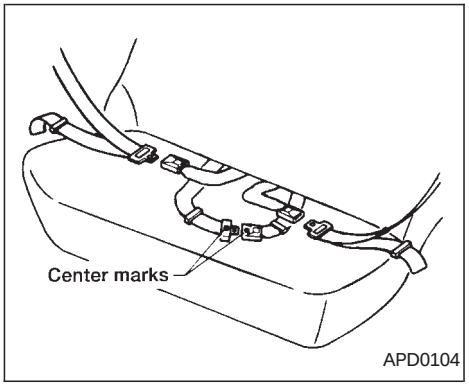

Selecting correct set of belts

The center seat belt buckle and tongue are identified by the CENTER label. The center seat belt tongue can be fastened **only** into the center seat belt buckle.

SEAT BELT EXTENDERS

If, because of body size or driving position, it is not possible to properly fit the lap-shoulder belt and fasten it, an extender is available which is compatible with the installed seat belts. The extender adds approximately 8 inches (200 mm) of length and may be used for either the driver or front passenger seating position. See your NISSAN dealer for assistance if the extender is required.

WARNING

- **Only NISSAN belt extenders, made by the same company which made the original equipment belts, should be used with NISSAN belts.**
- **Persons who can use the standard seat belt should not use an extender. Such unnecessary use could result in serious personal injury in the event of an accident.**

SEAT BELT MAINTENANCE

- **To clean the seat belt webbings,** apply a mild soap solution or any solution recommended for cleaning upholstery or carpets. Then brush the webbing, wipe it with a cloth and allow it to dry in the shade. Do not allow the seat belts to retract until they are completely dry.
- **If dirt builds up on the shoulder belt guide** of the seat belt anchors, the seat belts may retract slowly. Wipe the shoulder belt guide with a clean, dry cloth.
- **Periodically check to see that the seat belt and the metal components,** such as buckles, tongues, retractors, flexible wires and anchors, work properly. If loose parts, deterioration, cuts or other damage on the webbing is found, the entire seat belt assembly should be replaced.

CHILD RESTRAINTS FOR INFANTS AND SMALL CHILDREN

WARNING

- **Infants and small children should always be placed in an appropriate child restraint while riding in the vehicle. Failure to use a child restraint can result in serious injury or death.**
- **Children and infants should never be carried on your lap. It is not possible for even the strongest adult to resist the forces of a severe accident. The child could be crushed between the adult and parts of the vehicle. Also, do not put the same seat belt around both your child and yourself.**
- **Nissan recommends that the child restraint be installed in the rear seat. According to accident statistics, children are safer when properly restrained in the rear seat than in the front seat.**
- **An improperly installed child restraint could lead to serious injury or death in an accident.**

In general, child restraints are designed to be installed with a lap belt or the lap portion of a three point type seat belt.

Child restraints specially designed for infants and small children are offered by several manufacturers. When selecting any child restraint, keep the following points in mind:

1) Choose only a restraint with a label certifying that it complies with Federal Motor Vehicle Safety Standard 213 or Canadian Motor Vehicle Safety Standard 213.
2) Check the child restraint in your vehicle to be sure it is compatible with the vehicle's seat and seat belt system. Choose a child restraint that meets the guidelines of the Society of Automotive Engineers recommended practice J1819 for child restraint installation.
3) If the child restraint is compatible with your vehicle, place your child in the child restraint and check the various adjustments to be sure the child restraint is compatible with your child. Always follow all recommended procedures.

All U.S. states and provinces of Canada require that infants and small children be restrained in approved child restraints at all times while the vehicle is being operated.

WARNING

- **Never install a rear-facing child restraint in the front seat. An inflating air bag could seriously injure or kill your child. A rear-facing child restraint must only be used in the rear seat. See ''Installation on front passenger seat'' for details.**
- **Improper use of a child restraint can result in increased injuries for both the infant or child and other occupants in the vehicle.**
- **Follow all of the child restraint manufacturer's instructions for installation and use. When purchasing a child restraint, be sure to select one which will fit your child and vehicle. It may not be possible to properly install some types of child restraints in your vehicle.**
- **If the child restraint is not anchored properly, the risk of a child being injured in a collision or a sudden stop greatly increases.**
- **Adjustable seatbacks should be positioned to fit the child restraint, but as upright as possible.**
- **After attaching the child restraint, test it before you place the child in it. Tilt it from side to side. Try to tug it forward and check to see if the belt holds the restraint in place. If the restraint is not secure, tighten the belt as necessary, or put the restraint in another seat and test it again.**
- **For a front-facing child restraint, if the seat position where it is installed has a 3-point type lap/shoulder belt, check to make sure the shoulder belt does not go in front of the child's face or neck. If it does, put the shoulder belt behind the child restraint.**
- **When your child restraint is not in use, keep it secured with a seat belt to prevent it from being thrown around in case of a sudden stop or accident.**

CAUTION

- **Remember that a child restraint left in a closed vehicle can become very hot. Check the seating surface and buckles before placing your child in the child restraint.**

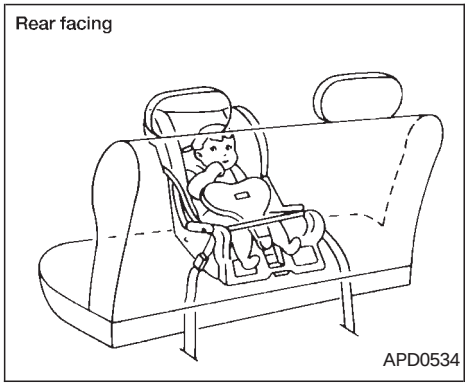

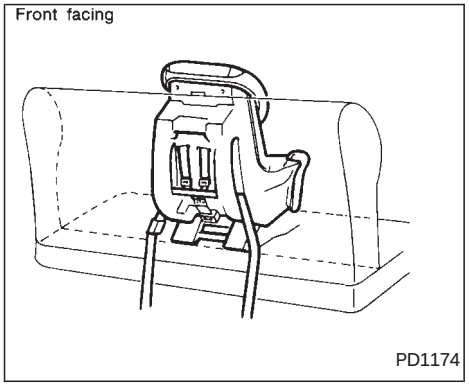

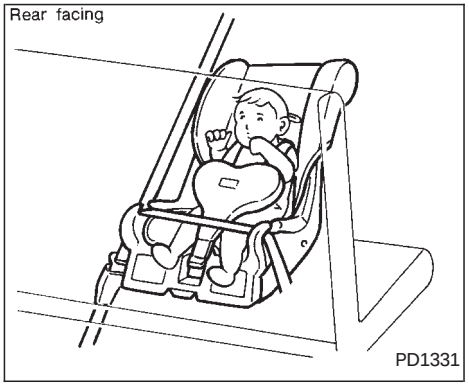

Installation on rear seat

Center lap belt

When you install a child restraint in a rear center seat, follow these steps:

1. Position the child restraint on the seat as illustrated. It can be placed in a forward facing or rear facing direction, depending on the size of the child. Always follow the restraint manufacturer's instructions.
2. Route the seat belt tongue through the child restraint and insert it into the buckle until you hear and feel the latch engage. Be sure to follow the child restraint manufacturer's instructions for belt routing.
3. Remove all slack in the lap belt for a very tight fit by pulling forcefully on the lap belt adjustment.
4. Before placing the child in the child restraint, use force to tilt the child restraint from side to side, and tug it forward to make sure it is securely held in place.
5. If it is not secure, try to tighten the belt again, or put the restraint in another seat.
6. Check to make sure the child restraint is properly secured prior to each use.

Installation on rear outboard seating positions

⚠ WARNING

- **The 3-point belt in your vehicle is equipped with a locking mode retractor which must be used when installing a child restraint.**
- **Failure to do so will result in the child restraint not being properly secured. It could tip over or otherwise be unsecured and cause injury to the child in a sudden stop or collision.**

When you install a child restraint in a rear outboard seat, follow these steps:

1. Position the child restraint on the seat. It can be placed in a forward facing or rear facing direction, depending on the size of the child. Always follow the restraint manufacturer's instructions.
2. Route the seat belt tongue through the child restraint and insert it into the buckle until you hear and feel the latch engage. Be sure to follow the child restraint manufacturer's instructions for belt routing.
3. Pull on the shoulder belt until all of the belt is fully extended and a click is heard. At this time, the belt retractor is in the automatic locking mode (child restraint mode). It reverts back to emergency locking mode when the belt is fully retracted.
4. Allow the belt to retract. A clicking sound is heard as the belt retracts. This indicates that the retractor is in the automatic locking mode. Pull up on the belt to remove any slack in the belt.

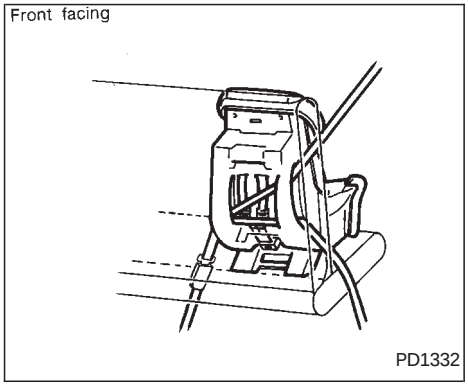

5. Before placing the child in the child restraint, use force to tilt the child restraint from side to side, and tug it forward to make sure it is securely held in place.
6. Check that the retractor is in the automatic locking mode by trying to pull more belt out of the retractor. If you cannot pull any more belt webbing out of the retractor, the belt is in the automatic locking mode.
7. Check to make sure the child restraint is properly secured prior to each use. If the belt is not locked, repeat steps 3 through 6.

After the child restraint is removed and the seat belt is allowed to wind back into the retractor, the automatic locking mode (child restraint mode) is canceled; the seat belt may be used as normal and only locks during a sudden stop or impact.

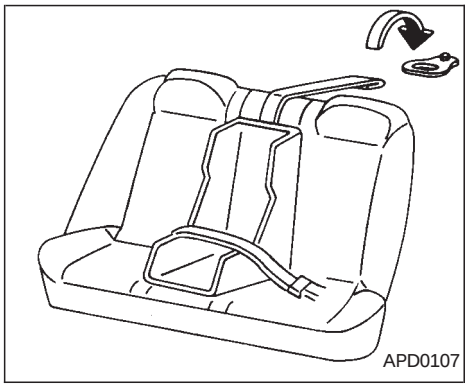

TOP STRAP CHILD RESTRAINT

If your child restraint has a top strap, it must be secured to the provided anchor point. Anchor bracket hardware must be installed. The top strap anchor bracket hardware is available through your NISSAN dealer.

U.S. Part #88894-89900
Canadian Part #88894-89902

Secure the child restraint with the center lap belt or the lap portion of an outboard 3-point belt and latch the top strap hook onto the appropriate anchor bracket. To install the anchor bracket, a metric bolt of the dimensions listed below must be used:

Bolt diameter: 8.0 mm
Bolt length: more than 1.18 in (30 mm)
Thread pitch: 1.25 mm

Secure the top strap to the attaching bolt which provides the straightest installation of the top strap.

WARNING

Child restraint anchor points are designed to withstand only those loads imposed by correctly fitted child restraints. Under no circumstances are they to be used for adult seat belts or harnesses.

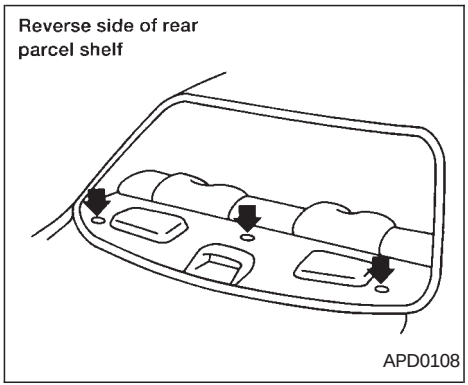

Anchor point locations

Anchor points are located under the rear parcel shelf finisher.

To use attaching hardware for child restraints with top straps, follow these instructions carefully:

1. Open the trunk and find the anchor point nuts on the underside of the rear parcel shelf. Thread a bolt (8.0 mm diameter, 1.25 pitch) up through the nut behind the seating position where the child restraint will be installed and use it to break through the rear parcel shelf support

material. There are pre-cut circles at each anchor point location that should break away from the shelf support material when pressure is applied to them. Remove the bolt after you feel the pre-cut circle separate from the shelf support material.

2. Cut a small slit through the parcel shelf fabric at the anchor point location. Reach through the fabric with a tool such as a pair of needle-nose pliers and remove the pre-cut circle in the parcel shelf support material.
3. Install the bolt through the top strap hook and into the anchor point nut.
4. Be sure to follow all of the instructions that accompany the top strap attaching hardware.

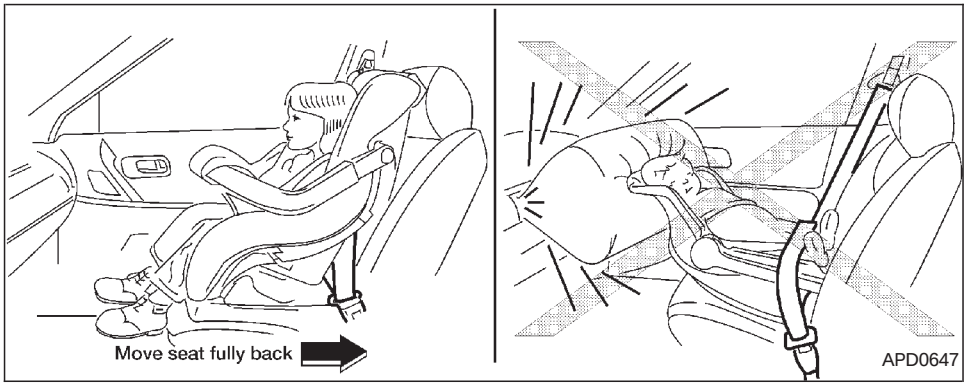

Installation on front passenger seat

WARNING

- **Never install a rear-facing child restraint in the front passenger seat. Supplemental air bags inflate with great force. A rear-facing child restraint could be struck by the supplemental air bag in a crash and could seriously injure or kill your child.**
- **If you install a forward-facing child restraint in the front passenger seat, place the passenger seat as far back as possible.**

A child restraint with a top strap should not be used in the front passenger seat.

WARNING

- **The 3-point belt in your vehicle is equipped with a locking mode retractor which must be used when installing a child restraint.**
- **Failure to use the retractor's locking mode will result in the child restraint not being properly secured. The seat could tip over or otherwise be unsecured and cause injury to the child in a sudden stop or collision.**

When you install a child restraint in the front seat, follow these steps:

1. Position the child restraint on the front passenger seat. **It should be placed in a forward-facing direction only.** Move the seat as far back from the instrument panel as possible. Always follow the child restraint manufacturer's instructions. **Child restraints for infants must be used in the rear-facing direction and therefore must not be used in the front seat.**
2. Route the seat belt tongue through the child restraint and insert it into the buckle until you hear and feel the latch engage.

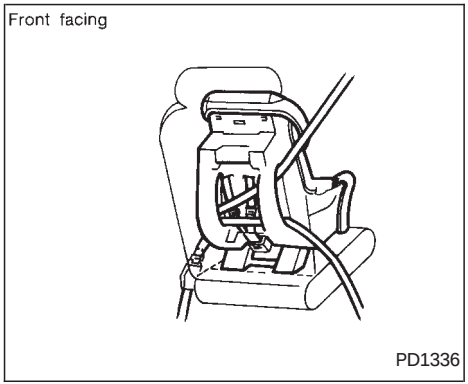

Be sure to follow the child restraint manufacturer's instructions for belt routing.

3. Pull on the shoulder belt until all of the belt is fully extended and a click is heard. At this time, the belt retractor is in the automatic locking mode (child restraint mode). It reverts back to emergency locking mode when the belt is fully retracted.
4. Allow the belt to retract. A clicking sound is heard as the belt retracts. This indicates that the retractor is in the automatic locking mode. Pull up on the belt to remove any slack in the belt.
5. Before placing the child in the child restraint, use force to tilt the child restraint from side to side, and tug it forward to make sure it is securely held in place.
6. Check that the retractor is in the automatic locking mode by trying to pull more belt out of the retractor. If you cannot pull any more belt webbing out of the retractor, the belt is in the automatic locking mode.
7. Check to make sure the child restraint is properly secured prior to each use. If the lap belt is not locked, repeat steps 3 through 6.

After the child restraint is removed and the seat belt is allowed to wind back into the retractor, the automatic locking mode (child restraint mode) is canceled; the seat belt may be used as normal and only locks during a sudden stop or impact.

TILTING STEERING WHEEL

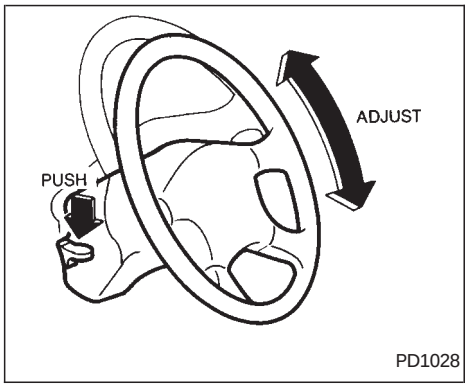

Tilt operation

Push the lock lever down and adjust the steering wheel up or down to the desired position.

Pull the lock lever up firmly to lock the steering wheel in place.

⚠ WARNING

Do not adjust the steering wheel while driving. You could lose control of your vehicle and cause an accident.

OUTSIDE MIRROR REMOTE CONTROL

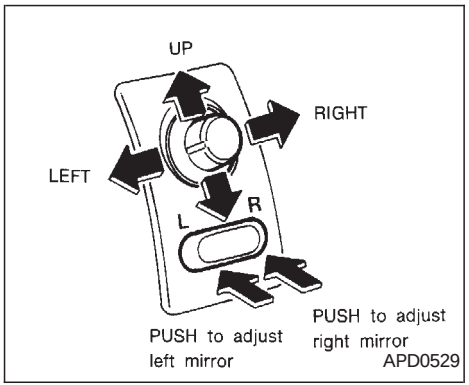

The outside mirror remote control only operates when the ignition switch is in the ACC or ON position.

Push the right or left side of the switch to select the right or left outside mirror, then adjust using the control lever.

⚠ WARNING

Objects viewed in the outside mirror on the passenger side are closer than they appear. Be careful when moving to the right. Using only this mirror could cause an accident. Use the inside mirror or glance over your shoulder to properly judge distances to other objects.

OUTSIDE MIRRORS

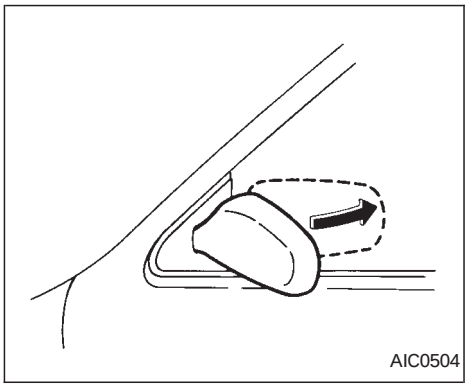

The driver and passenger outside mirrors are foldable. Push the outside mirror backward to fold it.

INSIDE MIRROR

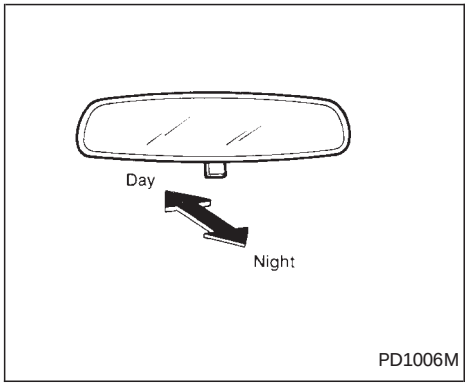

The night position reduces glare from the headlights of vehicles behind you at night.

⚠ WARNING

Use the night position only when necessary, because it reduces rear view clarity.

VANITY MIRROR

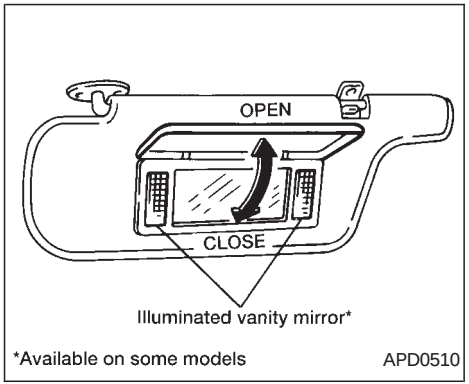

To access the vanity mirror, pull the sun visor down and flip open the mirror cover. Some vanity mirrors are illuminated and turn on when the mirror cover is opened.

3 Heater, air conditioner and audio system

Ventilators 3-2
Heater and air conditioner (manual) 3-2
Controls 3-3
Heater operation 3-3
Air conditioner operation (if so equipped).....3-4
Air flow charts.....3-5
Heater and air conditioner (automatic) (if so equipped) 3-8
Radio 3-11
Clock-radio (if so equipped).....3-11
AM-FM radio with cassette player 3-12
Radio operation.....3-12
Cassette tape operation.....3-14
AM-FM radio with cassette player and compact disc player 3-17
Radio operation.....3-17
Cassette tape operation.....3-19
Compact disc (CD) player operation.....3-21
Antenna 3-22
CB radio or car phone.....3-23

VENTILATORS

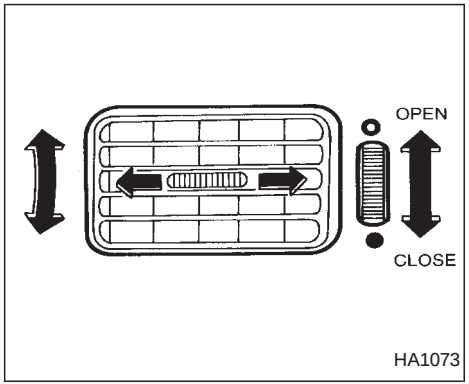

Open or close (side vents only), and adjust the air flow direction of ventilators.

HEATER AND AIR CONDITIONER (MANUAL)

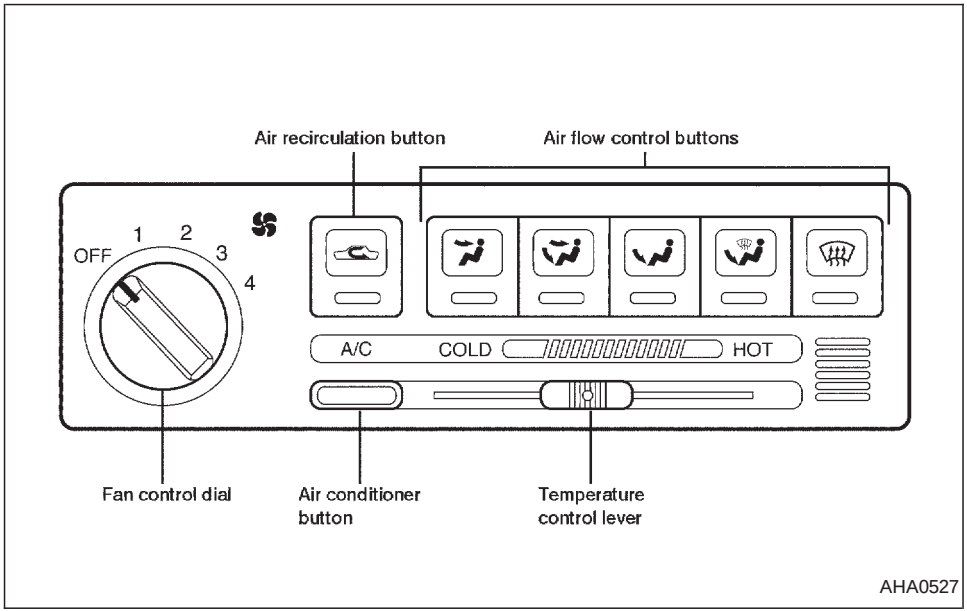

⚠ WARNING

- **The air conditioner cooling function operates only when the engine is running.**
- **Do not leave children, unreliable adults, or pets alone in your vehicle. On hot sunny days, temperatures in a closed vehicle could quickly become high enough to cause severe or possibly fatal injuries to people or animals.**

- **Do not use the recirculation mode for long periods as it may cause the interior air to become stale and the windows to fog up.**
- **Positioning of the heating or air conditioning controls should not be done while driving, in order that full attention may be given to the driving operation.**

CONTROLS

Fan control dial

This dial turns the fan on and off, and controls fan speed.

Air flow control buttons

These buttons allow you to select the air flow outlets.

— Air flows from center and side ventilators.

— Air flows from center and side ventilators and foot outlets.

— Air flows mainly from foot outlets.

— Air flows from defroster outlets and foot outlets.

— Air flows mainly from defroster outlets.

Temperature control lever

This lever allows you to adjust the temperature of the outlet air.

Air recirculation button

Off position:

Outside air is drawn into the passenger compartment and distributed through the selected outlet.

Use the off position for normal heater or air conditioner operation.

On position (Indicator light on):

Interior air is recirculated inside the vehicle.

Push the air recirculation button to the ON position when driving on a dusty road, to avoid traffic fumes, and for maximum cooling when using the air conditioner.

Air conditioner button (If so equipped)

This button is provided only on vehicles equipped with an air conditioner.

Start the engine, move the fan control dial to the desired (1 to 4) position and push the A/C button to turn on the air conditioner. The indicator light comes on when the air conditioner is on. To stop the air conditioner, push the switch again.

The air conditioner cooling function operates only when the engine is running.

HEATER OPERATION

Heating

This mode is used to direct heated air from the foot outlets. Some air also flows from the defroster outlets.

1. Push the air recirculation button to the off position for normal heating.
2. Push the button in.
3. Move the fan control dial to the desired position.
4. Move the temperature control lever to the desired position between the middle and the HOT position.

Ventilation

This mode directs outside air to the side and center ventilators.

1. Push the air recirculation button to the off position.
2. Push the button in.
3. Move the fan control dial to the desired position.
4. Move the temperature control lever to the desired position.

Defrosting or defogging

This mode is used to defrost/defog the windows.

1. Push the button in.
2. Move the fan control dial to the desired position.
3. Move the temperature control lever to the desired position between the middle and the HOT position.

- To quickly remove ice or fog from the windows, turn on the fan control dial to 4 and the temperature control lever to the full HOT position.
- When the switch is pushed, the air conditioner automatically turns on to defog the windshield, and the air recirculation mode automatically turns off.

  Outside air is drawn into the passenger compartment to improve the defogging performance.

Bi-level heating/cooling

This mode directs air from the side, center and foot outlets.

1. Push the air recirculation button to the off position.
2. Push the button in.
3. Move the fan control dial to the desired position.
4. Move the temperature control lever to the desired position.

Heating and defogging

This mode heats the interior and defogs the windshield.

1. Push the button in.
2. Move the fan control dial to the desired position.
3. Move the temperature control lever to the desired position between the middle and the HOT position.

Operating tips

- **Clear snow and ice from the wiper blades and air inlet in front of the windshield. This improves heater operation.**
- When the or switch is selected, the air recirculation mode automatically turns off.

  Outside air is drawn into the passenger compartment to improve the defogging performance.

AIR CONDITIONER OPERATION (If so equipped)

Start the engine, move the fan control dial to the desired (1 to 4) position and push in the A/C button to activate the air conditioner. When the air conditioner is on, cooling and dehumidifying functions are added to the heater operation.

The air conditioner cooling function operates only when the engine is running.

Cooling

This mode is used to cool and dehumidify.

1. Push the air recirculation button to the off position.
2. Push the button in.
3. Move the fan control dial to the desired position.
4. Push on the air conditioner button. The indicator light comes on.
5. Move the temperature control lever to the desired position.

- For quick cooling when the outside temperature is high, push the air recirculation button to the on position. Be sure to return the air recirculation button to the off position for normal cooling.

Dehumidified heating

This mode is used to heat and dehumidify.

1. Push the air recirculation button to the off position.
2. Push the button in.
3. Move the fan control dial to the desired position.
4. Push on the air conditioner button. The indicator light comes on.
5. Move the temperature control lever to the desired position.

Dehumidified defogging

This mode defogs the windows and dehumidifies.

1. Push the button in.
2. Move the fan control dial to the desired position.
3. Push the air conditioner button. The indicator light comes on.
4. Move the temperature control lever to the desired position.

   When the button is pushed, the air conditioner automatically turns on to defog the windshield, and the air recirculation mode automatically turns off.

Outside air is drawn into the passenger compartment to improve the defogging performance.

Operating tips

- Keep the windows and sun roof closed while the air conditioner is in operation.
- After parking in the sun, drive for two or three minutes with the windows open to vent hot air from the passenger compartment. Then, close the windows. This allows the air conditioner to cool the interior more quickly.
- **The air conditioner system should be operated for about ten minutes at least once a month. This helps prevent damage to the system due to lack of lubrication.**
- If the coolant temperature gauge exceeds the H (hot) position, turn the air conditioner off. See ‘‘If your vehicle overheats’’ in the ‘‘In case of emergency’’ section for additional information.

AIR FLOW CHARTS

The charts on the following pages show the switch and lever positions for **MAXIMUM and QUICK** heating, cooling, or defrosting.

Defrosting Defogging

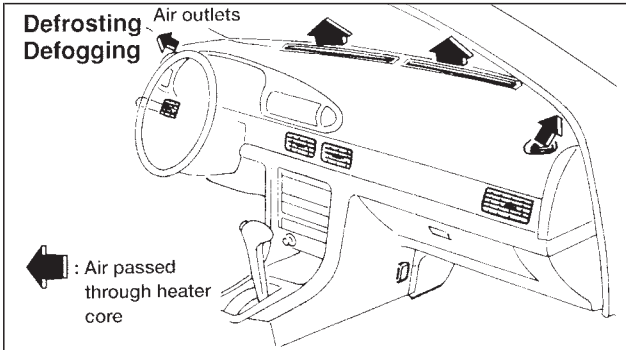

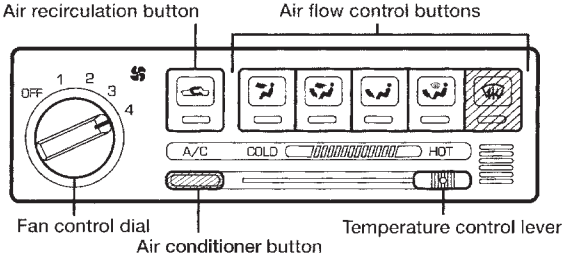

A/C button	Air recirculation	Air control	Temp control	Fan control
ON	OFF	DEF	HOT (RIGHT)	4

Heating

Heated air at center vents

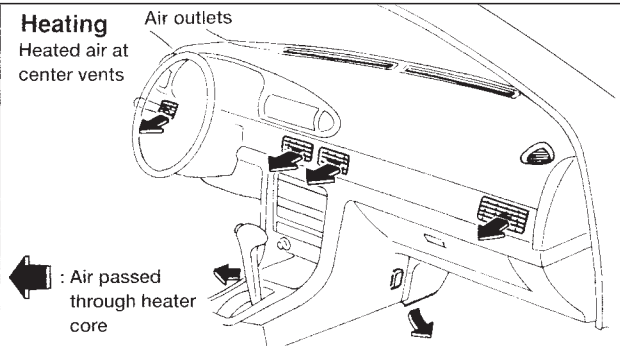

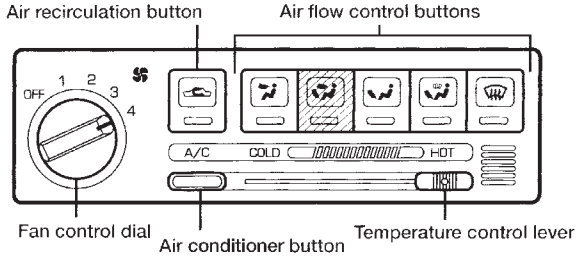

A/C button	Air recirculation	Air control	Temp control	Fan control
OFF	OFF	FOOT & FACE	HOT (RIGHT)	4

AHA0528

Heating

No air at center vents

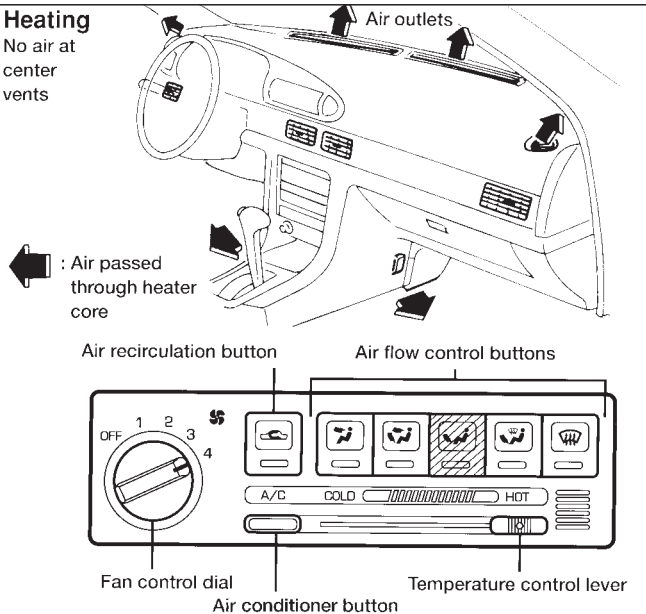

A/C button	Air recirculation	Air control	Temp control	Fan control
OFF	OFF	FOOT	HOT (RIGHT)	4

Cooling

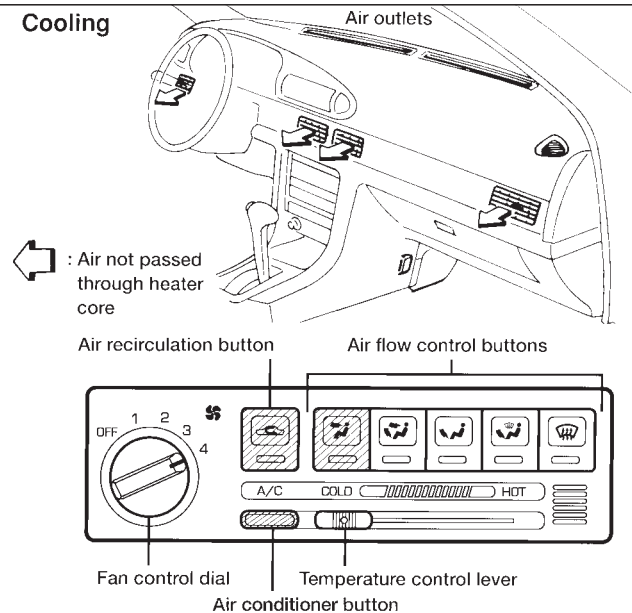

A/C button	Air recirculation	Air control	Temp control	Fan control
ON	ON	FACE	COLD (LEFT)	4

AHA0529

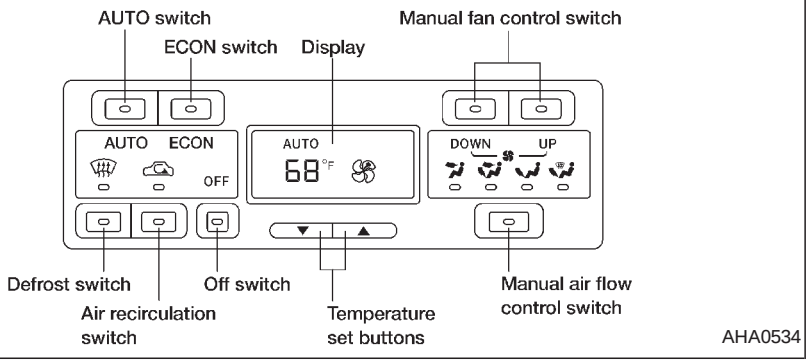

WARNING

- **The air conditioner cooling function operates only when the engine is running.**
- **Do not leave children, unreliable adults, or pets alone in your vehicle. On hot sunny days, temperatures in a closed vehicle could quickly become high enough to cause severe or possibly fatal injuries to people or animals.**
- **Do not use the recirculation mode for long periods as it may cause the interior air to become stale and the windows to fog up.**
- **Positioning of the heating or air conditioning controls should not be done while driving, in order that full attention may be given to the driving operation.**

Controls

Start the engine and operate the controls to activate the climate control system. Push the OFF switch to turn the system off.

The air conditioner cooling function operates only when the engine is running.

Cooling and/or dehumidified heating (AUTO mode)

This mode may be used throughout the year as the system automatically works to maintain the customer-selected temperature. Air flow distribution and fan speed are also controlled automatically.

1. Push the AUTO switch on. AUTO and the previously selected temperature appear in the display.
2. Push the temperature set button ▼ or ▲ to set the desired temperature.

- Adjust the temperature to about 75°F (24°C) for normal operation.
- The temperature of the passenger compartment is maintained automatically. Air flow distribution and fan speed are also controlled automatically.

Heating (ECON mode)

The ECON (economy) mode provides climate control without activating the air conditioner. When only heating of the passenger compartment is desired, use this mode.

1. Push the ECON switch on. ECON appears in the display.
2. Push the temperature set button ▼ or ▲ to set the desired temperature.

- The temperature of the passenger compartment is maintained as selected by the temperature set button. Air flow distribution and fan speed are also controlled automatically in an effort to reach the desired termperature.
- Do not select a temperature setting lower than the outside air temperature. Due to the absence of air conditioner operation, the selected interior temperature may not be reached.
- ECON mode is not recommended if the windows are fogging up. If the windows begin to fog up while using the ECON mode, use the procedures outlined in ‘‘Dehumidified defogging’’.

Dehumidified defogging

1. Push the switch on. The indicator light comes on.
2. Push the temperature set button ▼ or ▲ to set the desired temperature.

- To quickly remove ice or fog from the outside of the windows, push the manual fan control switch and set to the maximum position .
- As soon as possible after the windshield is clean, push the AUTO switch to return to the auto mode.
- When the switch is pushed, the air conditioner automatically turns on at outside temperatures above 35°F (2°C) to defog the windshield, and the air recirculation mode automatically turns off.

  Outside air is drawn into the passenger compartment to improve the defogging performance.

Manual fan speed control

Push the fan control switches to manually control the fan speed. Each fan speed is indicated by the shading of a fan blade on the display. For example, indicates that the fan is operating at low speed and indicates that the fan is operating at medium-high speed.

- Push the AUTO switch to return to automatic control of the fan speed.

Air recirculation switch

Push the air recirculation switch to recirculate interior air inside the vehicle. The indicator light comes on.

Push it again to draw outside air into the passenger compartment. The indicator goes out.

- The air recirculation mode cannot be activated when the mode has been selected.

Manual air flow control

Pushing the manual air flow control switch selects the air outlet.

— Air flows from center and side ventilators.

— Air flows from center and side ventilators and foot outlets.

— Air flows mainly from foot outlets.

— Air flows from defroster outlets and foot outlets.

— Air flows mainly from defroster outlets.

Operating tips

- When the engine coolant temperature and outside air temperature are low, the air flow from the foot outlets may not operate for a maximum of 180 seconds. This is not a malfunction. After the coolant temperature warms up, the air flows from the foot outlets normally.

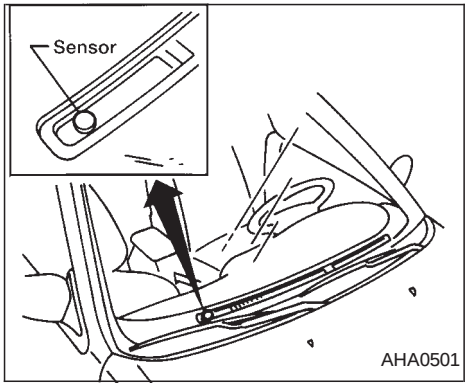

The sensor on the instrument panel helps maintain a constant temperature; do not put anything on or around this sensor.

Servicing air conditioner

The air conditioner system in your NISSAN vehicle is charged with a refrigerant designed with the environment in mind.

This refrigerant does not harm the earth's ozone layer.

Special charging equipment and lubricant is required when servicing your NISSAN air conditioner. Using improper refrigerants or lubricants will cause severe damage to your air conditioner system. See ''Air conditioner system refrigerant and lubricant recommendations'' in the ''Technical and consumer information'' section of this manual.

Your NISSAN dealer is able to service your environmentally conscious air conditioner system.

RADIO

To turn the radio on, turn the ignition key to ACC or ON. If you listen to the radio with the engine not running, turn the key to the ACC position.

Radio reception is affected by station signal strength, distance from radio transmitter, buildings, bridges, mountains and other external influences. Intermittent changes in reception quality normally are caused by these external influences.

CLOCK-RADIO (If so equipped)

On vehicles equipped with an AM-FM radio and cassette player, a clock is integrated into the audio system. For further details, refer to ‘‘Clock Operation’’ later in this section.

AM/FM electronic tuning radio with cassette player

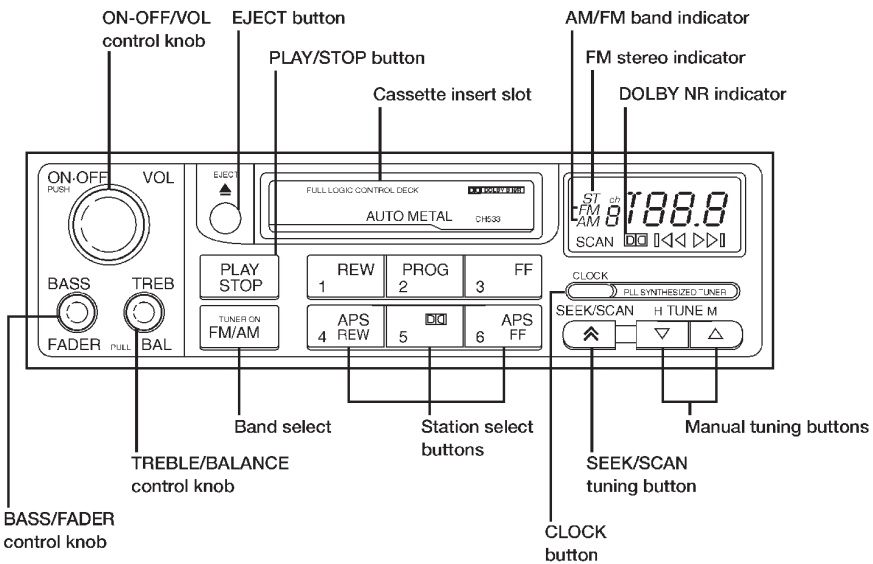

AHA0626

AM-FM RADIO WITH CASSETTE PLAYER

RADIO OPERATION

Push the ON-OFF/VOL knob to turn the radio on. Push the ON-OFF/VOL knob once more to turn the radio off.

Turn the knob to adjust the volume.

Inserting a cassette tape into the cassette player while the radio is on turns the radio off and turns the cassette player on.

Pushing the ON-OFF/VOL knob while a cassette tape is playing turns the cassette player off.

Clock Operation

Pressing the CLOCK button alternates the clock and the radio/cassette tape options in the display.

Clock Set

Depressing the CLOCK and the ▼ buttons together sets hours. Depressing the CLOCK and ▲ buttons together sets minutes.

Clock Priority Mode

In this mode the clock is shown in the display. If any radio or cassette tape functions are activated, the radio (or cassette tape) display illuminates for ten seconds then returns to the clock mode.

NOTE:

After clock adjustment, the radio is in the clock priority mode.

Radio/Cassette Tape Priority Mode

In this mode, the radio station illuminates in the display during radio operation. During cassette tape operation, TAPE illuminates in the display.

Selecting the desired band

Push the band select button (FM/AM) to change from AM to FM reception.

The stereo indicator glows during FM stereo reception. When the stereo broadcast signal is weak, the radio automatically changes from stereo to monaural reception.

Tuning

⚠ WARNING

The radio should not be tuned while driving in order that full attention may be given to the driving operation.

Manual tuning

Push down either manual tuning button ▼ or ▲ .

SEEK tuning

Push the SEEK/SCAN tuning button ⌃⌃ for less than 1.5 seconds. SEEK tuning begins from low to high frequencies and stops at the next broadcasting station. Pushing the button again continues the SEEK function. Once the highest broadcasting station is reached, the radio continues in the SEEK mode at the lowest broadcast station.

SCAN tuning

Push the SEEK/SCAN tuning button ⌃⌃ for more than 1.5 seconds. SCAN illuminates in the display window. SCAN tuning begins from low to high frequencies and stops at each broadcasting station for five seconds. Pushing the button again during this five second period stops SCAN tuning and the radio remains tuned to that station.

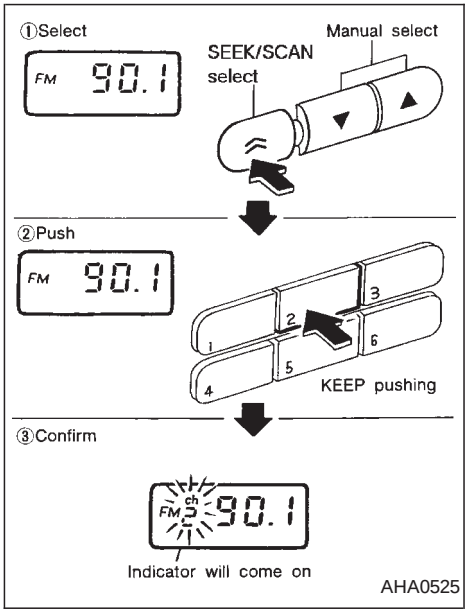

Station memory operations

Six stations can be set for each band.

1. Tune to the desired station.
2. Push the desired select button for more

than 2 seconds. For example, in the diagram ch2 is to be memorized. The radio mutes when the select button is pushed.

3. The indicator, ch2, then comes on in the display and the sound resumes. Memorizing is now complete.
4. Other select buttons can be set in the same manner.

If the battery cable is disconnected, or if the fuse opens, the radio memory is cancelled. In that case, reset the desired stations.

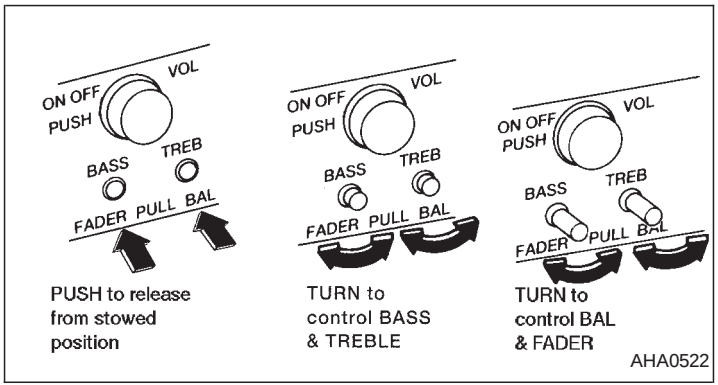

Adjusting tone quality and speaker balance

To adjust BASS, TREB (treble), FADER, and BAL (balance) the control knobs must be released from their stowed positions. Pushing the knobs once moves them to the released position.

In the released position, the knobs control tone quality. Turn the control knobs to adjust BASS and TREB to the most pleasing level.

From the released position, the knobs must be pulled out in order to control FADER and BAL. FADER adjusts the sound level between the front and rear speakers, and BAL adjusts the sound level between the right and left speakers.

Once sound quality is set to the desired levels, return the control knobs to the stowed position by pushing them in completely and releasing.

CASSETTE TAPE OPERATION

Turn the ignition key to ACC or ON, then carefully insert a cassette tape into the tape door.

The cassette tape automatically pulls into the player. The word TAPE and an arrow

indicating tape side illuminates in the display window.

⚠ CAUTION

Do not force the cassette tape into the tape door.

This could cause player damage.

The cassette tape automatically changes directions to play the other side when the first side is complete. At this time, the arrow in the display window changes direction.

- **To maintain good quality sound, NISSAN recommends using cassette tapes of 60 minutes or shorter in length.**
- **Cassette tapes should be removed from the player when not in use. Store cassettes in their protective cases and away from direct sunlight, heat, moisture and magnetic sources.**
- **Direct sunlight can cause the cassette to become deformed. The use of deformed cassettes may cause the cassette to jam in the player.**
- **Do not use cassettes with labels which are peeling and loose. If used, the label could jam in the player.**
- **If a cassette has loose tape, insert a pencil through one of the cassette hubs and rewind the tape firmly around the hubs. Loose tape may cause tape jamming and wavering sound quality.**
- **Over a period of time, the playback head, capstan and pinch roller may collect a tape coating residue as the tape passes over the head. This residue accumulation can cause weak or wavering sound, and should be removed periodically with a head cleaning tape. If the residue is not removed periodically, the player may need to be disassembled for cleaning.**

Fast forwarding or rewinding the tape

Push either the FF (fast forward) or REW (rewind) button for the desired direction.

The ▶▶ or ◀◀ symbol illuminates in the display.

To stop the FF or REW function, press the PLAY/STOP button.

Automatic Program Search (APS) fast forwarding or APS rewinding the tape

Push either the APS FF or APS REW button while the cassette tape is playing. The tape runs quickly, stops, then plays the next selection. The indicator light flashes on and off while searching for the selection. The ▶▶| or |◀◀ symbol illuminates in the display.

This system searches at the blank intervals between selections. If there is a blank interval within one selection or there is no interval between selections, the system may not stop in the desired or expected location.

Changing the direction of tape play

Push the PROG (program) select button. The ▶ or ◀ symbol illuminates in the display to indicate side of program play.

Playing and stopping the cassette tape

Push the PLAY/STOP button while the cassette tape is playing to stop the tape. Push the button again to play the tape.

Dolby NR (noise reduction)

Push the DOLBY NR button for Dolby NR encoded tapes to reduce high frequency tape noise. The indicator light comes on.

Dolby NR is manufactured under license from Dolby Laboratories Licensing Corporation. DOLBY NR and the double-D symbol are trademarks of Dolby Laboratories Licensing Corporation.

If in the clock priority mode when the 5 button is pressed, and TAPE illuminate in the display window for about ten seconds. The clock mode then returns to the display window.

Metal or chrome tape usage

The cassette player is automatically set to high performance play when playing a metal or chrome cassette tape.

Ejecting the cassette tape

Push the EJECT button. The cassette tape automatically comes out.

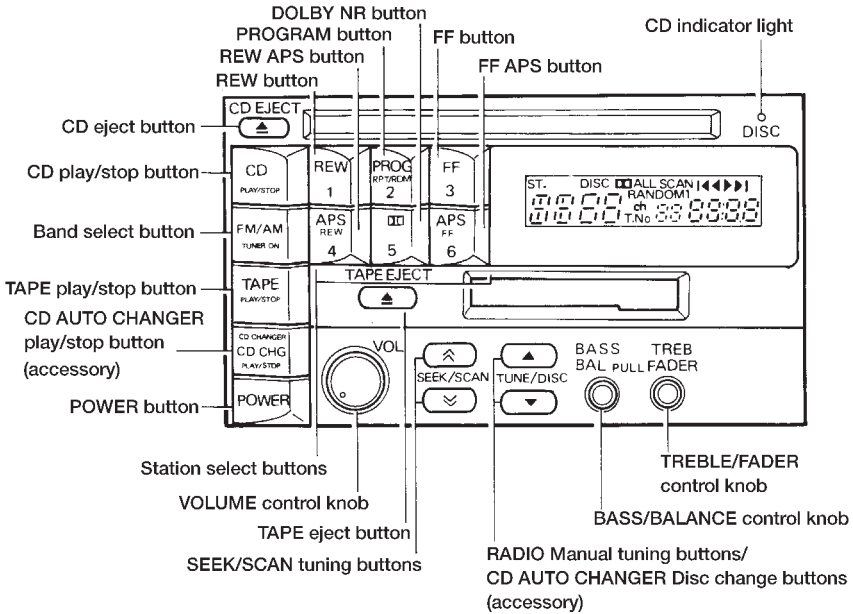

AM-FM RADIO WITH CASSETTE PLAYER AND COMPACT DISC PLAYER

RADIO OPERATION

This radio has an FM Diversity reception system, which employs two antennas. One is a rod type antenna; the other is an antenna printed on the rear window. This system automatically switches to the antenna which is receiving the strongest radio signal.

Power button POWER

Turn the ignition key to ACC or ON, then push the POWER button. The mode (radio, tape or CD) which was playing immediately before the system was turned off resumes playing. When no CD or tape is loaded, the radio comes on. Pushing the POWER button again turns the system off.

VOL (volume) control knob

Turn the VOL control knob to adjust the volume.

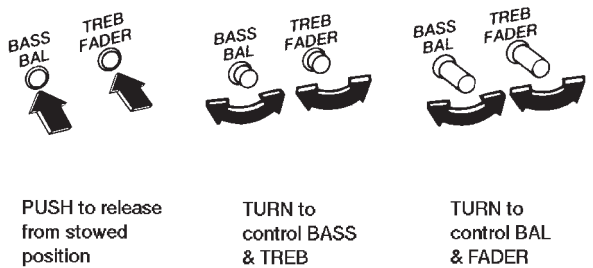

Adjusting tone quality and speaker balance

To adjust BASS, TREB (treble), FADER, and BAL (balance) the control knobs must be released from their stowed positions. Pushing the knobs once moves them to the released position.

In the released position, the knobs control tone quality. Turn the control knobs to adjust BASS and TREB to the most pleasing level.

From the released position, the knobs must be pulled out in order to control FADER and BAL. FADER adjusts the sound level between the front and rear speakers, and BAL adjusts the sound level between the right and left speakers.

Once sound quality is set to the desired levels, return the control knobs to the stowed position by pushing them in completely and releasing.

FM/AM band select button FM / AM

Pushing the FM/AM band select button changes the band.

When the POWER button is pushed while the ignition switch is in the ACC or ON position, the radio comes on at the band and the station last played.

The FM stereo indicator, ST, glows during FM stereo reception. When the stereo broadcast signal is weak, the radio automatically changes from stereo to monaural reception.

TUNE/DISC button ▼ ▲

⚠ WARNING

The radio should not be tuned while driving in order that full attention may be given to the driving operation.

Use these buttons for manual tuning. To move quickly through the channels, hold either of the tuning buttons down for more than 1.5 seconds.

SEEK/SCAN buttons

SEEK tuning

Push the SEEK/SCAN tuning button ⌃ or ⌄ for less than 1.5 seconds. SEEK tuning begins from low to high frequencies or high to low frequencies, depending on which button is pressed, and stops at the next broadcasting station. Once the highest broadcasting station is reached, the radio

continues in the SEEK mode at the lowest broadcasting station. If using the button, once the lowest broadcasting station is reached, the radio continues in the SEEK mode at the highest broadcasting station. Pushing the button again continues the SEEK function.

SCAN tuning

Push the SEEK/SCAN tuning button or for more than 1.5 seconds. SCAN tuning begins from low to high frequencies or high to low frequencies, depending on which button is pressed. SCAN tuning stops at each broadcasting station for five seconds. Pushing the button again during this five second period stops SCAN tuning and the radio remains tuned to that station.

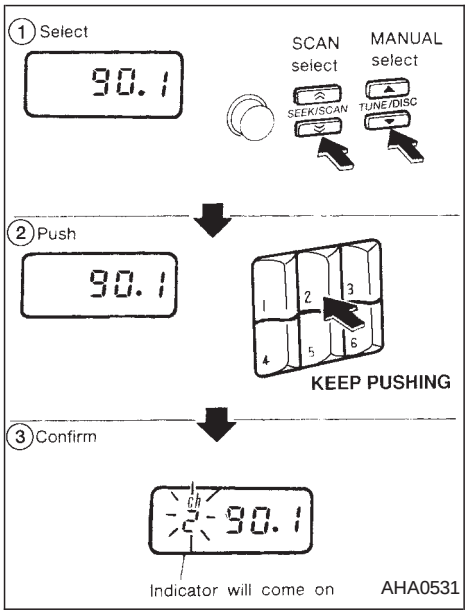

Station memory operations

Six stations can be set for each band.

1. Tune to the desired station.
2. Push the desired select button for more than 3 seconds. For example, in the diagram ch2 is to be memorized. The radio mutes when the select button is pushed.)
3. The indicator, ch2, then illuminates in the display and the sound resumes. Memorizing is now complete.
4. Other buttons can be set in the same manner.

If the battery cable is disconnected, or if the radio fuse opens, the radio memory is cancelled. In that case, reset the desired stations.

CASSETTE TAPE OPERATION

Turn the ignition key to ACC or ON, and lightly insert the cassette tape into the tape door. The cassette tape automatically pulls into the player.

The radio or CD turns off (if it is on) and the cassette tape begins to play.

CAUTION

Do not force the cassette tape into the tape door.

This could cause player damage.

If the system is turned off by pushing the POWER button with the cassette tape still in the player, the tape resumes playing when the POWER button is pushed once again.

TAPE button TAPE

When this button is pushed with the system turned off and a tape loaded, the system comes on and the tape plays.

When this button is pushed with either the radio or compact disc turned on and the tape loaded, the compact disc or the radio automatically turns off and the tape plays.

While the tape is playing, pushing the TAPE button stops tape play. Pushing the button again resumes tape play.

FF (fast forward) and REW (rewind) buttons FF 3 REW 1

Push the FF (fast forward) button to fast forward the tape. Push the REW (rewind) button to rewind the tape. Either the ◀◀ or ▶▶ indicator light comes on when the FF or REW function is started. To stop the FF or REW function, press the TAPE button.

Automatic Program Search (APS) FF and APS REW buttons APS FF 6 APS REW 4

When the APS FF button is pushed while the tape is being played, the next selection starts to play from the beginning. Push the APS FF button several times to skip several selections. The tape advances the number of selections the button is pushed (up to 9 selections).

When the APS REW button is pushed, the selection being played starts over from the beginning. Push several times to fast rewind several selections. The tape rewinds the number of selections the button is pushed.

Either the ▶▶| or |◀◀ indicator light comes on when the APS FF or APS REW function is started.

This system searches for the blank intervals between selections. If there is a blank interval within one selection or there is no interval between selections, the system may not stop in the desired or expected location.

PROG (program) button PROG 2

Push the PROG (program) button to change the tape side while the tape is being played.

The cassette tape automatically changes directions to play the other side when the first side is complete.

Dolby NR (noise reduction) button 5

Push the DOLBY NR button for Dolby NR encoded tapes to reduce high frequency tape noise. The indicator light comes on.

Dolby NR is manufactured under license from Dolby Laboratories Licensing Corporation. DOLBY NR and the double-D symbol are trademarks of Dolby Laboratories Licensing Corporation.

TAPE EJECT button TAPE EJECT

Push this button to eject an inserted tape.

When the tape ejects while playing, the system turns off.

Precautions on cassette player operation

- **To maintain good quality sound, NISSAN recommends using cassette tapes of 60 minutes or shorter in length.**

- **Cassette tapes should be removed from the player when not in use. Store cassettes in their protective cases and away from direct sunlight, heat, moisture or magnetic sources.**
- **Direct sunlight can cause the cassette to become deformed. The use of deformed cassettes may cause the cassette to jam in the player.**
- **Do not use cassettes that have peeling or loose labels. If used, the label could jam in the player.**
- **If a cassette has loose tape, insert a pencil through one of the cassette hubs and rewind the tape firmly. Loose tape may cause jamming and wavering sound quality.**
- **Over a period of time, the playback head, capstan and pinch roller may gather a tape coating residue as the tape passes over the head. This residue accumulation can cause a weak or wavering sound and should be removed periodically with a head cleaning tape. If the residue is not removed periodically, the player may need to be disassembled for cleaning.**

COMPACT DISC (CD) PLAYER OPERATION

Turn the ignition key to the ACC or ON position and insert the compact disc into the slot with the label side facing up. The compact disc is automatically pulled into the slot and starts to play.

If the radio or cassette tape is already operating, it automatically turns off and the compact disc begins to play.

⚠ CAUTION

Do not force the compact disc into the slot. This could damage the player.

If the system is turned off while the compact disc is playing, pushing the POWER button starts the compact disc.

CD button CD

When this button is pushed with the system off and the compact disc loaded, the system turns on and the compact disc starts to play.

When this button is pushed with the compact disc loaded and the tape or the radio playing, the tape or radio automatically turns off and the compact disc starts to play.

When this button is pushed while the compact disc is playing, the compact disc stops playing.

FF (fast forward), REW (rewind) button FF 3 REW 1

When the FF (fast forward) or REW (rewind) button is pushed while the compact disc is playing, the compact disc plays at an increased speed while fast forwarding or rewinding. When the button is released, the compact disc returns to normal play speed.

Automatic Program Search (APS) FF, APS REW button APS FF 6 APS REW 4

When the APS FF button is pushed while the compact disc is playing, the selection following the present one starts to play from its beginning. Push several times to skip several selections. The compact disc advances the number of times the button is pushed. (When the last selection on the compact disc is skipped, the first selection is played.)

When the APS REW button is pushed, the selection being played returns to its beginning. Push several times to skip back several

selections. The compact disc goes back the number of selections the button is pushed.

PROG (program) button

When this button is pushed while listening to the compact disc, the play pattern changes as follows:

ALL: All selections are played repeatedly in sequence.

1: Only one selection (the one playing when the PROG button is pushed) is repeated.

RANDOM: Selections are played at random, not following the sequence on the compact disc. The same program may be repeated twice.

□ (no mark): All selections are played in sequence, and the compact disc stops when the last selection is finished.

When the compact disc is ejected, the play pattern automatically changes to ALL.

CD EJECT button

When the CD EJECT button is pushed with a compact disc loaded, the compact disc ejects.

When this button is pushed while the compact disc is playing, the compact disc ejects and the system turns off.

If the compact disc ejects and is not removed within 10 seconds, it is pulled back into the slot.

CD (DISC) indicator light

This light comes on when a compact disc is loaded into the player.

CAUTION

- **During cold weather or rainy days, the player may malfunction due to the humidity. If this occurs, remove the CD and dehumidify or ventilate the player completely.**
- **The player may skip while driving on rough roads.**
- **The CD player sometimes cannot function when the compartment temperature is extremely high. Decrease the temperature before use.**
- **Do not expose the CD to direct sunlight.**

Power antenna (If so equipped)

The power antenna automatically extends when the radio is turned on, and retracts when the radio is turned off. If the radio is left on, the antenna retracts and extends with the ignition key OFF-ON operation.

CAUTION

- **Before turning the radio on, make sure that there is no one near the antenna outlet and there is enough space for it to extend.**
- **To prevent damage, be sure that antenna is fully retracted before the vehicle enters an automated car wash.**
- **Dirt and other foreign matter on the power antenna rod may interrupt its operation. Clean the rod periodically with a damp cloth. This type of cleaning is especially important during the winter seasons in areas where road salt and other chemicals may be spread on road surfaces and splashed onto the antenna rod.**

Manual antenna

The manual antenna cannot be shortened, but can be removed. When you need to remove the antenna, turn its base counter-clockwise.

Microphone installed model

If equipped with a genuine cellular phone, your NISSAN features a non-directional microphone in the steering column cover, so it is not necessary to look at or speak directly into the microphone when calling. To do so could detract from the driving operation and cause an accident. See the manual for car phone operation

Pre-wired and antenna for phone installed model

Some models are pre-wired to accept the genuine NISSAN cellular phone. In addition, the same model has the phone antenna built into the rear glass window

When installing a CB, ham radio or car phone in your NISSAN, be sure to observe the following cautions, otherwise the new equipment may adversely affect the MFI (Multiport Fuel Injection) system and other electronic parts.

⚠ CAUTION

- **Keep the antenna as far as possible away from the Engine Control Module.**
- **Also keep the antenna wire more than 8 inches (20 cm) away from the MFI harness. Do not route the antenna wire next to any harness.**
- **Adjust the antenna standing-wave ratio as recommended by the manufacturer.**
- **Connect the ground wire from the CB radio chassis to the body.**
- **For details, consult a NISSAN dealer.**

4 Starting and driving

Precautions when starting and driving.....4-2
Exhaust gas (carbon monoxide).....4-2
Three way catalyst.....4-2
Drinking alcohol/drugs and driving.....4-3
Ignition switch.....4-4
Manual transmission.....4-4
Automatic transmission.....4-4
Before starting the engine.....4-5
Driving with automatic transmission.....4-6
Overdrive switch.....4-8
Driving with manual transmission.....4-9
Starting the engine.....4-10
Parking brake operation.....4-11
Cruise control.....4-12
Break-in schedule.....4-14
Increasing fuel economy.....4-14
Parking/parking on hills.....4-15
Power steering system.....4-16
Brake system.....4-16
Anti-lock brake system (ABS)
(if so equipped).....4-17
Cold weather driving.....4-18

⚠ WARNING

Do not leave children, unreliable adults, or pets alone in your vehicle. They could accidentally injure themselves or others through inadvertent operation of the vehicle. Also, on hot, sunny days, temperatures in a closed vehicle could quickly become high enough to cause severe or possibly fatal injuries to people or animals.

EXHAUST GAS (Carbon Monoxide)

⚠ WARNING

Do not breathe exhaust gases; they contain colorless and odorless carbon monoxide. Carbon monoxide is dangerous. It can cause unconsciousness or death.

- **If you suspect that exhaust fumes are entering the vehicle, drive with all windows fully open, and have the vehicle inspected immediately.**
- **Do not run the engine in closed spaces such as a garage.**
- **Do not park the vehicle with the engine running for any extended length of time.**
- **Keep the trunk lid closed while driving, otherwise exhaust gases could be drawn into the passenger compartment. If you must drive in this manner for some reason, take the following steps:**
  1. **Open all the windows.**
  2. **Set the air recirculation switch to off and the fan control at 4 (high) to circulate the air.**
  3. **Be sure the rear seat armrest and tray are closed.**
- **If electrical wiring or other cable connections must pass to a trailer through the seal on the trunk lid or the body, follow the manufacturer's recommendation to prevent carbon monoxide entry into the vehicle.**
- **The exhaust system and body should be inspected by a qualified mechanic whenever:**
  a. **The vehicle is raised for service.**
  b. **You suspect that exhaust fumes are entering into the passenger compartment.**
  c. **You notice a change in the sound of the exhaust system.**
  d. **You have had an accident involving damage to the exhaust system, underbody, or rear of the vehicle.**

THREE WAY CATALYST

The three way catalyst is an emission control device installed in the exhaust system. Exhaust gases in the three way catalyst are burned at high temperatures to help reduce pollutants.

⚠ WARNING

- **The exhaust gas and the exhaust system are very hot. Keep people or flammable materials away from the exhaust pipe.**
- **Do not stop or park the vehicle over flammable materials such as dry grass, waste paper or rags. They may ignite and cause a fire.**

⚠ CAUTION

- **Do not use leaded gasoline. Deposits from leaded gasoline seriously reduce the three way catalyst's ability to help reduce exhaust pollutants.**
- **Keep your engine tuned up. Malfunctions in the ignition, fuel injection, or electrical systems can cause overrich fuel flow into the catalyst, causing it to overheat. Do not keep driving if the engine misfires, or if noticeable loss of performance or other unusual operating conditions are detected. Have the vehicle inspected promptly by an authorized NISSAN dealer.**
- **Avoid driving with an extremely low fuel level. Running out of fuel could cause the engine to misfire, damaging the three way catalyst.**
- **Do not race the engine while warming it up.**
- **Do not push or tow your vehicle to start the engine.**

Avoiding Collision and Rollover

⚠ WARNING

Failure to operate this vehicle in a safe and prudent manner may result in loss of control or an accident.

Be alert and drive defensively at all times. Obey all traffic regulations. Avoid excessive speed, high speed cornering, or sudden steering maneuvers, because these driving practices could cause you to lose control of your vehicle. **As with any vehicle, a loss of control could result in a collision with other vehicles or objects, or cause the vehicle to roll over, particularly if the loss of control causes the vehicle to slide sideways.** Be attentive at all times, and avoid driving when tired. Never drive when under the influence of alcohol or drugs (including prescription or over-the-counter drugs which may cause drowsiness). Always wear your seat belt as outlined in the ''Seat Belts'' section of this manual, and also instruct your passengers to do so.

DRINKING ALCOHOL/DRUGS AND DRIVING

⚠ WARNING

Never drive under the influence of alcohol or drugs. Alcohol in the bloodstream reduces coordination, delays reaction time and impairs judgement. Driving after drinking alcohol increases the likelihood of being involved in an accident injuring yourself and others. Additionally, if you are injured in an accident alcohol can increase the severity of the injury.

Nissan is committed to safe driving. However, you must choose not to drive under the influence of alcohol. Every year thousands of people are injured or killed in alcohol related accidents. Although the local laws vary on what is considered to be legally intoxicated, the fact is that alcohol affects all people differently and most people underestimate the effects of alcohol.

Remember, drinking and driving don't mix!

And that's true for drugs, too (over the counter, prescription, and illegal drugs). Don't drive if your ability to operate your vehicle is impaired by alcohol, drugs, or some other physical condition.

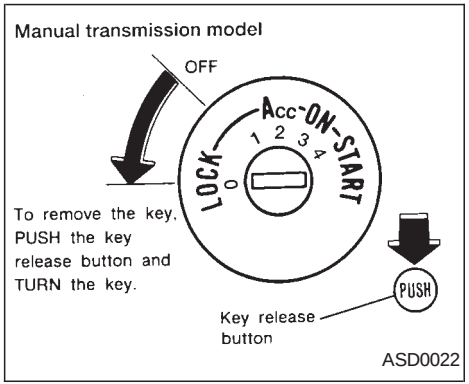

MANUAL TRANSMISSION

The ignition switch includes an anti-theft steering lock device.

The key can only be removed when the ignition switch is in the LOCK position.

On manual transmission models, to turn the ignition key to LOCK from ACC or ON, turn the key to OFF and press in the key release button, then turn the key to LOCK.

In order for the steering wheel to be locked, it must be turned about 1/8 of a turn counterclockwise from the straight up position.

To lock the steering wheel, remove the key. To unlock the steering wheel, insert the key and turn it gently while rotating the steering wheel slightly right and left.

⚠ WARNING

Never remove the key while driving. If the key is removed, the steering wheel will lock. This may cause the driver to lose control of the vehicle and could result in serious vehicle damage or personal injury.

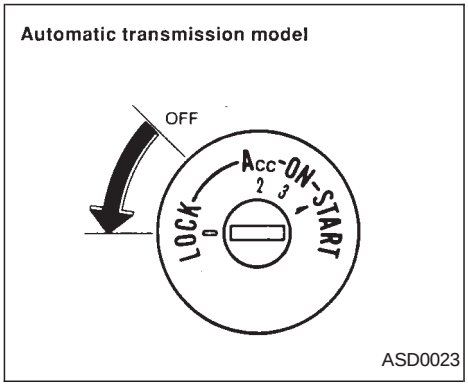

AUTOMATIC TRANSMISSION

On automatic transmission models the ignition lock is designed so the key cannot be turned to LOCK and removed until the shift lever is moved to the P (Park) position.

When removing the key from the ignition, make sure the shift lever is in the P (Park) position.

When the key cannot be turned to the LOCK position, proceed as follows to remove the key:

1) Move the shift lever into the P (Park) position.

2) Turn the ignition key slightly in the ON direction.

3) Turn the key toward the LOCK position.

4) Remove the key.

If the key is removed from the ignition switch, the shift lever cannot be moved from P (Park). **The shift lever can be moved if the ignition switch is in the ACC position. The shift lever can also be moved if the ignition switch is in the ON position and the foot brake pedal is depressed.**

There is an OFF position in between LOCK and ACC, although it does not show on the key cylinder. When the ignition is in OFF the steering wheel is not locked.

In order for the steering wheel to be locked, it must be turned about 1/8 of a turn counterclockwise from the straight up position, and the key must be removed from the ignition.

To lock the steering wheel, remove the key. To unlock the steering wheel, insert the key and turn it gently while rotating the steering wheel slightly right and left.

⚠ WARNING

Never remove the key while driving. If the key is removed, the steering wheel will lock. This may cause the driver to lose control of the vehicle and could result in serious vehicle damage or personal injury.

Key positions

LOCK Normal parking position (0)

OFF (1)

The engine can be turned off without locking the steering wheel.

ACC (Accessories) (2)

This position activates electrical accessories such as the radio when the engine is not running.

ON Normal operating position (3)

This position turns on the ignition system and the electrical accessories.

START (4)

This position activates the starter motor, which starts the engine.

BEFORE STARTING THE ENGINE

- Make sure the area around the vehicle is clear.
- Maintenance items listed here should be checked periodically, for example, each time you check engine oil.
- Check that all windows and lights are clean.
- Visually inspect tires for their appearance and condition. Also check tires for proper inflation.
- Lock all doors.
- Position seat and adjust head restraints.
- Adjust inside and outside mirrors.
- Fasten seat belts and ask all passengers to do likewise.
- Check the operation of warning lights when key is turned to the ON (3) position.

DRIVING WITH AUTOMATIC TRANSMISSION (if so equipped)

The automatic transmission in your vehicle is electronically controlled by the A/T control unit to produce maximum power and smooth operation.

The recommended operating procedures for this transmission are shown on the following pages. Follow these procedures for maximum vehicle performance and driving enjoyment.

Starting the vehicle

- After starting the engine, fully depress the foot brake pedal before shifting the shift lever to the D, R, 2 or 1 position. Be sure the vehicle is fully stopped before attempting to shift the shift lever.
- Keep the foot brake pedal depressed and shift into a driving gear.
- Release the foot brake, then gradually start the vehicle in motion.

The automatic transmission is designed so the foot brake pedal MUST be depressed before shifting from P to any drive position while the ignition switch is ON.

The shift lever cannot be moved out of P and into any of the other gear positions if the ignition key is turned to LOCK or if the key is removed.

When the battery charge is low, the shift lever can be moved if the ignition switch is in the ACC position.

WARNING

- **Do not depress the accelerator pedal while shifting from P or N to R, D, 2 or 1. Always depress the brake pedal until shifting is completed. Failure to do so could cause you to lose control and have an accident.**
- **Cold engine idle speed is high, so use caution when shifting into a forward or reverse gear before the engine has warmed up.**
- **Never shift to P or R while the vehicle is moving. This could cause an accident.**
- **On slippery roads, do not downshift. This may cause a loss of control.**

CAUTION

When stopping the vehicle on an uphill grade, do not hold the vehicle by depressing the accelerator pedal. The foot brake should be used for this purpose.

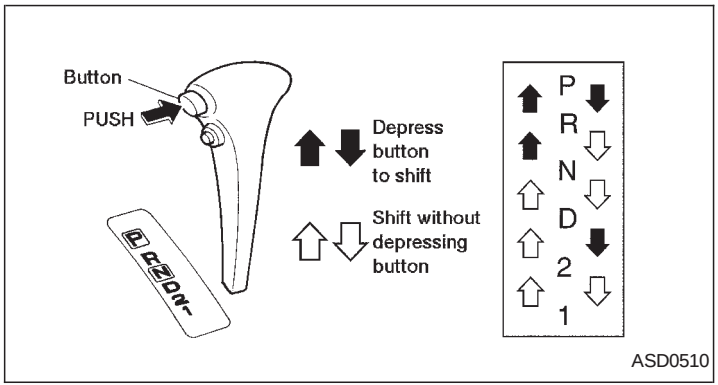

Shifting with automatic transmission

Push the button to shift into P, R or from D to 2. All other positions can be selected without pushing the button.

P (Park):

Use this position when the vehicle is parked or when starting the engine. Always be sure the vehicle is at a complete stop. For maximum safety, depress the brake pedal, then push in the selector lever button and move the shift lever to the P position. Apply the parking brake. When parking on a hill, apply the parking brake first, then move the shift lever into the P position.

Shifting from P (Park)

If the ignition switch is in the ON position and the foot brake pedal is depressed, but the shift lever still cannot be moved out of P (Park), follow these instructions:

1. Shut the engine off and remove the key.
2. Apply the parking brake.
3. Reinsert the key and turn it clockwise to the ACC position.
4. Depress the brake pedal, move the gearshift lever to N (Neutral) and start the engine.

These instructions for starting the vehicle in N (Neutral) should only be used until service can be obtained.

R (Reverse):

Use this position to back up. Always be sure the vehicle is completely stopped. With the brake pedal depressed, push in the selector lever button and move the shift lever to the R position.

N (Neutral):

Neither forward nor reverse gear is engaged. The engine can be started in this position. You may shift to N and restart a stalled engine while the vehicle is moving.

D (Drive):

Use this position for all normal forward driving.

2 (Second gear):

Use for hill climbing or engine braking on downhill grades.

Do not shift into the 2 position at speeds over 74 MPH (119 Km/h). Do not exceed 74 MPH (119 Km/h) in the 2 position.

1 (Low gear):

Use this position when climbing steep hills slowly or driving slowly through deep snow, sand or mud, or for maximum engine braking on steep downhill grades.

Do not shift into the 1 position at speeds over 41 MPH (66 km/h). Do not exceed 41 MPH (66 km/h) in the 1 position.

Accelerator downshift — In D position —

For rapid passing or hill climbing, fully depress the accelerator pedal to the floor. This shifts the transmission down into second gear or first gear, depending on the vehicle speed.

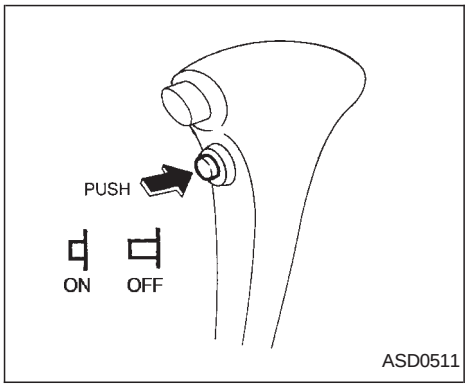

OVERDRIVE SWITCH

ON: For normal driving, push the overdrive switch ON with the selector lever in the D position. The transmission is upshifted into OVERDRIVE as the vehicle speed increases.

The overdrive does not engage until the engine has warmed up.

OFF: For driving up and down long slopes where engine braking would be advantageous, push the switch OFF. When cruising at a low speed or climbing a gentle slope, you may feel uncomfortable shift shocks as the transmission shifts between 3rd and overdrive repeatedly. In this case, set the overdrive switch in the OFF position. The O/D OFF indicator light on the instrument panel comes on at this time.

When driving conditions change, reset the overdrive switch to the ON position.

Remember not to drive at high speeds for extended periods of time with the overdrive switch set in the OFF position. This reduces fuel economy.

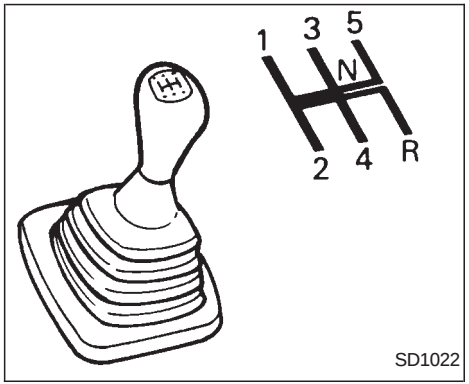

Shifting with manual transmission

To change gears, fully depress the clutch pedal, and then move the gearshift lever. After shifting, release the clutch pedal slowly.

You cannot shift directly from 5th gear into Reverse (R). First shift into Neutral (N), then into Reverse (R).

If it is difficult to move the shift lever into R or 1st, shift into N, then release and depress the clutch pedal again and shift into R or 1st.

WARNING

- **Do not downshift abruptly on slippery roads. This may cause a loss of control.**
- **Do not over-rev the engine when shifting to a lower gear. This may cause a loss of control or engine damage.**

CAUTION

- **Do not rest your foot on the clutch pedal while driving. This may cause clutch damage.**
- **Stop your vehicle completely before shifting into R.**
- **When the vehicle is stopped for a duration, for example at a stop light, shift to N and release the clutch pedal with the foot brake applied.**

Suggested shift-up speeds

Shown below are suggested vehicle speeds for shifting into a higher gear. These suggestions relate to fuel economy and vehicle performance. Actual shift-up speeds will vary according to road conditions, the weather and individual driving habits.

For normal acceleration in low altitude areas (less than 4,000 ft [1,219 m]):

Gear change	ACCEL shift point MPH (km/h)	CRUISE shift point MPH (km/h)
1st to 2nd	15 (24)	15 (24)
2nd to 3rd	25 (40)	18 (29)
3rd to 4th	36 (58)	30 (48)
4th to 5th	40 (64)	39 (63)

For quick acceleration in low altitude areas and high altitude areas (over 4,000 ft [1,219 m]):

Gear change	MPH (km/h)
1st to 2nd	15 (24)
2nd to 3rd	25 (40)
3rd to 4th	40 (64)
4th to 5th	45 (72)

Suggested maximum speed in each gear

Downshift to a lower gear if the engine is not running smoothly, or if you need to accelerate.

Do not exceed the maximum suggested speed (shown below) in any gear. For level road driving, use the highest gear suggested for that speed. Always observe posted speed limits, and drive according to the road conditions, which will ensure safe operation. Do not over-rev the engine when shifting to a lower gear as it may cause engine damage or loss of vehicle control.

Gear	MPH (km/h)
1st	30 (50)
2nd	60 (95)
3rd	90 (145)
4th	–
5th	–

1. Apply the parking brake.
2. **Automatic transmission:**

   Move the shift lever to P (Park) or N (Neutral). (P preferred.)

   The shift lever cannot be moved out of P and into any of the other gear positions if the ignition key is turned to OFF or if the key is removed.

   The starter is designed not to operate if the shift lever is in any of the driving positions.

   Manual transmission:

   Move the gearshift lever to N (Neutral), and depress the clutch pedal to the floor while cranking the engine.

   The starter is designed not to operate unless the clutch pedal is depressed.
3. Crank the engine **with your foot off the accelerator pedal** by turning the ignition key to START. Release the key when the engine starts. If the engine starts, but fails to run, repeat the above procedure.

   — If the engine is very hard to start in extremely cold or hot weather, depress and hold the accelerator pedal to help start the engine.

   — In the summer, when restarting the engine within 30 minutes after it has been stopped, keep the accelerator pedal fully depressed while starting.

⚠ CAUTION

Do not operate the starter for more than 15 seconds at a time. If the engine does not start, turn the key off and wait 10 seconds before cranking again, otherwise the starter could be damaged.

4. **Warm-up**

   Allow the engine to idle for at least 30 seconds after starting. Drive at moderate speed for a short distance first, especially in cold weather.

PARKING BRAKE OPERATION

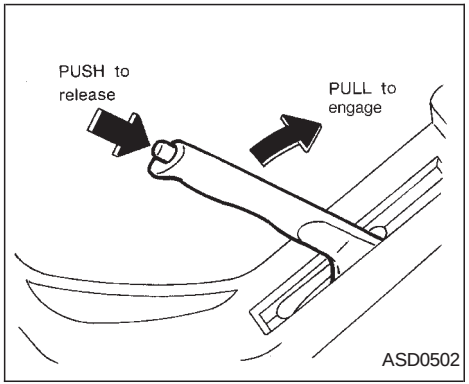

To engage: pull the lever up.

To release:

1. Firmly apply foot brake.
2. Manual transmission models:
   Place the gearshift in the N (neutral) position.
   Automatic transmission models:
   Move the gearshift lever to the P (park) position.
3. While pulling up on the parking brake lever slightly, push the button and lower completely.
4. Before driving, be sure the brake warning light goes out.

⚠ WARNING

- **Be sure the parking brake is fully released before driving. Failure to do so can cause brake failure and lead to an accident.**
- **Do not release the parking brake from outside the vehicle.**
- **Do not use the gear shift in place of the parking brake. When parking, be sure the parking brake is fully engaged.**
- **Do not leave children unattended in a vehicle. They could release the parking brake and cause an accident.**

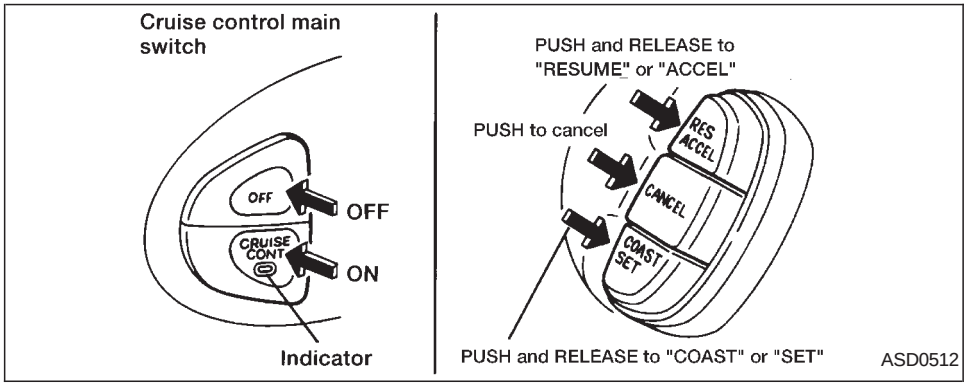

The cruise control allows driving at a speed between 30 to 90 MPH (48 to 144 km/h) without keeping your foot on the accelerator pedal.

To turn on the cruise control, push the main switch. The indicator light on the switch comes on.

To set cruising speed, accelerate your vehicle to the desired speed, push the COAST/SET switch and release it. The CRUISE indicator light comes on. Take your foot off the accelerator pedal. Your vehicle maintains the set speed.

- **To pass another vehicle,** depress the accelerator pedal. When you release the pedal, the vehicle returns to the previously set speed.
- The vehicle may not maintain the set speed when going up or down steep hills. If this happens, drive without the cruise control.

To cancel the preset speed, use one of the following three methods:

a) Push the CANCEL button; the CRUISE light goes out.

b) Tap the brake pedal; the CRUISE light goes out.

c) Turn the main switch off. Both the ON indicator and CRUISE lights go out.

The cruise control is automatically cancelled and the CRUISE light goes out if:

- You depress the brake pedal while pushing the ACCEL set switch.
- The vehicle slows down more than 8 MPH (13 km/h) below the set speed.
- You depress the clutch pedal (manual transmission), or move the shift lever to N (automatic transmission).

To reset at a faster cruising speed, use one of the following three methods:

a) Depress the accelerator pedal. When the vehicle attains the desired speed, push and release the COAST/SET switch.

b) Push and hold the ACCEL set switch. When the vehicle attains the speed you desire, release the switch.

c) Push and quickly release the ACCEL set switch. Each time you do this, the set speed increases by about 1 MPH (1.6 km/h).

To reset at a slower cruising speed, use one of the following three methods:

a) Lightly tap the brake pedal. When the vehicle attains the desired speed, push the COAST/SET switch and release it.

b) Push and hold the COAST/SET switch. Release the switch when the vehicle slows to the desired speed.

c) Push and quickly release the COAST/SET switch. Each time you do this, the set speed decreases by about 1 MPH (1.6 km/h).

To resume the preset speed, push and release the RESUME switch. The vehicle returns to the last set cruising speed when the vehicle speed is over 30 MPH (48 km/h).

Precautions

- If the cruise control system malfunctions, it cancels automatically. The cruise indicator light in the instrument panel then blinks to warn the driver.
- If the cruise indicator light blinks, turn the cruise control main switch off and have the system checked by your NISSAN dealer.
- The cruise indicator light may blink when the cruise control main switch is turned ON while pushing the RES/ACCEL, COAST/SET, or CANCEL switch (located on the steering wheel). To properly set the cruise control system, perform the preceding steps in the order indicated.

⚠ WARNING

Do not use the cruise control when driving under the following conditions:

- **it is not possible to keep the vehicle at a set speed.**
- **in heavy traffic or in traffic that varies in speed.**
- **on winding or hilly roads.**
- **on slippery roads (rain, snow, ice, etc.).**
- **in very windy areas.**

Doing so could cause a loss of vehicle control and result in an accident.

⚠ CAUTION

On manual transmission models, do not shift into neutral without depressing the clutch pedal when the cruise control is on. Should this occur, depress the clutch pedal and turn the main switch off immediately. Failure to do so may cause engine damage.

BREAK-IN SCHEDULE

During the first 1,000 miles (1,600 km), follow these recommendations for the future reliability and economy of your new vehicle. Failure to follow these recommendations may result in vehicle damage or shortened engine life.

- Do not drive over 55 MPH (90 km/h) and do not run the engine over 4,000 rpm. Avoid driving for long periods at constant speed, either fast or slow.
- Do not accelerate at full throttle in any gear.
- Avoid quick starts.
- Avoid hard braking as much as possible.
- Do not tow a trailer for the first 500 miles (800 km).

INCREASING FUEL ECONOMY

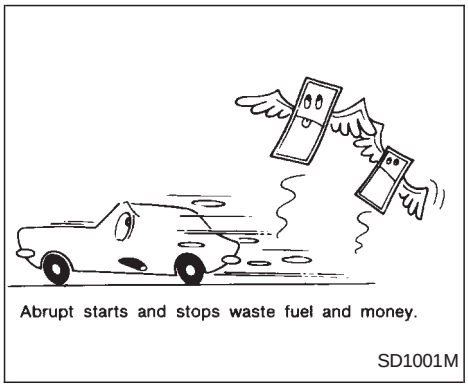

- Accelerate slowly and smoothly. Maintain cruising speeds with a constant accelerator position.
- Drive at moderate speeds on the highway. Driving at high speed lowers fuel economy.
- Avoid unnecessary stopping and braking. Maintain a safe distance behind other vehicles.
- Use a proper gear range which suits road conditions. On level roads, shift into high gear as soon as possible.
- Avoid unnecessary engine idling.
- Keep your engine tuned up.
- Follow the recommended periodic maintenance schedule.
- Keep the tires inflated at the correct pressure. Low pressure increases tire wear and wastes fuel.
- Keep the front wheels in correct alignment. Improper alignment increases tire wear and lowers fuel economy.
- Air conditioner operation lowers fuel economy. Use the air conditioner only when necessary.
- When cruising at highway speeds, it is more economical to use the air conditioner and leave the windows closed to reduce drag.

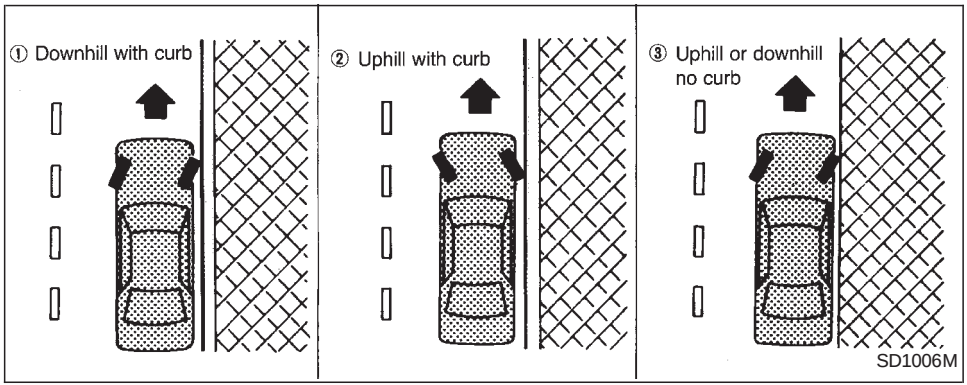

⚠ WARNING

Do not park the vehicle over flammable materials such as dry grass, waste paper or rags. They may ignite and cause a fire.

1. Firmly apply the parking brake.
2. **Manual transmission models:**

   Place the gearshift lever in the R (Reverse) position. When parking on an uphill grade, place the gearshift lever in 1 (First) gear.

   Automatic transmission models:

   Move the gearshift lever to the P (Park) position.

⚠ WARNING

Safe parking procedures require that both the parking brake be set and the transmission placed into P position (automatic) or in the appropriate gear (manual). Failure to do so could cause the vehicle to move unexpectedly or roll away and result in an accident. Make sure the shift lever has been pushed as far forward as it can go and cannot be moved without depressing the button at the end of the lever.

3. To help prevent the vehicle from rolling into traffic when parked on an incline, it is a good practice to turn the wheels as illustrated.

- HEADED DOWNHILL WITH CURB: ①

  Turn the wheels into the curb and move the vehicle forward until the curb side wheel gently touches the curb.

- HEADED UPHILL WITH CURB: ②

  Turn the wheels away from the curb and move the vehicle back until the curb side wheel gently touches the curb.

- HEADED UPHILL OR DOWNHILL, NO CURB: ③

  Turn the wheels toward the side of the road so the vehicle will move away from the center of the road if it moves.

4. Turn the ignition key to the LOCK position and remove the key.

POWER STEERING SYSTEM

⚠ WARNING

- **Never leave the engine running while the vehicle is unattended.**
- **Never leave children unattended in the vehicle.**

The power assisted steering is designed to use a hydraulic pump, driven by the engine, to assist steering.

If the engine stops or drive belt breaks, you will still have control of the vehicle. However, much greater steering effort is needed, especially in sharp turns or at low speeds.

BRAKE SYSTEM

The brake system has two separate hydraulic circuits. If one circuit develops a problem, you will still have braking at two wheels.

Vacuum assisted brake

The brake booster aids braking by using engine vacuum. If the engine stops, you can stop the vehicle by depressing the brake pedal. However, greater foot pressure on the brake pedal will be required to stop the vehicle and the stopping distance will be longer.

Wet brakes

When the vehicle is washed or driven through water, the brakes may get wet. As a result, your braking distance will be longer and the vehicle may pull to one side during braking.

To dry brakes, drive the vehicle at a safe speed while lightly pressing the brake pedal to heat-up the brakes. Do this until the brakes return to normal. Avoid driving the vehicle at high speeds until the brakes function correctly.

Using the brakes

Avoid resting your foot on the brake pedal

while driving. This overheats the brakes, increases wear on the brake linings and pads, and reduces gas mileage.

To help save the brakes and to prevent the brakes from overheating, reduce speed and downshift to a lower gear before going down a slope or long grade. Overheated brakes may reduce braking performance and could result in loss of vehicle control.

WARNING

While driving on a slippery surface, be careful when braking, accelerating or downshifting. Abrupt braking or accelerating could cause the wheels to skid and result in an accident.

ANTI-LOCK BRAKE SYSTEM (ABS) (If so equipped)

The anti-lock brake system installed in some models controls the brakes at each wheel so the wheels do not lock when braking abruptly or when braking on slippery surfaces. The system detects the rotation speed at each wheel and varies the brake fluid pressure to prevent each wheel from locking and sliding. By preventing wheel lockup, the system helps the driver maintain steering control and helps to minimize swerving and spinning on slippery surfaces.

Using the System

Depress the brake pedal and hold it down.

WARNING

Do not pump the brake pedal. Doing so may result in increased stopping distances.

Normal operation

The anti-lock brake system does not operate at speeds below 3 to 6 MPH (5 to 10 km/h) to completely stop the vehicle. (The speeds vary according to road conditions.) When the anti-lock system senses that one or more wheels are close to locking up, the actuator (under the hood) rapidly applies and releases hydraulic pressure (like pumping the brakes very quickly). While the actuator is working, you may feel a pulsation in the brake pedal and hear a noise or vibration from the actuator under the hood. This is normal and indicates that the anti-lock system is working properly. However, the pulsation may indicate that road conditions are hazardous and extra care is required while driving.

Self-test feature

The anti-lock brake system is sophisticated, with electronic sensors, electric pumps, and hydraulic solenoids controlled by a computer. The computer has a built-in diagnostic feature that tests the system each time you start the engine and move the vehicle at a low speed in forward or reverse. When the self-test occurs, you may hear a ‘‘clunk’’ noise and/or feel a pulsation in the brake pedal. This is normal and is not an indication of any malfunction. If the computer senses any malfunction, it switches the anti-lock brake system OFF and turns on the ABS brake warning light in the dashboard. The brake system then operates normally, but without anti-lock assistance.

If the light comes on during the self-test or while you are driving, you should take your car to your NISSAN dealer for repair at your earliest convenience.

⚠ WARNING

The anti-lock brake system is a sophisticated device, but it cannot prevent accidents resulting from careless or dangerous driving techniques. It can help maintain vehicle control during braking on slippery surfaces, but remember that the stopping distance on slippery surfaces will be longer than on normal surfaces, even with the anti-lock system. Stopping distances may also be longer on rough, gravel or snow covered roads, or if you are using tire chains. Always maintain a safe distance from the vehicle in front of you. Ultimately, the responsibility for safety of self and others rests in the hands of the driver.

Tire type and condition of tires may also affect braking effectiveness.

- **When replacing tires, install the specified size of tire on all 4 wheels.**
- **When installing a spare tire, make sure it is the proper size and type as specified on the tire placard. For tire placard location information, refer to "Tire placard" in the Owner's Manual index.**

Refer to ''Wheels and Tires'' in the ''Do-it-yourself operations'' section of this manual.

Freeing a frozen door lock

To prevent a door lock from freezing, apply de-icer or glycerin through the key hole. If the lock becomes frozen, heat the key before inserting it into the key hole.

Anti-freeze

In the winter when it is anticipated that the temperature will drop below 32°F (0°C), check the anti-freeze (ethylene glycol base) to assure proper winter protection. For details, see ''Engine cooling system'' in the ''Do-it-yourself operations'' section.

Battery

If the battery is not fully charged during extremely cold weather conditions, the battery fluid may freeze and damage the battery. To maintain maximum efficiency, the battery should be checked regularly. For details, see ''Battery'' in the ''Do-it-yourself operations'' section.

Draining of coolant water

If the vehicle is to be left outside without anti-freeze, drain the cooling system by opening the drain valves located under the radiator and on the engine block. Refill

before operating the vehicle. See ‘‘Changing engine coolant’’ in the ‘‘Do-it-yourself operations’’ section.

Tire equipment

1. SUMMER tires have a tread designed to provide superior performance on dry pavement. However, the performance of these tires will be substantially reduced in snowy and icy conditions. If you operate your vehicle on snowy or icy roads, NISSAN recommends the use of MUD & SNOW or ALL SEASON tires on all four wheels. Please consult your NISSAN dealer for the tire type, size, speed rating and availability information.
2. For additional traction on icy roads, studded tires may be used. However, some provinces and states prohibit their use. Check local, state and provincial laws before installing studded tires.

Skid and traction capabilities of studded snow tires, on wet or dry surfaces, may be poorer than that of non-studded snow tires.

3. Tire chains may be used if desired. Make sure they are the proper size for the tires on your vehicle and are installed according to the chain manufacturer’s suggestions.

Use of tire chains may be prohibited according to location. Check the local laws before installing tire chains. When installing tire chains, make sure they are the proper size for the tires on your vehicle and are installed according to the chain manufacturer’s suggestions. **Use only SAE Class ‘‘S’’ chains.** Other types may damage your vehicle. Use chain tensioners when recommended by the tire chain manufacturer to ensure a tight fit. Loose end links of the tire chain must be secured or removed to prevent the possibility of whipping action damage to the fenders or underbody. If possible, avoid fully loading your vehicle when using tire chains. In addition, drive at a reduced speed. Otherwise, your vehicle may be damaged and/or vehicle handling and performance may be adversely affected.

Never install tire chains on T-type spare tires. Do not use tire chains on dry roads.

Special winter equipment

It is recommended that the following items be carried in the vehicle during winter:

1. A scraper and stiff-bristled brush to remove ice and snow from the windows and wiper blades.
2. A sturdy, flat board to be placed under the jack to give it firm support.
3. A shovel to dig the vehicle out of snowdrifts.
4. Extra window washer fluid to refill the reservoir tank.

Driving on snow or ice

⚠ WARNING

- **Wet ice (32°F, 0°C and freezing rain), very cold snow or ice can be slick and very hard to drive on. The vehicle will have a lot less traction or ‘‘grip’’ under these conditions. Try to avoid driving on wet ice until the road is salted or sanded.**
- **Whatever the condition, drive with caution. Accelerate and slow down with care. If accelerating or down-**

shifting too fast, the drive wheels will lose even more traction.

- **Allow more stopping distance under these conditions. Braking should be started sooner than on dry pavement.**
- **Allow greater following distances on slippery roads.**
- **Watch for slippery spots (glare ice). These may appear on an otherwise clear road in shaded areas. If a patch of ice is seen ahead, brake before reaching it. Try not to brake while actually on the ice, and avoid any sudden steering maneuvers.**
- **Do not use the cruise control on slippery roads.**
- **Snow can trap dangerous exhaust gases under your vehicle. Keep snow clear of the exhaust pipe and from around your vehicle.**

Engine block heater/Engine heater (if so equipped)

An engine block heater/engine heater to assist extreme cold temperature starting is available through your NISSAN dealer.

WARNING

Do not use your heater with an ungrounded electrical system or two-pronged (cheater) adapters. You can be injured by an electrical shock if you use an ungrounded connection.

5 In case of emergency

Flat tire 5-2
Jump starting.....5-7
Push starting 5-9
If your vehicle overheats.....5-9
Tow truck towing 5-10
Vehicle recovery (freeing a stuck vehicle).....5-12

If you have a flat tire, follow the instructions below:

Stopping the vehicle

1. Safely move the vehicle off of the road and away from traffic.
2. Turn on the hazard warning flashers.
3. Park on a level surface and apply the parking brake. Shift the manual transmission into Reverse (R), or the automatic transmission into P (Park).
4. Turn off the engine.
5. Raise the hood to warn other traffic, and to signal professional road assistance personnel that you need assistance.
6. Have all passengers get out of the vehicle and stand in a safe place, away from traffic and clear of the vehicle

⚠ WARNING

- **Make sure that the parking brake is securely applied and the manual transmission is shifted into Reverse (R), or the automatic transmission into P (Park).**
- **Never change tires when the vehicle is on a slope, ice or slippery areas. This is hazardous.**
- **Never change tires if oncoming traffic is close to your vehicle. Wait for professional road assistance.**

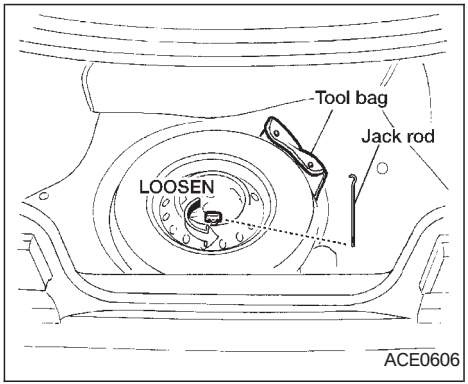

Getting the spare tire and tools

1. Open the trunk. Lift the trunk floor carpeting and spare tire cover. Remove the tool bag and the spare tire. Use either end of the jack rod (found in the tool bag) to loosen the spare tire hold-down bolt.
2. Push the release clip on the jack access door, and pull the door open. To remove the jack, turn the jack screw counterclockwise. Use either end of the jack rod (found in the tool bag) to loosen the jack from its storage position.

3. When the spare tire is installed on the vehicle, place the damaged tire in the storage area. Put the jack rod in the tool bag and place the tool bag in the storage area.
4. Place the spare tire cover and the trunk floor carpeting over the damaged tire.
5. Install the jack in its storage area and tighten the jack screw.
6. Close the jack access door. Close the trunk.

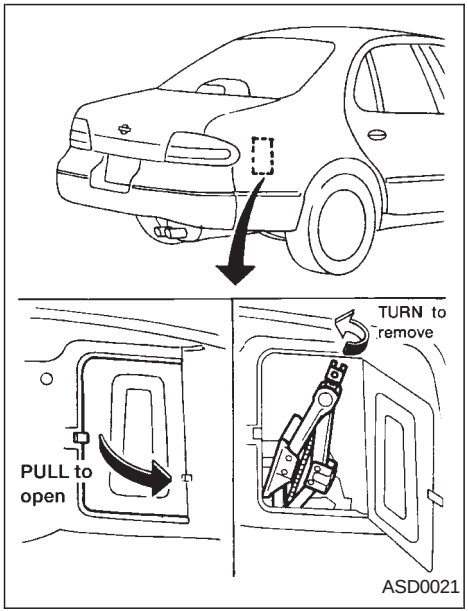

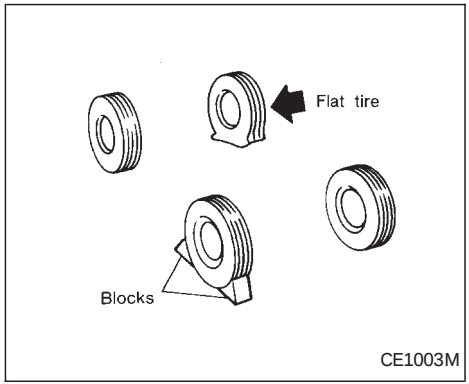

Blocking wheels

Place suitable blocks at both the front and back of the wheel diagonally opposite the flat tire to prevent the vehicle from rolling when it is jacked up.

⚠ WARNING

Be sure to block the wheel as the vehicle may move and could cause personal injury.

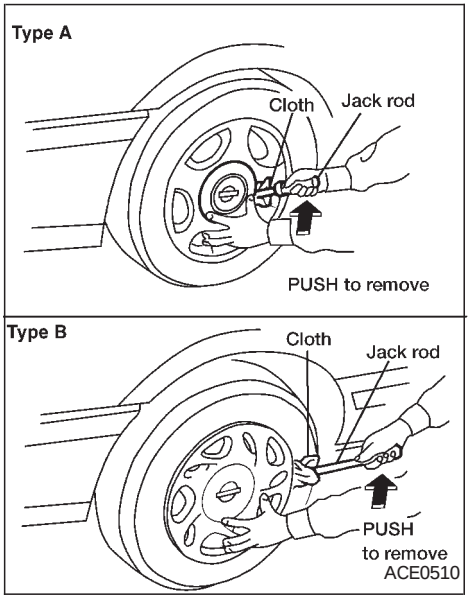

Removing wheel caps

⚠ CAUTION

Do not use your hands to pry off wheel caps. Doing so could result in personal injury.

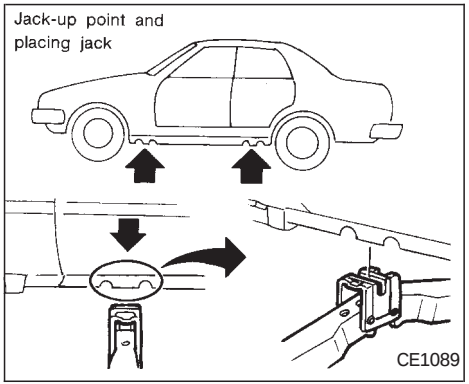

Jacking up and removing tire

Carefully read the caution label attached to the jack body and the following instructions:

1. Place the jack directly under the jack-up point as illustrated above so the top of the jack contacts the vehicle at the jack-up point. Align the jack head between the two notches in the front or the rear as shown. Also fit the groove of the jack head between the notches as shown.

   The jack should be used on firm and level ground.

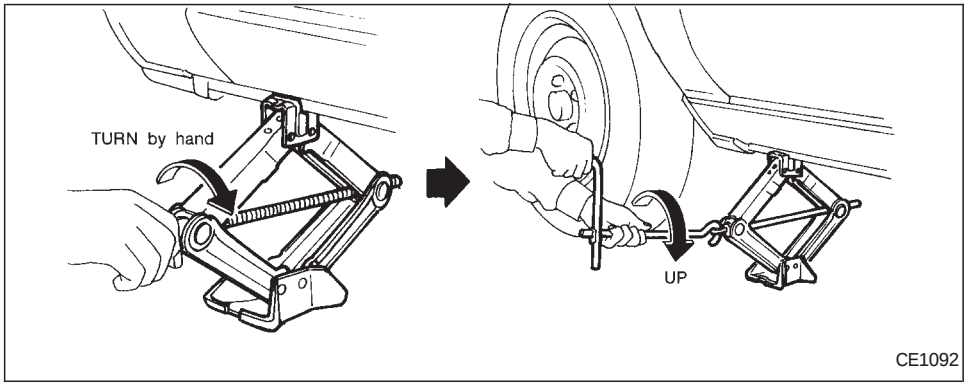

2. Loosen each wheel nut one or two turns by turning counterclockwise with the wheel nut wrench. **Do not remove the wheel nuts until the tire is off the ground.**
3. Carefully raise the vehicle until the tire clears the ground. To lift the vehicle, securely hold the jack lever and rod with both hands as shown above. Remove the wheel nuts, and then remove the tire.

⚠ WARNING

- **Never get under the vehicle while it is supported only by the jack.**
- **Use the jack provided with your vehicle. Do not use the jack provided with your vehicle on other vehicles. The jack is designed only for lifting your vehicle during a tire change.**
- **Use the correct jack-up points; never use any other part of the vehicle for jack support.**
- **Never jack up the vehicle more than necessary.**
- **Never use blocks on or under the jack.**
- **Do not start or run engine while vehicle is on the jack as it may cause the vehicle to move.**
- **Do not allow passengers to stay in the vehicle while it is on the jack.**
- **Never run the engine with the wheels off the ground. It may cause the vehicle to move. This is especially true for vehicles with limited slip differential carriers.**

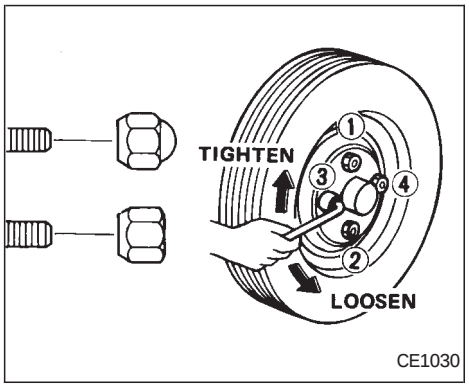

Installing wheel

The T-type spare tire is designed for emergency use. See specific instructions under the heading ‘‘Wheels and tires’’ in the ‘‘Do-it- yourself operations’’ section.

1. Clean any mud or dirt from the surface between the wheel and hub.
2. Carefully put the wheel on and install the wheel nuts finger-tight.
3. With the wheel nut wrench, tighten wheel nuts alternately and evenly until they are tight.

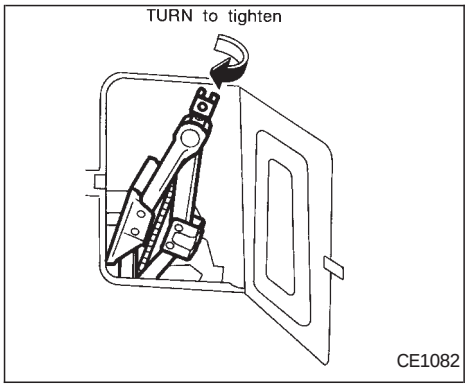

4. Lower the vehicle slowly until the tire touches the ground. Then, with the wheel nut wrench, tighten the wheel nuts securely in the sequence as illustrated.

⚠ WARNING

- **Incorrect wheel nuts or improperly tightened wheel nuts can cause the wheel to become loose or come off. This could cause an accident.**
- **Do not use oil or grease on the wheel studs or nuts. This could cause the nuts to become loose.**

As soon as possible tighten the wheel nuts to the specified torque with a torque wrench.

Wheel nut tightening torque:

72 to 87 ft-lb
(98 to 118 N·m)

Adjust tire pressure to the COLD pressure.

COLD pressure: After vehicle has been parked for three hours or more or driven less than 1 mile (1.6 km).

COLD tire pressures are shown on the tire placard affixed to the center console lid.

- **Retighten the wheel nuts when the vehicle has been run for 600 miles (1,000 km).**

5. Securely store the spare tire and jacking equipment in the vehicle.

⚠ WARNING

- **Always make sure that the spare tire and jacking equipment are properly secured after use. Such items can become dangerous projectiles in an accident or sudden stop.**

- **The T-type spare tire is designed for emergency use. See specific instructions under the heading ‘‘Wheels and tires’’ in the ‘‘Do-it-yourself operations’’ section.**

To start your engine with a booster battery, the instructions and precautions below must be followed.

WARNING

- **If done incorrectly, jump starting can lead to a battery explosion, resulting in severe injury or death. It could also damage your vehicle.**
- **Explosive hydrogen gas is always present in the vicinity of the battery. Keep all sparks and flames away from the battery.**
- **Do not allow battery fluid to come into contact with eyes, skin, cloth or painted surfaces. Battery fluid is a corrosive sulphuric acid solution which can cause severe burns. If the fluid should come into contact with anything, immediately flush the contacted area with water.**
- **Keep battery out of the reach of children.**
- **The booster battery must be rated at 12 volts. Use of an improper rated battery can damage your vehicle.**
- **Whenever working on or near a battery, always wear suitable eye protectors (for example, goggles or industrial safety spectacles) and remove rings, metal bands, or any other jewelry. Do not lean over the battery when jump starting.**
- **Do not attempt to jump start a frozen battery. It could explode and cause serious injury.**
- **Your vehicle has an automatic engine cooling fan. It could come on at any time. Keep hands and other objects away from it.**

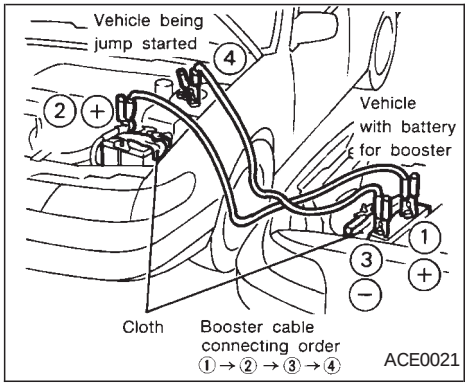

Always follow the instructions below. Failure to do so could result in damage to the charging system and cause personal injury.

1. If the booster battery is in another vehicle, position the two vehicles to bring their batteries into close proximity to each other.

   Do not allow the two vehicles to touch.

2. Apply the parking brake. Move the shift lever to Neutral (on automatic transmission models, move the lever to P). Switch off all unnecessary electrical systems (lights, heater, air conditioner, etc.).
3. Remove vent caps on the battery (if so equipped). Cover the battery with an old cloth to reduce explosion hazard.
4. Connect jumper cables in the sequence as illustrated.

⚠ CAUTION

- **Always connect positive (+) to positive (+) and negative (−) to body ground (for example, strut mounting bolt, etc. — not to the battery).**
- **Make sure that cables do not touch moving parts in the engine compartment and that clamps do not contact any other metal.**

5. Start the engine of the booster vehicle and let it run for a few minutes.
6. Keep the engine speed of the booster vehicle at about 2,000 rpm, and start your engine in the normal manner.

⚠ CAUTION

Do not keep starter motor engaged for more than 10 seconds. If the engine does not start right away, turn the key off and wait 3 to 4 seconds before trying again.

7. After starting your engine, carefully disconnect the negative cable and then the positive cable.
8. Replace the vent caps (if so equipped). Be sure to dispose of the cloth used to cover the vent holes as it may be contaminated with corrosive acid.

PUSH STARTING

⚠ CAUTION

- **Automatic transmission models cannot be push started. This may cause transmission damage.**
- **Three way catalyst equipped models should not be started by pushing since the three way catalyst may be damaged.**
- **Never try to start the vehicle by towing it; when the engine starts, the forward surge could cause the vehicle to collide with the tow vehicle.**

IF YOUR VEHICLE OVERHEATS

If your vehicle is overheating (indicated by an extremely high temperature gauge reading), or if you feel a lack of engine power, detect abnormal noise, etc., take the following steps:

⚠ WARNING

- **Do not continue to drive if your vehicle overheats. Doing so could cause a vehicle fire.**
- **To avoid the danger of being scalded, never remove the radiator cap while the engine is still hot. When the radiator cap is removed, pressurized hot water will spurt out, possibly causing serious injury.**
- **Do not open the hood if steam is coming out.**

1. Move the vehicle safely off the road, apply the parking brake and move the shift lever to Neutral (automatic transmission to P).

   Do not stop the engine.

2. Turn off the air conditioner. Open all the windows, move the heater or air conditioner temperature control to maximum hot and fan control to high speed.
3. If engine overheating is caused by climbing a long hill on a hot day, run the engine at a fast idle (approximately 1,500 rpm) until the temperature gauge indication returns to normal.
4. Get out of the vehicle. Look and listen for steam or coolant escaping from the radiator before opening the hood. Wait until no steam or coolant can be seen before proceeding.
5. Open the engine hood.

⚠ WARNING

If steam or water is coming from the engine, stand clear to prevent getting burned.

6. Visually check drive belts for damage or looseness. Also check if the cooling fan is running. The radiator hoses and radiator should not leak water. If coolant is leaking, the water pump belt is missing or loose, or the cooling fan does not run, stop the engine.

⚠ WARNING

Be careful not to allow your hands, hair, jewelry or clothing to come into contact with, or to get caught in, the running fan, belts, or fan motor.

The fan motor can start at any time when the coolant temperature is high.

7. After the engine cools down, check the coolant level in the reservoir tank with the engine running. Add coolant to the reservoir tank if necessary. Have your vehicle repaired at the nearest NISSAN dealer.

When towing your vehicle, all State (Provincial in Canada) and local regulations for towing must be followed. Incorrect towing equipment could damage your vehicle. Towing instructions are available from your NISSAN dealer. Local service operators will generally be familiar with the applicable laws and procedures for towing. To assure proper towing and to prevent accidental damage to your vehicle, NISSAN recommends that you have a service operator tow your vehicle. It is advisable to have the service operator carefully read the following precautions:

⚠ WARNING

- **Never ride in a vehicle that is being towed.**
- **Never get under your vehicle after it has been lifted by a tow truck.**

⚠ CAUTION

- **When towing, make sure that the transmission, axles, steering system and powertrain are in working condition. If any unit is damaged, dollies must be used.**
- **When towing with the front wheels on the ground:**

  Turn the ignition key to the OFF position and secure the steering wheel in a straight-ahead position with a rope or similar device. Never place the ignition key in the LOCK position. This will result in damage to the steering lock mechanism.

  Move the gearshift lever to the Neutral (N position).

  On automatic transmission models, to move the shift lever to the Neutral position, turn the ignition key to the ACC position. After moving the shift lever to the Neutral position, be sure to turn the ignition key to the OFF position.
- **When towing with the rear wheels on the ground, release the parking brake.**

  On automatic transmission models, to move the shift lever to the Neutral position, turn the ignition key to the ACC position. After moving the shift lever to the Neutral position, be sure to turn the ignition key to the OFF position.
- **Attach safety chains for all towing.**

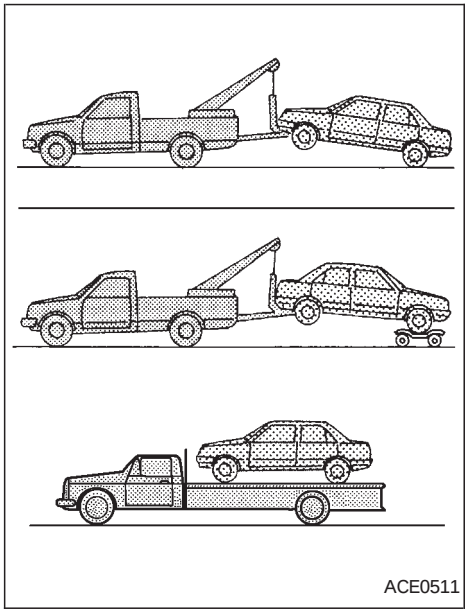

NISSAN recommends that your vehicle be towed with the driving (front) wheels off the ground as illustrated.

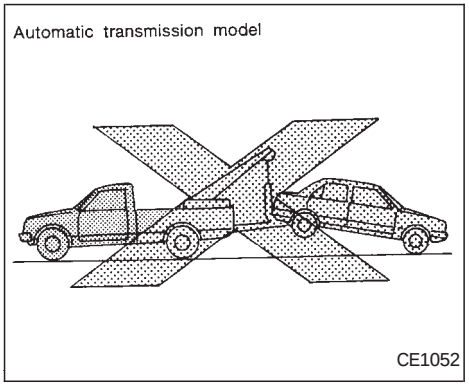

⚠ CAUTION

- **Never tow an automatic transmission model with the rear wheels raised (with the front wheels on the ground) as this may cause serious and expensive damage to the transmission. If it is necessary to tow the vehicle with the rear wheels raised, always use towing dollies under the front wheels.**

- **If you have to tow an automatic transmission model with four wheels on ground, observe the following restricted towing speeds and distances:**
  - **Speed: Below 30 MPH (50 km/h)**
  - **Distance: Less than 40 miles (65 km)**
- **Never tow an automatic transmission model from the rear (for example, backward) with four wheels on the ground as this may cause serious and expensive damage to the transmission.**

VEHICLE RECOVERY (Freeing a stuck vehicle)

- Tow chains or cables must be attached only to the main structual members of the vehicle.
- Pulling devices should be routed so they do not touch any part of the suspension, steering, brake or cooling systems.
- Always pull the cable straight out from the front or rear of the vehicle. Never pull on the vehicle at an angle.
- Pulling devices such as ropes or canvas straps are not recommended for use in vehicle towing or recovery.
- Stand clear of a stuck vehicle.

WARNING

Do not spin your tires at high speed. This could cause them to explode and result in serious injury. Parts of your vehicle could also overheat and be damaged.

6 Appearance and interior care

Cleaning exterior and interior.....6-2
Corrosion protection.....6-5

CLEANING EXTERIOR AND INTERIOR

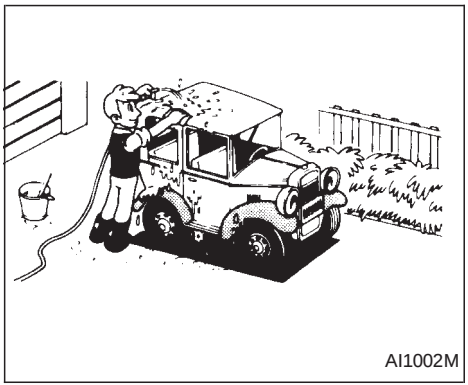

In order to maintain the appearance of your vehicle, it is important to take proper care of it.

In the following cases, please wash your vehicle as soon as possible to protect the paint surface:

- After a rainfall to prevent possible damage from acid rain
- After driving on coastal roads
- When contaminants such as soot, bird droppings, tree sap, metal particles or bugs get on the paint surface
- When dust or mud builds up on the surface

Whenever possible, store or park your vehicle inside a garage or in a covered area.

When it is necessary to park outside, park in a shady area or protect the vehicle with a body cover.

Be careful not to scratch the paint surface when putting on or removing the body cover.

Washing

Wash dirt off with a wet sponge and plenty of water. Clean the vehicle thoroughly using a mild soap, a special vehicle soap or general purpose dish-washing liquid mixed with clean, lukewarm (never hot) water.

⚠ CAUTION

- **Do not use strong household soap, strong chemical detergents, gasoline or solvents.**
- **Do not wash the vehicle in direct sunlight or while the vehicle body is hot, as the surface may become water-spotted.**
- **Avoid using tight-napped or rough cloths, such as washing mitts. Care must be taken when removing caked-on dirt or other foreign substances so that the paint surface is not scratched or damaged.**

Rinse the vehicle thoroughly with plenty of clean water.

Inside flanges, seams and folds on the doors, hatches and hood are particularly vulnerable to the effects of road salt. Therefore, these areas must be regularly cleaned. Take care that the drain holes in the lower edge of the door are open. Spray water under the body and in the wheel wells to loosen the dirt and wash away road salt.

A damp chamois can be used to dry the vehicle to avoid water spots.

Waxing

Regular waxing protects the paint surface and helps retain new vehicle appearance. After waxing, polishing is recommended to remove built-up residue and to avoid a ‘‘weathered’’ appearance.

Your NISSAN dealer can assist you in

choosing the proper product.

- Wax your vehicle only after a thorough washing. Follow the instructions supplied with the wax.
- Do not use a wax containing any abrasives, cutting compounds or cleaners that may damage the vehicle finish.
- If the surface does not polish easily, use a “road tar” remover and wax again.

Machine compounding or aggressive polishing on a base coat/clear coat paint finish may dull the finish or leave swirl marks.

Only use black wax or black shoe polish on black urethane or polypropylene bumpers.

Removing spots

Remove tar and oil spots, industrial dust, insects, and tree sap as quickly as possible from the surface of the paint to avoid lasting damage or staining. Special cleaning products are available at your NISSAN dealer or any automotive accessory store.

Underbody

In areas where road salt is used in winter, the underbody must be cleaned regularly. This will prevent dirt and salt from building up and causing underbody and suspension corrosion. Before winter and again in the spring, the underseal must be checked and, if necessary, retreated.

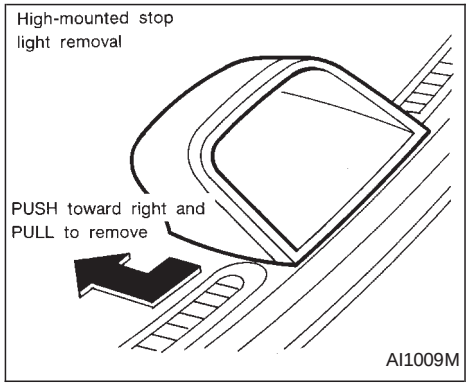

Cleaning glass

When cleaning the rear window, it may be easier to clean if the high-mounted stop light is removed first.

Be careful when removing the high-mounted stop light to reduce the risk of damaging the high-mounted stop light wires.

The high-mounted stop light must be properly reinstalled before driving your vehicle.

Use glass cleaner to remove smoke and dust film from the glass surfaces. It is normal for glass to become coated with a film

after the vehicle is parked in the hot sun. Glass cleaner and a soft cloth easily removes this film.

⚠ CAUTION

When cleaning the inside of the window, do not use sharp-edged tools, abrasive cleaners or chlorine based disinfectant cleaners. They could damage the rear window defogger.

Cleaning aluminum alloy wheels

Wash regularly, especially during winter months in areas where road salt is used. If not removed, salt could discolor the wheels.

Chrome parts

Clean all chrome parts regularly with a non-abrasive chrome polish to maintain the finish.

Cleaning interior

Occasionally remove loose dust from the interior trim, plastic parts and seats using a vacuum cleaner or soft brush. Wipe the vinyl and leather surfaces with a clean, soft cloth dampened in mild soap solution, then wipe clean with a dry, soft cloth. Before using any fabric protector, read the manufacturer's recommendations. Some fabric protectors contain chemicals that may stain or bleach the seat material.

⚠ CAUTION

- **Never use benzine, thinner, or any similar material.**
- **The leather seats should be regularly coated with a leather wax like saddle soap. Never use car wax.**
- **Never use fabric protectors unless recommended by the manufacturer.**

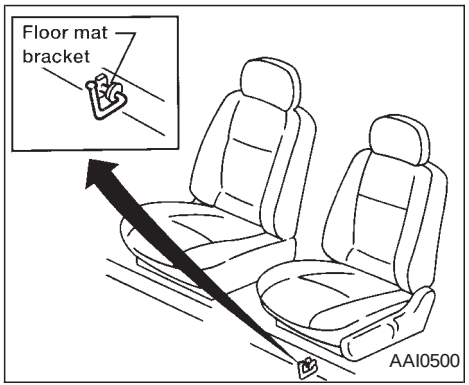

Floor mat positioning aid (Driver side only)

This vehicle includes a front floor mat bracket to act as a floor mat positioning aid. NISSAN floor mats have been specially designed for your vehicle model. The driver side floor mat has a grommet hole incorporated in it. Simply position the mat by placing the floor mat bracket hook through the floor mat grommet hole while centering the mat in the floorpan contour.

Periodically check to make certain the mats are properly positioned.

Floor mats

The use of Genuine NISSAN floor mats can extend the life of your vehicle carpet and make it easier to clean the interior. **No matter what mats are used, be sure they are fitted for your vehicle and are properly positioned in the footwell to prevent interference with pedal operation.** Mats should be maintained with regular cleaning and replaced if they become excessively worn.

Seat belts

The seat belts can be cleaned by wiping them with a sponge dampened in a mild soap solution. Allow the belts to dry completely before using them.

⚠ WARNING

Do not allow wet belts to roll up in the retractor. NEVER use bleach, dye, or chemical solvents since these may severely weaken the seat belt webbing.

Most common factors contributing to vehicle corrosion:

1. The accumulation of moisture-retaining dirt and debris in body panel sections, cavities, and other areas.
2. Damage to paint and other protective coatings caused by gravel and stone chips or minor traffic accidents.

Environmental factors which influence the rate of corrosion:

Moisture

Accumulation of sand, dirt and water on the vehicle body underside can accelerate corrosion. Wet floor coverings will not dry completely inside the vehicle, and should be removed for drying to avoid floor panel corrosion.

Relative humidity

Corrosion will be accelerated:

- in areas of high relative humidity.
- especially in those areas where the temperatures stay above freezing.
- where atmospheric pollution exists.

- where road salt is used.

Temperature

A temperature increase accelerates the rate of corrosion to those parts which are not well ventilated.

Air pollution

Industrial pollution, the presence of salt in the air in coastal areas, or heavy road salt use accelerates the corrosion process. Road salt also accelerates the disintegration of paint surfaces.

To protect your vehicle from corrosion:

- Wash and wax your vehicle often to keep the vehicle clean.
- Always check for minor damage to the paint and repair it as soon as possible.
- Keep drain holes at the bottom of the doors open to avoid water accumulation.
- Check the underbody for accumulation of sand, dirt or salt. If present, wash with water as soon as possible.

⚠ CAUTION

- **NEVER remove dirt, sand or other debris from the passenger compartment by washing it out with a hose. Remove dirt with a vacuum cleaner or broom.**
- **Never allow water or other liquids to come in contact with electronic components inside the vehicle as this may damage them.**

7 Do-it-yourself operations

Maintenance precautions 7-2
Engine compartment check locations 7-3
Engine cooling system 7-4
Checking engine coolant level 7-4
Changing engine coolant 7-5
Engine oil 7-7
Checking engine oil level 7-7
Changing engine oil 7-8
Changing engine oil filter 7-9
Automatic transmission fluid (ATF) 7-9
Temperature conditions for checking ATF.....7-10
Power steering fluid.....7-11
Brake and clutch fluid.....7-11
Window washer fluid 7-12
Battery 7-13
Jump starting.....7-14
Drive belts 7-14
Spark plug replacement 7-15
Air cleaner housing filter 7-16
Wiper blades 7-17
Parking brake check.....7-18
Brake pedal 7-18
Brake booster 7-19
Clutch pedal 7-20
Fuses.....7-20
Fusible links.....7-21
Light bulbs 7-22
Headlights 7-22
Headlight aiming adjustment.....7-23
Adjustment after headlight assembly replacement.....7-24
Bulb replacement 7-25
Wheels and tires 7-29

MAINTENANCE PRECAUTIONS

When performing any inspection or maintenance work on your vehicle, always take care to prevent serious accidental injury to yourself or damage to the vehicle. The following are general precautions which should be closely observed.

⚠ WARNING

- **Park the vehicle on a level surface, apply the parking brake securely and block the wheels to prevent the vehicle from moving. For a manual transmission, move the shift lever to Neutral. For an automatic transmission, move the shift lever to P (Park).**
- **Be sure the ignition key is OFF when performing any parts replacement or repairs.**
- **Your vehicle is equipped with an automatic engine cooling fan. It may come on at any time without warning, even if the ignition key is in the OFF position and the engine is not running. To avoid injury, always disconnect the negative battery cable before working near the fan.**
- **If you must work with the engine running, keep your hands, clothing, hair and tools away from moving fans, belts and any other moving parts.**
- **It is advisable to remove ties and any jewelry, such as rings, watches, etc. before working on your vehicle.**
- **If you must run the engine in an enclosed space such as a garage, be sure there is proper ventilation for exhaust gases.**
- **Never get under the vehicle while it is supported only by a jack. If it is necessary to work under the vehicle, support it with safety stands.**
- **Keep smoking materials, flame and sparks away from fuel and the battery.**
- **On gasoline engine models with the Multiport Fuel Injection (MFI) system, the fuel filter or fuel lines should be serviced by a NISSAN dealer because the fuel lines are under high pressure even when the engine is off.**

⚠ CAUTION

- **Do not work under the hood while the engine is hot. Turn off the engine and wait until it cools down.**
- **Never connect or disconnect either the battery or any transistorized component connector while the ignition is ON.**
- **Never leave the engine or the automatic transmission related component harness connector disconnected while the ignition is on.**
- **Avoid contact with used engine oil. Improperly disposed motor oil and/or other vehicle fluids can hurt the environment. Always conform to local regulations for disposal of vehicle fluid.**

This ‘‘Do-it-yourself operations’’ section gives instructions regarding only those items which are relatively easy for an owner to perform.

You should be aware that incomplete or improper servicing may result in operating difficulties or excessive emissions, and could affect your warranty coverage. **If in doubt about any servicing, have it done by your NISSAN dealer.**

ENGINE COMPARTMENT CHECK LOCATIONS

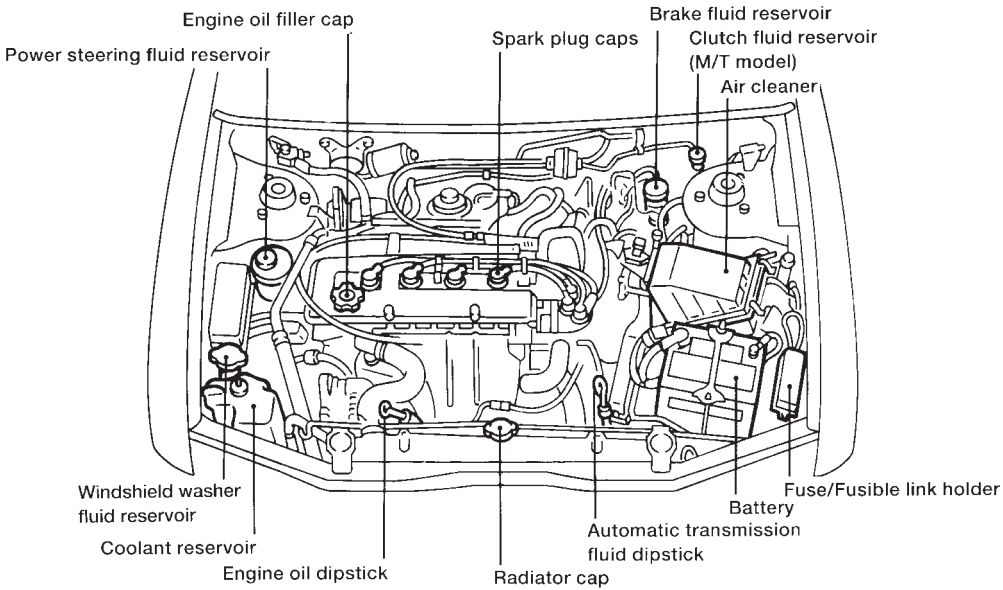

ADI0501

The engine cooling system is filled at the factory with a high-quality, year-round, anti-freeze coolant solution. The anti-freeze solution contains rust and corrosion inhibitors, therefore additional cooling system additives are not necessary.

⚠ CAUTION

When adding or replacing coolant, be sure to use only an ethylene glycol anti-freeze with the proper mixture ratio of 50% anti-freeze and 50% distilled water. The use of other types of coolant solutions may damage your cooling system.

Outside temperature down to		Anti-freeze	Distilled water
°C	°F		
−35	−30	50%	50%

⚠ WARNING

- **Never remove the radiator cap when the engine is hot. Wait until the engine and radiator cool down. Serious burns could be caused by high pressure fluid escaping from the radiator. See precautions in ‘‘If your vehicle overheats,’’ found in the ‘‘In case of emergency’’ section.**
- **The radiator is equipped with a pressure cap. Use a genuine NISSAN cap or its equivalent when replacement is required.**

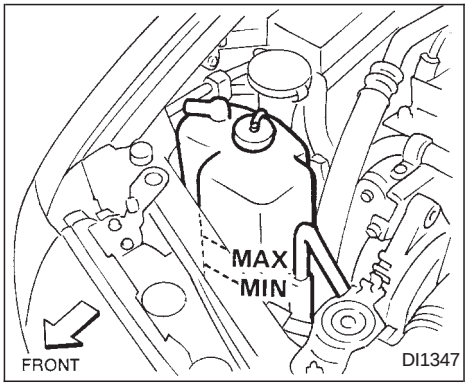

CHECKING ENGINE COOLANT LEVEL

With coolant reservoir

Check the coolant level in the reservoir when the engine is cold. If the coolant level is below MIN, add coolant up to the MAX level. If the reservoir is empty, check the coolant level in the radiator **when the engine is cold.** If there is insufficient coolant in the radiator, fill the radiator with coolant up to the filler opening and also add it to the reservoir up to the MAX level.

If the cooling system frequently requires coolant, have it checked by your NISSAN dealer.

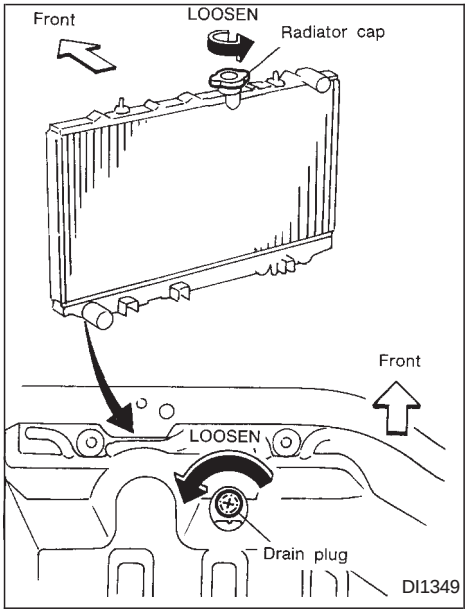

CHANGING ENGINE COOLANT

- Major cooling system repairs should be performed by your NISSAN dealer. The service procedures can be found in the appropriate NISSAN Service Manual.
- Improper servicing can result in reduced heater performance and engine overheating.

⚠ WARNING

- **To avoid the danger of being scalded, never change the coolant when the engine is hot.**
- **Never remove the radiator cap when the engine is hot. Serious burns could be caused by high pressure fluid escaping from the radiator.**

1. Perform the following procedure to open the heater water cock:

- Automatic air conditioner

a. Turn ignition switch from OFF to ON.

b. Within 5 seconds after ignition switch is turned ON, press the automatic heater and air conditioner OFF switch for at least 5 seconds. At this time, AUTO, ECON, 88°F and appear in the display.

c. Press ▲ (HOT) switch 3 times.

d. Press (defrost) switch 2 times.

e. Make sure that the display indicates 43.

f. Wait 10 seconds before turning ignition switch OFF.

- Manual air conditioning

a. Turn the ignition switch ON and set the temperature control lever to the maximum hot position. Wait 10 seconds, then turn the switch OFF.

2. Open the radiator drain plug. Open the drain plug on the engine water pipe.
3. Open the radiator cap to drain the coolant.
4. Flush the cooling system by running fresh water through the radiator.
5. Close the radiator drain plug and the drain plug on the engine water pipe securely.
6. See the ‘‘Technical and consumer information’’ section for cooling system capacity. Fill the radiator slowly with the proper mixture of coolant and water. Fill the reservoir tank up to the MAX level.
7. Open and close the air release plug to release air. Then fill the radiator again and install the radiator cap.

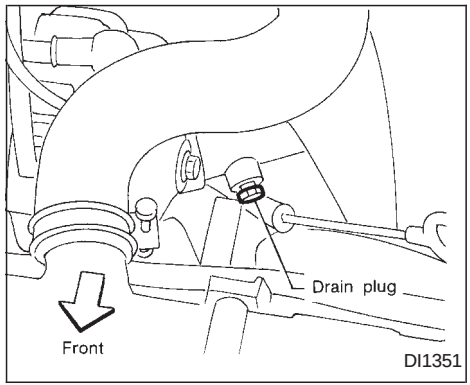

8. Start the engine and warm it up until it reaches normal operating temperature. Then race the engine 2 or 3 times under no load. Watch the coolant temperature gauge for signs of overheating.
9. Stop the engine. After it completely cools down, refill the radiator up to the filler opening. Fill the reservoir tank up to the MAX level.
10. Open and close the air release plug to release air. Then fill the radiator again and install the radiator cap.

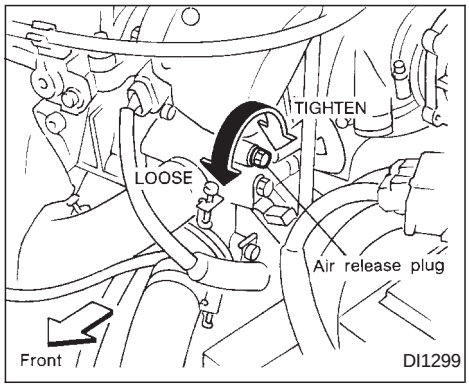

11. Check the radiator drain plug and the drain plug on the engine water pipe for any sign of leakage, tighten if necessary.

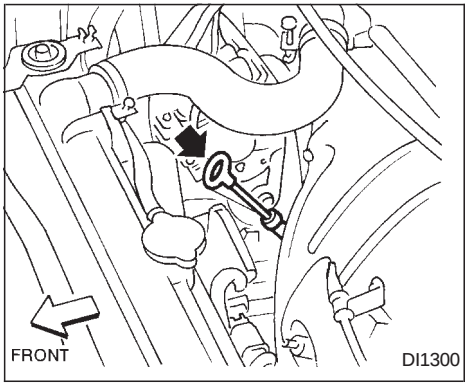

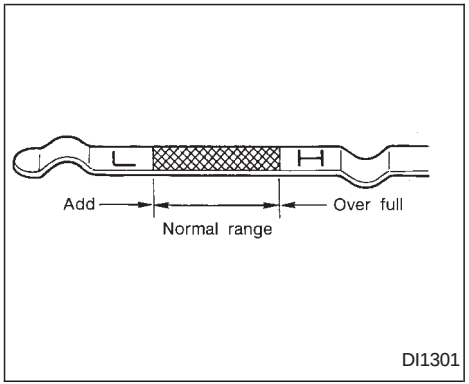

CHECKING ENGINE OIL LEVEL

1. Park the vehicle on a level surface and apply the parking brake.
2. Run the engine until it reaches operating temperature.
3. Turn off the engine. **Wait a few minutes for the oil to drain back into the oil pan.**
4. Remove the dipstick and wipe it clean. Reinsert it all the way.
5. Remove the dipstick again and check the oil level. It should be between the H and L marks. If the oil level is below the L mark, remove the oil filler cap and pour recommended oil through the opening. **Do not overfill.**
6. Recheck the oil level with the dipstick.

It is normal to add some oil between oil maintenance intervals or during the break-in period, depending on the severity of operating conditions.

⚠ CAUTION

- **Oil level should be checked regularly. Operating with insufficient amount of oil can damage the engine, and such damage is not covered by warranty.**

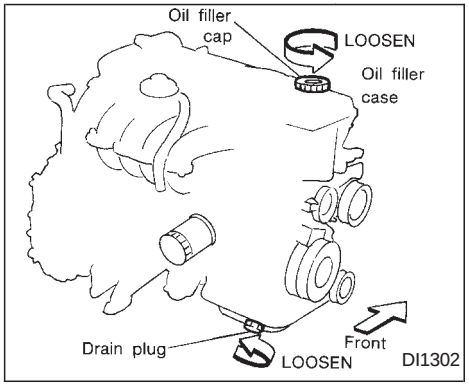

CHANGING ENGINE OIL

1. Park the vehicle on a level surface and apply the parking brake.
2. Run the engine until it reaches operating temperature, then turn it off.
3. Place a large drain pan under the drain plug.
4. Remove the oil filler cap.
5. Remove the drain plug with a wrench and completely drain the oil.

   If the oil filter is to be changed, remove and replace it at this time. See ‘‘Changing oil filter’’ later in this section.

⚠ CAUTION

Be careful not to burn yourself, as the engine oil is hot.

Waste oil must be disposed of properly. Check your local regulations.

6. Clean and re-install the drain plug and washer. Securely tighten the drain plug with a wrench.

   Drain plug tightening torque:

   22 to 29 ft-lb
   (29 to 39 N·m)

   Do not overtighten.

7. Refill the engine with a recommended oil and install the cap securely.

   See the ‘‘Technical and consumer information’’ section for refill capacity.

8. Start the engine.

   Check for leakage around the drain plug. Correct as required.

9. Turn the engine off and wait several minutes. Check the oil level with the dipstick. Add engine oil if necessary.

⚠ WARNING

- **Prolonged and repeated contact with used engine oil may cause skin cancer.**
- **Try to avoid direct skin contact with used oil. If skin contact is made, wash thoroughly with soap or hand cleaner as soon as possible.**
- **Keep used engine oil out of reach of children.**

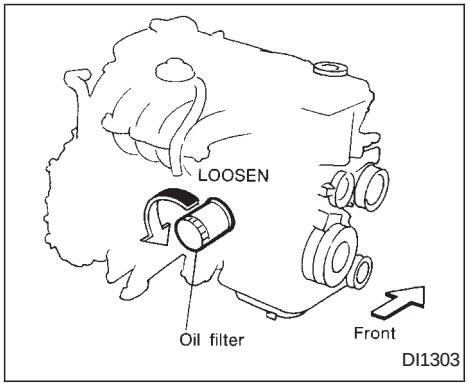

CHANGING ENGINE OIL FILTER

1. Park the vehicle on a level surface and apply the parking brake.
2. Turn the engine off.
3. Loosen the oil filter with an oil filter wrench. Remove the oil filter by turning it by hand.

⚠ CAUTION

Be careful not to burn yourself, as the engine oil may be hot.

4. Wipe the engine oil filter mounting surface with a clean rag.

   Be sure to remove any old rubber gasket remaining on the mounting surface of the engine.
5. Coat the rubber gasket on the new filter with clean engine oil.
6. Screw in the oil filter until a slight resistance is felt, and then tighten an additional 2/3 turn.
7. Start the engine and check for leakage around the oil filter. Correct as required.
8. Turn the engine off and wait several minutes. Check the oil level. Add engine oil if necessary.

AUTOMATIC TRANSMISSION FLUID (ATF)

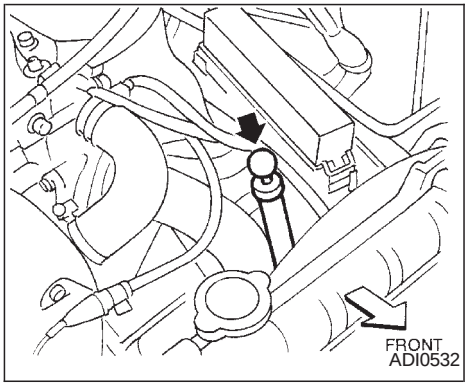

⚠ WARNING

- **When engine is running, keep hands, jewelry and clothing away from any moving parts such as cooling fan and drive belt.**
- **Automatic transmission fluid is poisonous and should be stored carefully in marked containers out of the reach of children.**

TEMPERATURE CONDITIONS FOR CHECKING ATF

- The fluid level should be checked using the HOT range on the dipstick after the following conditions have been met:

— The engine should be warmed up to operating temperature.

— The vehicle should be driven at least 5 minutes.

— The automatic transmission fluid should be warmed to between 122° and 176°F (50° to 80°C).

- The fluid can be checked at fluid temperatures of 86° to 122°F (30 to 50°C) using the COLD range on the dipstick after the engine is warmed up and before driving. However, the fluid should be re-checked using the HOT range.

1. Park the vehicle on a level surface and set the parking brake.
2. Start the engine and then move the shift lever through each gear range. Move the shift lever to P after you have moved it through all ranges.

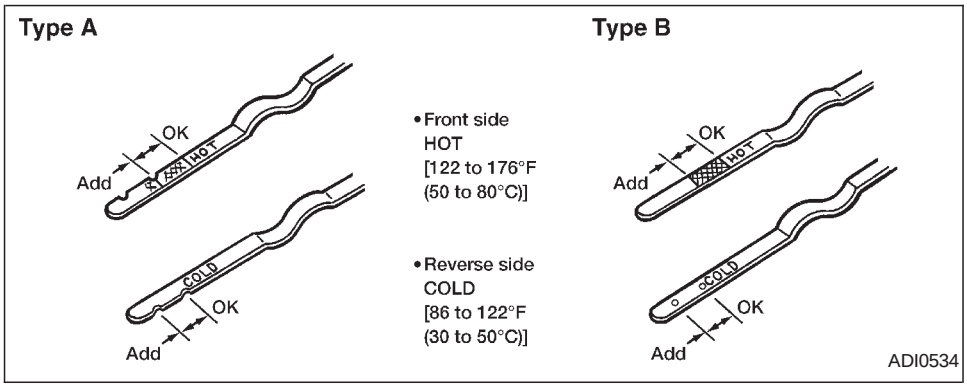

3. Check the fluid level with the engine idling.
4. Remove the dipstick and wipe it clean with lint-free paper.
5. Reinsert the dipstick into the charging pipe as far as it will go.
6. Remove the dipstick and note the reading. If the level is at the low side of either range, add fluid to the charging pipe.

⚠ CAUTION

DO NOT OVERFILL.
USE ONLY NISSAN Matic 'D' (Continental U.S. and Alaska) or Genuine NISSAN Automatic Transmission Fluid (Canada). Dexron® III/Mercon® or equivalent may also be used. Outside the continental United States and Alaska contact a NISSAN dealership for more information regarding suitable fluids, including recommended brand(s) of Dexron® III/Mercon® or Dexron® IIE/Mercon® Automatic Transmission Fluid.

NOTE:

If the vehicle has been driven for a long time at high speeds, or in city traffic in hot weather, or if it is being used to pull a trailer, the accurate fluid level cannot be read. You should wait until the fluid has cooled down (about 30 minutes).

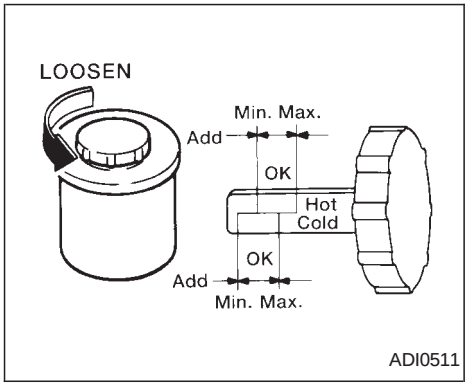

Check the fluid level in the reservoir.

The fluid level should be checked using the HOT range on the dipstick at fluid temperatures of 122° to 176°F (50° to 80°C) or using the COLD range on the dipstick at fluid temperatures of 32° to 86°F (0° to 30°C).

⚠ CAUTION

- **Do not overfill.**
- **Recommended fluid is type DEXRON™ IIE, DEXRON™ III or equivalent.**

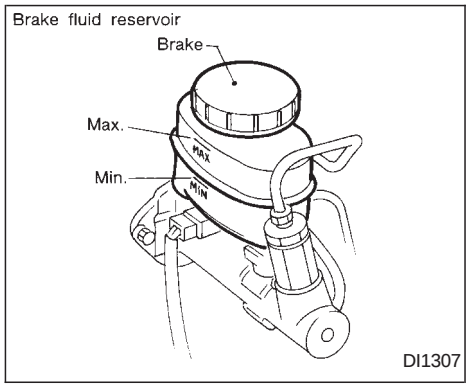

Check the brake fluid level in the reservoir. If the fluid level is below the MIN line or the brake warning light comes on, add **DOT 3** fluid up to the MAX line. If fluid must be added frequently, the system should be thoroughly checked by your NISSAN dealer.

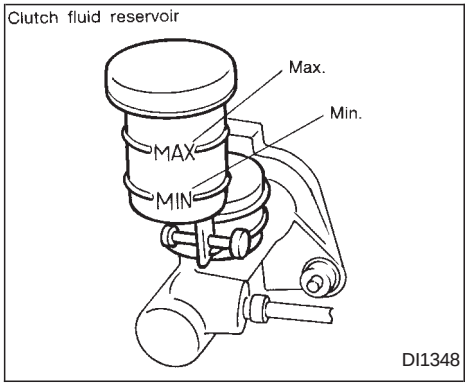

Check the clutch fluid level in the reservoir (manual transmission only). If the fluid level is below the MIN line, add **DOT 3** fluid up the MAX line. If fluid must be added frequently, the system should be thoroughly checked by your NISSAN dealer.

For further brake and clutch fluid specification information, refer to ‘‘capacities and recommended fuel/lubricants’’ in the ‘‘Technical and consumer information’’ section of this manual.

⚠ WARNING

Use only new fluid. Old, inferior, or contaminated fluid may damage the brake and clutch systems. The use of improper fluids can damage the brake system and affect the vehicle’s stopping ability.

⚠ CAUTION

Do not spill the fluid on painted surfaces. This will damage the paint. If fluid is spilled, wash with water.

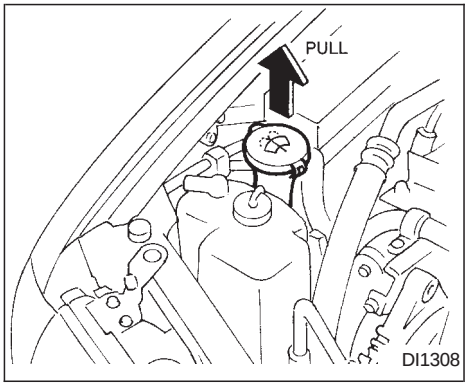

Canada Only

Add fluid when the low washer fluid warning light comes on. Add a washer solvent to the water for better cleaning. In the winter season, add a windshield washer anti-freeze. Follow the manufacturer’s instructions for the mixture ratio.

⚠ CAUTION

Do not substitute engine anti-freeze coolant for windshield washer solution. This may result in damage to the paint.

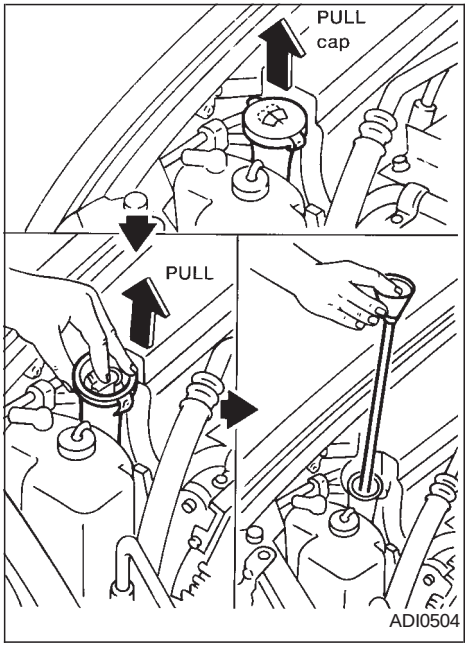

For USA

To check the fluid level, use your finger to plug the center hole of the cap assembly (as shown above), then remove it from the tank.

If there is no fluid in the tube, add fluid. Add a washer solvent to the water for better cleaning. In the winter season, add a windshield washer anti-freeze. Follow the manufacturer's instructions for the mixture ratio.

- Keep the battery surface clean and dry. Any corrosion should be washed off with a solution of baking soda and water.
- Make certain the terminal connections are clean and securely tightened.
- If the vehicle is not to be used for 30 days or longer, disconnect the negative (—) battery terminal cable to prevent discharge.

⚠ WARNING

- **Do not expose the battery to flames or electrical sparks. Hydrogen gas generated by battery action is explosive. Do not allow battery fluid to contact your skin, eyes, fabrics, or painted surfaces. After touching a battery or battery cap, do not touch or rub your eyes. Thoroughly wash your hands. If the acid contacts your eyes, skin or clothing, immediately flush with water for at least 15 minutes and seek medical attention.**
- **When working on or near a battery, always wear suitable eye protection and remove all jewelry.**
- **Keep the battery out of the reach of children.**

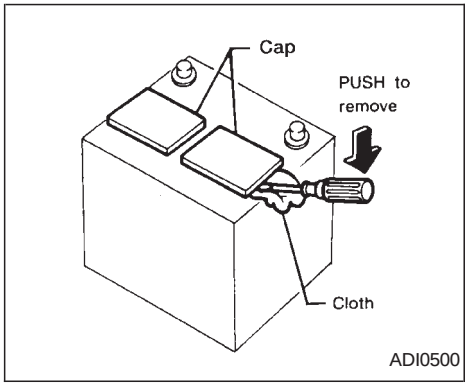

1. To remove the cap, gently pry between the battery cap and cover as illustrated.

   Use a cloth to protect the battery case.

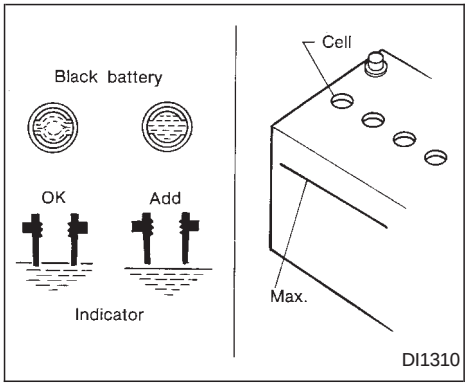

2. Check the fluid level in each cell.

   If it is necessary to add fluid, add only distilled water to bring the level up to the OK level indicator in each filler opening. **Do not overfill.**

JUMP STARTING

If jump starting is necessary, see the ‘‘In case of emergency’’ section. If the engine does not start by jump starting, the battery may have to be replaced. Contact your NISSAN dealer.

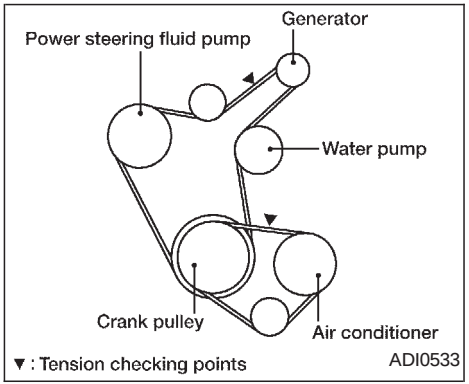

⚠ WARNING

Be sure the ignition key is OFF. The engine could rotate unexpectedly.

1. Visually inspect each belt for signs of unusual wear, cuts, fraying or looseness. If the belt is in poor condition or loose, have it replaced or adjusted by your NISSAN dealer.
2. Have the belts checked regularly for condition and tension in accordance with the maintenance schedule in this manual.

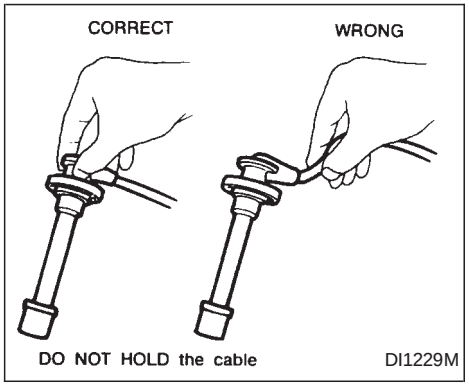

⚠ WARNING

Be sure the engine and ignition switch are off and that the parking brake is engaged securely.

⚠ CAUTION

Be sure to use the correct socket to remove the plugs. An incorrect socket can cause damage.

1. Remove brackets as necessary to give access to the high tension spark plug cables and spark plugs.
2. Disconnect the spark plug cables from the spark plugs.

   When disconnecting, always hold the boots, not the cables. Mark all cables to identify their original locations.

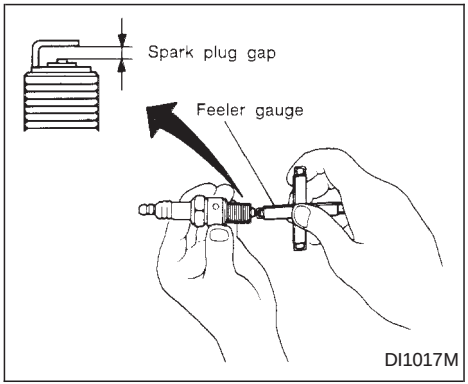

3. Remove the spark plugs with a spark plug socket.

   The plug socket has a rubber seal that holds the spark plug so it does not fall when it is pulled out. Make sure each spark plug is snugly fitted into the plug socket.
4. Check the gap on each new spark plug with a feeler gauge. **Use only the specified spark plugs.** The spark plug gap is shown in the ‘‘Technical and consumer information’’ section. Adjust it as required.

5. Fit the new plugs, one at a time, into the spark plug socket and install them. Turn each plug several full turns by hand, then tighten with a spark plug socket to the correct torque. Do not overtighten.

   Spark plug tightening torque:

   14 to 22 ft-lb
   (20 to 29 N·m)

6. Holding the boot, reconnect each high tension cable to its proper spark plug by pushing it on until you feel a snap.
7. Reinstall all brackets as necessary.

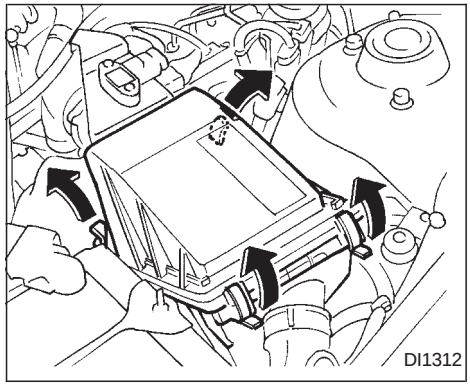

The air cleaner filter should not be cleaned and reused. Replace it according to the maintenance intervals shown in the ‘‘Maintenance schedule’’ section. When replacing the filter, wipe the inside of the air cleaner filter housing and the cover with a damp cloth.

⚠ WARNING

Operating the engine with the air cleaner off can cause you or others to be burned. The air cleaner not only cleans the air, it stops flame if the engine backfires. If it isn’t there, and the engine backfires, you could be burned. Don’t drive with it off, and be careful working on the engine with the air cleaner off.

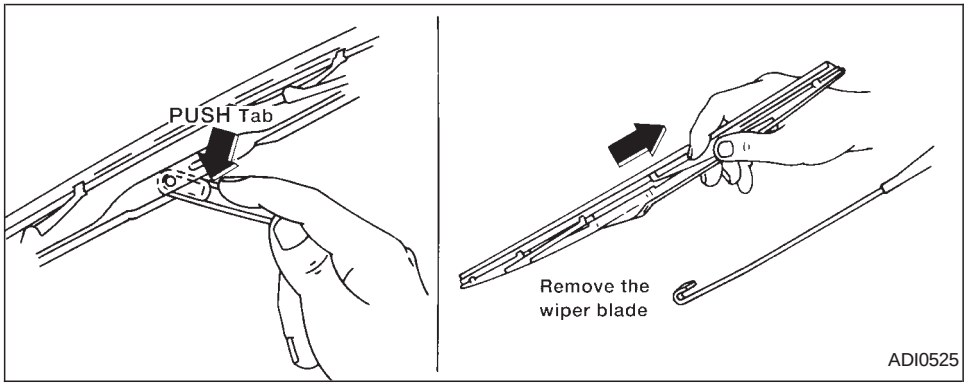

CLEANING

If your windshield is not clear after using the windshield washer or if a wiper blade chatters when running, wax or other material may be on the blade or windshield.

Clean the outside of the windshield with a washer solution or a mild detergent. Your windshield is clean if beads do not form when rinsing with clear water.

Clean each blade by wiping it with a cloth soaked in a washer solution or a mild detergent. Then rinse the blade with clear water. If your windshield is still not clear after cleaning the blades and using the wiper, replace the blades.

REPLACEMENT

1. Pull the wiper arm away from the windshield.
2. Push the tab, then move the wiper blade down.
3. Insert the new wiper blade onto the wiper arm until a clicking sound is heard.

⚠ CAUTION

- **After wiper blade replacement, return the wiper arm to its original position.**
- **Otherwise it may be damaged when the engine hood is opened.**
- **Make sure the wiper blade contacts the glass; otherwise the arm may be damaged from wind pressure.**

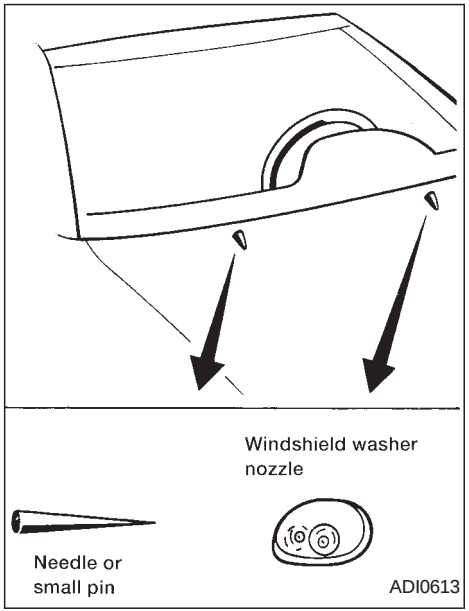

If you wax the surface of the hood, be careful not to let wax get into the washer nozzle. This may cause clogging or improper windshield washer operation. If wax gets into the nozzle, remove it with a needle or small pin.

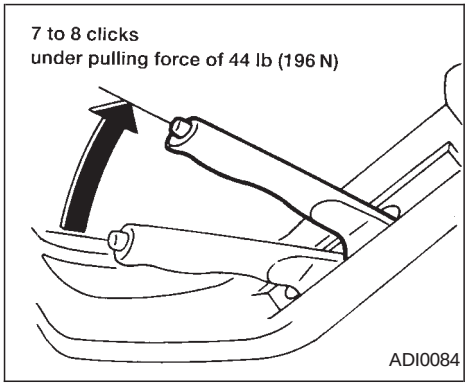

From the released position, pull the parking brake lever up slowly and firmly. If the number of clicks is out of the range listed above, see your NISSAN dealer.

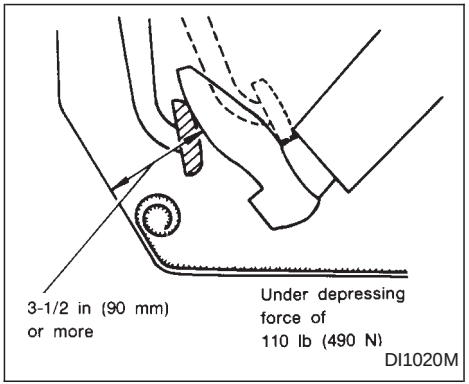

With the engine running, check the distance between the upper surface of the pedal and the metal floor. If it is out of the range shown above, see your NISSAN dealer.

Self-adjusting brakes

Your vehicle is equipped with self-adjusting brakes.

The front (and rear, if equipped) disc-type brakes self-adjust every time the brake pedal is applied. The rear drum- type brakes also self-adjust every time the brake pedal is applied.

If the brake pedal goes down farther than normal, it may be due to a lack of adjustment of the rear drum brakes. Apply the parking brake several times.

⚠ WARNING

See your NISSAN dealer and have it checked if the brake pedal height does not return to normal.

Brake pad wear indicators

The disc brake pads on your vehicle have audible wear indicators. When a brake pad requires replacement, it makes a high pitched scraping or screeching sound when the vehicle is in motion whether or not the brake pedal is depressed. Have the brakes checked as soon as possible if the wear indicator sound is heard.

Under some driving or climate conditions, occasional brake squeak, squeal or other noise may be heard. Occasional brake noise during light to moderate stops is normal and does not affect the function or performance of the brake system.

The rear drum brakes (if so equipped) do not have audible wear indicators. Should you ever hear an unusually loud noise from the rear drum brakes, have them inspected as soon as possible by your NISSAN dealer.

Proper brake inspection intervals should be followed. For more information regarding brake inspections, see the appropriate maintenance schedule information in the ‘‘Maintenance Schedule’’ section of this manual.

Check the brake booster function as follows:

1. With the engine off, press and release the brake pedal several times. When brake pedal movement (distance of travel) remains the same from one pedal application to the next, continue on to the next step.
2. While depressing the brake pedal, start the engine. The pedal height should drop a little.
3. With the brake pedal depressed, stop the engine. Keep the pedal depressed for about 30 seconds. The pedal height should not change.
4. Run the engine for one minute without depressing the brake pedal, then turn it off. Depress the brake pedal several times. The pedal travel distance will decrease gradually with each depression as the vacuum is released from the booster.

If the brakes do not operate properly, see your NISSAN dealer.

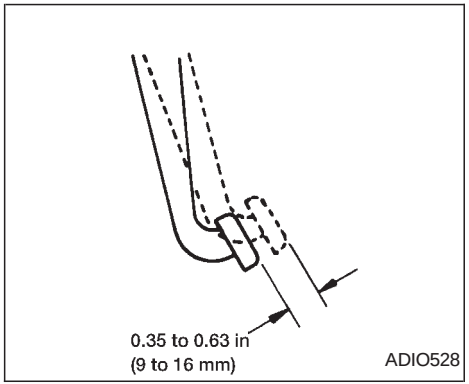

Press the pedal by hand and be sure the free travel is within the limits shown above. If free travel is out of the range shown above, see your NISSAN dealer.

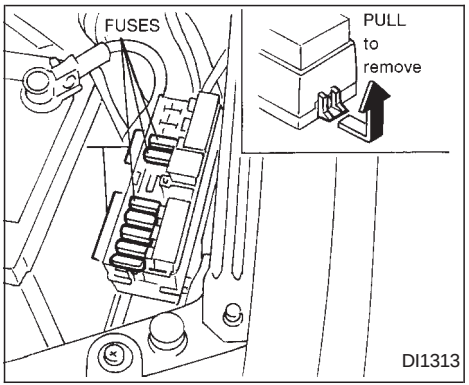

Engine compartment

⚠ CAUTION

Never use a fuse of higher amperage rating than that specified on the fuse box cover. This could damage the electrical system or cause a fire.

If the electrical equipment does not come on, check for an open fuse.

1. Be sure the ignition switch and the headlight switch are OFF.
2. Open the engine hood.
3. Remove the fuse box cover.
4. Remove the fuse with the fuse puller located on the reverse side of the passenger compartment fuse box cover.
5. If the fuse is open, replace it with a new fuse.
6. If a new fuse also opens, have the electrical system checked and repaired by your NISSAN dealer.

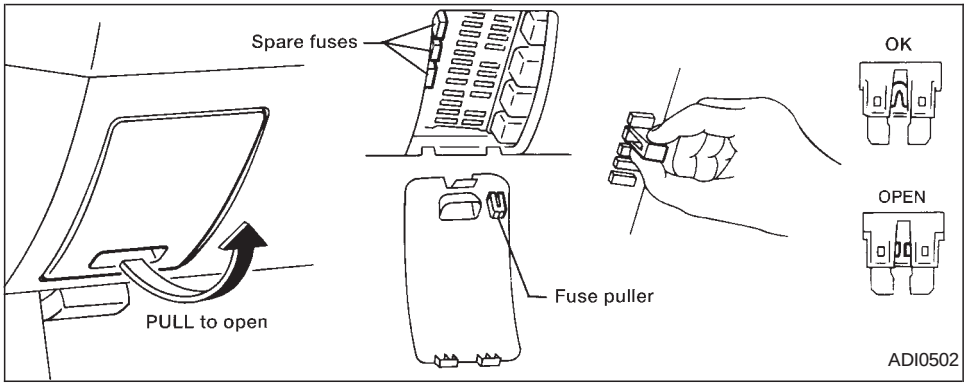

Passenger compartment

CAUTION

Never use a fuse of higher amperage rating than that specified on the fuse box cover. This could damage the electrical system or cause a fire.

If any electrical equipment does not operate, check for an open fuse.

1. Be sure the ignition switch and the headlight switch are OFF.
2. Open the fuse box cover.
3. Remove the fuse with the fuse puller.
4. If the fuse is open, replace it with a new fuse.
5. If a new fuse also opens, have the electrical system checked and repaired by your NISSAN dealer.

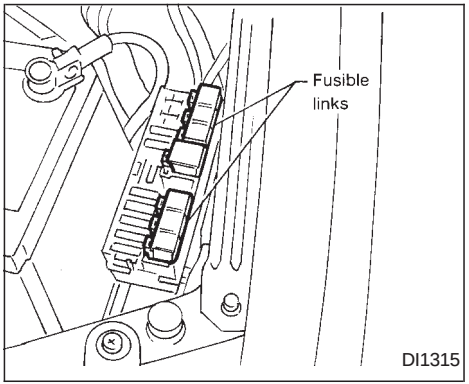

If the electrical equipment does not operate and fuses are in good condition, check the fusible links. If any of these fusible links are melted, replace only with genuine NISSAN parts.

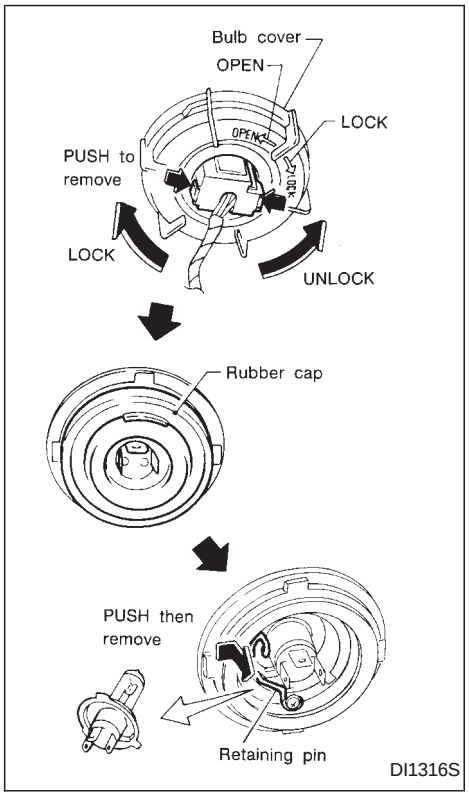

HEADLIGHTS

The headlight is a semi-sealed beam type which uses a replaceable headlight (halogen) bulb.

⚠ CAUTION

- **High pressure halogen gas is sealed inside the halogen bulb. The bulb may break if the glass envelope is scratched or the bulb is dropped.**
- **When handling the bulb, do not touch the glass envelope.**

Replacing the headlight bulb

1. Open the engine hood.
2. Disconnect the negative (—) battery cable.
3. Disconnect the electrical connector from the rear end of the bulb.
4. Turn the bulb cover counterclockwise, then remove it.
5. Pull off the rubber cap.
6. Push and turn the retaining pin to loosen it.
7. Remove the headlight bulb. Do not shake or rotate the bulb when removing it.
8. Install the new bulb in the reverse order of removal.

- **Be sure the lip of the rubber cap contacts the headlight body.**

DO NOT TOUCH THE BULB.

⚠ CAUTION

- **Use the same number and wattage as originally installed:**

  Wattage 60/55
  Bulb No. HB2
- **Aiming is not necessary after replacing the bulb.**
- **Do not leave the bulb out of the headlight reflector for a long period of time as dust, moisture, and smoke may enter the headlight body and affect the performance of the headlight.**

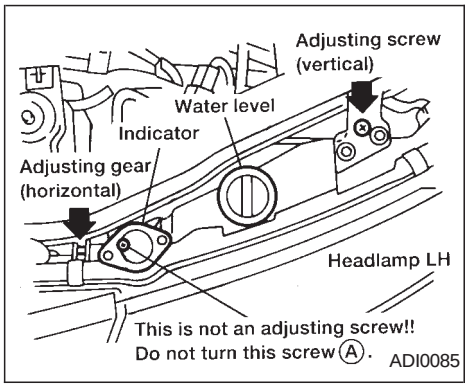

HEADLIGHT AIMING ADJUSTMENT

Before performing aiming adjustment, make sure of the following:

a. Keep all of the tires inflated to the correct pressure.

b. Place the vehicle on level ground.

c. See that the vehicle is unloaded (except for full levels of coolant, engine oil and fuel, and spare tire, jack, and tools). Have the driver or an equivalent weight placed in the driver's seat.

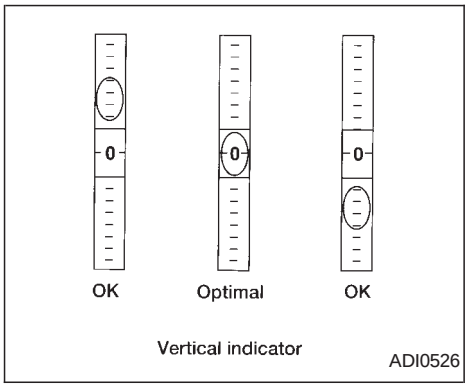

Low beam

1. Open the hood.
2. Adjust the vertical indicator by turning the adjusting screw with a Phillips screwdriver. The bubble in the gauge should be centered on the ''0'' mark.

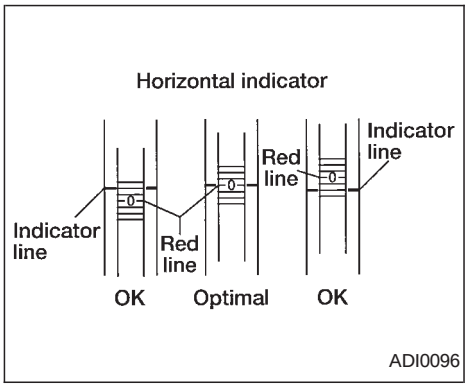

3. Adjust the horizontal indicator by turning the adjusting screw with a Phillips screwdriver.

   The inner red line with the ''0'' mark should align with the indicator line. Never turn screw Ⓐ as indicated in earlier illustration.

ADJUSTMENT AFTER HEADLIGHT ASSEMBLY REPLACEMENT

If the vehicle has had front body repair and the headlight assembly has been replaced, the aiming should be checked using the aiming chart as shown in the illustration.

a. Adjust headlights so that main axis of light is parallel to center line of body and is aligned with point P shown in the illustration.

b. Dotted lines in illustration show center of headlight.
H: Horizontal center line of headlights
W: Distance between each headlight center
L: Distance between the headlights and the wall that the lights are tested against. 7.62 m (25 ft)
C: Distance below the horizontal center line of the light ("H") used in determining the main axis of light. 106 mm (4.17 in)
H-C = M
M = main axis of light

Even if the horizontal indicator does not align with the indicator line or the bubble is not centered in the water level after aiming by the chart, it is acceptable if the lines are within the OK ranges.

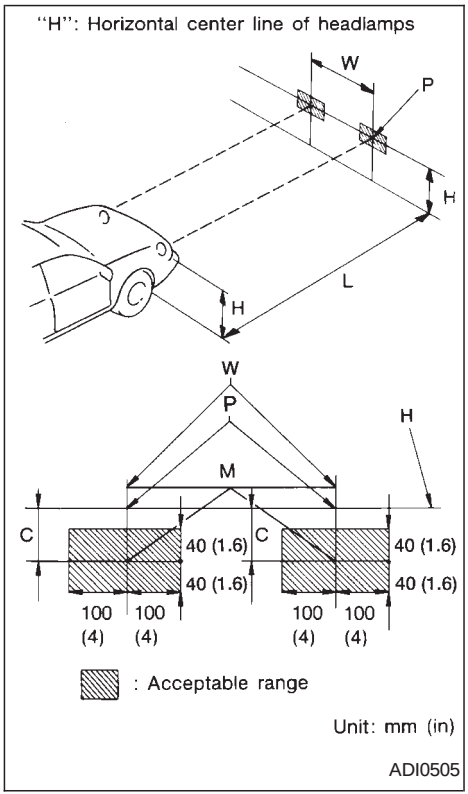

BULB REPLACEMENT

Item	Wattage (W)	Bulb No.
Headlight (Semi-sealed beam)		
High/Low	60/55	HB2
Cornering light/Front parking light[1]	27/5	1157
Front parking light[2]	5	168
Front turn signal light	27	1156NA
Front side marker light	3.8	194
Front fog light	55	H3
Rear combination light:		
Turn signal	27	1156NA
Stop/Tail	27/8	1157
Back-up	27	1156
Rear side marker light	3.8	194
License plate light	5	168
High-mounted stop light	13	912
Interior light	8	
Front personal light	10	
Trunk light	3.4	158
Glove box light (if so equipped)	3.4	158

1: Models with cornering light
2: Models without cornering light

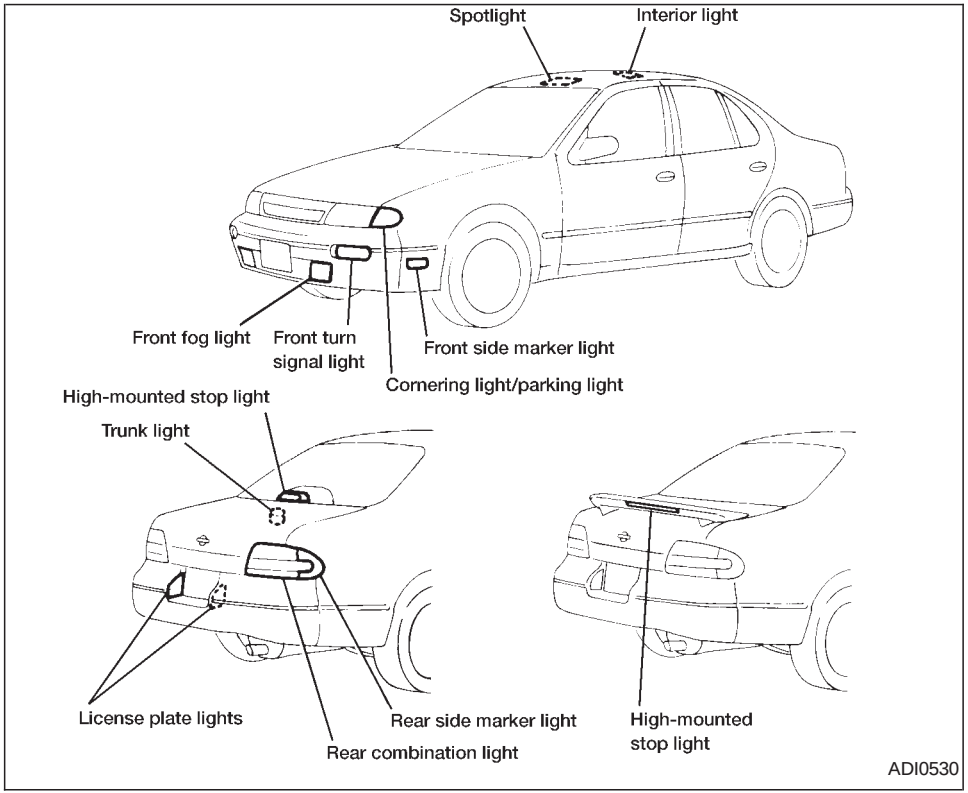

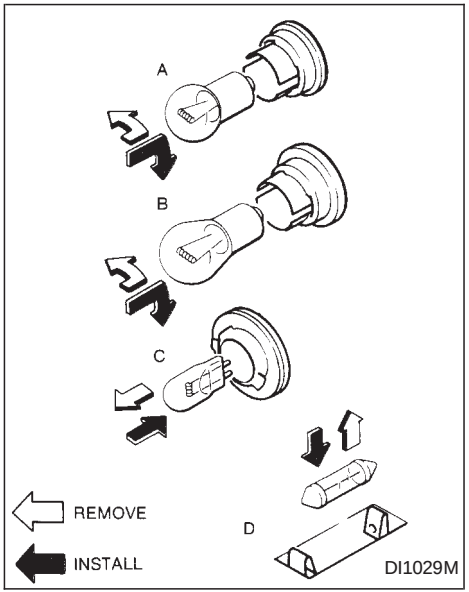

Replacement procedures

All other lights are either type A, B, C or D. When replacing a bulb, first remove the lens and/or cover.

Front turn signal light

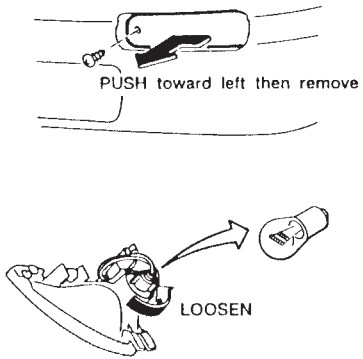

Cornering light/parking light

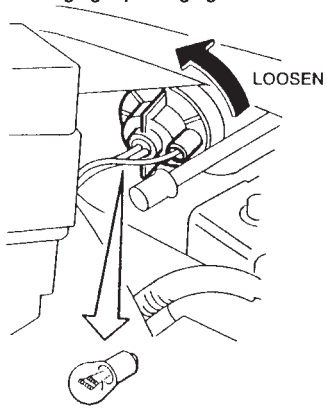

Front side marker light

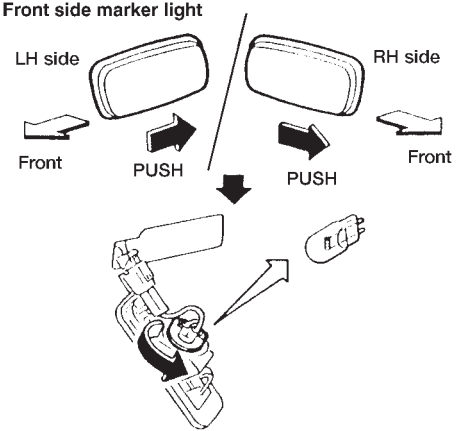

Interior light

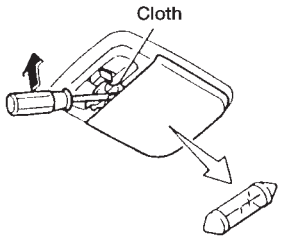

Front spotlight (Type A)

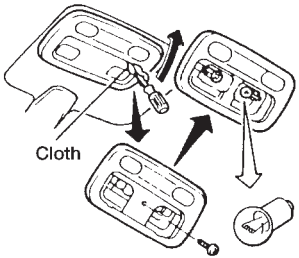

(Type B)

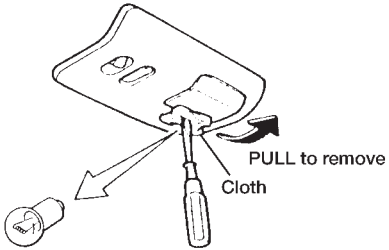

ADI0531

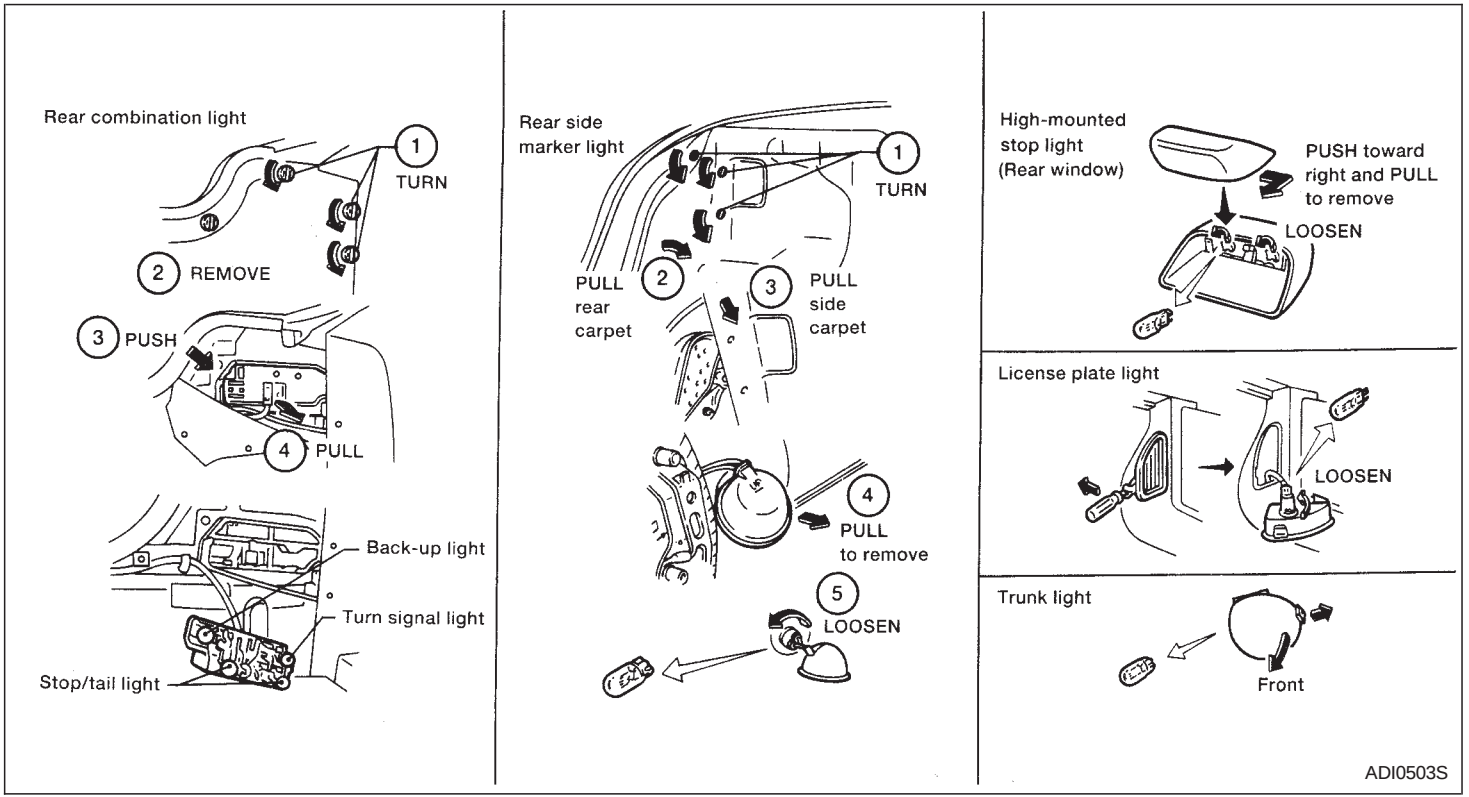
Rear combination light
1
TURN
2
REMOVE
3
PUSH
4
PULL
Back-up light
Turn signal light
Stop/tail light
Rear side
marker light
1
TURN
PULL
rear
carpet
2
3
PULL
side
carpet
4
PULL
to remove
5
LOOSEN
High-mounted
stop light
(Rear window)
PUSH toward
right and PULL
to remove
LOOSEN
License plate light
LOOSEN
Trunk light
Front
ADI0503S

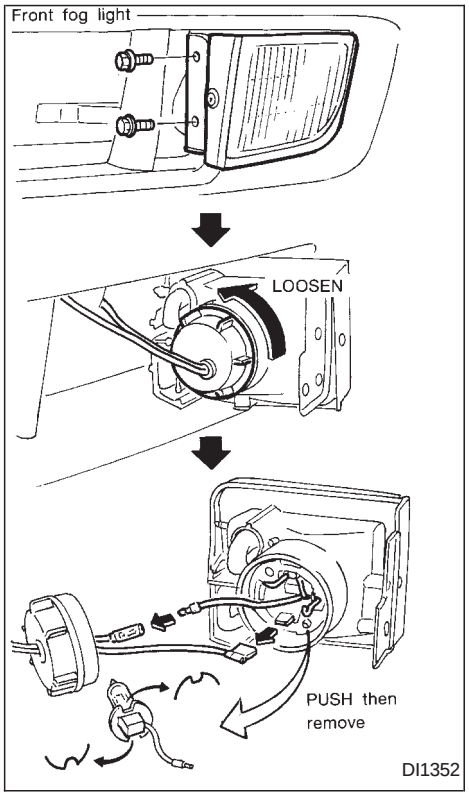

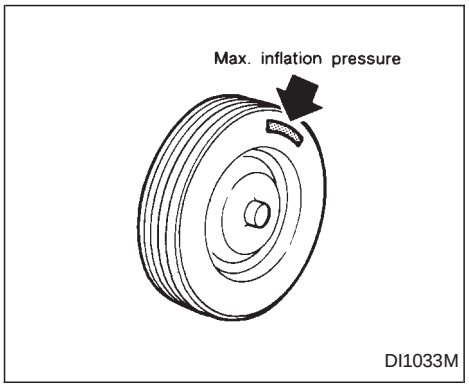

If you have a flat tire, see the ''In case of emergency'' section.

Maximum inflation pressure

Do not exceed the maximum inflation pressures shown on the side wall of the tire.

Tire inflation pressure

Periodically check the tire pressure (including spare). Incorrect tire pressure may adversely affect tire life and vehicle handling. Tire pressure should be checked when tires are COLD. Tires are considered COLD after the vehicle has been parked for three or more hours, or driven less than 1 mile (1.6 km). COLD tire pressures are shown on the tire placard affixed to the center console lid.

⚠ WARNING

- **The vehicle weight capacity is indicated on the tire placard. Do not load your vehicle beyond this capacity. Overloading your vehicle may result in reduced tire life, unsafe operating conditions due to premature tire failure, or unfavorable handling characteristics and could also lead to a serious accident. Loading beyond the specified capacity may also result in failure of other vehicle components.**
- **Before taking a long trip, or whenever you have loaded your vehicle heavily, use a tire pressure gauge to ensure that the tire pressure is at the specified level.**
- **Do not drive your vehicle over 85 MPH (140 km/h) unless it is equipped with high speed capability tires. Driving faster than 85 MPH (140 km/h) may result in tire failure, loss of control and possible injury.**

Types of tires

⚠ CAUTION

When changing or replacing tires, be sure all four tires are of the same type (i.e., Summer, All Season or Snow) and construction. Your NISSAN dealer may be able to help you with information about tire type, size, speed rating and availability. Replacement tires may have a lower speed rating than the factory equipped tires, and may not match the potential maximum vehicle speed. Never exceed the maximum speed rating of the tire.

All Season tires

NISSAN specifies All Season tires on some models to provide good performance for use all year around, including snowy and icy road conditions. All Season Tires are identified by ‘‘ALL SEASON’’ and/or ‘‘M&S’’ on the tire sidewall. Snow tires have better snow traction than All Season tires and may be more appropriate in some areas.

Summer tires

NISSAN specifies summer tires on some models to provide superior performance on dry roads. Summer tire performance in snow and ice is substantially reduced. Summer tires do not have the tire traction rating ‘‘M&S’’ on the tire sidewall.

If you plan to operate your vehicle in snowy or icy conditions, NISSAN recommends the use of ‘‘SNOW’’ or ‘‘ALL SEASON’’ tires on all four wheels.

Snow tires

If snow tires are needed, it is necessary to select tires equivalent in size and load rating to the original equipment tires. If you do not, it can adversely affect the safety and handling of your vehicle.

Generally, snow tires have lower speed ratings than factory equipped tires and may not match the potential maximum vehicle speed. Never exceed the maximum speed rating of the tire.

For additional traction on icy roads, studded tires may be used. However, some provinces and states prohibit their use. Check local, state and provincial laws before installing studded tires. Skid and traction capabilities of studded snow tires on wet or dry surfaces may be poorer than that of non-studded snow tires.

Tire chains

Use of tire chains may be prohibited according to location. Check the local laws before installing tire chains. When installing tire chains, make sure they are of proper size for the tires on your vehicle and are installed according to the chain manufacturer’s suggestions. **Use only SAE class ‘‘S’’ chains.** Other types may damage your vehicle. Use chain tensioners when recommended by the tire chain manufacturer to ensure a tight fit. Loose end links of the tire chain must be secured or removed to prevent the possibility of whipping action damage to the fenders or underbody. If possible, avoid fully loading your vehicle when using tire chains. In addition, drive at a reduced speed. Otherwise, your vehicle may be damaged and/or vehicle handling and performance may be adversely affected.

Never install tire chains on T-type spare tires. Do not use tire chains on dry roads.

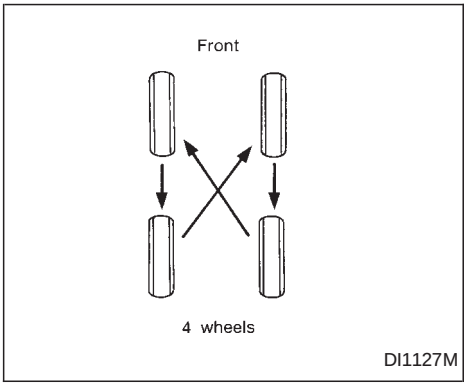

Tire rotation

NISSAN recommends that tires be rotated every 7,500 miles (12,000 km).

Tighten wheel nuts to 72 to 87 ft-lb (98 to 118 N·m).

See ‘‘Flat tire’’ in the ‘‘In case of emergency’’ section for tire replacing procedures.

WARNING

- **After rotating the tires, adjust the tire pressure.**
- **Retighten the wheel nuts after the aluminum wheels have been run for the first 600 miles (1,000 km) (also in cases of a flat tire, etc.).**
- **Do not include the T-type spare tire or any other small size spare tire in the tire rotation.**

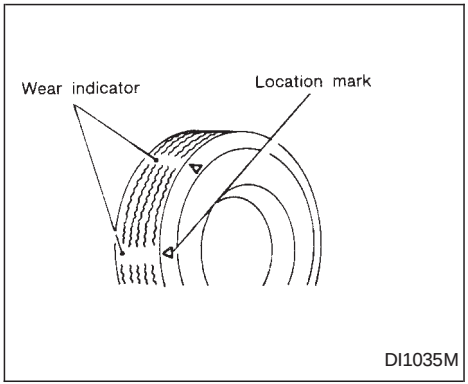

Tire wear and damage

WARNING

- **Tires should be periodically inspected for wear, cracking, bulging, or objects caught in the tread. If excessive wear, cracks, bulging, or deep cuts are found, the tire should be replaced.**
- **The original tires have a built-in tread wear indicator. When the wear indicator is visible, the tire should be replaced.**

- **Improper service for a T-type spare tire may result in serious personal injury. If it is necessary to repair the T-type spare tire, contact your NISSAN dealer.**

Changing tires and wheels

When replacing a tire, use the same size, speed rating and load carrying capacity as originally equipped. Recommended types and sizes are shown in ‘‘Wheels and tires’’ in the ‘‘Technical and consumer information’’ section.

WARNING

- **The use of tires other than those recommended or the mixed use of tires of different brands, construction (bias, bias-belted or radial), or tread patterns can adversely affect the ride, braking, handling, ground clearance, body-to-tire clearance, tire chain clearance, speedometer calibration, headlight aim and bumper height. Some of these effects may lead to accidents and could result in serious personal injury.**
- **If the wheels are changed for any reason, always replace with wheels which have the same offset dimension. Wheels of a different offset could cause early tire wear, possibly degraded vehicle handling characteristics and/or interference with the brake discs/ drums. Such interference can lead to decreased braking efficiency and/or early brake pad/shoe wear.**
- **Do not install a deformed wheel or tire even if it has been repaired. Such wheels or tires could have structural damage and could fail without warning.**

Wheel balance

Unbalanced wheels may affect vehicle handling and tire life. Even with regular use, wheels can get out of balance. Therefore, they should be balanced as required.

Wheel balance service should be performed with the wheels off the vehicle. Spin balancing the front wheels on the vehicle could lead to transmission damage.

Care of wheels

- Wash the wheels when washing the vehicle to maintain their appearance.
- Clean the inner side of the wheels when

the wheel is changed or the underside of the vehicle is washed.

- Do not use abrasive cleaners when washing the wheels.
- Inspect wheel rims regularly for dents or corrosion. Such damage may cause loss of pressure or poor seal at the tire bead.
- NISSAN recommends waxing the road wheels to protect against road salt in areas where it is used during winter.

Spare tire (T-type spare tire)

Observe the following precautions if the T-type spare tire must be used, otherwise your vehicle could be damaged or involved in an accident:

⚠ CAUTION

- **The T-type spare tire should be used only for an emergency. It should be replaced by the standard tire at the first opportunity.**
- **Drive carefully while the T-type spare tire is installed. Avoid sharp turns and abrupt braking while driving.**
- **Periodically check tire inflation pressure, and always keep it at 60 psi (420 kPa, 4.2 bar).**
- **Do not drive your vehicle at speeds faster than 50 MPH (80 km/h).**
- **Do not use tire chains on a T-type spare tire. Tire chains will not fit properly on the T-type spare tire and may cause damage to the vehicle.**
- **When driving on roads covered with snow or ice, the T-type spare tire should be used on the rear wheel and the original tire used on the front wheels (drive wheels). Use tire chains only on the front two original tires.**
- **Tire tread of the T-type spare tire will wear at a faster rate than the original tire. Replace the T-type spare tire as soon as the tread wear indicators appear.**
- **Because the T-type spare tire is smaller than the original tire, ground clearance is reduced. To avoid damage to the vehicle do not drive over obstacles. Also do not drive the vehicle through an automatic car wash since it may get caught.**
- **Do not use the T-type spare tire on other vehicles.**
- **Do not use more than one T-type spare tire at the same time.**
- **Do not tow a trailer while the T-type spare tire is installed.**

8 Maintenance schedule

General maintenance 8-2
Outside the vehicle 8-2
Inside the vehicle 8-3
Under the hood and vehicle.....8-4
Periodic maintenance schedules 8-5
Schedule 1 8-5
Schedule 2 8-5
Explanation of maintenance items.....8-10

Your new NISSAN has been designed to have minimum maintenance requirements with longer service intervals to save you both time and money. However, some day-to-day and regular maintenance is essential to maintain your NISSAN's good mechanical condition, as well as its emission and engine performance.

It is the owner's responsibility to make sure the specified periodic maintenance, as well as general maintenance, is performed.

As the vehicle owner, you are the only one who can ensure that your vehicle receives the proper maintenance care. You are a vital link in the maintenance chain.

General maintenance

General maintenance includes those items which should be checked during normal day-to-day operation of the vehicle. They are essential if your vehicle is to continue to operate properly. It is your responsibility to perform these procedures regularly as prescribed.

These checks or inspections can be done by yourself, a qualified technician or, if you prefer, your NISSAN dealer.

Periodic maintenance

The maintenance items listed in this part are required to be serviced at regular intervals.

However, under severe driving conditions, additional or more frequent maintenance is required.

Where to go for service

If maintenance service is required or your vehicle appears to malfunction, have the systems checked and tuned by an authorized NISSAN dealer.

NISSAN technicians are well-trained specialists and are kept up to date with the latest service information through technical bulletins, service tips, and in-dealership training programs. They are completely qualified to work on NISSAN's vehicles **before** they work on your vehicle, rather than after they have worked on it.

You can be confident that your NISSAN dealer's service department performs the best job to meet the maintenance requirements on your vehicle — in a reliable and economic way.

During the normal day-to-day operation of the vehicle, general maintenance should be performed regularly as prescribed in this section. If you detect any unusual sounds, vibrations or smells, be sure to check for the cause or have your NISSAN dealer do it promptly. In addition, you should notify your NISSAN dealer if you think repairs are required.

When performing any checks or maintenance work, closely observe the precautions in the ''Do-it-yourself operations'' section.

OUTSIDE THE VEHICLE

The maintenance items listed here should be performed from time to time, unless otherwise specified.

Additional information on the items marked with ''*'' can be found in the ''Do-it- yourself operations'' section.

Tires* — Check the pressure with a gauge periodically when at a service station, including the spare, and adjust to the specified pressure if necessary. Check carefully for damage, cuts or excessive wear.

Wheel nuts* — When checking the tires, make sure no nuts are missing, and check for any loose nuts. Tighten if necessary.

Tire rotation* — Tires should be rotated every 7,500 miles (12,000 km).

Wheel alignment and balance — If the vehicle should pull to either side while driving on a straight and level road, or if you detect uneven or abnormal tire wear, there may be a need for wheel alignment.

If the steering wheel or seat vibrates at normal highway speeds, wheel balancing may be needed.

Windshield wiper blades* — Check for cracks or wear if they do not wipe properly.

Doors and engine hood — Check that all doors and the engine hood operate properly. Also ensure all latches lock securely. Lubricate hinges, latches, rollers and links if necessary. Make sure the secondary latch keeps the hood from opening when the primary latch is released.

When driving in areas using road salt or other corrosive materials, check lubrication frequently.

Lights* — Make sure the headlights, stop lights, tail lights, turn signal lights, and other lights are all operating properly and installed securely. Also check headlight aim.

INSIDE THE VEHICLE

The maintenance items listed here should be checked on a regular basis, such as when performing periodic maintenance, cleaning the vehicle, etc.

Warning lights and chimes — Make sure all warning lights and buzzers/chimes are operating properly.

Windshield wiper and washer* — Check that the wipers and washer operate properly and that the wipers do not streak.

Windshield defroster — Check that the air comes out of the defroster outlets properly and in sufficient quantity when operating the heater or air conditioner.

Steering wheel — Check for changes in the steering conditions, such as excessive freeplay, hard steering or strange noises.

Seats — Check seat position controls such as seat adjusters, seatback recliner, etc. to ensure they operate smoothly and all latches lock securely in every position. Check that the head restraints move up and down smoothly and the locks (if so equipped) hold securely in all latched positions.

Seat belts — Check that all parts of the seat belt system (for example, buckles, anchors, adjusters and retractors) operate properly and smoothly, and are installed securely. Check the belt webbing for cuts, fraying, wear or damage.

Accelerator pedal — Check the pedal for smooth operation and make sure the pedal does not catch or require uneven effort. Keep the floor mats away from the pedal.

Clutch pedal* — Make sure the pedal operates smoothly and check that it has the proper free travel.

Brakes — Check that the brakes do not pull the vehicle to one side when applied.

Brake pedal* — Check the pedal for smooth operation and make sure it has the proper distance under it when depressed fully. Check the brake booster function. Be certain to keep floor mats away from the pedal.

Parking brake* — Check that the lever has the proper travel and confirm that your vehicle is held securely on a fairly steep hill with only the parking brake applied.

Automatic transmission ‘‘Park’’ mechanism — On a fairly steep hill check that your vehicle is held securely with the gearshift lever in the P position without applying any brakes.

UNDER THE HOOD AND VEHICLE

The maintenance items listed here should be checked periodically, such as each time you check the engine oil or refuel.

Additional information on the items marked with “*” can be found in the “Do-It-Yourself operations” section.

Windshield washer fluid* — Check that there is adequate fluid in the tank.

Engine coolant level* — Check the coolant level when the engine is cold.

Radiator and hoses — Check the front of the radiator and clean off any dirt, insects, leaves, etc., that may have accumulated. Make sure the hoses have no cracks, deformation, rot or loose connections.

Brake and clutch fluid levels* — Make sure that the brake and clutch fluid level is between the MAX and MIN lines on the reservoir.

Battery* — Check the fluid level in each cell. It should be between the MAX and MIN lines.

Engine drive belts* — Make sure that no belt is frayed, worn, cracked or oily.

Engine oil level* — Check the level after parking the vehicle on a level spot and turning off the engine. Wait a few minutes for the oil to drain back into the oil pan.

Power steering fluid level* and lines — Check the level when the fluid is cold and the engine is turned off. Check the lines for proper attachment, leaks, cracks, etc.

Automatic transmission fluid level* — Check the level after putting the shift lever in P with the engine idling.

Exhaust system — Make sure there are no cracks, holes, loose joints or supports. If the sound of the exhaust seems unusual or there is a smell of exhaust fumes, immediately have the exhaust system inspected by a qualified individual. (See the carbon monoxide warning in the ‘‘Starting and driving’’ section.)

Underbody — The underbody is frequently exposed to corrosive substances such as those used on icy roads or to control dust. It is very important to remove these substances, otherwise rust forms on the floor pan, frame, fuel lines and around the exhaust system. At the end of winter, the underbody should be thoroughly flushed with plain water, being careful to clean those areas where mud and dirt may accumulate. See the ‘‘Appearance and interior care’’ section for additional information.

Fluid leaks — Check under the vehicle for fuel, oil, water or other fluid leaks after the vehicle has been parked for a while. Water dripping from the air conditioner after use is normal. If you should notice any leaks or if gasoline fumes are evident, check for the cause and have it corrected immediately.

PERIODIC MAINTENANCE SCHEDULES

To ensure smooth, trouble-free, safe and economical driving, NISSAN provides two different maintenance schedules that may be used, depending upon the conditions in which you usually drive. These schedules contain both distance and time intervals, up to 60,000 miles (96,000 km)/48 months. For most people, the odometer reading indicates when service is needed. However, if you drive very little, your vehicle should be serviced at the regular time intervals shown in the schedule. **After 60,000 miles (96,000 km) or 48 months, continue periodic maintenance at the same mileage/time intervals.**

SCHEDULE 1

Follow Periodic Maintenance Schedule 1 if your driving habits frequently include one or more of the following driving conditions:

- **Repeated short trips of less than 5 miles (8 km).**
- **Repeated short trips of less than 10 miles (16 km) with outside temperatures remaining below freezing.**
- **Operating in hot weather during stop-and-go ‘‘rush hour’’ traffic.**
- **Extensive idling and/or low speed driving for long distances, such as police, taxi or door-to-door delivery use.**
- **Driving in dusty conditions.**
- **Driving on rough, muddy, or salt spread roads.**
- **Towing a trailer, using a camper or a car-top carrier.**

SCHEDULE 2

Follow Periodic Maintenance Schedule 2 if none of the driving conditions shown in Schedule 1 apply to your driving habits.

Schedule 1

Abbreviations: R = Replace I = Inspect. Correct or replace if necessary. [ ]: At the mileage intervals only

MAINTENANCE OPERATION		MAINTENANCE INTERVAL															
Perform at number of miles, kilometers or months, whichever comes first.	Miles x 1,000	3.75	7.5	11.25	15	18.75	22.5	26.25	30	33.75	37.5	41.25	45	48.75	52.5	56.25	60
	(km x 1,000)	(6)	(12)	(18)	(24)	(30)	(36)	(42)	(48)	(54)	(60)	(66)	(72)	(78)	(84)	(90)	(96)
	Months	3	6	9	12	15	18	21	24	27	30	33	36	39	42	45	48
Emission control system maintenance																	
Drive belts	See NOTE (1)																I*
Air cleaner filter	See NOTE (2)								[R]								[R]
Vapor lines									I*								I*
Fuel lines									I*								I*
Fuel filter	See NOTE (3)*																
Engine coolant	See NOTE (4)*																R*
Engine oil		R	R	R	R	R	R	R	R	R	R	R	R	R	R	R	R
Engine oil filter		R	R	R	R	R	R	R	R	R	R	R	R	R	R	R	R
Spark plugs									[R]								[R]
Intake & exhaust valve clearance	See NOTE (5)																

NOTE: (1) After 60,000 miles (96,000 km) or 48 months, inspect every 15,000 miles (24,000 km) or 12 months.
(2) If operating mainly in dusty conditions, more frequent maintenance may be required.
(3) If vehicle is operated under extremely adverse weather conditions or in areas where ambient temperatures are either extremely low or extremely high, the filters might become clogged. In such an event, replace them immediately.
(4) After 60,000 miles (96,000 km) or 48 months, replace every 30,000 miles (48,000 km) or 24 months.
(5) If valve noise increases, inspect valve clearance.
*** Maintenance items and intervals marked with "*" are recommended by NISSAN for reliable vehicle operation. The owner need not perform such maintenance in order to maintain the emission warranty or manufacturer recall liability. Other maintenance items and intervals are required.**

Abbreviations: I = Inspect. Correct or replace if necessary.

MAINTENANCE OPERATION		MAINTENANCE INTERVAL							
Perform at number of miles, kilometers or months, whichever comes first.	Miles x 1,000	7.5	15	22.5	30	37.5	45	52.5	60
	(km x 1,000)	(12)	(24)	(36)	(48)	(60)	(72)	(84)	(96)
	Months	6	12	18	24	30	36	42	48
Chassis and body maintenance									
Brake lines & cables			I		I		I		I
Brake pads, discs, drums & linings		I	I	I	I	I	I	I	I
Manual & automatic transmission fluid	See NOTE (2)		I		I		I		I
Steering gear & linkage, axle & suspension parts		I	I	I	I	I	I	I	I
Steering linkage ball joints & front suspension ball joints		I	I	I	I	I	I	I	I
Exhaust system		I	I	I	I	I	I	I	I
Front drive shaft boots		I	I	I	I	I	I	I	I
Supplemental air bag system	See NOTE (1)								

NOTE: (1) Inspect the supplemental air bag system 10 years after the date of manufacture as noted on the certification label located on the left front door pillar.

(2) If towing a trailer, using a camper or a car-top carrier, or driving on rough or muddy roads, change (not just inspect) fluid at every 30,000 miles (48,000 km) or 24 months.

Schedule 2

Abbreviations: R = Replace I = Inspect. Correct or replace if necessary. [ ]: At the mileage intervals only

MAINTENANCE OPERATION	MAINTENANCE INTERVAL								
Perform at number of miles, kilometers or months, whichever comes first.	Miles x 1,000	7.5	15	22.5	30	37.5	45	52.5	60
	(km x 1,000)	(12)	(24)	(36)	(48)	(60)	(72)	(84)	(96)
	Months	6	12	18	24	30	36	42	48
Emission control system maintenance									
Drive belts	See NOTE (1)								I*
Air cleaner filter					[R]				[R]
Vapor lines					I*				I*
Fuel lines					I*				I*
Fuel filter	See NOTE (2)*								
Engine coolant	See NOTE (3)								R*
Engine oil		R	R	R	R	R	R	R	R
Engine oil filter		R	R	R	R	R	R	R	R
Spark plugs					[R]				[R]
Intake & exhaust valve clearance	See NOTE (4)								

NOTE: (1) After 60,000 miles (96,000 km) or 48 months, inspect every 15,000 miles (24,000 km) or 12 months.
(2) If vehicle is operated under extremely adverse weather conditions or in areas where ambient temperatures are either extremely low or extremely high, the filters might become clogged. In such an event, replace them immediately.
(3) After 60,000 miles (96,000 km) or 48 months, replace every 30,000 miles (48,000 km) or 24 months.
(4) If valve noise increases, inspect valve clearance.
*** Maintenance items and intervals marked with "*" are recommended by NISSAN for reliable vehicle operation. The owner need not perform such maintenance in order to maintain the emission warranty or manufacturer recall liability. Other maintenance items and intervals are required.**

Abbreviations: I = Inspect. Correct or replace if necessary.

MAINTENANCE OPERATION		MAINTENANCE INTERVAL							
Perform at number of miles, kilometers or months, whichever comes first.	Miles x 1,000	7.5	15	22.5	30	37.5	45	52.5	60
	(km x 1,000)	(12)	(24)	(36)	(48)	(60)	(72)	(84)	(96)
	Months	6	12	18	24	30	36	42	48
Chassis and body maintenance									
Brake lines & cables			I		I		I		I
Brake pads, discs, drums & linings			I		I		I		I
Manual & automatic transmission fluid			I		I		I		I
Steering gear linkage, axle & suspension parts					I				I
Exhaust system					I				I
Front drive shaft boots			I		I		I		I
Supplemental air bag system	See NOTE (1)								

NOTE: (1) Inspect the supplemental air bag system 10 years after the date of manufacture as noted on the certification label located on the left front door pillar.

EXPLANATION OF MAINTENANCE ITEMS

Additional information on the following items marked with ''*'' is found in the ''Do-it- yourself operations'' section.

Emission control system maintenance

Drive belts* — Check drive belts for wear, fraying or cracking and also for proper tension. Replace the drive belts if damaged.

Air cleaner filter — Under normal driving conditions, the air cleaner filter should be replaced in accordance with the maintenance schedule. However, driving the vehicle in dusty areas may cause more rapid clogging of the element. Consequently, the element may have to be replaced more frequently.

Vapor lines — Check vapor lines and connections for failure or looseness. If leaks are found, replace them.

Fuel lines — Check the fuel hoses, piping and connections for leaks, looseness or deterioration. Replace any parts if they are damaged.

Fuel filter — If the vehicle is operated under extremely adverse weather conditions or in areas where ambient temperatures are either extremely low or extremely high, the filter might become clogged. In such an event, replace the filter immediately.

Engine coolant* — Drain and flush the cooling system.

Engine oil & oil filter* — Under normal driving conditions, the engine oil and oil filter should be replaced in accordance with the maintenance schedule. However, under severe driving conditions, they may have to be replaced more frequently.

Spark plugs* — Replace with new plugs having the correct heat range.

Intake & exhaust valve clearance — Check the valve clearance if valve noise increases.

Chassis and body maintenance

Brake lines & cables — Check the brake lines and hoses (including brake booster vacuum hoses, connections & check valve) and parking brake cables for proper attachment, leaks, cracks, chafing, abrasion, deterioration, etc.

Brake pads, discs, drums & linings — Check these and the other neighboring brake components for wear, deterioration and leaks. Under severe driving conditions, they may have to be inspected more frequently.

Manual & automatic transmission fluid* — Check the fluid level and visually inspect for signs of leakage.

Under severe driving conditions, the fluid should be replaced at the specified interval.

Steering gear & linkage, axle & suspension parts, and drive shaft boots — Check for damage, looseness and leakage of oil or grease. Under severe driving conditions, more frequent inspection should be performed.

Steering linkage ball joints & front suspension ball joints — Check the ball joints for damage, looseness and grease leakage.

Exhaust system — Visually check the exhaust pipes, muffler, and hangers for proper attachment, leaks, cracks, chafing, abrasion, deterioration, etc. Under severe driving conditions, inspection should be performed more frequently.

Supplemental air bag system — Check the supplemental air bag system components for proper attachment, damage, deformities, cracks, rust, etc. Work around and on the supplemental air bag system should be done by an authorized NISSAN dealer.

9 Technical and consumer information

Capacities and recommended fuel/lubricants.....9-2
Fuel recommendation.....9-3
Engine oil and oil filter recommendation.....9-5
Recommended SAE viscosity number.....9-6
Air conditioner system refrigerant and lubricant recommendations.....9-7
Engine 9-8
Wheel/tire size.....9-9
Dimensions and weights.....9-9
Registering your vehicle in another country 9-10
Vehicle identification 9-10
Vehicle identification number plate 9-10
Vehicle identification number (chassis number).....9-10
Engine serial number 9-11
F.M.V.S.S. certification label.....9-11
Emission control information label 9-12
Tire placard 9-12
Air conditioner specification label.....9-12
Installing front license plate.....9-13
Vehicle loading information.....9-14
Trailer towing.....9-15
Uniform tire quality grading.....9-18
Emission control system warranty 9-19
Reporting safety defects (USA) 9-19
Readiness for inspection/maintenance (I/M) test.....9-20

CAPACITIES AND RECOMMENDED FUEL/ LUBRICANTS

The following are approximate capacities. The actual refill capacities may be a little different. When refilling, follow the procedure described in the ‘‘Do-it-yourself operations’’ section to determine the proper refill capacity.

	Capacity (Approximate)			Recommended Specifications
	US measure	Imp measure	Liter	
Fuel	15-7/8 gal	13-1/4 gal	60	Unleaded gasoline with an octane rating of at least 87 AKI (RON 91)*1
Engine oil (Refill)				
With oil filter	4 qt	3-3/8 qt	3.8	API SG or SH and Energy Conserving II *2 API Certification Mark *2
Without oil filter	3-3/4 qt	3-1/8 qt	3.5	
Cooling system				
With reservoir	8-1/4 qt	6-7/8 qt	7.8	Anti- freeze coolant (Ethylene glycol base)
Reservoir	3/4 qt	5/8 qt	0.7	
Manual transmission gear oil	—	—	—	API GL-4*3
Automatic transmission fluid	Refill to the proper level according to the instructions in the ‘‘Do-it-yourself operations’’ section.			Nissan Matic ‘D’ (Continental U.S. and Alaska) or Genuine Nissan Automatic Transmission Fluid (Canada). *4
Power steering fluid				Type DEXRON™ IIE, DEXRON™ III or equivalent.
Brake and clutch fluid				Genuine Nissan Brake Fluid*5 or equivalent DOT 3 (US FMVSS No. 116)
Multi-purpose grease	—	—	—	NLGI No. 2 (Lithium Complex)
Air conditioning system refrigerant	—	—	—	HFC-134a (R-134a)*6
Air conditioning system lubricant	—	—	—	Nissan A/C System Oil Type R or exact equivalent*6

*1: For further details, see ‘‘Fuel recommendation.’’
*2: For further details, see ‘‘Recommended SAE engine oil viscosity.’’
*3: For further details, see ‘‘Recommended SAE gear oil viscosity.’’
*4: Dexron® III/Mercon® or equivalent may also be used. Outside the Continental United States and Alaska contact a Nissan dealership for more information regarding suitable fluids, including recommended brand(s) of Dexron® III/Mercon® or Dexron® IIE/Mercon® Automatic Transmission Fluid.
*5: Available in mainland USA through your Nissan dealer.
*6: For further details, see ‘‘Air conditioner specification label.’’

FUEL RECOMMENDATION

All models are designed to operate on unleaded gasoline with an octane rating of at least 87 AKI (Anti-Knock Index) (Research octane number 91).

⚠ CAUTION

- **Using a fuel other than that specified could adversely affect the emission control devices and systems, and could also affect warranty coverage.**
- **Under no circumstances should a leaded gasoline be used, since this will damage the three way catalyst.**

Reformulated Gasoline

Some fuel suppliers are now producing reformulated gasolines. These gasolines are specially designed to reduce vehicle emissions. NISSAN supports efforts towards cleaner air and suggests that you use reformulated gasoline when available.

Gasoline containing oxygenates

Some fuel suppliers sell gasoline containing oxygenates such as ethanol, MTBE and methanol with or without advertising their presence. Nissan does not recommend the use of fuels of which the oxygenate content and the fuel compatibility for your NISSAN cannot be readily determined. If in doubt, ask your service station manager.

If you use oxygenate-blend gasoline, please take the following precautions as the usage of such fuels may cause vehicle performance problems and/or fuel system damage.

- **The fuel should be unleaded and have an octane rating no lower than that recommended for unleaded gasoline.**
- **If an oxygenate-blend other than a methanol blend is used, it should contain no more than 10% oxygenate. (MTBE may, however, be added up to 15%.)**
- **If a methanol blend is used, it should contain no more than 5% methanol (methyl alcohol, wood alcohol). It should also contain a suitable amount of appropriate cosolvents and corrosion inhibitors. If not properly formulated with appropriate cosolvents and corrosion inhibitors, such methanol blends may cause fuel system damage and/or vehicle performance problems. At this time, sufficient data is not available to ensure that all methanol blends are suitable for use in NISSAN vehicles.**

If any driveability problems such as engine stalling and difficult hot-starting are experienced after using oxygenate-blend fuels, immediately change to a non-oxygenate fuel or a fuel with a low blend of MTBE.

Take care not to spill gasoline during refueling. Gasoline containing oxygenates can cause paint damage.

Aftermarket Fuel Additives

NISSAN does not recommend the use of any fuel additives (i.e.: fuel injector cleaner, octane booster, intake valve deposit removers, etc.) which are sold commercially. Many of these additives intended for gum, varnish or deposit removal may contain active solvents or similar ingredients that can be harmful to the fuel system and engine.

Octane rating tips

In most parts of North America, you should use unleaded gasoline with an octane rating

of at least 87 AKI (Anti-Knock Index) number. However, you may use unleaded gasoline with an octane rating as low as 85 AKI (Anti-Knock Index) number in high altitude areas [over 4,000 ft (1,219 m)] such as: Colorado, Montana, New Mexico, Utah, Wyoming, northeastern Nevada, southern Idaho, western South Dakota, western Nebraska, and that part of Texas which is directly south of New Mexico.

Using unleaded gasoline with an octane rating lower than stated above can cause persistent, heavy ‘‘spark knock.’’ (‘‘Spark knock’’ is a metallic rapping noise.) If severe, this can lead to engine damage. If you detect a persistent heavy spark knock even when using gasoline of the stated octane rating, or if you hear steady spark knock while holding a steady speed on level roads, have your dealer correct the condition. Failure to correct the condition is misuse of the vehicle, for which NISSAN is not responsible.

Incorrect ignition timing results in knocking, after-run or overheating. This in turn may cause excessive fuel consumption or damage to the engine. If any of the above symptoms are encountered, have your vehicle checked at a NISSAN dealer or other competent service facility.

However, now and then you may notice light spark knock for a short time while accelerating or driving up hills. This is no cause for concern, because you get the greatest fuel benefit when there is light spark knock for a short time under heavy engine load.

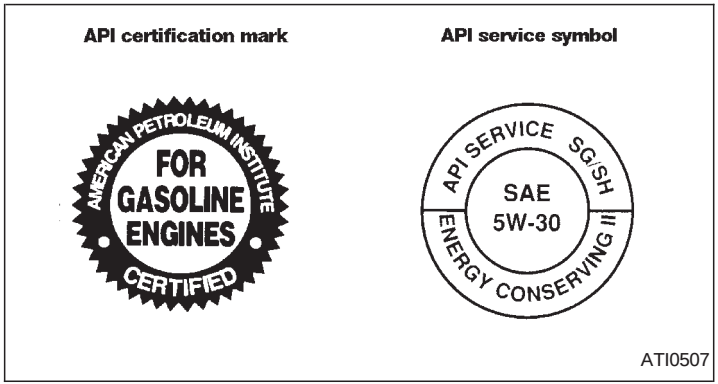

ENGINE OIL AND OIL FILTER RECOMMENDATION

Selecting the correct oil

It is essential to chose the correct quality and viscosity oil to ensure satisfactory engine life and performance. NISSAN recommends the use of a low friction oil (energy conserving oil) in order to improve fuel economy and conserve energy. Oils which do not have the specified quality label should not be used as they could cause engine damage.

Only those engine oils with the American Petroleum Institute (API) CERTIFICATION MARK on the front of the container should be used. This type of oil supersedes the existing API SG or SH and Energy Conserving II categories.

If you cannot find engine oil with the CERTIFICATION MARK, an API SG or SH and Energy Conserving II oil with API Service Symbol may be used. An oil with a single designation SG or SH, or in combination with other categories (for example, SG/CC or SG/CD) may also be used if one with the API CERTIFICATION MARK cannot be found.

Mineral based or synthetic type oils may be used in your NISSAN vehicle. These oils must however, meet the API quality and SAE viscosity ratings specified for your vehicle. Do not mix mineral based and synthetic type oils in the engine at the same time.

Oil additives

NISSAN does not recommend the use of oil additives. The use of an oil additive is not necessary when the proper oil type is used and maintenance intervals are followed.

Oil which may contain foreign matter or has been previously used should not be used.

Oil viscosity

The engine oil viscosity or thickness changes with temperature. Because of this, it is important that the engine oil viscosity be selected based on the temperatures at which the vehicle will be operated before the next oil change. The chart ‘‘Recommended SAE viscosity number’’ shows the recommended oil viscosities for the expected ambient temperatures. Choosing an oil viscosity other than that recommended could cause serious engine damage.

Selecting the correct oil filter

Your new vehicle is equipped with a high-quality genuine NISSAN oil filter. When replacing, use the genuine oil filter or its equivalent for the reason described in ‘‘Change intervals’’.

Change intervals

The oil and oil filter change intervals for your engine are based on the use of the specified quality oils and filters. Oil and filter other than the specified quality, or oil and filter change intervals longer than recommended could reduce engine life. Damage to engines caused by improper maintenance or use of incorrect oil and filter quality and/or viscosity is not covered by the new NISSAN vehicle warranties.

Your engine was filled with a high quality engine oil when it was built. You do not have to change the oil before the first recommended change interval. Oil and filter change intervals depend upon how you use your vehicle. Operation under the following conditions may require more frequent oil and filter changes:

— repeated short distance driving at cold outside temperatures,

— driving in dusty conditions,

— extensive idling,

— towing a trailer.

RECOMMENDED SAE VISCOSITY NUMBER

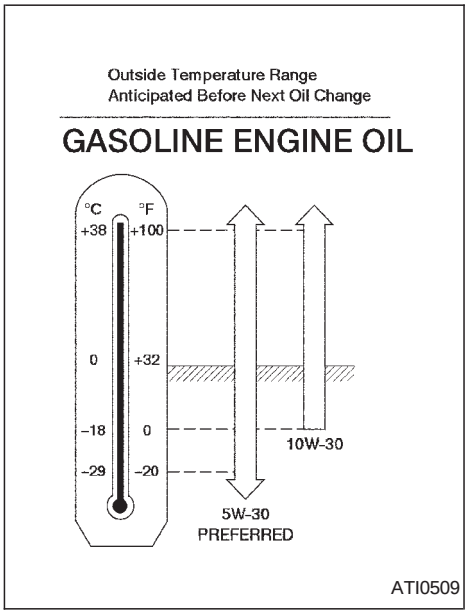

- **SAE 5W-30 viscosity oil is preferred for all temperatures. SAE 10W-30 viscosity oil may be used if the ambient temperature is above 0°F (-18°C).**

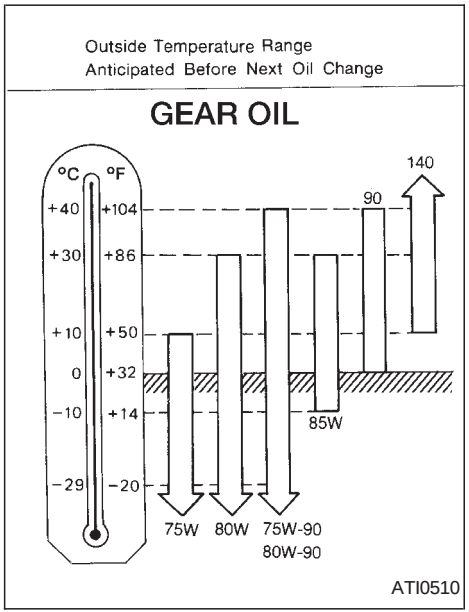

- **80W-90 is preferable for ambient temperatures below 104°F (40°C).**

AIR CONDITIONER SYSTEM REFRIGERANT AND LUBRICANT RECOMMENDATIONS

The air conditioner system in this NISSAN vehicle must be charged with the refrigerant HFC-134a (R-134a) and the lubricant, NISSAN A/C system oil Type R or the exact equivalents.

⚠ CAUTION

Use of any other refrigerant or lubricant will cause severe damage and you will need to replace your vehicle's entire air conditioner system.

The refrigerant HFC-134a (R-134a) in your NISSAN vehicle does not harm the earth's ozone layer. Although this refrigerant does not affect the earth's atmosphere, certain government regulations require the recovery and recycling of any refrigerant during automotive air conditioner system service. Your NISSAN dealer has the trained technicians and equipment needed to recover and recycle your air conditioner system refrigerant.

Contact your NISSAN dealer when servicing your air conditioner system.

Model		KA24DE
Type		Gasoline, 4-cycle, DOHC
Cylinder arrangement		4-cylinder, in-line
Bore x Stroke	in (mm)	3.504 x 3.780 (89.0 x 96.0)
Displacement	cu in (cm^3)	145.7 (2,389)
Firing order		1-3-4-2
Idle speed	rpm	See the ‘‘Emission Control Label’’ on the underside of the hood.
Ignition timing (B.T.D.C.)	degree/rpm	
CO percentage at idle speed	[No air] %	
Spark plug		BKR5E-11 (Standard) BKR6E-11,BKR7E-11 (Cold)
Camshaft operation		Timing Chain
Spark plug gap	in (mm)	0.039 to 0.043 (1.0 to 1.1)
Generator belt size		
Width x Length	in (mm)	0.8409 x 52.56 (21.36 x 1,335)

The spark ignition system of this vehicle meets all requirements of the Canadian Interference - Causing Equipment Regulations.

WHEEL/TIRE SIZE

		Conventional	T type
Road wheel			
Steel		15 x 6JJ	15 x 4T
Aluminum		15 x 6JJ	—
Offset	in (mm)	1.77 (45)	1.57 (40)
Tire size		P205/60R15 90H	T125/70D15 T135/90R15*

*: With viscous L.S.D. (limited slip differential) (Canada only)

DIMENSIONS AND WEIGHTS

		Sedan
Overall length	in (mm)	180.5 (4,585)
Overall width	in (mm)	67.1 (1,705)
Overall height	in (mm)	55.9 (1,420)
Front tread	in (mm)	57.7 (1,465)
Rear tread	in (mm)	57.3 (1,455)
Wheelbase	in (mm)	103.1 (2,620)
Gross vehicle weight rating	lb (kg)	See the ‘‘F.M.V.S.S. certification label’’ on the driver side door pillar.
Gross axle weight rating		
Front	lb (kg)	
Rear	lb (kg)	

REGISTERING YOUR VEHICLE IN ANOTHER COUNTRY

When planning to travel in another country, you should first find out if the fuel available is suitable for your vehicle's engine.

Using fuel with an octane rating that is too low may cause engine damage. All gasoline vehicles must be operated with unleaded gasoline. Therefore, avoid taking your vehicle to areas where appropriate fuel is not available.

When transferring the registration of your vehicle to another country, state, province or district, it may be necessary to modify the vehicle to meet local laws and regulations.

The laws and regulations for motor vehicle emission control and safety standards vary according to the country, state, province or district; therefore, vehicle specifications may differ.

When any vehicle is to be taken into another country, state, province or district and registered, its modifications, transportation, and registration are the responsibility of the user. NISSAN is not responsible for any inconvenience that may result.

VEHICLE IDENTIFICATION

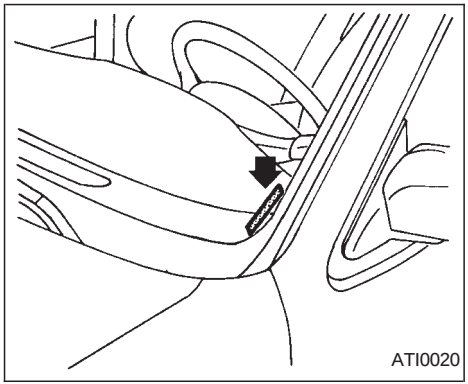

VEHICLE IDENTIFICATION NUMBER PLATE

The vehicle identification number plate is attached as shown. This number is the identification for your vehicle and is used in the vehicle registration.

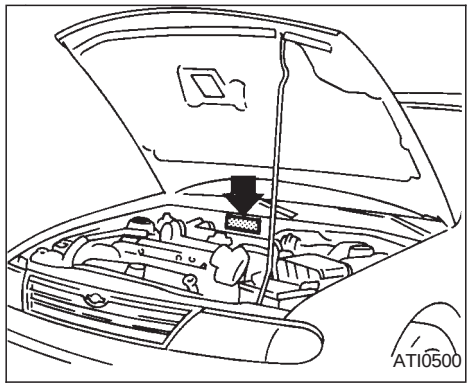

VEHICLE IDENTIFICATION NUMBER (Chassis number)

The number is stamped as shown.

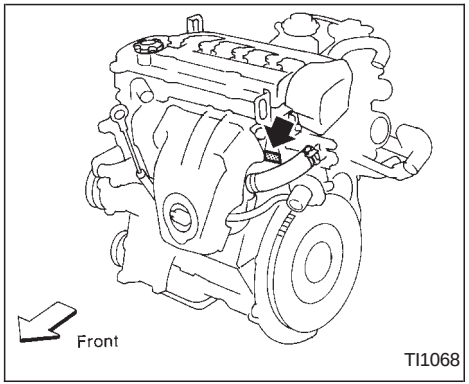

ENGINE SERIAL NUMBER

The number is stamped on the engine as shown.

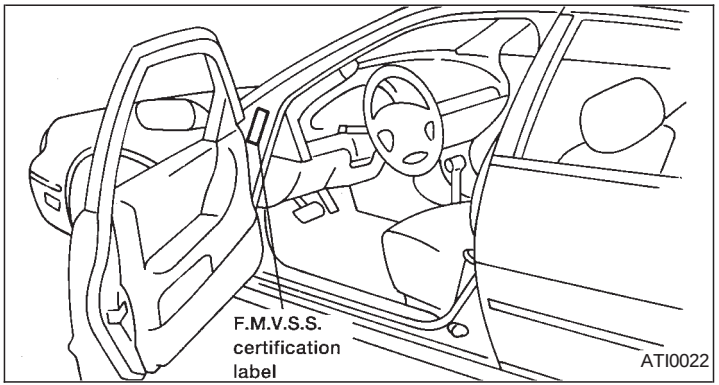

F.M.V.S.S. CERTIFICATION LABEL

The Federal Motor Vehicle Safety Standards (F.M.V.S.S.) certification label is affixed as shown. This label contains valuable vehicle information, such as: Gross Vehicle Weight Ratings (GVWR), Gross Axle Weight Rating (GAWR), month and year of manufacture, Vehicle Identification Number, (VIN), etc. Review it carefully.

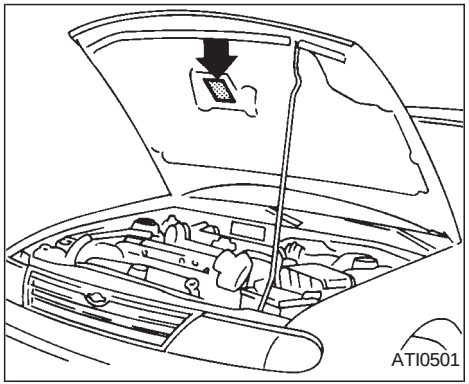

EMISSION CONTROL INFORMATION LABEL

The emission control information label is attached as shown.

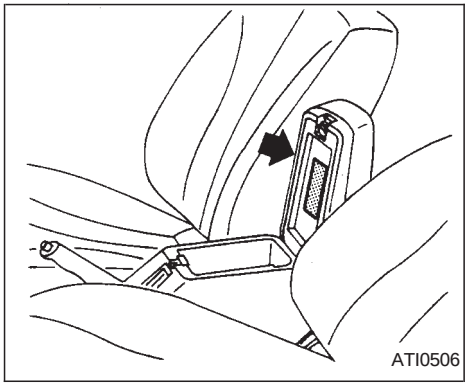

TIRE PLACARD

The cold tire pressure is shown on the tire placard affixed to the center console lid.

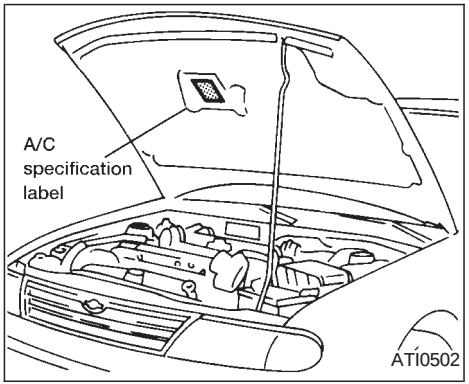

AIR CONDITIONER SPECIFICATION LABEL

The air conditioner specification label is affixed as shown.

INSTALLING FRONT LICENSE PLATE

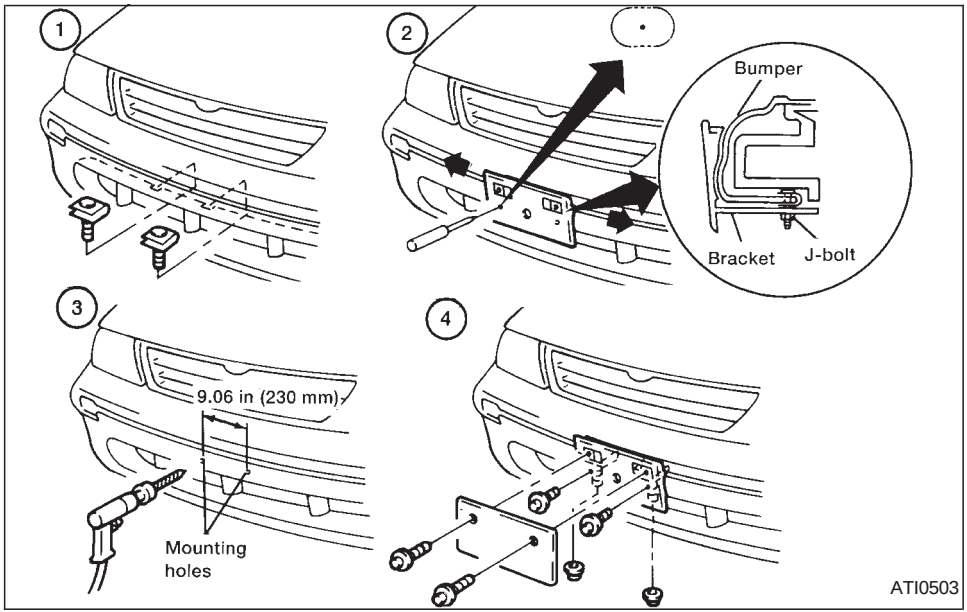

1. Insert J-bolts into the U-shaped grooves.
2. Temporarily place the bracket in position on the front bumper. **Be sure to align the curve of the bracket with the curve in the bumper.**
   - To determine where to drill the hole, shift the bracket to the right and use a felt-tip pen to draw an arc along the right side of each mounting hole. Next, shift the bracket to the left and draw an arc along the left side of each mounting hole.
   - Remove the bracket and connect the arcs to form ovals. Mark the point in the center of each oval. These are the ‘‘pilot’’ drilling locations.
3. Carefully drill two ‘‘pilot’’ holes using a 1/8 inch (3 mm) drill bit at the marked locations. **Be sure that the drill only goes through the fascia, or damage to the nut may occur.**
   - Check to be sure that the holes are aligned with the nuts located behind the fascia. If you are satisfied that the holes are properly placed, use a 5/16 inch (8 mm) drill bit to enlarge the holes. Use care to only drill through the fascia.
4. Install the bracket. Install the license plate with bolts that are no longer than 0.55 inch (14 mm). The bolts used to fasten the license plate to the bracket are not included in the attaching hardware that comes with the bracket.

⚠ WARNING

- **It is extremely dangerous to ride in a cargo area inside of a vehicle. In a collision, people riding in these areas are more likely to be seriously injured or killed.**
- **Do not allow people to ride in any area of your vehicle that is not equipped with seats and seat belts.**
- **Be sure everyone in your vehicle is in a seat and using a seat belt properly.**

Terms

It is important to familiarize yourself with the following terms before loading your vehicle:

- Curb Weight (actual weight of your vehicle) - vehicle weight including: standard and optional equipment, fluids, emergency tools, and spare tire assembly. This weight **does not** include passengers and cargo.
- GVW (Gross Vehicle Weight) - curb weight plus the combined weight of passengers and cargo.
- GVWR (Gross Vehicle Weight Rating) - maximum total weight (load) limit specified for the vehicle.
- GAWR (Gross Axle Weight Rating) - maximum weight (load) limit specified for the front or rear axle.

Determining Vehicle Load Capacity

The load capacity of this vehicle is determined by weight, not by available cargo space. For example, a luggage rack, bike carrier, cartop carrier or similar equipment does not increase load carrying capacity of your vehicle.

To determine vehicle load capacity:

Vehicle weight can be determined by using a commercial-grade scale, found at places such as a truck stop, gravel quarry, grain elevator, or a scrap metal recycling facility.

1) Determine the curb weight of your vehicle.
2) Compare the curb weight amount to the GVWR specified for your vehicle to determine how much more weight your vehicle can carry.
3) After loading (cargo and passengers), re-weigh your vehicle to determine if either GVWR or GAWR for your vehicle is exceeded. If GVWR is exceeded, remove cargo as necessary. If either the front or rear GAWR is exceeded, shift the load or remove cargo as necessary.

Loading Tips

- The GVW must not exceed GVWR or GAWR as specified on the FMVSS Certification Label.
- Do not load the front and rear axle to the GAWR. Doing so will exceed the GVWR.

⚠ WARNING

- **Properly secure all cargo to help prevent it from sliding or shifting. Do not place cargo higher than the seatbacks. In a sudden stop or collision, unsecured cargo could cause personal injury.**
- **Do not load your vehicle any heavier than the GVWR or the maximum front and rear GAWRs. If you do, parts on your vehicle can break, or it can change the way your vehicle handles. This could result in loss of control and cause personal injury.**
- **Overloading can shorten the life of your vehicle. Failures caused by overloading are not covered by your warranty.**

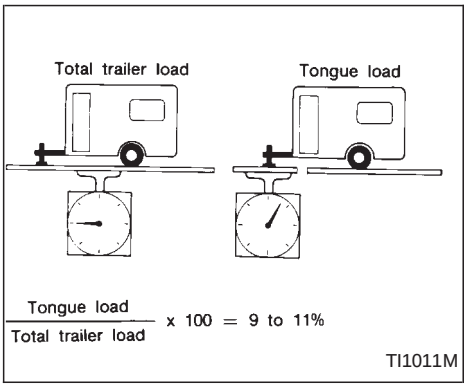

Your new vehicle was designed to be used primarily to carry passengers and cargo. Remember that towing a trailer will place additional loads on your vehicle's engine, drive train, steering, braking and other systems.

Information on trailer towing ability and the special equipment required should be obtained from your NISSAN dealer. He can obtain a **Nissan Trailer Towing Guide** for you.

Maximum load limits

Maximum trailer loads:

Never allow the total trailer load to exceed 1,000 lb (454 kg). The total trailer load equals trailer weight plus its cargo weight. Towing loads greater than 1,000 lb (454 kg) or using improper towing equipment could adversely affect vehicle handling, braking and performance.

⚠ WARNING

Vehicle damage and/or personal injury resulting from improper towing procedures is not covered by NISSAN warranties. Information on trailer towing and required towing equipment should be obtained from dealers who specialize in providing trailers or other towing equipment.

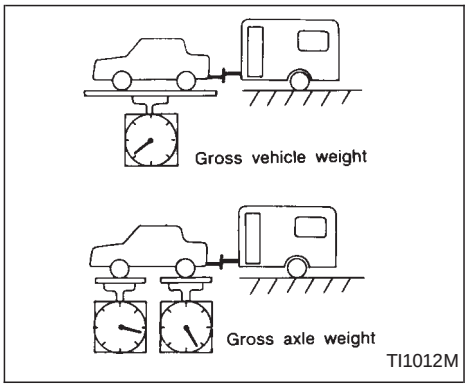

Tongue load:

Keep the tongue load between 9 and 11% of the total trailer load. If the tongue load becomes excessive, rearrange cargo to allow for proper tongue load.

Maximum gross vehicle weight/maximum gross axle weight:

The gross vehicle weight of the towing vehicle must not exceed the gross vehicle weight rating (GVWR) shown on the F.M.V.S.S. certification label. The gross vehicle weight equals the combined weight of the unloaded vehicle, passengers, luggage,

hitch, trailer tongue load and any other optional equipment. In addition, front or rear gross axle weight must not exceed the gross axle weight rating (GAWR) shown on the F.M.V.S.S. certification label.

TOWING LOAD/SPECIFICATION CHART	
	UNIT: lb (kg)
MAXIMUM TOWING LOAD	1,000 (454)
MAXIMUM TONGUE LOAD	110 (49)

Trailer hitch

Choose a proper hitch for your vehicle and trailer. Make sure the trailer hitch is securely attached to the vehicle, to help avoid personal injury or property damage due to sway caused by crosswinds, rough road surfaces or passing trucks.

⚠ CAUTION

- **Do not use axle-mounted hitches.**
- **The hitch should not be attached to or affect the operation of the impact-absorbing bumper.**
- **Do not modify the vehicle exhaust system, brake system, etc. when the hitch is installed.**
- **To reduce the possibility of additional damage if your vehicle is struck from the rear, where practical remove the hitch when not in use. Remove receiver when not in use.**
- **After the hitch is removed, seal the bolt holes to prevent exhaust fumes, water or dust from entering the passenger compartment.**
- **Regularly check that all hitch mounting bolts are securely mounted.**

Tire pressures

- When towing a trailer, inflate the vehicle tires to the recommended cold tire pressure indicated on the tire placard (located on the inside of the center console lid).
- Trailer tire condition, size, load rating and proper inflation pressure should be in accordance with the trailer and tire manufacturer's specifications.

Safety chain

Always use a suitable chain between your vehicle and the trailer. The chain should be crossed and should be attached to the hitch, not to the vehicle bumper or axle. Be sure to leave enough slack in the chain to permit turning corners.

Trailer lights

Trailer lights should comply with federal and/ or local regulations. When wiring the vehicle for towing, connect the stop and tail light pickup into the vehicle electrical circuit.

Trailer brakes

If your trailer is equipped with a braking system, make sure it conforms to Federal and/or local regulations and that it is properly installed.

⚠ WARNING

Never connect a trailer brake system directly to the vehicle brake system.

Pre-towing tips

- Be certain your vehicle maintains a level position when a loaded and/or unloaded trailer is hitched. Do not drive the vehicle if

it has an abnormal nose-up or nose- down condition; check for improper tongue load, overload, worn suspension or other possible causes of either condition.

- Always secure items in the trailer to prevent load shifts while driving.
- Be certain your rear view mirrors conform to all federal, state or local regulations. If not, install any mirrors required for towing before driving the vehicle.

Trailer towing tips

In order to gain skill and an understanding of the vehicle's behavior, you should practice turning, stopping and backing up in an area which is free from traffic. Steering stability and braking performance will be somewhat different than under normal driving conditions.

- Always secure items in the trailer to prevent load shift while driving.
- Avoid abrupt starts, acceleration or stops.
- Avoid sharp turns or lane changes.
- Always drive your vehicle at a moderate speed.
- Always block the wheels on both vehicle and trailer when parking. Parking on a slope is not recommended; however, if you must do so, and if your vehicle is equipped with an automatic transmission, first block the wheels and apply the parking brake, and then move the shift lever into the P position. If you move the shift lever to the P position before blocking the wheels and applying the parking brake, transmission damage could occur.
- When going down a hill, shift into a lower gear and use the engine braking effect. When ascending a long grade, downshift the transmission to a lower gear and reduce speed to reduce chances of engine overloading and/or overheating.
- If the engine coolant rises to an extremely high temperature when the air conditioner system is on, turn off the air conditioner. Coolant heat can be additionally vented by opening the windows, switching the fan control to high and setting the temperature control to the HOT position.
- Trailer towing requires more fuel than normal circumstances.
- Avoid towing a trailer for the first 500 miles (800 km).
- Have your vehicle serviced more often than at intervals specified in the recommended Maintenance Schedule.
- When making a turn, your trailer wheels will be closer to the inside of the turn than your vehicle wheels. To compensate for this, make a larger than normal turning radius during the turn.
- Crosswinds and rough roads will adversely affect vehicle/trailer handling, possibly causing vehicle sway. When being passed by larger vehicles, be prepared for possible changes in crosswinds that could affect vehicle handling. If swaying does occur, firmly grip the steering wheel, steer straight ahead, and immediately (but gradually) reduce vehicle speed. This combination will help stabilize the vehicle. Never increase speed.
- Be careful when passing other vehicles. Passing while towing a trailer requires considerably more distance than normal passing. Remember the length of the trailer must also pass the other vehicle before you can safely change lanes.

- To maintain engine braking efficiency and electrical charging performance, do not use fifth gear (manual transmission) or overdrive (automatic transmission).
- Avoid holding the brake pedal down too long or too frequently. This could cause the brakes to overheat, resulting in reduced braking efficiency.

When towing a trailer, change the transmission fluid more frequently.

See the Maintenance Schedule.

UNIFORM TIRE QUALITY GRADING

DOT (Department of Transportation) Quality Grades: All passenger car tires must conform to federal safety requirements in addition to these grades.

Treadwear

Treadwear grade is a comparative rating based on tire wear rate when tested under controlled conditions on specified government test courses. For example, a tire graded 150 would wear one and a half (1-1/2) times as well on the government course as a tire graded 100. However, relative tire performance depends on actual driving conditions, and may vary significantly from the norm due to variations in driving habits, service practices and differences in road characteristics and climate.

Traction A, B and C

Traction grades are A (the highest), B and C. They represent a tire's ability to stop on wet pavement as measured under controlled conditions, on specified government test surfaces of asphalt and concrete. A tire marked with a C may have poor traction performance.

⚠ WARNING

The traction grade assigned to your vehicle tires is based on straight line braking traction tests and does not include cornering (turning) traction.

Temperature A, B and C

Temperature grades are A (the highest), B, and C. They represent a tire's resistance to heat build-up, and its ability to dissipate heat when tested under controlled conditions on a specified indoor laboratory test wheel. Sustained high temperature can cause tire material to degenerate, reducing tire life. Excessive temperatures can lead to sudden tire failure. Grade C corresponds to a performance level which all passenger car tires must meet under the Federal Motor Vehicle Safety Standard No. 109. Grades A and B represent higher levels of performance on laboratory test wheels than the minimum required by law.

⚠ WARNING

The temperature grade for this tire is established for a tire that is properly

inflated and not overloaded. Excessive speed, underinflation, or excessive loading, either separately or in combination, can cause heat buildup and possible tire failure problems.

EMISSION CONTROL SYSTEM WARRANTY

Your NISSAN vehicle is covered by the following emission warranties:

For USA

1) Emission Defects Warranty

2) Emissions Performance Warranty

For Canada

Emission Control System Warranty

Details of these warranties may be found with other vehicle warranties in your warranty information booklet that comes with your NISSAN vehicle. If you did not receive a warranty booklet, or it has become lost, you may obtain a replacement by writing to:

- Nissan Motor Corporation, USA
  Consumer Affairs Department
  P.O. Box 191
  Gardena, CA 90248-0191
- Nissan Canada Inc.
  P.O. Box 1709,
  Station ‘‘B’’
  Mississauga, Ontario,
  L4Y 4H6

REPORTING SAFETY DEFECTS (USA)

If you believe that your vehicle has a defect which could cause a crash or could cause injury or death, you should immediately inform the National Highway Traffic Safety Administration (NHTSA) in addition to notifying NISSAN.

If NHTSA receives similar complaints, it may open an investigation, and if it finds that a safety defect exists in a group of vehicles, it may order a recall and remedy campaign. However, NHTSA cannot become involved in individual problems between you, your dealer, or NISSAN.

To contact NHTSA, you may either call the Auto Safety Hotline toll-free at 1-800-424-9393 (or 366-0123 in Washington, D.C. area) or write to: NHTSA, U.S. Department of Transportation, Washington, D.C. 20590. You can also obtain other information about motor vehicle safety from the Hotline.

You may notify NISSAN by contacting our Consumer Affairs Department, toll-free, at 1-800-NISSAN-1.

In Hawaii call (808) 836-0888.

READINESS FOR INSPECTION/MAINTENANCE (I/M) TEST

Due to legal requirements in some states and Canadian Provinces, your vehicle may be required to be in what is called the ‘‘ready condition’’ for an Inspection/Maintenance (I/M) test of the emission control system.

The vehicle is set to the ‘‘ready condition’’ when it is driven through certain driving patterns. Usually, the ready condition can be obtained by ordinary usage of the vehicle.

If a powertrain system component is repaired or the battery is disconnected, the vehicle may be reset to a ‘‘not ready’’ condition. Before taking the I/M test, drive the vehicle through the following pattern to set the vehicle to the ready condition. If you cannot or do not want to perform the driving pattern, a NISSAN dealer can conduct it for you.

WARNING

Always drive the vehicle in a safe manner according to traffic conditions and obey all traffic laws.

1. Start the engine when the engine coolant temperature gauge needle points to C. Allow the engine to idle until the gauge needle points between the C and H (normal operating temperature).
2. Accelerate the vehicle to 55 mph (88 km/h), then quickly release the accelerator pedal completely and keep it released for at least 6 seconds.
3. Quickly depress the accelerator pedal for a moment, then drive the vehicle at a speed of 53 to 60 mph (86 to 96 km/h) for at least 5 minutes.
4. Stop the vehicle and turn the engine off.
5. Repeat steps 1 through 4 at least one more time.

If step 1, 2 or 3 is interrupted, repeat the preceding step. Any safe driving mode is acceptable between steps. Do not stop the engine until step 3 is completed.

Genuine Nissan Service Manuals

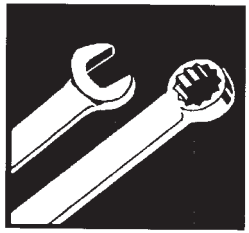

GET THE INSIDE STORY

A Genuine Nissan Service Manual is the best source of service and repair information for your vehicle. Filled with wiring diagrams, illustrations and step-by-step diagnostic and adjustment procedures, this manual is the same one used by the factory trained technicians working at your Nissan dealership. Also available are Genuine NISSAN Owner's Manuals.

For current pricing and availability of a Genuine NISSAN Service Manual or a Genuine NISSAN Owner's Manual, contact:

In the USA:

See your NISSAN dealer or contact:

Dyment Distribution Services
20770 Westwood Dr.
Strongsville OH 44136

In a hurry? Call 1-800-247-5321 and charge your purchase to Visa/Master Card.

In Canada:

To purchase a copy of a Genuine NISSAN Service Manual or Owner's Manual please contact your nearest NISSAN Dealer. For the phone number and location of a NISSAN Dealer in your area call the Nissan Satisfaction Center at 1-800-387-0122 and a bilingual NISSAN representative will assist you.

Also available are Genuine NISSAN Service and Owner's Manuals for older Nissan models.

10 Index

A

Adjustment after headlamp assembly replacement 7-24
Air bag (See supplemental restraint system)
Air bag warning light 1-6, 2-18
Air cleaner housing filter 7-16
Air conditioner
  Air conditioner (Automatic) 3-8
  Air conditioner (Manual) 3-2
Air conditioner-servicing 3-10
Air conditioner specification label 9-12
Air conditioner system refrigerant and lubrication recommendations 9-7
Alarm system (See Theft warning system)
Anchor point locations 2-31
Antenna
  Manual 3-23
  Power 3-22
Anti-lock brake system (ABS) 4-17
Anti-lock brake warning light 1-7
Ash tray (See cigarette lighter (accessory) and ash tray)
Audio system
  AM-FM radio with cassette player 3-12
  AM-FM radio with cassette player and compact disc player 3-17
Automatic
  Automatic air conditioner operation 3-8
  Automatic power window switch 1-17
  Automatic transmission fluid 7-9
  Driving with automatic transmission 4-6

B

Battery 7-13
Battery replacement 2-6
Before starting the engine 4-5
Belts
  Inspection 7-14
  Size 9-8
Brake
  Anti-lock brake system (ABS) 4-17
  Brake and clutch fluid 7-11
  Brake booster 7-19
  Brake light (See stop light)
  Brake pedal 7-18
  Brake system 4-16
  Brake warning light 1-6
  Brake wear indicators 1-7, 7-19
  Parking brake check 7-18
  Parking brake operation 4-11
Break-in schedule 4-14
Bulb check/instrument panel 1-5
Bulb replacement 7-25

C

Capacities and recommended fuel/lubricants 9-2
Cargo (See vehicle loading information)
Cassette player (See audio system)
CB radio or car phone 3-23
Check engine indicator light (See Malfunction indicator light)
Child restraints for infants and small children 2-30
Child safety rear door lock 2-4
Cigarette lighter (accessory) and ash tray 1-15
Cleaning exterior and interior 6-2
Clock — instrument panel 1-20
Clock-radio 3-11
Clutch pedal 7-20
Cold weather driving 4-18
Compact disc (CD) player operation 3-21
Controls
  Audio controls 3-12, 3-17
  Heater and air conditioner (automatic) 3-8
  Heater and air conditioner (manual) 3-2
Coolant
  Capacities and recommended fuel/lubricants 9-2
  Changing engine coolant 7-5

Checking engine coolant level 7-4
Engine coolant temperature gauge 1-4
Cornering light 1-13
Corrosion protection 6-5
Cruise control..... 4-12
Cup holder 1-16

D

Daytime running light system
(for Canada)..... 1-13
Defogger switch
Rear window defogger switch 1-10
Dimensions and weights..... 9-9
Door locks..... 2-2
Door open warning light 1-6
Drive belts..... 7-14
Driving
Cold weather driving..... 4-18
Driving with automatic transmission..... 4-6
Driving with manual transmission..... 4-9
Precautions when starting and driving ... 4-2

E

Economy - fuel..... 4-14
Emission control information label..... 9-12
Emission control system warranty..... 9-19
Engine
Before starting the engine 4-5
Capacities and recommended
fuel/lubricants..... 9-2
Changing engine coolant..... 7-5
Changing engine oil..... 7-8
Changing engine oil filter..... 7-9
Checking engine coolant level 7-4
Checking engine oil level 7-7
Engine compartment check locations 7-3
Engine coolant temperature gauge 1-4
Engine cooling system 7-4
Engine oil..... 7-7
Engine oil and oil filter
recommendation 9-5
Engine oil pressure warning light 1-5
Engine oil viscosity 9-6
Engine serial number 9-11
Engine specifications..... 9-8
Starting the engine 4-10
Exhaust gas (carbon monoxide)..... 4-2
Explanation of maintenance items 8-10

F

Flashers (See hazard warning flasher switch)
Flat tire..... 5-2
Floor mat positioning aid 6-5
Fluid (checking)
Automatic transmission fluid (ATF) 7-9
Brake and clutch fluid..... 7-11
Engine coolant..... 7-4
Engine oil..... 7-7
Power steering fluid..... 7-11
Window washer fluid 7-12
F.M.V.S.S. certification label 9-11
Front fog light switch 1-14
Front seats..... 2-12
Fuel
Capacities and recommended
fuel/lubricants..... 9-2
Fuel economy 4-14
Fuel filler cap 2-11
Fuel filler lid lock operation 2-10
Fuel octane rating..... 9-3
Fuel recommendation..... 9-3
Fuses 7-20
Fusible links 7-21

G

Gas station information..... 10-6
Gauge
Engine coolant temperature gauge 1-4
Fuel gauge..... 1-4
Odometer..... 1-3
Speedometer 1-3
Tachometer..... 1-3
Trip odometer 1-3
Gear selection (See shifting)
General maintenance 8-2
Glove box..... 2-8

H

Hazard warning flasher switch 1-14

Headlight and turn signal switch 1-12
Headlights 7-22
Head restraints 2-14
Heater and air conditioner
Heater and air conditioner controls (automatic) 3-8
Heater and air conditioner controls (manual) 3-2
Hood release 2-8

I

Ignition switch 4-4
Indicator lights and chimes (See warning/ indicator lights and chimes)
Inside mirror 2-38
Instrument brightness control 1-14
Interior light 1-20

J

Jump starting 5-7

K

Key 2-2

L

Labels
Air conditioner specification label 9-12
Emission control information label 9-12
Engine serial number 9-11
F.M.V.S.S.certification label 9-11
Vehicle identification number plate 9-10
Warning labels (for SRS) 2-21
License plate
Installing front license plate 9-13
Light
Brake light (See stop light)
Bulb check/instrument panel 1-5
Bulb replacement 7-25
Cornering light 1-13
Front fog light switch 1-14
Headlight and turn signal switch 1-12
Headlights 7-22
Interior light 1-20
Light bulbs 7-22
Spotlight 1-21
Supplemental air bag warning light 1-6, 2-18
Trunk light 1-21
Warning/indicator lights and chimes 1-5
Lock
Child safety rear door lock 2-4
Door locks 2-2
Fuel filler lid lock operation 2-7
Glove box 2-5
Power door lock 2-3
Trunk lid lock operation 2-6
Luggage (See vehicle loading information)

M

Maintenance
General maintenance 8-2
Inside the vehicle 8-3
Outside the vehicle 8-2
Periodic maintenance schedules 8-5
Seat belt maintenance 2-30
Under the hood and vehicle 8-4
Malfunction indicator light 1-8
Manual antenna 3-23
Manual transmission
Driving with manual transmission 4-9
Manual transmission fluid 8-9
Manual windows 1-15
Map light (See spotlight)
Meters and gauges 1-2
Mirror
Inside mirror 2-38
Outside mirror remote control 2-37
Outside mirrors 2-37
Vanity mirror 2-38
Multi-remote control system 2-4

O

Octane rating (See fuel)
Odometer 1-3

Oil
Capacities and recommended fuel/lubricants 9-2
Changing engine oil 7-8
Changing engine oil filter 7-9
Checking engine oil level 7-7
Engine oil 7-7
Engine oil and oil filter recommendation 9-5
Opener lever for trunk lid 2-10
Outside mirror remote control 2-37
Outside mirrors 2-37
Overdrive switch 4-8
Overheat
If your vehicle overheats 5-9
Owner's manuals/service manual order form 9-21

P

Parking
Parking brake check 7-18
Parking brake operation 4-11
Parking/parking on hills 4-15
Periodic maintenance schedules 8-5
Power
Power antenna 3-22
Power door lock 2-3
Power steering fluid 7-11
Power steering system 4-16
Power windows 1-17
Rear power windows 1-18
Precautions
Maintenance precautions 7-2
Precautions on seat belt usage 2-23
Precautions when starting and driving ... 4-2
Push starting 5-9

Q

Quick reference (See gas station information)

R

Radio
AM-FM radio with cassette player 3-12
AM-FM radio with cassette player and compact disc player 3-17
CB radio or car phone 3-23
Readiness for inspection maintenance (I/M) test 9-20
Rear seat 2-15
Rear window defogger switch 1-11
Refrigerant recommendation 9-7
Registering your vehicle in another country 9-10
Reporting safety defects (USA) 9-19

S

Safety
Child safety rear door lock 2-4
Reporting safety defects (USA) 9-19
Seat adjustment 2-12
Seat belt
Precautions on seat belt usage 2-20
Seat belt extenders 2-30
Seat belt maintenance 2-30
Seat belts 2-23
Seat belt warning light 1-6
2-point type without retractor 2-28
3-point type with retractor 2-26
Seats
Front seats 2-12
Rear seat 2-15
Service manual/owner's manual order form 9-21
Shifting
Automatic transmission 4-7
Manual transmission 4-9
Spark plug replacement 7-15
Speedometer 1-3
Spotlight 1-21
SRS warning labels 2-18
Starting
Before starting the engine 4-5
Jump starting 5-7
Precautions when starting and driving ... 4-2
Push starting 5-9
Starting the engine 4-10
Steering
Power steering fluid 7-11
Tilting steering wheel 2-37
Stop light 7-28
Sunroof 1-18

Supplemental air bag system 2-19
Supplemental air bag warning light 2-21
Supplemental restraint system
(supplemental air bag system) 2-16
Switch
Automatic power window switch 1-16
Front fog light switch 1-13
Hazard warning flasher switch 1-13
Headlight and turn signal switch 1-11
Ignition switch 4-4
Overdrive switch 4-8
Rear window defogger switch 1-10
Windshield wiper and washer switch ... 1-10

T

Tachometer 1-3
Theft warning light 1-7
Theft warning system 1-9
Three way catalyst 4-2
Tilting steering wheel 2-37
Timing chain 9-8
Tire
Flat tire 5-2
Spare tire 5-2, 7-33
Tire chains 7-30
Tire placard 9-12
Tire pressure 7-29
Tire rotation 7-31
Uniform tire quality grading 9-18
Wheels and tires 7-29
Wheel/tire size 9-9
Towing
Towing load/specification chart 9-16
Tow truck towing 5-10
Trailer towing 9-15
Transmission
Automatic transmission fluid (ATF) 7-9
Driving with automatic transmission 4-6
Driving with manual transmission 4-9
Manual transmission fluid 8-9
Travel (see registering your vehicle
in a another country)
Trip odometer 1-3
Trunk lid lock operation 2-9
Trunk light 1-21
Turn signal switch (See headlight and
turn signal switch)

U

Uniform tire quality grading 9-18

V

Vanity mirror 2-38
Vehicle dimensions and weights 9-9
Vehicle identification 9-10
Vehicle identification number plate 9-10
Vehicle loading information 9-14
Vehicle recovery 5-12
Ventilators 3-2

W

Warning
Hazard warning flasher switch 1-14
Supplemental air bag warning light 2-21
Theft warning 1-9
Warning/indicator lights and chimes 1-5
Warning labels (for SRS) 2-21
Weights (See dimensions and weights)
Wheels and tires 7-29
Wheel/tire size 9-9
Windows
Locking passenger windows 1-17
Power rear windows 1-18
Power windows 1-17
Window washer fluid 7-12
Wiper
Windshield wiper and washer switch ... 1-10
Wiper blades 7-17

Recommended fuel:

Unleaded gasoline, at least 87 AKI number (RON 91).

For further details such as gasohol, see ‘‘Fuel recommendation’’ in the ‘‘Technical and consumer information’’ section.

Recommended engine oil:

- API SG or SH and Energy Conserving II
- API Certification Mark
- SAE 5W-30 viscosity oil is preferred for all ambient temperatures.

See ‘‘Engine oil and oil filter recommendation’’ in the ‘‘Technical and consumer information’’ section.

Tire cold pressure:

See tire placard affixed to the center console lid.

Recommended new vehicle break-in procedure:
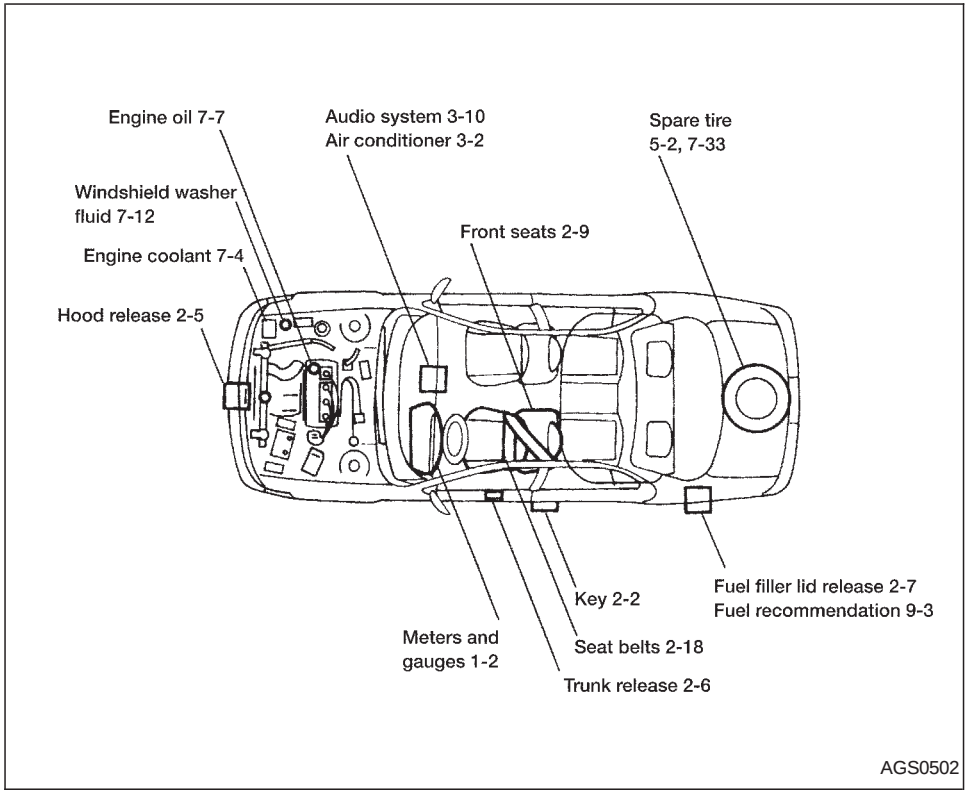
During the first 1,000 miles (1,600 km) of vehicle use, follow the recommendations outlined in the “BREAK-IN SCHEDULE Information found in the “Starting and Driving” section of this Owner’s Manual. Follow these recommendations for the future reliability and economy of your new vehicle. Failure to follow these recommendations may result in vehicle damage or shortened engine life.