RIVIAN

UNITED STATES

JULY 18, 2023

R1T

Owner's Guide

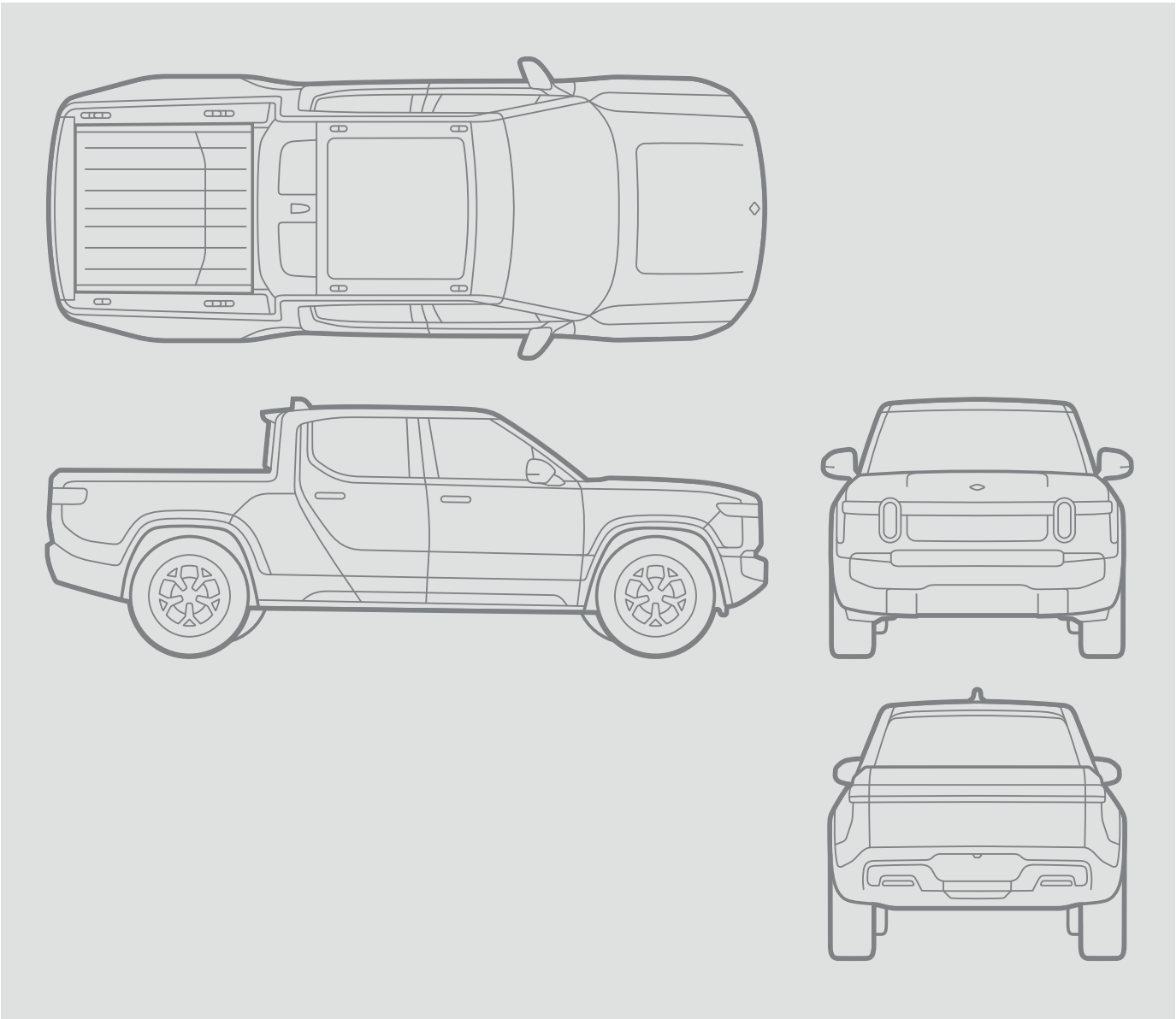

SOFTWARE VERSION 2023.26.x

© 2021-2023 Rivian Automotive, LLC. All rights reserved.

All information in this document and all Rivian software is subject to copyright and other intellectual property rights of Rivian Automotive, LLC, its affiliates, or its licensors. This material may not be modified, reproduced, or copied, in whole or in part, without the prior written permission of Rivian Automotive, LLC, its affiliates, or its licensors. Unless indicated otherwise, all trademarks are owned and registered by Rivian Automotive, LLC, its affiliates, or its licensors in the United States and/or other countries. Please visit https://www.rivian.com/legal/brand for Rivian's trademarks and service marks.

Software embedded or accessed by the vehicle may utilize open source software. Please visit https://www.rivian.com/legal/open-source for more information.

Some features may not be available depending on your vehicle configuration or region.

The images provided in this document are for illustrative purposes only. Depending on the product details and market region, the information in this document may appear slightly different from your product.

Contents

Introduction **9**
Symbols Used in Owner's Guide 9
High-Voltage Dangers 10
Exterior 11
Front and Rear 11
Truck Bed 12
Driver's Side 13
Interior 14
Front 14
Rear 15
Access, Safety, and Climate **16**
Opening and Closing 16
Locks and Keys 16
Theft Protection 23
Door Handles 25
Roomy Entry and Exit 25
Kneel Vehicle 27
Child Locks 27
Garages 29
Seating 31
Airbags 31
Seats 35
Seat Belts 37
Head Restraints 40
Child Seats 42
Windows and Mirrors 48
Windows 48
Side Mirrors 49
Rearview Mirror 51
Toll Devices 52
Lights 52
Exterior Lights 52
Cabin Lights 62
Rivian Torch 63
Show and Tell 66
Climate 67

Climate Control ... 67
Seat Climate Control ... 73
Heated Steering Wheel ... 74
Window Defrost ... 75
Sun Visors ... 76
Pet Comfort ... 76
Audio and Phone ... 78
Phone ... 78
Bluetooth Pairing ... 78
Cellular Connectivity ... 78
Wi-Fi Connectivity ... 81
Phone Call ... 82
Smartphone Integration ... 84
Rivian Account ... 85
Rivian Mobile App ... 85
Software Updates ... 87
Audio ... 88
Sound System ... 88
Media Options ... 89
Alexa ... 91
Overview and Setup ... 91
Disable Wake Word ... 92
Things You Can Ask Alexa ... 93
Device Charging ... 95
Charge Ports (USB-C) ... 95
Wireless Charger ... 95
Driving ... 97
Basic Vehicle Operations ... 97
Startup and Sleep ... 97
Brakes ... 97
Select a Gear ... 98
Driving Controls ... 100
Status Indicators ... 100
Steering Wheel Controls ... 105
Display Screens ... 108
Display Settings ... 110
Power Gauge ... 110
About Your Vehicle ... 111
Wipers ... 112
Vehicle Hold ... 114

Emergency Deceleration ... 115
Electronic Stability Control ... 115
Navigation ... 117
Drive Modes ... 118
On-Road Drive Modes ... 118
Off-Road Drive Modes ... 119
Stability ... 120
Ride ... 121
Brake Regen ... 121
Hold ... 121
Ride Height ... 122
Driver+ ... 124
Driver+ Sensors and Cameras ... 124
Adaptive Cruise Control and Highway Assist ... 125
Automatic High Beams ... 132
Rear Cross-Traffic Warning ... 133
Park Assist ... 135
Blind Spot Warning ... 139
Collision Mitigation ... 141
Lane Safety ... 144
Off-Road Driving ... 147
Air Down Tires ... 147
Drive Across Water ... 148
Charging and Range ... 149
Charge the Vehicle ... 149
Find a Charger ... 149
Start a Charge Session ... 150
Set the Charge Amperage ... 151
Set the Charge Limit ... 151
Check Charge Status ... 151
Check Time to Charge ... 152
Stop a Charge Session ... 152
Set a Charge Schedule ... 153
Range ... 153
Range Estimates ... 153
Effects on Range ... 154
Low Battery ... 155
Battery Life ... 156
Portable Charger ... 156
Important Safety Instructions ... 156

Parts Diagram 159
Attach or Remove an Adapter 160
Charging 160
User Maintenance Instructions 161
Moving and Storage Instructions 162
Installation Instructions 163
Troubleshoot Your Portable Charger 163
Specifications 164
Storage and Security 165
Interior Storage 165
Center Console 165
Rear Seat Armrest 166
Door Pockets 166
Seat Back Pockets 166
Under-Seat Storage 167
Exterior Storage 168
Protect Your Gear 168
Front Trunk 168
Spare Tire Compartment 170
Cargo Crossbars 172
Tailgate 175
Truck Bed 177
Accessory Ports and Cargo Tie-Downs 177
Powered Tonneau Cover 178
Manual Tonneau Cover 180
Gear Tunnel Storage 185
Security 190
Gear Guard Security System 190
Gear Guard Video 193
Drive Cam 197
Incidents 200
Motion Cam 201
Gear Guard Alarm 201
Camping and Towing 204
Camping 204
Camping Controls 204
Rivian Camp Speaker 208
Air Compressor 217
Field Kit 222
First-Aid Kit 222

Power Outlets 223
Towing a Trailer 226
Load Capacity 226
Trailer Hitch 226
Towing Mode 227
Trailer Brakes 228
Manual Cruise Control 229
Service and Maintenance 231
Tires 231
Tires and Wheels 231
Tire Pressure Monitoring System 238
Seal a Flat Tire 239
Change a Tire 241
Lift the Vehicle with a Non-Rivian Jack 252
21 inch Road Wheel Center Cap 256
Clean the 21 inch Road Wheel 258
Routine Maintenance 259
Wiper Blades 259
Windshield Washer Fluid 260
Cleaning 261
Interior Cleaning 261
All-Weather Floor Mats 262
Exterior Cleaning 263
Remove Snow and Ice from the Headlights 268
Troubleshooting and Help 269
Troubleshooting 269
Restart the Software 269
Restart the Vehicle 270
Jump-Start the 12 V Batteries 271
Manually Open the Hood 275
Manually Release the Charge Plug 276
Calibrate the Driver's Seat or Steering Wheel 277
Reset the Windows 278
Overheating 278
System Failures 278
Reporting Safety Defects in the United States 278
Roadside Assistance 279
Transport the Vehicle 279
Vehicle Shipping Mode 285
Emergency SOS 286

Legal and Reference **287**
Legal 287
Certification Conformity 287
State-Specific Disclaimers 290
Event Data Recorder 291
Data and Privacy 291
Quality Control 292
Customer Service **293**

Introduction

This guide covers R1T vehicles sold in the United States for software release 2023.26.

SYMBOLS USED IN OWNER'S GUIDE

The following are the meanings of symbols used in the Owner's Guide.

DANGER

Risk of electrocution or electric shock

DANGER

Risk of major injury such as

- fire
- chemical or poison
- crushing
- maiming
- death

WARNING

Risk of minor injury

CAUTION

Risk of

- damage to vehicle or property
- data disruption
- voiding warranty

IMPORTANT

Instructions to successfully complete a task

NOTE

Useful information

HIGH-VOLTAGE DANGERS

DANGER

You could be electrocuted, seriously injured, or die if you attempt to perform your own service or repair on high-voltage systems.

Rivian vehicles contain lithium-ion battery packs, extremely high-voltage cables (400–450 V), electrical outlet cables (120 V), traditional car batteries (12 V), compressed gas, and triggering devices.

High-voltage components are identified by labels. Don't remove, open, take apart, or modify these components. High-voltage cable or wiring has an orange covering. Don't probe, tamper with, cut, or modify high-voltage cables or wiring. Always assume the vehicle is energized.

Rivian strongly recommends that you have all service and repair work done at a Rivian-authorized service center, mobile service vehicle, or repair facility.

Service and repair of high-voltage systems should only be performed by a trained technician with the proper knowledge and tools. It is dangerous to perform your own service or repair work on high-voltage systems. Exposure to high voltage can cause electrocution, severe injury, or death.

EXTERIOR

Front and Rear

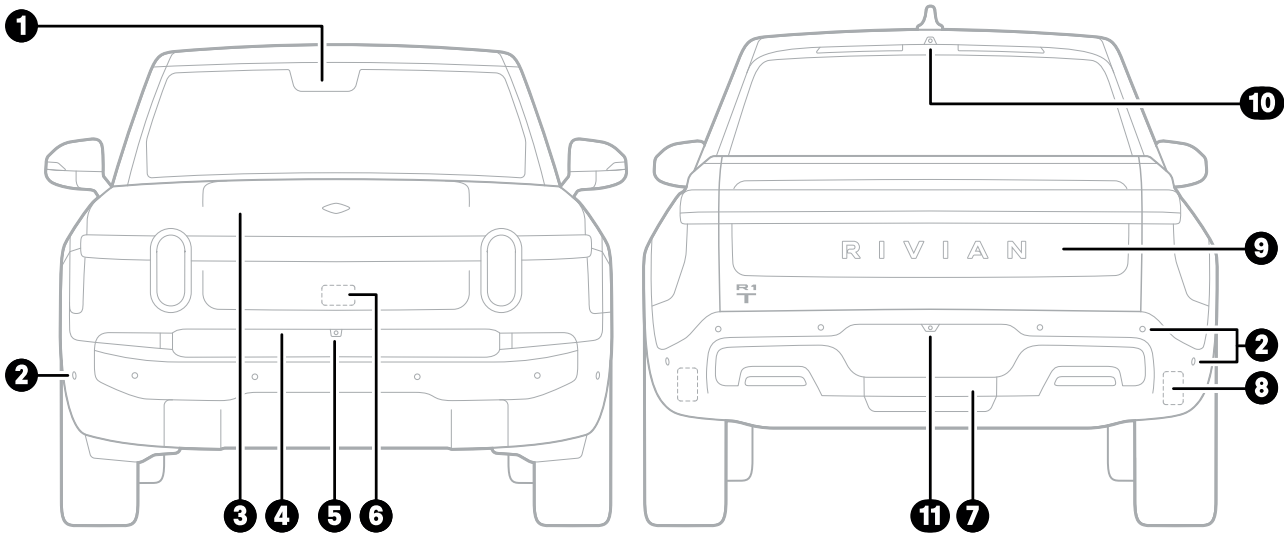

Item	Description
1	Front camera
2	Ultrasonic sensors
3	Front trunk
4	Front trunk button (hidden)
5	Front surround view camera
6	Front radar sensor
7	Towing receiver hitch
8	Corner radars
9	Tailgate
10	Bed camera
11	Rear surround view camera

NOTE

All vehicles ship with license plate brackets installed on the rear, and installed on the front by request. If your vehicle does not have a front license plate bracket installed, and you would like one, please contact Rivian.

CAUTION

Installation of a front license plate bracket requires the use of special tools and fasteners. We do not recommend installing the bracket yourself as improper installation can cause damage to the vehicle.

Truck Bed

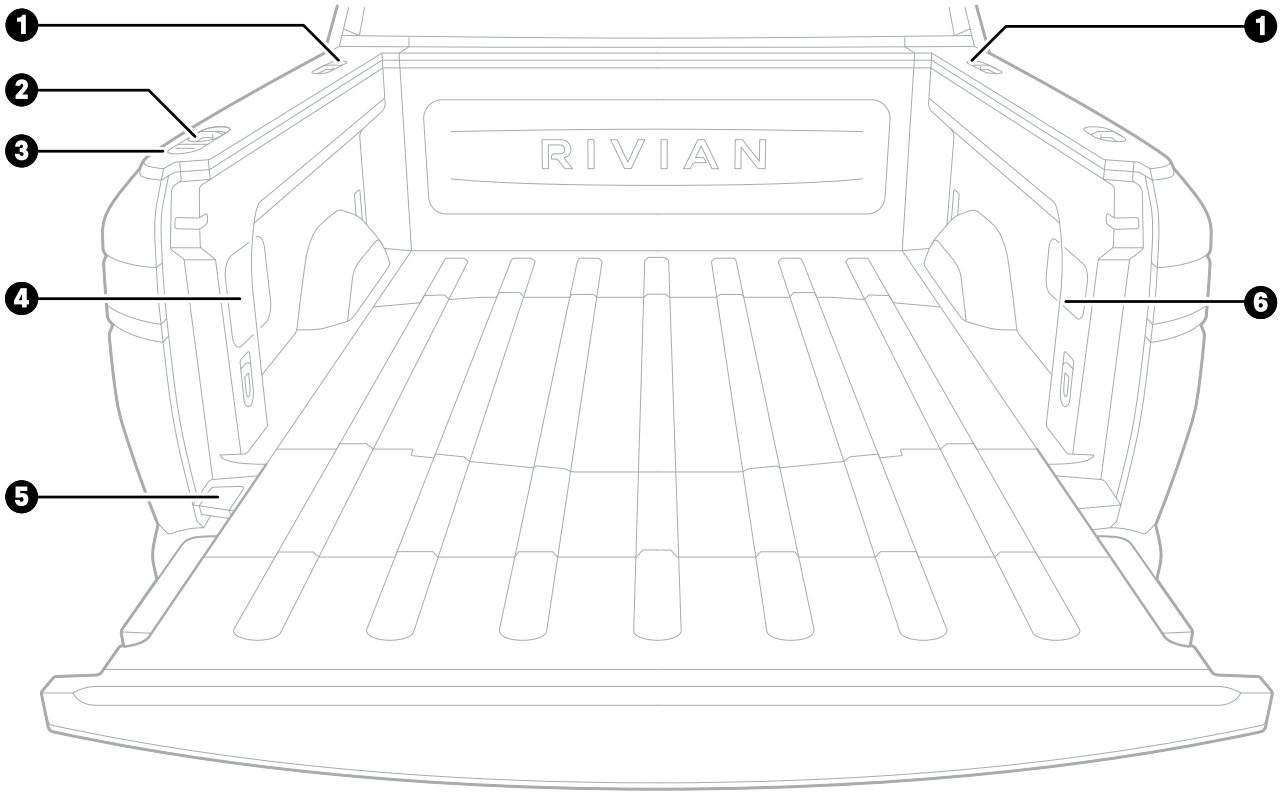

Item	Description
1	Gear tunnel release buttons
2	Tonneau cover button (if equipped)
3	Tailgate release button
4	Air compressor
5	Spare tire compartment lever
6	Power outlets

Driver's Side

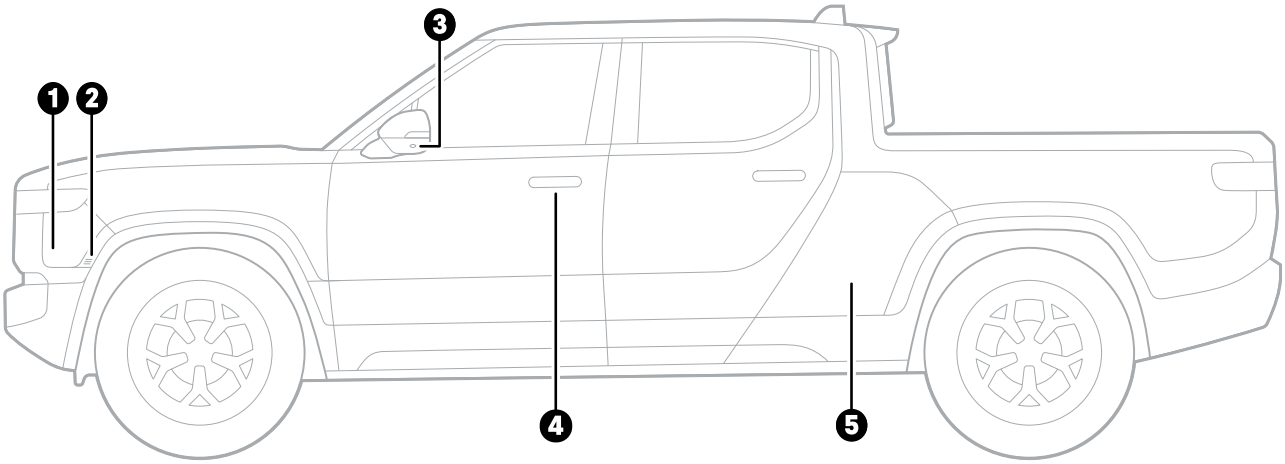

Item	Description
1	Charge port door
2	Charge port door sensor
3	Surround view camera
4	Door handle / key card reader
5	Gear Tunnel

INTERIOR

Front

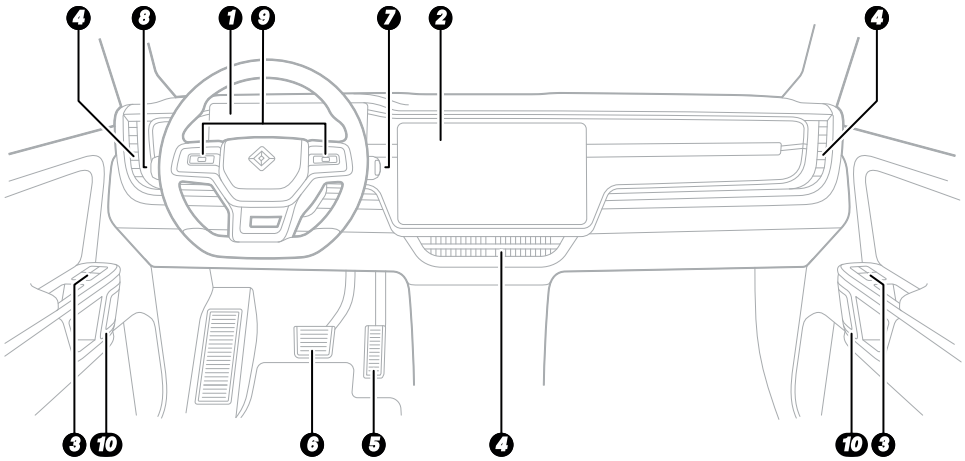

Item	Description
1	Driver display
2	Center display
3	Window controls
4	Vents
5	Accelerator pedal
6	Brake pedal
7	Drive stalk
8	Lights stalk
9	Thumb controls
10	Interior door handles

Rear

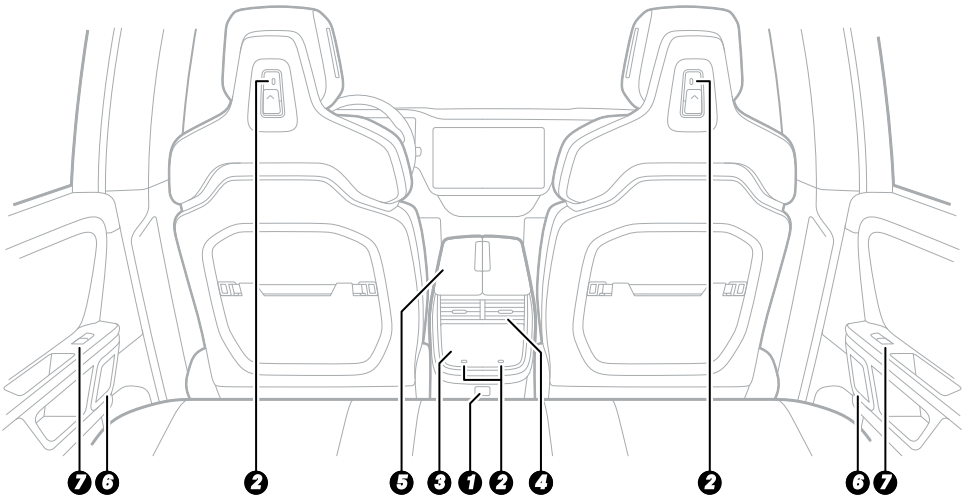

Item	Description
1	Power outlet
2	USB-C outlets
3	Rear display
4	Rear vents
5	Center console
6	Door handles
7	Window controls

Access, Safety, and Climate

OPENING AND CLOSING

Locks and Keys

Use any of the following keys to lock or unlock the vehicle:

- Key fob
- Key card or band
- Phone key

NOTES

- In the **Settings** ⚙ › **Drivers and Keys** menu, indicators (black dots) identify the key that unlocked the vehicle and the owner of that key.
- The doors automatically lock when you start driving.

KEY FOB

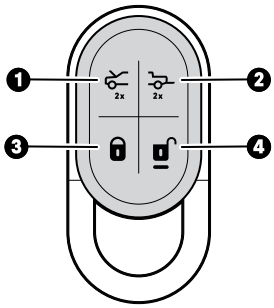

Number	Description	Button Sequence		Function
1	Front Trunk	• •	Double press	Open or close the front trunk.
		• • •	Press then double press	Single press to pause the front trunk when in motion. Double press to change direction.
2	Tailgate	• •	Double press	Open the tailgate.
3	Lock	•	Press	Lock all doors. Configure this option from the center display.
		• •	Double press	Lock all doors.
		▬	Hold	Activate panic alarm. Press **Lock** or **Unlock** on the key fob to stop the alarm.
		• ▬	Press then press and hold	Lock all doors and roll up all windows.
4	Unlock	•	Press	Unlock driver's door or all doors. Configure this option from the center display.
		• •	Double press	Unlock all doors.
		• ▬	Press then press and hold	Unlock all doors and roll down all windows.

NOTES

- If the vehicle is asleep, it may take up to 8 seconds to lock or unlock the vehicle with the key fob.
- Updating your key fob software improves its functionality. The vehicle notifies you when a software update is available for your key fob.

KEY CARD OR BAND

To use the key card or band to lock or unlock the vehicle, touch it to the reader on the driver's door handle and wait a few seconds.

> **NOTES**
>
> - The key card or band only works on the driver door. Passenger doors do not have key card or band readers.
> - If the vehicle is asleep, touch the key card or band to the driver's door handle for up to 8 seconds.

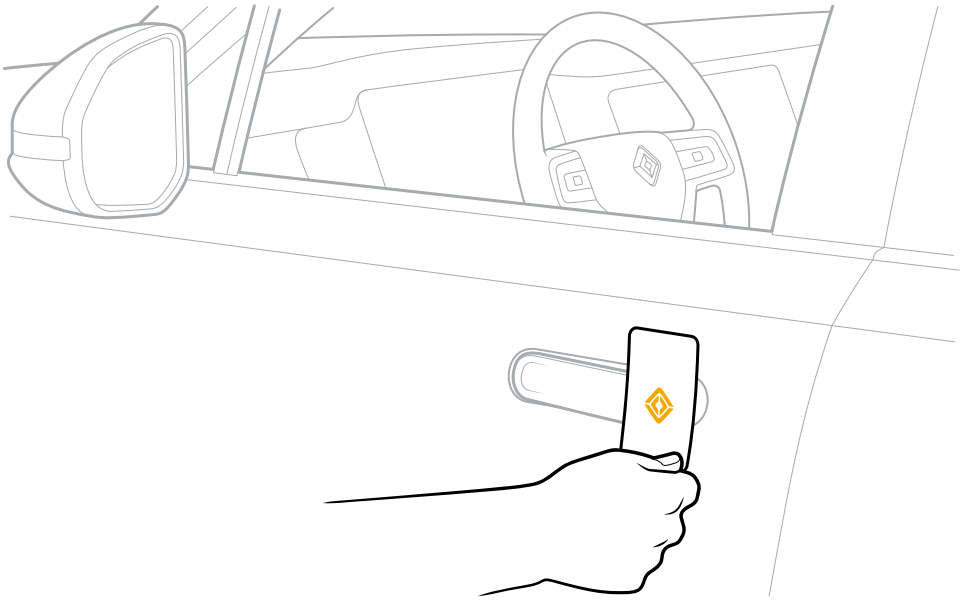

PHONE KEY

To use your phone to lock or unlock the vehicle, select **Lock** or **Unlock** in the Rivian mobile app.

> **NOTE**
>
> You can pair up to two *Bluetooth*® Low Energy smartphones with the vehicle.

CENTER DISPLAY

You can lock or unlock the vehicle from the center display.

Lock or Unlock from the Status Bar

The lock and unlock icon in the upper left corner of the center display shows the lock status.

Icon	Lock Status
Lock	All doors are locked. Press the lock icon to unlock all doors.
Unlock	Press the unlock icon to lock all doors. If at least one door is unlocked, the unlock icon appears in the status bar. • Press the unlock icon to unlock all doors. • Press the unlock icon again to lock all doors.

Lock or Unlock from the Access and Security Page

The Access and Security page shows a top view of the vehicle with a lock and an unlock icon.

- Press the lock icon to lock all doors.
- Press the unlock icon to unlock all doors.

DRIVE WITH THE KEY CARD OR BAND

To drive the vehicle without a key fob or phone key, start it within 60 seconds of unlocking the vehicle with the key card or band. If 60 seconds pass before you can start the vehicle, you must touch the key card or band to the sensor on the driver door's interior trim for a few seconds. The vehicle chimes to confirm. Once you hear the chimes, you can start the vehicle.

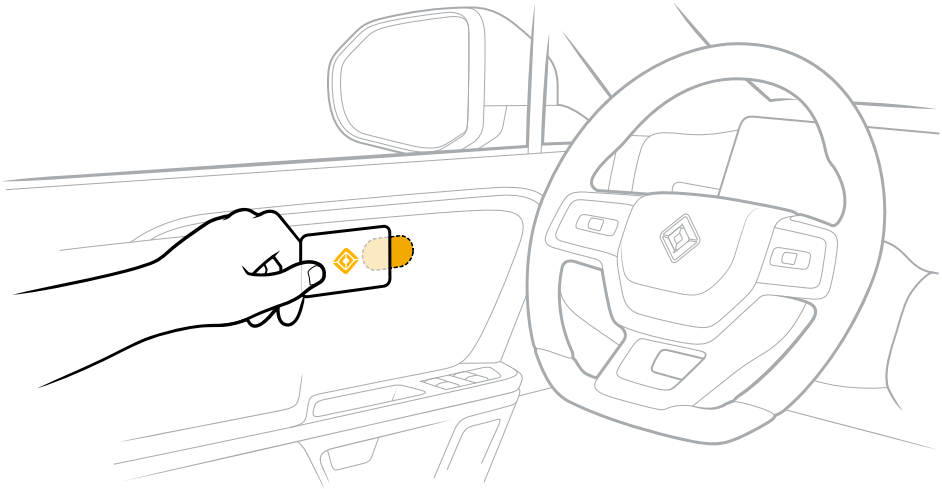

NOTE

The card reader is located on the interior driver door's trim and isn't marked.

ACTIVE AND PASSIVE LOCK AND UNLOCK

You can actively or passively lock or unlock the vehicle depending on the type of key and its setting.

- **Active (default):** Locks or unlocks the vehicle when you press a button on the key fob, use the Rivian mobile app, or hold the key card or band against the driver's door handle
- **Passive (called Proximity Locking):** Automatically locks or unlocks the vehicle when you are near it with the key fob or phone key

Go to **Settings** ⚙ › **Vehicle** › **Access** › **Proximity Locking** to manage proximity settings.

Key	Lock or Unlock Capability
Key fob	Active or passive
Phone key	Active or passive
Key card	Active
Key band	Active

Proximity Locking Off at Home

If you turn on proximity lock for your key fob or phone key, and it causes your vehicle to lock or unlock unexpectedly while you're at home, adjust the setting to turn proximity locking off at home. To do this:

1. From the center display, choose **Settings** ⚙ › **Vehicle** › **Access**.
2. Go to **Proximity Locking** and select the **Off At Home** button. To turn it back on, select the **Always On** button.

IMPORTANT

- If proximity locking is set to Off At Home, you must actively lock or unlock the vehicle with a key fob, key card, key band, or phone key when you're at home.
- Set your home address in the Navigation app.

REPLACE THE KEY FOB BATTERY

If your key fob battery charge is low, you'll see a "Low battery" or "Change battery" indicator under **Settings** ⚙ › **Drivers and Keys** › **Key fob** in the center display. Follow the steps below to replace the key fob battery.

Remove the Key Fob Cover

1. Hold the key fob so the Rivian logo faces you.
2. Pull up and turn the carabiner hook to expose the slot at the top of the key fob.

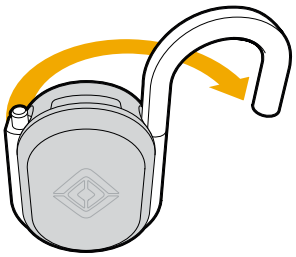

3. Insert a coin in the slot at the top of the fob.
4. Gently pry the cover off the key fob by pushing the coin away from you.

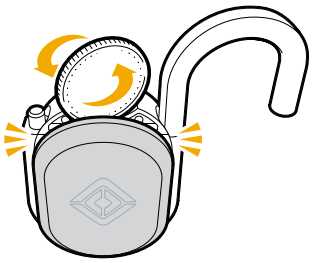

5. Carefully remove the cover to avoid damaging the tabs.

Remove and Replace the Battery

1. Remove the coin cell battery from the holder.
2. Insert a new CR2450 (or equivalent IEC60086-4 compliant) coin cell battery in the battery holder.

NOTES

- Recycle used coin cell batteries at a battery recycling center or dispose in accordance with local laws.
- Key fob environmental storage and operating conditions are -22 to +122 °F (-30 to +50 °C).
- The ISO7000-1641 operator's manual symbol is printed inside the key fob.

DANGER

- The key fob contains a coin cell battery.
- Batteries can present chemical burn hazards. If swallowed, batteries can cause severe internal burns within two hours, which can lead to death.
- Keep new and used batteries away from children.
- If a battery may have been swallowed or placed inside any part of the body, seek immediate medical attention.

Re-install the Key Fob Cover

1. Ensure the O-ring is installed in the key fob cover.

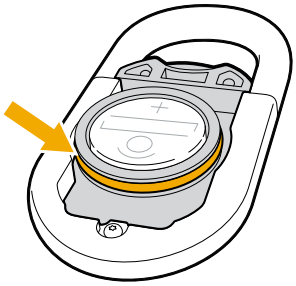

2. There are two tabs on the bottom of the cover. Install the two bottom tabs first and then snap the top tab into the key fob.
3. Press to seal the cover.

WARNING

If the key fob doesn't close securely, stop using the product and keep it away from children. Contact Rivian Service for a replacement.

Theft Protection

The vehicle is equipped with an immobilizer that helps prevent vehicle theft.

WARNING

Don't leave the vehicle unattended and unlocked with your key fob, key card, key band, or phone key inside.

The following table describes how the immobilizer works in various entry and exit scenarios.

PHONE KEY

Enter or Exit	Requirements	Immobilizer Status
Passive entry	• Phone key is authenticated. • Driver is seated in the driver's seat. • Vehicle is in Park.	The system turns off the immobilizer and the driver can operate the vehicle.
Passive exit	• Vehicle is in Park. • Driver opens the door and exits the vehicle. • Driver walks approximately 13 ft (4 m) away from the vehicle with the authenticated phone key.	The system enables the immobilizer. The vehicle can't be driven until the driver returns with a key.
Active exit	• Vehicle is in Park. • Driver opens the door and exits the vehicle with the authenticated phone key.	The system enables the immobilizer. The vehicle can't be driven until the driver returns with a key.

KEY CARD OR KEY BAND

Enter or Exit	Requirements	Immobilizer Status
Active entry	• Key card or key band is authenticated. • Driver is seated in the driver's seat. • Vehicle is in Park. • Driver holds the key card or key band on the interior card reader against the driver's door.	The system turns off the immobilizer and the driver can operate the vehicle.

Enter or Exit	Requirements	Immobilizer Status
Active exit	• Driver is carrying the authenticated key card or key band. • Vehicle is in Park. • Driver opens the door and exits the vehicle. • Driver holds the key card or key band against the exterior driver door handle to lock the doors.	The system enables the immobilizer. The vehicle can't be driven until the driver returns with a key.
System times out with the driver in the driver's seat	• Key card or key band is authenticated. • Immobilizer is enabled. • Driver is seated in the driver's seat. • Vehicle is in Park. • Driver doesn't place the key card or key band against the interior card reader.	The system keeps the immobilizer enabled. The vehicle can't be driven until the driver places the key card or key band against the interior card reader.
System times out after the driver leaves the vehicle	• Key card or key band is authenticated. • Immobilizer is enabled. • Driver is seated in the driver's seat. • Vehicle is in Park. • Driver doesn't place the key card or key band against the interior card reader. • Driver opens the door and exits the vehicle.	The system keeps the immobilizer enabled. The vehicle can't be driven until the driver places the key card or key band against the interior card reader.

Door Handles

EXTERIOR HANDLES

When you unlock the vehicle, the exterior door handles present. Pull the handle to open the door. Exterior handles retract and lock when you drive the vehicle.

> **NOTE**
>
> If the vehicle is in Car Wash mode, the exterior door handles don't present when unlocked. Push the front part of the handle and then pull the handle to open the door.

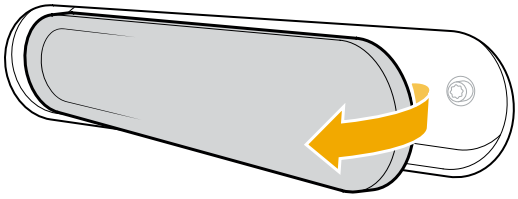

INTERIOR HANDLES

Pull the grab handle to close the door. Pull the interior door handle to open the door. If the door is locked, pull twice to unlock and open.

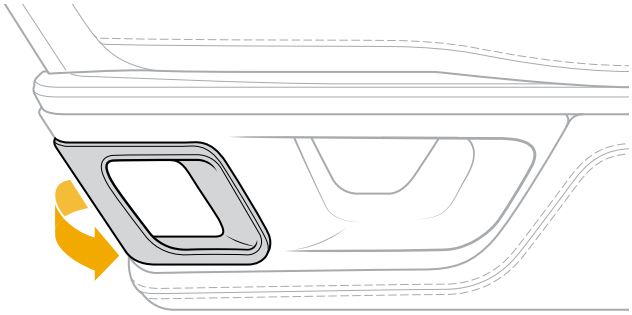

Roomy Entry and Exit

The roomy entry and exit feature setting allows the driver's seat and steering wheel to move automatically at the beginning and end of a drive for easier access. The setting and the entry and exit position are saved to your specific user profile. The roomy entry and exit feature is disabled by default.

> **IMPORTANT**
>
> A notification appears if the seat or steering wheel is not calibrated. If they are not calibrated, the Roomy Entry & Exit setting and automatic driving position adjustments will not be available. Contact Rivian Service to get the seat or steering wheel calibrated.

ROOMY ENTRY AND EXIT SETUP

1. Choose **Settings** from the menu on the center display, and then choose **Vehicle**.
2. Choose the **Access** button.
3. Press the **Set Position** button under Roomy entry and exit.
4. After you ensure there is nothing behind your seat, choose the **Got It** button to continue the setup.
5. Use the steering wheel thumb controls to adjust the steering wheel to your desired position.
6. Use the controls on the side of the seat to adjust the seat to your desired position.

WARNING

To prevent any injury or damage, ensure there is no occupant or any object(s) around or behind your seat when setting your entry and exit position.

7. Choose the **Remember Position** button to save your desired steering wheel and seat positions.

NOTE

To stop the automatic seat and steering wheel movement if needed, press any side seat control or any steering wheel button while the seat and steering wheel are moving. The feature functionality resumes as initially set up in the next drive.

8. After completing the setup, a toggle switch and Change Position and Forget Position buttons appear.

Button	Description
Toggle switch	Enables or disables your roomy entry and exit position.
Change Position	Make changes to your already saved steering wheel and seat positions.
Forget Position	Removes your saved position and turns off roomy entry and exit. If you forget the position and the setting turns off, you will have to setup the position again like you did the first time.
Set Position	Set up the roomy position for the first time or whenever there is no position saved.

NOTES

- The vehicle adjusts to your driving position when you enter the vehicle and press the brake pedal.
- Roomy entry and exit moves the seat to the entry and exit position when the driver unbuckles the seat belt at the end of a drive.

Kneel Vehicle

When Kneel vehicle upon parking setting is enabled, the vehicle lowers to make it easier for you to get in and out of it. This happens when you shift to Park when the vehicle is at Standard ride height and in All-Purpose, Conserve, or Snow drive mode. The vehicle kneels regardless of the Auto ride height button selection. Kneel pauses when doors open. The Kneel Vehicle setting is saved to your specific user profile.

NOTE

Kneel vehicle upon parking is disabled by default.

ENABLE OR DISABLE KNEEL VEHICLE UPON PARKING

1. Choose **Settings** from the menu on the center display, and then choose **Vehicle**.
2. Choose the **Access** button and turn on or off **Kneel vehicle upon parking**.

WARNING

To prevent any injury or damage, ensure there is no person or any object(s) under the vehicle when parking while Kneel vehicle upon parking is enabled.

NOTES

- While lowering to Kneel, press the right steering wheel thumb control button to cancel the lowering and return to your previous ride height.
- Opening a door while lowering to Kneel pauses lowering temporarily. Lowering to kneel continues after the door is closed.
- If you manually exit Kneel by changing ride heights or drive modes, kneel gets re-engaged the next time you drive the vehicle above 5 mph (8 km/h) and then park.
- The vehicle automatically raises from Kneel and returns to your previous ride height after you start driving above 5 mph (8 km/h).
- The vehicle may not always lower to kneel depending on vehicle conditions like air suspension compressor temperature. Once the air compressor cools, the vehicle lowers to kneel the next time you drive above 5 mph (8 km/h) and then shift to Park.
- When switching between driver profiles with different Kneel Vehicle settings, the vehicle will not kneel until the next time you shift to Park and after driving about 5 mph (8 km/h).

Child Locks

Child locks are available on the rear vehicle doors. When engaged, child locks prevent passengers from opening the rear vehicle doors with the door handles on the inside of the vehicle. With child locks in place, you can open the rear vehicle doors from the outside only.

ENGAGE CHILD LOCKS

1. Open the rear door and locate the rubber circle on the door's edge.
2. Pry off the circle.

CAUTION

Don't use a tool that may damage the paint on your vehicle.

3. Use a flathead screwdriver or the tip of a key to rotate the child lock about one-quarter turn to engage it.

- **Driver-side door:** Rotate counterclockwise to engage the child lock.

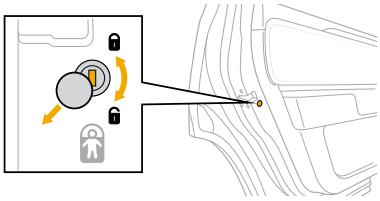

- **Passenger-side door:** Rotate clockwise to engage the child lock.

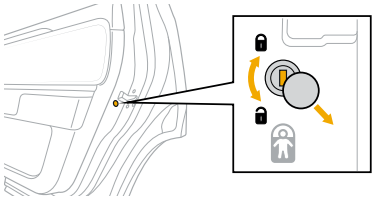

4. Replace the rubber circle over the child lock by firmly pushing it back into place.

DISENGAGE CHILD LOCKS

Manually disengage the child locks so that passengers can open the rear vehicle doors from the inside.

1. Open the rear door and locate the rubber circle on the door's edge.
2. Pry off the circle.
3. Use a flathead screwdriver or the tip of a key to rotate the child lock about one-quarter turn to disengage it.
   - **Driver-side door:** Rotate clockwise to disengage the child lock.
   - **Passenger-side door:** Rotate counterclockwise to disengage the child lock.
4. Replace the rubber circle over the child lock by firmly pushing it back into place.

Garages

> **NOTE**
> Gates are not currently supported.

Supported Garage Opener Brands		
AccessMaster	Allstar	AssureLink
BuildMark	Chamberlain	Craftsman
Do-It	Direct Drive	DTM System
Eazymatic	Genie	Guardian
Hormann	LiftMaster	Linear
Marantec	Master Mechanic	Merlin
Overhead Door	Performax	Raynor
Ryobi	Sommer	Wayne Dalton
Xtreme Garage		

ADD A GARAGE

Use the Add a Garage feature along with your garage door remote to pair an installed garage door opener with the vehicle. Do the following:

1. Park near and in front of the garage (not under the door).
2. Choose the **Garages** button in the status bar at the top of the center display.
3. Choose **Add a Garage**.
4. Follow the instructions on the screen to add the garage.

NOTES

- For some garage pairings, you may need the following:
  - Access to the installed garage door opener hardware unit
  - Another person to assist you
- You can pair up to 16 garages with a vehicle.
- You can also access the Garages menu in the center display from **Settings** ⚙ › Connect › Garages.

OPEN OR CLOSE A GARAGE DOOR

1. Choose the **Garages** button in the status bar at the top of the center display.
2. Choose the name of the desired garage door to open or close it.
3. If Quick access prompts are enabled, open or close a garage door when the prompt appears on the center display.

NOTE

Enable or disable Quick access prompts for one-tap access to your garages within range of their saved locations. Choose the **More** button to the right of the garage name to enable or disable Quick access prompts.

RENAME A GARAGE

1. Choose the **Garages** button in the status bar at the top of the center display.
2. Choose the **More** button to the right of the garage name.
3. Select **Change Name**.
4. Use the keyboard to enter a new name for the garage.

DELETE A GARAGE

1. Choose the **Garages** button in the status bar at the top of the center display.
2. Choose the **More** button to the right of the garage name.
3. Select **Remove** to delete the garage.

SEATING

Airbags

This vehicle is equipped with supplemental restraint system (SRS) airbags, designed to help protect the driver and front passengers from injuries. The airbags supplement the crash protection provided by correctly fastened seat belts. The vehicle is equipped with airbags and shoulder and lap seat belts for the driver and passengers.

The supplemental airbags are not a substitute for wearing seat belts. All occupants, including the driver, should wear their seat belts. Failure to use seat belts increases the risk of severe injury or death in the event of a crash.

The airbags don't require routine maintenance. If it is necessary to modify the airbag system for a person with disabilities, contact Rivian Service. The modification may affect the function of the advanced airbag system.

AIRBAG SYSTEM STATUS

Before you drive the vehicle, the Airbag Status indicator appears in the driver display for a few seconds during the initial function check when you start the vehicle. After the function check, the Airbag Status indicator turns off. The components in the safety system monitored by the indicator are as follows:

- First row driver and passenger airbags, designed to work with seat belts
- First row seat belts with pretensioner and seat belt usage sensors
- Seat belts with pretensioners in the second row outboard seating positions
- Driver seat position sensor
- First row driver and passenger knee airbags
- First row side airbag
- First and second roof rail airbags
- First row passenger occupant classification system
- Front crash sensors
- Side and rollover crash sensors
- Restraints control module
- Restraints warning lamp and tone
- High-voltage disconnect
- Electrical wiring that interfaces with the airbag sensor, seat belts, pretensioners, and high-voltage system
- Chassis stability control sensors

If the airbag system has a fault, the Airbag Status indicator remains on. Contact Rivian Service for repair.

HOW THE AIRBAGS WORK

The airbag system sensors detect the severity of a crash when the crash conditions reach a certain threshold. When the threshold is reached, the specific restraints will deploy. If there is significant vehicle deceleration, the airbags deploy instantly with a loud sound. Not all collisions deploy the airbags. For example, certain low severity collisions and rear collisions don't deploy the airbags.

AIRBAG LOCATIONS

Airbag inflators are positioned around passengers in the cabin.

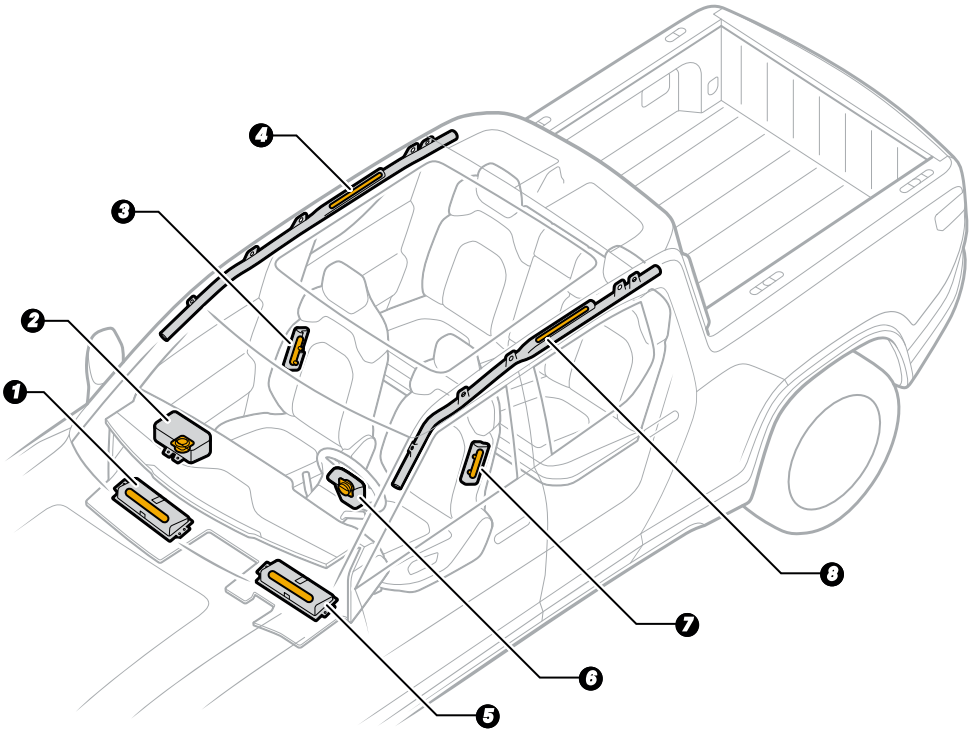

Airbag Inflator	Description
1	Front passenger knee airbag inflator
2	Front passenger airbag inflator
3	Side airbag inflator
4	Roof rail airbag inflator
5	Driver knee airbag inflator
6	Driver airbag inflator
7	Side airbag inflator
8	Roof rail airbag inflator

DRIVER AND PASSENGER AIRBAGS

The driver and passenger airbags perform the following functions:

Location	Function
Driver and front passenger airbags	In frontal crashes and crashes with frontal deceleration, the driver and front passenger airbags help protect the front occupants from frontal impacts and other directional impacts.
Driver and front passenger knee airbags	The knee airbags work with the driver and front passenger airbags to help protect the lower extremities of the driver and front passenger. The knee airbags also help position the driver and passenger to improve the effectiveness of the front airbags.
Roof rail airbags	The roof rail airbags inflate along the side windows to help protect the driver and passengers from a significant side impact, rollover, or near rollover. The roof rail airbags inflate from the roof rail between the front and rear seats.
Side airbags	The side airbags inflate from the sides of the driver and front passenger seats. These airbags may help prevent injury from side impact and some frontal impacts.

WARNINGS

Maintain Distance from Side and Roof Rail Airbags

DANGER

Passengers, including children, should not lean against or sleep on the side windows or doors, even if they are in a child restraint. The roof rail and side airbags need room to inflate and could cause severe injury or death if passengers are too close to the airbags. Always wear seat belts, even though you have roof rail and side airbags.

Maintain Proper Positioning

DANGER

- Maintain a distance of at least 10 in (25 cm) between the driver's chest and the driver's airbag, as recommended by the National Highway Traffic Safety Administration (NHTSA).
- Never place a rear-facing child seat in front of an active airbag. The safest place for children 12 years old and under is in the rear seats in a suitable child restraint.

Objects Can Interfere with Airbags

DANGER

- Don't place objects on or near the airbags. Objects in front of the airbags can cause serious injury if the airbags deploy in a severe collision.
- Don't mount equipment or place objects along the interior headliner or on the vertical pillars near the seat belts. Such objects may prevent the side or roof rail airbags from deploying in a severe collision.
- Don't install seat covers. Seat covers could prevent the side airbags from inflating.

Airbag Components May Be Hot After Deployment

WARNING

Some airbag system components, such as inflators, may be hot after airbags deploy. To reduce the risk of injury, don't touch the airbag system components after they inflate.

PASSENGER SEAT OCCUPANT CLASSIFICATION SYSTEM

This vehicle has a passenger seat Occupant Classification System (OCS) that disables the passenger airbag under certain conditions:

- The front passenger seat is unoccupied.
- Lightweight objects such as a bag or backpack are on the seat.
- A child is seated in a child restraint, booster seat, or if a very small child is in the seat. The safest place for children 12 years old and under is in the rear seats in a suitable child restraint, even if the vehicle is equipped with an Occupant Classification System.
- The passenger shifts their weight off of the seat.
- There is a malfunction in the seat sensor.

If the Occupant Classification System senses any of these conditions, the Passenger Airbag Off indicator appears in the center display.

DEPLOYED AIRBAGS

You won't be able to drive the vehicle after airbags are deployed or if the vehicle has been in a severe rear crash. An internal safety device automatically shuts off the high-voltage system when the airbags deploy. The vehicle will need to be towed to a repair shop and then repaired to drivable condition.

> **NOTE**
>
> The vehicle has a roof rail airbag on both the driver side and passenger side. If a front or roof rail airbag deploys due to a rollover accident, the Airbag Malfunction indicator lights up in the driver display. Contact Rivian Service to have the vehicle serviced.

Seats

ADJUST THE POWER SEATS

Adjust the power seats using the seat controls. You can adjust the slide, recline, tilt, lift, and lumbar on the driver and front passenger seats. Lumbar support adjustment is available on some vehicle packages.

Driver's Seat

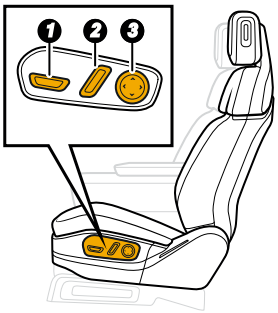

Item	Description
1	Slide, lift and tilt control
2	Recline control
3	Lumbar support adjustment

Passenger's Seat

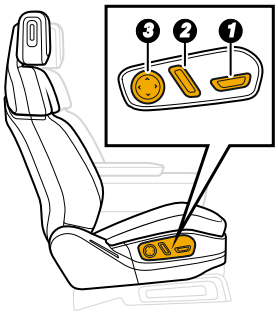

Item	Description
1	Slide and lift control
2	Tilt and recline control
3	Lumbar support adjustment (if equipped)

SEAT CLIMATE CONTROLS

The driver's seat, front passenger seat, left rear seat, and right rear seat can heat. Ventilation may also be included. Refer to Use Seat Climate Control.

UNDER-SEAT STORAGE

Locate the storage drawers under the driver and passenger seats. See additional information about Under-Seat Storage.

Seat Belts

DANGER

Adjust the seat to the proper position before operating the vehicle. Make sure the shoulder belt sits firmly across your chest and shoulder. Don't operate the vehicle if there is a gap between the seat belt and your chest.

To avoid risk of injury or death from sudden stops, collisions, or improper use, do the following:

- Use one seat belt per person.
- Fasten seat belts before the vehicle starts to move to avoid risk of injury from sudden stops or collisions.
- Ensure that all seat belts are fastened securely.
- Ensure that the seat belt isn't worn twisted or reversed.
- Wear the seat belt so that it rests over the shoulder without touching the neck. Don't route the belt behind your back.
- Wear the lap belt as low as possible on your hips.
- Sit well back in the seat and in an upright position.
- Don't tamper with or make modifications to the seat belt that will prevent it from taking up slack, such as using "comfort clips." A slack seat belt could significantly reduce the effectiveness of the shoulder belt in an accident.
- Take care handling the metal portion of the seat belt as it can become very hot in sunny weather.
- Have a service professional routinely inspect all seat belt parts. In case of an accident, we recommend taking the vehicle to a Rivian certified collision center for a safety inspection. In some cases, seat belt parts in use during an accident may need to be replaced, even if there isn't any visible damage.

SEAT BELT REMINDER

- Fasten the seat belts properly when operating the vehicle.
- The Seat Belt Reminder indicator lights up in the instrument cluster panel of the driver display if the seat belt is unbuckled for a seat with an occupied driver or passenger.
- The system provides a warning, and the Seat Belt Reminder indicator stays on for one minute if the driver or passenger seat belt remains unbuckled.
- At the end of the warning period, the Seat Belt Reminder indicator stays on, and the system sounds a warning chime once the vehicle is traveling at a speed greater than 3 mph (5 km/h) for at least 5 seconds.
- If the seat belt light stays on without an occupant in the seat, ensure that no heavy object is placed on the seat.

CHILDREN

Children should be in the rear seats and properly restrained in a child seat appropriate for their height and weight.

If the child is too big for a child seat, they can be restrained using the seat belt. For proper fit, the shoulder belt should cross over the child's front and not touch the face or neck. The lap belt should be secured as low as possible on the hips and not on the child's waist. See also Child Seats.

EXPECTANT MOTHERS

The lap belt should be worn securely and as low as possible over the hips and not over the waist. The shoulder belt should be worn between the breasts and to the side of the abdomen.

FASTEN SEAT BELTS

1. Adjust the seat to an upright position.
2. Sit with your back and hips against the back of the seat.
3. Hold the tongue plate and pull the belt toward the buckle.

> **NOTE**
>
> Avoid twisting the seat belt, and avoid quick or jerky movements to prevent the belt from locking.

4. Insert the tongue plate into the buckle until you hear a click.

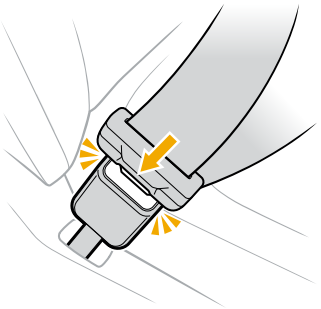

5. Adjust the lap belt to be as low as possible on the hips.

6. Press and hold the shoulder anchor button and slide it up or down to adjust the shoulder belt height.

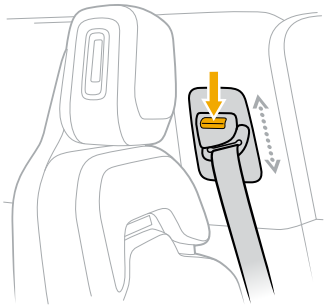

WARNING

The shoulder belt should pass over the middle of the shoulder and across the chest without touching the neck. The seat belts aren't meant to be used with any tension-relieving devices, such as "comfort clips." Wearing the belt in an improper position or introducing slack to the belt could significantly reduce its effectiveness in an accident.

UNFASTEN SEAT BELTS

1. Press the release button on the buckle.
2. Allow the seat belt to retract slowly to avoid any twists.
3. Ensure that the belt has fully retracted to avoid closing the door on the belt or tongue plate.

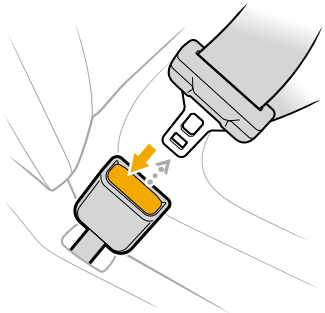

SEAT BELT PRETENSIONERS

If the seat belt pretensioners have been activated or are malfunctioning so that the seat belts can't retract or pull out, the airbag indicators will appear on the driver display. Contact Rivian Service for assistance or service.

CAUTION

Modifications or front-end attachments to the vehicle, such as bars, winches, or snow plows, may affect seat belt pretensioner sensors. Don't modify the vehicle with parts not approved by Rivian.

SEAT BELT MAINTENANCE

Use mild soap with water and a soft cloth to clean surface stains on the seat belt. Inspect the seat belts periodically for signs of damage, including wear and tear. Contact Rivian Service to schedule service for your seat belts.

Don't use bleach or other harsh substances to clean the belts because this can affect their strength and performance. Don't make modifications to the seat belts that would prevent them from properly operating.

Head Restraints

FRONT SEAT HEAD RESTRAINTS

The driver's seat and passenger seat are equipped with integrated head restraints. The integrated head restraints aren't adjustable.

REAR SEAT HEAD RESTRAINTS

The rear outboard head restraints aren't adjustable. The center head restraint is adjustable. To adjust, pull up on the center head restraint until it locks in place.

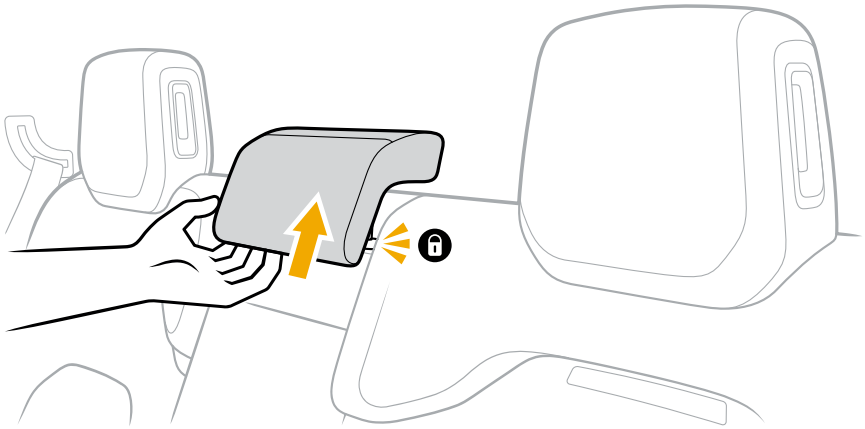

To lower the head restraint, push the button at the bottom of the left head restraint rod while pushing down on the top of the head restraint.

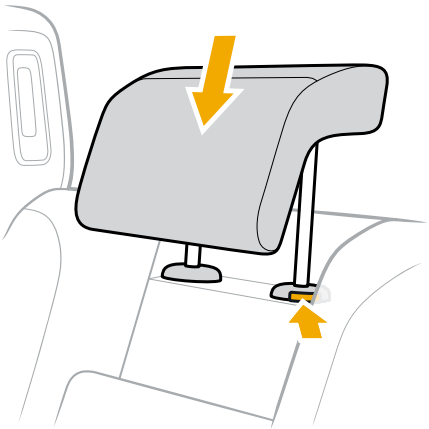

DANGER

Lift the center head restraint into its locked position before a passenger occupies the rear center seat to help minimize the risk of injuries, including neck injuries, in the event of a crash. The driver should not operate the vehicle until the rear center head restraint is in the locked position.

The head restraints can be removed from the rear outboard seats by pushing the buttons at the bottom of the head restraint rods and lifting the head restraint straight up.

CAUTION

Removal and re-installation of the outboard rear head restraints should only be performed by qualified service personnel.

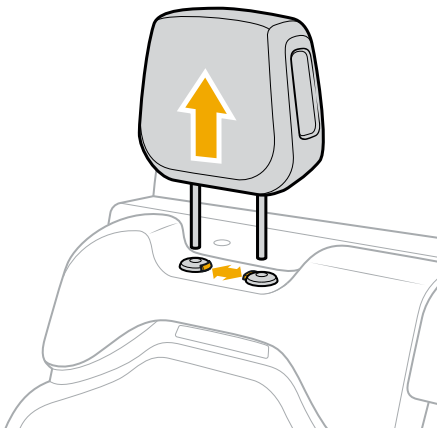

To reinstall the head restraint, align the rods with the holes at the top of the seat and push the top of the head restraint all the way down until it locks in place.

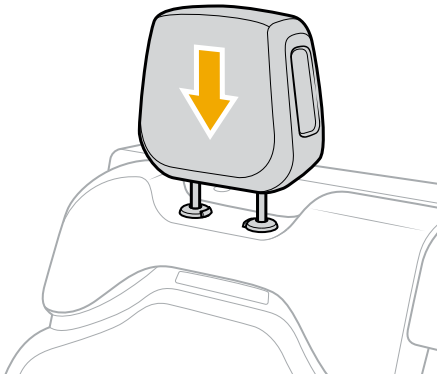

DANGER

Ensure the outboard head restraints are all the way down into the locked position before a passenger occupies the outboard seats to help minimize the risk of injuries, including neck injuries, in the event of a crash. The driver should not operate the vehicle until the outboard head restraints are in the locked position.

Child Seats

DANGER

- The National Highway Traffic Safety Administration (NHTSA) requires that infants and small children be seated in an approved and appropriate child seat at all times while the vehicle is in motion.
- Properly secure the child seat before the vehicle is in motion, even if the child seat is unoccupied, because an unsecured child seat can injure passengers.
- Don't install a child seat in any of the front seats to avoid serious injury and death to the child from the deployment of the airbags. According to accident statistics, children are safer when properly restrained in the rear seating positions than in the front seating positions.
- Properly secure child restraints in the vehicle to avoid endangering children in a crash.
- Sunny weather can heat up the metal portion of the seat belts. Use caution when seating a child and touching seat belts in the vehicle.

WARNING

- You can use your Rivian account (user profile) to automatically move the driver's seat to a desired position. However, ensure that the front seats are a safe and comfortable distance from a child seat or a child sitting directly behind them in the second row.
- Don't dress children in bulky clothing when seating them in child seats since this may reduce the effectiveness of the restraint system.
- Don't leave children unattended, even if they are secured in a child seat.
- Don't use a child seat that has been involved in a collision, even if it doesn't show any sign of damage.

All child restraint systems are designed to be secured in vehicle seats by the following:

- Lap belts
- Lap belt portion of a lap-shoulder belt
- Lower and tether anchorages (LATCH/ISOFIX)

CHOOSE A CHILD SEAT

Children should sit in the rear seats, properly restrained in child or booster seats appropriate for their height and weight. Use a child seat that meets the Federal Motor Vehicle Safety Standards (FMVSS) and is appropriate for the child's age, height, and weight. Also check child seat usage recommendations with local and state laws, the American Academy of Pediatrics (AAP), and the National Highway Traffic Safety Administration (NHTSA). Compliance documentation can either be found on a sticker affixed to the child seat or in the instructions included with the seat. Follow the manufacturer's instructions when installing a child seat in the vehicle. Before you purchase a child seat, determine if the seat is compatible with your vehicle.

INSTALL A CHILD SEAT

Follow the state and seat manufacturer guidelines for whether to install the child seat rear- or forward-facing. These rules are often based on the child's age, height, and weight.

If a child seat can't be installed securely in the rear-center seating position due to seat size, space limitations, or seat contours, install the child seat on either side position of the outboard seats near the windows. The rear-center seating position may best accommodate a smaller booster seat or an infant bucket seat with a bottom base that fits snugly against the contours of the seat cushions. These types of child seats should be secured snugly with the vehicle's seat belt.

1. Position the child seat either rear-facing or forward-facing on the vehicle's seat.

IMPORTANT

If a forward-facing child seat requires a top tether, latch the hook into the tether anchorage behind the seat and tighten the belt.

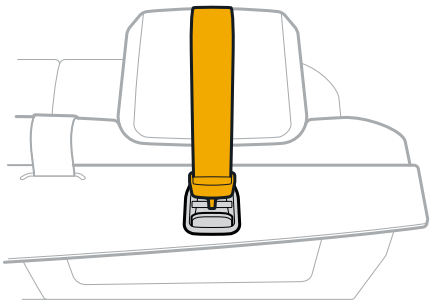

2. Run the vehicle's seat belt through the belt path as instructed by the child seat manufacturer instructions.

> **NOTE**
>
> If installing a seat base that accompanies an infant bucket seat, you may need to clip the seat belt in place with the belt lock off as directed by the seat manufacturer.

3. Insert the tongue plate of the seat belt into the buckle until it clicks.
4. Pull on the lap belt to take up the slack and ensure a tight fit.
5. Pull out the shoulder belt fully from the retractor and then allow the belt to retract. The seat belt locks into place as it retracts.
6. Push the child seat down and toward the back cushion of the vehicle seat, taking out as much slack from the seat belt as possible.

IMPORTANT

Install the child seat snugly so that its base at the belt path cannot move more than 1 in (2.5 cm) from side to side. Ensure that the seat is firmly secured before driving the vehicle.

Install Child Seats with LATCH

LATCH (Lower Anchors and Tethers for Children) or ISOFIX is a child seat installation option that allows you to install child seats without using the vehicle's seat belts. Instead, the child seats are secured to dedicated anchorage points on the vehicle seats.

Only use the LATCH system to install child seats in accordance with the manufacturer recommendations, including considerations to the child's height and weight. Follow instructions on child seat spacing with LATCH installation. Don't use LATCH in addition to the seat belt installation method. For forward-facing installation, LATCH can provide more stability with the top tether anchorage since it has an additional connection point between the child seat and the vehicle.

IMPORTANT

In the second row of this vehicle, only the two outboard seats support LATCH installation. The middle seat supports child seats that can be restrained with the seat belt only.

LATCH Seat Configuration

The second-row seats come with three upper (tether) anchorages and four lower (bar) anchorages, two for each outboard seat.

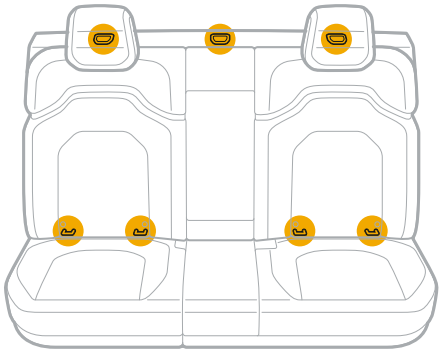

See Seats for how to fold the second row seats.

The lower anchorages are marked with this symbol:

They are located between the seat cushion and seat back.

The upper anchorages are marked with this symbol:

They are located on the rear seat anchor trim directly behind the seats.

1. Position the child seat between the two lower bar LATCH anchorages corresponding to where you are installing the child seat.
2. Connect the lower hooks of the child seat to the lower bar anchorages located in between the seat cushion and seat back. Avoid twisting the LATCH straps or snagging the vehicle seat belt.

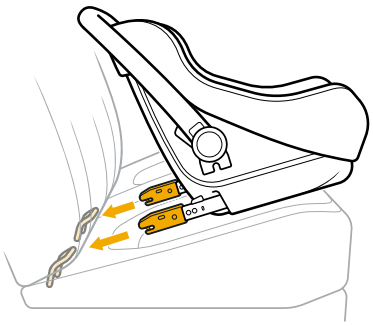

3. For a child seat with tether belts, pull on the tethers to remove any slack. Push the child seat into the bottom and back cushions of the vehicle seat for a tight fit.
4. Attach the top tether hook to the appropriate top anchorage point and tighten the belt to remove any slack.

- **Single-tether configuration:** Route the top tether belt over the center of the head restraint.

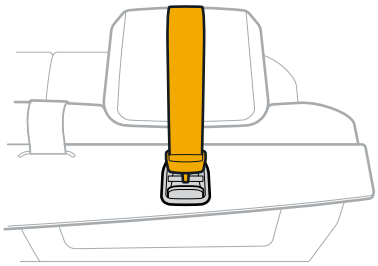

- **Double-tether configuration:** Route the two top tether belts to either side of the head restraint, wrapping the belts as close as possible to the head restraint without twisting them.

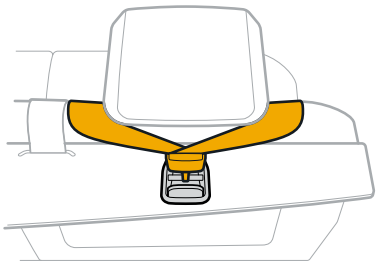

Install the Lower Anchorage Guide

This vehicle comes with sets of lower anchorage guides. These anchorage guides make the lower LATCH anchorage points more visible and hold open the cushions, letting you use less force to clip on the child seat lower anchorages.

1. Find the two lower anchorage markers corresponding to where you are installing the child seat. The lower anchorage bars are located in between the seat cushion and seat back.
2. Grip the square frame of the anchorage guide on both sides and push the part onto the lower anchorage bars until the guide sits securely in place. The flanged edges of the anchorage guide should sit flush against the seat back.

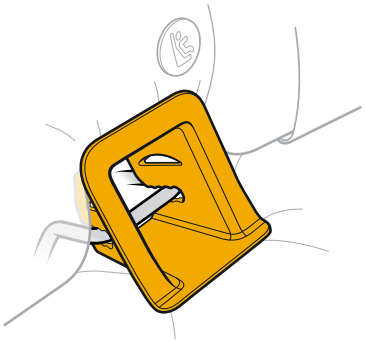

NOTES

- Ensure the anchorage guide is installed as shown, not upside down.
- To remove the anchorage guide, grip the square frame on both sides and pull it straight out.
- Remove the anchorage guide before folding or flipping the seat.

INSTALL A BOOSTER SEAT

1. Position the booster seat in the front-facing position on the vehicle's seat and place the child well back into the booster seat.
2. Run the vehicle's seat belt through or around the booster seat and the child in accordance with the instructions that come with the booster seat. Ensure that the seat belt isn't twisted or reversed.
3. Insert the tongue plate of the seat belt into the buckle until you hear a click.
4. Ensure that the shoulder belt rests over the child's shoulder without touching the child's neck and that the lap belt is as low as possible on the hips.

WARNING

Check the placement of the seat belt for a child in a child seat. In the event of a collision or sudden braking, a high-positioned lap belt may increase the risk of injury to the abdomen or allow the child to slide under the belt.

Don't allow a child to wear the shoulder belt under the arm or behind the back.

REMOVE A SECURED CHILD SEAT

1. Press the release button on the buckle.
2. Guide the seat belt out of the belt path of the child seat.
3. Allow the seat belt to fully retract to avoid any twists. The seat belt returns to normal function and the locking mechanism deactivates after the seat belt returns to its fully retracted position.

> **NOTE**
> For child seats installed with LATCH, reverse the procedures of LATCH installation to remove the seat. See the child seat manufacturer's instructions for additional details.

AUTOMATIC LOCKING RETRACTOR (ALR)

The Automatic Locking Retractor (ALR) causes the seat belt to lock when pulled very quickly. ALR can be used to secure a child seat.

Activate ALR

1. Draw out the seat belt completely.
2. Retract the seat belt to the desired length to activate locking the seat belt in that position. Once locked, the seat belt cannot be extended further.

Cancel ALR

Restore the seat belt to normal function by unbuckling and retracting the seat belt fully. Cancel ALR when removing a child seat.

> **NOTE**
> ALRs are different from Emergency Locking Retractors (ELRs), which are designed to allow occupants to move freely once the seat belt is buckled, but lock up in the event of an accident. ALRs are only equipped on passenger seats.

WINDOWS AND MIRRORS

Windows

Four window switches on the driver's door operate all the power windows. The passenger doors have individual window switches. The front windows absorb solar rays with an acoustic laminate. The rear windows are tempered with a privacy tint.

OPEN OR CLOSE THE WINDOWS WITH THE WINDOW SWITCHES

The following actions allow you to open or close the windows:

- **Partial open or close:** Push or pull the window switch to the first notch to move the window to the desired position.
- **Express open:** Push the window switch down past the second notch and release.
- **Express close:** Pull the window switch up past the second notch and release.

> **NOTES**
>
> - Push or pull the window switch to pause the window's automatic motion.
> - If a window detects an obstacle, it partially reverses.
> - Lock the passenger windows from **Access and Security** on the center display.
> - If the windows don't fully express close or you get an error that says they need calibration, reset the windows.

OPEN OR CLOSE THE WINDOWS WITH THE KEY FOB

- Press, release, then press and hold the unlock button to open all the windows.
- Press, release, then press and hold the lock button to engage all locks and close all of the windows.

Side Mirrors

USER PROFILE SETUP

Each user profile can store mirror preferences such as auto-tint, mirror position, automatic folding, and automatic unfolding from the center display. If you unlock the car from the outside, the side and rear mirrors adjust according to your user profile.

ADJUST THE SIDE MIRRORS

1. Go to your Rivian account on the center display. Then, choose **Adjust Mirrors**.
2. Use the thumb control and thumb control buttons on the steering wheel to tilt the mirror up, down, left, or right.
3. Save the mirror position to your user profile on the center display, or restore the previous position.

> **NOTE**
>
> Use the **Restore** button on the center display to return the side mirrors to the previous position.

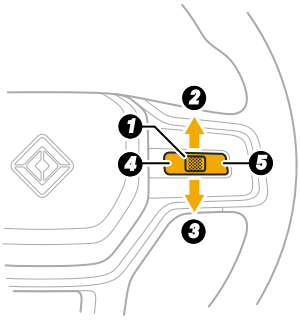

Item	Control	Function
1	Thumb control	Tilt mirror up or down
2	Thumb control up	Tilt mirror up
3	Thumb control down	Tilt mirror down
4	Left thumb control button	Move mirror left
5	Right thumb control button	Move mirror right

SIDE MIRROR FEATURES

Automatically Fold Side Mirrors

The side mirrors automatically fold and unfold based on user preferences when you approach with a key. Enable or disable automatic folding and unfolding from the center display. If automatic folding is enabled, the side mirrors fold when the vehicle locks.

> **NOTE**
> Side mirrors automatically unfold if you drive above 15 mph (25 km) even if automatic unfolding is disabled.

Manually Fold Side Mirrors

Fold or unfold the side mirrors manually through the center display to override automatic folding. Use this feature when you want to control mirror behavior in situations such as in tight parking spaces or driving off-road.

CAUTION

- To avoid damage to the side mirrors, ensure that the automatic fold and unfold option is turned off if you park the vehicle in a tight space. If the side mirror automatic unfold feature is turned on through Settings, the side mirrors unfold automatically if you approach the vehicle with a key.
- Go to the **Access and Security** screen in the center display to fold and unfold the side mirrors manually.

Tint Control

Side mirrors automatically tint at night in response to the ambient lighting sensors in the rearview mirror. Side mirrors also tint when the rearview mirror's sensors detect more light from the rear of the vehicle. You can enable or disable this function from the center display.

NOTE

Side mirrors don't tint when the vehicle is in Reverse or Park.

Defrost

Use the climate control system to defrost the side mirrors.

Entry Lights

The entry lights illuminate the area under the side mirrors. Go to **Settings** › **Vehicle** › **Exterior lights** on the center display to turn the entry lights on or off. Note the following:

- The entry lights setting turns the entry lights on when you open any door.
- The lighting sequence setting turns the entry lights on when you unlock your vehicle from close proximity.
- Entry lights activate or deactivate when you open any door, or based on your proximity.
- If you enable passive entry, the entry lights turn on when you approach the vehicle.
- If you disable passive entry, the entry lights turn on when you open any door.

Rearview Mirror

MOVE REARVIEW MIRROR

You can manually adjust the rearview mirror.

TINT CONTROL

The rearview mirror tints automatically based on the ambient lighting. However, the rearview mirror does not tint when the car is in Park or Reverse.

CAUTION

Don't spray liquid directly on the rearview mirror. The electronics inside shouldn't get wet. To clean the rearview mirror, spray cleaning liquid on a cloth and wipe the mirror down.

Toll Devices

To determine where to place a toll device—such as a sticker or transponder—in the vehicle, follow instructions provided by the toll collection company.

> **NOTE**
> Placing a toll device on the interior of the windshield behind the rearview mirror does not interfere with the sensor for the garage door opener.

LIGHTS

Exterior Lights

FRONT AND REAR LIGHTS

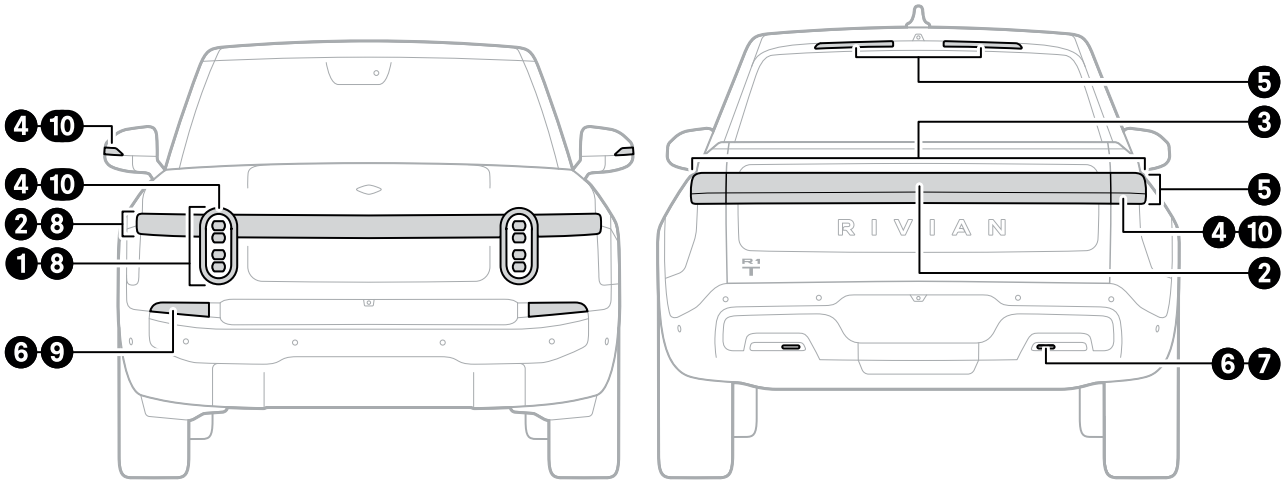

Item	Name	Description
1	Headlights	Lights at the front of vehicle cast a wide beam so you can see the road, objects, and pedestrians at night.
2	Center light bars	The light bars at the front and rear of the vehicle indicate the charging status. They pulse green when the vehicle is charging, stay green when the vehicle is at full charge, and turn off when the vehicle is locked or sleeps.
3	Taillights	Red lights at the rear of the vehicle help ensure other drivers can see the vehicle at night.
4	Turn signals	Amber front turn signals and red rear turn signals alert other drivers that you plan to turn or change lanes.
5	Brake lights	Red lights at the rear of the vehicle and red light strips above the rear window alert other drivers when the vehicle slows or stops.
6	Fog lights	Front fog lights are low and angled to the ground to help you see the road better in foggy conditions. Rear fog lights help ensure other drivers can see the vehicle in foggy conditions.
7	Reverse lights	White lights at the rear of the vehicle alert other drivers that the vehicle is in Reverse and may back up.
8	Daytime running lights or parking lights	Lights at the front and sides of the vehicle make it more visible to other drivers while you drive or park it. Daytime running lights are brighter than parking lights.
9	Guide lights	Lights at the front of the vehicle help you and passengers see the surroundings at night.
10	Hazard lights	Amber front and red rear turn signals flash at the same time to alert other drivers of a hazard or emergency. In the event of an emergency or malfunction, press the **Hazard Lights** button on the overhead console to turn on the hazard lights and alert surrounding vehicles.

SIDE LIGHTS

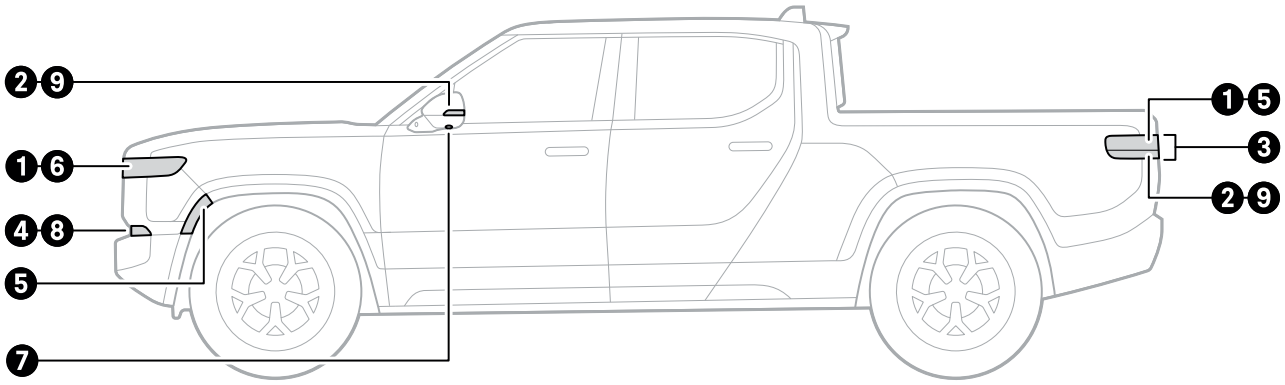

Item	Name	Description
1	Center light bars	The light bars at the front and rear of the vehicle indicate the charging status. They pulse green when the vehicle charges, stay green when the vehicle is at full charge, and turn off when the vehicle is locked or sleeps.
2	Turn signals	Amber front turn signals and red rear turn signals alert other drivers that you plan to turn or change lanes.
3	Brake lights	Red lights at the rear of the vehicle and red light strips above the rear window alert other drivers when the vehicle slows or stops.
4	Fog lights	Front fog lights are low and angled to the ground to help you see the road better in foggy conditions. Rear fog lights help ensure other drivers can see the vehicle in foggy conditions.
5	Front and rear side markers	Lights and reflective markers make the vehicle more visible to other drivers during the day and night.
6	Daytime running lights or parking lights	Lights at the front and sides of the vehicle make it more visible to other drivers while you drive or park it. Daytime running lights are brighter than parking lights.
7	Entry lights	Side mirrors project the Rivian Compass logo to light the ground when you or a passenger unlocks the vehicle or opens a door.
8	Guide lights	Lights at the front of the vehicle help you and passengers see the surroundings at night.
9	Hazard lights	Amber front and red rear turn signals flash at the same time to alert other drivers of a hazard or emergency. In the event of an emergency or malfunction, press the **Hazard Lights** button on the overhead console to turn on the hazard lights and alert surrounding vehicles.

TRUCK BED LIGHTS

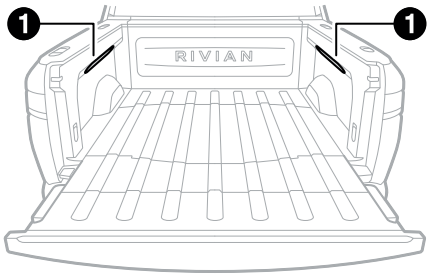

Item	Name	Description
1	Truck bed lights	White truck bed lights in each sidewall illuminate gear and cargo. Turn on the truck bed lights through one of the following: • **Automatic Options:** Open the tailgate, or open or close the powered tonneau cover, if equipped. • **Manual Options**: Choose **Vehicle** from the menu on the center display, or press the tailgate button on the exterior bed rail while the tailgate is open and unlocked. The truck bed lights turn off under the following conditions: • The tailgate closes. • If equipped, the power tonneau cover closes while the tailgate is closed. • Press the tailgate button on the exterior bed rail while the tailgate is open. • Choose **Vehicle** from the menu on the center display. • Shift the vehicle from Park to **Reverse**, **Neutral**, or **Drive**. If the truck bed lights were automatically turned on, they also turn off under the following conditions: • The timer expires after 2 minutes. • The vehicle becomes locked. If the truck bed lights were manually turned on, they also turn off under the following conditions: • The timer expires after 10 minutes. • Lock the vehicle from the Rivian mobile app, or double press the lock button on the key fob. **NOTES** • After the truck bed lights turn off, you have 30 seconds to turn them on again while the vehicle is locked: press the tailgate button on the exterior bed rail while the tailgate is open. • The truck bed lights won't automatically turn on if you chose Stay off in the Camping app.

CONTROL THE HEADLIGHTS AND TAILLIGHTS

Use the light switch on the lights stalk to control the headlights, taillights, and fog lights. In Auto mode, lights turn on automatically when sensors detect that it's dark outside.

- Push the light switch up to select a higher setting and turn on lights. Hold the light switch up to scroll up.
- Push the light switch down to select a lower setting and turn off lights. Hold the light switch down to scroll down.

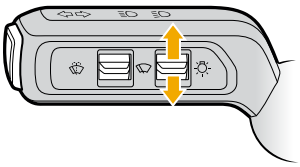

NOTES

- In winter conditions, you may need to remove snow and ice from the headlights.
- The right and left headlights are aimed in an asymmetrical pattern. This improves visibility while driving at night and minimizes the amount of light directed at oncoming drivers. If you notice reduced visibility, contact Rivian. The headlights are not user-serviceable.

The driver display shows the lights turned on or off as follows:

Icon	Name
	Lights + all fog
	Lights + front fog
	Lights
	Auto (default)
	Parking lights
	Off

CONTROL THE HIGH BEAMS

High beams increase forward visibility in dimly lit areas. To control the high beams manually, use the lights stalk on the left side of the steering wheel. To enable automatic control of the high beams, turn on **Automatic High Beams** on the center display.

Use the Lights Stalk

- Pull the lights stalk toward you to turn on the high beams. High beams stay on as long as you hold the lights stalk. Release the lights stalk to turn off the high beams.
- When the low beams are already turned on, push the lights stalk away from you to turn on the high beams. Push the lights stalk away again to turn off the high beams.

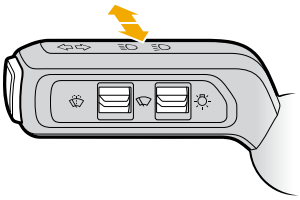

IMPORTANT

Ensure high beams are appropriate for the current weather and driving conditions.

Icon	Name
	High Beams
	Automatic High Beams

Use Automatic High Beams

To turn on Automatic High Beams, choose **Settings** from the menu on the center display. Choose **Vehicle**, and then choose **Exterior lights**. Turn on **Automatic High Beams**.

To use Automatic High Beams, the vehicle lights must be on and not set to Parking Lights or Off mode.

NOTES

- Automatic High Beams switches from high to low beams when an oncoming vehicle approaches or when your vehicle approaches another vehicle.
- To temporarily turn off Automatic High Beams, push or pull the lights stalk.

Lights Status	Action
• Automatic High Beams setting on • High beams off	Push the lights stalk away from you to turn on high beams and temporarily turn off Automatic High Beams. To turn on Automatic High Beams again, push the lights stalk away from you. The high beams may remain on if your vehicle doesn't detect an oncoming vehicle.
• Automatic High Beams setting on • High beams on	Push the lights stalk away from you to turn on low beams and temporarily turn off Automatic High Beams. To turn on Automatic High Beams again, push the lights stalk away from you. The high beams may remain off if your vehicle detects an oncoming vehicle.

USE THE TURN SIGNALS

Push the lights stalk on the left side of the steering wheel to control the turn signals. Lightly push to flash the turn signals three times. Push until it clicks to flash continuous turn signals. Turn signals stop when you move the steering wheel or lights stalk in the opposite direction.

- Push the lights stalk up to indicate a right turn or lane change.
- Push the lights stalk down to indicate a left turn or lane change.

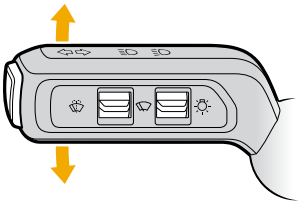

TURN ON THE HAZARD LIGHTS

Press the **Hazard Lights** button on the overhead console to turn on the hazard lights. Press the button again to turn the hazard lights off. See Emergency SOS.

CHANGE THE EXTERIOR LIGHTS SETTINGS

Choose **Settings** from the menu on the center display and then choose **Vehicle**. Choose **Exterior lights** to access the following controls:

- **Interactive lighting:** Turn on **Interactive lighting** to have the light bars react when you lock or unlock the vehicle and control the following settings:
  - **Light bars when charging:** Turn on **Light bars when charging** to have the light bars indicate the charging status while the vehicle charges. The light bars turn off if the vehicle is locked or sleeps while it charges.
  - **Entry lights:** Turn **Entry lights** on or off to have the entry lights turn on or off when you unlock the vehicle or open your doors.
  - **Guide lights:** Turn on **Guide lights** to have the guide lights turn on at night when you lock or unlock the vehicle. Choose how long the guide lights stay turned on after you lock the vehicle.
- **Charge port light when locked:** The charge port light turns on while the vehicle charges. You can choose to have the charge port light automatically turn on or off when the vehicle is locked.
- **Automatic high beams:** To use Automatic High Beams, turn on **Automatic High Beams**.

Cabin Lights

To control the cabin lights, choose **Vehicle** from the menu on the center display, or use the rear display.

Choose the **Cabin Lights** button to turn the cabin lights on or off.

Choose **On with door** to automatically turn on the cabin lights when the doors open. Choose **Stay off** to keep the cabin lights turned off when the doors open.

When the cabin lights are turned on, you can adjust the brightness.

> **NOTE**
> You can use the center display to lock the rear display so rear-cabin passengers can't control the cabin lights.

READING LIGHTS

Use touch to control the reading lights.

Touch once to turn on at full brightness. Touch a second time to dim brightness and a third time to turn off.

Reading lights are located in the following areas:

- Overhead console between the driver and passenger seats
- Sides above the door area for the rear seats

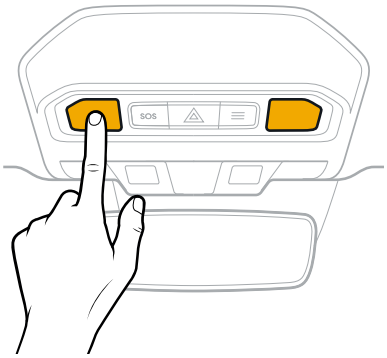

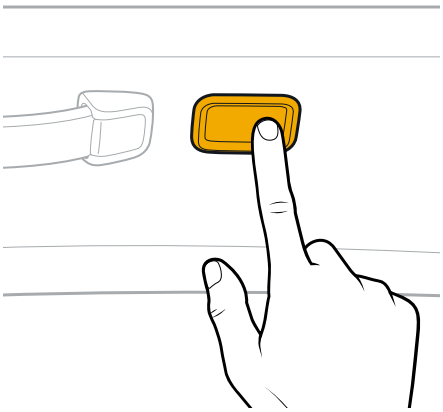

ACCENT LIGHTS

Accent lights are located in the following areas:

- Front footwells
- Door pockets
- Dashboard
- Center console
- Door trim

Turn accent lights on or off and adjust their brightness during low light conditions.

Rivian Torch

DANGER

Keep the torch away from high heat sources and fire.

WARNING

Don't shine the torch at anyone's eyes.

CAUTION

If the torch is in the charging compartment, ensure that the torch is completely seated before closing the driver-side door. If you close the driver-side door while the torch sticks out, this may damage the door, door frame, or torch.

USE THE TORCH

1. To release the torch from its charging compartment in the driver-side door, press it firmly.
2. Wait two seconds for the charging compartment to release the torch.
3. Pull out the torch.

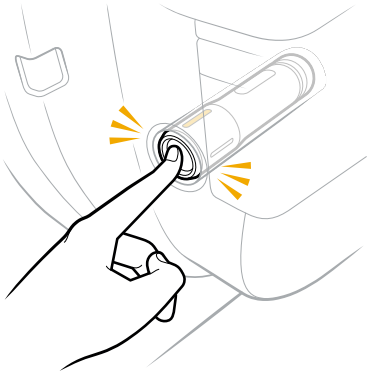

4. Press the switch (1) to turn on Low.
5. Press again to select the next brightness setting.

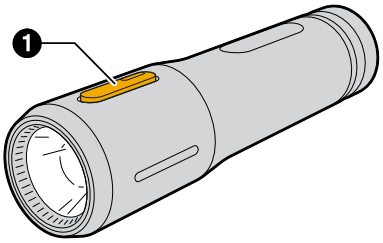

To turn off the light, use the switch to cycle through the settings, or press and hold the switch.

NOTE

The light flashes three times to indicate a low battery charge.

TORCH SETTINGS

Setting	Brightness*	Use Time before Recharge*
Low	Up to 60 lumens	Up to 18 hours
Medium	Up to 350 lumens	Up to 7 hours
High	Up to 1,000 lumens	Up to 2 hours
Off	—	—

* Varies depending on the ambient temperature and battery health.

CHARGE THE TORCH

IMPORTANT

Ensure the torch is clean before charging. Use a microfiber cloth to remove any dirt or debris.

1. Return the torch to its charging compartment in the driver-side door.
2. Press firmly until it clicks into place.

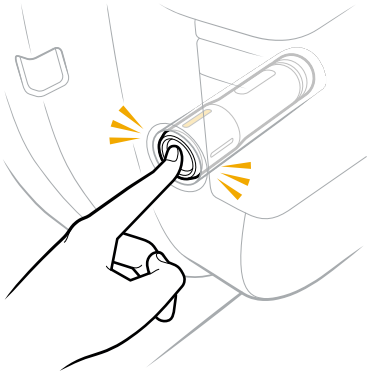

The torch takes up to 2.5 hours to fully charge.

NOTE

To check if the torch is charging, turn it on before returning it to its charging compartment. The torch automatically turns off if it is charging.

REPLACE THE BATTERY

WARNING

- Power the torch with the Rivian-supplied battery only. To obtain a new rechargeable battery, contact Rivian.
- Don't allow the bottom of the lithium-ion battery to touch a metal object. This could short-circuit the battery.
- Don't dispose of the battery in a fire. To dispose of any used battery, follow the local regulations for the disposal of household hazardous waste.

1. Unscrew the end cap (2).

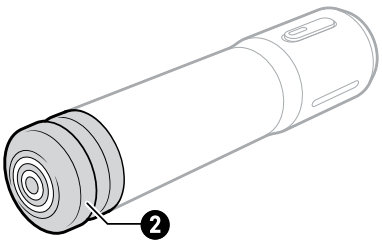

2. Remove the old battery and insert the new battery.
3. Screw on the end cap.

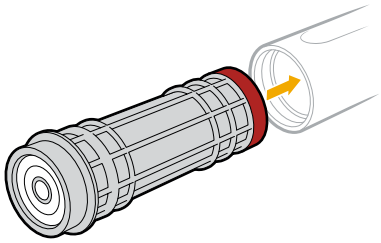

MAINTAIN THE CHARGING COMPARTMENT

CAUTION

Clean the charging compartment with a vacuum cleaner only. Don't use compressed air.

1. To release the torch from its charging compartment in the driver-side door, press it firmly.
2. Wait two seconds for the charging compartment to release the torch.
3. Pull out the torch.
4. Use a vacuum cleaner to clean the charging compartment.

Show and Tell

Show and Tell mode does the following:

- Keeps the displays and exterior lights turned on.
- Keeps the vehicle awake.
- Disables the horn.
- Disables proximity locking and unlocking.
- Sets the lights to **Auto**, which allows for the brightest lights, if lights are turned off when you enable Show and Tell mode.
- Disables climate and enables Limit Climate Performance by default. Limit Climate Performance turns off air conditioning to avoid water buildup under the vehicle.

> **NOTES**
> - With Limit Climate Performance enabled, the fan is still available.
> - Turn off **Limit Climate Performance** to enable the air conditioning controls.

- Directs any SOS calls to a test number.

> **NOTE**
> To make an actual SOS call, choose **Exit Show and Tell** and then press the **SOS** button SOS.

To turn on Show and Tell mode:

1. Put the vehicle in **Park**. Show and Tell mode is only available while the vehicle is in Park.
2. Go to **Settings** ⚙ › **Vehicle** › **Service** on the center display.
3. Turn on **Show and Tell**.

> **IMPORTANT**
> When turned on, Show and Tell mode reduces the range of the vehicle over time.

Show and Tell mode automatically turns off under any of the following conditions:

- The vehicle has 30 mi (49 km) of range left.
- You shift the vehicle out of Park.
- You use the lights stalk to turn off the headlights.

CLIMATE

Climate Control

The vehicle offers two climate zones in the cabin. Each zone contains a front seat and the area behind it. Control the main climate for each zone with buttons at the bottom of the center display.

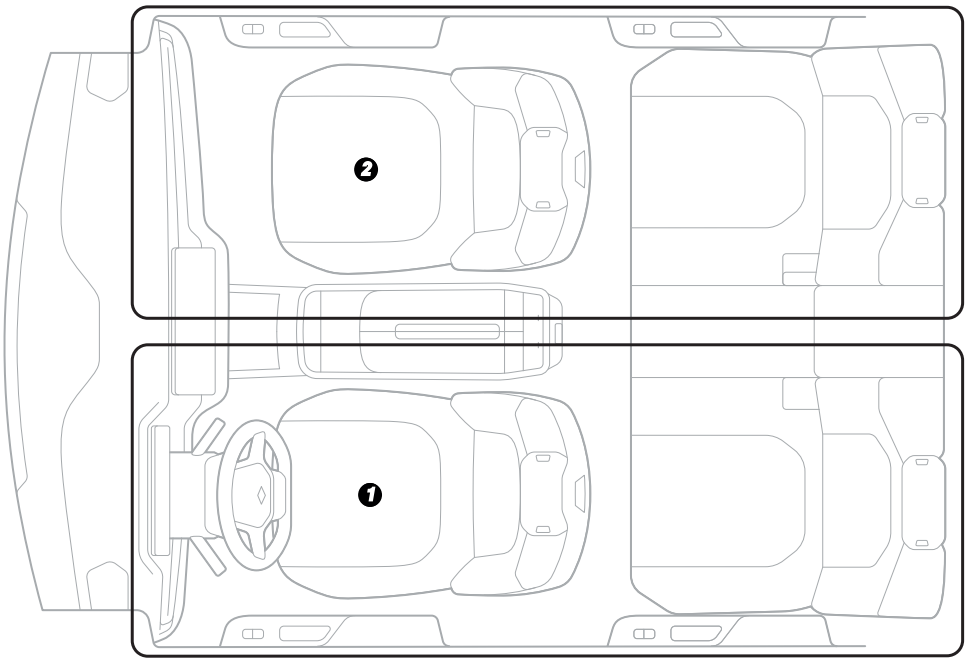

Item	Description
1	Climate zone for driver's side
2	Climate zone for front passenger's side

For more settings, choose the **Fan** button or choose **Settings** from the menu on the center display.

Control the climate in the rear cabin with the center or rear display.

To turn on climate preconditioning or set the temperature before you enter the vehicle, use the Rivian mobile app.

NOTE

While parked, the vehicle may make sounds during any of these conditions:

- Climate preconditioning
- Vehicle charging
- Installation of a software update
- Battery conditioning (heating or cooling) in extreme weather
- Protection of the displays or vehicle against overheating

CHANGE CLIMATE SETTINGS ON THE CENTER DISPLAY

The table below describes the primary climate controls that appear at the bottom of the center display.

Icon	Name	Description
	Decrease temperature	Decrease the temperature. Choose and hold the blue **Decrease Temperature** button to decrease the temperature to Low.
	Fan	The vehicle displays the current temperature and climate status next to this icon. Choose the **Fan** button to access additional climate controls.
	Increase temperature	Increase the temperature. Choose and hold the red **Increase Temperature** button to increase the temperature to High.
	Seat climate	Heat or ventilate the seat.
	Front defrost	Clear the front windshield.
	Rear defrost	Clear the rear window and side mirrors.

CHANGE ADDITIONAL CLIMATE SETTINGS

The Fan button offers additional climate controls, described in the table below.

Icon	Name	Description
	Climate power	Turn on power to the climate controls for the front and rear of the cabin. **NOTE** If you turn off Climate Power, it doesn't affect the seats or steering wheel.
	Pet Comfort	Use Pet Comfort to maintain the cabin temperature for pets after you leave your vehicle.
Front	Front climate	Access the front climate settings.
Back	Back climate	Access the back climate settings.
	Front center and side vents	Choose the **Vent** button to turn on each vent. Choose the **Vent** button and move it to change the direction of the airflow.
	Heated air	The vents blow heated air. 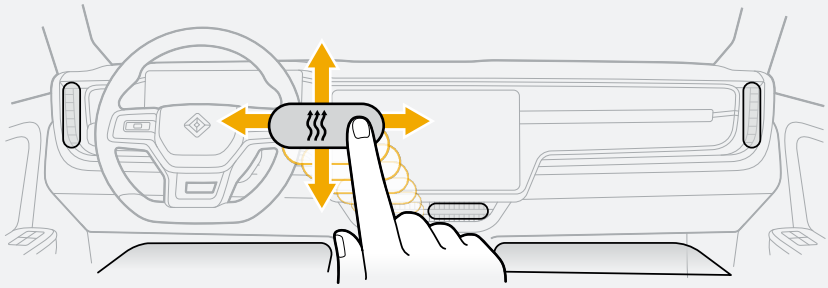
	Cooling air	The vents blow cooling air. 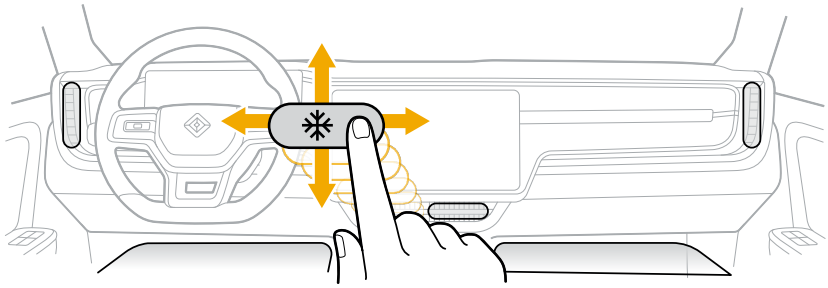

Icon	Name	Description
	Cabin temperature air	The vents blow air at the cabin temperature. (The air won't be heated or cooled.) 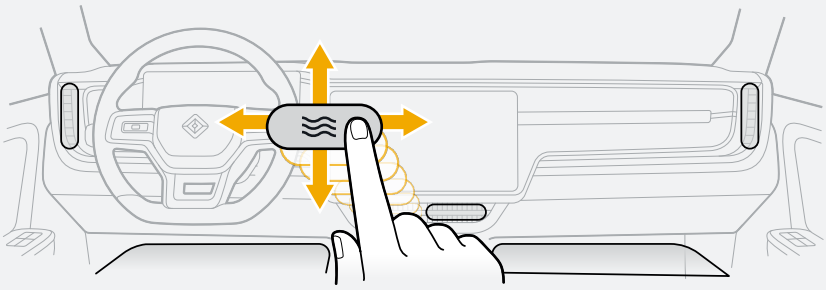
	Front windshield vent	Turn on the front windshield vent. If the temperature settings of the driver-side and front passenger-side zones differ, the front windshield vent blows air at the temperature of the driver-side zone. **NOTE** Choose **Defrost** to defog the front windshield. Choose **Defrost** again to defrost the front windshield. Turning off the front windshield vent shuts off **Defrost** or **Defog**.
	Front foot vents	Turn on both the driver- and passenger-side foot vents.
	Heat steering wheel	Heat the steering wheel for a limited time.
	Heat seat	Heat the seat. Select from three levels of heat.
	Ventilate seat	Ventilate the seat. A ventilated seat recirculates the in-cabin air. Select from three levels of air ventilation.
	Heating, cooling, and conditioning	Turn on **Heating, Cooling, and Conditioning** to have the vehicle heat or cool the air based on the temperature you specify. Turn off **Heating, Cooling, and Conditioning** to have the vehicle only blow air. (The air won't be heated or cooled.) **NOTE** You can turn off Heating, Cooling, and Conditioning in extreme weather to save power.

Icon	Name	Description
AUTO	Auto	Turn on **Auto** to have the vehicle control the vents; fan speed; heating, cooling, and conditioning; and air recirculation to achieve the temperature you specify. Adjust the direction of the airflow from the vents. Auto turns off automatically if you do one of the following: • Change the fan speed. • Turn on **Defrost** or **Defog**. • Turn off **Heating, Cooling, and Conditioning**.
	Air recirculation	Turn on **Air Recirculation** to recirculate the air inside the vehicle. Turn off **Air Recirculation** to allow air from outside into the vehicle.
	Fan	Adjust the fan speed down (-) or up (+).
SYNC	Sync	Turn on **Sync** to make the temperature setting of the front passenger-side zone the same as the temperature setting of the driver-side zone. Turn off **Sync** to allow independent temperature control for the driver- and passenger-side zones.

CHANGE CLIMATE SETTINGS FOR THE REAR CABIN

The Fan button offers climate controls for the rear cabin, described in the table below.

Icon	Name	Description
	Climate power	Turn on power to the climate controls for the front and rear of the cabin. **NOTE** If you turn off Climate Power, it doesn't affect the seats or steering wheel.
Front	Front climate	Access the front climate settings.
Back	Back climate	Access the back climate settings.
	Lock rear display	Lock the rear display so rear-cabin passengers can't adjust the climate settings or control the cabin lights.
	Rear center vents	Choose a **Vent** button to turn on both left and right center vents. Manually adjust either vent to change the direction of the airflow.

Icon	Name	Description
	Rear foot vents	Turn on both left and right foot vents.
	Heat seat	Heat the seat. Select from three levels of heat.

CHANGE CLIMATE SETTINGS ON THE REAR DISPLAY

The rear display offers climate controls for the rear cabin, described in the table below.

Icon	Name	Description
	Fan	The vehicle displays the current temperature next to the icon. • If Sync is turned on, the vehicle uses the temperature setting of the driver-side zone for the cabin of the vehicle. • If Sync is turned off, the vehicle uses the temperature setting of the driver-side zone for the left rear cabin and the temperature setting of the front passenger-side zone for the right rear cabin.
	Rear center vents	Choose a **Vent** button to turn on both left and right center vents. Manually adjust either vent to change the direction of the airflow.
	Climate power	The vehicle displays the current status set on the center display.
	Rear foot vents	Turn on both left and right foot vents. **NOTE** If Auto is turned on, the Vent button isn't available.
	Heat seat	Heat the seat. Select from three levels of heat.

Seat Climate Control

The driver, front passenger, and left and right rear seats can heat. The driver and front passenger seats can ventilate.

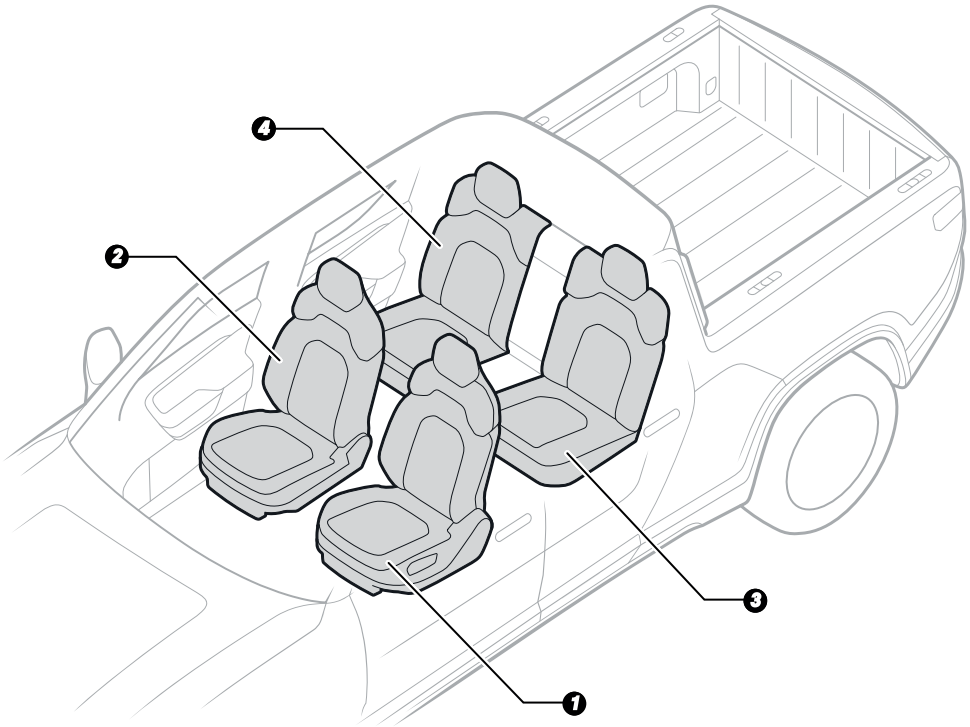

Item	Description
1	Driver seat
2	Front passenger seat
3	Left rear seat
4	Right rear seat

To heat or ventilate seats before you enter the vehicle, use the Rivian mobile app.

CONTROL THE FRONT SEAT CLIMATE SETTINGS

At the bottom of the center display, choose the **Seat Climate** button to change the climate settings of the driver or passenger seat.

Once you activate heat or ventilation, choose the **Seat Climate** button to adjust the levels.

To switch between heat or ventilation, choose the **Fan** button to access the climate settings.

You have the following options:

Icon	Name	Description
	Heat seat	Heat the seat. Select from three levels of heat.
	Ventilate seat	Ventilate the seat. A ventilated seat recirculates the in-cabin air. Select from three levels of air ventilation.

NOTE

The seats have separate controls. If you turn off Climate Power, it doesn't affect the seats.

CONTROL THE REAR SEAT CLIMATES

Use the center or rear display to access the settings to heat the left or right rear seat.

Control the Rear Seat Climates with the Center Display

1. Access the climate settings through the **Fan** button or choose **Settings** from the menu on the center display.
2. Choose **Back**.
3. Choose the **Heat Seat** button .

Icon	Name	Description
	Heat seat	Heat the seat. Select from three levels of heat.

Control the Rear Seat Climates with the Rear Display

On the rear display, choose the **Heat Seat** button .

The seats have separate controls. If you turn off Climate Power, it doesn't affect the seats.

Heated Steering Wheel

The steering wheel offers a heat option.

At the bottom of the center display, choose the **Fan** button and then the **Heat Steering Wheel** button .

Icon	Name	Description
	Heat steering wheel	Heat the steering wheel for a limited time.

To heat the steering wheel before you enter the vehicle, use the Rivian mobile app.

NOTES

- The heat turns off automatically after a period of time.
- The heated steering wheel has a separate control. If you turn off Climate Power, it doesn't affect the heated steering wheel.

Window Defrost

The vehicle offers defrost options for the front windshield and rear window areas, as well as a defog option for the front.

To defrost the windows, choose the **Front Defrost** button or **Rear Defrost** button at the bottom of the center display.

To defrost or defog before you enter the vehicle, use the Rivian mobile app.

DEFROST OR DEFOG THE WINDSHIELD

The vehicle offers the following defrost or defog options:

Icon	Name	Description
	Front defrost	• Choose the **Defrost** button once to turn on defog and clear the front windshield of fogging. A blue icon indicates defog. **NOTE** You can control the temperature and fan speed for defog. However, if you change the vents, you turn off defog. • Choose the **Defrost** button twice to turn on maximum defrost settings and clear the front windshield using heat. A red icon indicates defrost. **NOTE** If you change the vents, fan speed, or temperature during defrost, you turn off defrost. • Choose the **Defrost** button three times to turn off maximum defrost settings. The climate settings return to the previous settings.

DEFROST THE REAR WINDOW AND SIDE MIRRORS

For rear defrost, you have the following option:

Icon	Name	Description
	Rear defrost	Clear the rear window and side mirrors using heat.

Sun Visors

Adjust the sun visors in the following ways:

- Flip up or down
- Rotate outward or inward
- Telescope or slide

With the sun visor in the down position, flip open the cover to use the illuminated vanity mirror.

Pet Comfort

Pet Comfort maintains the cabin temperature so that pets can remain safely and comfortably in your vehicle after you leave. It also disables the interior alarm sensors, which the pet could accidentally activate.

When you close the door to leave, the center display shows the cabin temperature, setting, and information that your pet is comfortable. Passersby can view the center display and know that your pet is safe in your absence.

WARNING

Use only for pets. Never leave a child unattended in the vehicle.

NOTE

The vehicle must be in Park to use Pet Comfort.

PET COMFORT ON THE CENTER DISPLAY

To turn on Pet Comfort:

1. Choose the **Fan** button from the menu on the center display.
2. On the Climate panel, choose the **Pet Comfort** button.
3. Select **Turn On Pet Comfort**. Select **Never Mind** if you decide not to use Pet Comfort.

To turn off Pet Comfort, drive the vehicle or update the setting on the Climate panel.

Pet Comfort disables the window switches after you leave your vehicle. If you open the windows and then turn on Pet Comfort, the windows remain open.

NOTES

- You can turn on Pet Comfort when the battery range is greater than 50 mi (80 km).
- After you turn on Pet Comfort, it stays on until the battery is depleted.
- You must turn off Pet Comfort before you start any software updates.

PET COMFORT IN THE RIVIAN MOBILE APP

Use the Rivian mobile app to monitor Pet Comfort when you're away from your vehicle. The app displays the Pet Comfort screen with the current cabin temperature on your phone.

Download the app from the App Store® online store or on Google Play®.

When Pet Comfort is active, this affects the app as follows:

- Cabin preconditioning isn't available.
- Access to doors and openings is available, and you can vent the windows.

The vehicle communicates Pet Comfort issues through the app, push notifications, and text messages.

If the vehicle detects an issue with its climate system or an extreme temperature for a period of time:

- When the app is open, it displays an alert.
- When the app is closed, you receive a text message or push notification about the issue if you have opted into one or both communication methods.

If Pet Comfort is active and the vehicle battery is critically low, with 5 mi (8 km) or less of range available, you receive a push notification.

Audio and Phone

PHONE

Bluetooth Pairing

Your vehicle uses *Bluetooth*® to connect to phones.

CONNECT TO A PHONE VIA BLUETOOTH

To pair your phone with your vehicle:

1. Choose **Bluetooth** to enable the vehicle to search for available phones.
2. Choose **Add** to pair a new phone via Bluetooth.
3. On your phone, go to the Bluetooth settings.
4. On the center display, choose **Next**.
5. When the center display lists your phone, choose your phone.
6. Confirm that the device code on your phone matches the device code on the center display.
7. On your phone, choose **Pair**.

After pairing, the vehicle saves its connection to your phone. You don't have to pair your phone again.

BLUETOOTH SETTINGS

Access Bluetooth settings through the following:

- **Bluetooth**
- **Media**, **Phone**, and **Settings** apps from the menu on the center display

If you have a saved phone that you want to remove, choose **More** and then choose **Forget Device**.

Cellular Connectivity

The vehicle can provide the following when it has cellular connectivity:

- Maps and navigation
- Entertainment
- Live traffic updates
- In-vehicle Wi-Fi® hotspot
- Remote connection with the Rivian mobile app
- SOS or emergency calls

NOTES

- Cellular connectivity is subject to network and carrier service availability.
- Cellular data features require a data subscription. Subscription charges may apply. To learn about the services that are included with the vehicle, check your Rivian account at rivian.com/account.

WI-FI HOTSPOT

To have internet access in the vehicle, activate the Wi-Fi hotspot through your Rivian account at rivian.com/account.

To deactivate the Wi-Fi hotspot, contact Rivian.

Use the Wi-Fi Hotspot

Control the Wi-Fi hotspot and access its settings through the following:

- Wi-Fi Hotspot icon in the status bar on the center display
- Settings app on the center display

The Wi-Fi hotspot icon indicates the status of the Wi-Fi hotspot.

Icon	Description
	The Wi-Fi hotspot is turned on.
	The Wi-Fi hotspot is turned off.

1. Choose the **Wi-Fi Hotspot** icon, or go to **Settings** › **Connect** › **Hotspot**.
2. Turn **Hotspot** on or off.

If the hotspot is turned on, view the password, the hotspot name, and the number of connected devices on the center display. On the device you wish to connect to the Wi-Fi hotspot, follow these instructions:

1. Go to the Wi-Fi settings.
2. Select the name of the hotspot.
3. Enter the password displayed on the center display.
4. Choose **Join**.

NOTES

- If your devices lose connection to the Wi-Fi hotspot, check the center display for more information.
- The vehicle automatically turns off the Wi-Fi hotspot when you exit the vehicle.
- The Wi-Fi hotspot is available only when the vehicle has LTE connectivity. If the vehicle loses LTE connectivity, it automatically turns off the Wi-Fi hotspot.

Change the Name of the Wi-Fi Hotspot

1. Access the Wi-Fi hotspot settings through one of the following:
   - Choose the **Wi-Fi Hotspot** icon and then choose **Settings**.
   - Go to **Settings** › **Connect** › **Hotspot**.
2. Choose the hotspot name and password.
3. Choose **Rename Hotspot**.
4. Enter the new name.
5. Choose **Save**.

Change the Password of the Wi-Fi Hotspot

1. Access the Wi-Fi hotspot settings through one of the following:
   - Choose the **Wi-Fi Hotspot** icon and then choose **Settings**.
   - Go to **Settings** › **Connect** › **Hotspot**.
2. Choose the hotspot name and password.
3. Choose **Change Password**.
4. Enter the new password.

   NOTE

   Choose the **Show** icon to view the password.

5. Choose **Save**.

NOTE

Cellular service is supported in certain countries. If the vehicle roams outside of its coverage plan area, cellular service may be unavailable or available for a certain period of time only. Check your Rivian account for messages.

Wi-Fi Connectivity

The vehicle uses a Wi-Fi® connection to do various tasks, including the following:

- Download Over the Air (OTA) software updates for the vehicle.
- Connect remotely to the Rivian mobile app.
- Access the map and search for locations.
- Stream from the available media options.

Wi-Fi connectivity is only available when the vehicle is parked. If you shift the vehicle out of Park, the vehicle disables Wi-Fi connectivity.

CONNECT TO A WI-FI NETWORK

1. Search for available Wi-Fi networks through one of the following:
   - Choose the **Wi-Fi** icon in the status bar on the center display.
   - Go to **Settings** › **Connect** › **Wi-Fi** on the center display.
2. When the vehicle displays a list of available Wi-Fi networks, choose the network you want to join.
3. If the network requires a password, enter it using the keyboard that appears on the center display.

   > **NOTE**
   > Your vehicle automatically saves the password so you won't have to enter it again.

4. If the network you want isn't listed, access the Wi-Fi settings.

ACCESS WI-FI SETTINGS

Access the Wi-Fi settings through one of the following:

- Choose the **Wi-Fi** icon and then choose **Settings**.
- Go to **Settings** › **Connect** › **Wi-Fi**.

If you have a saved Wi-Fi network, you can select that network to automatically join it. You can also find a network or remove any network you no longer want to save.

> **CAUTION**
> The vehicle doesn't display a lock icon next to an unsecured network; this indicates the network may be a security risk. Ensure you connect the vehicle to a secured network.

Find a Wi-Fi Network

1. Choose **Find Network**.
2. Enter the network name.

> **NOTE**
> The network name is case-sensitive.

3. Choose **Next**.
4. Enter the password.

> **NOTES**
> - The password is case-sensitive.
> - Choose the **Show** button to view the password.

5. Choose **Join**.

> **NOTES**
> - Ensure your router or extender uses Wi-Fi Protected Access 2-Advanced Encryption Standard (WPA2-AES) encryption for wireless security. The vehicle doesn't support Temporal Key Integrity Protocol (TKIP) or Wired Equivalent Privacy (WEP) encryption so it won't show or connect to networks using TKIP or WEP.
> - Ensure the Wi-Fi network doesn't use a captive portal, which is used by some cafes or hotels to manage Wi-Fi access. The vehicle may initially connect but it won't support internet access through a captive portal. If you've previously saved a captive portal network, remove it from the list of saved networks to prevent an automatic connection.

Remove a Saved Wi-Fi Network

1. Choose **Manage Networks**.
2. Choose the **Delete** button to immediately delete a saved Wi-Fi network.
3. Choose **Remove**.
4. Choose **Done**.

Phone Call

To manage phone calls, pair your phone to your vehicle via Bluetooth.

To adjust the volume, use the **Volume** button at the bottom of the center display or scroll the left thumb control on the steering wheel.

MAKE A CALL

Choose **Phone** from the menu on the center display. You can make a call using any of the following options:

- **Favorites:** Choose the **Favorites** icon to access a list of your favorite contacts.
- **Recent Calls:** Choose the **Recent Calls** icon to access a list of your recent phone calls.
- **Contacts:** Choose the **Contacts** icon to access a list of your contacts.
- **Keypad:** Choose the **Keypad** icon to display a keypad and dial a phone number.

  As you dial a phone number, contacts may appear. You can choose a contact to call.

NOTES

- If Alexa is active, you can use Alexa to make a call.
- Support for conference or parallel calls may vary, depending on your specific phone and cellular network.

RECEIVE OR MANAGE ACTIVE CALLS

To receive or decline an incoming call, use the center display or the multi-functional thumb control on the left side of the steering wheel.

To manage active phone calls, use the panel on the center display. The top of the panel lists the active calls.

The table below describes the phone controls that can appear on the center display.

Icon	Name	Description
	Call	• Make a call. • Accept an incoming call.
	End Call	• End the current call. • Reject and send an incoming call to voicemail. • If you have a merged call, you can end each call separately.
	Mute	Mute your microphone.
	End and Accept	If you have an incoming call, end the current call and accept the incoming call.
(no icon)	Switch Calls	If you have more than one active call, switch between calls at the top of the panel.
	Merge	If you have more than one active call, you can merge them.
	Keypad	On an active call, choose the **Keypad** icon at the bottom of the panel to respond to an automated phone system.

MAKE SOS OR EMERGENCY CALLS

SOS or emergency calls don't require the phone to be paired to the vehicle using Bluetooth. See Emergency SOS.

Smartphone Integration

When you pair your phone to your vehicle using Bluetooth, you can choose to grant access to the following:

- **Phone Calls:** Use the center display to make or receive phone calls.
- **Contacts:** Use the center display to access your list of contacts.
- **Media Audio:** Stream audio, such as music or podcasts, from your phone to the vehicle.

Choose **Phone** from the menu on the center display to access the following:

- **Favorites:** Choose the **Favorites** icon to access a list of your favorite contacts.
- **Recent Calls:** Choose the **Recent Calls** icon to access a list of your recent phone calls.
- **Contacts:** Choose the **Contacts** icon to access a list of your contacts.
- **Keypad:** Choose the **Keypad** icon to display a keypad and dial phone numbers.
- **Switch Devices:** Choose the **Switch Devices** icon to display a list of previously connected devices. Choose the device you want to switch to, or choose **Bluetooth** to access the Bluetooth settings.

FAVORITES

The center display lists your favorite contacts.

Choose a favorite contact to make an immediate call and display contact information.

> **NOTE**
> Use your phone, not the center display, to designate a contact as a favorite.

RECENT CALLS

The center display lists the following:

- Calls from the call history of the connected phone
- Calls you've made using the keypad from the center display

The **Outgoing Call** icon appears in front of any calls you made.

Access each recent call as follows:

- Choose the contact or phone number, if available, to make an immediate call.
- Choose the **Information** icon to display contact information, if available.

CONTACTS

To manage your contacts:

1. Search for a contact or select a letter from the alphabet column.

> **NOTES**
> - Choose **Search for contacts** to display a keyboard.
> - Choose the **Sort** icon to sort the contacts by first or last name.

2. Select a contact.
3. The center display lists the available contact information, which includes phone numbers, addresses, and email addresses. Choose a phone number to make an immediate call.

> **NOTES**
> - Use your phone, not the center display, to add a contact.
> - If **Contacts** is turned off, access your phone and allow it to share your contacts.

MEDIA AUDIO

Stream audio, such as music or podcasts, from your phone to the vehicle. Choose the media source on your phone.

Rivian Account

The Rivian account is your digital profile. You can use your Rivian account to do the following:

- Add authorized drivers.
- Assign keys to drivers.
- Personalize driver seat position, steering wheel, mirror, and media presets.

Unlocking the vehicle with a phone key, key fob, key card, or key band loads the personalized presets for the profile associated with that key.

> **NOTES**
> - Automatic seat and steering wheel adjustments are available when the vehicle is in Park.
> - Press any steering wheel control button to stop automatic adjustments in progress.

Rivian Mobile App

The Rivian mobile app is the primary key to your vehicle and offers several options, including the following:

- Add a phone to act as a key.
- Manage the driver profiles authorized to access your vehicle.

- Find a charging location.
- Start a charging session.
- Share an address from your phone to the vehicle.
- Remotely monitor the vehicle.
- Schedule vehicle service.

After you have added a phone to act as a key, you have the following options:

- Lock or unlock vehicle doors.
- Turn on climate preconditioning or set the temperature before you enter the vehicle.

Download the app from the App Store® online store or on Google Play®.

USE YOUR PHONE AS A KEY

When you accept delivery of your vehicle, your Rivian account is designated as the primary owner of the vehicle. Check the app for additional information to set up your phone as a key.

> **NOTE**
> If you are a driver of more than one Rivian vehicle, select your desired vehicle in the Rivian mobile app before you use the phone as a key.

MANAGE DRIVERS AND KEYS

Use the app to invite family members or friends to be authorized drivers of your vehicle.

- **Primary Owner:** A primary owner has all administrator rights and can't be changed unless someone else becomes the owner of the vehicle.
- **Driver:** A driver has no administrator rights but can access and drive the vehicle. The driver can also set up a phone as a key.

ADD A NEW DRIVER AND PHONE

Use the app to add a new driver.

Any new driver must have a Rivian account. If a new driver doesn't have an account, we send an email to request that they set up a Rivian account.

After you set up the new driver profile and the new driver establishes a Rivian account, the new driver should do the following:

1. Download the app and follow the instructions.
2. Enter the vehicle and check the center display for additional information needed to set up the phone as a key.

NOTES

- If you remove a driver, you can remove that driver's phone key from your vehicle.
- To remove a physical key, such as a key fob or key card, from your vehicle for security purposes, contact Rivian.

Software Updates

When a software update becomes available for your vehicle or key fob, you can obtain the update over a Wi-Fi® or cellular connection.

SOFTWARE

The vehicle notifies you about software updates. You can choose **Settings** from the menu on the center display to access the software settings. Choose **Vehicle**, and then choose **Updates**.

Available Software Update for Your Vehicle

When a software update is available for your vehicle, the vehicle provides status information, such as the following:

- Version number of the software update
- Estimated time the software update will take
- Percentage of the download completed, if a download is in progress

IMPORTANT

Before you update the software for your vehicle, do the following:

- Park the vehicle.
- Ensure the battery is sufficiently charged.
- Ensure that the vehicle isn't connected to a DC fast charger.
- Ensure all passengers exit the vehicle.

You can choose **See What's New** to read the update details, or choose **Update Now** to start the software update.

CAUTION

While your vehicle updates the software, don't touch the pedals or buttons. Otherwise this may interrupt the update and disable the vehicle.

The vehicle won't update the software if the Vehicle Shipping or Tire Change mode is turned on, or if the vehicle is leveled.

Storage access, locking, and security features are unavailable while the vehicle updates the software.

If the vehicle doesn't complete the software update, check the center display for additional information.

Available Software Update for Your Key Fob

You can improve the functionality of your key fob by updating its software. When a software update is available for your key fob, the vehicle provides status information, such as the estimated time the software update will take.

IMPORTANT

Before you update the software for your key fob, do the following:

- Park the vehicle.
- Ensure that you have an extra key with you as a backup. The key fob won't work while it updates the software.

You can choose **Update Now** to start the software update.

CAUTION

While your key fob updates the software, keep it in the vehicle.

If the key fob doesn't complete the software update, check the center display for additional information.

AUDIO

Sound System

The sound system delivers surround sound from speakers throughout the cabin.

If you open a door from the inside when the sound system is on, the volume is lowered by 8 dB. The volume level returns to normal when the door is closed if a passenger is in the vehicle.

NOTE

You can use the Rivian Camp Speaker (if available) to stream music from a device with *Bluetooth*® technology.

ADJUST THE VOLUME

You can set different volume levels for various audio sources, including media, phone calls, voice navigation, and Alexa. To adjust the volume of the audio source that's currently active, do one of the following:

- Scroll the left thumb control on the steering wheel.
- Choose **Volume** at the bottom of the center display. Adjust the volume for the audio source that is currently active. You can choose **Mute** to mute all audio sources.

WARNING

Playing the sound system at high volumes can cause hearing damage.

To adjust the volume for other audio sources:

1. Choose **Volume** at the bottom of the center display to access the volume control for the audio source that's currently active. To access the volume controls for all audio sources, choose the icon of the active audio source above the volume control.
2. Adjust the volume for any audio source. You can choose **Mute** to mute all audio sources.

ADJUST OTHER AUDIO SETTINGS

To access the following controls, choose **Media** from the menu on the center display. Then choose **Audio Settings**.

Change the Fade and Balance

Fade indicates how much sound the vehicle sends to the back cabin versus the front. Balance indicates how much sound the vehicle sends to the left or right sides of the cabin. You can adjust the fade and balance separately. Choose **Reset** to reset fade and balance to the default settings (both values to center).

Change the Equalizer Settings

Adjust the volume levels of the frequency bands to fine-tune the sound. Choose **Reset** to reset all equalizer (EQ) controls to the default settings (all values set to 0).

To use an equalizer preset, choose **More** and select one of the available presets.

Change the Soundstage Center

If your vehicle is equipped with the Soundstage Center setting, control where the audio focuses. Choose **Reset** to reset the focus to the default setting.

Change the 3D Surround Sound

Control the depth of immersion experienced in the surround sound field by the driver and passengers.

Change the Dynamic Sound Adjustment

The sound system automatically raises or lowers the volume based on the vehicle's speed to keep the loudness consistent for the driver and passengers. Control how the vehicle adjusts the volume level based on driving conditions.

Media Options

You can choose from several media sources, including FM or HD Radio™, Spotify®, TIDAL®, and TuneIn®. You can also pair to a device with *Bluetooth*® technology and adjust the audio settings.

1. Choose **Media** on the menu from the center display.
2. Select a media source on the left.

RADIO

1. Choose the **Radio** icon to listen to FM or HD Radio.
2. Choose from available stations with the tuner or keypad. You can save stations to your account by tapping the heart icon.

> **NOTE**
> The HD Radio logo HD Radio lights up when you enable HD Radio.

SPOTIFY

> **NOTE**
> You must log in the first time you use the app.

1. Choose the **Spotify** icon.
2. Open your account on your phone or other device.

   > **NOTE**
   > Your vehicle must be in Park and have cellular or Wi-Fi connectivity.

3. Scan the QR code to sign in.

Spotify Queue

View the queue with the **Queue** icon. To add tracks to the queue, open a playlist or album and choose **Add to Queue** next to a track. You can remove tracks from the queue.

TIDAL

> **NOTE**
> You must log into a paid account the first time you use the app.

1. Choose the **TIDAL** icon.
2. Open your account on your phone or other device.

   > **NOTE**
   > Your vehicle must be in Park and have cellular or Wi-Fi connectivity.

3. Enter the code on your device to sign in.

TIDAL Queue

View the queue with the **Queue** icon.

TUNEIN

> **NOTE**
> No login is required.

1. Choose the **TuneIn** icon.
2. Select a station to hear it.
3. Touch **Home** to view all available stations.
4. Choose **Recents**, **Favorites**, **Browse**, or **Search** to narrow the selections.

BLUETOOTH

1. Choose the **Bluetooth pairing** icon.
2. Follow the Bluetooth pairing instructions.

OTHER MEDIA

To listen to Amazon Music, ask Alexa to play it.

For SiriusXM®, use Bluetooth to stream it from your device.

ALEXA

Overview and Setup

Alexa supports basic vehicle controls and media, even if you don't have an Amazon account. Choose the **Try Alexa** option on the center display during vehicle onboarding and agree to the Terms and Conditions to sample preview mode.

Activate Alexa to use your voice to control nearly anything managed by the center display. For a fully personalized experience and more Alexa capabilities, log into your Amazon account by following these steps on the center display:

1. Go to Settings ⚙.
2. Choose **Apps**.
3. Choose **Alexa**.

> **NOTE**
> Your car must be parked and be connected to the internet in order to go through the sign-in process.

Once logged in, you can do the following by using Alexa:

- Access your calendar.
- Call contacts by name.

- Communicate with any Alexa home device.

Call on Alexa by saying the wake word, "Alexa." A voice chrome bar appears below the status bar on the center display when Alexa is active to indicate when Alexa listens, thinks, or speaks. Voice chrome is a visual indicator of Alexa's attention system.

Say, "Alexa, stop" at any time to cancel a command. You can also tap on the Alexa voice chrome bar to immediately end your interaction with Alexa.

> **NOTES**
> - You can sign out of your Amazon account at any time through the Settings menu on the center display.
> - Visit Amazon's websites to learn more about how Alexa uses your personal information:
> - www.amazon.com/alexaterms
> - www.amazon.com/privacy

OPT OUT

You can choose not to use Alexa by remaining signed out and not enabling preview mode through **Try Alexa**.

Disable Wake Word

Alexa is the only supported voice service in Rivian vehicles. To disable the wake word, "Alexa," on the center display, do one of the following:

- To open the Alexa panel, choose the Alexa icon at the top left of the status bar.
- Go to **Settings**. Choose **Apps**, and then choose **Alexa**.

Once you disable the wake word, you can speak a command by long-pressing the left thumb control on the steering wheel.

If you enable the wake word, the active Alexa icon appears at the top left of the status bar on the center display. If you disable the wake word, the mute icon appears.

Things You Can Ask Alexa

You can ask Alexa to perform a variety of commands, including the following.

Category	Sample Commands
Car Controls	“Alexa, open/close the hood/front trunk.” “Alexa, open/close the charge door.” “Alexa, turn on/off the rear light.” “Alexa, turn on/off the front reading light.” “Alexa, set the screen brightness to low/medium/high.” “Alexa, turn on/off the ambient light/lighting.” “Alexa, set the ambient light/lighting to low/medium/max.”
Climate and Comfort	“Alexa, set the temperature to 70.” “Alexa, set the driver/passenger temperature to 70.” “Alexa, turn on/off the air conditioning.” “Alexa, turn on/off the steering wheel heat.” “Alexa, turn on/off the driver's/passenger's seat heat.” “Alexa, set the driver's/passenger's seat heat to low/medium/high.” “Alexa, turn on/off climate sync.” “Alexa, turn on/off the front/rear defrost.” “Alexa, turn on/off air recirculation.” “Alexa, set the temperature to low/min/medium/max/high.” “Alexa, turn on/off the fan.” “Alexa, set the fan to min/medium/max.” “Alexa, turn on/off the vents.” “Alexa, turn on/off the driver/passenger vent.” “Alexa, set the front/rear vents to floor/body.”

Category	Sample Commands
Media and Music	"Alexa, mute/unmute/pause/resume." "Alexa, turn up/down volume." "Alexa, play music." "Alexa, play ‹artist/playlist/track› on Spotify." "Alexa, play Amazon Music/Spotify/iHeart Radio/Kindle/Audible/TuneIn/Pandora."
Navigation and Charging	"Alexa, navigate to SFO." "Alexa, search nearby coffee shop." "Alexa, search nearby charging stations." "Alexa, how's my commute to work?" "Alexa, what's my ETA?"
Phone and Communication	"Alexa, call Mom." "Alexa, hang up."
Alexa Skills	"Alexa, what's the weather?" "Alexa, who's Tony Stark?" "Alexa, play Song Quiz."
Personal Assistance	"Alexa, add [item] to my shopping list." "Alexa, add [item] to my to-do list." "Alexa, add [event] to my calendar."

NOTES

- For safety reasons, some commands require your vehicle to be parked.
- Certain commands require you to be logged in to your Alexa account.

Alexa constantly learns new commands. Go to the Alexa icon at the top left of the status bar in the center display and choose **More things to try** for phrases that you can try with Alexa. Cycle through different category features to learn about the capabilities of Alexa and the recognized commands. You can also ask, "Alexa, what new skills do you have?"

DEVICE CHARGING

Charge Ports (USB-C)

Several USB-C power outlets are available in the vehicle cabin.

NOTE

- Use the USB-C outlets at the back of the head restraints and below the rear display screen for charging only.
- Use the USB-C outlets within the storage bin of the center console to charge and store data, such as security footage from the Gear Guard.

Wireless Charger

Once you power on your vehicle, you can charge your phone and other rechargeable, battery-operated devices on the high-speed wireless charger located on the upper tray of the center console. Place the phone face-up on the charger to begin charging, aligning the phone against the far left or right side of the charging pad. You'll see an active charging icon on your device if this is a supported feature. Charging times may vary depending on the device, but it takes around 2 to 3 hours to fully charge a depleted phone.

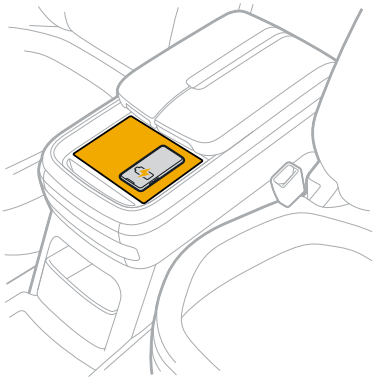

The charger is designed to work with phones encased in most standard phone cases.

NOTE

You may hear a fan noise when the wireless charger cools while it actively charges a device.

While you can charge two phones at the same time, the charging pad is designed to work best simultaneously charging a phone and another small item such as ear buds.

The charging pad has a temperature sensor, and it stops charging if a device or environment is too hot.

CAUTION

To avoid damage to the charging pad, don't put metallic or magnetic objects on the pad. The charging pad is only meant to hold a compatible device with a rechargeable battery, such as a phone. Don't leave items such as NFC or credit cards on the pad. While the charging pad will not damage an NFC card, the presence of a card on the pad can prevent charging.

TROUBLESHOOTING

If This Happens	Try This
Device is too hot	Remove the device from the charger, wait for it to cool down, and try charging again later.
Wireless charger sensor doesn't detect compatible device	• Remove the device from the charger, wait a few seconds, and place the device back on the pad. • Slowly move the device around the charger to find proper positioning for charging.
Device won't charge	• Ensure that the device is a 1.2.4 qi-compatible device (such as iPhone® and Android™ mobile devices, or pair of earbuds). • Place the phone face-up against the far left or right side of the charging pad. • Ensure that there isn't an incompatible object on the charging pad (such as NFC cards, foreign objects, or metal pieces). Remove items such as coins or credit cards from the storage pocket of a phone case. • Respond to any warning on the center display that indicates an unauthorized item on the charging pad.

Driving

BASIC VEHICLE OPERATIONS

Startup and Sleep

The vehicle unlocks its doors and is ready when it detects your approach, or when you unlock it with a key.

After you put the vehicle in Park and walk away, the vehicle locks its doors and goes to sleep.

> **NOTE**
> The vehicle remains ready while it charges and while you sit inside or access the storage areas.

Brakes

REGENERATIVE BRAKING

Regenerative braking happens automatically when you lift your foot off the accelerator pedal. This captures energy and increases range. It also saves wear and tear on the brake pads.

You can choose the following regenerative braking settings from **Drive Modes › Brake Regen** in the center display:

- **Standard:** Moderate regenerative braking. Standard is the default setting for all modes except Snow and Soft Sand modes.
- **High:** Stronger regenerative braking. The vehicle slows down faster and captures more energy.
- **Low:** Limited regenerative braking. Low is the default setting for Snow and Soft Sand modes and is not available in other modes.

The brake lights automatically illuminate during regenerative braking to warn other drivers when the vehicle slows down.

> **NOTE**
> Regenerative braking may be reduced temporarily when the vehicle battery is cold, fully charged, or almost fully charged. Press the brake pedal to slow or stop the vehicle.

ANTI-LOCK BRAKING SYSTEM

The anti-lock braking system prevents the wheels from locking up while you press the brake pedal. This helps you maintain control of the vehicle when stopping suddenly or on slippery or low-grip surfaces.

ELECTRONIC PARK BRAKE

When the vehicle stops, put the vehicle in **Park** to engage the electronic park brake to keep the vehicle from rolling.

Select a Gear

DANGER

- Press the brake pedal and ensure the vehicle is stationary before shifting into Park, Drive, or Reverse.
- Ensure the vehicle is in Park before you exit the vehicle.
- Follow these instructions to avoid personal injury, death, or property damage.

Use the drive stalk on the right side of the steering wheel to select a gear. The driver display shows the current gear.

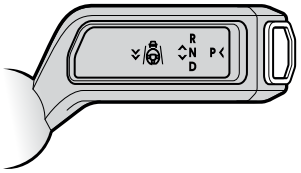

PARK (P)

Push the button on the end of the drive stalk to put the vehicle into **Park.** Ensure the vehicle is completely stopped before shifting into Park.

You cannot shift out of Park under the following conditions:

- A charge cable is connected to the vehicle.
- The brake isn't pressed.
- The driver isn't in the driver's seat.
- The key fob is not in the vehicle.
- An error condition exists. Check for alerts in the driver display.

REVERSE (R)

Push the drive stalk all the way up and then release to put the vehicle into **Reverse.** Ensure the vehicle is completely stopped before shifting into or out of Reverse.

NEUTRAL (N)

Push up the drive stalk to put the vehicle in **Neutral.** The vehicle can roll freely in Neutral after you release the brake.

DANGER

If you want the vehicle to remain in place, press and hold the brake pedal so it doesn't roll.

DRIVE (D)

Push the drive stalk all the way down and then release it to put the vehicle in **Drive.** Stop the vehicle completely before you shift into Drive.

> **NOTE**
>
> Ensure the vehicle is completely stopped before changing direction from Drive to Reverse or Reverse to Drive.

DRIVING CONTROLS

Status Indicators

FUNCTION CHECK

After a restart, the vehicle performs a function check. All status indicators light up for a few seconds when you press the brake or hold the brake to shift out of Park.

Status indicators are often paired with a notification that explains the indicator and may provide some troubleshooting steps. Notifications disappear from the display screens after a set time. You can access the more critical notifications that require attention by choosing the **Notifications** button from the status bar at the top of the screen. A yellow dot on the **Notifications** button indicates that there are active notifications for you to review.

DANGER

If any of the “malfunction” or “system failure” lights stay on or appear after the initial function check, it may be unsafe to operate the vehicle, and the vehicle may not be drivable. Contact Rivian Service to have the vehicle inspected.

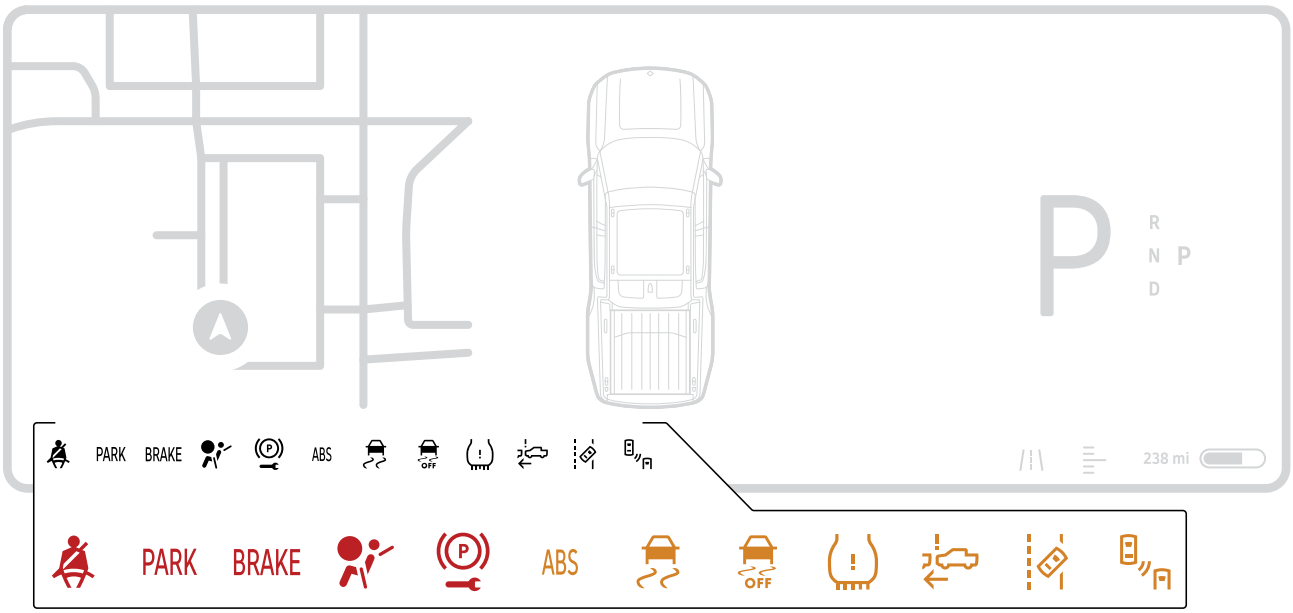

Icon	Name	Description	Location	Active State
ABS	Anti-lock Braking System (ABS) Malfunction	ABS isn't working properly.	Driver Display	Solid Yellow
	Airbag Malfunction	Airbag system isn't working properly.	Driver Display	Solid Red
	Automatic Emergency Braking (AEB)	AEB is turned off or malfunctioning.	Driver Display	Solid Yellow
A	Automatic High Beams	High beam headlights turn on and off automatically for oncoming traffic.	Driver Display	Solid Blue when on Solid Gray when off
	Blind Spot Warning (BSW)	BSW is malfunctioning.	Driver Display	Solid Yellow
BRAKE	Brake System Malfunction	Brake system isn't working properly.	Driver Display	Solid Red
	Door Ajar Indication	One or more vehicle doors aren't fully closed. When this indicator appears, an image shows which doors are open.	Driver Display	Solid Red
	Electronic Stability Control (ESC) System On	ESC system is active, improving traction by providing anti-skid support.	Driver Display	Flashing Yellow
	Electronic Stability Control (ESC) System Malfunction	ESC system isn't working properly.	Driver Display	Solid Yellow
OFF	Electronic Stability Control (ESC) System Off	ESC system has been turned off.	Driver Display	Solid Yellow

Icon	Name	Description	Location	Active State
	Forward Collision Warning (FCW)	FCW is malfunctioning.	Driver Display	Solid Yellow
	Front Fog Lamps	Front fog lamps are on.	Driver Display	Solid Green
	High Beams	High beam headlights are on.	Driver Display	Solid Blue
	Hood Ajar Indication	Hood isn't fully closed.	Driver Display	Solid Red
	Lane Departure Warning (LDW)	LDW is malfunctioning.	Driver Display	Solid Yellow
	Lighting Malfunction	One or more of these lights is out: • Low Beams • High Beams • Turn Indicators • Rear Fogs • Front Fogs • Stop Lamps • Parking Lamps	Driver Display	Solid Yellow
	Limited Performance Mode	Vehicle drive power is limited.	Driver Display	Solid Yellow

Icon	Name	Description	Location	Active State
	Low Battery Warning	The vehicle's calculated range is low: • Yellow = 50 mi (80 km) remaining • Red = 5 to 30 mi (10 to 50 km) remaining	Driver Display	Solid Yellow or Solid Red
	Low Beams On	Low beam headlights are on.	Driver Display	Solid Green
	Low Tire Pressure	One or more tires have low tire pressure.	Driver Display	Solid Yellow
	Marker Lamps	Vehicle lighting system is on, specifically marker lighting.	Driver Display	Solid Green
PARK	Parking Brake On	Parking brake is on.	Driver Display	Solid Red
	Parking Brake System Malfunction	Parking brake system isn't working properly.	Driver Display	Flashing Red
PASSENGER AIRBAG OFF	Passenger Airbag Off	Passenger airbag system is disabled.	Center Display	Solid Yellow
PASSENGER AIRBAG ON	Passenger Airbag On	Passenger airbag system is on.	Center Display	Solid Yellow

Icon	Name	Description	Location	Active State
R N P D	PRND	Indicates which gear the vehicle is in: P (Park), R (Reverse), D (Drive), N (Neutral). (Active State color varies, depending on day or night mode)	Driver Display	Solid
	Rear Fog Lamps	Rear fog lamps are on.	Driver Display	Solid Yellow
	Rear Window Defrost/Defog	Rear window defrost/defog is on.	Center Display	Solid Red when on Solid White when off
	Seat Belt Reminder	Driver and/or front passenger seat belt isn't fastened.	Driver Display	Solid or Flashing Red
	System Failure	One or more system failures.	Driver Display	Solid Red
	Tailgate Open	Tailgate isn't fully latched.	Driver Display	Solid Red
	Tire Pressure Monitoring System (TPMS) Malfunction	TPMS system is malfunctioning.	Driver Display	Flashing Yellow
	Turn Indicators	Turn signal is on in one direction (one flashing indicator), or hazard lights are on (both flashing simultaneously). Fast flashing indicates that a bulb is out.	Driver Display	Flashing Green

Icon	Name	Description	Location	Active State
	Vehicle Hold	Vehicle automatically stays still without applying the brake. (Active State color varies, depending on day or night mode)	Driver Display	Solid
	Windshield Defrost/Defog	Windshield defrost/defog is on.	Center Display	Solid Red when defrost on Solid Blue when defog on Solid White when off
	Windshield Washer Fluid Low	Windshield washer fluid is low.	Driver Display	Solid Yellow

Steering Wheel Controls

HORN

Press the Rivian logo at the center hub of the steering wheel to honk the horn. The horn can function even when the vehicle is powered off.

STALKS

Locate the drive stalk to the right of the steering column. Use it to select a gear, set cruise control, and select Driver+ features.

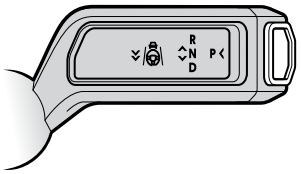

Locate the lights stalk to the left of the steering column. Use it to control the lights, high beams, turn signals, and windshield wipers.

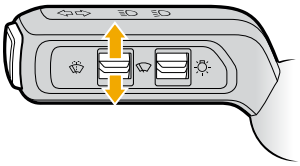

THUMB CONTROLS

Locate the two multi-functional thumb controls on the left and right sides of the steering wheel. Their behaviors are contextual, depending on the screen you view. For example, you can use the thumb controls to scroll among and select items on the display. Press the left and right thumb control buttons to either side of the scroller to execute certain actions.

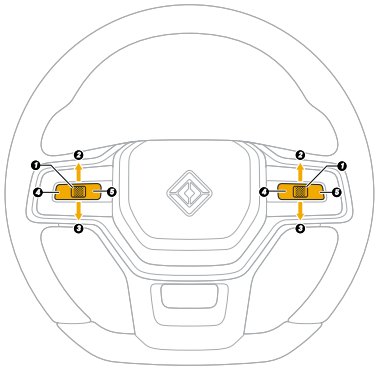

Use the left thumb control for audio, media, phone, and Alexa. Use the right thumb control for Driver+ features.

> **NOTE**
> On the left side of the steering wheel, long-press the left or right thumb control buttons (4 and 5) to cycle through the efficiency graph, tire pressure displays, and navigation map on the driver display.

Adjust the Steering Wheel

Use the Driver Profile button at the top of the center display to adjust the steering wheel. The left thumb control adjusts the reach, and the right thumb control adjusts the height.

Thumb Control	Action	Result
Left	Scroll up	Move steering wheel away
Left	Scroll down	Move steering wheel closer
Right	Scroll up	Raise steering wheel
Right	Scroll down	Lower steering wheel

- Choose **Remember** on the center display to keep your settings as part of your driver profile.
- Choose **Restore** to return the steering wheel to the last saved position.

Media Controls

You can use the left controls in the following ways while *Bluetooth*® or Alexa audio sources play.

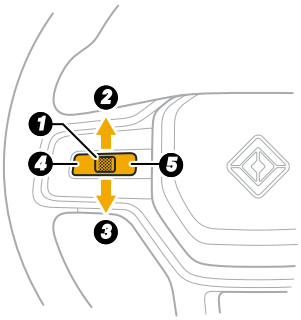

Item	Action	Description
1	Press thumb control	Play/Pause
1	Long-press thumb control	Evoke Alexa
2	Scroll up	Increase volume
3	Scroll down	Decrease volume
4	Press left thumb control button	• Previous track • Skip backward a few seconds for some media service providers*
5	Press right thumb control button	• Next track • Skip forward a few seconds for some media service providers*

* Number of seconds depends on the media service provider.

FM Radio

Use the left controls for FM radio in the following ways.

Item	Action	Description
1	Press thumb control	Mute/Unmute
1	Long-press thumb control	Evoke Alexa
2	Scroll up	Increase volume
3	Scroll down	Decrease volume
4	Press left thumb control button	• Previous local FM station • Previous favorite station if currently playing from your favorites list
5	Press right thumb control button	• Next local FM station • Next favorite station if currently playing from your favorites list

Phone Controls

When you receive an incoming call or are on an active call, panels appear in both the driver and center displays. You can manage phone calls on the center display, or with the left controls as described below.

Item	Action	Description
Incoming Call		
1	Press thumb control	Performs the highlighted action
1	Long-press thumb control	No action
2	Scroll up	Highlight top option in incoming call panel (accept)
3	Scroll down	Highlight bottom option in incoming call panel (decline)
4	Press left thumb control button	No action
5	Press right thumb control button	No action
Active Call		
1	Press thumb control	Hang up
1	Long-press thumb control	Evoke Alexa
2	Scroll up	Increase call volume
3	Scroll down	Decrease call volume
4	Press left thumb control button	No action
5	Press right thumb control button	No action

Display Screens

DRIVER DISPLAY

The driver display is located behind the steering wheel. It isn't a touch screen. It displays information relevant to the driver, such as the driving speed and current gear.

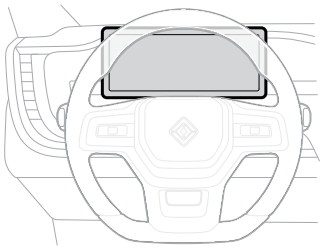

CENTER DISPLAY

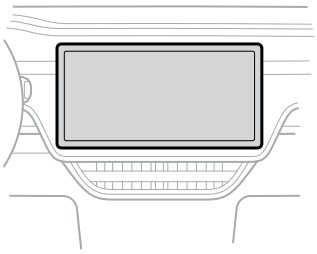

The center display is a touch screen located at the center of the instrument panel.

To set your screen brightness to automatically adjust to ambient light, do the following:

1. From the app tray at the bottom of the center display, choose **Vehicle › Lighting and displays**.
2. In the Displays section, choose **Auto** next to the brightness slider.
3. With Auto turned on, use the brightness slider to manually adjust the brightness level with an offset relative to the ambient light. The brightness level continues to automatically adjust, with your offset, until you turn off Auto.

App Launcher

The app launcher is located at the bottom-center of the center display.

- Choose any app in the tray or expanded menu to launch it.
- Swipe the app tray handle up or down to show or hide the expanded app menu. You can also tap the area above the expanded app menu to collapse it.

For quick access to your favorites, you can customize which apps appear in the tray, and in what order, by doing the following:

- Press-and-hold a favorite in the app tray and drag it to another slot to reorder.
- From the expanded app menu, press-and-hold an app and drag it down to one of the slots in the app tray to replace an existing favorite.

With the expanded app menu exposed, you can drag a favorite app from the tray up to the expanded menu to reduce the number of favorite slots.

NOTES

- The vehicle must be in Park for you to change the app ordering.
- The right-most app in the tray is your most recently used app that isn't already saved as a favorite.
- New apps appear in the expanded app menu with a dot next to them.

REAR DISPLAY

The rear display is a touch screen located at the back of the center console. It shows the settings for passengers in the second row to control the heating and air conditioning for the rear seats.

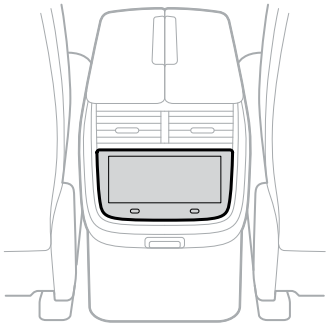

WARNING

If the center display becomes too hot to touch, it alerts you with a message. This can occur when the vehicle cabin temperature rises. Wait until the screen cools before touching the center display.

Display Settings

You can customize the time format and units of measure settings on the center display.

TIME FORMAT

1. From the center display, choose **Settings › Vehicle › Units**.
2. Select **12-hour** or **24-hour**.

UNITS OF MEASURE

From the center display, choose **Settings › Vehicle › Units**. You can select **Imperial**, **Metric**, or **Custom** to show a mix of both.

Power Gauge

Power gauge shows the power currently used to accelerate the vehicle, and the overall power available. It communicates any restriction in propulsion or regenerative braking. It may also show a propulsion limitation when the battery is low. The power gauge appears on the driver display after you select the Drive gear. Various vehicle systems, environmental conditions, or any faults that impact propulsion or regenerative braking may limit propulsion or regenerative braking. Different icons appear or disappear based on the conditions described below.

Icon	Name	Description
	Snowflake	The snowflake appears with a unique notification because of cold weather impact. Low temperature may limit propulsion or regenerative braking.
	Telltale	The regenerative braking telltale appears when regenerative braking may be limited. Regenerative braking may feel limited at higher speeds, but not be very noticeable. The capability returns as the level of charge decreases.
	Green leaf	The green leaf appears because of reduced propulsion when you're in Conserve mode.

Below are the different display scenarios based on display priority.

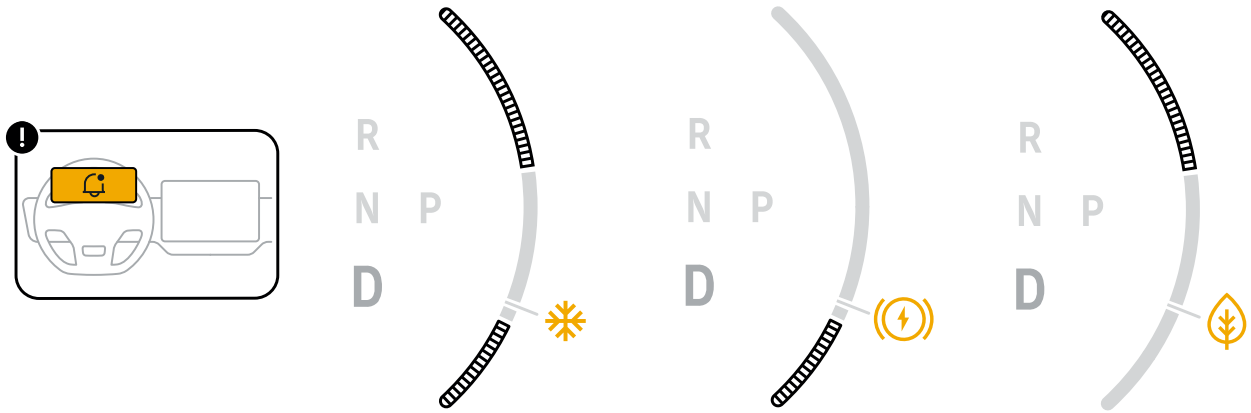

About Your Vehicle

To navigate to About Your Vehicle, go to **Settings** from the center display, and then choose **About**.

From About Your Vehicle, you can do the following:

- Name your vehicle.
- View the odometer.
- View the Vehicle Identification Number (VIN).
- View the vehicle package.
- View information such as battery pack.
- Contact Rivian.

NAME YOUR VEHICLE

Customize your vehicle name on the center display. Go to **Settings** › **About** and select the Vehicle name field. You can also name your vehicle in the Rivian app.

> **NOTE**
> If you'd like to add emojis to your vehicle name, use the Rivian app.

TRIP DATA

Store data from two trips under Trip A and Trip B. Each trip tracks the following information:

- Total distance
- Average speed
- Efficiency
- Duration
- Total energy

To reset your trip data:

1. Go to **Settings** from the center display, and then choose **About**.
2. Select the trip that you want to reset.
3. Select **Reset Trip**.

Wipers

Use the lights stalk on the left side of the steering wheel to control the wipers and washers. The driver display shows the current wiper mode.

FRONT WINDSHIELD WIPERS

Use the wiper switch on the lights stalk to control the wiper speed.

- Push the wiper switch up to increase the wiper speed from low to high.
- Push the wiper switch down to decrease the wiper speed from high to low.

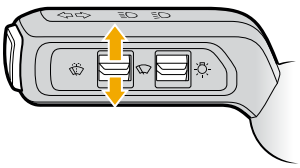

Use the wiper switch to cycle through the wiper modes on the driver display.

Icon	Wiper Speed
	Storm
	Downpour
	Shower
	Drizzle
	Sprinkle
	Auto
	Off

CAUTION

- In cold weather, fully defrost the windshield before you turn on the wipers. If the wipers are frozen to the windshield, this could cause damage to the wiper motor.
- Don't wax, wash, or coat the windshield with products containing water repellent. These products can affect rain detection, preventing the automatic wiper function from working correctly.

AUTOMATIC FRONT WIPERS

Use the wiper switch to cycle through the wiper modes on the driver display. Select **Auto** to enable the automatic front wipers.

In Auto mode, the wipers operate automatically to clear the windshield when the sensors detect water or obstructions such as dust.

NOTE

Automatic wipers do not operate in Car Wash mode.

WINDSHIELD WASHERS

Press and hold the washer button to wash the front windshield. Release the button to stop spraying washer fluid.

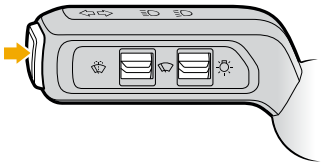

> **NOTE**
> Quickly press and release the washer button to do a single wipe with no washer fluid.

Vehicle Hold

Vehicle Hold brings the vehicle to a stop and holds it stationary without you needing to press the brake pedal. You'll see a Hold icon on the driver display when this feature is on.

> **NOTE**
> To release Vehicle Hold, press the brake.

If you take your foot off the accelerator pedal but don't brake, the vehicle slows down and then stops. After 10 minutes, the vehicle automatically shifts into Park and engages the electronic park brake. Select a gear to drive again.

When Vehicle Hold is active, the vehicle shifts into Park if you exit the vehicle.

Vehicle Hold Not Available

> **CAUTION**
> If the Vehicle Hold feature isn't available, or if you're on a steep grade where Vehicle Hold can't engage, a notification appears on the center display. In these cases, take control by using the brake pedal to bring the vehicle to a stop, and shift to Park before you exit the vehicle. See Emergency Deceleration if normal braking functions don't work.

Vehicle Hold Error

CAUTION

If an error happens while the vehicle is stationary due to Vehicle Hold, the vehicle automatically shifts itself to Park.

If an error happens three consecutive times when you attempt to shift out of Park, Vehicle hold is disabled. Contact Rivian Service.

Emergency Deceleration

If the brakes don't work properly, press and hold the **Park** button to immediately decelerate. An emergency deceleration notification appears on the driver display.

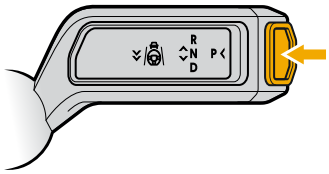

NOTES

- Continue to hold the **Park** button to bring the vehicle to a stop. If the vehicle reaches a standstill, it automatically shifts into Park and applies the parking brake.
- Release the **Park** button to stop deceleration.
- If you press the accelerator pedal while the emergency deceleration is in progress, the emergency deceleration stops.

Electronic Stability Control

The Electronic Stability Control (ESC) system helps the driver maintain vehicle control with the brake system, especially on low grip surfaces. The Electronic Stability Control system provides anti-skid support and assists with preventing loss of vehicle control.

TRACTION CONTROL SYSTEM

The Traction Control System (TCS) adjusts the motor and brake output to optimize vehicle traction and limit wheel slip or spin.

STABILITY SETTINGS

The Stability settings adjust the Electronic Stability Control system and the Traction Control System. When Stability is set to either Reduced or Off, the ESC Off indicator appears on the driver display. You can choose Stability settings manually from **Drive Modes** on the center display. (Read more about Stability settings.)

NOTE

- At the start of your trip, the Electronic Stability Control System and Traction Control System are set to On. This is recommended for most driving conditions.
- If you set the system to Reduced or Off, it will default back to On at vehicle restart.

WARNING

- Keep Stability on in most driving conditions. Electronic Stability Control and Traction Control optimize vehicle traction and provide anti-skid support. Turning off Stability disables both Electronic Stability Control and Traction Control. Keep Stability on in most driving conditions. You must confirm that you want to turn off Stability. Once you leave the vehicle, you may be prompted to confirm the Stability mode.
- In certain environments and driving situations, it may be desirable to turn Stability off. However, if you disable or reduce Electronic Stability Control or Traction Control, this may lead to a loss of control or result in a crash.
- Turning off Stability disables both Electronic Stability Control and Traction Control. You must confirm that you want to turn off Stability. Once you leave the vehicle, you may be prompted to confirm the Stability mode.
- Electronic Stability Control and Traction Control optimize vehicle traction and provide anti-skid support. In certain environments and driving situations, it may be desirable to turn Stability off. An indicator appears in the driver display when Stability is reduced or off. If you disable or reduce Electronic Stability Control or Traction Control, this may lead to a loss of control or result in a crash. An indicator appears on the driver display when Stability is Reduced or Off.

Indicator	System Status	Indicator State
	Electronic Stability Control (ESC) System Active	Flashing Yellow
	Electronic Stability Control (ESC) System Malfunction	Solid Yellow
	Electronic Stability Control (ESC) System Off or Reduced	Solid Yellow

Navigation

Choose the compass icon on the center display to open Navigation. Use Navigation to do the following:

- Browse and search the map
- Select and start navigation to a destination
- Identify locations to charge your vehicle
- Set an address, place, or current location as your Home or Work

When you select a destination, the top one or two estimated fastest routes appear on the map, along with driving times and distances.

Navigation ends your trip when you park your vehicle near the destination.

CHARGING STOPS

If your vehicle doesn't have enough charge to reach a destination, charging stops are added to your trip to ensure sufficient range. Choose "charging stops" on the route preview panel to view detailed charge time recommendations and access site details such as availability and charging speed. You can also view details about a charging station by choosing the charger pins on the map. Choose **Start** to begin navigation to a charger.

If you prefer not to charge at the charging stops, choose **Remove Charging Stops** on the route preview panel. This removes all charging stops from your route.

> **NOTES**
>
> - Battery range estimate for a route is based on your vehicle configuration, selected drive mode, and the route conditions (such as elevation, weather, and your driving speed).
> - As you navigate to a charging stop along a selected route, the vehicle may heat or cool the battery pack to ensure that it reaches its most optimal charging temperature by the time you arrive at the stop. This helps facilitate the fastest possible charge time. When this occurs, you will see a message on the Navigation screen and on the driver display.

TRIP PREFERENCES

Plan your trip on the center display and see available charging options along the route.

1. Search for an address or location.
2. On the details screen, choose the **Trip Preferences** button.
3. On the Trip Preferences screen, choose your preferred charging networks and set your desired arrival range. The route preview on the map changes based on your settings.

> **NOTE**
>
> If you set a high range for your preferred arrival, your trip time may significantly increase. You can opt to keep your preferences for future trips. Otherwise, the Trip Preferences screen resets to system default.

SEND LOCATION FROM PHONE

Share an address or location from the Rivian mobile app (version 1.9 or later) to your vehicle. A shared location is available for 24 hours after you send it from the mobile app.

1. Search for a place or charging location within the Rivian mobile app. You can also find a place in Google Maps™ or Apple® Maps.
2. To send the location to the vehicle, do the following:
   - From the Rivian mobile app, choose **Send**.
   - From other apps, choose **Share** and select the Rivian mobile app from the list of share options.
3. The Navigation app on the vehicle's center display shows a preview of your route and the option to start navigation.

NOTES

- You can plan a trip from the Rivian mobile app and send the destination to your vehicle. The destination appears on the map with your preferences applied.
- If you share more than one location, the last shared location is sent to the Navigation app.
- You can copy an address or location from elsewhere on your phone and paste it into one of the apps that support location sharing to send it to your vehicle.
- If you're already in an active navigation session, you have the option to replace your current destination with the new location sent from your phone.

DRIVE MODES

On-Road Drive Modes

Drive modes customize your vehicle's air suspension, semi-active dampers, and adjustable roll control to manage vehicle ride height and movement. The following drive modes optimize your vehicle's performance for different on-road conditions and driving activities, including driving in the snow or towing a trailer:

- All-Purpose
- Sport (Quad Motor and Performance Dual Motor only)
- Conserve (Quad Motor only)
- Snow
- Towing

ALL-PURPOSE

All-Purpose mode maximizes comfort for daily driving. As the most versatile mode, All-Purpose is recommended in all on-road conditions, including rainy weather. This mode keeps the vehicle at Standard ride height for city driving, and changes to Low ride height at highway speeds for better aerodynamics and increased range. (See Ride Height to customize this setting.)

To save energy and maximize range in Dual Motor vehicles, All-Purpose mode automatically switches to front-wheel drive when conditions allow.

SPORT

Sport mode prioritizes on-road vehicle performance and a responsive driving experience. Sport mode stiffens and lowers the suspension for optimal responsiveness and handling. The vehicle stays in all-wheel drive for maximum power transfer between tires and pavement.

CONSERVE

Conserve mode optimizes the vehicle for maximum range on longer trips. This mode switches to front-wheel drive and lowers the ride height for a more aerodynamic position at higher speeds. Since Conserve mode is front-wheel drive, it's not recommended in rain, snow, or other conditions with reduced traction.

SNOW

Snow mode maximizes confidence and control on roads and highways with snow, slush, or ice. A relaxed pedal response and reduced regenerative braking allow for more precise control on low-grip surfaces. Like All-Purpose, this mode keeps the vehicle at Standard ride height for city driving, and changes to Low ride height at highway speeds. (See Ride Height to customize this setting.)

> **NOTE**
>
> To go off road in snow, use All-Terrain mode.

TOWING

Towing mode helps you pull a trailer safely. Towing mode keeps the vehicle in all-wheel drive and provides maximum available torque. Built-in trailer brake gain controls add more stopping power. (See Towing a Trailer.)

Off-Road Drive Modes

Drive modes customize your vehicle's air suspension, semi-active dampers, and adjustable roll control to manage vehicle ride height and movement. The following drive modes optimize your vehicle's performance for various off-road conditions and driving activities:

- All-Terrain
- Soft Sand (Quad Motor only)
- Rock Crawl (Quad Motor only)
- Rally (Quad Motor only)
- Drift (Quad Motor only)

ALL-TERRAIN

All-Terrain mode prioritizes off-road vehicle performance and capability. All-Terrain mode is a versatile mode for moderate off-road conditions. This mode increases the ride height and softens the suspension for a smoother ride.

SOFT SAND

Soft Sand mode maximizes vehicle performance and capability in deep sand. This mode uses unique traction control settings, minimal stability control support, and reduced regenerative braking to optimize vehicle handling.

ROCK CRAWL

Rock Crawl mode sets the ride height to High, balancing stability with maximum clearance. It applies the ideal amount of power from the four motors to each wheel as you traverse large obstacles.

RALLY

Rally mode tunes the vehicle for higher off-road speeds on gravel roads. This mode puts the vehicle in Standard ride height and reduces traction control.

DRIFT

Drift mode allows more slide while off-road in snow, sand, and loose dirt. This mode delivers increased power to the rear axle while reducing power to the front. Traction control is also reduced.

Stability

Choose a Stability setting based on the drive mode.

- **On:** Electronic Stability Control (ESC) and Traction Control System (TCS) provide maximum stability and traction in all driving conditions.
- **Reduced:** Both Electronic Stability Control (ESC) and Traction Control System (TCS) can still activate to help stabilize the vehicle. Reduced allows a small amount of wheel spin.
- **Off:** Completely disables Electronic Stability Control (ESC) and keeps Traction Control System (TCS) in its least restrictive setting. Off allows the highest level of wheel spin.

Drive Mode	Stability Settings Available		
All-Purpose	On (default)	Reduced	Off
Sport	On (default)	Reduced	Off
Conserve	On (default)	—	—
Snow	On (default)	Reduced	Off
Towing	On (default)	—	—
All-Terrain	On (default)	Reduced	Off
Soft Sand	—	—	Soft Sand (default)
Rock Crawl	On (default)	Reduced	—
Rally	—	Reduced (default)	Off
Drift	—	Reduced	Off (default)

Ride

Choose a Ride setting based on the drive mode.

- **Stiff:** Firm suspension for a more responsive ride
- **Soft:** Soft suspension for a more comfortable ride

Drive Mode	Ride Settings Available	
All-Purpose	Stiff	Soft (default)
Sport	Stiff (default)	Soft
Conserve	Stiff	Soft (default)
Snow	Stiff	Soft (default)
Towing	Stiff (default)	Soft
All-Terrain	Stiff (default)	Soft
Soft Sand	—	Soft (default)
Rock Crawl	Stiff	Soft (default)
Rally	Stiff	Soft (default)
Drift	Stiff (default)	Soft

Brake Regen

Regenerative braking happens automatically when you lift your foot off the accelerator pedal. (See Brakes.)

Choose a Brake Regen setting as follows:

- **Standard:** Moderate regenerative braking. Standard is the default setting for all modes except Snow and Soft Sand modes.
- **High:** Stronger regenerative braking. The vehicle slows down faster and captures more energy.
- **Low:** Limited regenerative braking. Low is the default setting for Snow and Soft Sand modes and is not available in other modes.

Hold

Hold is on by default in all drive modes. You can turn off Hold in Rock Crawl mode.

- **On:** Hold helps to stop the vehicle and holds it stationary even if you do not keep the brake pedal pressed. Press the brake pedal as needed. (See Vehicle Hold.)
- **Off:** Release the brake pedal to roll freely. Press the brake pedal to slow, stop, or hold the vehicle stationary.

Ride Height

Ride Height changes the distance from the lowest point of the vehicle to level ground.

- **Highest:** 3.5 in (90 mm) higher
- **High:** 1.6 in (40 mm) higher
- **Standard:** Mid-level
- **Low:** 1.4 in (35 mm) lower
- **Lowest:** 2.0 in (50 mm) lower

Choose a ride height based on the drive mode.

Drive Mode	Ride Heights Available				
All-Purpose	—	High	Standard (default)	Low	—
Sport	—	—	—	Low (default)	Lowest
Conserve	—	—	Standard (default)	Low	Lowest
Snow	—	High	Standard (default)	Low	—
Towing	—	—	Standard (default)	Low	—
All-Terrain	Highest	High (default)	Standard	—	—
Soft Sand	Highest	—	Standard (default)	—	—
Rock Crawl	Highest	High (default)	—	—	—
Rally	—	High	Standard (default)	—	—
Drift	—	High	Standard (default)	—	—

AUTOMATIC RIDE HEIGHT CHANGES

- The Auto ride height setting is available in All-Purpose, Conserve, and Snow modes.
- When the ride height is set to Auto, the vehicle automatically changes to Low ride height at higher speeds for increased efficiency and energy conservation. The vehicle returns to Standard ride height at lower speeds for increased ground clearance and comfort.
- In All-Purpose, Conserve, or Snow mode, manually select another available ride height to turn off automatic ride height changes. Select **Auto** to reactivate automatic ride height changes.

NOTES

- The air suspension automatically adjusts to maintain ride height while the vehicle is moving or stopped.
- The air suspension may also adjust to ensure the vehicle appears level. This happens after you stop or put the vehicle in Park, even if you have left the vehicle.

RIDE HEIGHT DETAILS

- Be aware of conditions that require increased ground clearance when using Low or Lowest ride heights. This includes going over speed bumps, steep driveways, or off-road obstacles.
- Off-Road modes with Highest ride height are limited to speeds under 20 mph (32 km/h).
- You can only choose Low ride height in Towing mode when the vehicle is stopped.

DRIVER+

Driver+ Sensors and Cameras

FRONT AND REAR

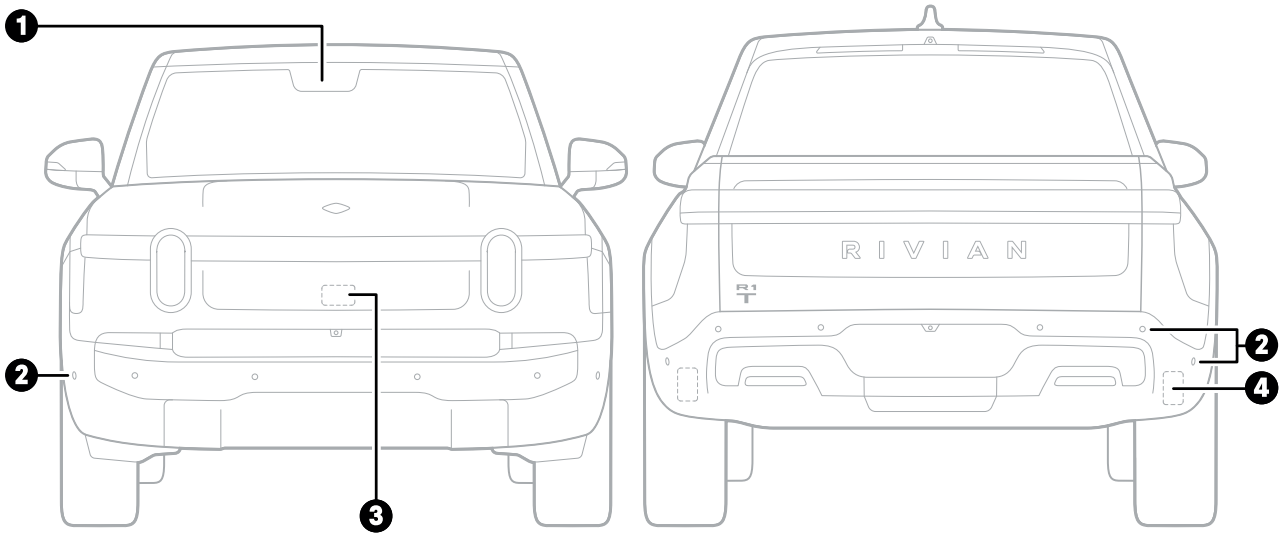

Item	Description
1	Front camera
2	Ultrasonic sensors
3	Front radar sensor
4	Corner radars

DRIVER'S SIDE

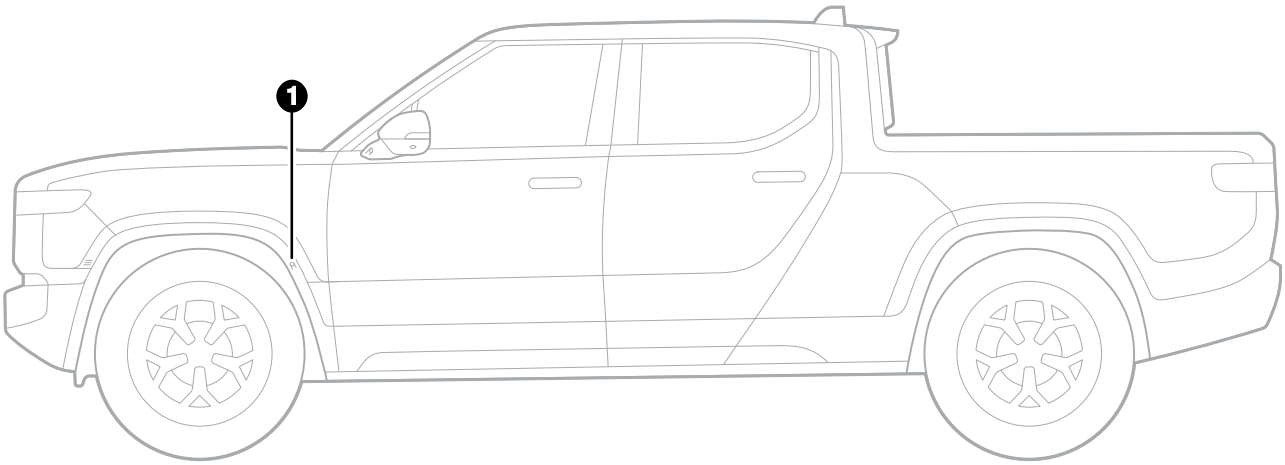

Item	Description
1	Fender camera

NOTE

If a sensor malfunctions, a red triangle with an exclamation mark appears at the bottom of the driver display.

Adaptive Cruise Control and Highway Assist

Adaptive Cruise Control (ACC) maintains a target speed and automatically accelerates and brakes to keep an appropriate distance from vehicles ahead of you in the current lane. On select highways, Highway Assist (HWA) performs all the ACC functions and steers the vehicle to keep it centered in the current lane. Curve Speed Assist (CSA) adjusts the vehicle's speed to provide additional safety and comfort when you drive on curvy roads.

When you drive in traffic, Adaptive Cruise Control and Highway Assist bring the vehicle to a complete stop and automatically resumes in response to the vehicle in front.

IMPORTANT

The front camera is located behind the rearview mirror. The front radar is located at the center of the front bumper. Keep these areas clean and free of obstructions. Don't apply film, stickers, metal plates or other equipment that could block the front camera or front radar. Only use Rivian-supplied paint protective film (PPF).

The Adaptive Cruise Control and Highway Assist features may be unavailable or may disengage if the front camera or front radar are blocked. In these cases, notifications on the driver display provide additional instructions to the driver.

WARNING

When Adaptive Cruise Control or Highway Assist are engaged, always monitor traffic and driving conditions and be prepared to steer or brake if needed. These features are designed to support the driver and don't replace the driver's attention, judgment, and need to control the vehicle. These features won't prevent collisions in all situations.

OPERATING CONDITIONS

Feature	Condition
Adaptive Cruise Control	• You're not in Off-Road or Towing mode. • Lane lines are clearly visible. • You're traveling within the activation speed range: 20 to 85 mph (32 to 136 km/h). If you are traveling under the minimum activation speed, you can't activate Adaptive Cruise Control unless there is a vehicle in front of you within a certain sensing range.
Highway Assist	• You're not in Off-Road or Towing mode. • You're centered in your lane. • You're on a select highway and the Highway Assist Available icon is present on the driver display. • Your hands are on the steering wheel. • You're traveling within the activation speed range: 20 to 85 mph (32 to 136 km/h). If you are traveling under the minimum activation speed, you can't activate Highway Assist unless there is a vehicle in front of you within a certain sensing range.
Curve Speed Assist	• You're not in Off-Road or Towing mode. • You're traveling within the activation speed range: 20 to 85 mph (32 to 136 km/h).

NOTES

- The "Adaptive Cruise Control unavailable" or "Highway Assist unavailable" notification appears in the driver display if the front or rear sensors are blocked.
- If Adaptive Cruise Control is engaged and front camera visibility is reduced from blur or glare, a chime sounds, and a notification appears in the driver display to "Stay attentive." The notification displays for as long as the camera's visibility is affected.
- Adaptive Cruise Control and Highway Assist are unavailable while in Towing mode. Refer to Manual Cruise Control.

ADAPTIVE CRUISE CONTROL HOLD

When Adaptive Cruise Control is engaged and the traffic stops in front of you, Adaptive Cruise Control stops the vehicle. If you are stopped for at least 30 seconds, the vehicle pauses Adaptive Cruise Control. To resume Active Cruise Control, lightly press the accelerator pedal.

NOTE

If Adaptive Cruise Control decelerates the vehicle to a complete stop and then remains stopped for 10 continuous minutes, Adaptive Cruise Control disengages and automatically shifts the vehicle to Park.

ENGAGE ADAPTIVE CRUISE CONTROL

To engage Adaptive Cruise Control while driving, push the drive stalk all the way down once and then release. The vehicle chimes and then sets the current speed as the target speed. The target speed appears in a circle at the top of the driver display.

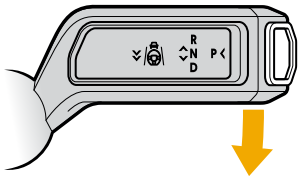

While Adaptive Cruise Control is engaged, press the accelerator to temporarily accelerate above the target speed. Release the accelerator pedal to resume Adaptive Cruise Control. To disengage Adaptive Cruise Control, push the drive stalk up or press the brake pedal.

NOTES

- Regenerative braking slows down the vehicle after you disengage Adaptive Cruise Control.
- Adaptive Cruise Control disengages immediately if you open any door, unbuckle the driver's seat belt, or if you shift the vehicle out of Drive.
- You can't change the drive mode or ride height when Adaptive Cruise Control or Highway Assist are engaged.
- The vehicle can automatically adjust the ride height based on the vehicle speed. Refer to Automatic Ride Height Changes.

CHANGE THE SPEED AND FOLLOWING DISTANCE

After you engage the Adaptive Cruise Control, you can adjust the target speed and minimum following distance with the controls on the right hand side of the steering wheel.

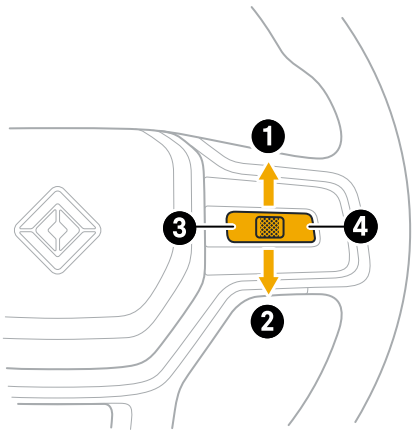

Item	Control	Function
1	Thumb control up	Increase following distance
2	Thumb control down	Decrease following distance
3	Left thumb control button	Reduce speed • Quick press - reduce by 1 mph (1 km/h) increments • Long press - reduce to the nearest 5 mph (10 km/h) increments
4	Right thumb control button	Increase speed • Quick press - increase by 1 mph (1 km/h) increments • Long press - increase to the nearest 5 mph (10 km/h) increments

> **NOTE**
> You can also use the drive stalk to set a new Adaptive Cruise Control or Highway Assist speed. Accelerate to a new speed then push the drive stalk all the way down once and release.

ENGAGE HIGHWAY ASSIST

If the Highway Assist Available icon appears while driving, you can engage Highway Assist.

To engage Highway Assist, push the drive stalk all the way down twice within 1 second and then release. The vehicle sets the current speed as the target speed. Highway Assist automatically steers the vehicle to keep it centered in the lane.

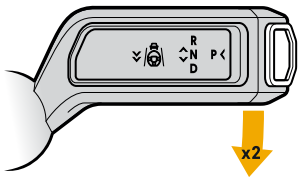

State	Stalk Action (within 2 seconds)	Speed	Result
Highway Assist available	Push down two times	Quickly	Highway Assist engages
Highway Assist unavailable	Push down two times	Slowly	Adaptive Cruise Control engages
Highway Assist unavailable	Push down two times	Quickly	• Highway Assist doesn't engage • Adaptive Cruise Control doesn't engage

> **NOTE**
> If Highway Assist is unavailable when you try to engage it, the vehicle chimes and notifies you that the feature is unavailable.

To disengage Highway Assist, push the drive stalk up or press the brake pedal.

DANGER

- Adaptive Cruise Control and Highway Assist may disengage without warning due to road conditions, environmental conditions, or a system malfunction.
- When Highway Assist is engaged, the system periodically reminds you to keep your hands on the wheel.
- Always be ready to take control of the vehicle.
- Failure to promptly take control of the vehicle may result in property damage, injury, or death.

NOTES

- If you turn the steering wheel while Highway Assist is engaged, the system switches to Adaptive Cruise Control at the current target speed.
- Adaptive Cruise Control and Highway Assist reduce the vehicle's speed when cornering.
- Adaptive Cruise Control and Highway Assist don't adjust the target speed according to the posted speed limits. It's your responsibility to adjust the target speed according to the posted speed limit.
- The Highway Assist Available icon doesn't appear if you aren't centered in the lane.
- Highway Assist only functions on certain divided or controlled-access highways.

Driver Take Over Request

In certain road conditions or when system failures occur, Highway Assist provides audible and visual notifications for you, the driver, to take control. If you don't take control of the vehicle within a certain period of time, Highway Assist continues to provide warnings and starts decelerating. While the vehicle is decelerating, you can either push the drive stalk up one time and release, or press the brake pedal to take full control of the vehicle. If you don't take control of the vehicle, Highway Assist brings the vehicle to a complete stop and then automatically turns on the hazard lights. Highway Assist then remains unavailable until you shift out of Park to start a new drive cycle.

CURVE SPEED ASSIST

Curve Speed Assist (CSA) provides additional safety and comfort to Adaptive Cruise Control and Highway Assist when driving on curvy roads. Curve Speed Assist adjusts the vehicle's speed based on road curves and the driver's steering input.

A curvy arrow appears to the right of the Adaptive Cruise Control set speed icon and the Highway Assist icon when Curve Speed Assist is on.

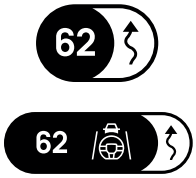

NOTE

Curve Speed Assist operates only when Adaptive Cruise Control is on and not during manual driving.

WARNING

- In certain conditions such as a high-speed approach to a curve or a road with sharp curves, Curve Speed Assist may not reduce speed sufficiently. Don't rely solely on Curve Speed Assist to control the vehicle.
- Curve Speed Assist doesn't monitor posted speed limits.
- Curve Speed Assist is designed to support the driver and don't replace the driver's attention, judgment, and need to control the vehicle.

ENVIRONMENTAL AND DRIVING CONDITIONS

Under certain conditions, Adaptive Cruise Control, Highway Assist, and Curve Speed Assist may not work as expected. Adaptive Cruise Control may either brake when not required or may not brake for vehicles and objects.

Severe Weather

WARNING

- Severe weather affects the performance of Adaptive Cruise Control, Highway Assist, and Curve Speed Assist. Use your judgment when driving in heavy rain, snow, or other environmental conditions that reduce visibility around the vehicle.
- Adaptive Cruise Control or Highway Assist may disengage without warning in severe weather, extreme temperatures, or if sunlight shines directly into the front camera.
- Do not use Adaptive Cruise Control and Highway Assist on slippery, unpaved, wet, or snowy roads.

Sharp Curves and Steep Grades

WARNING

Roads with sharp curves or steep grades affect the performance of Adaptive Cruise Control, Highway Assist, and Curve Speed Assist. Always be prepared to take control of the vehicle if needed.

Adjacent Vehicles and Merging Lanes

WARNING

Adaptive Cruise Control or Highway Assist do not accelerate or decelerate in response to vehicles or objects in adjacent lanes. Always watch for vehicles in adjacent lanes, especially when your driving lane merges into another lane. Be prepared to take control of the vehicle if needed.

Road Conditions

WARNING

- Highway Assist may not perform as expected through road construction zones. Be prepared to take control of the vehicle if needed.
- Curve Speed Assist may not work as expected when you're traveling on uneven or loose surfaces such as gravel or sand.

Driving Conditions

WARNING

Adaptive Cruise Control or Highway Assist may not work as expected under certain driving conditions. Such conditions include, but are not limited to, the following:

- When you closely follow a vehicle ahead of you in the driving lane, or if a vehicle suddenly cuts into the driving lane.
- When a vehicle or object is partially in the driving lane, such as in a merge or turn lane.
- When you change lanes and the vehicle detects a stationary or slow-moving vehicle or object ahead.
- In a busy urban or residential area with rapidly changing road conditions, pedestrians, cyclists, intersections, and roundabouts.

Automatic High Beams

When active, Automatic High Beams switches between high and low beams based on the vehicle traffic, ambient light, and road conditions detected by the front camera. Automatic High Beams activates in low-light road conditions when the vehicle doesn't detect light from the headlights or taillights of other vehicles, or from road or street lighting. This reduces glare for drivers of oncoming or preceding vehicles.

USE AUTOMATIC HIGH BEAMS

To turn on Automatic High Beams, choose **Settings** from the menu on the center display. Choose **Vehicle**, and then choose **Driver+**. Turn on **Automatic High Beams**.

To turn off Automatic High Beams, choose **Settings** from the menu on the center display. Choose **Vehicle**, and then choose **Driver+**. Turn off **Automatic High Beams**.

OPERATING CONDITIONS

Feature	Condition
Automatic High Beams	• The lights aren't in Parking Lights or Off mode. • Automatic High Beams is turned on. • Activation speed is 25 mph (40 km/h). • Deactivation speed is 18 mph (29 km/h).

NOTES

- Ensure the windshield and front camera behind the rearview mirror are clean and clear of any obstructions.
- Automatic High Beams don't turn on when the vehicle travels less than 18 mph (29 km/h).
- Automatic High Beams may not turn on high beams, or it may not turn on high beams immediately, if the vehicle detects pedestrians or bicyclists.

ENVIRONMENTAL AND DRIVING CONDITIONS

IMPORTANT

Automatic High Beams may not work as expected in certain environments and driving situations. The feature may either turn on high beams in error or not turn on high beams as expected under such conditions that include, but are not limited to, the following:

- Environmental conditions, such as mud, dirt, snow, ice, or slush, block the front camera.
- Weather conditions, such as heavy rain or snow, lower visibility.
- Extreme temperatures affect the vehicle.
- Fog as well as scratches, cracks, and damage to the windshield lower visibility.
- Oncoming or preceding vehicles have damaged or broken headlights or taillights.
- Roads have sharp curves or steep grades.
- Roads have reflective road or street signs.

Rear Cross-Traffic Warning

The Rear Cross-Traffic Warning provides a warning on the center display, driver display, and provides an audible warning of vehicles approaching from the sides behind your vehicle. The feature activates when in Reverse or rolling backward in Neutral.

The system uses rear radar sensors to detect vehicles approaching from either side when backing out of a perpendicular or angled parking space.

WARNING

- Rear Cross-Traffic Warning only provides support to the driver and doesn't replace the driver's attention and judgment when the vehicle is in Reverse or rolling backward in Neutral.
- The detection range for Rear Cross-Traffic Warning may vary, depending on the approaching vehicle's speed.
- The rearview camera image may not appear on the center display when vehicle is rolling backward in Neutral.

OPERATING CONDITIONS

Feature	Condition
Rear Cross-Traffic Warning	• You're not in Off-Road or Towing mode. • Your vehicle is traveling in Reverse or rolling backward at a speed between 0 to 6 mph (0 to 10 km/h). • The approaching vehicle is within approximately 82 ft (25 m) of the left or right side of your vehicle. • The relative speed between your vehicle and the approaching vehicle is in the range of 2 to 18 mph (4 to 30 km/h).

SETTINGS

You can enable or disable the audible chimes for Rear Cross-Traffic Warning from the Driver+ Settings menu on the center display. The audio alert will chime if there is a cross-traffic vehicle behind your vehicle, traveling within the activation speed range.

NOTE

A visual alert is always enabled on the driver display when there's a cross-traffic vehicle behind your vehicle.

REAR CORNER RADAR SENSORS

The rear corner radar sensors are on the corners of the rear bumpers. Ultrasonic sensors located around the vehicle measure distance between the vehicle and surrounding objects.

IMPORTANT

Keep the bumpers clean and free of obstructions. Don't apply items such as film, stickers, metal plates, or other equipment that could block the sensors. Only use Rivian-supplied paint protective film (PPF).

WARNING

Rear Cross-Traffic Warning may not work as expected in certain environments and driving situations. The feature may either not warn or provide a false warning under such conditions that include, but are not limited to, the following:

- In severe weather such as heavy rain, snow, or other environmental conditions that reduce visibility around the vehicle.
- Radar sensors are covered with snow, mud, rain, dirt, stickers, or metallic objects.
- The rear bumper has been damaged, replaced, or modified.
- The radar sensor is out of position.
- A trailer, bike rack, or cargo basket is attached to the tow hitch.
- When a fast-approaching vehicle passes.
- Occasionally when passing guard rails, tunnels, trees, or parked cars.
- Detecting vehicles in the next lane on narrow roads.
- When the outside temperature is too warm or cold.
- When there are slow moving pedestrians, pets, or objects such as shopping carts.
- On certain uneven surfaces.
- Obstructing objects or closely parked vehicles that may block the field of view.

NOTE

The Rear Cross-Traffic Warning unavailable notification appears in the driver display if one or more of the above conditions exist or if there is a system malfunction.

Park Assist

Park Assist is a low-speed feature that assists with reverse and parking maneuvers. Ultrasonic sensors measure distances around the vehicle. The feature provides a warning on the driver display and an audible warning if an object is too close to the vehicle.

The sensors can measure the following ranges around the vehicle:

- Front or rear up to 57 in (1.45 m)
- Sides up to 29 in (0.75 m)

The system displays warnings for objects detected within the sensor range as follows:

- When you shift from Park or Neutral to Drive, Park Assist triggers only when a object is detected in the front of the vehicle at a distance of approximately 30 in (0.75 m).
- When you shift into Reverse, the driver display shows a top down view of the vehicle and warnings are provided for objects detected in the sensor range.
- Park Assist provides audible warnings for objects that are detected in the vehicle path.
- When in Drive, chime warnings are only provided for objects detected in front of the vehicle and the front sides of the vehicle.

- When in Reverse, chime warnings are only provided for objects detected behind the vehicle and the rear sides of the vehicle.
- Park Assist provides warnings for objects detected on the sides only when the vehicle is moving.
- When an object is first detected in the vehicle's path, the system will chime once. As the object moves closer, the frequency of the chime increases. When the object is detected at the closest distance, the system provides a continuous chime.
- Park Assist will not chime when the vehicle is traveling at a speed less than 0.12 mph (0.2 km/h).
- If you open any of the cabin doors, it disables the visual and chime warnings for the sides of the vehicle.
- If you open the tailgate, it disables the visual and chime warnings for the rear and sides of the vehicle.
- If the vehicle remains stationary for approximately 10 seconds, the side warnings will go away.

WARNING

- Park Assist only provides support to the driver while parking and doesn't replace the driver's attention and judgment.
- Park Assist is not a substitute for careful and attentive driving. Do not depend on Park Assist alone to determine whether there is an approaching vehicle or if the area is free of people and objects. Visually check that there are no children, pedestrians, bicycles, animals, or objects present in your blind spots. Depending on Park Assist alone can result in serious injury or damage to the vehicle.
- Park Assist may not detect children, pedestrians, bicycles, animals, or objects that are below the bumper or are out of the range of the sensors.
- The system doesn't detect objects that are too close or too far away from the sensors.

OPERATING CONDITIONS

Feature	Condition
Park Assist	• You're traveling at a speed less than 6 mph (10 km/h). • All doors are closed. • The tailgate is closed. • You're not in Towing mode. • None of the front or rear sensors are blocked.

NOTES

- Standard ride height provides the best sensor performance.
- If Park Assist is unavailable due to a malfunction, a notification appears on the left side of the driver display one time during a drive cycle.

SETTINGS

Audible Warnings

You can enable or disable the audible warnings for Park Assist in the Driver+ settings from the center display at any time during the drive cycle.

> **NOTE**
> You can't disable the Park Assist visual warnings.

Rear Accessory Mode

When you have accessories installed on the rear tow hitch, you can hide rear visual alerts and mute audio warnings while in reverse. To enable this feature, choose **Settings** from the center display, and then choose **Vehicle**. Choose **Driver+** and turn on Rear accessory.

> **NOTE**
> If your accessory is plugged in to the vehicle's electrical trailer connector, Park Assist, Lane Keep Assist, and Automatic Emergency Braking are disabled.
>
> Adaptive Cruise Control is unavailable, but you can use Manual Cruise Control.

Automatic Front Camera

You can toggle Automatic Front Camera off or on by choosing Settings from the center display. Go to Settings, then choose Vehicle, and then choose Driver+.

Setting	Description
On (default)	If the Automatic Front Camera is enabled, the center display shows the front camera view when you shift from Reverse to Drive. This makes it easier to park in tight parking spots and provides additional visibility in front of the vehicle.
Off	If the Automatic Front Camera is turned off, the center display shows the rear camera view when you shift to Reverse. The system doesn't automatically switch to the front view when you shift from Reverse to Drive.

> **NOTE**
> The front camera view activates when the vehicle speed is less than 6 mph (10 km/h).

ENVIRONMENTAL AND DRIVING CONDITIONS

Park Assist may not work as expected in certain environments and driving situations. The feature may either not warn or provide a false warning under such conditions that include, but are not limited to, the following:

Severe Weather

WARNING

Severe weather affects the accuracy of the front and rear sensors. Use your judgment when parking in heavy rain, snow, or other environmental conditions that reduce sensor performance.

Low Speed

WARNING

The system will not chime when the vehicle is traveling at a speed less than 0.12 mph (0.2 km/h).

Doors are Open

WARNING

- The Park Assist feature doesn't detect objects on the side of the vehicle when any of the cabin doors are open.
- If the tailgate is down, a trailer is attached, or if the rear sensors are blocked, the rear and side warnings are unavailable.

Ultrasonic Sensors

WARNING

- Ensure the sensors are not covered with snow, mud, rain, dirt, stickers, or metallic objects.
- In freezing temperatures, clean the sensors after a car wash.
- If the front sensors are blocked, front and side warnings are unavailable.

Tow Hitch

WARNING

Park Assist doesn't sense non-electrical tow hitch attachments such as a trailer, bike rack, or cargo basket. If there are tow hitch attachments that are not connected to the electrical connector, you will receive continuous warnings.

Environmental Conditions

WARNING

Park Assist may not work as expected in certain environments and driving situations. The feature may either not warn or provide a false warning under such conditions that include, but are not limited to, the following:

- When a fast approaching vehicle passes.
- In extreme temperatures.
- Excessive noise or vibration from nearby construction equipment such as jackhammers, heavy-duty air compressors, and so on.

Blind Spot Warning

Blind Spot Warning (BSW) alerts you when it detects vehicles in your blind spot. A warning appears on the driver display and side view mirrors. If the turn indicator is on, the warning graphic on the driver display changes color, the indicator on the side view mirror flashes, and an audible alert plays.

The Blind Spot Warning status indicator appears on the driver display if the feature malfunctions.

IMPORTANT

Keep the bumpers clean and free of obstructions. Don't apply items such as film, stickers, metal plates, or other equipment that could block the sensors. Only use Rivian-supplied paint protective film (PPF).

WARNING

Blind Spot Warning is designed to support the driver and doesn't replace the driver's attention, judgment, and need to control the vehicle. Visually check that no vehicles are present in your blind spots to safely change lanes.

OPERATING CONDITIONS

Feature	Condition
Blind Spot Warning	• You're not in Off-Road or Towing mode. • Another vehicle is detected within the blind spot sensing range on either side of your vehicle. • The speed difference between your vehicle and the vehicle in your blind spot is less than 12 mph (20 km/h). • You're traveling within the activation speed range: 18 to 108 mph (29 to 174 km/h).

SETTINGS

Turn the audio alert for Blind Spot Warning on or off from the Driver+ settings menu on the center display. If turned on, the audio alert chimes if you have a turn signal on and there is a vehicle detected in the blind spot on the side of the turn signal.

> **NOTE**
>
> A visual alert on the driver display appears when there's a car in a blind spot to either side of your vehicle.

ENVIRONMENTAL AND DRIVING CONDITIONS

Blind Spot Warning may not work as expected in certain environments and driving situations. The feature may either not warn or provide a false warning under such conditions that include, but are not limited to, the following:

Severe Weather

> **WARNING**
>
> Severe weather conditions such as heavy fog, snow, rain, or extreme temperatures.

Sensors and Radars

> **WARNING**
>
> - Sensors are covered with mud, dirt, snow, rain, stickers, or metallic objects.
> - The radar is out of position.

Tow Hitch

> **WARNING**
>
> A trailer, bike rack, or cargo basket is attached to the tow hitch.

Driving Conditions

> **WARNING**
>
> - During lane changes.
> - On uneven roads or roads with different lane heights.
> - When a fast-approaching vehicle passes.
> - When a motorcycle, bicycle, or small car is in the blind spot.
> - When you drive past non-moving objects on a narrow road, such as trees or parked cars.

Collision Mitigation

Three features work together for collision mitigation:

- **Forward Collision Warning (FCW)** detects potential frontal collisions with other vehicles or pedestrians. It uses audio and visual alerts, plus steering wheel vibration, to warn you to take immediate corrective action.
- **Automatic Emergency Braking (AEB)**, when enabled, automatically applies the brakes to help mitigate or prevent a collision if you don't react in time to a warning.
- **Dynamic Brake Support (DBS)** provides additional braking if you don't press the brake pedal hard enough to prevent an imminent collision.

The Automatic Emergency Braking status indicator appears on the driver display when the feature malfunctions or is turned off.

IMPORTANT

Keep the windshield, headlamps, front camera, and front radar in good condition and clear of any obstructions. Automatic Emergency Braking may not detect people or cars ahead if the front camera or front radar sensors are blocked or malfunctioning.

WARNING

Forward Collision Warning, Automatic Emergency Braking, and Dynamic Brake Support are features designed to support the driver and don't replace the driver's attention, judgment, and need to control the vehicle.

Feature Behaviors

WARNING

- Automatic Emergency Braking gives priority to the driver's braking if they're able to react quicker than the feature can engage.
- The brake pedal moves downward when Automatic Emergency Braking engages. Ensure that the brake pedal isn't obstructed in any way for Automatic Emergency Braking to function.
- Forward Collision Warning and Automatic Emergency Braking may unexpectedly alert the driver and/or apply braking as a response to certain traffic conditions such as road debris, traffic signs, overhead passes, guardrails, bridges, tunnels, metal plates on the road, and other non-moving objects. In these scenarios, if it is safe to do so, the driver can press the accelerator pedal firmly to override the Automatic Emergency Braking.

Automatic Emergency Braking won't brake in any of the following conditions:

- You accelerate hard.
- You turn sharply.
- Your vehicle is not within certain operating speeds.
- The vehicle determines that there isn't a potential for frontal collision.

If Automatic Emergency Braking is currently braking the vehicle, any of the following conditions disengage the feature:

- You accelerate hard to override the Automatic Emergency Braking.
- You turn sharply.
- You apply the brake pedal hard and then release it.
- The vehicle determines that there is no longer a potential for frontal collision.

OPERATING CONDITIONS

Feature	Condition
Forward Collision Warning and Automatic Emergency Braking	• You're not in Off-Road mode. • You're traveling within the activation speed range: 5 to 112 mph (8 to 180 km/h)
Automatic Emergency Braking	• You're not in Towing mode. • Forward Collision Warning is turned on.
Dynamic Brake Support	• You're traveling within the activation speed range: 6 to 112 mph (9 to 180 km/h)

NOTES

- Dynamic Brake Support only becomes available once you enable Automatic Emergency Braking.
- To deactivate Dynamic Brake Support, release the brake pedal while the feature is active.

SETTINGS

Manage the Forward Collision Warning and Automatic Emergency Braking features from the Driver+ settings menu on the center display. You can customize the following options:

- **On or Off:** Both Forward Collision Warning and Automatic Emergency Braking can be turned on or off.

  Alert Timing: For Forward Collision Warning, choose how early you'd like to receive the alert.

  NOTES

  - Both features are on by default.
  - If you turn a feature off, the feature defaults back to on when you restart the vehicle.
  - Forward Collision Warning must be on for you to turn on Automatic Emergency Braking.

ENVIRONMENTAL AND DRIVING CONDITIONS

Forward Collision Warning, Automatic Emergency Braking, and Dynamic Brake Support may not work as expected in certain environments and driving situations. The features may either not warn or provide a false warning under such conditions that include, but are not limited to, the following:

Severe Weather

WARNING

Severe weather or low visibility conditions such as nighttime, strong direct sunlight, heavy fog, snow, rain, or extreme temperatures.

Road Conditions

WARNING

- Unpaved roads, high curvature roads, and off-road terrain.
- Steep grades, rapid grade changes, or uneven road surfaces.

Driving Conditions

WARNING

- Abrupt cut-ins.
- Driving too close to the vehicle in front.
- Turning vehicles ahead.
- Narrow vehicles or objects such as motorcycles, bicycles, lamp posts, or trees.

Lane Safety

Lane safety uses the front-facing camera behind the rearview mirror to provide two features that work together:

- **Lane Departure Warning (LDW)** uses an audio alert, steering wheel vibration, and alert graphic on the driver display that shows if the vehicle moves too close to lane markers or crosses the lane markers without a turn signal on.
- **Lane Keeping Assist (LKA)** momentarily steers the vehicle toward the center of the lane if the vehicle moves too close to the lane markers or crosses the lane markers without a turn signal on.

The Lane Departure Warning status indicator appears on the driver display if the feature is malfunctioning.

IMPORTANT

Keep the windshield and area around the front camera in good condition and clear of any obstructions. Lane safety features may not detect an unintentional lane departure if the front camera is blocked or malfunctions.

WARNING

Lane Keeping Assist and Lane Departure Warning are designed to support the driver and don't replace the driver's attention, judgment, and need to control the vehicle. You're still required to keep your hands on the steering wheel at all times, even with these features turned on.

OPERATING CONDITIONS

Feature	Condition
Lane Keep Assist and Lane Departure Warning	• You're not in Off-Road mode. • Lane markings and road edges are clearly visible. • You're traveling within the activation speed range: 44 to 108 mph (71 to 174 km/h).
Lane Keeping Assist	• You're not in Towing mode. • Lane Departure Warning is turned on.

SETTINGS

Manage the Lane Keeping Assist and Lane Departure Warning features from the Driver+ settings menu on the center display. You can customize the following options:

- **Alert Timing:** Choose how early you'd like to be alerted on lane departure.
- **Alert Type:** Choose sound, steering wheel vibration, or both types of alerts.
- **Lane Keeping Assist:** After you enable Lane Departure Warning, toggle Lane Keeping Assist on or off.

> **NOTE**
> If Lane Keeping Assist is on, you may receive alerts to keep control of the steering wheel. Alerts are a combination of visual notification on the driver display, audio chimes, and steering wheel vibrations. Alerts gradually increase in length and intensity if your hands aren't on the steering wheel.

ENVIRONMENTAL AND DRIVING CONDITIONS

Lane Keeping Assist and Lane Departure Warning may not work as expected in certain environments and driving situations. The features may either not warn or provide a false warning under such conditions that include, but are not limited to, the following:

Severe Weather

> **WARNING**
> Severe weather conditions such as strong direct sunlight, heavy fog, snow, rain, or extreme temperatures.

Blocked Equipment

WARNING

- The front camera or sensors are blocked with things such as mud, dirt, snow, or ice.
- The windshield has become fogged or damaged.

Road Conditions

WARNING

- Sharp curves, hilly roads, or uneven road surfaces.
- Unclear road markings because of faded line marks and shadows over roads.

OFF-ROAD DRIVING

Air Down Tires

Reduce the air pressure in your tires before you go off road to improve traction, help prevent tire damage, and minimize trail surface wear.

CAUTION

The 20-inch wheels with all-terrain tires are recommended to maximize off-road capability. Use caution when driving off road with the 21-inch or 22-inch wheel packages to prevent wheel and tire damage.

To support the vehicle's weight, inflate tires to the recommended minimum tire pressure (or higher) to prevent damage to the vehicle.

The following minimum tire pressure levels are recommended in Soft Sand mode and Rock Crawl mode. These minimum levels are also recommended in other off-road drive modes on rough terrain or deep snow.

Tire Size/Type	Off-Road Tire Pressure (Recommended Minimum)
20-inch All-Terrain	31 psi (213 kPa)
21-inch All-Season	31 psi (213 kPa)
22-inch All-Season	34 psi (234 kPa)

NOTES

- Remember to increase tire pressure before you return to the road.
- Use the air compressor to inflate the tires.
- Use the tire sealant kit and optional spare tire if you need to seal or change a flat tire.

CAUTION

Extreme track or off-road driving may cause wear or damage to some components, such as the brakes or suspension. Contact Rivian for an underbody inspection.

Drive Across Water

The vehicle can cross water up to 39 in (1 m) deep at up to 5 mph (8 km/h).

CAUTION

Follow these guidelines to prevent damage to the vehicle.

Don't drive in crosscurrents.

ASSESS THE TERRAIN

- Check the water depth and ground surface before you drive into an area covered in water.
- Be aware of obstacles or debris underwater.

PREPARE THE VEHICLE

- Go to **Drive Modes** in the center display. Choose **Off-Road All-Terrain**. Then choose **Highest** under **Ride Height**.
- Distribute gear evenly between the front trunk, Gear Tunnel, and the truck bed to optimize traction.

  NOTE

  Gear in the truck bed may get wet.

- Close the doors, front trunk, Gear Tunnel, and spare tire compartment.
- Leave the windows open to ensure an easy exit in case of an emergency.

CROSS THE WATER

- Enter the water slowly and maintain a steady speed without stopping.
- Don't let water submerge the hood and avoid driving at a speed that causes water to splash over the hood.

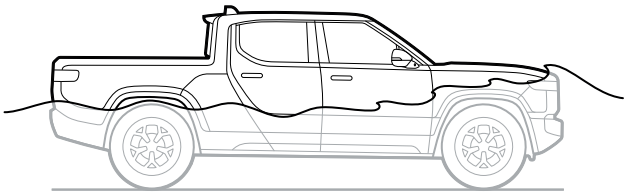

- Drive a short distance away from the water after crossing and test your brakes to ensure they work normally.
- Press and hold the horn for two seconds to clear any water. Repeat four more times. If the horn doesn't work normally on the fifth press, allow time for the horn to dry out.

Charging and Range

CHARGE THE VEHICLE

Find a Charger

The most convenient way to charge the vehicle is with a Rivian Wall Charger installed at home (available separately). You can also use your Rivian Portable Charger, which plugs into a power outlet.

Charge the vehicle during trips with any of these options:

- **Rivian Adventure Network:** The Rivian Adventure Network will provide DC fast chargers on popular routes across the USA and Canada. The network will also extend into more remote destinations.
- **Rivian Waypoints:** Rivian Waypoints will provide AC chargers at public locations, such as shops, restaurants, hotels, and parks.
- **Third-party public chargers:** You can charge the vehicle at any public charger with a J1772 or CCS plug. Public chargers may need third-party payment or may have use restrictions. Follow the instructions at the charger.

Use Navigation to identify locations to charge your vehicle.

Purchases and payments for charging are subject to Rivian's Charging Terms and Conditions located at https://www.rivian.com/legal.

Start a Charge Session

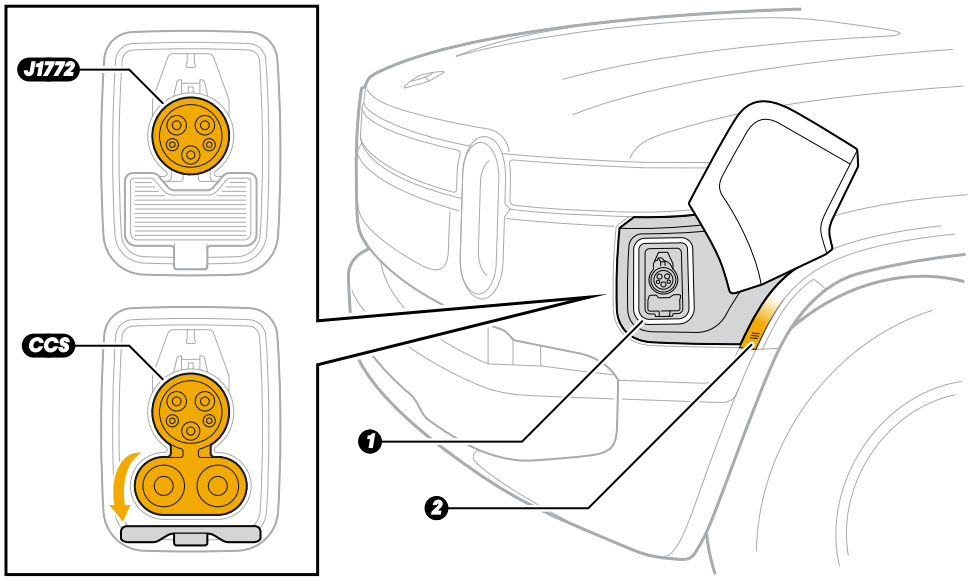

Item	Description
1	Charge port status light
2	Charge port door sensor

Start a charge session as follows:

1. Park at the charger and put the vehicle in **Park**.
2. Open the charge port door. Choose **Open Charge Port** from the center display or touch the charge port door sensor.
3. Get the charge cable.
   - If using a public charger, follow any third-party instructions to release the charge cable and start charging.
   - If using your Portable Charger, plug it into a power outlet before you insert the plug into the vehicle.
   - If using a DC fast charger, lift the vehicle's DC charge port cover before you insert the plug into the vehicle.
4. Align the charge plug to the vehicle's charge port. Fully insert the plug into the port. The vehicle starts to charge automatically.

Set the Charge Amperage

To reduce the level of current that the vehicle draws while charging at home, change the amperage setting.

1. Go to **Energy**.
2. Select the appropriate amps value.

> **NOTE**
> When the vehicle completes its charge session, the amperage setting resets to the maximum value if you haven't set a charge schedule or you're away from home.

Set the Charge Limit

You can set the charge limit to optimize range, charge time, and battery health depending on your driving needs.

1. Go to **Energy** and tap the charge limit bar.
2. Choose the **Custom, Daily**, **Extended**, or **Max** charge limit**.**
   - Custom: Charge to a limit between 50% and 100% based on your own driving and charging preferences. Tap and slide the charge limit bar to change the setting.
   - Daily: Charge to 70% for daily driving and a shorter charge time.
   - Extended: Charge to 85% to travel farther on a single charge.
   - Max: Charge to 100% for maximum range.

Charging speed slows when the battery is almost fully charged. Set a lower charge limit for a shorter charge time if you don't need maximum range.

Regenerative braking may be reduced temporarily when the vehicle battery is fully charged or almost fully charged.

Check Charge Status

The charge port light color indicates the charging status.

Charge Port Light Color	Status
White (solid)	Ready
White (pulsing)	Starting to charge
Green (pulsing)	Charging
Green (solid)	Charge complete
Blue (solid)	Charge scheduled
Red (solid)	Not working

IMPORTANT

If the light is red, unplug the charger and plug it in again. Refer to the charger instructions for additional details and contact Rivian if it still doesn't work.

The light bars at the front and rear of the vehicle indicate the charging status. They pulse green when the vehicle is charging, stay green when the vehicle is at full charge, and turn off when the vehicle is locked or sleeps.

The battery icon indicates the charging status:

- Lightning bolt indicates charging is in progress.
- Green battery icon indicates charging is complete.

Charge session details indicate the following:

- Charge rate (mi/hr, km/hr, or kW) and energy added (mi, km, or kWh)
- End time or time remaining

You can view a charge session summary or edit the charge session details in the center display.

Check Time to Charge

While the vehicle is charging, you can view data such as charging progress, time left to charge, and estimated range on the center display or in the mobile app.

Time to charge varies depending on the following:

- Power voltage
- Current
- Air temperature outside the vehicle
- Battery temperature and preconditioning

Stop a Charge Session

IMPORTANT

- When you use a DC fast charger, stop charging before you remove the charge plug from the vehicle's charge port.
- When you use the Rivian Wall Charger, Rivian Waypoints, or a public AC charger, the charge plug is locked when the vehicle is locked. The charge plug unlocks when charging is complete. Unlock the vehicle before you remove the charge plug if charging is not complete.
- When you use the Rivian Portable Charger, the charge plug is locked when the vehicle is locked. Unlock the vehicle before you remove the Portable Charger from the vehicle's charge port.

Stop a charge session as follows:

1. Unlock the vehicle.
2. Choose **Stop Charging** from the center display.
3. Press the button on the plug handle and pull on the handle to remove the charge cable.
4. Return the charge cable to its storage location.

> **NOTE**
> Store the charge cable neatly to prevent a tripping hazard. Keep the cable loosely coiled and avoid sharp bends.

Set a Charge Schedule

A charge schedule helps you benefit from off-peak electricity rates or to stagger charging times between multiple vehicles.

1. Park at the location where you want to set a charge schedule.
2. Go to **Energy**.
3. Under **Charge Schedule**, choose **On.**
4. Select the days to charge.
5. Select the times to start and stop charging.

To stop the charge schedule, choose **Off** under **Charge Schedule.**

> **NOTES**
> - The charge schedule pauses when you are away from the saved location.
> - If you set the charge amperage when you set a charge schedule, the vehicle saves the setting for future scheduled charge sessions.

RANGE

Range Estimates

Range is an estimated value measured in either the distance the vehicle can travel before it needs to charge or the percentage of battery charge remaining.

The range estimate in the driver display is calculated based on your vehicle configuration and your driving history in each drive mode.

Compare range estimates as follows:

1. Go to **Energy.**
2. Choose **Range based on**.

> **NOTE**
> You can also choose **Reset History** to clear your driving history and restore default data.

View your efficiency in the driver display as follows:

1. Long-press the left or right thumb control buttons on the left side of the steering wheel.
2. Cycle through the tire pressure values and navigation map until you see the efficiency graph.

Set the units to show range in the driver display as distance, percentage, or both:

1. Go to **Settings**, and then choose **Vehicle**.
2. Choose **Units**. Under **Range in Driver Display**, choose **mi**, **%**, or **Both**.

Effects on Range

To extend range, do the following:

- Inflate tires to the recommended pressure. (See Tires.)
- Use regenerative braking instead of the brake pedal to slow the vehicle. (See Brakes.)
- Choose **Conserve** mode for longer distances. (See Drive Modes.)
- Choose **Lowest** ride height at higher speeds and **Low** ride height at lower speeds for increased range and efficiency. (See Ride Height.)
- Keep the windows closed.

Be aware of the following factors that may reduce range:

- Excessive speed
- Aggressive acceleration
- Extreme temperatures
- Steep hill climbs
- High wind conditions
- Towing and cargo (See Towing a Trailer.)
- Off-road drives and off-road drive modes (See Drive Modes.)
- Driving habits
- Road quality
- Heating and cooling the cabin (See Climate Control.)
- Charging accessories like phones or laptops

Low Battery

When the vehicle battery is low, charge as soon as you can. The vehicle gradually reduces its power consumption when the vehicle battery is very low.

Battery Status	Recommendation	Effect on Vehicle
Battery low	Find a charger or turn on **Conserve** mode.	Battery icon turns yellow.
Battery very low	Find a charger or turn on **Conserve** mode.	Battery conditioning slows.
Battery almost empty	Charge the vehicle.	Battery conditioning stops.
Battery empty	Bring the vehicle to a safe stop if a charger is not in range and contact Rivian.	Propulsion system begins to shut down. Accessory power (climate control, phone charging, etc.) is only available for a short time before the vehicle shuts down completely.

CAUTION

- If your battery is almost empty, charge the vehicle immediately.
- If you leave the vehicle unplugged for an extended time, it may require a jump start or replacement of the 12 V batteries.
- If you leave the vehicle unplugged for an extended time, it may damage the vehicle battery permanently.
- If you can't charge the vehicle, contact Rivian.

DANGER

Never attempt to open or tamper with the vehicle battery. Contact Rivian for battery service.

Battery Life

To maximize battery life beyond the vehicle warranty, do the following:

- Avoid completely draining the battery.
- Use **Daily** for everyday driving. Use **Max** for longer drives.
- Accelerate moderately. Drive at a steady speed.
- Use your Rivian Wall Charger or a Rivian Waypoints Charger whenever possible.
- Leave the vehicle plugged in if you don't plan to drive for a long time. When parked, the vehicle uses some power to maintain battery health.

The vehicle battery may lose some capacity over its lifetime. See your vehicle warranty for details.

PORTABLE CHARGER

Important Safety Instructions

DANGER

Before you use the Rivian Portable Charger, read all the instructions. Follow the safety instructions and warnings in this guide to reduce the risk of fire, electrical shock, serious injury, or death.

PRECAUTIONS

Instructions Pertaining to a Risk of Fire or Electric Shock

DANGER

WARNING — When using electrical products, basic precautions should always be followed, including the following. This guide contains important instructions for model PT00045331 that shall be followed during installation, operation, and maintenance of the unit.

- Don't use the Portable Charger outside of the guidelines detailed in this guide.
- The Portable Charger works with Rivian vehicles only. Don't use the Portable Charger for any other purpose or to charge any other vehicle.
- Don't use the Portable Charger if it is defective or damaged in any way or if it doesn't work.
- Don't use the Portable Charger if the controller, the plug, the flexible power cord or EV cable is broken, cracked, or open or shows any other damage.

- Don't tamper with or try to service the Portable Charger by taking it apart. It's not user-serviceable. Contact Rivian for repair.
- Don't twist or place significant strain on the Portable Charger. Don't apply excess force to or impact the Portable Charger controller.
- Don't expose the Portable Charger to flammable or harsh chemicals or vapors.
- Don't use or store the Portable Charger in a recessed area or below floor level. When using the Portable Charger inside, such as in a garage, position the Portable Charger controller at least 18 in (45 cm) above floor level.
- Don't attempt to attach Portable Charger adapters to electrical outlets not listed in this guide.
- Don't plug the Portable Charger adapter into an extension cord, power converter, power strip, or any type of power adapter.
- Don't plug the Portable Charger adapter into a damaged, loose, or worn electrical outlet. Fit the Portable Charger adapter snugly into the electrical outlet socket.
- Only plug the Portable Charger adapter into an electrical outlet that is properly grounded.
- Only unplug the Portable Charger adapter from the electrical outlet after charging is complete.
- Don't plug the Portable Charger into an electrical outlet or unplug it from a power outlet that is underwater or in snow. If the charger is plugged into an electrical outlet, turn off the breaker before unplugging it.
- Don't charge the vehicle if you, the vehicle, or the Portable Charger is exposed to severe weather.
- Don't expose the electrical connectors on the Portable Charger plug, adapter, or controller to moisture or water.
- Don't use the Portable Charger if there is water damage or corrosion.
- Don't allow unsupervised children in the area while the Portable Charger is charging a vehicle.
- Don't place fingers in the vehicle charge port.
- Maximum operating ambient temperature for the Portable Charger is 122°F (50°C).
- Read all instructions before using this product.

GROUNDING INSTRUCTIONS

This product must be grounded. If it should malfunction or break down, grounding provides a path of least resistance for electric current to reduce the risk of electric shock. This product is equipped with a cord having an equipment grounding conductor and grounding plug. The plug must be plugged into an appropriate electrical outlet that is properly installed and grounded in accordance with all local codes and ordinances.

WARNING

Improper connection of the equipment-grounding conductor is able to result in a risk of electric shock. Check with a qualified electrician or serviceman if you are in doubt as to whether the product is properly grounded. Do not modify the plug provided with the product — if it will not fit the outlet, have a proper outlet installed by a qualified electrician.

SAFETY SYMBOLS ON HARDWARE LABELS

The following symbols may appear on labels on the Portable Charger.

Icon	Description
	Risk of Electric Shock
	Danger
	Equipment Ground
	Instruction Manual
	UL Logo

Federal Communication Commission Interference Statement

This device complies with Part 15 of the FCC Rules. Operation is subject to the following two conditions:

1. This device may not cause harmful interference, and
2. This device must accept any interference received, including interference that may cause undesired operation.

This equipment has been tested and found to comply with the limits for a Class B digital device, pursuant to part 15 of the FCC Rules. These limits are designed to provide reasonable protection against harmful interference in a residential installation. This equipment generates, uses, and can radiate radio frequency energy. And, if not installed and used in accordance with the instructions, may cause harmful interference to radio communications. However, there is no guarantee that interference will not occur in a particular installation. If this equipment does cause harmful interference to radio or television reception, which can be determined by turning the equipment off and on, the user is encouraged to try to correct the interference by one or more of the following measures:

- Reorient or relocate the receiving antenna.
- Increase the separation between the equipment and receiver.
- Connect the equipment into an outlet on a circuit different from that to which the receiver is connected.
- Consult the dealer or an experienced radio/TV technician for help.

CAUTION

Changes or modifications not expressly approved by the manufacturer could void the user's authority to operate this equipment.

Parts Diagram

Rivian Portable Charger (PT00045331)

1. Plug
2. Controller
3. Light bar
4. Cable
5. 120 V AC charge adapter
6. 240 V AC charge adapter

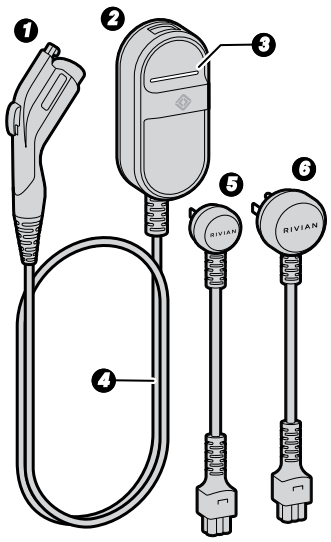

Attach or Remove an Adapter

- To attach an adapter to the Portable Charger, push the adapter connector into the cable controller port until the adapter connector clicks into place.

- To remove an adapter, pull the adapter connector out of the cable controller port.

> **NOTE**
> To carry or move the Portable Charger, lift the controller carefully. Don't carry it by the cable or adapter.

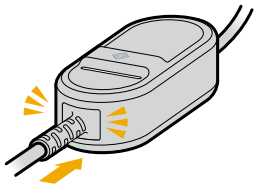

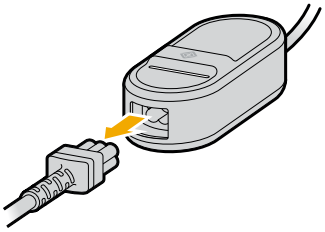

Charging

ATTACH AND CHARGE

1. Plug the Portable Charger adapter all the way into a grounded electrical outlet until it's securely connected and pushed all the way in.

   > **NOTE**
   > If possible, use a dedicated outlet with a single socket. If the outlet has two sockets, don't plug anything into the other socket.

2. Open the charge port door on the vehicle.
3. Plug the Portable Charger into the vehicle's charge port.

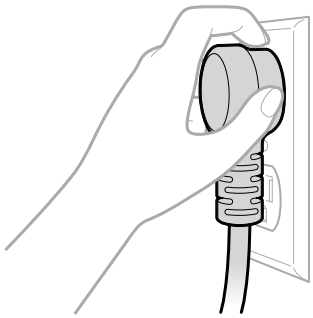

TRACK DURATION OF CHARGE

Charge time can change, depending on:

- Power voltage and current
- Battery temperature
- Ambient temperature

During a charge session, you can see data such as charge progress, time remaining to charge, and mileage estimates on the driver display or in the mobile app.

Use the information in the table below to help calculate charge rates.

Adapter	Current	Voltage	Power
5-15 120 V	12 A	120 V	1.3 kW
14-50 240 V	32 A	240 V	7.6 kW

LIGHT BAR STATES

Light Bar State	Meaning
White (solid)	Available
Green (pulsing)	Charging
Green (solid)	Charging complete
Red (pulsing)	Error
Red (solid)	Error

If the charger displays an error, troubleshoot the issue.

DETACH THE PORTABLE CHARGER

When the vehicle is done charging, press the button on the Portable Charger plug then pull to remove the plug from the vehicle.

User Maintenance Instructions

When you need to clean the Portable Charger, wipe it with a damp cloth. Don't use abrasive substances or materials.

> **NOTE**
> Ensure that you don't get water in the Portable Charger connection points. Follow the safety instructions.

Moving and Storage Instructions

To store the Portable Charger in a single, safe location such as a home garage:

- Plug the cable into a dedicated electrical outlet close to the vehicle parking spot so that the cable easily reaches the vehicle's charge port.
- Secure the cable by hanging the controller on a hook or screw installed on the wall near the outlet.
- Keep the cable plugged into the electrical outlet when not in use to help prevent wear on the Portable Charger plug and the outlet.

To store the Portable Charger, unplug the cable from the electrical outlet, coil the cable while avoiding sharp bends, and place it in the storage bag.

To move or carry the Portable Charger, lift the controller carefully. Don't carry it by the cable or adapter. Try not to drag the cable.

Installation Instructions

To hang the controller for the Portable Charger on a wall:

1. Find a location on the wall near an electrical outlet.
   - For outdoor use, select a location between 24 in (60 cm) and 4 ft (1.2 m) above the ground.
   - For indoor use, select a location between 18 in (45 cm) and 4 ft (1.2 m) above the ground.
2. Install a hook or anchor screw on the wall.

   Follow these steps for an anchor screw:
   - Select a screw with a head that fits into one of the openings on the back of the Portable Charger controller.
   - Install the screw so that the head is far enough away from the wall that it slides easily into the mounting hole when you hang the Portable Charger controller onto it.
3. Hang the Portable Charger controller onto the hook or screw.

Troubleshoot Your Portable Charger

DANGER

Don't tamper with or try to service the Portable Charger by taking it apart. It's not user-serviceable. Contact Rivian for repair.

If this happens	It may be caused by this	Try this
The light bar on the Portable Charger flashes red	Power interruption	1. Unplug the Portable Charger from the electrical outlet. 2. Plug the Portable Charger back into the electrical outlet.
The light bar on the Portable Charger displays solid red	Charger error	Contact Rivian.

Specifications

Specification	Description
Operating voltage range	90–264 (120–240 V nominal) AC single-phase
Operating grid frequency	45–65 Hz
Maximum current	32 A; limited by adapter selected
Cable length	18 ft (5.5 m)
Mechanical and environmental load	UL 2231-1, -2, UL 2594 regulatory standard
Operating temperature range	-22°F to +122°F (-30°C to +50°C)
Storage temperature range	-40°F to +185°F (-40°C to +85°C)
Connector housing dimensions (length x depth x height)	8.86 in x 4.34 in x 2.63 in (22.5 cm x 10.0 cm x 6.7 cm)
Weight	7.1 lb (3.2 kg)
Maximum operating altitude	14,108 ft (4,300 m)
Enclosure type	NEMA Type 6
Ventilation	Not required
Compatible vehicle inlet	J1772
Adapters	NEMA 5-15 120 V / NEMA 14-50 240 V
UL file number	E520745
Product number	PT00045331

Storage and Security

INTERIOR STORAGE

Center Console

The center console is located between the driver and passenger seats. It serves as a storage compartment for small belongings. You can charge your devices on the wireless charger included on the center console. There are also several power outlets available in and around the center console.

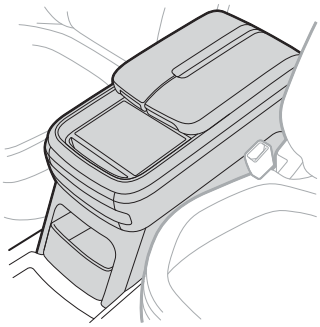

> **NOTE**
> Depending on your vehicle's trim, the center console may vary in design.

CUP HOLDER

Press the metal trim on the forward edge of the center console to pop out the cup holder for use.

STORAGE BIN

Press either of the buttons at the front and center of the console to access the storage bin. Fold the open doors back into place and push down to close the storage bin.

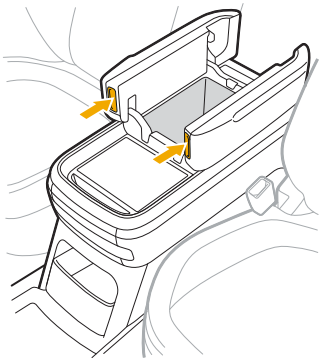

Rear Seat Armrest

When the middle seat in the second row is not occupied, you can pull down the rear seat armrest. The rear seat armrest contains two cup holders. Remove the cup holder liner to clean it.

When the armrest is down, you can access the Gear Tunnel from inside the vehicle cabin by sliding up the door behind the armrest.

> **NOTE**
>
> Since contents in the Gear Tunnel may shift when the vehicle is in motion, open the Gear Tunnel door only while the vehicle is parked.

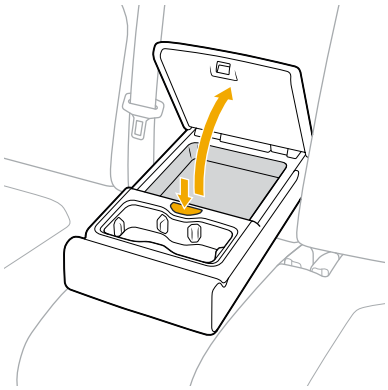

Press the button behind the cup holders to access a small storage bin on the rear seat armrest. Push the lid back in place to close the bin.

Door Pockets

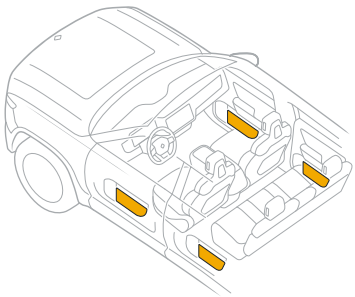

Front and rear doors contain hinged storage pockets to hold your belongings. Pull the pocket away from the door to expand it and store larger items. The front door pockets can hold a larger one-liter water bottle.

> **NOTE**
>
> Don't put bulky items in the door pockets that could prevent the door from closing, or that could touch the side of the seat when you close the door. Securely seal all liquid bottles or containers before you place them in door pockets to prevent spills.

Seat Back Pockets

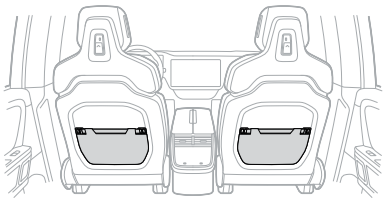

The vehicle's front seats provide seat back pockets that expand to hold your belongings.

> **NOTE**
>
> Don't store bulky items that may hinder the movements of passengers in the back row or the proper installation of child seats.

Under-Seat Storage

FRONT ROW

A storage drawer is located under both the driver and front passenger seats, best for holding a standard smartphone. Pull the latch to access the storage drawer, and push the drawer back in to securely close.

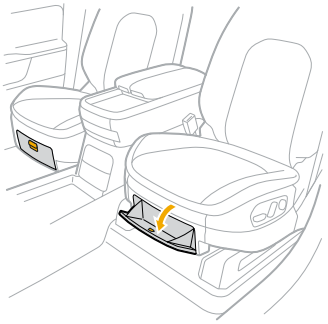

> **NOTE**
>
> The maximum weight capacity of the under-seat storage drawer is approximately 0.5 lb (230 g).

BACK ROW

A storage bin is located under the seats in the back row. Store objects such as reusable grocery bags and flat, lightweight sports equipment.

To access the bin, grab the plastic trim near the back cushion and flip up the seats.

Push the seat firmly back into place to secure it before seating passengers or driving the vehicle.

> **NOTE**
>
> The size of the back row storage bins may vary, depending on your vehicle's trim.

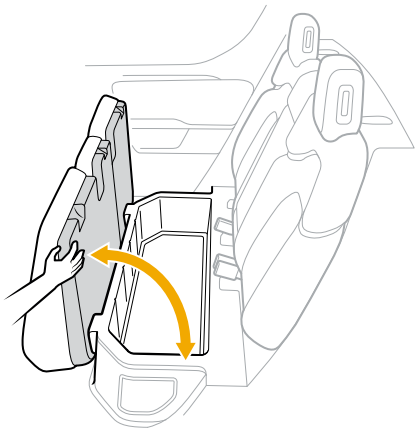

> **CAUTION**
>
> Don't store bulky or heavy items that may damage the storage bin if they roll or move around significantly while the vehicle is in motion. Stored items should fit inside the bin and allow the bin to close securely.

EXTERIOR STORAGE

Protect Your Gear

Secure your gear and protect it from the elements in the storage locations listed below.

Storage Location	Lockable?	Waterproof?
Front trunk	Yes	Yes
Spare tire compartment	Yes	No
Gear Tunnel	Yes	Yes
Back-row under-seat storage	Yes	Yes
Tonneau cover	Yes	No

Front Trunk

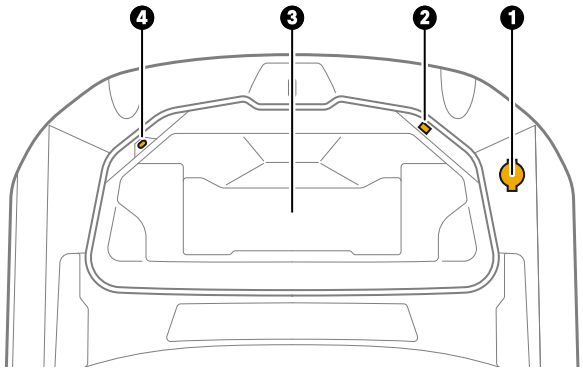

Item	Description
1	Windshield washer fluid
2	Entrapment button
3	Charge accessories (under panel)
4	12 V outlet (if equipped)

USE THE FRONT TRUNK

Open or close the hood to access the front trunk using one of the following:

- Key fob
- Button on the front fascia
- Center display
- Entrapment button inside the front trunk

OPEN OR CLOSE THE FRONT TRUNK WITH THE KEY FOB

Press the front trunk button on the key fob twice to open or close the hood.

> **NOTE**
> To pause the hood while it opens or closes, press the front trunk button once. To reverse the door, press the front trunk button twice again.

OPEN OR CLOSE THE HOOD WITH THE FRONT TRUNK BUTTON

Follow these steps to use the front trunk button to open the hood:

1. Unlock the vehicle.
2. Press the button on the front fascia once.

> **IMPORTANT**
> Before you drive the vehicle, close the hood completely so that it is flush with the vehicle. If you drive the vehicle with the hood open, the vehicle significantly limits the maximum speed for safety reasons.

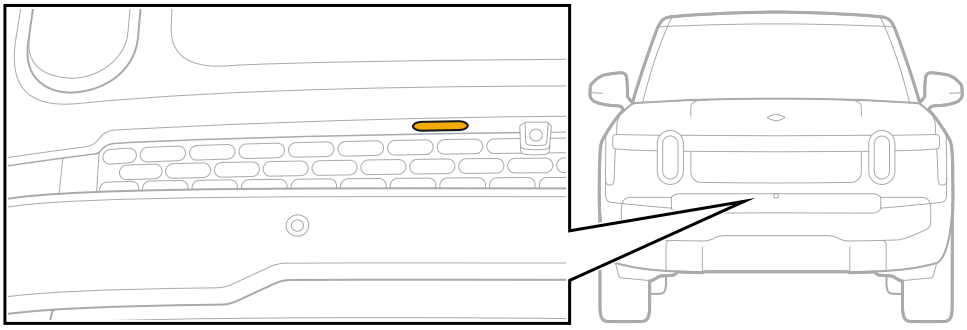

USE THE FRONT TRUNK ENTRAPMENT BUTTON

IMPORTANT

Don't go into the front trunk. It isn't intended to hold people.

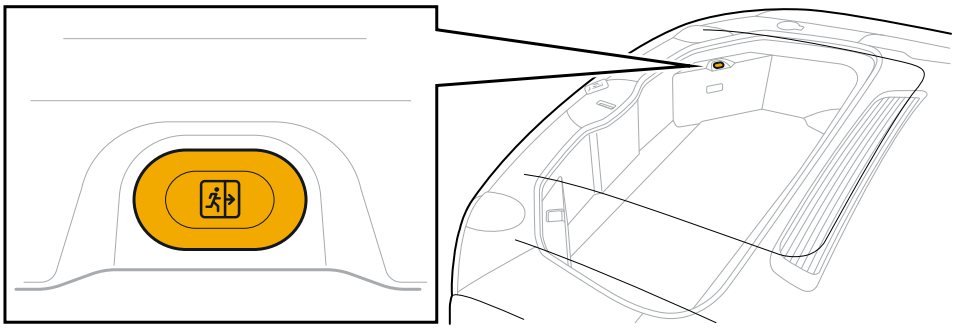

The entrapment button inside the front trunk glows in the dark for visibility. If someone is trapped inside the hood, that person can press the entrapment button to open the front trunk while the vehicle is parked. The entrapment button won't work if the batteries are dead. Refer to instructions on how to open the hood manually for details.

IMPORTANT

The entrapment button won't release the hood door if the vehicle is in Drive, Neutral, or Reverse. If someone presses the entrapment button, a notification appears on the driver display. Prepare to park the vehicle immediately. After you park the vehicle, open the hood.

Spare Tire Compartment

You can order a full- or compact-size spare tire from Rivian at additional cost or you can obtain one on your own.

Access the spare tire compartment in the truck bed.

1. Ensure that the truck bed is empty, and that there aren't any objects on the lid.

   NOTE

   Unlock and remove the rear Cargo Crossbar if needed.

2. Open the tailgate.
3. Lift the release lever to open the spare tire compartment lid.

4. Push the spare tire compartment lid to a vertical position to remove or replace the spare tire.

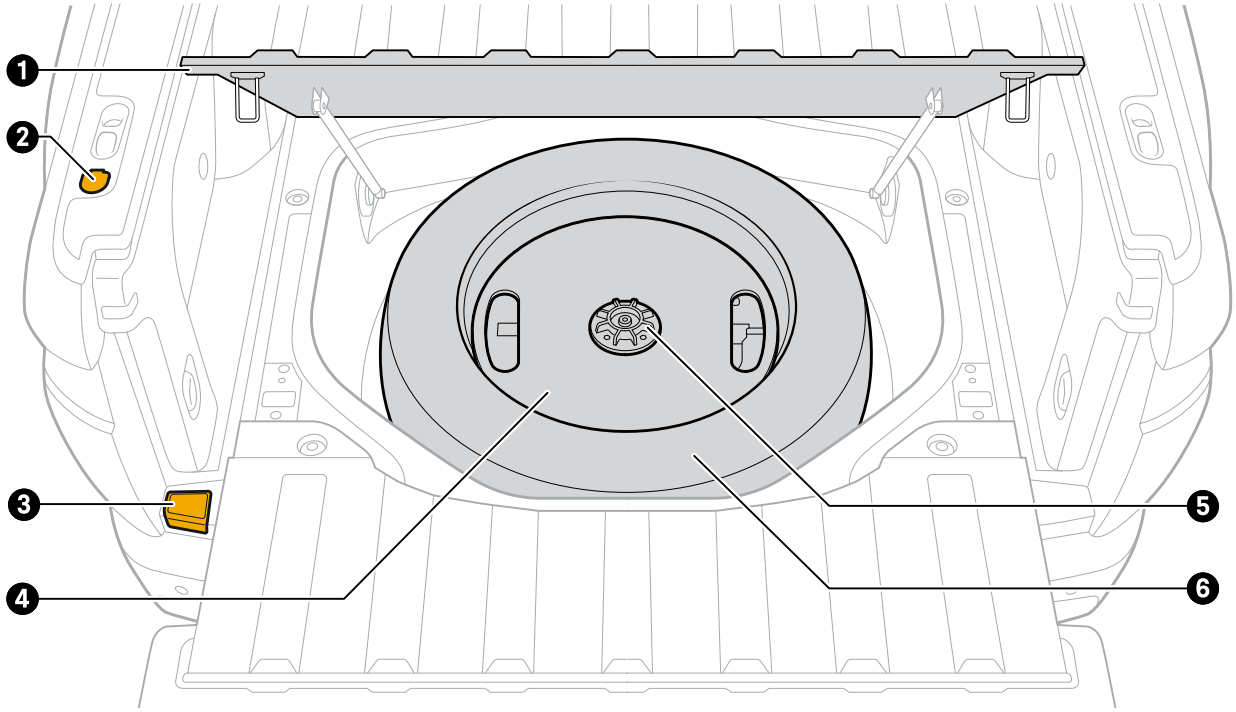

Item	Description
1	Spare tire compartment lid
2	Tailgate release button
3	Spare tire compartment release lever
4	Tire service kit
5	Spare tire wing nut
6	Spare tire

Remove the tire service kit and retention rod before you remove the spare tire.

1. Unfasten the spare tire wing nut and remove the tire service kit.
2. Use the hex hole on the spare tire wing nut to unscrew and remove the retention rod.

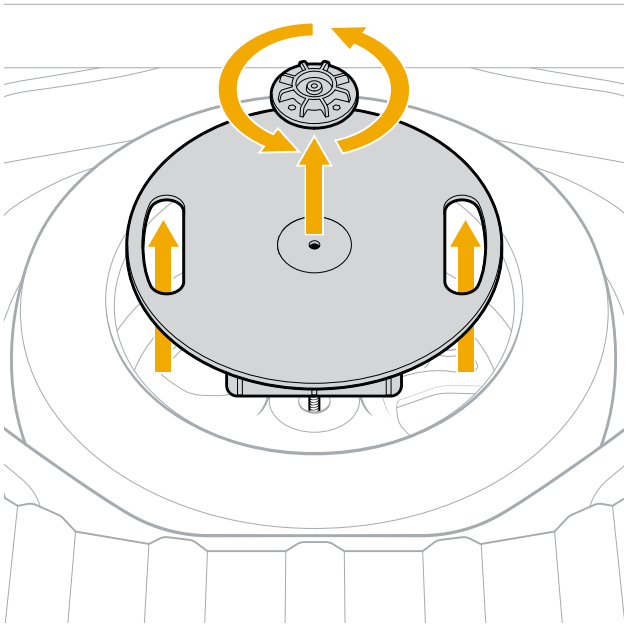

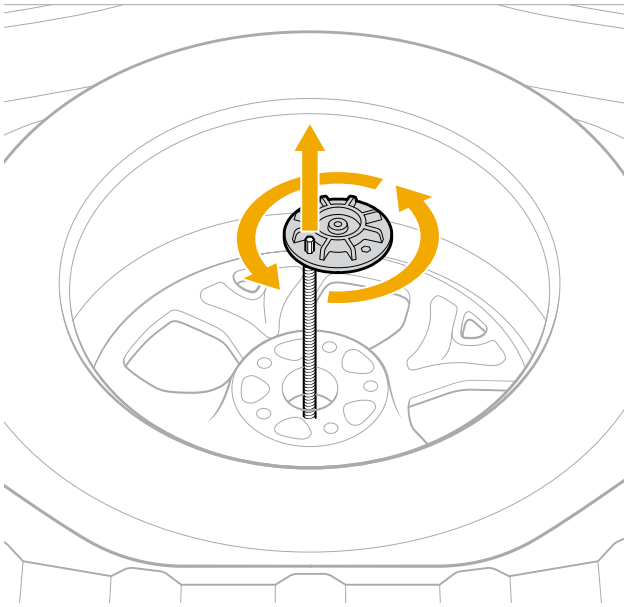

3. Save the wing nut and retention rod for reinstallation.

Cargo Crossbars

> **NOTE**
> This is an optional Adventure Gear product. Learn more at rivian.com.

The Cargo Crossbar set includes:

- 2 crossbars
- 2 locking keys

INSTALL THE CROSSBARS

The vehicle has accessory ports on its roof. Vehicles with truck beds have additional accessory ports on the truck bed rails.

> **CAUTION**
> - Carefully handle the Cargo Crossbars and heavy accessories to avoid breaking or damaging the glass roof panels.
> - Ask a friend to help install the crossbars on the roof.
> - Remove accessories from the crossbars before you mount the crossbars on the vehicle.

1. Adjust the width of the crossbars by extending them over the accessory ports on the vehicle.
2. After you adjust the crossbar width, lift up the crossbar paddle while setting the crossbar into the accessory port. You should hear one click.

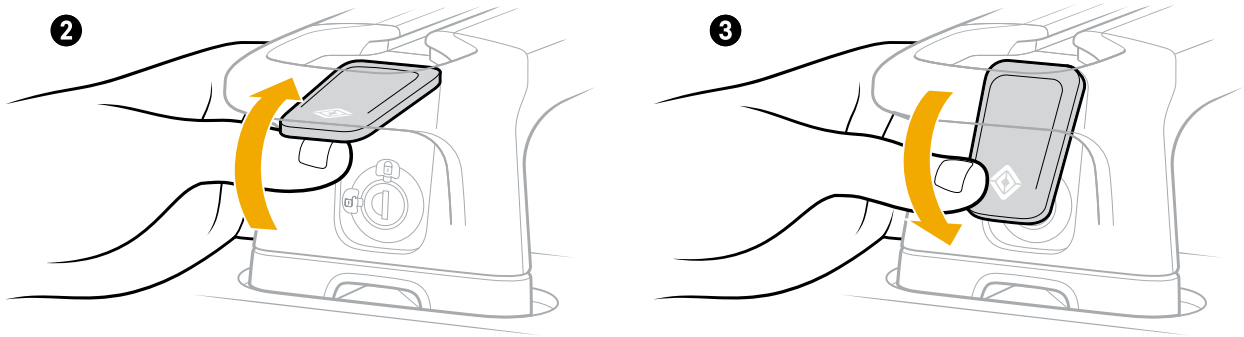

3. Center the crossbar in the accessory port, then push the paddle down until you hear a second click. You may need to apply some additional downward force to fully latch the crossbar into the accessory port.

> **IMPORTANT**
> If you don't hear two clicks, the crossbar may not be latched. Reinstall the crossbar in the accessory port.

4. Repeat steps 2 and 3 to latch the remaining crossbar ends into the accessory ports.

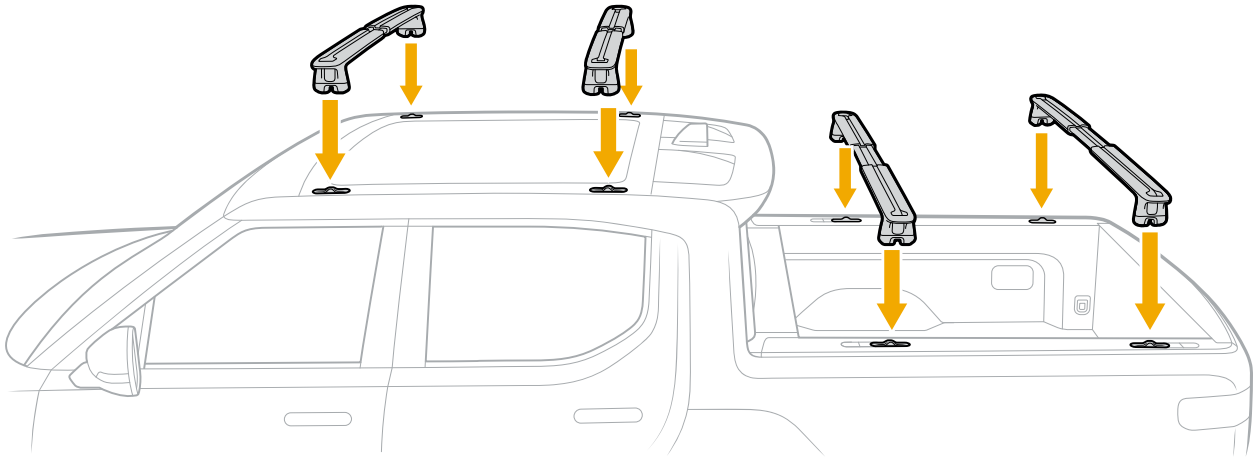

LOCK THE CROSSBARS

1. Lock the crossbars with the key by turning clockwise.

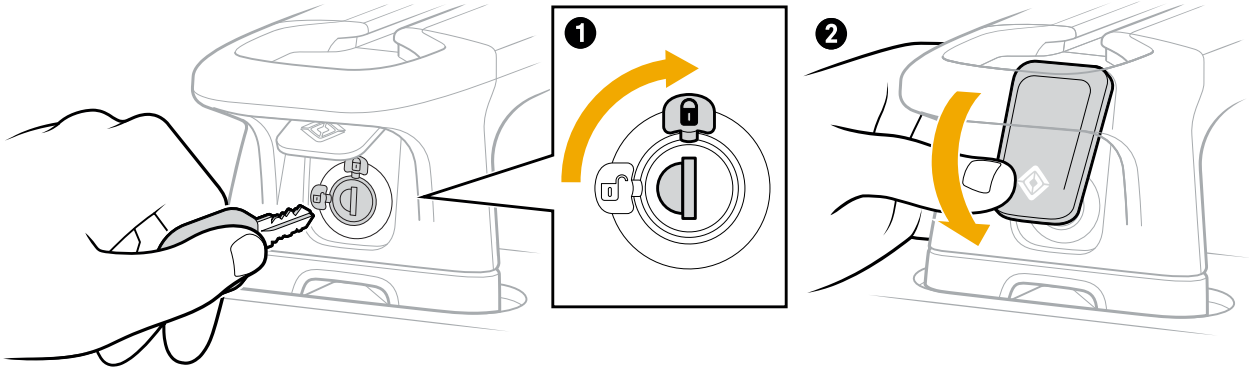

2. Push the crossbar paddle all the way down to cover the lock cylinder.
3. Repeat steps 1 and 2 on the remaining crossbar ends to ensure the crossbars are fully locked.

WARNING

- Secure crossbars and loads before and after driving, especially when you travel through rough terrain. Loose crossbars and unsecured loads could cause a serious crash.
- Don't drill holes in the crossbars. Only use manufacturer recommended parts and accessories.
- Modifications or accessories not provided by the manufacturer will void the manufacturer's warranty. The owner assumes liability for any damage or crashes caused by unauthorized modifications.

CROSSBAR LOADING

WARNING

- Don't exceed the maximum specified load for the Cargo Crossbars.
- Be aware of overall vehicle payload capacities when you load the Cargo Crossbars.
- Refer to the Tire and Loading Information label and Load Carrying Capacity Modification label (if included) on the driver's door pillar for the maximum allowable vehicle payload.

- The maximum dynamic (driving) load is 250 lbs (113 kg) per crossbar pair.
- The maximum static (parked) load is 780 lbs (353 kg). For example, when the vehicle is parked at a campsite with a rooftop tent, the maximum roof load is 780 lbs (353 kg) per crossbar pair.

Evenly distribute the load on the crossbars. Maintain a low center of gravity for the load.

DANGER

Any load that extends over the windshield must be secured to the front and rear of the vehicle, in addition to the Cargo Crossbars. Failure to do so can result in property damage, personal injury, or death.

REMOVE THE CROSSBARS

1. Push up the crossbar paddle halfway to access the lock.
2. Unlock the crossbar with the key.
3. Lift the paddle while you raise the crossbar to disengage the crossbar from the accessory port.

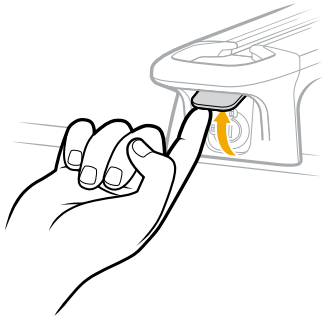

4. Repeat steps 1 to 3 for the remaining crossbar ends. Carefully remove the crossbars from your vehicle.

MAINTENANCE

Clean the crossbars with a solution of water and standard car wash liquid. Don't use cleaners that contain bleach, ammonium, or alcohol. Remove the crossbars when not in use.

CROSSBAR LATCH TUNING

Over time, the crossbar latching mechanism may need adjustment. Contact Rivian if the crossbar doesn't securely latch in the accessory ports.

Tailgate

The tailgate folds down flat and locks or unlocks simultaneously when you lock or unlock the vehicle.

USE THE TAILGATE

Open the tailgate with one of the following:

- Key fob
- Button on the exterior bed rail
- Center display
- Rivian app
- Entrapment button inside the truck bed

NOTE

The only way to close the tailgate is to manually close it.

CAUTION

- Don't exceed the weight limit of 1000 lbs (453 kg) on the open tailgate.
- Remove any items from the tailgate before closing. Items can slip underneath the tailgate gap cover.

OPEN THE TAILGATE WITH THE KEY FOB

Press the tailgate button on the key fob twice to unlatch the tailgate.

OPEN THE TAILGATE WITH THE TAILGATE BUTTON

Press the tailgate button on the exterior bed rail to open the tailgate. The tailgate unlatches and slowly opens.

NOTE

Since the tailgate uses gravity to open, it won't open if the car points downhill. In this case, you'll need to open the tailgate manually after you press the button.

If you have a power tonneau cover, use this button.

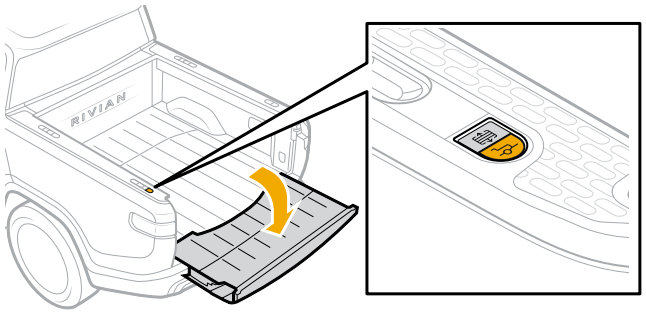

If you don't have a power tonneau cover, use this button.

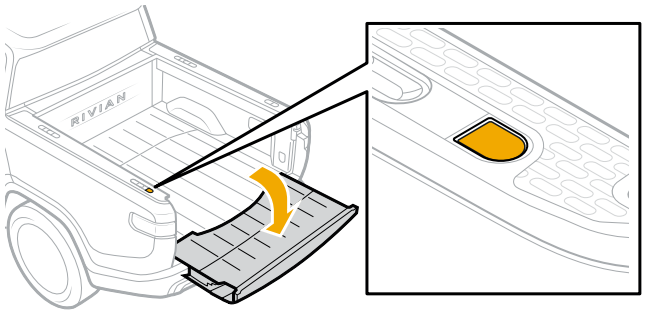

OPEN THE TAILGATE WITH THE CENTER DISPLAY

To open the tailgate with the center display, do the following:

1. Go to **Access and Security** on the center display.
2. Choose the tailgate button.

OPEN THE TAILGATE WITH THE RIVIAN APP

To open the tailgate with the Rivian app, do the following:

1. Press the tailgate button on the app.
2. Choose **Confirm**.

OPEN THE TAILGATE WITH THE ENTRAPMENT BUTTON

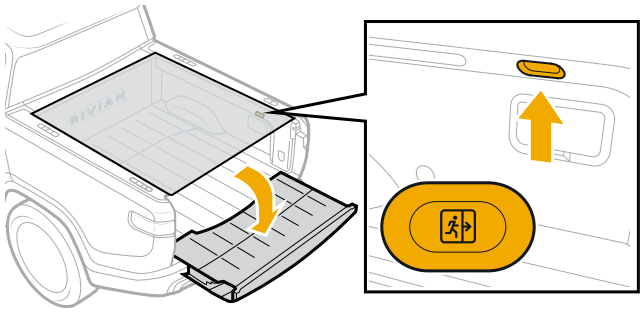

The entrapment button in the truck bed glows in the dark for visibility. If the vehicle is parked and someone is trapped inside the truck bed, they can press the entrapment button to open the tailgate.

IMPORTANT

The entrapment button won't release the tailgate if the vehicle is in Drive, Neutral, or Reverse. If someone presses an entrapment button, a notification appears on the driver display. Prepare to park the vehicle immediately. After you park the vehicle, open the tailgate.

Truck Bed

CAUTION

The truck bed won't remain dry if you drive in water that's higher than the truck bed floor. If you plan to drive your Rivian R1T in deep water or snow without a tonneau cover, ensure that the equipment in your truck bed can withstand contact with water.

Accessory Ports and Cargo Tie-Downs

The vehicle has accessory ports on the truck bed rails and on its roof. There are four integrated cargo tie-downs in the truck bed.

CAUTION

- Carefully handle all cargo to avoid breaking or damaging the glass roof panels. Avoid securing items to the roof accessory ports.
- Objects secured to the vehicle may shift as you drive. Secure your cargo to avoid damage or loss of objects.

USE THE ACCESSORY PORTS

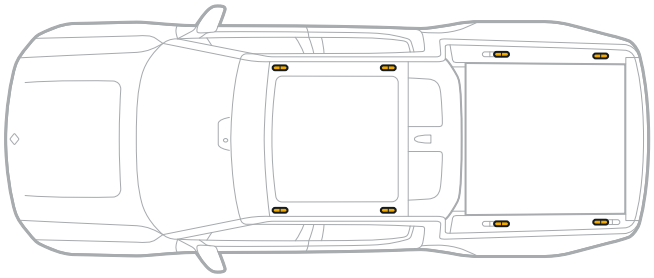

The accessory ports allow you to install Cargo Crossbars. The crossbars are compatible with various accessories such as bike mounts, rooftop tents, and kayak mounts. The accessory ports can also be used as tie-down points for cargo.

CARGO TIE-DOWNS

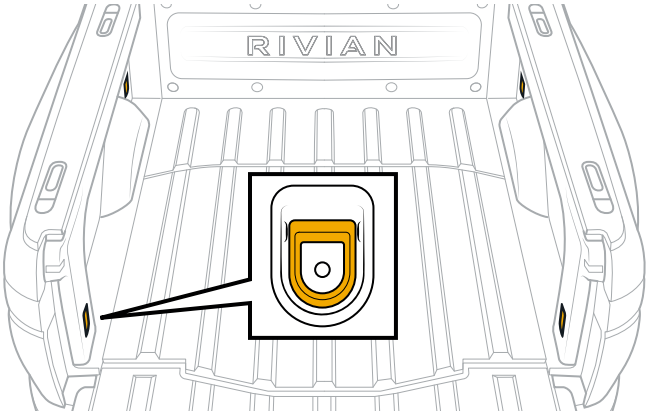

The integrated cargo tie-downs are located in the corners of the truck bed walls. Use the cargo tie-downs to prevent cargo from moving and sliding. Secure cargo to both sides and distribute weight evenly across the bed.

Powered Tonneau Cover

The optional powered tonneau cover provides lockable storage for your gear and protects against light weather.

CAUTION

The power tonneau cover is not watertight.

Use the front trunk, Gear Tunnel, or the rear storage to protect your gear from water.

If you have the manual tonneau cover, use these instructions.

OPEN THE POWERED TONNEAU COVER

If equipped, use one of the following to open and close the tonneau cover:

- Button on the exterior bed rail
- Center display

> **NOTE**
> If the tonneau cover detects an obstacle while it opens or closes, it will stop. You can enable or disable the powered tonneau cover by selecting **Settings › Vehicle › Access** on the center display.

> **CAUTION**
> Don't sit, stand, or place heavy objects on the tonneau cover. Don't secure objects directly to the tonneau cover.

USE THE TONNEAU COVER BUTTON

Press the tonneau cover button on the exterior bed rail one time to open or close the powered tonneau cover.

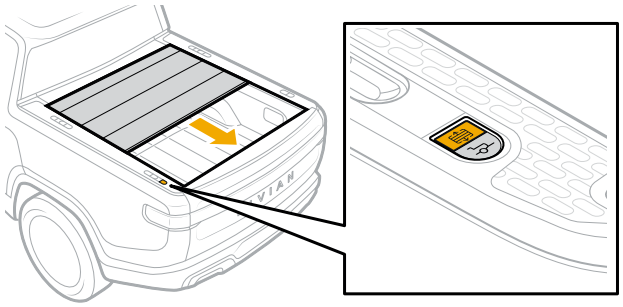

> **NOTES**
> - Press the tonneau cover button on the truck bed to pause the cover. Press the button again to reverse the cover.
> - To partially open or close the powered tonneau cover, press and hold the tonneau cover button and then release the button to stop. Press the button again to reverse the cover.
> - The tonneau cover button is only available on vehicles that are equipped with a powered tonneau cover.

OPEN OR CLOSE THE POWERED TONNEAU COVER WITH THE CENTER DISPLAY

1. Go to **Access and Security** on the center display.
2. Choose the tonneau cover button to open or close the powered tonneau cover.

> **NOTE**
> If the tonneau cover button is deactivated (grayed out) you can activate it by selecting **Settings › Vehicle › Access** on the center display.

RESET THE POWERED TONNEAU COVER

To reset the powered tonneau cover, select this option from the center display or use the tonneau cover button on the truck bed for a manual reset.

Reset from the Center Display

The system notifies you if you need to reset the powered tonneau cover. When that happens, you can either reset the tonneau cover or run the reset procedure later.

> **NOTE**
> You can't operate the powered tonneau cover until you reset it.

> **WARNING**
> Ensure the path of the powered tonneau cover is free from obstructions before you perform the reset procedure.

Manual Reset Using the Powered Tonneau Cover Button

1. Press, press, press, then press and hold (● ● ● ▬) the tonneau cover button to start the manual reset.
2. Wait for the calibration to complete. Check for a notification on the center display.

> **NOTE**
> Contact Rivian if the powered tonneau cover reset was unsuccessful.

Manual Tonneau Cover

The optional manual tonneau cover provides lockable storage for your gear and protects against light weather.

> **CAUTION**
> The tonneau cover is not watertight.
> Use the front trunk, Gear Tunnel, or the rear storage to protect your gear from water.

If you have the powered tonneau cover, use these instructions.

INSTALL THE MANUAL TONNEAU COVER

The manual tonneau cover comes in four sections. The sections lock together for a tight fit. One panel (4 in the illustration) has latch pins to hold the tonneau cover in place and a release handle. Install this panel last.

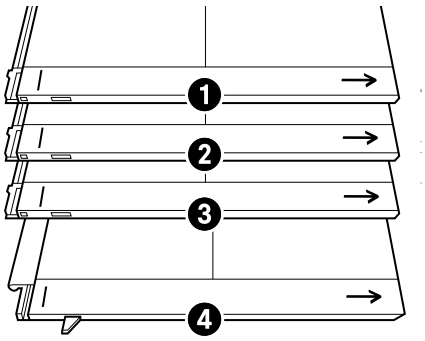

NOTE

You can install fewer than all four panels if you want partial coverage of your truck bed. Be sure to use the panel with the latch pins and release handle as the final panel. The latch mechanism works with any number of panels in place.

Store the tonneau cover in its cloth bag when not in use. Use the interior dividers between panels to keep them free from wear. If you are storing the tonneau cover bag in the gear tunnel, be sure to remove it carefully to avoid damaging the gear tunnel door trim.

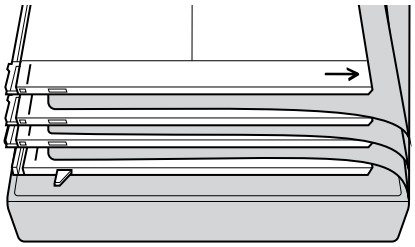

CAUTION

- Install the panels in the correct direction (arrows facing toward the front of the vehicle, lines in back) and be sure the panels are securely locked together before sliding them forward.
- Don't apply excessive force.
- Be sure to install the panel with the locking pins and release handle last. Close the tailgate to create a tight seal to keep out most water and other items.

1. Place the cloth bag on the bed and open it.
2. Remove one of the panels (without a handle) from the tonneau cover bag.

3. Slide the panel forward in the side rails until most of the panel is inserted.

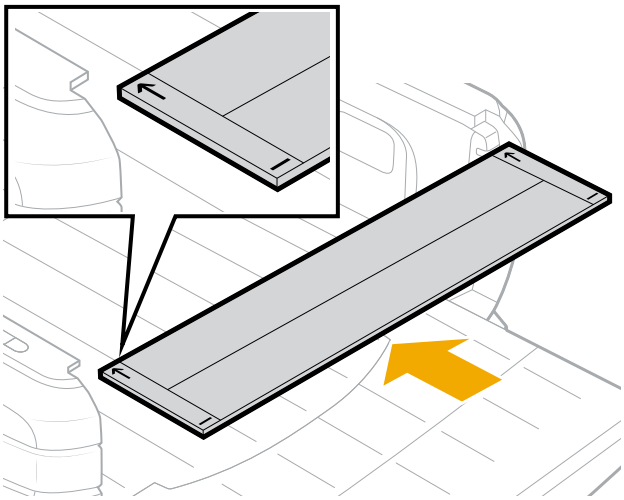

> **NOTE**
> Be sure the arrows on the corners are visible and facing toward the front of the vehicle before inserting the panel into the side rails. While connecting the panels, leave the line icon at the back corner visible to enable locking in the next panel outside of the side rails.

4. Align another panel (without a handle) over the first panel's edge and interlock them.

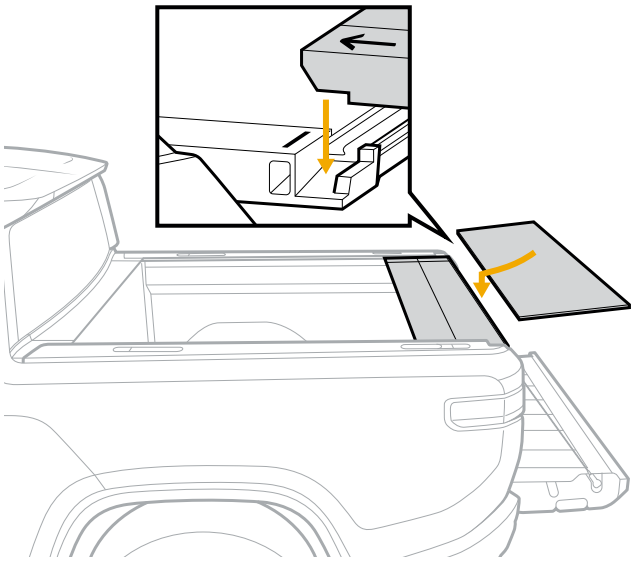

5. Slide the panels forward.
6. Repeat steps 1 to 5 with the remaining panel without a handle.

7. Align the final panel with the handle toward you and interlock it with the third panel.

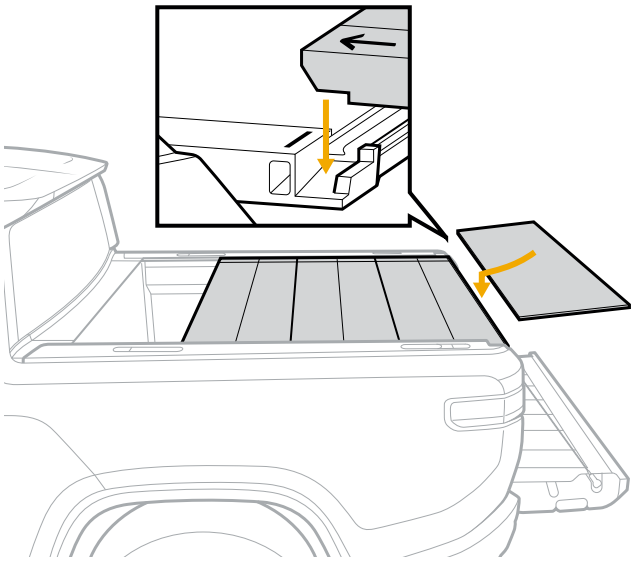

8. Slide the tonneau cover toward the front of the vehicle and press firmly until it clicks to lock it. This is needed to compress the front rubber seal for a tight fit.

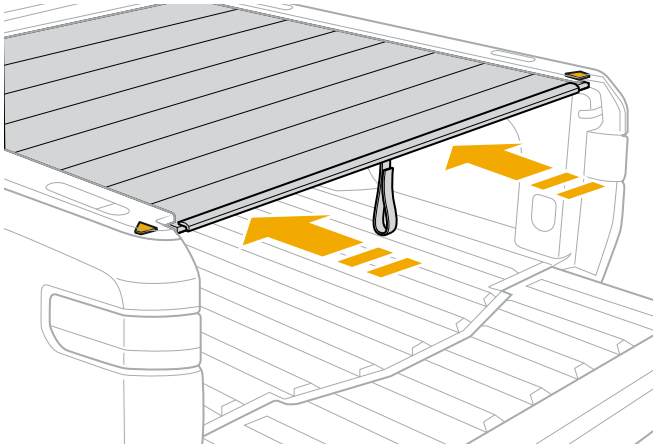

NOTE

Test to be sure the tonneau cover is locked in place before closing the tailgate. You may need to close the tailgate more firmly when all four tonneau cover panels are in place in order to compress the front and rear rubber seals.

REMOVE THE MANUAL TONNEAU COVER

1. Pull down and toward you gently on the handle on the tonneau cover to unlock it.

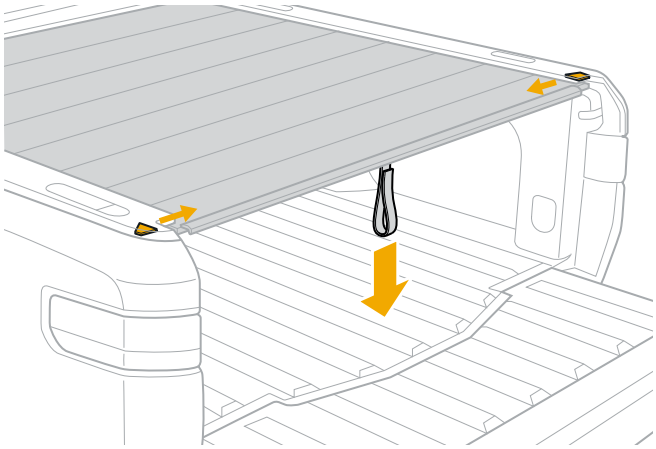

NOTE

If pulling on the handle doesn't release the latch pins, push the tonneau cover towards the front of the vehicle while pulling down on the strap to release the latch pins, then pull the strap toward you to slide the panels back toward the rear of the vehicle.

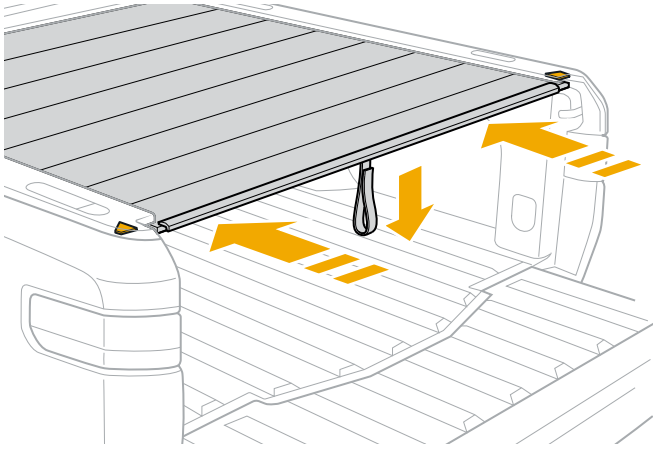

WARNING

Do not reach under the panel and pull on the latch pin cable.

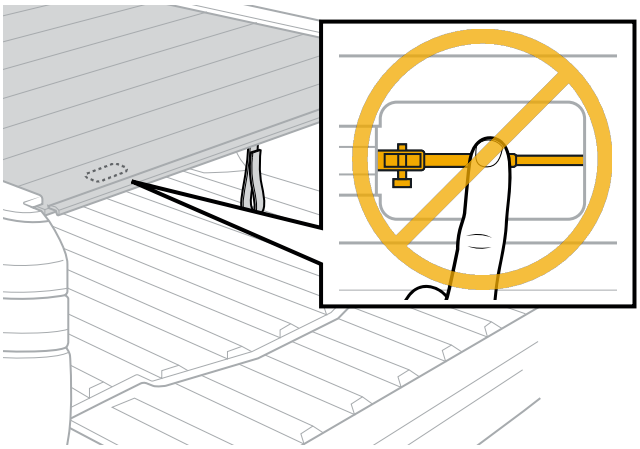

2. Slide the tonneau cover toward you until the first panel is out past the side rails.
3. Lift the panel to remove it and place it in the manual tonneau cover bag between the dividers. Flip the divider to the next section.
4. Repeat steps 2 and 3 with the remaining panels.
5. Zip the bag closed and store it in a safe place, such as the gear tunnel.

Gear Tunnel Storage

The Gear Tunnel storage offers a compartment for holding equipment or other items.

OPEN THE GEAR TUNNEL STORAGE

Park the vehicle before you access the Gear Tunnel storage.

IMPORTANT

- Objects stored in the Gear Tunnel storage may shift while you drive. Use care when you open the Gear Tunnel storage.
- Don't go into the Gear Tunnel storage; it isn't intended to hold people.
- Don't drive with your pets in the Gear Tunnel storage; it isn't intended to hold pets.

1. Use one of the following options to open the Gear Tunnel storage:
   - Buttons on the rails of the truck bed
   - Center display
   - Rivian mobile app
   - Entrapment buttons inside the Gear Tunnel storage
2. Lower the Gear Tunnel door until it opens completely.

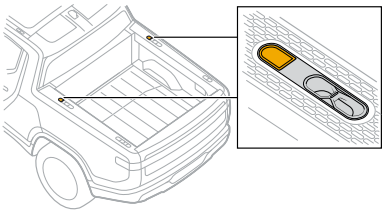

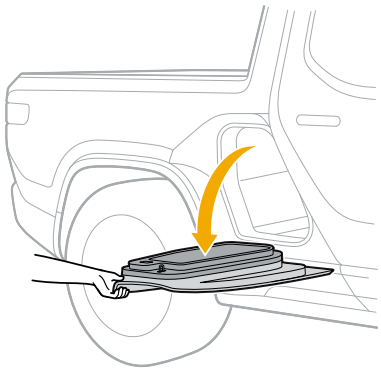

Lights turn on inside the Gear Tunnel storage when you open a Gear Tunnel door.

> **NOTE**
> You can access the Gear Tunnel storage from inside the vehicle cabin when the rear seat armrest is down. However, we recommend that you only access the Gear Tunnel storage when the vehicle is parked.

USE THE GEAR TUNNEL DOORS

Each Gear Tunnel door offers a compartment that you can use for optional storage. The driver-side Gear Tunnel door holds the tools for the air compressor.

To open the compartment in the Gear Tunnel door, slide the tab to release the compartment cover.

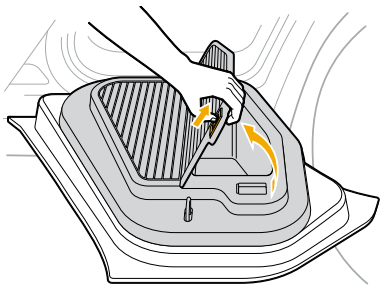

Use the Gear Tunnel doors for support when you load or unload items, or as a place to sit or stand on.

> **WARNING**
> The maximum static load capacity is 250 lbs (110 kg) for each Gear Tunnel door. Jumping on the Gear Tunnel door may damage the door.

CLOSE THE GEAR TUNNEL STORAGE

To close a Gear Tunnel door, lift it until it latches.

IMPORTANT

Close the Gear Tunnel doors so that they are flush with the vehicle before you drive. The vehicle significantly limits the maximum speed for safety reasons if you drive the vehicle with a Gear Tunnel door open.

POWER DEVICES

The Gear Tunnel storage offers the following options to power external devices:

- One 120 V power outlet
- One 12 V power outlet

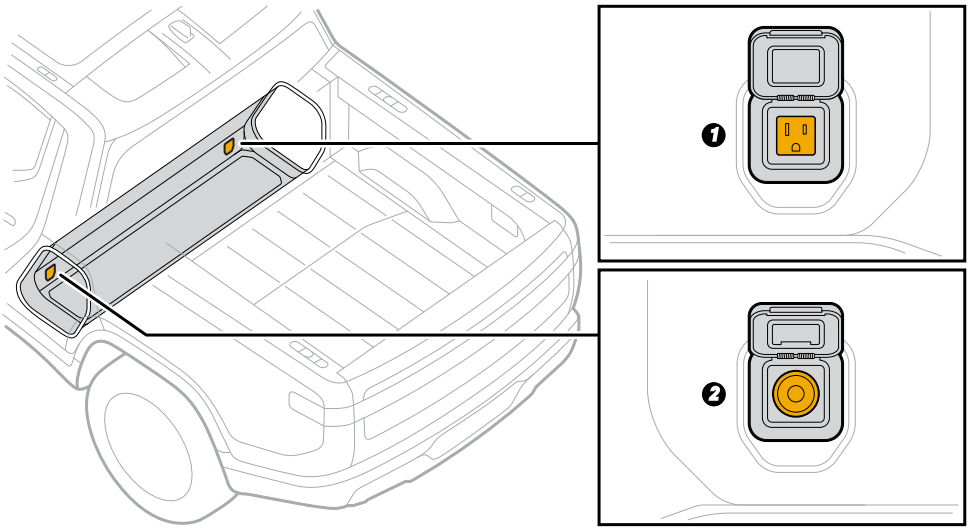

Item	Outlet	Power State
1	120 V	Power is off by default. After you turn the 120 V outlets on from the **Energy** menu on the center display, they all remain on. **NOTE** Turn off 120 V outlets when they aren't in use. If you leave the 120 V outlets turned on, they remain active and can reduce the range of your vehicle even if you lock and leave the vehicle.
2	12 V	Power is always on when the vehicle is awake.

To send power to the 120 V, 12 V, and USB-C outlets, as well as the wireless charging pad, choose **Energy** from the menu on the center display, and turn on **Outlets**.

To turn off the outlets after a period of time, set the timer by choosing the time increment. The outlets automatically turn off when the timer ends or the battery range is very low.

NOTE

The 12 V and USB-C outlets as well as the wireless charging pad are always on when the vehicle is awake. Turn on **Outlets** to keep the power on when you're away from the vehicle.

Provide Power to a 120 V Device

To use the 120 V outlet, follow these instructions:

1. Ensure that 120 V outlets are turned on in the vehicle.
2. Flip up the cover of the 120 V outlet.
3. Insert the power plug into the 120 V outlet.

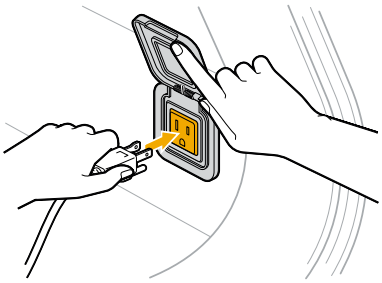

Before you close the Gear Tunnel doors, follow these instructions:

1. Unplug the device from the 120 V outlet.
2. Flip down the cover on the outlet.
3. Turn off 120 V outlets in the vehicle.

DANGER

Rivian-supplied accessories work best with your vehicle. To reduce risk of fire or a thermal event, use caution when leaving non-Rivian devices plugged in and unattended in the Gear Tunnel.

- Don't let objects obstruct any outlets being used.
- If you use a powered device not supplied by Rivian, turn off and unplug the 120 V outlet before you close the Gear Tunnel doors.
- Objects in the Gear Tunnel may shift as you drive. Use caution when opening the Gear Tunnel doors.

CAUTION

- Don't use an outlet to power any device that requires over 1,500 W (1.5 kW) of power. If the 120 V circuits overload, the power cuts off. Unplug devices before you turn the outlets back on.
- Don't use more than one high-powered device at the same time. The 120 V outlets share the 1,500 W (1.5 kW) of power.
- Leaving the 120 V outlets powered on reduces the range of your vehicle, even if no devices are plugged in.

EXIT THE GEAR TUNNEL STORAGE

While the vehicle is parked, someone who is trapped inside the Gear Tunnel storage can press either entrapment button to open both Gear Tunnel doors. The entrapment buttons glow in the dark for visibility.

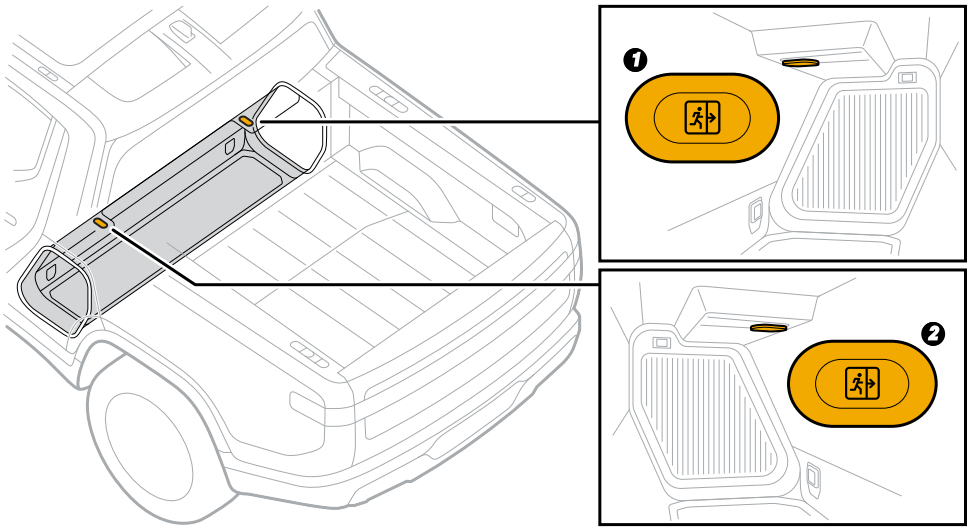

Item	Description
1	Driver-side entrapment button
2	Passenger-side entrapment button

IMPORTANT

The entrapment buttons won't release the door latches if the vehicle is in Drive, Neutral, or Reverse. If someone presses an entrapment button, a notification appears on the driver display. Prepare to park the vehicle immediately. After you park the vehicle, open the Gear Tunnel doors.

MAINTAIN THE GEAR TUNNEL STORAGE

You can remove the rubber mat from the Gear Tunnel storage to clean it.

1. Lift the rubber mat from the bottom of the Gear Tunnel storage.
2. Clean the mat with a solution of water and standard car wash liquid.

CAUTION

Don't use cleaners that have bleach or ammonium.

3. Dry the mat with a towel before you place it back inside the Gear Tunnel storage.

SECURITY

Gear Guard Security System

The Gear Guard security system monitors the vehicle and deters theft for items stored in the truck bed. It includes the following:

- Gear Guard Cable, if equipped
- Gear Guard Video with Drive Cam, Incidents, and Motion Cam
- Gear Guard Alarm

USE A GEAR GUARD CABLE

The Gear Guard Cable is a proprietary steel core cable that locks into one side of the truck bed to help secure your gear. This cable is an optional product available at rivian.com.

To secure your gear, follow these instructions:

1. Thread the cable through your gear.
2. Locate the latches below the air compressor. Insert each end of the cable into a latch until each latch closes with a click.

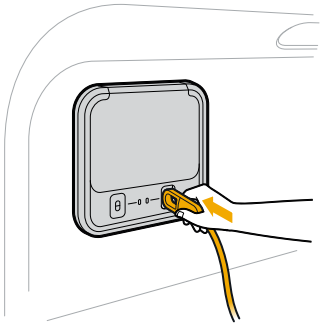

> **NOTE**
> To use the full length of the cable to secure gear, thread one end of the cable through the loop on the other end of the cable before you secure it to the latch.

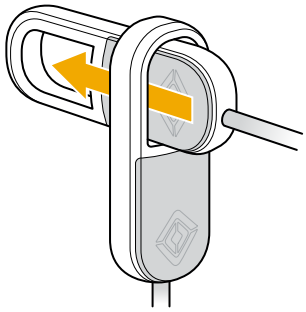

3. Lock the vehicle or all doors to lock the ends of the cable into place.

A flashing light next to a latch indicates that the latch is locked.

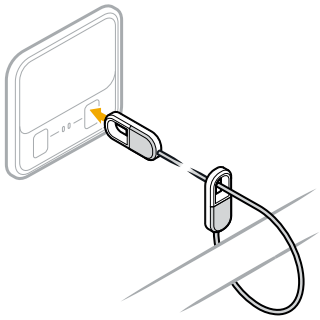

> **NOTE**
> If you can't insert an end of the cable into a latch, the latch may be in the closed position. Use a flathead screwdriver to push the latch sideways to open it.

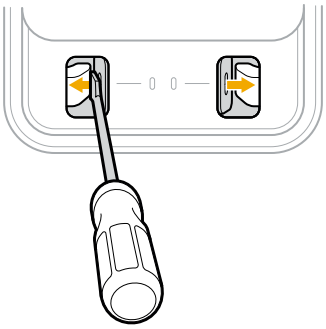

Unlock all doors to unlock the cable.

CHANGE THE GEAR GUARD SETTINGS

Choose **Gear Guard** from the menu on the center display and then choose **Gear Guard Features**.

- **Drive Cam:** Requires an external storage device for use. If Drive Cam is turned on and an external storage drive is connected, the vehicle records your entire drive and saves Drive Cam clips on demand. It also records while the vehicle is parked and occupied.

  Drive Cam clips are short videos that you initiate by choosing **Save Clip** in the status bar. The Drive Cam also records video and saves Drive Cam clips when you honk the horn for more than a second or press the SOS button.

  > **NOTE**
  >
  > If you accidentally press the **SOS** button, cancel the SOS call on the center display within 20 seconds, if possible. If there's an accidental SOS call, notify the SOS call operator to avoid first responders being dispatched.

  The vehicle records both the continuous recordings and Drive Cam clips on the external storage device. Drive Cam clips appear on the Drive Cam video tab.

  > **NOTE**
  >
  > For initial setup of the Drive Cam, shift the vehicle to **Park**. Choose **Gear Guard** from the menu on the center display. Then choose **Set Up Now** and acknowledge the terms of use on the center display. Follow the on-screen instructions.

  - **Drive Cam Chime:** Enabled by default if Drive Cam is turned on and an external storage device is connected. Turn on **Drive Cam Chime** to hear a chime when the vehicle starts or stops recording a Drive Cam clip.
  - **Storage Device:** To safely remove the external storage device from the vehicle, choose **Eject**.

- **Incidents:** Enabled by default. If enabled, the vehicle automatically records certain driving events such as collisions or hard braking. You can turn Incidents on or off. Recorded videos appear on the Incidents video tab.
- **Motion Cam:** Disabled by default. Turn on **Motion Cam** to record motion around your vehicle while you're away from it.

  You can also turn on Motion Cam to record video during an alarm event. Recorded videos appear on the Motion Cam video tab.

  - **Always on:** The Motion Cam is set to Always on by default. Choose **Always on** to record video in any location.
  - **Off at Home:** Choose **Off at Home** to record video only when the vehicle is away from home.

    > **NOTE**
    >
    > If you set the Motion Cam to **Off at Home**, ensure you set a home address in the Navigation app; otherwise, the Motion Cam uses the default, **Always on**.

- **Alarm:** Enabled by default. The Alarm protects your vehicle when it's locked. When the Alarm is triggered, the vehicle flashes the exterior lights, sounds the horn, and sends a message to the owner's Rivian mobile app.

  If the Motion Cam is turned on, the vehicle also records video. Recorded videos appear on the Motion Cam video tab.

Gear Guard Video

A camera monitors the truck bed, and additional cameras monitor the perimeter of the vehicle.

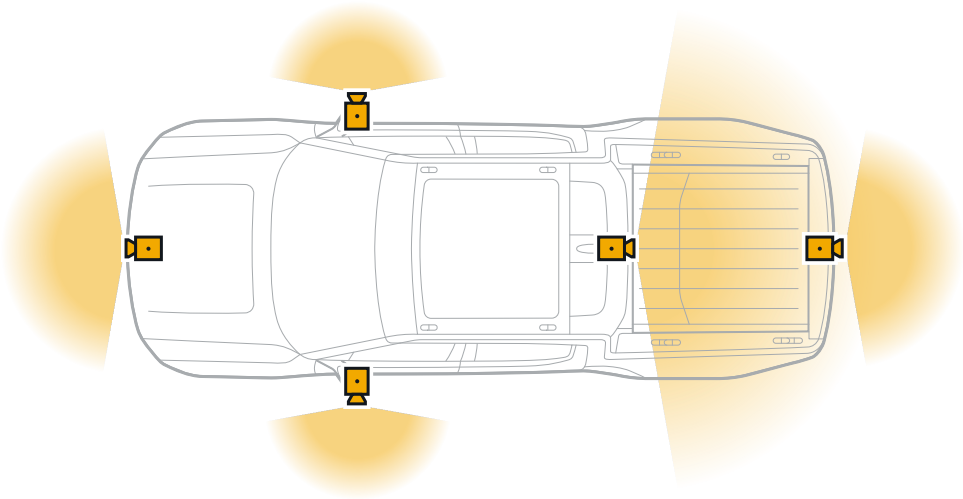

These cameras offer the following types of video recording:

- **Drive Cam:** Requires an external storage device for use. If Drive Cam is turned on and an external storage drive is connected, the vehicle records your entire drive and saves Drive Cam clips on demand. It also records while the vehicle is parked and occupied.

  Drive Cam clips are short videos that you initiate by choosing **Save Clip** in the status bar. The Drive Cam also records video and saves Drive Cam clips when you honk the horn for more than a second or press the SOS button.

  The vehicle records both the continuous recordings and Drive Cam clips on the external storage device. Drive Cam clips appear on the Drive Cam video tab.
- **Incidents:** Enabled by default. If enabled, the vehicle automatically records certain driving events such as collisions or hard braking. You can turn Incidents on or off. Recorded videos appear on the Incidents video tab.
- **Motion Cam:** Disabled by default. Turn on Motion Cam to record motion around your vehicle while you're away from it. You can also turn on Motion Cam to record video during an alarm event. Recorded videos appear on the Motion Cam video tab.
- **Alarm:** Enabled by default. The Alarm protects your vehicle when it's locked. When the Alarm is triggered, the vehicle flashes the exterior lights, sounds the horn, and sends a message to the owner's Rivian mobile app.

  If the Motion Cam is turned on, the vehicle also records video. Recorded videos appear on the Motion Cam video tab.

Gear Guard Features	Recording Triggers	Saved Location	View Access
Drive Cam: Drive Cam clips	• Choose **Save Clip** in the status bar. • Honk the horn for more than a second. • Press **SOS**.	External storage device	Drive Cam video tab (The external storage device must be connected.)
Drive Cam: Continuous recordings	The vehicle continuously records video while it moves.	External storage device	Your computer (Eject the external storage device and connect it to your computer.)
Incidents	The vehicle detects certain driving events, such as collisions or hard braking.	Onboard hard drive	Incidents video tab
Motion Cam	The vehicle detects motion while the Motion Cam is turned on and recording is available.	Onboard hard drive	Motion Cam video tab (Automatically deleted after 10 days unless you choose **Star**.)
Alarm	The Alarm is triggered while the Motion Cam is turned on.	Onboard hard drive	Motion Cam video tab (Automatically deleted after 10 days unless you choose **Star**.)

NOTE

If the Gear Guard features with video recording are turned on, they may reduce the range of the vehicle over time.

VIEW RECORDED VIDEOS

Choose **Gear Guard** from the menu on the center display, or choose **Gear Guard videos** to view recorded videos saved as the following types:

- **Drive Cam:** Triggered when you choose **Save Clip**. The Drive Cam also records video and saves Drive Cam clips when you honk the horn for more than a second or press the SOS button. The vehicle automatically saves Drive Cam clips to your external storage device.

  To view the Drive Cam clips on the Drive Cam video tab, the external storage device must be connected to one of the USB-C ports in the center console.

  > **NOTE**
  >
  > To view the continuous recordings, access your external storage device from your computer and open the **DriveCam** › **DriveStream** folder.

- **Incidents:** Triggered by a certain driving event such as a collision or hard braking. The vehicle automatically saves Incident videos to the onboard hard drive.
- **Motion Cam:** Triggered when the Motion Cam detects motion while you're away from your vehicle or triggered by the Alarm if the Motion Cam is turned on. The vehicle automatically saves Motion Cam videos to the onboard hard drive.
- **Starred:** Lists videos you selected to appear on this video tab in the Gear Guard app. The following icons differentiate the types of videos:
  - Drive Cam clip video icon
  - Incident video icon
  - Motion Cam video icon

> **IMPORTANT**
>
> The onboard hard drive automatically deletes Motion Cam videos after 10 days. To save Motion Cam videos, choose **Gear Guard** from the menu on the center display and choose **Star** for each video you want to save.

On the Motion Cam video tab, videos from the same location are organized together into an event. A blue marker indicates that an event hasn't been viewed yet.

To select multiple events, choose **Select** and then select the events.

You have the following options:

- Choose **Delete** to immediately delete the events and their associated videos.

> **NOTE**
> If you delete a Starred video that is from the Motion Cam or Alarm, you also delete it from the corresponding event on the Motion Cam video tab. If you delete a Starred video that is a Drive Cam clip, you also delete it from the external storage device.

- Choose **Cancel** to cancel your changes.
- Choose **More** for the following:
  - Choose **Select all** to select all of the events.
  - Choose **Copy to storage device** to copy the events to your external storage device.

> **NOTE**
> You can't copy Drive Cam clips because they are automatically saved to your external storage device.

When you view an event in the Gear Guard app, the first video that plays is the one whose camera first detected motion.

To watch a video:

1. Choose the video tab for **Drive Cam**, **Incidents**, **Motion Cam**, or **Starred**.
2. Select a video or an event.
3. A vehicle image shows the different camera views available via thumbnails. Select the video you want to watch.

The video automatically plays in the video player.

You can navigate between events.

Play, pause, rewind, or forward a video. You have the following options:

- Choose **Download** to copy the video to your external storage device.
- Choose **Star** to display a video on the Starred video tab or save a Motion Cam video from automatic deletion.
- Choose **Delete** to delete one video that you have selected within an event, or to delete all videos in an event.

> **NOTE**
> Deletion of a video or all videos for an event is permanent.

COPY A VIDEO TO AN EXTERNAL DEVICE

To copy a video from the onboard hard drive to your computer, use your external storage device (not included).

> **NOTE**
> This can be the same external storage device used for the Drive Cam.

The external storage device requires the following:

- 128 GB (minimum) of storage

  > **NOTE**
  > The maximum storage size is 2 TB.

- USB 3.x and USB 2.0 compatibility
- Solid State Drive (SSD) recommended
- 20 MB/s (minimum) random write speed
- FAT32 or MS-DOS (FAT) format (Apple File System and NTFS not supported)

  > **NOTE**
  > The vehicle requests to reformat your device if it doesn't detect a suitable format.

To copy a video to your external storage device, follow these instructions:

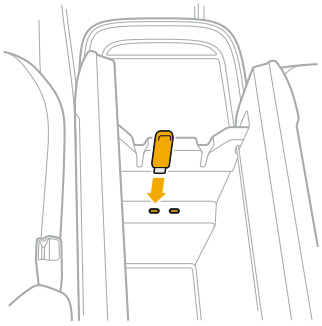

1. Connect the external storage device to one of the USB-C ports in the center console of your vehicle.

   > **NOTE**
   > Don't use a USB hub or splitter.

2. A prompt may appear on the center display. Choose **Format Device** to erase all data and format the external storage device for use by the Gear Guard app.

   > **NOTE**
   > The vehicle may take a few minutes to format the external storage device.

3. Choose **Gear Guard** from the menu on the center display.
4. Select the event and then select the video to download.
5. Choose **Download** to copy the video to your external storage device.
6. The vehicle saves the video on your external storage device.

To safely remove the external storage device from the vehicle, choose **Gear Guard** from the menu on the center display. Choose **Gear Guard Features**, and then choose **Eject**.

Drive Cam

Record video in the background and events in real time.

SET UP THE DRIVE CAM

The external storage device requires the following:

- 128 GB (minimum) of storage

> **NOTE**
> The maximum storage size is 2 TB.

- USB 3.x and USB 2.0 compatibility
- Solid State Drive (SSD) recommended
- 20 MB/s (minimum) random write speed
- FAT32 or MS-DOS (FAT) format (Apple File System and NTFS not supported)

> **NOTE**
> The vehicle requests to reformat your device if it doesn't detect a suitable format.

For initial setup to enable recording:

1. Shift the vehicle to **Park**.
2. Choose **Gear Guard** from the menu on the center display.
3. Choose **Set Up Now** and acknowledge the terms of use on the center display.
4. Connect your external storage device to one of the USB-C ports in the center console of your vehicle.

> **NOTE**
> Don't use a USB hub or splitter.

5. Follow the on-screen instructions.
6. A prompt may appear on the center display. Choose **Format Device** to erase all data and format the external storage device for use by the Gear Guard app.

> **NOTE**
> The vehicle may take a few minutes to format the external storage device.

7. Choose **Done** when the initial setup is complete.

MANAGE THE DRIVE CAM

The Drive Cam Chime setting controls whether you hear a chime when the vehicle starts or stops recording a Drive Cam clip. It is enabled by default if Drive Cam is turned on and an external storage device is connected.

To enable or disable the chime:

1. Choose **Gear Guard** from the menu on the center display.
2. Choose **Gear Guard Features**.

3. Turn **Drive Cam Chime** on or off.

To enable or disable continuous recordings and Drive Cam clips:

1. Choose **Gear Guard** from the menu on the center display.
2. Choose **Gear Guard Features**.
3. Turn **Drive Cam** on or off.

> **NOTE**
> Vehicle Shipping mode disables the Drive Cam.

SAVE DRIVE CAM CLIPS

Choose **Save Clip** in the status bar to record a 2-minute clip and watch it later on the Drive Cam video tab. The vehicle sounds a chime (if enabled) and the button turns red to indicate recording. The clip begins 15 seconds before you choose **Save Clip** and ends 1 minute and 45 seconds after you choose **Save Clip**.

You can choose **Save Clip** to stop recording before the 2-minute mark.

The Drive Cam also records video and saves Drive Cam clips when you honk the horn for more than a second or press the SOS button.

> **NOTE**
> If you accidentally press the **SOS** button, cancel the SOS call on the center display within 20 seconds, if possible. If there's an accidental SOS call, notify the SOS call operator to avoid first responders being dispatched.

ACCESS THE DRIVE CAM CLIPS

You can view Drive Cam clips as follows:

- On the Drive Cam video tab while the external storage device is connected to the vehicle
- On your computer if the external storage device is removed from the vehicle and connected to your computer

NOTES

- Recording starts 15 seconds before you initiate the Drive Cam clip.
- If the external storage device becomes full or close to full, the vehicle notifies you to remove Drive Cam clips. If there isn't enough room, the vehicle won't record new Drive Cam clips.

ACCESS THE CONTINUOUS RECORDINGS

The vehicle continuously records short segments of streaming video on your external storage device.

To view the continuous recordings:

1. Choose **Gear Guard** from the menu on the center display.
2. Choose **Gear Guard Features**.
3. Choose **Eject** and remove the external storage device from your vehicle.
4. Connect the external storage device to your computer.
5. Open the **DriveCam** › **DriveStream** folder.

NOTE

If the external storage device becomes full or close to full, the vehicle automatically deletes the oldest continuous recordings to make room for new ones.

Incidents

Incidents is enabled by default. The vehicle automatically records certain driving events such as collisions or hard braking.

To enable or disable recording:

1. Choose **Gear Guard** from the menu on the center display.
2. Choose **Gear Guard Features**.
3. Turn **Incidents** on or off.

Recording starts 15 seconds before the vehicle detects the certain driving event. The vehicle records 2-minute Incident videos on the onboard hard drive. Recorded videos appear on the Incidents video tab.

NOTES

- There is no guarantee that the cameras will record all relevant images for a certain driving event, such as a collision or hard braking.
- If the onboard hard drive becomes full or close to full, the vehicle notifies you to delete videos or remove videos from the Starred video tab. If there isn't enough room, then the vehicle won't record new Incident or Motion Cam videos.
- Vehicle Shipping mode disables Incidents.

Motion Cam

The Motion Cam records motion around your vehicle while you're away from it. Use the Motion Cam when the vehicle is in any location or away from home, under the following conditions:

- The Motion Cam is turned on.
- The vehicle is locked.
- The vehicle is sleeping.

> **NOTE**
> Vehicle Shipping mode disables the Motion Cam.

To enable or disable recording:

1. Choose **Gear Guard** from the menu on the center display.
2. Choose **Gear Guard Features**.

   > **NOTES**
   > For initial use, acknowledge the terms of use on the center display.

3. Turn **Motion Cam** on or off.
4. If you turned on Motion Cam, choose one of the following:
   - **Always on:** Choose **Always on** to allow the Motion Cam to record video in any location.
   - **Off at Home:** Choose **Off at Home** to record video only when the vehicle is away from home.

     > **NOTE**
     > If you set the Motion Cam to **Off at Home**, ensure you set a home address in the Navigation app; otherwise, the Motion Cam uses the default, **Always on**.

If recording is available, the cameras record video when a monitoring camera detects the presence of people near the exterior of the vehicle. The center display indicates that the Motion Cam is on. The Gear Guard security system makes no audible alarm.

All cameras record video for 30 seconds on the onboard hard drive. Recorded videos appear on the Motion Cam video tab.

> **NOTE**
> If the onboard hard drive becomes full or close to full, the vehicle notifies you to delete videos or remove videos from the Starred video tab. If there isn't enough room, then the vehicle won't record new Incident or Motion Cam videos.

You can turn **Motion Cam** on or off using the Rivian mobile app.

Gear Guard Alarm

The Alarm is part of the Gear Guard security system.

USE THE ALARM

The Alarm is enabled by default. If the Motion Cam is turned on, the vehicle records video. Recorded videos appear on the Motion Cam video tab.

1. Choose **Gear Guard** from the menu on the center display, and then choose **Gear Guard Features**.
2. Turn **Alarm** on or off.

When turned on, the Alarm functions under these conditions:

Condition	Actions
The Gear Guard security system detects an opened door.	The vehicle flashes the exterior lights, sounds the horn, and sends a message to the owner's Rivian mobile app. If the Motion Cam is turned on, the vehicle records video.
The Gear Guard security system detects the activation of panic mode.	The vehicle flashes the exterior lights, sounds the horn, and sends a message to the owner's Rivian mobile app. If the Motion Cam is turned on, the vehicle records video.
If equipped, the Gear Guard security system detects motion inside the cabin of the vehicle.	The vehicle flashes the exterior lights, sounds the horn, and sends a message to the owner's Rivian mobile app. If the Motion Cam is turned on, the vehicle records video.
If equipped, the Gear Guard security system detects the vehicle tilting, as if being towed.	The vehicle flashes the exterior lights, sounds the horn, and sends a message to the owner's Rivian mobile app. If the Motion Cam is turned on, the vehicle records video.

If recording is available, the cameras record 30-second videos on the onboard hard drive. Recorded videos appear on the Motion Cam video tab.

NOTE

Vehicle Shipping mode disables the Alarm.

ARM OR DISARM THE ALARM

The Alarm automatically arms itself when all of the following conditions apply:

- You enable the Alarm.
- You close and lock all of the doors.
- The vehicle can't detect anyone inside the cabin.

If you have armed the Alarm, the following conditions trigger it:

- The vehicle detects an opened door.
- If equipped:
  - The vehicle detects motion inside the cabin.
  - The vehicle tilts, as if being towed.

> **NOTE**
> To activate panic mode at any time, regardless of the Alarm status, press the **Lock** button on the key fob for 2 seconds. If the Motion Cam is turned on, the vehicle records video.

STOP THE ALARM

When the Alarm is triggered, the vehicle flashes the exterior lights, sounds the horn, and sends a message to the owner's Rivian mobile app. If the Motion Cam is turned on, the vehicle records video. No one can drive the vehicle.

To stop the Alarm, do one of the following:

- Unlock the vehicle with a key. This disarms the Alarm.
- Lock the vehicle with a key. This allows the Alarm to remain armed.
- Allow the Alarm to time out after 30 seconds. This allows the Alarm to remain armed.

> **NOTES**
> - If the Alarm is repeatedly triggered, the Alarm turns off after 5 minutes. The Alarm automatically turns back on when the vehicle turns off the immobilizer.
> - The vehicle's immobilizer helps prevent vehicle theft. When it's active, the vehicle can't be driven.

Camping and Towing

CAMPING

Camping Controls

To access the camping controls, choose **Camping** from the menu on the center display.

> **IMPORTANT**
>
> Camping controls, except for Outlets and Camp Courtesy, are only available when the vehicle is in Park.
>
> If turned on, Camp Courtesy automatically turns off when the vehicle reaches the speed of 15.5 mph (25 km/h).

ENERGY USE

Choose the appropriate level of energy use:

- **Stay off:** Choose **Stay off** to reduce energy use. General vehicle power, outlets, climate, displays, cabin lights, audio, and Gear Guard turn off; however, reading lights remain available. To turn the vehicle back on, unlock it and press the brake pedal.

  > **NOTE**
  >
  > Pet Comfort isn't available.

- **Normal:** Choose **Normal** to have your vehicle use energy as usual. The vehicle returns to **Normal** when you drive or the vehicle exits **Stay off** or **Stay on**.
- **Stay on:** Choose **Stay on** to maintain a comfortable cabin with climate control so you can sleep in the cabin. The vehicle doesn't sleep. General vehicle power, outlets, climate, displays, cabin lights, and audio remain available.

OUTLETS

To send power to the 120 V, 12 V, and USB-C outlets, as well as the wireless charging pad:

1. Choose **Outlets**.
2. Set the timer.
3. Choose **Turn On Outlets**.

The outlets automatically turn off when the timer ends or the battery range is very low.

> **NOTE**
>
> The 12 V and USB-C outlets as well as the wireless charging pad are always on when the vehicle is awake. Turn on **Outlets** to keep the power on when you're away from your vehicle.

120 V Outlets

DANGER

Rivian-supplied accessories work best with your vehicle. To reduce risk of fire or a thermal event, use caution when leaving non-Rivian devices plugged in and unattended in the Gear Tunnel.

- Don't let objects obstruct any outlets being used.
- If you use a powered device not supplied by Rivian, turn off and unplug the 120 V outlet before you close the Gear Tunnel doors.
- Objects in the Gear Tunnel may shift as you drive. Use caution when opening the Gear Tunnel doors.

CAUTION

- Don't use an outlet to power any device that requires over 1,500 W (1.5 kW) of power. If the 120 V circuits overload, the power cuts off. Unplug devices before you turn the outlets back on.
- Don’t use more than one high-powered device at the same time. The 120 V outlets share the 1,500 W (1.5 kW) of power.
- Leaving the 120 V outlets powered on reduces the range of your vehicle, even if no devices are plugged in.

CAMP COURTESY

To move around the vehicle without disturbing others, turn on **Camp courtesy** to turn off the following:

- Exterior lights, such as the lights that automatically turn on when you lock or unlock the vehicle or open the doors
- Vehicle sounds, such as lock sounds and exterior chimes
- Proximity locking or unlocking
- Gear Guard Alarm sound

When Camp Courtesy is turned on, use the lights stalk to turn headlights on or off. The vehicle sets the lights to Auto mode if you turn off Camp Courtesy or when the vehicle reaches the speed of 15.5 mph (25 km/h).

NOTE

When Camp Courtesy is active, the vehicle may limit heating or air conditioning to reduce noise; however, you can manually adjust the climate controls to accelerate heating or cooling.

TURN DISPLAYS OFF

Choose **Turn displays off** to turn off the center, driver, and rear displays.

To turn on the displays, tap the center display. If they don’t turn on, press the brake pedal. If neither action turns on the displays, the vehicle is asleep. Unlock the vehicle and press the brake pedal to wake it up and turn on the displays.

FLOOD LIGHTS

Flood lights allow you to easily view the area in front of your vehicle when it's dark outside. They are located behind the side mirrors and are available when the vehicle is in Park.

Choose a **Flood Light** button, or , to turn a flood light on or off.

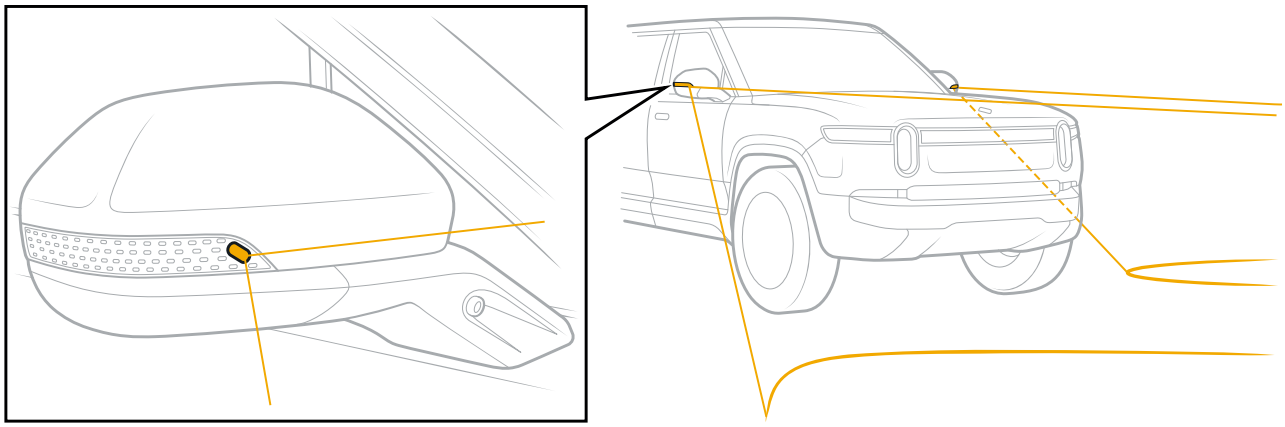

VEHICLE LEVELING

You can level your vehicle when parked on uneven terrain.

Level the Vehicle

1. Find an appropriate parking spot.
2. Park your vehicle.
3. Clear the area surrounding your vehicle.

> **IMPORTANT**
> Ensure you have clearance above and below your vehicle to raise or lower its ride height.

4. Close all doors and openings, including the Gear Tunnel doors.
5. Choose **Level** on the center display. The vehicle checks whether it can safely level itself on the surrounding terrain.
   - If the terrain is suitable, the vehicle levels itself. This may take several minutes.

     > **NOTES**
     > - Remain seated until the vehicle finishes leveling itself.
     > - The vehicle may make sounds while the air suspension adjusts to level the vehicle.

   - If the terrain isn't suitable, the vehicle notifies you to find suitable terrain. After you move and park your vehicle, you can choose **Level** again.

NOTES

- If you briefly open a door, the vehicle pauses its leveling. After you close the door, the vehicle resumes its leveling.
- If you open a door and it remains open for a long time, the vehicle stops leveling. To level the vehicle, choose **Reset ride height** and then choose **Level**.
- If the leveled vehicle is parked for a long time, the vehicle may droop over time. To level the vehicle, choose **Reset ride height** and then choose **Level**.

Reset Ride Height

To return the vehicle to its previous ride height, choose **Reset ride height** or drive the vehicle.

NOTES

- The vehicle may make sounds while the air suspension adjusts to reset to the previous ride height.
- If you drive the vehicle after it is leveled, its handling, driving performance, and speed are limited until the vehicle automatically returns to its previous ride height.

Rivian Camp Speaker

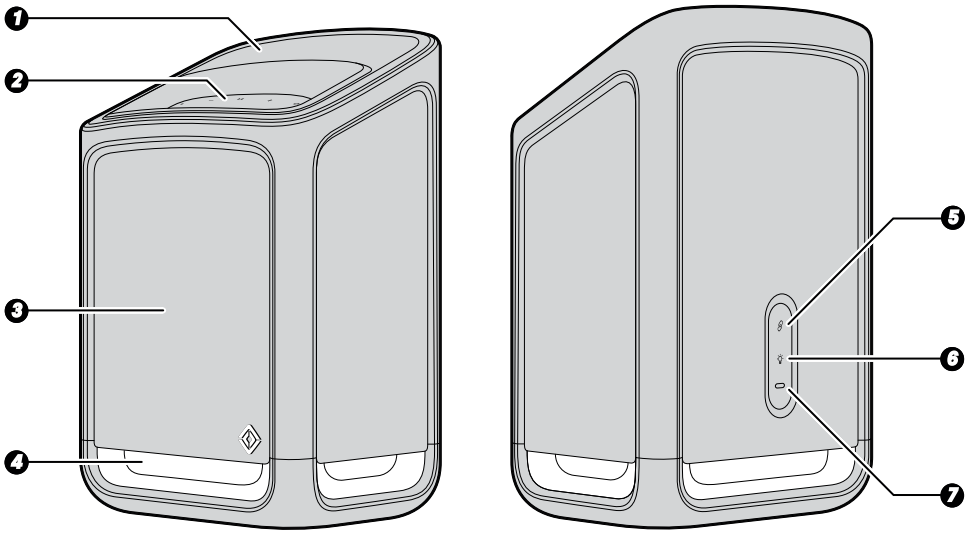

Item	Description
1	Handle
2	Audio controls
3	Fabric speaker covers
4	Lantern
5	Connect button
6	Lantern button
7	USB-C port

SPEAKER SPECIFICATIONS

Item	Value
Model	RCS 1.0
Dimensions (height x length x width)	9.9 in x 6.7 in x 5.1 in (252 mm x 170 mm x 128.5 mm)
Weight	5.7 lb (2.6 kg)
Battery capacity (minimum)	32 Watt hours
Charge time (maximum)	3 hours
Play time (minimum, audio only)	6.5 hours
Lantern (60% brightness)	3.5 hours
Input power	30 Watts
Input rating	Type C: DC 5 V / 9 V / 15 V / 20 V Pogo pin: DC 12 V
Output rating	Type C: DC 5 V / 2 A
Ambient temperature (operating)	32 to 104°F (0 to 40°C)
Safe storage temperature (non-operating)	Up to 185°F (85°C)

GETTING STARTED

The Rivian Camp Speaker docks in the center console.

IMPORTANT

The speaker needs to be fully charged before initial use. Undock the speaker and plug it into a power source using a USB-C cable. Check the charge level for a green light by pressing the **Lantern** button twice.

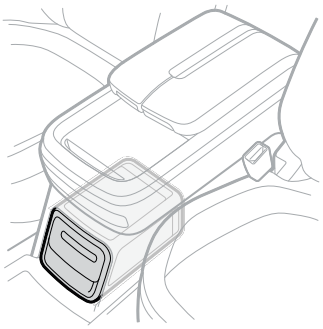

BATTERY

Checking Charge Level

On the speaker, press the **Lantern** button two times.

- Green: 75% to 100%
- Amber: 35% to 74%
- Red: 0% to 34%

Charging the Speaker

When docked, the speaker automatically charges as the vehicle drives. When undocked, the speaker can be charged when plugged into a USB-C source. The LED light above the USB-C connector at the rear of the speaker pulses to indicate when it charges. The LED light shows as solid white when the speaker is fully charged.

A warning audio tone plays when the battery power falls to 5% remaining. The speaker powers down on its own if it is not charged.

> **NOTE**
>
> Normal operation will not work if the battery temperature falls outside allowed temperatures 32 to 104°F (0 to 40°C).

Charging with a USB-C Cable

When the speaker is not docked, you can charge the speaker by connecting to a power source using the USB-C cable.

Undocking the Speaker

The speaker unlocks once the vehicle is in Park, or when the vehicle unlocks. Pull the speaker straight out by the handle to remove it from its dock. You can also unlock or lock the speaker from its dock on the Speaker Settings screen of the center display.

> **NOTE**
>
> To avoid damage to the latch, gently pull on a speaker after unlocking it from the dock. Don't pull the speaker too hard.

> **CAUTION**
>
> Don't store items in the speaker's dock. This may damage the charging contacts within the dock.

Docking the Speaker

The speaker powers down when it docks and begins to charge as the vehicle drives. Ensure that the speaker is properly latched in the dock.

> **NOTE**
>
> The speaker locks in place when the vehicle is in motion.

Turning On the Speaker

- If the speaker is on standby, press any button to wake it.
- If the speaker is off, hold down the **Action** button for 3 seconds to wake it.

Connecting with Bluetooth

When the speaker isn't docked inside the vehicle, press the **Connect** button for 2 seconds on the speaker to enter pairing mode, or manually connect to it from the *Bluetooth*® menu on your smartphone. The Connect light blinks blue when pairing and becomes solid blue when connected. The speaker stays connected to that device until docked inside the vehicle or connected to another device.

If no Bluetooth device is connected, the speaker searches for devices to pair with for 30 seconds.

After the speaker establishes a Bluetooth connection, it remembers up to eight Bluetooth devices. When you turn it on again, the speaker automatically searches for a known device that's available nearby.

> **NOTE**
> The speaker supports Bluetooth devices version 4.2 and up.

POWER MODES

Mode	State	Behavior
Off	Not connected	Buttons are dark
Standby	Connected to Bluetooth battery-saving mode	Buttons are softly lit
On	In use	Lantern is on Music is playing

BUTTONS

The control buttons at the top of the speaker appear once the speaker powers on.

Actions

Icon	Color	Name	Result
	• White (Off) • Blue (Bluetooth On)	Connect (Bluetooth)	• When the speaker turns on, hold down for 2 seconds to start or stop Bluetooth pairing. The icon blinks slowly while in pairing mode and stops blinking when pairing is complete. • Hold down for 30 seconds to perform a hardware reset.
	White	Lantern	• If the speaker is in Standby mode, press to cycle the lantern through Low, Medium, High, and Off states. • When the lantern lights up, hold down for two seconds to turn off the lantern.
	White	Action	• To reset the speaker, hold down for 3 seconds to turn it completely off. Then hold down for 3 seconds to power it back on.
	White	Volume -	• Press to decrease audio volume in single steps. • Hold down to accelerate decreasing the audio volume.
	White	Play/Pause	• Press to toggle between playing and pausing audio. • Press 2 times to skip to the next track. • Press 3 times to go back to the previous track. • Hold down for 7 seconds to put the speaker in Standby mode.
	White	Volume +	• Press to increase audio volume in single steps. • Hold down to accelerate increasing the audio volume.
	White (Off) Red (Muted)	Mic Mute	• Press to toggle between muting and un-muting the microphone.

Icon	Color	Name	Result
		Play Next*	• Press to skip to the next song or to the next radio station. • Hold down to fast-forward through the current song or skip to the next radio station.
		Play Previous*	• Press to go back to the start of the current song or to the previous radio station. • Press continuously to skip to prior songs or to prior radio stations. • Hold down to rewind through the current song or skip to the previous radio station.

*Handled on the device playing content, not on the speaker.

WARNING

Playing the sound system at high volumes can cause hearing damage.

LOW BASS MODE

Low Bass Mode turns off lower-frequency bass for a quieter listening environment, such as for areas with designated quiet hours.

Press the **Volume** ⊕ and **Volume** ⊖ buttons simultaneously for 7 seconds to toggle Low Bass Mode on and off.

LANTERN

The lantern is controlled by a button at the top of the bezel. Cycle through the lantern brightness with a series of short presses: 30%, 60%, 100%, 0% (off).

At any time, hold down the **Lantern** button to max out the brightness to 100%.

CAUTION

The Camp Speaker's lantern is not replaceable. When the lantern reaches its end of life, Contact Rivian to replace your Camp Speaker.

RESETTING THE SPEAKER

Hardware Reset

Perform a hardware reset when the speaker hangs and doesn't respond to button presses.

Hold down the **Connect** button for 30 seconds to perform a hardware reset.

Factory Reset

Perform a factory reset to completely reset the speaker to its initial state.
Hold down the **Action**, **Volume Down** , and **Play/Pause** buttons simultaneously for 7 seconds to perform a factory reset.

CAUTION

A factory reset erases data about device IDs, pairings, and preferences from the speaker's memory.

UPDATES

The speaker uses the vehicle's connectivity to receive updates when docked.

CLEANING THE SPEAKER

To maintain the look and functionality of the speaker, occasionally inspect it for wear and tear through regular use. Wipe the speaker with a soft dry cloth for surface stains.

WARNING

Don't submerge the speaker in liquid. Don't use chemical cleaning agents to clean the speaker.

TROUBLESHOOTING

If the speaker doesn't work as intended, refer to the following troubleshooting guide before you contact Rivian.

If This Happens	Try This

Speaker doesn't turn on	• Remove the speaker from its dock. This triggers the speaker to turn on.
	• Make sure the battery has enough charge.
	• Charge the battery with a USB-C adapter for 3 hours.
	  • The USB-C light pulses white to indicate charging in progress.
	  • The USB-C light turns solid white to indicate a fully-charged battery.
	• Hold down the **Connect** button for 30 seconds to perform a hardware reset.

No sound	• Press **Volume Up** • Make sure Bluetooth connection has successfully paired. • Make sure audio runs on the streaming source (phone or tablet). • Hold down the **Action**, **Volume Down** , and **Play/Pause** buttons simultaneously for 7 seconds to perform a factory reset.
Weak signal	• Check if the device is within range for Bluetooth: <98 ft (<30 m). • Move the speaker closer to the device or network that it is connected to. • If the speaker can't pair with the device once it's within range, choose the option to "forget the device," and then try again to pair the speaker to the device. • Hold down the **Action**, **Volume Down** , and **Play/Pause** buttons simultaneously for 7 seconds to perform a factory reset.
"Speaker not fully docked" message appears	• Firmly push in the speaker to ensure that it is properly latched in the dock. • If this message occurs frequently, remove the speaker from the dock and Contact Rivian to have the hardware inspected.
Lantern doesn't work	Contact Rivian for lantern repair.

IMPORTANT SAFETY INFORMATION

DANGER

The rechargeable battery may explode if it is incorrectly replaced. Contact Rivian for battery replacement. The speaker forces a shutdown to protect the battery if the temperature falls outside the range of -4 to +140°F (-20 to +60°C).

- Read and keep these instructions.
- Heed all warnings and follow all instructions.
- Clean only with a soft dry cloth. Household cleaners or solvents can damage the finish.
- Openings are for ventilation. To prevent damage caused by overheating, don't block openings.
- Don't install near heat sources such as radiators, heat registers, stoves, or other devices that produce heat.
- Avoid leaving the speaker in direct sunlight or near excessive heat. Don't leave the speaker on seats, on top of the center console, on the floor of the vehicle, or close to a campfire.

CAUTION

Temperatures that exceed 185°F (85°C) can damage the speaker.

- To reduce the risk of fire or electric shock, don’t expose the speaker to a heavy rainstorm.
- The lantern light quickly flashes red before it shuts down to indicate that the speaker has become too hot or too cold.
- Only use attachments or accessories specified by the manufacturer, such as a USB-C cable.
- Cables plugged into the speaker shouldn't be pinched or knotted. Ensure that people can't walk or trip on the cables.
- Unplug attachments and accessories from the speaker during lightning storms and when you store the speaker for a long period of time.
- Refer all service requests to qualified service personnel with Rivian. Service is required if the speaker doesn't function normally or it is damaged in any way, such as through exposure to spilled liquids, excessive rain, or moisture.

REGULATORY INFORMATION

	This symbol means the product must not be discarded as household waste, and should be delivered to an appropriate collection facility for recycling. Proper disposal and recycling helps protect natural resources, human health, and the environment. For more information on disposal and recycling of this product, contact your local municipality, disposal service, or Rivian.
CE	Bluetooth®
BC	Wi Fi CERTIFIED
TÜV Rheinland C US	www.tuv.com TÜV Rheinland ID 0000013345 Verified Energy Performance Performance Énergétique Vérifiée
UK CA	Made for iPhone | iPad | iPod

Air Compressor

The optional air compressor hose and accessories are stored in the Gear Tunnel door. These accessories allow you to inflate bicycle tires and other adventure equipment up to 145 psi. The air compressor also features a quick-disconnect air chuck with a hose that extends to all four wheels.

AIR COMPRESSOR ACCESSORIES

The Air Compressor Accessories are located in driver-side Gear Tunnel storage compartment.

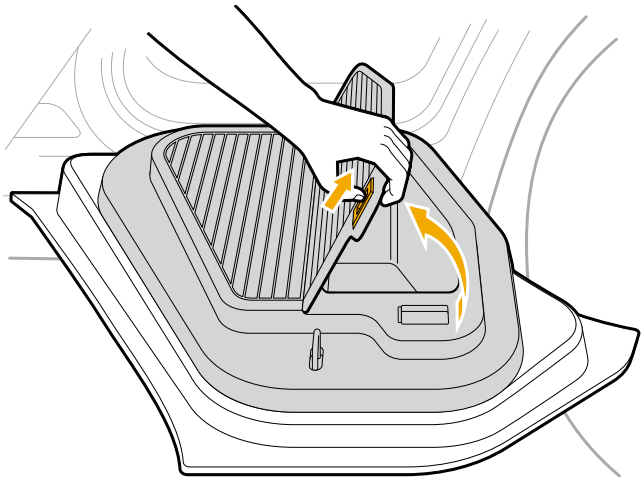

USE THE AIR COMPRESSOR ACCESSORY KIT

Use these accessories to fill or deflate items such as kayaks, balls, and tires for bicycles and motorcycles. Refer to information about sealing a flat tire for instructions that use these tools.

The kit consists of the following items:

- 20 ft hose with Velcro strap
- Tire sealant kit
- Quick Start Guide
- Air chuck with quick-disconnect fitting
- Inflation needles, fill valves, valve stem cap, deflate tube, fill adapter, and adapters
- Schrader valve, core and tool to pull core out

1. Connect one female end of the air hose quick connector to the air compressor by pulling the sleeve of the quick connector back.

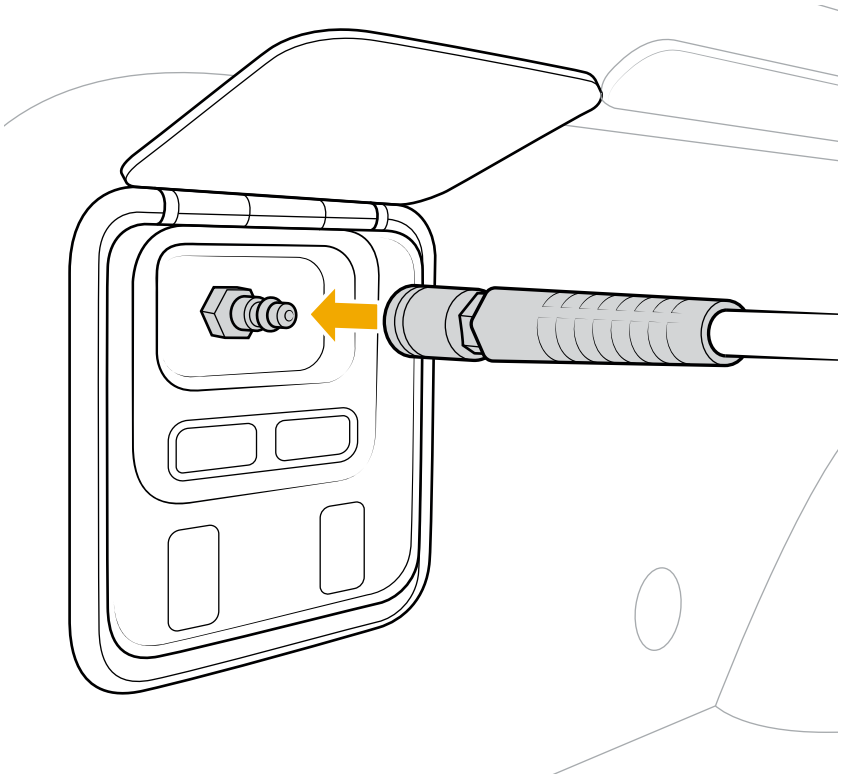

2. Connect the appropriate air-fitting to the other end of the hose.

> **NOTE**
> The air connectors are not universal. Ensure you use the air-fittings from the Rivian accessory kit that have the same fitting profile. Otherwise, you may need an adapter hose.

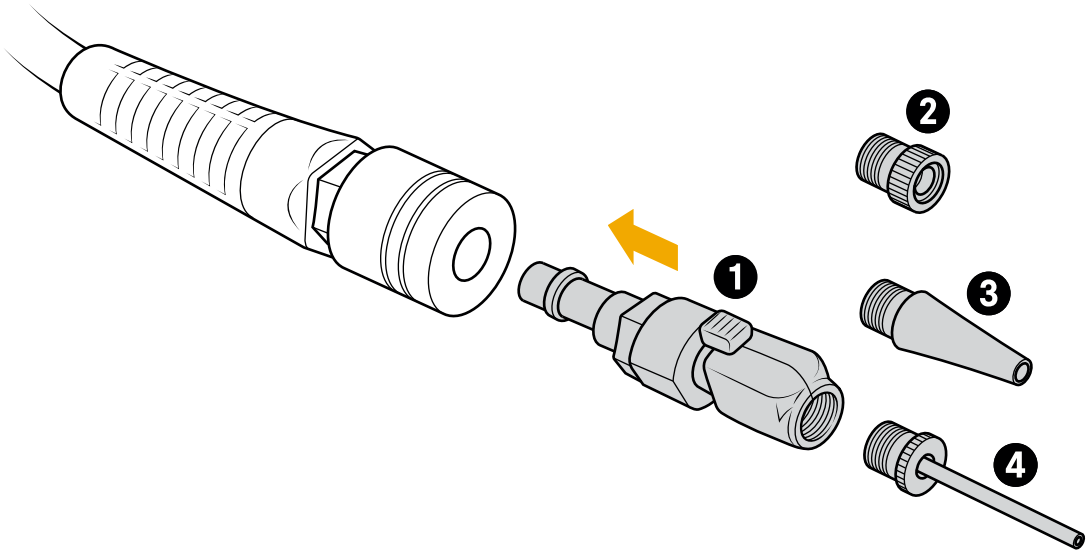

Item	Description
1	Schrader fill valve
2	Presta valve adapter
3	Plastic nozzle
4	Needle nozzle

NOTES

- Use the Schrader fill valve to air down or fill your tires.
- Use the Presta valve for bikes with narrower rims, such as road bikes or hybrid bikes.
- Use the plastic nozzle to fill kayaks.
- Use the needle nozzle to fill sports equipment such as balls.

USE THE AIR COMPRESSOR

You can use the air compressor when the vehicle is in Park and unlocked. The air compressor is ready when the display shows a pressure reading.

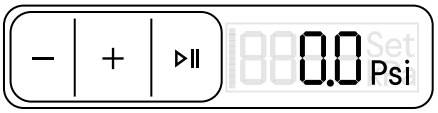

Button	Function
—	Decrease the set pressure
+	Increase the set pressure
▷II	Start or pause the compressor

INFLATE TIRES AND ADVENTURE EQUIPMENT

Inflate tires or objects that require a target pressure:

1. Check the recommended cold inflation pressure for the tire or adventure equipment before connecting the air compressor. Tire information can be found on the Tire and Loading Information label on the driver's door pillar.
2. Push the chuck firmly into one end of the pressure hose.

3. Connect additional adapters if needed.
4. Push the opposite end of the pressure hose onto the compressor's quick-disconnect fitting. The hose snaps onto the valve.
5. Connect the air chuck to the tire or equipment you are inflating. The air chuck locks on the valve stem. The display shows the detected pressure.
6. Press the **Plus** button to set the recommended tire cold inflation pressure or target pressure of other equipment. "Set" appears on the display. Hold the **Plus** button or **Minus** button to quickly advance to your selected pressure.

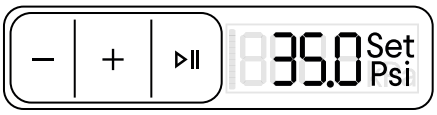

7. Press the **Start** button to start the compressor. The compressor stops when it reaches the target pressure.

> **NOTE**
>
> The air compressor stops periodically to check the pressure level. It can happen a few times before it reaches the target pressure. It may stay off for up to 8 seconds before resuming. The word Set disappears when target pressure is reached. Ensure you see Set again to fill another object. If target is not set, the air will flow freely and continuously.

8. Squeeze the lever on the air chuck to remove it from the tire or equipment.

> **NOTES**
>
> - If you don't press the **Start** button, the pressure setting times out after five minutes. If the system times out, set the target pressure again, and then press **Start**.
> - Press the **Pause** button to pause the compressor. You can increase or decrease the target pressure when the compressor is paused.
> - When the air compressor pauses, it is checking actual pressure versus set pressure. After "Set" stops blinking on the display, the task is completed. Disconnect the hose and move it to the next tire if applicable.

> **CAUTION**
>
> - The compressor is equipped with a thermal reset switch that powers off the compressor if it gets too hot. After the compressor cools, the switch resets.

Inflate small objects that don't have a specific target pressure:

1. Connect the Schrader Valve or adapter to the object.
2. Press the **Start** button to start the compressor. Ensure "On" appears on the display.
3. Monitor the object until desired pressure or firmness is reached.
4. Press the **Pause** button to pause the compressor.
5. Replace the cover of the object, if applicable once the object is filled to prevent air loss.

NOTE

Press the **Start** button again and repeat steps 3 and 4 if the object or equipment in not filled to your liking.

Field Kit

NOTE

This is an optional Adventure Gear product. Learn more at rivian.com.

If you purchase the optional field kit, you can store it in the front passenger-side door. Use it for emergencies that include medical and survival situations. The field kit includes items that can be used to treat minor to major injuries. Read the full list of contents inside the kit.

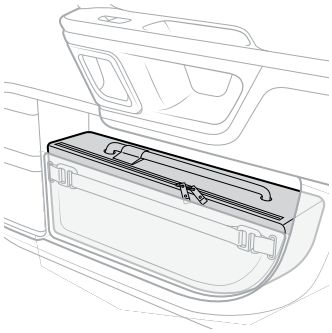

NOTE

Replace any used or out-of-date contents.

First-Aid Kit

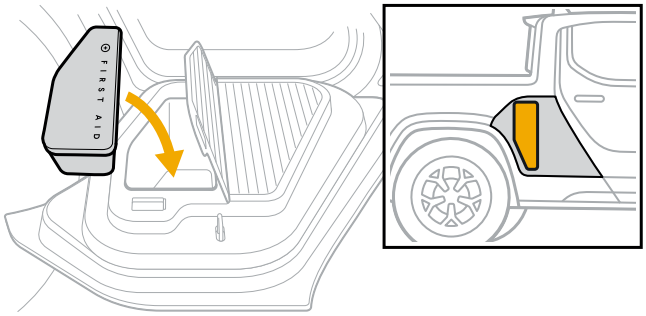

The first-aid kit is located in the passenger-side Gear Tunnel door. The first-aid kit includes basic first-aid items for minor to major injuries. Refer to the first-aid instruction booklet inside the kit.

NOTE

Replace any used or out-of-date contents.

Power Outlets

The following power outlets are available in the vehicle:

- 12 V
- 120 V
- USB-C
- Wireless Charger

NOTES

- Use the USB-C outlets at the back of the head restraints and below the rear display screen for charging only. The USB-C ports can charge a max of 15 W and are best suited for smaller electronic devices such as a phone or tablet.
- Use the USB-C outlets within the storage bin of the center console to charge and store data, such as security footage from the Gear Guard.
- Depending on your vehicle, not all outlets may be available.

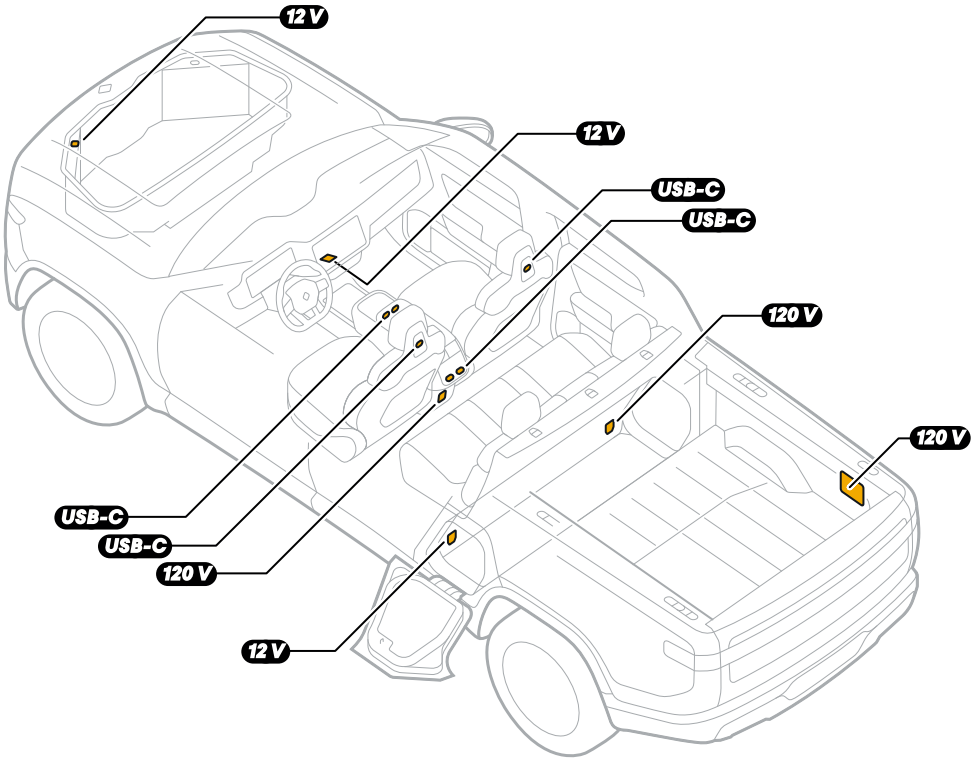

DANGER

Rivian-supplied accessories work best with your vehicle. To reduce risk of fire or a thermal event, use caution when leaving non-Rivian devices plugged in and unattended in the Gear Tunnel.

- Don't let objects obstruct any outlets being used.
- If you use a powered device not supplied by Rivian, turn off and unplug the 120 V outlet before you close the Gear Tunnel doors.
- Objects in the Gear Tunnel may shift as you drive. Use caution when opening the Gear Tunnel doors.

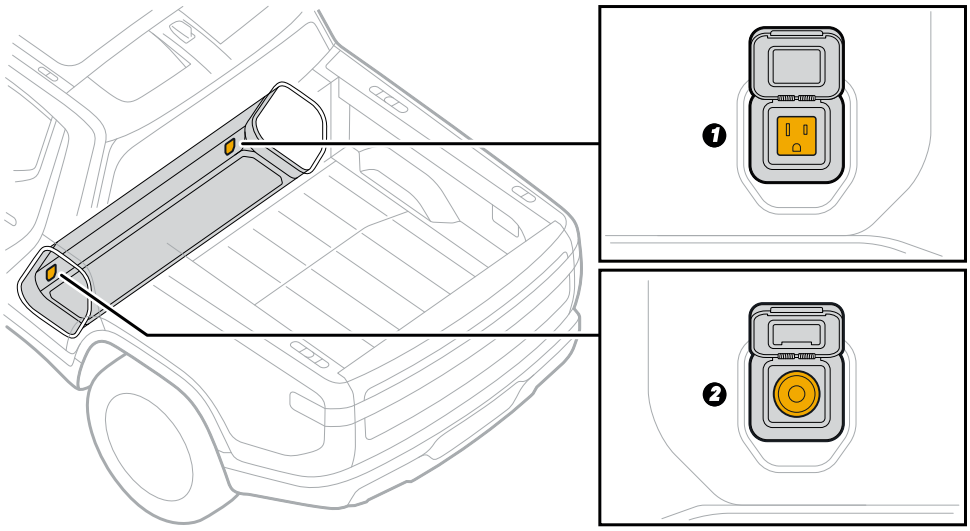

Item	Outlet	Power State
1	120 V	Power is off by default. After you turn them on from the **Energy** menu on the center display, they all remain on.
2	12 V	Power is always on when the vehicle is awake.

CAUTION

- Don't use an outlet to power any device that requires over 1,500 W (1.5 kW) of power. If the 120 V circuits overload, the power cuts off. Unplug devices before you turn the outlets back on.
- Don’t use more than one high-powered device at the same time. The 120 V outlets share the 1,500 W (1.5 kW) of power.
- Leaving the 120 V outlets powered on reduces the range of your vehicle, even if no devices are plugged in.

ACCESSORY POWER

Accessory power allows you to keep your vehicle powered on even when you walk away from your vehicle, lock the car, or restart the vehicle. A visual indicator appears in the center of the status bar to alert you if the power is on.

NOTE

Using accessory power reduces your range.

To send power to the 120 V, 12 V, and USB-C outlets, as well as the wireless charging pad:

1. Choose **Energy** from the app tray at the bottom of the center display, and then choose **Outlets**.
2. Set the timer.
3. Choose **Turn On Outlets**.

The outlets automatically turn off when the timer ends or the battery range is very low.

NOTE

The 12 V and USB-C outlets as well as the wireless charging pad are always on when the vehicle is awake. Turn on **Outlets** to keep the power on when you're away from your vehicle.

TOWING A TRAILER

Load Capacity

The R1T can tow up to 11,000 lbs (4,989 kg) using a weight distributing hitch, and up to 5,000 lbs (2,267 kg) using a standard hitch.

Towing affects the vehicle's range. Aerodynamics has the most significant effect on range when you tow a trailer on the highway. High-speed driving, large or boxy trailers, and windy conditions significantly reduce range. Trailer and cargo weight affects vehicle range during frequent acceleration or uphill driving.

See the Tire and Loading Information label on the driver-side door frame. The label describes the load capacity for the vehicle with or without a trailer. Trailer loads are transferred to the vehicle, so you must include the trailer and cargo weight when you calculate the vehicle's cargo capacity.

To determine the vehicle's correct load limit, see Tires and Wheels.

Trailer Hitch

The R1T features an integrated 2 in (5 cm) Class V receiver located behind the trailer hitch cover under the rear bumper.

To remove the trailer hitch cover:

1. Use a flathead screwdriver to loosen the screws in the trailer hitch cover a quarter turn counterclockwise.

CAUTION

To avoid breakage, don't fully release the screws. The screws stay attached to the trailer hitch cover.

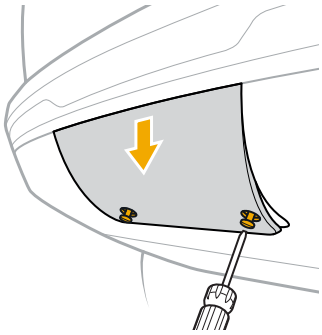

2. Grip the cover and pull it down vertically to remove it.

To reinstall the trailer hitch cover:

1. Align the trailer hitch cover tabs with the trailer hitch slot. Ensure that the cover is vertical.

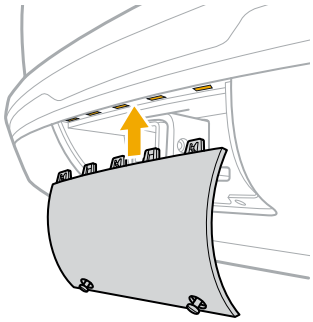

2. Raise the trailer hitch cover vertically to insert the tabs into the vehicle. Push the cover into the trailer hitch slot until it's flush with the bumper.
3. Use a flathead screwdriver to turn both screws a quarter turn clockwise. Stop tightening when the grooves are parallel to the line on the bumper.

CAUTION

Don't overtighten the screws.

REAR ACCESSORY MODE

When you have accessories installed on the trailer hitch, you can hide rear visual alerts and mute audio warnings while in reverse. To enable this feature, choose **Settings** › **Vehicle** › **Driver+** and then turn on **Rear accessory**.

NOTES

- If your accessory is plugged in to the vehicle's electrical trailer connector, Park Assist, Lane Keeping Assist, and Automatic Emergency Braking are disabled.
- Adaptive Cruise Control is unavailable, but you can use Manual Cruise Control.

Towing Mode

Towing mode helps you pull a trailer safely. Towing mode keeps the vehicle in all-wheel drive and provides maximum available torque. Built-in trailer brake gain controls add more stopping power. The Trailer Sway Control is always on when in Towing mode.

To turn on Towing mode, plug the trailer's electrical plug into the connector on the vehicle. The system detects an attached trailer through the electrical connector for the trailer brake and taillights. When connected, choose **Accept** on the center display to turn on Towing mode.

The vehicle supports electric trailer brakes. Support for additional braking systems will be available in a future update.

Towing mode disables the following features:

- Rear ultrasonic sensors
- Automatic ride height adjustment
- Adaptive Cruise Control
- Driver+ features, such as Highway Assist, Lane Keeping Assist, Automatic Emergency Braking, Blind Spot Monitoring, and Rear Cross-Traffic Warning

DANGER

Don't exit Towing mode while you drive. You could lose control of the vehicle and cause a crash.

CAUTION

- The vehicle doesn't support dinghy towing or flat towing for cars.
- Don't use your vehicle to tow charge another electric vehicle. This will damage both vehicles.

Trailer Brakes

VEHICLE HOLD

Vehicle Hold is limited while in Towing mode. Be ready to use the brake pedal to keep the vehicle from rolling.

REGENERATIVE BRAKING

The regenerative braking setting remains the same while in Towing mode. You can choose the regenerative braking settings from Drive Modes in the center display.

TRAILER BRAKE GAIN

When you connect a trailer that has trailer brakes, you can set the Trailer Brake Gain from the Towing mode controls on the center display. Choose the desired trailer brake gain for your trailer and driving conditions. Test the trailer brakes and adjust the gain if necessary. You can also use the manual trailer brake to check the trailer brake function.

NOTE

Trailer brake gain is only available on trailers with trailer brakes. If you connect a trailer equipped with lights only, the trailer brake gain control is off.

MANUAL TRAILER BRAKE

If your trailer has trailer brakes, you can apply the Manual Trailer Brake from the steering wheel to allow smooth braking independent of the vehicle brakes. Press and hold the right thumb control to manually apply the trailer brakes.

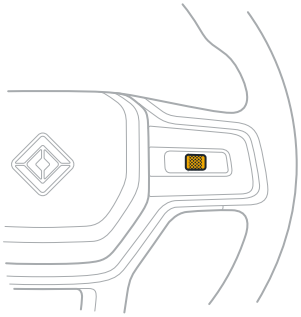

> **NOTE**
> The Manual Trailer Brake only applies the brakes to the trailer, not the vehicle.

Manual Cruise Control

Manual Cruise Control is only available in Towing mode. Manual Cruise Control maintains a target speed and allows you to remove your foot from the accelerator pedal.

To turn on Manual Cruise Control, push the drive stalk all the way down once and then release. The vehicle chimes and then maintains the current target speed. The target speed appears in a circle at the top of the driver display.

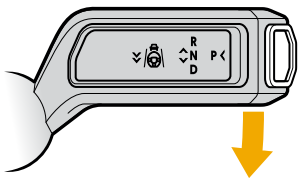

To turn off Manual Cruise Control, push the drive stalk up or press the brake pedal.

Manual Cruise Control disengages when you apply the Manual Trailer Brake or if a trailer sway event occurs. Use the vehicle brakes or the Manual Trailer Brake to slow down the vehicle.

CAUTION

- Manual Cruise Control won't maintain an appropriate distance from a vehicle that is ahead of you in the current lane.
- If you drive uphill or downhill while using Manual Cruise Control, the vehicle may not maintain the target speed.

Service and Maintenance

TIRES

Tires and Wheels

TIRE PRESSURE AND TIRE CARE

Check the inflation pressure of the tires, including the spare tire (if equipped), monthly with an accurate tire pressure gauge. The recommended cold inflation pressures are listed on the Tire and Loading Information label on the driver's door pillar.

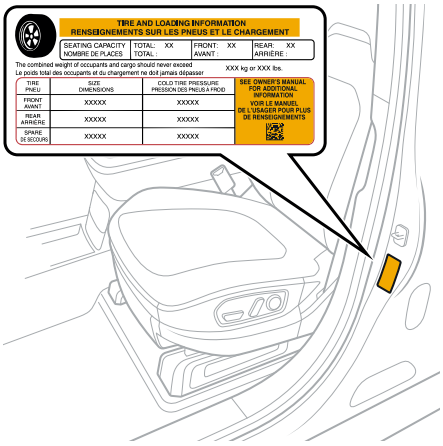

NOTES

- You can use the air compressor to inflate the tires.
- Use the tire sealant kit and optional spare tire if you need to seal or change a flat tire.

LOAD CAPACITY

The Tire and Loading Information label is on the driver's door pillar. The label describes the proper loading for the vehicle with or without a trailer.

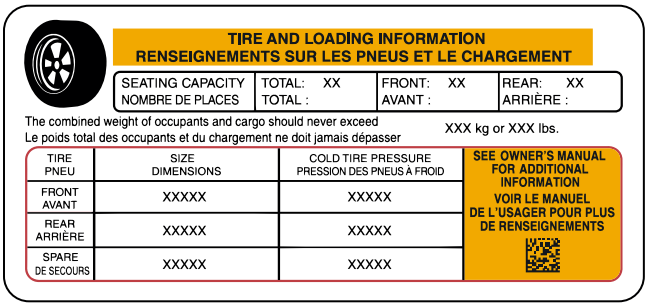

STEPS FOR DETERMINING THE CORRECT LOAD LIMIT

1. Locate the statement "The combined weight of occupants and cargo should never exceed XXX kg or XXX lbs" on your vehicle's placard.
2. Determine the combined weight of the driver and passengers that will be riding in your vehicle.
3. Subtract the combined weight of the driver and passengers from XXX kg or XXX lbs.
4. The resulting figure equals the available amount of cargo and luggage load capacity. For example, if the "XXX" amount equals 1,400 lbs (635 kg) and there are five 150 lb (68 kg) passengers in your vehicle, the available cargo and luggage load capacity is 650 lbs (1400-750 (5 x 150) = 650 lbs) or 295 kg (635-340 (5 x 68) =295 kg).
5. Determine the combined weight of luggage and cargo being loaded on the vehicle. That weight may not safely exceed the available cargo and luggage load capacity calculated in Step 4.
6. If your vehicle will be towing a trailer, load from your trailer will be transferred to your vehicle. Consult this manual to determine how this reduces the available cargo and luggage load capacity of your vehicle.

NOTES

- Trailer loads transfer to the vehicle. You must include the trailer load when calculating cargo capacity.
- The R1T can tow up to 11,000 lbs (4,989 kg) using a weight distributing hitch, and up to 5,000 lbs (2,267 kg) using a standard hitch.
- The Gross Vehicle Weight Rating (GVWR) of the R1T is 8,532 lbs (3870 kg).

WARNING

- Don't overload the tires. Overloading can cause tire failure, affect vehicle handling, and increase stopping distance.
- This vehicle is not designed to carry a slide-in camper.

TIRE SEALANT KIT AND SPARE TIRE

Vehicles that don't have a spare tire included or the off-road package come with a sealant kit.

Certain vehicles come with either a full-size spare tire or a compact spare tire, a jack, and other service tools.

Wheel Size	Tire Size
20 in	275/65 R20
20 in compact spare (if equipped)	T 195/70-20
21 in	275/55 R21
22 in	275/50 R22
22 in	HL 275/50 R22

DANGER

- Install the compact spare on the vehicle before you inflate it. Inflate the compact spare tire to the recommended pressure of 61 psi (420 kPa).
- Do not exceed the maximum speed of 50 mph (80 km/h) on the compact spare.
- Replace the compact spare with a full-size tire as soon as possible.

UNIFORM TIRE QUALITY GRADING

Quality grades can be found where applicable on the tire sidewall between tread shoulder and maximum section width. For example: Treadwear 200 Traction AA Temperature A. The U.S. Department of Transportation requires the following information:

Treadwear

The treadwear grade is a comparative rating based on the wear rate of the tire when tested under controlled conditions on a specified government test course. For example, a tire graded 150 would wear under one-and-a-half (1-1/2) times as well on the government course as a tire graded 100. The relative performance of tires depends upon the actual conditions of their use, however, and may depart significantly from the norm due to variations in driving habits, service practices and differences in road characteristics and climate.

Traction – AA, A, B, and C

The traction grades from highest to lowest are AA, A, B, and C and they represent the tire's ability to stop on wet pavement as measured under controlled conditions on specified government test surfaces of asphalt and concrete. Tires marked C may have poor traction performance.

WARNING

The traction grade assigned to this tire is based on braking (straight ahead) traction tests and does not include cornering (turning) traction.

Temperature - A, B, and C

The temperature grades are A (the highest), B, and C, representing the tire's resistance to the generation of heat and its ability to dissipate heat when tested under controlled conditions on a specified indoor laboratory test wheel. Sustained high temperature can cause the material of the tire to degenerate and reduce tire life, and excessive temperature can lead to sudden tire failure.

The grade C corresponds to a level of performance which all passenger car tires must meet under the Federal Motor Vehicle Safety Standard No. 109. Grades A and B represent higher levels of performance on the laboratory test wheel than the minimum required by law.

WARNING

The temperature grade for this tire is established for a tire that is properly inflated and not overloaded. Excessive speed, under-inflation, or excessive loading, either separately or in combination, can cause heat buildup and possible tire failure.

SNOW TRACTION DEVICES

If you drive in a location that requires snow traction devices, refer to the following table for the appropriate snow traction device for your tire size.

Tire Size	Snow Traction Device
275/65 R20	Only use government approved textile-based snow traction devices on the 275/65 R20 tires. **CAUTION** Don't use snow chains or cables on the 275/65 R20 tires. Metal snow traction devices can damage the vehicle body. Damage caused by snow traction devices is not covered by the New Vehicle Limited Warranty.
275/55 R21 275/50 R22	• Use low profile (16 mm or smaller) snow cables. • Install the low profile cables on the rear tires. • Ensure the vehicle is in a four-wheel drive mode such as the All-Purpose drive mode.

TIRE MARKINGS

The following image describes tire markings for a typical tire. The positions of the tire markings may vary by tire manufacturer.

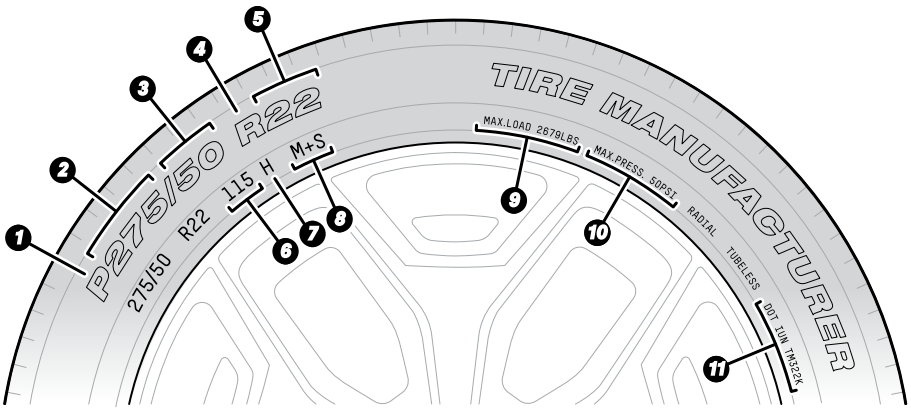

Item	Description
1	Tire type. A "P" marking indicates a passenger tire. A "HL" marking indicates a high load tire.
2	Nominal width in millimeters, measured from the outer edges of the sidewall.
3	Nominal aspect ratio (%). This describes the height of the tire expressed as a percentage of the tire width.
4	Internal construction. The "R" indicates a radial ply tire.
5	Rim diameter in inches
6	Load index
7	Speed symbol
8	Mud and snow grading
9	Maximum load rating
10	Maximum permissible inflation pressure
11	US DOT tire identification number

GLOSSARY OF TIRE TERMINOLOGY

Term	Definition
Accessory weight	The combined weight of factory-installed equipment (in excess of standard items that may be replaced)
Bead	The part of the tire next to the rim, constructed of steel wires that are wrapped or reinforced by ply cords
Bead separation	A breakdown of the bond between bead components
Bias ply tire	A pneumatic tire constructed of ply cords laid at alternate angles that are substantially less than 90 degrees to the tread centerline
Carcass	The tire structure, except the tread and sidewall rubber, which bears the load when inflated
Chunking	The breaking away of pieces of the tread or the sidewall
Cold tire pressure	The tire pressure when the vehicle has been parked for 3 hours or more, or driven for less than 1 mi (1.6 km)
Cord	The strands that form the plies in the tire
Cord separation	The parting of cords between adjacent rubber compounds
Curb weight	The weight of the vehicle with standard equipment and properly filled fluids
Groove	The space between two adjacent tire tread ribs
Inner liner	The layers that form the inside surface of a tubeless tire containing the inflating medium
Inner liner separation	The parting of the inner liner from the cord material in the tire carcass
Light truck (LT) tire	A tire that a manufacturer designates for use in lightweight trucks or multipurpose passenger vehicles
Load rating	The maximum load for a tire at the maximum permissible inflation pressure
Maximum inflation pressure	The maximum permissible cold tire inflation pressure
Maximum load rating	The load rating for a tire at the maximum permissible cold tire inflation pressure
Passenger car tire	A tire intended for use on passenger vehicles and trucks that have a gross vehicle weight rating (GVWR) of less than 10,000 lb (4356 kg)
Ply	A layer of rubber-coated parallel cords.

Term	Definition
Ply separation	A parting of the rubber compound between adjacent tire plies
Pneumatic tire	A mechanical device constructed of rubber, chemicals, fabric, steel, and other materials. When mounted on an automotive wheel, the device provides traction and contains the gas or fluid that sustains the load of the vehicle.
Radial ply tire	A pneumatic tire that contains ply cords that extend to the beads and are laid at alternate angles substantially less than 90 degrees to the tread centerline
Recommended inflation pressure	The cold tire inflation pressure recommended by Rivian. This information is printed on the tire placard on the inside of the door pillar.
Rim	The metal support for a tire assembly where the tire beads are seated
Section width	The linear distance between the exteriors of the sidewall of an inflated tire. The distance excludes elevations from labeling, decoration, or protective bands.
Sidewall	The section of the tire between the tread and the bead
Tire placard	The label that is permanently attached to the inside of the door pillar that describes the original equipment tire sizes, recommended inflation pressures, and loading capacity
Tread	The section of the tire that contacts the road surface
Treadwear indicators (TWI)	The projections within the tire grooves that are designed to provide a visual indication of the tire tread wear
Vehicle maximum load on the tire	The load on an individual tire that is determined by distributing the maximum loaded vehicle weight on each axle and dividing by two

Tire Pressure Monitoring System

The vehicle is equipped with a Tire Pressure Monitoring System (TPMS) with individual tire pressure display. If one of the tires is significantly under-inflated, a low tire pressure indicator appears on the driver display.

Each tire, including the spare (if provided), should be checked monthly when cold and inflated to the inflation pressure recommended by the vehicle manufacturer on the vehicle placard or tire inflation pressure label. (If your vehicle has tires of a different size than the size indicated on the vehicle placard or tire inflation pressure label, you should determine the proper tire inflation pressure for those tires.)

As an added safety feature, your vehicle has been equipped with a Tire Pressure Monitoring System (TPMS) that illuminates a low tire pressure telltale when one or more of your tires is significantly under-inflated.

Accordingly, when the low tire pressure telltale illuminates, you should stop and check your tires as soon as possible, and inflate them to the proper pressure.

Driving on a significantly under-inflated tire causes the tire to overheat and can lead to tire failure. Under-inflation also reduces fuel efficiency and tire tread life, and may affect the vehicle's handling and stopping ability.

> **NOTE**
>
> The TPMS is not a substitute for proper tire maintenance, and it is the driver's responsibility to maintain correct tire pressure, even if under-inflation has not reached the level to trigger illumination of the TPMS low tire pressure telltale.

TPMS MALFUNCTION INDICATOR

Your vehicle has also been equipped with a TPMS malfunction indicator to indicate when the system is not operating properly. The TPMS malfunction indicator is combined with the low tire pressure telltale. When the system detects a malfunction, the telltale will flash for approximately one minute and then remain continuously illuminated. This sequence will continue upon subsequent vehicle start-ups as long as the malfunction exists.

When the malfunction indicator is illuminated, the system may not be able to detect or signal low tire pressure as intended. TPMS malfunctions may occur for a variety of reasons, including the installation of replacement or alternate tires or wheels on the vehicle that prevent the TPMS from functioning properly. Always check the TPMS malfunction telltale after replacing one or more tires or wheels on your vehicle to ensure that the replacement or alternate tires and wheels allow the TPMS to continue to function properly.

TPMS SENSOR AUTOMATIC LEARNING PROCESS

The vehicle is equipped with TPMS sensors in the valve stem of each wheel. When you start driving, the sensors automatically connect to the TPMS module and begin the automatic learning process, which takes less than 10 minutes. After the learning process finishes, the TPMS sensor transmits the pressure values for each of the front and rear tires to the in-vehicle displays.

SPARE TIRE TPMS SENSOR

The full-size spare tire (if equipped) has a TPMS sensor that remains passive until you install the full-size spare as a driving wheel. After installing the full-size spare tire, you may have to drive for up to 10 minutes to allow the TPMS sensor to complete the automatic learning process.

The compact spare tire (if equipped) doesn't have a TPMS sensor and does not display tire pressure.

NOTES

- To avoid damage to the TPMS sensor, replace the valve stem cap to keep dirt away from the valve and sensor.
- If the tire is warm, fill the tire to 4 psi (27 kPa) above the recommended cold tire placard pressure because the tire pressure decreases when the tire cools. The low pressure warning is not active if the tire is warm and the pressure is above the cold tire placard pressure value.
- You may have to drive above 18 mph (30 km/h) for up to 10 minutes before the vehicle displays a pressure.

DANGER

An underinflated tire may fail, which could cause a sudden loss of vehicle control that may result in personal injury or death.

CAUTION

- Don't use the Tire Pressure Monitoring System as a pressure gauge when you fill the tires.
- The Tire Pressure Monitoring System isn't designed for aftermarket wheels.
- If you replace the tires, use the same size and style as the tires provided by Rivian.

Seal a Flat Tire

WARNING

Never service the vehicle on a narrow shoulder, near oncoming traffic, or on soft terrain.

CAUTION

- Use the Rivian-supplied tire sealant kit for roadside emergencies only. After using the tire sealant kit to temporarily fix a flat tire, contact Rivian as soon as possible to repair the tire.
- Tire sealant only repairs holes in tire tread. If a hole appears in any other part of the tire, such as the sidewall, or exceeds 0.25 in (6 mm) in diameter, contact Rivian.

To seal a hole in a flat tire using the tire sealant kit:

1. Find a safe, level location.
2. Put the vehicle in **Park**.
3. Turn on the hazard lights.

4. Locate the tire sealant kit.
   - Remove the tire sealant kit from the driver-side Gear Tunnel storage compartment.

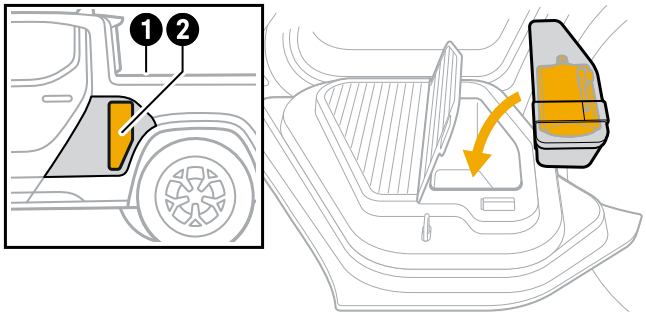

Item	Description
1	Gear Tunnel door release button
2	Tire sealant kit

5. Remove the cap from the tire valve stem.
6. Use the included valve core removal tool to remove the valve core from the tire valve stem. Save these parts for reinstallation.
7. Allow the tire to fully deflate.

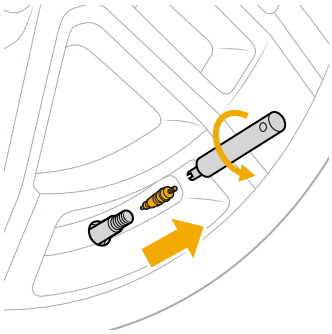

8. Push the tire sealant hose over the tire valve stem.
9. Pull open the cap on the tire sealant pouch and insert the nozzle into the tire sealant hose.
10. Squeeze the entire contents of the tire sealant pouch into the tire.
11. Remove the tire sealant pouch and hose from the valve stem.
12. Reinstall the valve core into the valve stem with the included tool.
13. Reinflate the tire with the air compressor.
14. Install the red valve cap included in the tire sealant kit to identify the repaired tire.
15. Drive for 5 minutes to distribute sealant throughout the tire. Then check to ensure the tire is properly inflated.

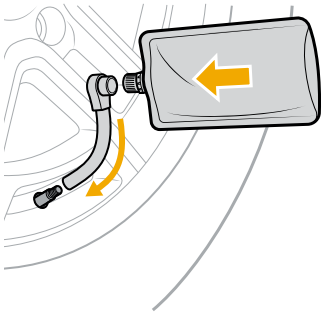

Change a Tire

DANGER

To avoid damage to the vehicle and injury to people nearby, follow these safety precautions when you change a tire.

- Find a safe location and ensure the surface is flat, firm, and high-friction.
- Don't service the vehicle on a narrow shoulder, near oncoming traffic, or on soft terrain.
- Don't place the tire jack over a grate or manhole cover.
- Don't place supports such as wooden blocks under the tire jack.

CAUTION

- The Rivian Tire Service Kit should only be used for roadside emergencies to change a flat or damaged tire on a Rivian vehicle. Contact Rivian for other types of service or repair.
- The Rivian Tire Service Kit is designed to lift a Rivian vehicle using the vehicle jack points only. Don't lift any other vehicle or cargo using the Rivian Tire Service Kit.

NOTES

The full-size spare tire, compact spare tire, and tire service kit are optional items and must be purchased separately.

You may be able to seal a flat tire as a temporary repair.

PREPARE THE VEHICLE

1. Find a safe, level location.
2. Go to **Drive Modes**. Choose **All-Purpose**, and then choose **Standard** under **Ride Height**.
3. Put the vehicle in **Park**.
4. Turn on the hazard lights.
5. Ensure all passengers exit the vehicle and stay in a safe location.

PREPARE THE SPARE TIRE

1. Access the spare tire compartment in the truck bed.
   a. Ensure that the truck bed is empty, and that there aren't any objects on the spare tire compartment lid.

      > **NOTE**
      > Unlock and remove the rear Cargo Crossbar if needed.

   b. Open the tailgate.
   c. Lift the release lever to open the spare tire compartment lid.
   d. Push the spare tire compartment lid to a vertical position to remove or replace the spare tire.

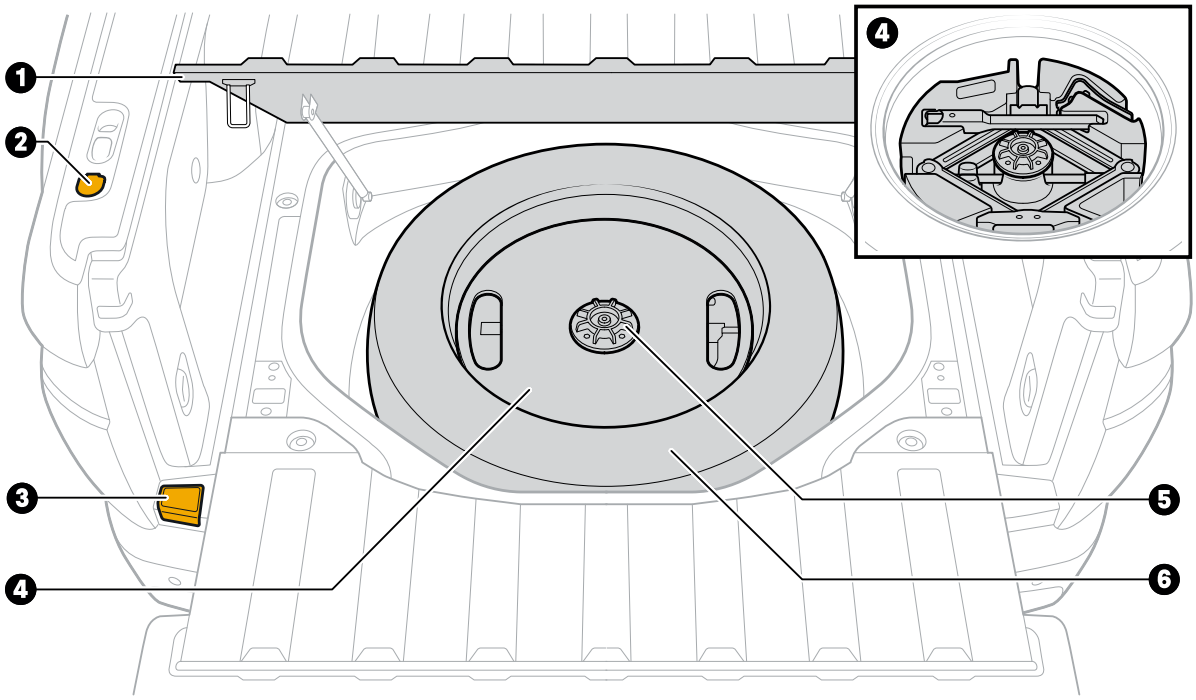

Item	Description
1	Spare tire compartment lid
2	Tailgate release button
3	Spare tire compartment release lever
4	Tire service kit (includes tire jack and tools)
5	Spare tire wing nut
6	Spare tire

2. Remove the tire service kit from the spare tire.
   a. Unfasten the spare tire wing nut and remove the tire service kit.
   b. Use the hex hole on the spare tire wing nut to unscrew and remove the tire service kit retention rod.
   c. Save the wing nut and retention rod for reinstallation.

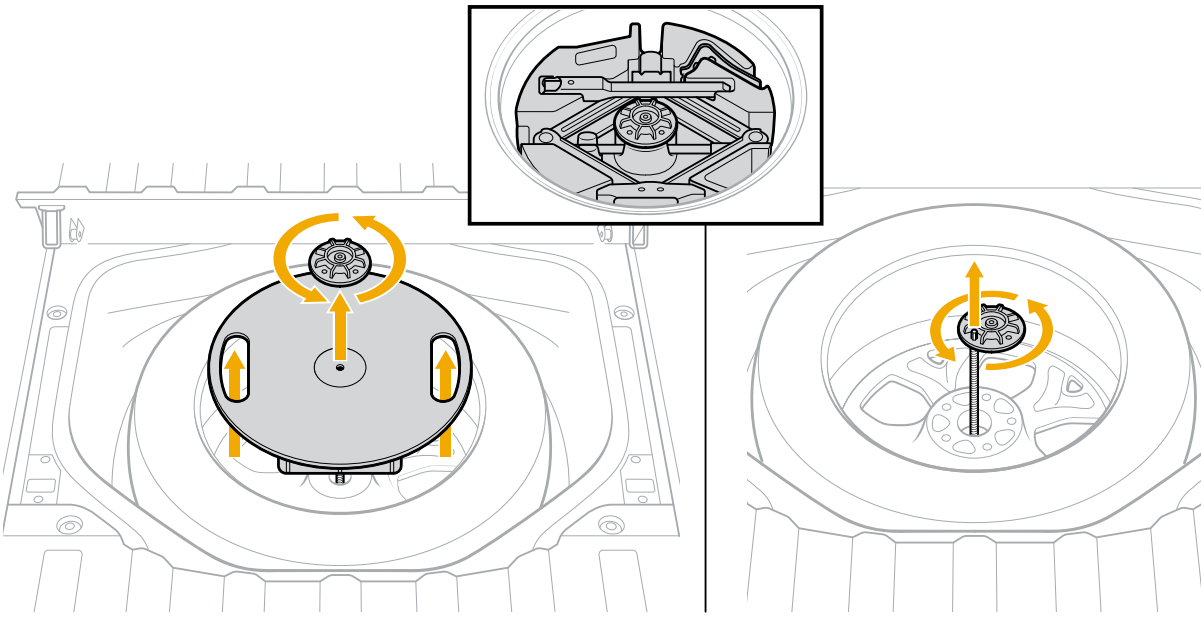

3. Remove the spare tire.
4. If you're using the full-size spare tire, inflate the tire to the recommended pressure (listed on the Tire and Loading Information label on the driver's door pillar).

CAUTION

Inflate the compact spare tire after you install it on the vehicle. See Remove and Replace a Wheel.

LIFT THE VEHICLE WITH THE TIRE SERVICE KIT

2021 to Mid-2023 Version

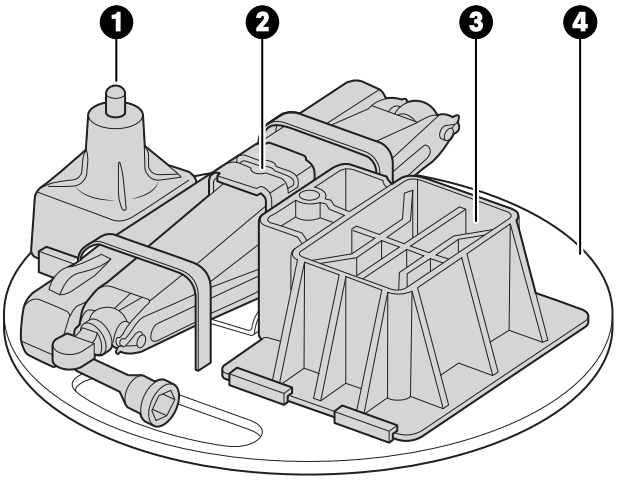

Item	Description
1	Jack adapter (alignment pin at top)
2	Tire jack and tools
3	Jack riser base
4	Storage disc

CAUTION

- Always use the jack adapter to prevent damage to the vehicle when you lift the vehicle with the Rivian-supplied tire jack.
- Don't use the jack adapter with other scissor or hydraulic jacks.

1. Go to **Drive Modes** in the center display. Choose **All-Terrain** (under **Off-Road** on Quad Motor vehicles). Then choose **Highest** under **Ride Height**.
2. After the suspension has finished adjusting to Highest, go to **Settings**. Choose **Vehicle**. Then choose **Service**. Turn on **Tire Change** mode.

NOTE

When Tire Change mode is on, automatic suspension adjustments pause and ride height can't be changed.

3. Secure the vehicle by placing wheel chocks diagonally opposite the tire to be changed.

WARNING

The electronic park brake is only on the rear wheels.
If you lift a rear wheel, the vehicle may roll.

4. Locate the vehicle jack point closest to the tire you're changing. There is a jack point behind each front tire and in front of each rear tire, near the rocker panel.

DANGER

To avoid damage to the vehicle and injury to people nearby, only place the tire jack under the vehicle jack point. Don't place the tire jack under other locations.

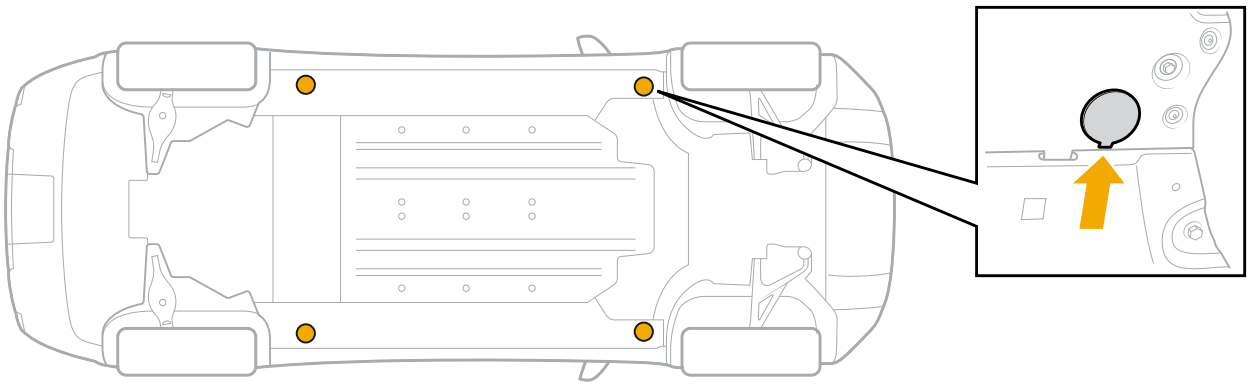

5. Remove the jack point cover by applying force to the inner edge.
6. If replacing a rear tire, slide the jack riser base (3) out of the storage disc (4) included in the tire service kit. Then place the jack on top of the riser base.

NOTE

If replacing a front tire, don't use the riser base.

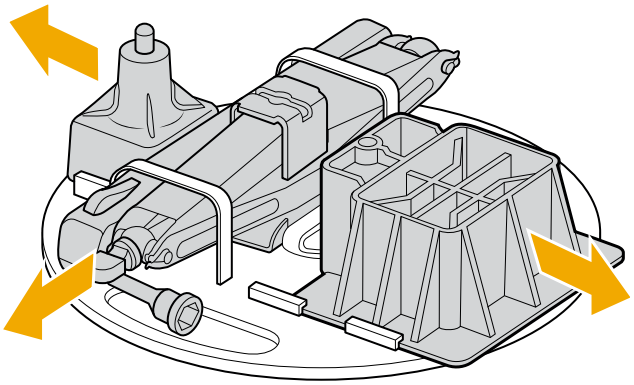

7. Align the top of the jack adapter (1) with the hole at the vehicle jack point.

8. Place the tire jack (2) under the jack adapter.

> **NOTE**
> Don't place the storage disc under the tire jack.

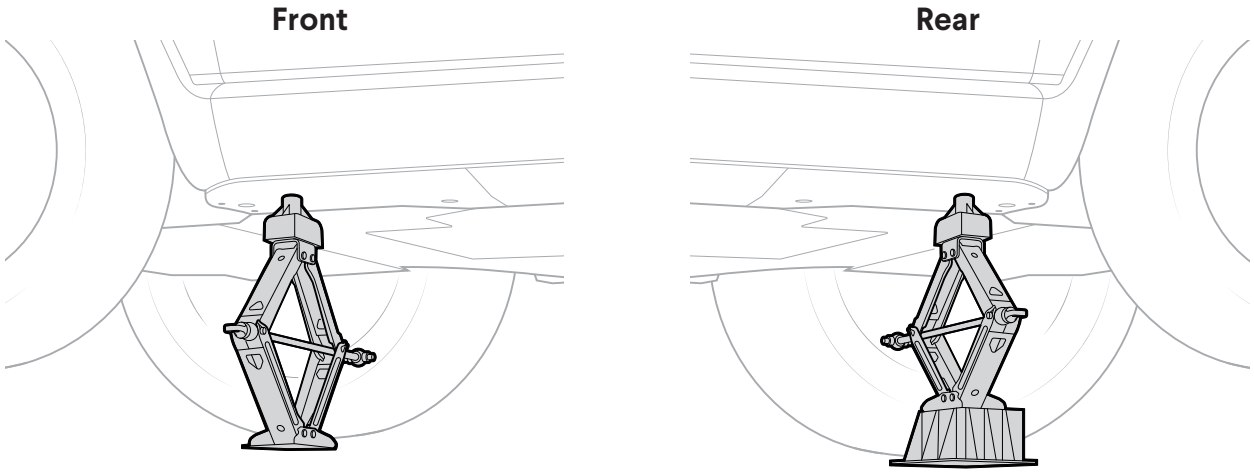

9. Assemble the jack handle.

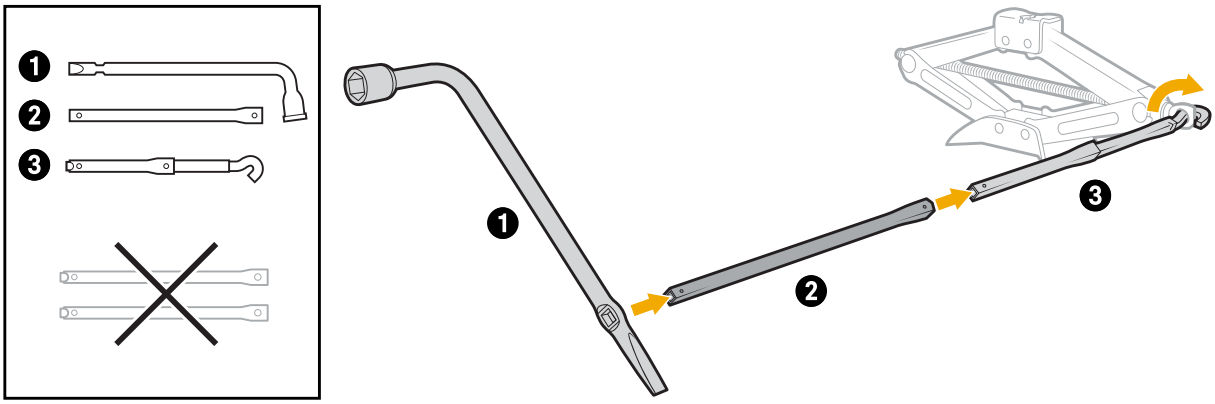

10. Insert the jack handle into the tire jack. Then turn the handle to raise the jack slightly.

> **DANGER**
> To avoid damage to the vehicle and injury to people nearby, ensure that the jack is straight and the jack adapter is level and aligned with the opening in the vehicle jack point. The jack may slip if not aligned and level.

11. If the jack begins to tilt, lower the jack. Then reposition the jack rearward approximately 2 in (5 cm) and try again.

Mid-2023 (and Later) Version

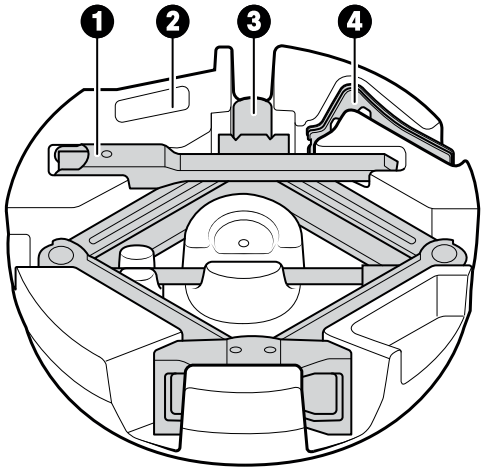

Item	Description
1	Tire jack handle
2	Tire service kit storage tray
3	Tire jack (alignment pin at top)
4	Wheel chocks

1. Go to **Drive Modes** on the center display. Choose **All-Terrain** (under **Off-Road** on Quad Motor vehicles). Then choose **Highest** under **Ride Height**.
2. After the suspension has finished adjusting to Highest, go to **Settings**. Choose **Vehicle**. Then choose **Service**. Turn on **Tire Change** mode.

> **NOTE**
> When Tire Change mode is on, automatic suspension adjustments pause and ride height can't be changed.

3. Remove the wheel chocks from the storage tray.
4. Secure the vehicle by placing wheel chocks diagonally opposite the tire you're changing.

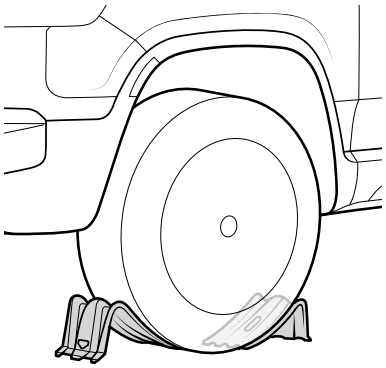

> **WARNING**
> The electronic park brake is only on the rear wheels. If you lift a rear wheel, the vehicle may roll.

5. Locate the vehicle jack point closest to the tire you're changing. There is a jack point behind each front tire and in front of each rear tire, near the rocker panel.

DANGER

To avoid damage to the vehicle and injury to people nearby, only place the tire jack under the vehicle jack point. Don't place the tire jack under other locations.

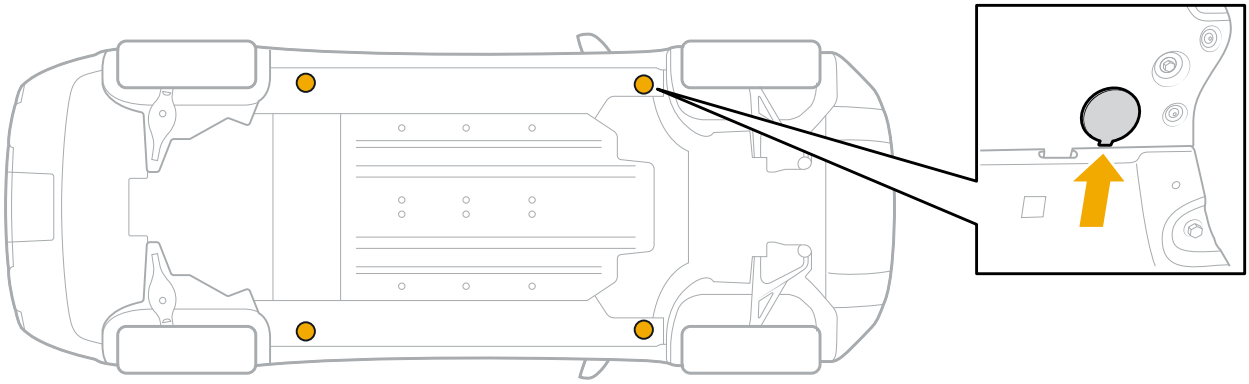

6. Remove the jack point cover by applying force to the inner edge.
7. Remove the tire jack and handle from the storage kit.
8. Position the tire jack under the jack point.
9. Align the top of the tire jack with the hole at the vehicle jack point.

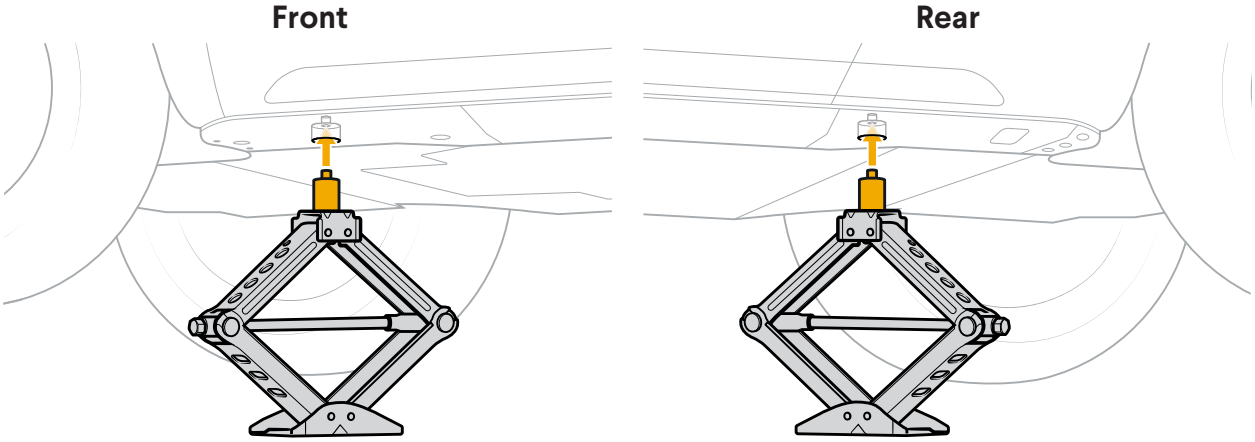

DANGER

To avoid damage to the vehicle and injury to people nearby, ensure that the jack is straight and the pin at the top of the tire jack is level and aligned with the opening in the vehicle jack point. The jack may slip if not aligned and level.

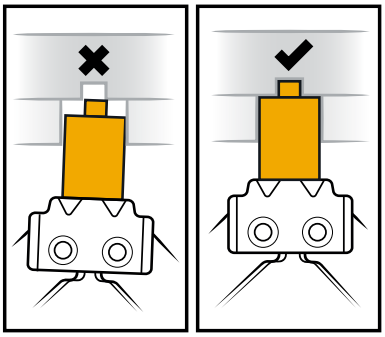

10. Insert the jack handle into the tire jack. Then turn the handle to raise the jack slightly.
11. If the jack begins to tilt, lower the jack. Then reposition the jack rearward approximately 2 in (5 cm) and try again.

REMOVE AND REPLACE A WHEEL

DANGER

To avoid damage to the vehicle and injury to people nearby, follow these safety precautions while the vehicle is supported by the tire jack.

- Don't place any part of your body under the vehicle while it's lifted.
- Be cautious around the lifted vehicle and the jack. Don't push or pull against the vehicle. If a wheel is stuck and can't be removed, contact Rivian.

Remove a Wheel

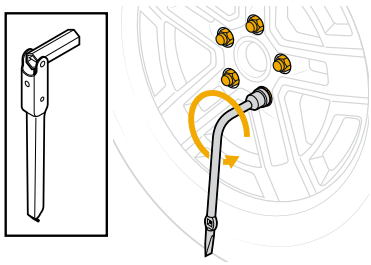

1. Turn on **Tire Change** mode and place the tire jack under the jack point. See Lift the Vehicle with the Tire Service Kit.
2. Raise the jack to lift the vehicle slightly, keeping the tire on the ground.
3. Loosen the lug nuts counterclockwise a half-turn with a lug wrench.
4. Raise the jack to lift the vehicle so the tire doesn't touch the ground.
5. Fully loosen and remove the lug nuts.
6. Remove the wheel from the vehicle by gripping the tread of the tire and pulling it straight out.

Install a New Wheel

CAUTION

If you're using the compact spare tire to temporarily replace a flat tire, contact Rivian as soon as possible to replace the tire. The compact spare tire is for roadside emergencies only.

1. Lift the wheel and align the wheel studs with the holes in the rim.
2. Push the wheel onto the hub. Ensure the wheel is fully seated to the hub.
3. Reinstall the lug nuts and tighten them by hand.
4. If you're using the compact spare tire, inflate the tire to the recommended pressure (listed on the Tire and Loading Information label on the driver's door pillar).

   WARNING

   Keep your hands and fingers away from the tire during inflation or deflation to avoid a pinch hazard.

5. Lower the jack until the tire touches the ground but doesn't carry the full weight of the vehicle.

6. Torque the lug nuts in an alternating star pattern to 190 Nm. If you don't have a torque tool, tighten until the lug nuts can't be turned further.

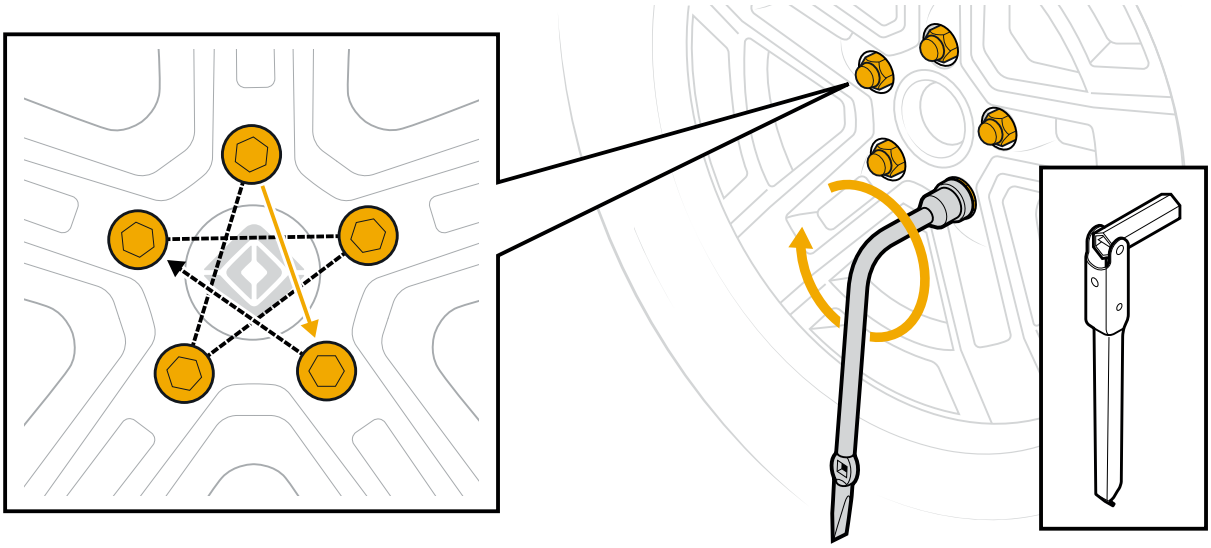

7. Lower the jack until the full weight of the vehicle rests on the tires.
8. Remove the tire service kit and wheel chocks.
9. If you're using the full-size spare tire, swap the center cap from the removed wheel to the new wheel.

Store the Removed Wheel

1. Go to **Settings** in the center display. Choose **Vehicle**. Then choose **Service**. Turn off **Tire Change** mode.
2. Lower the vehicle to improve access to the spare tire compartment. Go to **Drive Modes**. Choose **All-Purpose**, and then choose **Standard** under **Ride Height**.

> **NOTE**
> Ensure the area beneath the vehicle is clear before lowering.

3. Store the removed wheel and the tire service kit in the spare tire compartment in the truck bed.
   a. Place the wheel with the outside of the rim facedown.
   b. Reinstall the tire service kit retention rod.
   c. Replace the tire service kit and secure it with the spare tire wing nut.
4. Choose your previous drive mode and ride height.
5. Drive for up to 10 minutes to allow the TPMS sensors to update the tire pressure values.

> **NOTE**
> The compact spare tire doesn't have a TPMS sensor. Tire pressure values won't update until the compact spare tire is replaced.

6. Repair or replace the removed tire once you've reached your destination.

Lift the Vehicle with a Non-Rivian Jack

Before you lift the vehicle, you must remove the underbody panels if you don't have a Rivian-supplied tire jack or if you need to lift multiple tires.

CAUTION

Don't place a jack directly on the underbody panels or the vehicle battery.

PREPARE TO LIFT THE VEHICLE

1. Put the vehicle in **Park**.
2. If you're lifting a single tire, secure the vehicle by placing wheel chocks diagonally opposite the tire to be changed.

   WARNING

   The electronic park brake is only on the rear wheels.
   If you lift a rear wheel, the vehicle may roll.

3. Go to **Drive Modes** in the center display. Choose **All-Terrain** (under **Off-Road** on Quad Motor vehicles). Then choose **Highest** under **Ride Height**.
4. After the suspension has finished adjusting to Highest, go to **Settings**. Choose **Vehicle**. Then choose **Service**. Turn on **Tire Change** mode.

   NOTE

   When Tire Change mode is on, automatic suspension adjustments pause and ride height can't be changed.

5. Remove the underbody panels to access the frame rails. See Remove the Front Panels and Remove the Rear Panels.

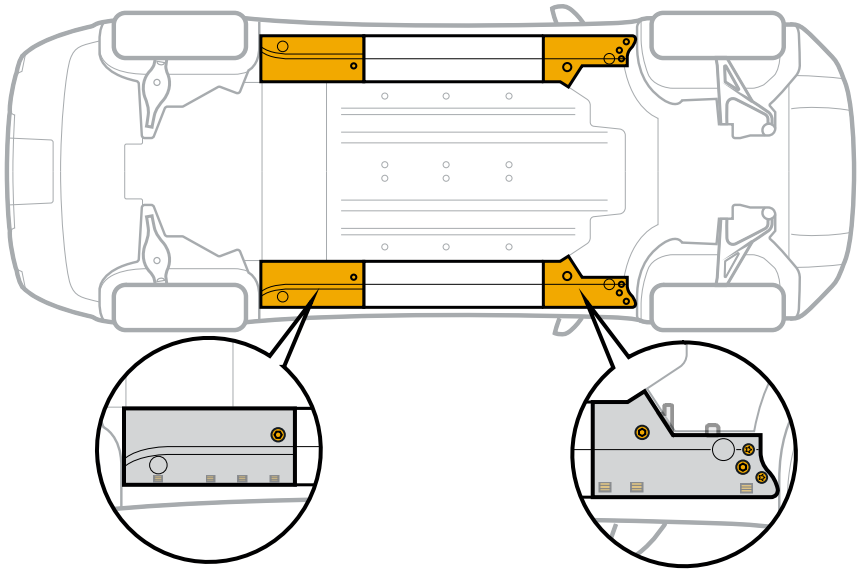

REMOVE THE FRONT PANELS

1. Remove the 4 bolts on the front panel.
   a. Use a T20 Torx screwdriver to remove the 2 small bolts.
   b. Use a 10 mm socket to remove the 2 large bolts.
   c. Save the bolts for reinstallation.
2. Grab the outer edge of the panel and pull down gently to release the clips.

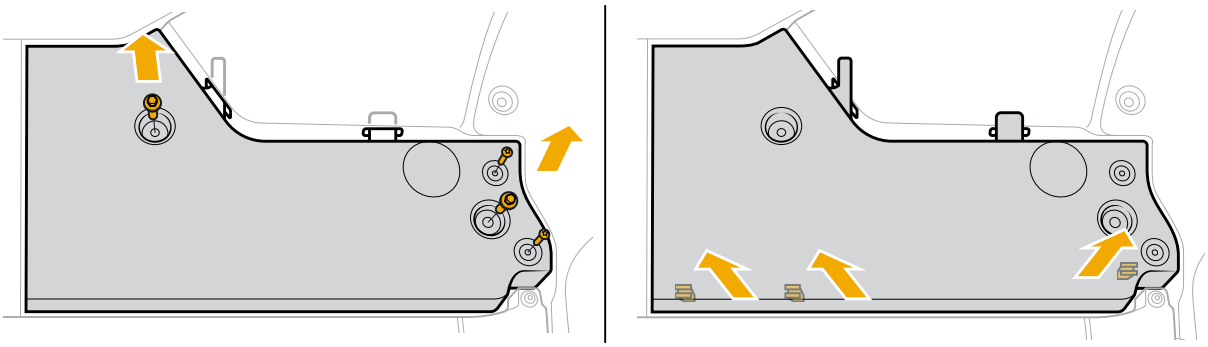

3. Pull down further to remove the panel from the double-sided tape. Save the panel for reinstallation.
4. Repeat for the other front panel as needed.

REMOVE THE REAR PANELS

1. Use a 10 mm socket to remove the bolt from the rear panel. Save the bolt for reinstallation.
2. Grab the outer edge of the panel and pull down gently to release the clips.

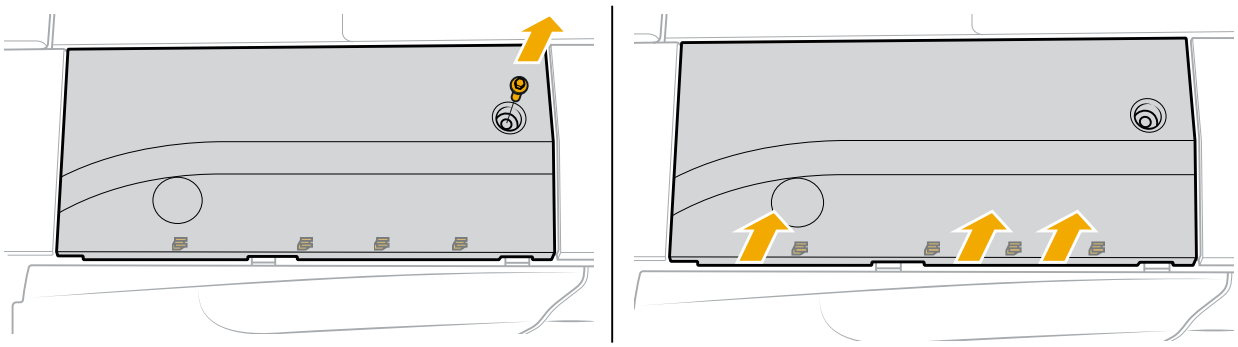

3. Pull down further to remove the panel from the double-sided tape. Save the panel for reinstallation.
4. Repeat for the other rear panel as needed.

JACK AND LIFT THE VEHICLE

1. Use a jack that is rated to lift at least 3 tons with at least 23 in (59 cm) of range.
2. Use a rubber pad to protect the underbody finish.

3. Place the jack under the lift point on the frame rail.

Front

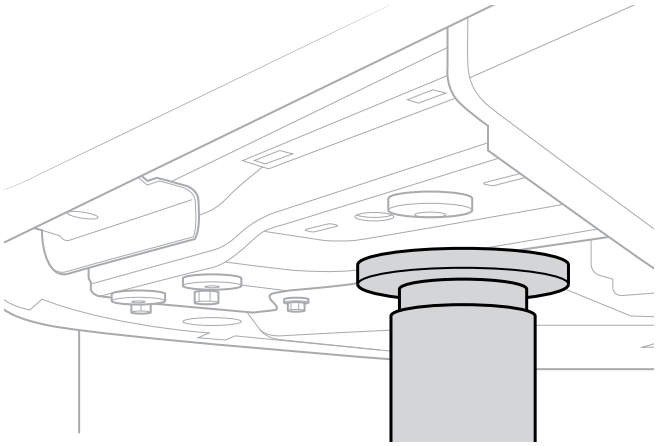

Rear

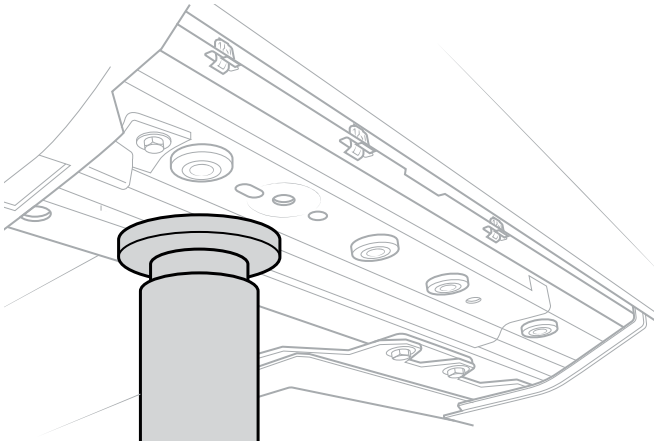

DANGER

Don't place any part of your body under the vehicle while it's lifted.

4. Follow the instructions included with the jack to raise and lower the vehicle.

REINSTALL THE PANELS

1. Clean the frame rail surface with an alcohol swab or wipe to ensure the double-sided tape will adhere.
2. Reinstall the panels.
   a. Align the tabs on the panel to the slots on the vehicle.

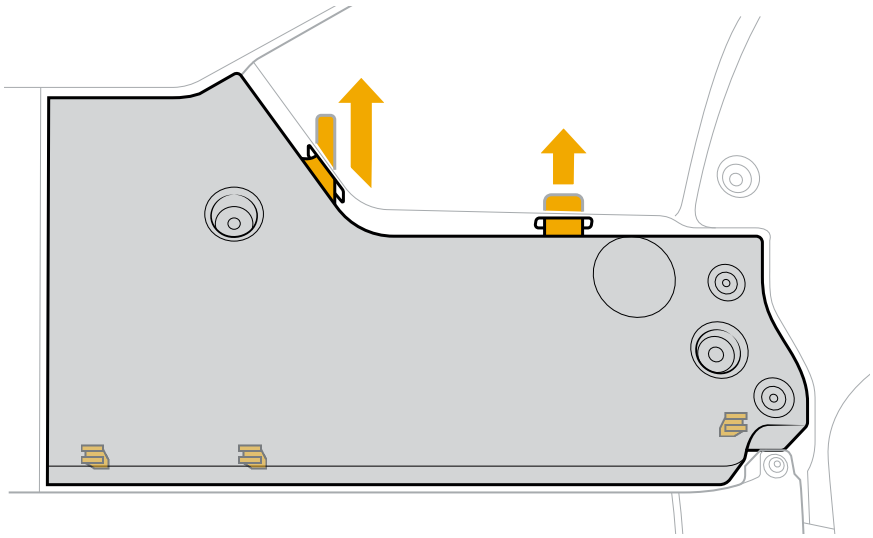

   b. Secure the clips on the panel.

> **NOTE**
> If any clips are broken, contact Rivian to replace the panel. Secure the panel with the remaining clips and bolts until a replacement is available.

   c. Reinstall the large and small bolts on each front panel.
   d. Reinstall the bolt on each rear panel.
3. Go to **Settings** ⚙. Choose **Vehicle**. Then choose **Service**. Turn off **Tire Change** mode.
4. Choose your previous drive mode and ride height.

21 inch Road Wheel Center Cap

You can remove the aerodynamic wheel covers if desired. You can use the optional 21 inch Road Wheel Center Cap accessory to cover the wheel hub after you remove the covers.

> **NOTE**
> If you remove the aerodynamic wheel covers, your vehicle range will be reduced.

REMOVE THE AERODYNAMIC WHEEL COVER

The brake calipers may be hot after you drive the vehicle. To avoid burns, remove the aerodynamic wheel covers when the wheels and brakes are cool.

Remove the aerodynamic wheel cover one spoke at a time.

1. Put your hand into one of the wheel spokes and pull the cover away from the spoke.

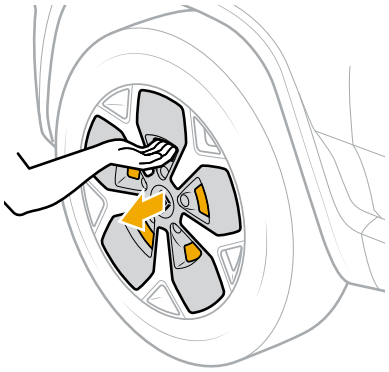

2. Move to the next wheel spoke, pull the cover, and then continue around the wheel.

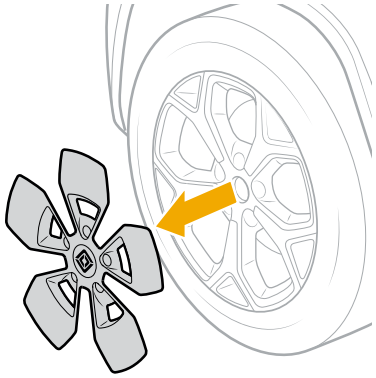

INSTALL THE WHEEL CENTER CAP

IMPORTANT

The optional 21 inch Road Wheel Center Cap is a different part from the aerodynamic wheel cover. Don't remove the center cap from the aerodynamic wheel cover.

1. Align the wheel center cap on the wheel hub.
2. Push evenly on the top of the cap until it snaps into place.
3. Install the wheel center cap on the remaining wheels.

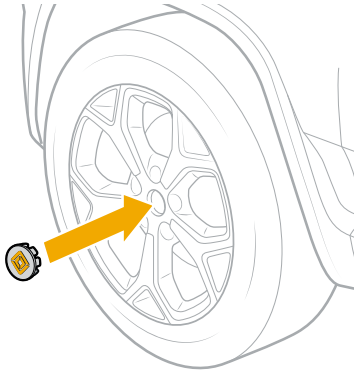

Clean the 21 inch Road Wheel

If your vehicle is equipped with the 21 inch road wheel and aerodynamic wheel covers, you can remove the aerodynamic wheel covers to clean the wheel and covers.

WARNING

Remove the aerodynamic wheel covers and clean the wheels after driving off-road. Mud and rocks can be trapped between the wheel cover and the wheel, causing noise and wheel imbalance.

REMOVE THE AERODYNAMIC WHEEL COVER

WARNING

The brake calipers may be hot after you drive the vehicle. To avoid burns, remove the aerodynamic wheel covers when the wheels and brakes are cool.

Remove the aerodynamic wheel cover one spoke at a time.

1. Put your hand into one of the wheel spokes and pull the cover away from the spoke.

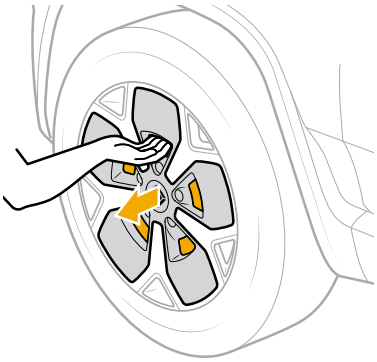

2. Move to the next wheel spoke, pull the cover, and then continue around the wheel.

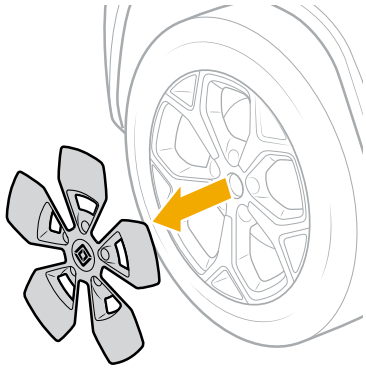

CLEAN THE WHEELS AND INSTALL THE COVERS

1. Clean the wheel with a hose or pressure washer as described in Exterior Cleaning.
2. When the wheel is clean, align each aerodynamic wheel cover over the wheel spokes and then press the cover to securely install it on the wheel.

ROUTINE MAINTENANCE

Wiper Blades

To access or change the wiper blades:

1. Choose **Mirrors and Wipers** from the center display.
2. Enable **Wiper Service mode** to move the wipers out of the wiper park position.
3. Bend the wiper arms at the hinge as needed.
4. Remove and replace the wiper blades. Set the new blades on the windshield.

WARNING

To prevent damage to the vehicle's hood, position both wiper blades on the windshield before exiting Wiper Service mode.

5. Disable **Wiper Service mode** from the center display to return the wipers to the wiper park position.

NOTE

Use a j-hook hybrid wiper blade.

Wiper Location	Wiper Size
Front driver's side	24 in (600 mm)
Front passenger's side	18 in (450 mm)

Windshield Washer Fluid

SEASONALITY AND TEMPERATURE RATING

When you refill windshield washer fluid, use fluid rated for the season and temperature range where the vehicle is located. Ensure that you dilute concentrated formulas. Always refer to the temperature rating and instructions on the fluid bottle before you purchase or use windshield washer fluid.

IMPORTANT

Windshield washer fluid ratings vary. Cold weather–rated fluid performs best in colder temperatures, but is unnecessary in milder temperatures.

Windshield washer fluid rated for milder temperatures typically contains much lower levels of volatile organic compounds (VOCs). VOCs contribute to ozone levels and smog, particularly when VOCs evaporate in warmer temperatures. Use of cold weather–rated fluid when the temperature is warmer can release higher levels of VOCs into the air. To avoid releasing excess VOCs, use fluid rated for your current season and temperature.

REFILL WINDSHIELD WASHER FLUID

DANGER

Concentrated windshield washer fluid is highly flammable and may ignite if exposed to heat.

Don't pour or spill concentrated windshield washer fluid onto hot vehicle components or other areas that could heat the concentrated fluid.

WARNING

After driving, vehicle components may be hot.

Before touching any area of the vehicle, ensure the area is cool to the touch. Don't pour any fluid into a hot area of the vehicle.

IMPORTANT

Some windshield washer fluid must be diluted. Follow the manufacturer's instructions on the bottle.

Dilute the fluid in a separate container. Don't attempt to dilute fluid inside the vehicle reservoir.

Refill the windshield washer fluid when it gets low.

1. Park the vehicle on a level surface. Ensure the vehicle is off.
2. Open the hood. Locate the reservoir cap.
3. Pry up the cap to access the opening.
4. Pour in windshield wiper fluid until the foam float rises up or you see the reservoir is full.
5. Replace the cap and press firmly to secure.

CLEANING

Interior Cleaning

CAUTION

- Don't use bleach, ammonia, or any other harsh cleaners. These products can cause damage to the vehicle interior.
- Don't use cleaners, sealants, or conditioners that contain wax or petroleum.
- While cleaning beneath the front passenger seat, don't remove the cover from the AC/DC inverter. The cover protects the inverter from contamination, such as accidental spills.

To maintain the interior of your vehicle, clean it periodically, as needed.

- Remove trash and debris.
- Remove the floor mats and vacuum the floors and seats.
- Vacuum the floor mats and return them to the vehicle.
- Wipe the seats, interior surfaces, and speaker grills with a damp cloth.

> **NOTE**
> Lightly dampen the cloth with water or a cleaner developed for the seat material. Don't spray cleaner or pour liquid directly onto the seats, and don't soak the cloth with cleaning solution.

- Wipe the rearview mirror and driver, center, and rear displays with a dry microfiber cloth.
- Clean the interior windows and windshield with a microfiber cloth dampened with an ammonia-free window cleaner. For tinted windows, make sure the cleaner is safe to use on them.

All-Weather Floor Mats

Floor mats attach to the floor with push tabs. Front mats have one push tab at each bottom corner. Rear mats have three push tabs along the side.

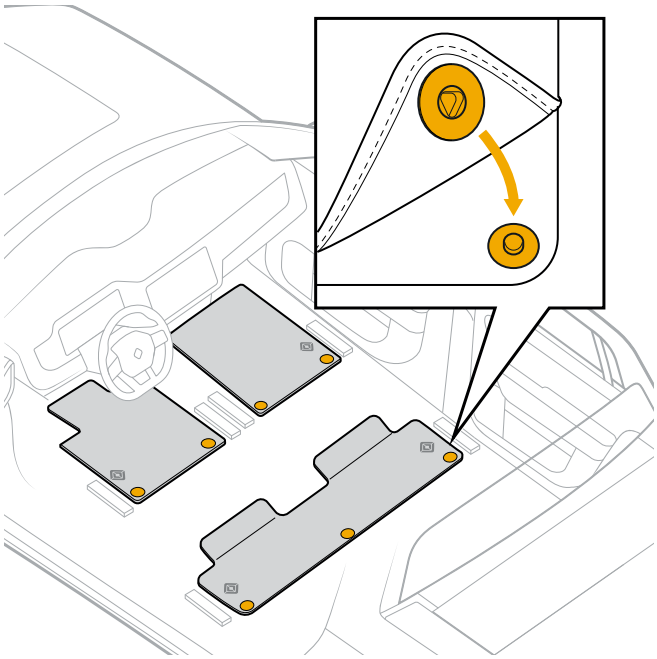

REMOVE THE FLOOR MATS

1. Pull up firmly on a section of the floor mat close to a push tab.
2. Remove one push tab at a time.

ATTACH THE FLOOR MATS

1. Align the floor mats with the push tabs on the floor. Ensure that the push tabs are above the corresponding tabs.
2. Press firmly to click the push tabs into place one at a time.

WARNING

Properly secure the floor mats to the floor. This keeps the mats in place so that they don't slide or lift up from the corners while you drive.

CLEAN THE FLOOR MATS

Shake or vacuum the floor mats to remove any debris. Floor mats can be washed with water and common cleaning solutions such as mild soap or carpet stain remover.

Exterior Cleaning

WASHING

To maintain the paint and coating on your vehicle, wash it before excessive dirt builds up. Roll up all windows and close and lock all doors. Don't use hot water, and don't wash the vehicle in direct sunlight.

CAUTION

Don't wax, wash, or coat the windshield with products containing water repellent. These products can affect rain detection, preventing the automatic wiper function from working correctly.

DANGER

- Before you wash the vehicle, ensure that the vehicle is not currently charging. Washing the vehicle while it charges creates an electrocution risk, which can lead to injuries as well as vehicle and property damage.
- Avoid spraying water at any electronics or exposed cabling.

Car Wash Mode

Car Wash mode is a vehicle Access and Security setting that you can turn on from the center display. When Car Wash mode is on, the climate system defaults to Air Recirculation to close outer vents and prevent water and suds from entering the vehicle. Car Wash mode does the following:

- Rolls up all windows
- Closes the charge port door if the vehicle isn't charging
- Mutes parking sensor alert chimes
- Prevents the door handles and charge port door from opening
- Prevents the automatic windshield wipers from activating
- Suppresses the automatic switching between Day and Night themes
- Suppresses proximity lock and unlock

NOTE

If the vehicle is in Car Wash mode, the exterior door handles don't present when unlocked. Push the front part of the handle and then pull the handle to open the door.

IMPORTANT

The vehicle speed must be below 12 mph (19 km/h) to enable Car Wash mode. Car Wash mode defaults to "off" after a vehicle restart.

Commercial Car Wash

You can use standard car wash services to clean the vehicle. Ensure that you observe any rules posted by the car wash, and that the vehicle's windows are fully up and side mirrors are folded in before entering the car wash. If you haven't turned on Car Wash mode, lock the vehicle to prevent the charge port door from opening.

For "touchless" car washes where you're not required to drive on a rail, put the vehicle in Park.

For car washes where you're required to drive on a rail, do the following:

1. From a Park position, turn on Car Wash mode.

IMPORTANT

If Vehicle Hold is engaged while in a Neutral or Drive position, press the brake to release Hold.

2. Put the vehicle in Neutral by using the drive stalk or choosing the on-screen button to Shift To Neutral.

CAUTION

When Car Wash mode is on and you are in Neutral, your vehicle will stay in Neutral even if you leave the driver's seat. The vehicle will not go into Hold or Park. Be cautious when using Car Wash mode in Neutral, and only use this mode on flat ground to prevent the vehicle from rolling.

Hand Wash

NOTE

You may have configured your User Profile setting that's linked to the Rivian mobile app. If you haven't turned on Car Wash mode, you can turn off *Bluetooth*® on your phone to prevent the handles and charge port door from potentially opening mid-wash.

You can use a hose or a standard pressure washer to wash the vehicle. Use a side-to-side sweeping motion to avoid prolonged concentrated pressure to a single area.

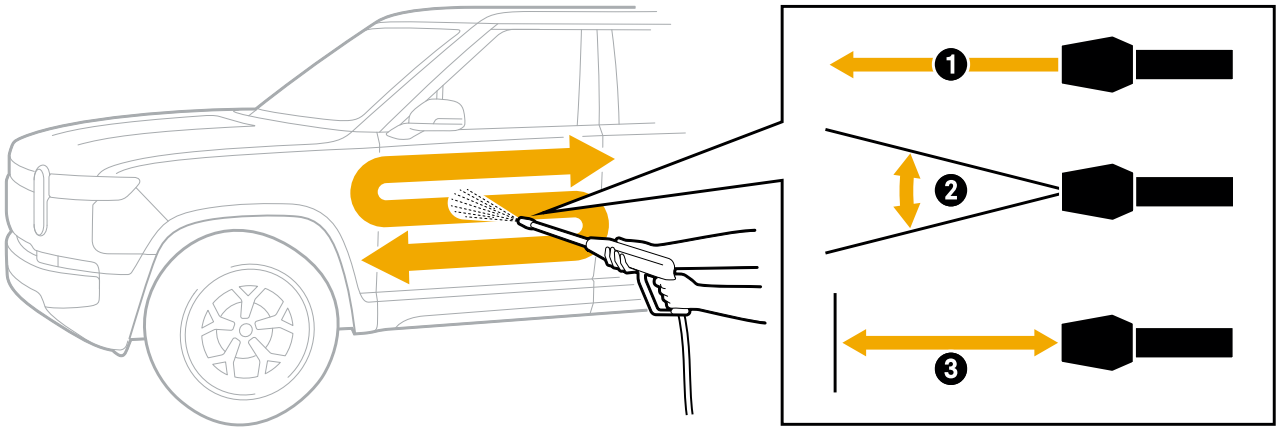

Item	Description	Value
1	Spray pressure	Maximum 1,100 psi
2	Spray angle	Minimum 25 degrees
3	Spray distance	Minimum 15 in (40 cm)

1. Rinse the vehicle thoroughly with a hose to wash away dirt and debris.
2. Remove leaves and other obstructions from the air intake cover to keep the heating and air conditioning systems running efficiently. The air intake cover looks like vents, and you can find it under the hood near the front windshield. You can occasionally remove the air intake cover to wash it more thoroughly with a hose and sponge.

CAUTION

- When the front trunk is open, don't direct a pressure washer or hose with a high water flow rate to the air intake cover. This may lead to degraded performance of the climate system.
- Repeated saturation of the air intake cover can affect the durability of the air filter, which is located below the air intake cover.
- The front trunk can be vacuum-cleaned or scrubbed with a soft, damp cloth.

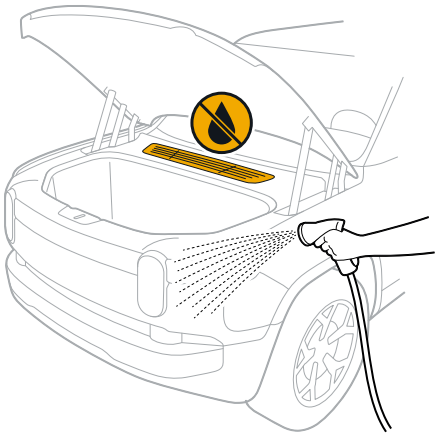

3. Use only detergent formulated for washing cars and a soft sponge to gently scrub away surface stains.
4. Soap and rinse sections of the vehicle at a time to prevent soap scum.
5. To prevent corrosion, flush the vehicle's underbody, fenders, brakes, and wheel wells with water to remove road buildup.

NOTE

Underbody washing is especially effective right after an off-road adventure through sand, salt, mud, or de-icer.

6. Dry the vehicle with a chamois or soft cloth.
7. Clean the windows and mirrors with a glass cleaner and soft cloth.
8. You can optionally drive around the block and apply the brakes in a normal fashion to properly dry them out after a wash.

Keep Pedestrian Audio Alert Speakers Clean

IMPORTANT

- The pedestrian audio alert feature emits a sound to help alert pedestrians about your moving vehicle. The speakers that emit the sound are located underneath the front and rear bumpers of the vehicle. Keep these speakers clean and free of obstructions. If you notice decreased volume with your vehicle's courtesy or alert sounds, you may need to use a tube brush to gently clean the speakers.
- Clean sound ports after severe weather that causes debris buildup or adventures that include driving off-road or across water.

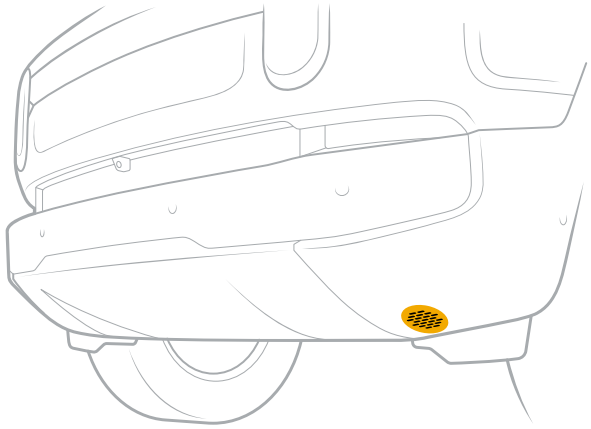

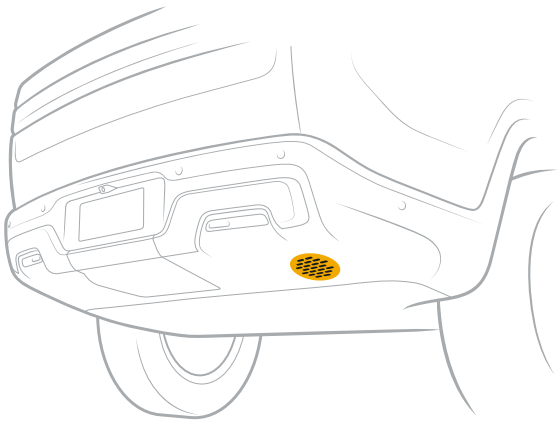

WAXING

While exterior coatings such as wax or ceramic aren't required, you can occasionally apply additional exterior coating to further protect the paint and prolong the new look of your vehicle. This also allows easier maintenance washing. Always apply exterior coatings when the vehicle is clean, dry, and cool. Never apply in direct sunlight.

COLD WEATHER CARE

If your vehicle is iced over, only use the climate control system such as heat and defrost to thaw surfaces.

CAUTION

- Don't pour hot water onto any glass surface to thaw the glass. This may cause the glass to crack.
- Don't use an ice scraper on plastic parts on the vehicle's exterior, such as the air intake cover and the trim near the windshield wipers. This may scratch or damage the plastic and nearby fixtures.

Remove Snow and Ice from the Headlights

Use warm water and a soft cloth to remove snow and ice from the headlights. You can also use a commercial deicer according to the product instructions.

CAUTION

Wipe the headlights gently. Ice scrapers, snow brooms, and dirt or debris below the snow or ice may scratch the lens surface.

NOTE

When the headlights are clean and dry, you can apply a ceramic or automotive hydrophobic coating to minimize ice buildup. Follow the product instructions. Coatings may impact lens opacity and headlight performance.

Troubleshooting and Help

TROUBLESHOOTING

Restart the Software

If the vehicle apps, connectivity, or displays don't work normally, you may need to restart the software.

1. Ensure the vehicle is in **Park**.
2. Find the two outermost control buttons on the steering wheel.
3. Press both buttons at the same time and hold for 15 seconds.

> **NOTE**
> The displays go dark for about one minute until the restart is complete.

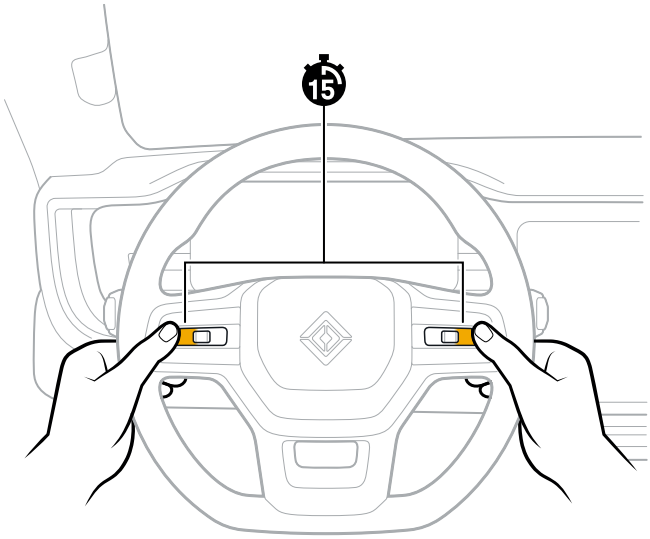

Restart the Vehicle

CAUTION

Contact Rivian before you restart the vehicle.

If the vehicle doesn't work normally after you restart the software, you may need to restart the vehicle.

1. Ensure the vehicle is in **Park** and not plugged in.
2. Find the left thumb control button on the steering wheel and the **Hazard Lights** button in the middle of the overhead console.
3. Press both buttons at the same time and hold for 15 seconds.

NOTES

The displays go dark, and then a progress indicator lets you know when the restart is complete.

If you accidentally press the **SOS** button, cancel the SOS call on the center display within 20 seconds, if possible. If there's an accidental SOS call, notify the SOS call operator to avoid first responders being dispatched.

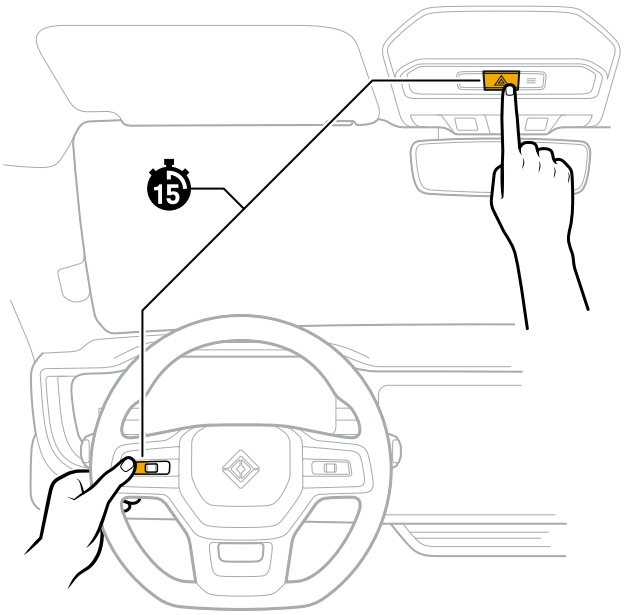

Jump-Start the 12 V Batteries

The vehicle has two 12 V batteries under the hood. Signs of discharged 12 V batteries include the following:

- The doors and storage areas don't unlock.
- The vehicle doesn't respond to the key fob.
- The lighting doesn't illuminate.
- The displays don't turn on.

DANGER

Never allow the jump cables to touch each other or any metal part of the vehicle.

CAUTION

Don't use a Rivian vehicle to jump-start another vehicle.

IMPORTANT

A successful 12 V battery jump start lets you open the doors and front trunk. It also lets you open the charge port door if you need to charge the high-voltage battery.

If the high-voltage battery state of charge is zero and you're not close enough to a charger, contact Rivian to transport the vehicle.

JUMP-START THE PRIMARY 12 V BATTERY

Before you begin, ensure that you have an adequate power source to jump-start a Rivian vehicle.

- If you're using a tow truck to jump-start, the tow truck must run until the Rivian vehicle powers up.
- If you're using a jump box, the jump box must maintain a steady voltage between 13 V and 16 V at 30 A.

To jump-start the primary 12 V battery:

1. Remove the trailer hitch cover to access the jump-start wire harness.
2. Remove the round access panel to the right of the trailer hitch.

3. Pull out the jump-start wire harness and remove the protective tape from the connectors.

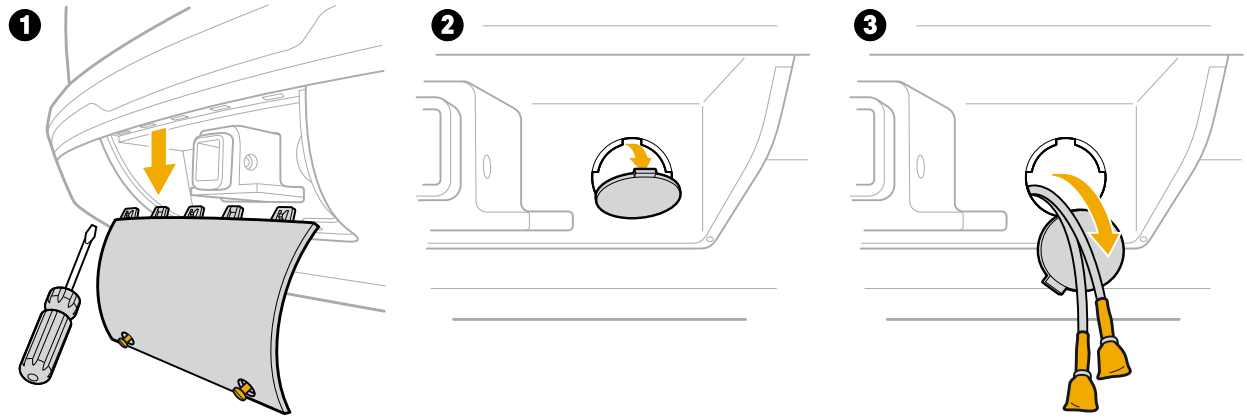

4. Connect the red positive lead (+) to the red lead on the jump-start wire harness.
5. Connect the black negative lead (-) to the black lead on the jump-start wire harness.

When the primary 12 V battery has enough power, you can unlock the vehicle to open the doors, front trunk, and charge port door.

If the lights don't work normally or you can't put the vehicle in Drive, jump-start the secondary 12 V battery.

If the high-voltage battery state of charge is zero and you're close enough to a charger:

1. Open the charge port door.
2. Plug in to the charger.
3. If needed, turn off the charge schedule in the **Energy** app on the center display.
4. Allow the vehicle to charge until the high-voltage battery reaches 25% state of charge.
5. Restart the vehicle.

After you jump-start the primary 12 V battery, contact Rivian to review the status of the 12 V battery system and reseal the jump-start wire harness connectors.

JUMP-START THE SECONDARY 12 V BATTERY

If the vehicle lights don't work normally or you can't put the vehicle in Drive after you jump-start the primary 12 V battery, you may need to jump-start the secondary 12 V battery.

Before you begin, ensure that you have an adequate power source to jump-start a Rivian vehicle.

- If using a tow truck to jump-start, the tow truck needs to run until the Rivian vehicle powers up.
- If using a jump box, it needs to maintain a steady voltage between 13 V and 16 V at 30 A.
- If you have two jump boxes, you can continue to charge the primary 12 V battery at the same time.

To jump-start the secondary 12 V battery:

1. Open the hood.
2. Remove the air intake cover by gently pulling up to release the clips.
3. Remove the air intake duct to access the 12 V batteries.

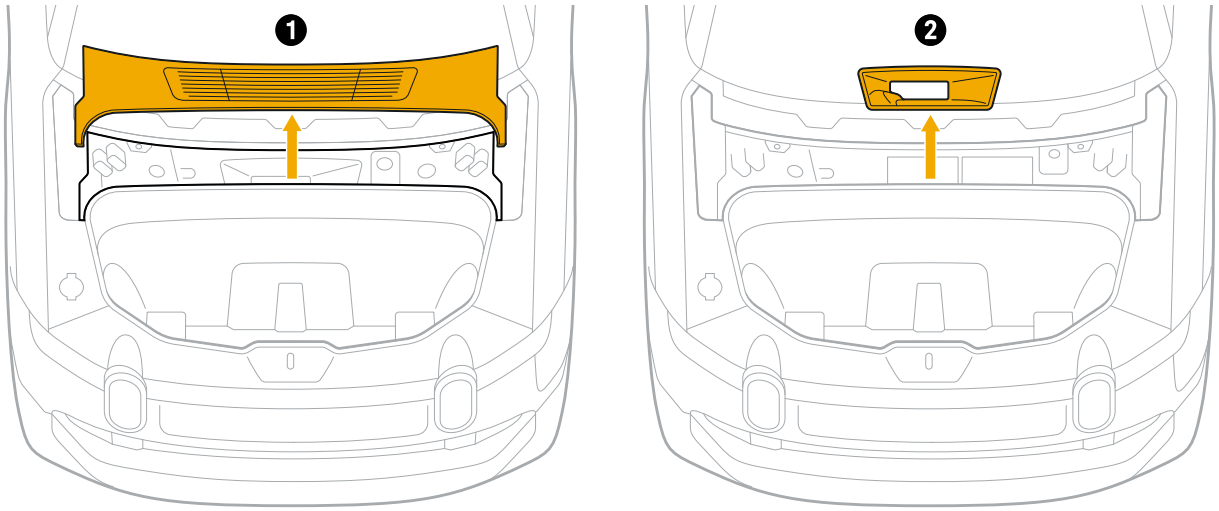

4. Remove the red cover from the secondary 12 V battery (closest to passenger side).

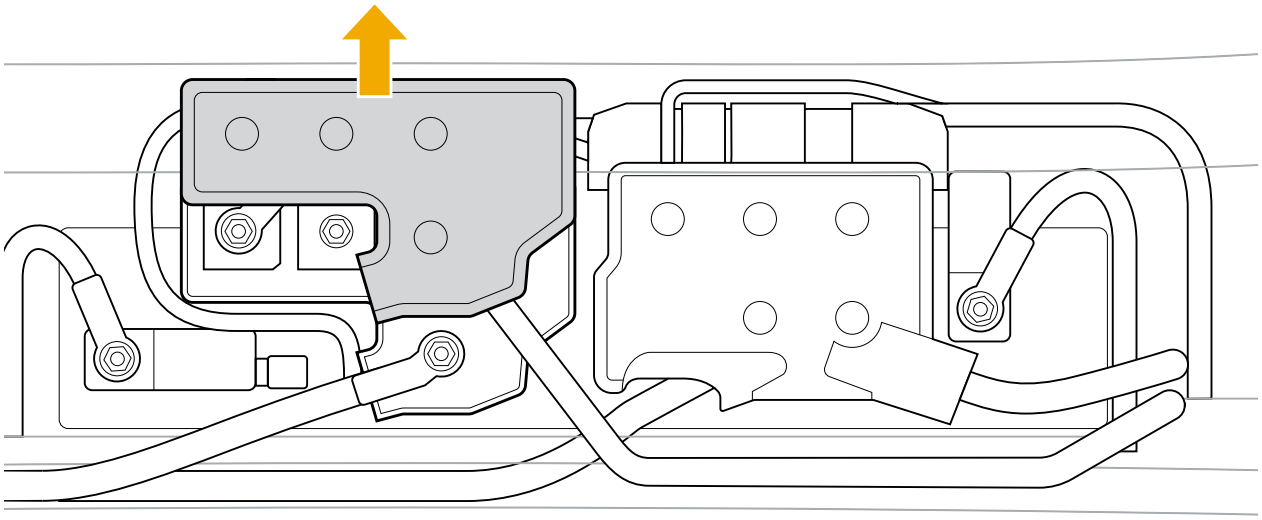

5. Connect the red positive (+) lead to one of the positive (+) terminals on the secondary battery.

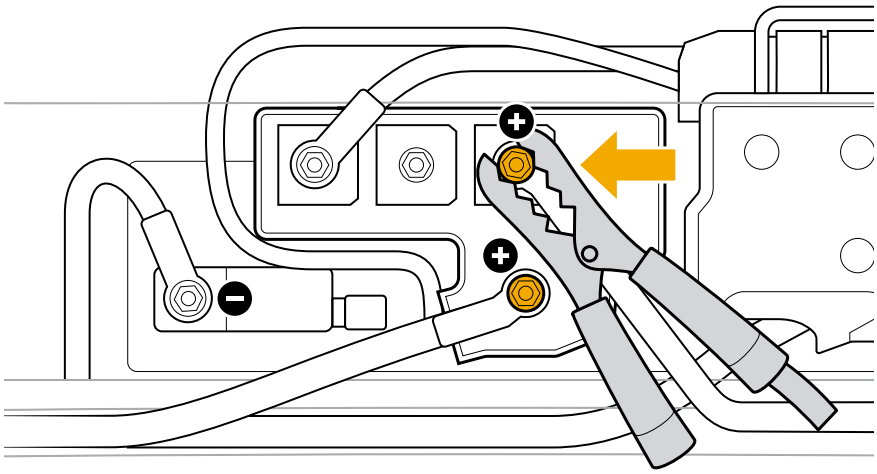

6. Connect the black negative (-) lead to the negative (-) terminal on the secondary battery.

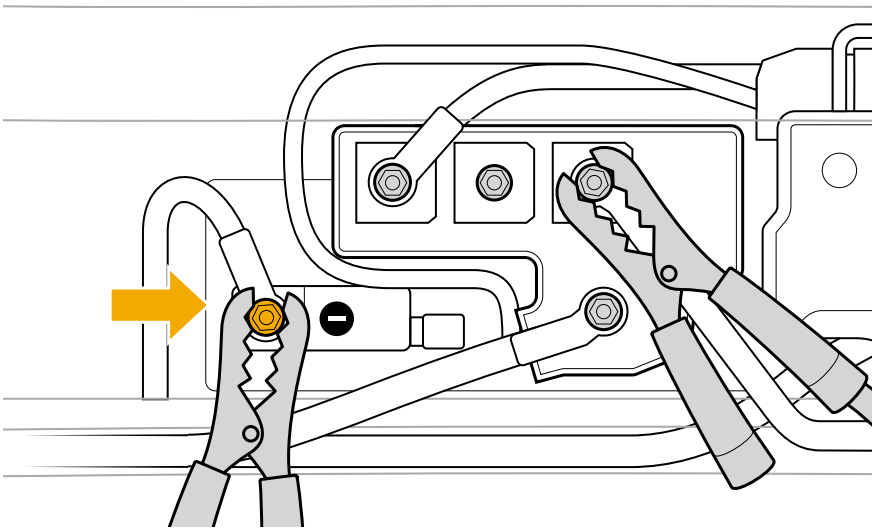

7. Allow the secondary battery to charge to a sufficient level. If you have a voltmeter, ensure the battery is charged to at least 5 V.
8. If you are plugged in to a vehicle charger, charge until the high-voltage battery reaches 25% state of charge.
9. Restart the vehicle.

If you can't restart or drive the vehicle, contact Rivian. You may need to transport the vehicle to a Rivian Service Center.

If the windows don't fully express close or they need calibration, reset the windows.

Manually Open the Hood

Follow these steps if the hood won't open normally:

1. Use a Torx (star) screwdriver with T20 and T25 bits to remove the screws from the inboard side of the left front wheel liner.

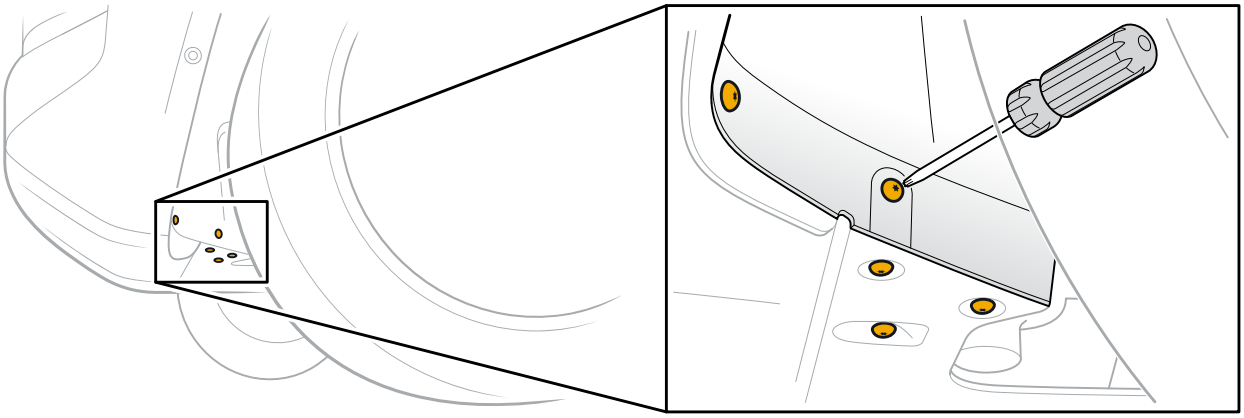

2. Lower the front skid plate to access the hood release cable.

> **NOTE**
> Remove extra screws as needed to improve access to the area.

3. Reach in and up to locate the hood release cable. Pull the cable to release the hood latch.

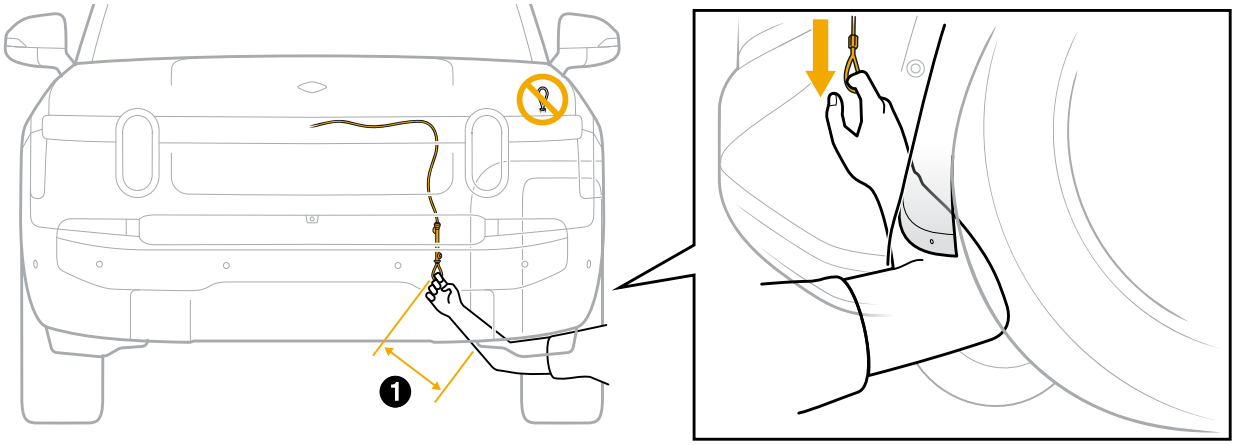

Item	Reach Distance (Approximate)
1	11 in (28 cm)

4. If the latch doesn't release, have a second person gently lift up and push down on the hood while you pull on the cable.

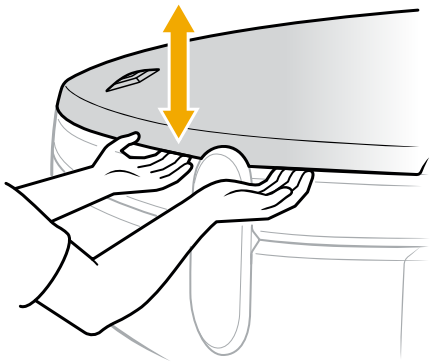

5. Replace the screws after the hood opens.

Manually Release the Charge Plug

If the charge plug won't release from the charge port, you can manually release it.

NOTES

- Always stop a charge session before you unplug from a DC fast charger. Go to **Energy** in the center display, and then choose **Stop Charging**.
- Ensure the vehicle is unlocked before you unplug from an AC charger.

1. Open the vehicle hood.
2. Remove the trim panel from the driver side of the vehicle. Pull up gently to release the clips.

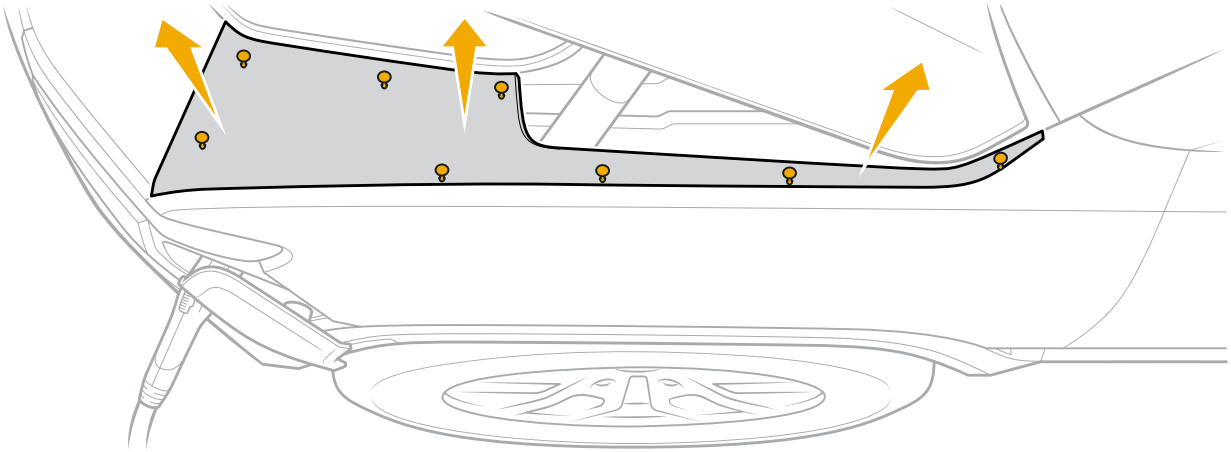

3. Gently pull the cable to release the charge plug.
4. Remove the charge plug from the charge port.
5. Replace the trim panel and secure the clips.
6. Close the hood.

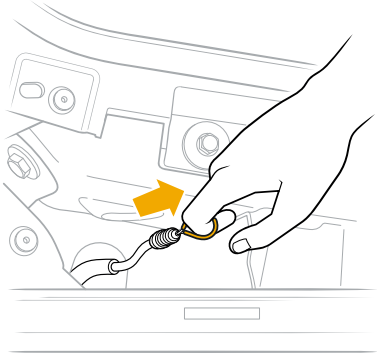

Calibrate the Driver's Seat or Steering Wheel

If Roomy entry and exit don't work or you're unable to save seat or steering wheel positions to your Driver Profile, it's likely calibration is lost. Do the following to recalibrate to the original factory settings.

1. Go to **Settings** ⚙ › **Vehicle** › **Service** on the center display.
2. Under Driver Position Calibration, select **Driver Seat** or **Steering Wheel**.
3. Follow directions on the display to complete the calibration.

If this doesn't solve the issue, contact Rivian Service.

NOTES

- You may want to sit in the passenger seat before you start calibration as it will provide easier access to the center display and will not interfere with the process.
- Calibration may affect existing Driver Profile seat and steering wheel settings, as well as Roomy entry and exit settings. If you notice these positions don't seem correct after calibration, readjust to your preference and save the new settings.
- In some cases, if the vehicle detects lost calibration, you'll see a notification on the driver display asking if you want to calibrate. Follow the directions on the display to complete the tasks.

Reset the Windows

If the windows don't fully express close or you get an error that says they need calibration, reset the windows.

1. If needed, unlock the passenger windows from **Access and Security** on the center display.
2. Lower the window until it completely opens.
3. Continue to hold the window switch down for five seconds.
4. Raise the window until it completely closes. If the window stops on the way up, return to step 2.
5. Continue to hold the window switch up for five seconds.
6. Ensure that express close works from the window switch.
7. Repeat steps 2-6 for each window that needs calibration.

Overheating

Extreme hot weather may cause the vehicle battery or powertrain components to overheat.

If your vehicle overheats, follow the instructions on the driver display.

System Failures

Contact Rivian Service to have the vehicle inspected if you notice any electrical, battery, or high-voltage issues. See Status Indicators for a list of potential issues.

Reporting Safety Defects in the United States

If you believe that your vehicle has a defect which could cause a crash or could cause injury or death, you should immediately inform the National Highway Traffic Safety Administration (NHTSA) in addition to notifying Rivian.

If NHTSA receives similar complaints, it may open an investigation, and if it finds that a safety defect exists in a group of vehicles, it may order a recall and remedy campaign. However, NHTSA cannot become involved in individual problems between you, your dealer, or Rivian.

CONTACT NATIONAL HIGHWAY TRAFFIC SAFETY ADMINISTRATION (NHTSA)

Call (toll-free)

Vehicle Safety Hotline (toll-free)

(888) 327-4236

TTY

(800) 424-9153

Write

Administrator
NHTSA
400 Seventh Street, SW
Washington, DC 20590

Website

You can also obtain other information about motor vehicle safety from this website:

http://www.safercar.gov

ROADSIDE ASSISTANCE

Transport the Vehicle

WARNING

Fire Hazard. Only transport the vehicle on a flatbed tow truck. Towing Rivian vehicles with any wheels on the ground can lead to significant damage and overheating. Extreme overheating can cause a fire.

NOTE

Damage caused by improper towing is not covered under warranty.

PREPARE THE VEHICLE FOR TOWING

1. Ensure the front wheels face forward and are parallel with the vehicle.
2. Secure the steering wheel with a holder or strap to keep the wheels straight.

CAUTION

To prevent damage, don't use j-hooks to connect to any suspension components.

3. Connect the front of the vehicle to the tow truck winch with 6 ft (1.8 m) endless loops or a nylon bridle through the lower control arms.

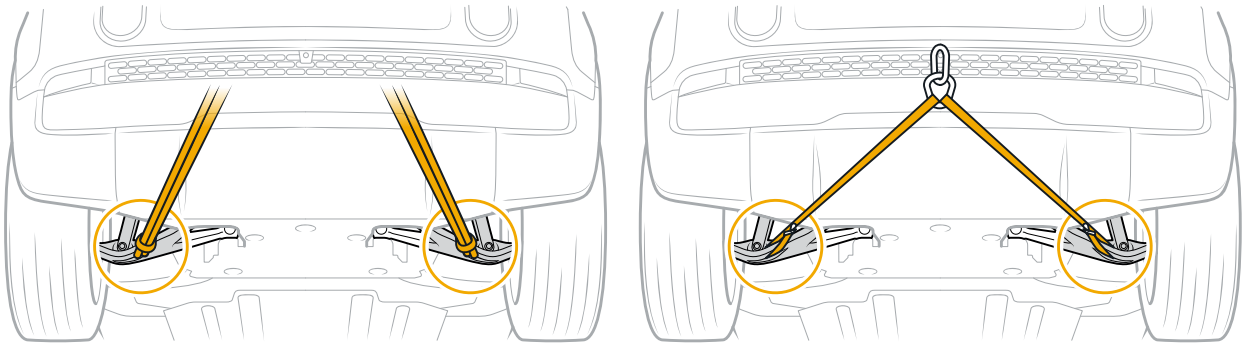

> **NOTE**
> If you can't tow from the front of the vehicle, you can connect to the trailer hitch to tow from the rear.

4. Press and hold the brake pedal.
5. Go to **Settings** on the center display.
6. Choose **Vehicle**. Then choose **Service**. Turn on **Park brake release**.

> **NOTE**
> Park brake release turns off after 15 minutes. You can also turn it off by putting the vehicle in **Park** or turning off **Park brake release** in the center display.

7. Release the brake pedal and confirm release of the electronic park brake.

   You can now load the vehicle onto the tow truck.

> **NOTE**
> If you can't release the electronic park brake, you need to lift the rear wheels to load the vehicle onto the tow truck.

CONNECT TO THE TRAILER HITCH

Connect to the trailer hitch when you can't tow from the front of the vehicle.

1. Ensure the front wheels face forward and are parallel with the vehicle.
2. Secure the steering wheel with a holder or strap to keep the wheels straight.
3. Remove the trailer hitch cover.
   a. Use a flathead screwdriver to loosen the two captive screws. Turn a quarter turn counterclockwise.
   b. Grip the cover and pull straight down.
4. Insert a nylon bridle or short endless loops through the trailer hitch (1).

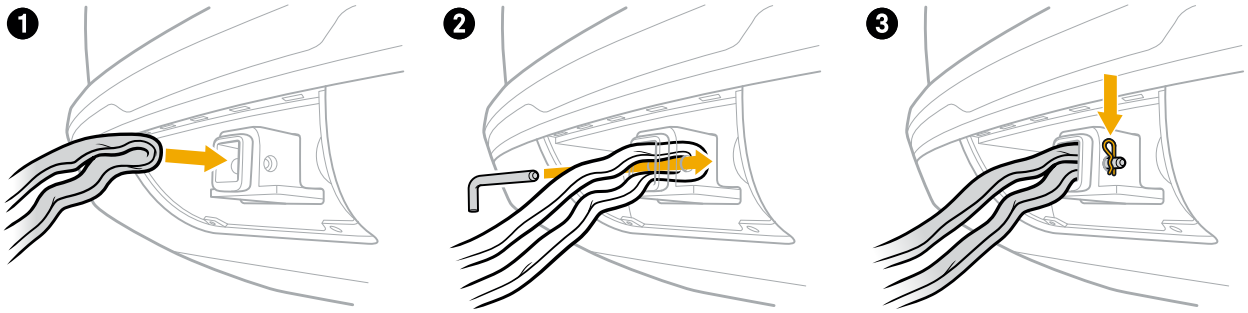

5. Insert the tow pin through the hitch to connect the bridle or loops (2), and then install the tow pin retaining clip (3).
6. Press and hold the brake pedal.
7. Go to **Settings** on the center display.
8. Choose **Vehicle**. Then choose **Service**. Turn on **Park brake release**.

> **NOTE**
> Park brake release turns off after 15 minutes. You can also turn it off by putting the vehicle in **Park** or turning off **Park brake release** in the center display.

9. Release the brake pedal and confirm release of the electronic park brake.

   You can now load the vehicle onto the tow truck.

> **NOTE**
> If you can't release the electronic park brake, you need to lift the rear wheels to load the vehicle onto the tow truck.

LIFT THE REAR WHEELS

If the battery is dead or you can't release the electronic park brake, lift the rear wheels to load the vehicle onto a tow truck.

DANGER

Secure the vehicle and connect it to the tow truck before you lift the rear wheels. The vehicle can roll when you lift the rear wheels.

CAUTION

Only lift the rear wheels to load the vehicle onto the tow truck. Don't tow the vehicle behind another vehicle or with two wheels on the ground.

1. Chock the front wheels to secure the vehicle.
2. Connect the vehicle to the tow truck using an endless loop through the front control arms or rear trailer hitch.
3. Lift the rear wheels using skates, a dolly, or a tow truck wheel lift.

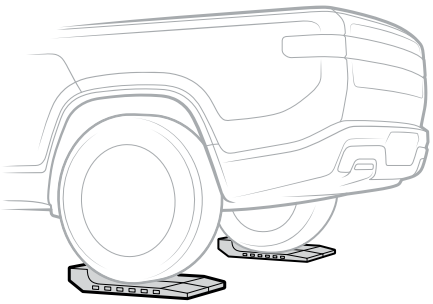

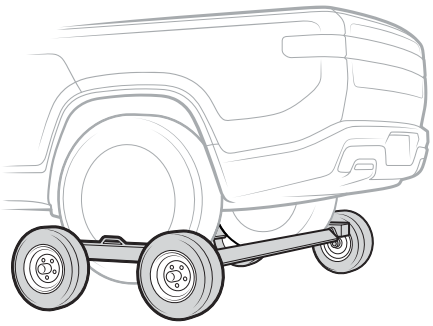

4. With the rear wheels off the ground, position the vehicle to be loaded onto the tow truck bed.

   You can now load the vehicle onto the tow truck.

   NOTE

   If using skates, use the skates to pull the vehicle all the way up the tow truck ramp.

LOAD THE VEHICLE ONTO THE TOW TRUCK

After you've connected the vehicle, you can load the vehicle onto a flatbed tow truck as follows:

1. Ensure the **Park brake release** is turned on or the rear wheels are lifted. See Prepare the Vehicle for Towing.
2. Remove the wheel chocks, if needed.
3. Use the tow truck winch to pull the vehicle onto the tow truck bed.
4. Pull at 5 mph (8 km/h) or less to prevent damage to the drivetrain.

> **NOTE**
> If you pull too fast, the vehicle stops and shifts to **Park**.

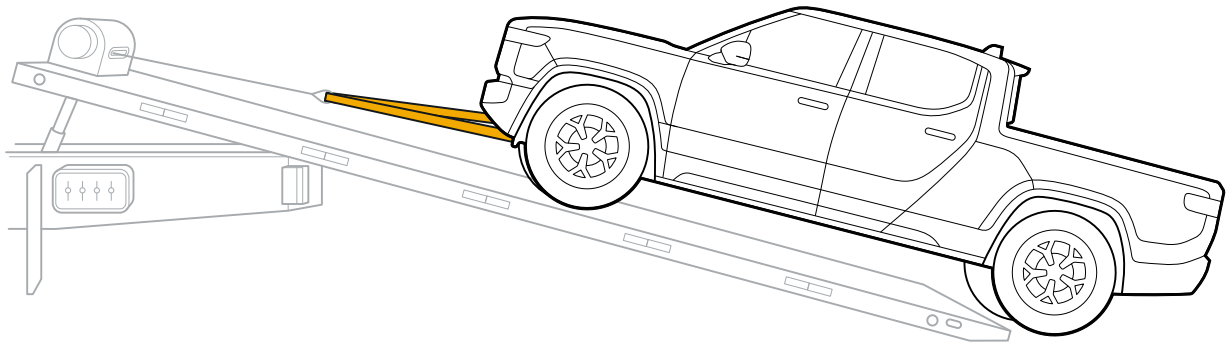

5. Tie down the vehicle using eight-point retention straps with two points of contact per corner.

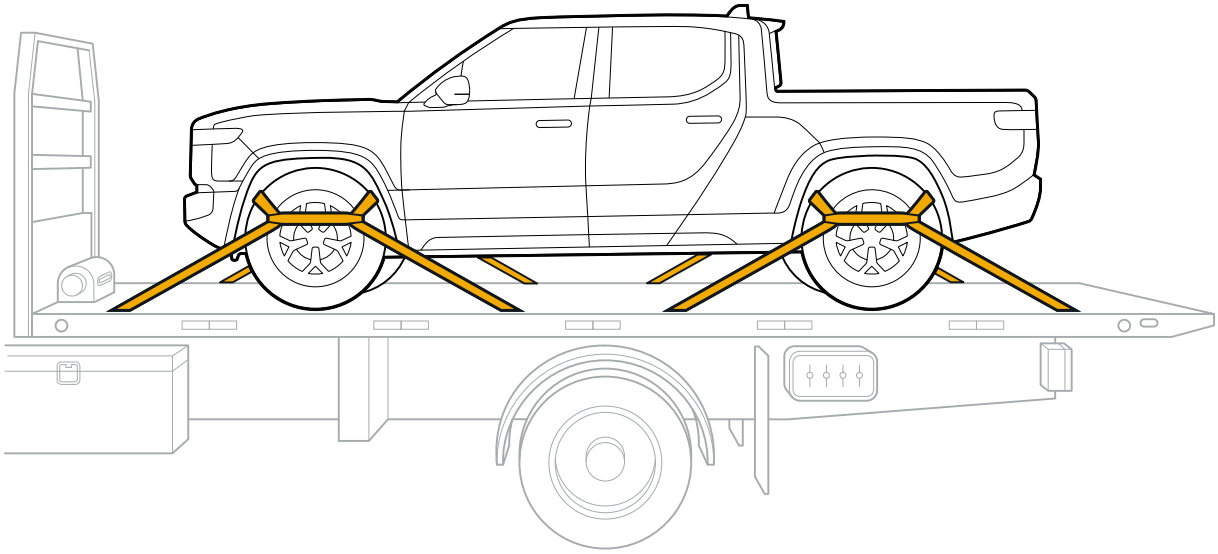

CAUTION

To prevent damage, ensure the straps don't contact the brake lines or suspension components behind the tire.

6. Put the vehicle into **Park**.
7. Go to **Drive Modes** in the center display. Choose **Conserve**. Then choose the **Lowest** ride height.
8. If you're transporting the vehicle over 50 mi (80 km), turn on Vehicle Shipping Mode to preserve battery charge.

Vehicle Shipping Mode

Use Vehicle Shipping mode to preserve battery charge while the vehicle is in transit. Vehicle Shipping mode turns off various features, including the following:

- Gear Guard alarm
- Gear Guard motion videos
- Passive lock/unlock

> **NOTE**
> When Vehicle Shipping mode is turned on, you can leave keys inside the vehicle and the vehicle sleeps normally.

To turn on Vehicle Shipping mode when you are ready to transport the vehicle:

1. Put the vehicle into **Park**.
2. Go to **Settings** ⚙. Choose **Vehicle**. Then choose **Service**.
3. Turn on **Vehicle Shipping** mode.

> **NOTE**
> Startup may take longer than normal when Vehicle Shipping mode is turned on.

To turn off Vehicle Shipping mode after you arrive at your destination:

1. Put the vehicle in **Park**.
2. Go to **Settings** ⚙ in the center display. Choose **Vehicle**. Then choose **Service**.
3. Turn off **Vehicle Shipping** mode.

EMERGENCY SOS

Use the **SOS** button on the overhead console in case of an emergency. Press the **SOS** button to reach a 24/7 national call center that assesses the situation, routes your call appropriately, and dispatches help if necessary. You can confirm or cancel the call on the center display. The call center operator calls for assistance from first responders when there is an event such as an accident. First responders include police, firefighters, and medical personnel.

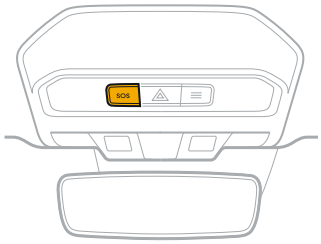

If the vehicle detects that a significant collision has occurred, it automatically initiates an SOS call.

The audio system suppresses background noise so you can focus on the call. Your current location displays on the center display while the call is in progress in case the call center operator can't locate your vehicle and you need to communicate this information.

For more information on what data may be collected from you and your vehicle during an SOS call, see Data and Privacy.

The SOS feature works as long as you're in a cellular coverage area, even if you don't have your phone with you.

If you need assistance but don't need help from first responders, such as if your vehicle breaks down or needs to be towed, contact Rivian .

NOTES

- If the emergency call center can't be reached, press the **SOS** button to try the call again.
- If you press the **SOS** button while on a phone call, this disconnects the phone call.
- If you accidentally push the **SOS** button, you can cancel the call on the center display within 20 seconds of initiating the call.
- If you don't cancel or confirm on the center display, an SOS call is automatically placed after 20 seconds. Notify the call center operator if it is an accidental call to avoid first responders being dispatched.
- The options to confirm or cancel the SOS call aren't visible on the center display if the vehicle is in Reverse since the backup camera takes over.
- The **SOS** button doesn't work if you drive outside the United States or Canada.

In the event of an emergency or malfunction, press the **Hazard Lights** button on the overhead console to turn on the hazard lights and alert surrounding vehicles.

Legal and Reference

LEGAL

Certification Conformity

Wireless Device	Model	FCC ID	IC ID
Telematics Control Module (Bluetooth not available)	TCM 1.0	2AW3A-1NAT20TCM	26958-1NAT20TCM
Vehicle Access System - Bluetooth	VAS-BLE 1.0	2AW3A-1NAG20VAS	26958-1NAG20VAS
Autonomy Experience Module	AXM 1.0	contains FCC ID: VPYLB2AJ	contains IC: 772C-LB2AJ
NFC Door Interior (NDI)	NDI 1.0	2AW3A-1NAG20NDI	26958-1NAG20NDI
NFC Door Handle (NDH)	NDH 1.0	2AW3A-1NAG20NDH	26958-1NAG20NDH
Wireless Charger	VWPEN16C-30ACAPB	2A2EZVW30ACAP	26414-VW30ACAP
Camp Speaker	RCS 0.9, 1.0	contains FCC ID: 2AOHH-TURBOXC404	contains IC: 23465-TURBOXC40X
R1T Keyfob	R1T KFB	2AW3A-1WWG20R1TKFB	26958-1WWG20R1TKF
Tire Pressure Monitoring System	TSSSG4G6b	YGOTSSRE4A	4008C-TSSRE4A
Automotive Short-Range Radars	MAR110	TQ8-MAR110	5074A-MAR110
Automotive Long-Range Radar	LRR-25	2ACDX-LRR-25	11988A-LRR25
Garage Door Opener	014D1501E	HBW97572	2666A-97572

FCC STATEMENT

This device complies with Part 15 of the FCC Rules. Operation is subject to the following two conditions:

1. This device may not cause harmful interference, and
2. This device must accept any interference received, including interference that may cause undesired operation.

This equipment has been tested and found to comply with the limits for a Class B digital device, pursuant to part 15 of the FCC Rules. These limits are designed to provide reasonable protection against harmful interference in a residential installation. This equipment generates, uses, and can radiate radio frequency energy. And, if not installed and used in accordance with the instructions, may cause harmful interference to radio communications. However, there is no guarantee that interference will not occur in a particular installation. If this equipment does cause harmful interference to radio or television reception, which can be determined by turning the equipment off and on, the user is encouraged to try to correct the interference by one or more of the following measures:

- Reorient or relocate the receiving antenna.
- Increase the separation between the equipment and receiver.
- Connect the equipment into an outlet on a circuit different from that to which the receiver is connected.
- Consult the dealer or an experienced radio/TV technician for help.

CAUTION

Changes or modifications not expressly approved by the manufacturer could void the user's authority to operate this equipment.

EXPOSURE TO RADIO FREQUENCY ENERGY

Rivian vehicles use Wi-Fi®, *Bluetooth*®, and cellular radio (LTE/WCDMA/GSM) transmitters that emit radio frequency (RF) energy. Though these devices emit low levels of RF energy, keep a minimum distance from these devices to the human body during operation to meet the guidelines for RF exposure from the Federal Communications Commission of the United States (FCC), Industry Canada, and European Union.

The devices emitting RF energy used in Rivian vehicles are listed below based on their recommended **Maximum Permissible Exposure (MPE)** distance.

Wireless Device	Model	MPE Distance	Antenna Location
Telematics Control Module	TCM 1.0	9 in (23 cm)	Rear Spoiler
Vehicle Access System - Bluetooth	VAS-BLE 1.0	8 in (20 cm)	Door Pillars
Autonomy Experience Module	AXM 1.0	8 in (20 cm)	Instrument Panel
R1 Wireless Charger Module	VWPEN16C-30ACAPB	8 in (20 cm)	Center Console
Camp Speaker	RCS 0.9, 1.0	8 in (20 cm)	Center Console*
Automotive Short-Range Radars	MAR110	8 in (20 cm)	Front and Rear Bumper Corners
Automotive Long-Range Radar	LRR-25	32 in (80 cm)	Front Bumper

* Camp Speaker is removable from the vehicle's Center Console. The MPE distance should be from the Camp Speaker antenna whether docked or undocked.

State-Specific Disclaimers

CALIFORNIA

Passenger and Off-Highway Motor Vehicles

WARNING

Operating, servicing and maintaining a passenger vehicle or off-highway motor vehicle can expose you to chemicals including phthalates and lead, which are known to the State of California to cause cancer and birth defects or other reproductive harm. To minimize exposure, service your vehicle in a well-ventilated area and wear gloves or wash your hands frequently when servicing your vehicle. For more information go to www.P65Warnings.ca.gov/passenge-vehicle.

WARNING

Certain components in your vehicle such as lithium batteries, airbag modules, and seat belt pretensioners may contain perchlorate material. Special handling may apply for service or vehicle end of life disposal. For more information go to www.dtsc.ca.gov/hazardouswaste/perchlorate.

Event Data Recorder

This vehicle is equipped with an event data recorder (EDR). The main purpose of an EDR is to record, in certain crash or near crash-like situations, such as an air bag deployment or hitting a road obstacle, data that will assist in understanding how a vehicle's systems performed. The EDR is designed to record data related to vehicle dynamics and safety systems for a short period of time, typically 30 seconds or less. The EDR in this vehicle is designed to record such data as:

- How various systems in your vehicle were operating;
- Whether or not the driver and passenger safety belts were buckled/fastened;
- How far (if at all) the driver was depressing the accelerator and/or brake pedal; and
- How fast the vehicle was traveling.

These data can help provide a better understanding of the circumstances in which crashes and injuries occur.

> **NOTE**
> EDR data are recorded by your vehicle only if a non-trivial crash situation occurs; no data are recorded by the EDR under normal driving conditions, and no personal data (e.g., name, gender, age, and crash location) are recorded. However, other parties, such as law enforcement, could combine the EDR data with the type of personally identifying data routinely acquired during a crash investigation.

To read data recorded by an EDR, special equipment is required, and access to the vehicle or the EDR is needed. In addition to the vehicle manufacturer, other parties, such as law enforcement, that have the special equipment, can read the information if they have access to the vehicle or the EDR.

Data and Privacy

Your privacy is important to Rivian. To learn more about the data we collect from you and your vehicle and our data handling practices, and to contact the Privacy Team, see Rivian's Data Privacy Notice.

Contact Rivian Customer Service with any questions on vehicle features or functionality.

Rivian vehicles are designed to provide a connected driving experience, and data is central to many features. Go to Settings › Data and Privacy on the vehicle's center display to adjust these settings (where available).

INTERNAL CAMERA

In vehicles running the latest software, the internal camera is deactivated, and no video is recorded from the camera. In vehicles running earlier software versions, internal camera video was processed in the vehicle to support driver monitoring safety features, and raw camera footage was never recorded, saved, or shared with Rivian or third parties.

LOCATION DATA SHARING

To enable certain features and services, your precise location data (within approximately a half-mile radius) is shared with Rivian and third-party partners.

WARNING

You have the ability to turn off precise location sharing, but doing so will limit or disable certain functionality. Such functionality includes, but is not limited to, the following:

- Navigation (real-time mapping, EV charger availability, and traffic data)
- Highway Assist (high-precision mapping and lane centering)
- Rivian Mobile App (displaying your vehicle's location in the app)
- Alexa (nearby search and weather services)
- Rivian Data Analytics (improvements to products and services)

Quality Control

All Rivian vehicles undergo extensive quality testing, road testing, and inspection before delivery. This may result in a few miles on the odometer when you accept delivery of your Rivian vehicle.

Customer Service

Still need help? Connect with us.

Customer Engagement Center

(888) RIVIAN1 / (888) 748-4261
customerservice@rivian.com
rivian.com/support Support Center and Chat

Roadside Assistance 24/7

(844) RIVIAN4 / (844) 748-4264

Insurance

(888) RIVIAN8 / (888) 748-4268

Service 24/7

(855) RIVIAN5 / (855) 748-4265

Visit the Gear Shop to purchase accessories that can be used with your vehicle.

Visit rivian.com to learn more about optional Adventure Gear products.