# Foreword

Welcome to the growing group of value-conscious people who drive Toyotas. We are proud of the advanced engineering and quality construction of each vehicle we build.

This Owner's Manual explains the features of your new Toyota. Please read it and follow the instructions carefully so that you can enjoy many years of safe motoring.

When it comes to service, remember that your Toyota dealer knows your vehicle best and is interested in your complete satisfaction. He will provide quality maintenance and any other assistance you may require.

Please leave this Owner's Manual in this vehicle at the time of resale. The next owner will need this information also.

All information and specifications in this manual are current at the time of printing. However, because of Toyota's policy of continual product improvement, we reserve the right to make changes at any time without notice.

Please note that this manual applies to all models and explains all equipment, including options. Therefore, you may find some explanations for equipment not installed on your vehicle.

**TOYOTA MOTOR CORPORATION**

© 1997 TOYOTA MOTOR CORPORATION

All rights reserved. This material may not be reproduced or copied, in whole or in part, without the written permission of Toyota Motor Corporation.

## New vehicle warranty

Your new vehicle is covered by the following Toyota limited warranties:

- New vehicle warranty
- Emission control systems warranty
- Others

For further information, please refer to the separate "Owner's Guide", "Owner's Manual Supplement" or "Warranty Booklet".

## Your responsibility for maintenance

It is owner's responsibility to make sure that the specified maintenance is performed. Part 6 gives details of these maintenance requirements. Also included in Part 6 is general maintenance. For scheduled maintenance information, please refer to the separate "Owner's Manual Supplement/Maintenance Schedule".

## Accessories, spare parts and modification of your Toyota

A wide variety of non-genuine spare parts and accessories for Toyota vehicles are currently available in the market. You should know that Toyota does not warrant these products and is not responsible either for their performance, repair or replacement, or for any damage they may cause to, or adverse effect they may have on, your Toyota vehicle.

This vehicle should not be modified with non-genuine Toyota products. Modification with non-genuine Toyota products could affect its performance, safety or durability, and may even violate governmental regulations. In addition, damage or performance problems resulting from the modification may not be covered under warranty.

## Spark ignition system of your Toyota

The spark ignition system in your Toyota meets all requirements of the Canadian Interference-Causing Equipment Standard.

## Installation of a mobile two-way radio system

As the installation of a mobile two-way radio system in your vehicle could affect electronic systems such as multiport fuel injection system/sequential multiport fuel injection system, cruise control system, anti-lock brake system and SRS airbag system, be sure to check with your Toyota dealer for precautionary measures or special instructions regarding installation.

## Scrapping of your Toyota

The SRS airbag devices in your Toyota contains explosive chemicals. If the vehicle is scrapped with the airbags left as they are, it may cause an accident such as a fire. Be sure to have the SRS airbag system removed and disposed of by a quilified service shop or by your Toyota dealer before you dispose of your vehicle.

## On-pavement and off-road driving tips

This vehicle will handle and maneuver differently from an ordinary passenger car because it is also desinged for off-road use. As with other vehicles of this type, failure to operate this vehicle correctly may result in loss of control or an accident. Be sure to read “Off-road vehicle precations” in Part 2 and “Off-road driving precautions” in Part 3.

Part

1 OPERATION OF INSTRUMENTS AND CONTROLS—

Chapter Page

1-1 Overview of instruments and controls . . . . . 1
1-2 Keys and Doors . . . . . 7
1-3 Seats, Seat belts, Steering wheel and Mirrors . . . . . 19
1-4 Lights, Wipers and Defogger . . . . . 57
1-5 Gauges, Meters and Service reminder indicators . . . . . 65
1-6 Ignition switch, Transmission and Parking brake . . . . . 73
1-7 Car audio system and Air conditioning system . . . . . 95
1-8 Other equipment . . . . . 133

2 INFORMATION BEFORE DRIVING YOUR TOYOTA . . . . . 139
3 STARTING AND DRIVING . . . . . 153
4 IN CASE OF AN EMERGENCY . . . . . 165
5 CORROSION PREVENTION AND APPEARANCE CARE . . . . . 183
6 VEHICLE MAINTENANCE AND CARE . . . . . 189

7 DO-IT-YOURSELF MAINTENANCE—

Chapter

7-1 Introduction . . . . . 195
7-2 Engine and Chassis . . . . . 203
7-3 Electrical components . . . . . 211

8 SPECIFICATIONS . . . . . 221
9 REPORTING SAFETY DEFECTS FOR U.S. OWNERS AND UNIFORM TIRE QUALITY GRADING . . . . . 229
10 INDEX . . . . . 231

# Important information about this manual

## Safety and vehicle damage warnings

In this manual, you will see CAUTION and NOTICE warnings. These are used in the following ways:

**⚠ CAUTION**

This is a warning against something which may cause injury to people if the warning is ignored. You are informed what you must or must not do in order to avoid or reduce the risk to yourself and other people.

**NOTICE**

This is a warning against something which may cause damage to the vehicle or its equipment if the warning is ignored. You are informed what you must or must not do in order to avoid or reduce the risk of damage to your vehicle and its equipment.

## Safety symbol

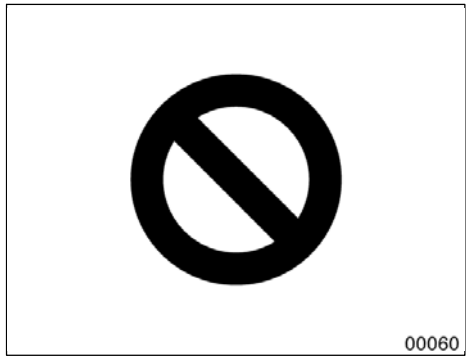


In this manual, you will also see a circle with a slash through it. This means ‘‘Do not’’, ‘‘Do not do this’’, or ‘‘Do not let this happen’’.

# Part 1
# OPERATION OF INSTRUMENTS AND CONTROLS—

## Chapter 1-1
## Overview of instruments and controls

- Instrument panel overview
- Instrument cluster overview
- Indicator symbols on the instrument panel

## Instrument panel overview

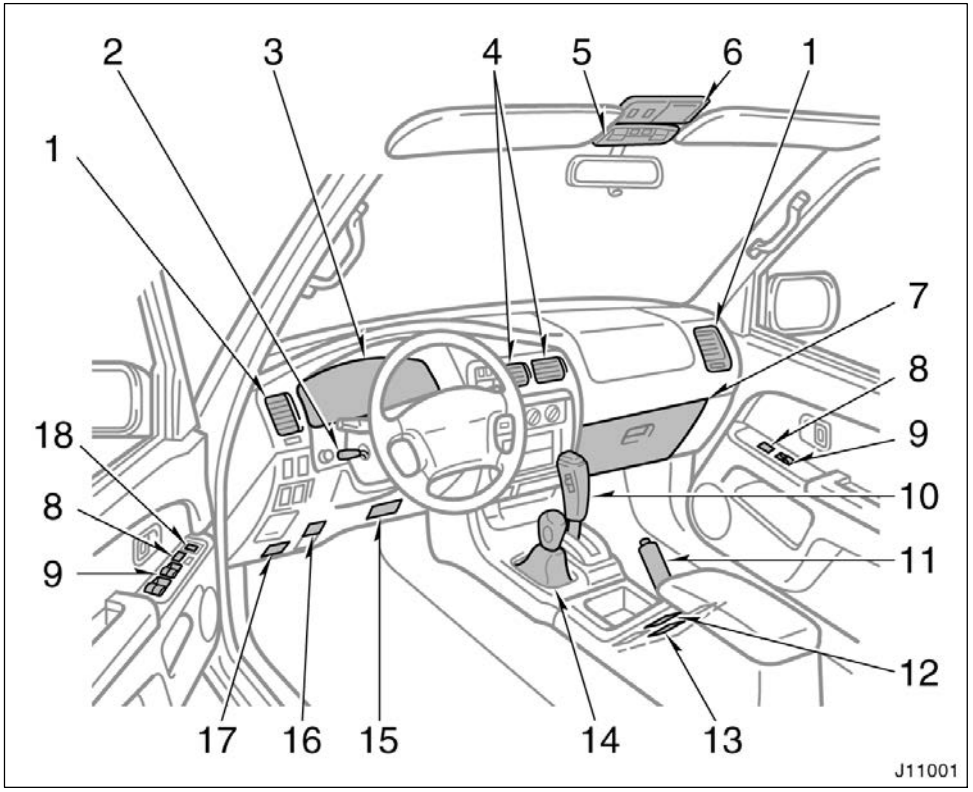


1. Side vent
2. Tilt steering lock release lever
3. Instrument cluster
4. Center vents
5. Personal lights
6. Electric moon roof switch
7. Glovebox
8. Power door lock switch
9. Power window switches
10. Automatic transmission selector lever or manual transmission gear shift lever
11. Parking brake lever
12. Driving pattern selector button
13. Power back window switch
14. Front drive control lever
15. Lower vent
16. Hood lock release lever
17. Fuel filler door opener
18. Power rear view mirror control switch (with power windows)

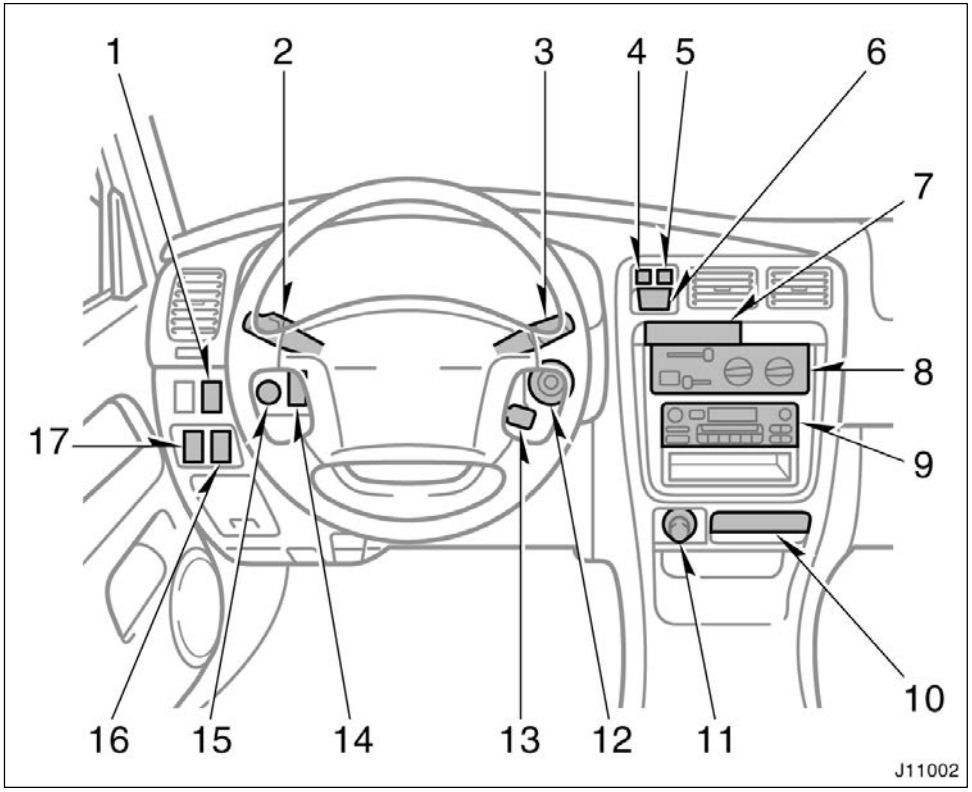


1. Clutch start cancel switch
2. Headlight and turn signal switch
3. Wiper and washer switches
4. Back window defogger switch
5. Emergency flasher switch
6. Clock
7. Cup holder
8. Air conditioning controls
9. Car audio
10. Ashtray
11. Cigarette lighter
12. Ignition switch
13. Cruise control switch
14. Rear differential lock switch
15. Instrument panel light control knob
16. Power rear view mirror control switch (without power windows)
17. Power back window lock switch (without power windows)

## Instrument cluster overview

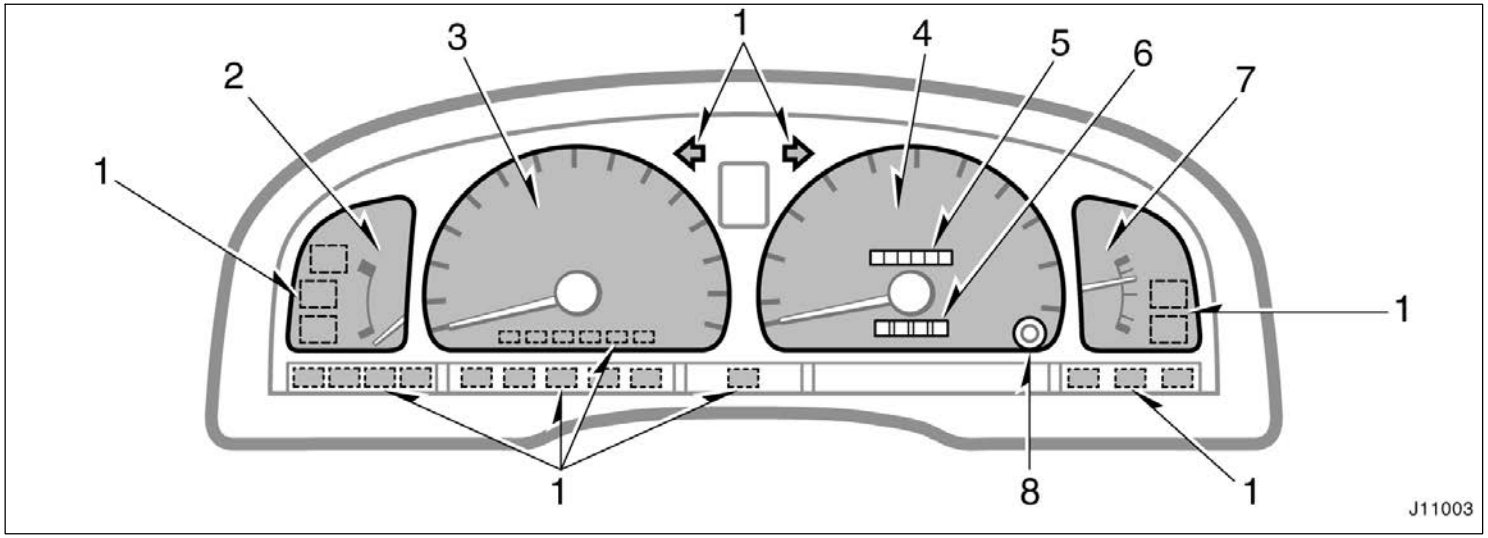


1. Service reminder indicators or indicator lights
2. Engine coolant temperature gauge
3. Tachometer
4. Speedometer
5. Odometer
6. Trip meter
7. Fuel gauge
8. Trip meter reset knob

## Indicator symbols on the instrument panel

| | |
|---|---|
| BRAKE | Brake system warning light*1 |
| | Seat belt reminder light*1 |
| | Discharge warning light*1 |
| | Low oil pressure warning light*1 |
| CHECK | Malfunction indicator lamp*1 |
| | Low fuel level warning light*1 |
| ABS (type A) ABS (type B) | Anti-lock brake system warning light*1 |

| | |
|---|---|
| | Open door warning light*1 |
| | SRS airbag warning light*1 |
| A/T P | Unengaged "Park" warning light*1 |
| A/T OIL TEMP | Automatic transmission fluid temperature warning light*1 |
| | Low windshield washer fluid level warning light*1 |
| | Turn signal indicator lights |
| | Headlight high beam indicator light |
| O/D OFF | Overdrive-off indicator light |

| | |
|---|---|
| **P R N<br>D 2 L** | Automatic transmission indicator light |
| **CRUISE** | Cruise control indicator light*2 |
| **ECT<br>PWR** | Driving pattern (”POWER” mode) indicator light |
| | Four-wheel drive indicator light |
| **RR DIFF<br>LOCK** | Rear differential lock indicator light |

*1: For details, see ”Service reminder indicators and warning buzzers” in Chapter 1-5.

*2: If this light flashes, see ”Cruise control” in Chapter 1-6.

# Part 1
# OPERATION OF INSTRUMENTS AND CONTROLS—

## Chapter 1-2
## Keys and Doors

- Keys
- Side doors
- Power windows
- Power back window
- Back door
- Hood
- Fuel tank cap
- Electric moon roof

### Keys

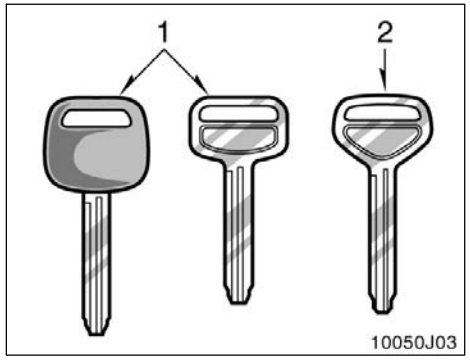


Your vehicle is supplied with two kinds of key.

1. Master key—This key works in every lock.
2. Subkey—This key will not work in the glovebox.

To protect things locked in the glovebox when you have your vehicle parked, leave the subkey with the attendant.

Since the doors can be locked without a key, you should always carry a spare master key in case you accidentally lock your keys inside the vehicle.

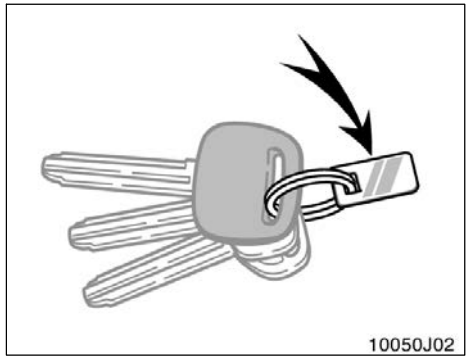


KEY NUMBER PLATE

Your key number is shown on the plate. Keep the plate in a safe place such as your wallet, not in the vehicle.

If you should lose your keys or if you need additional keys, duplicates can be made by a Toyota dealer using the key number.

You should also put a copy of the key number with your important papers.

## Side doors

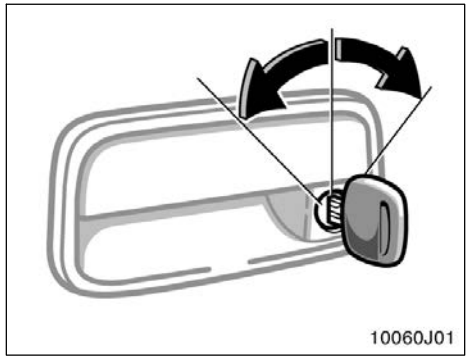


LOCKING AND UNLOCKING WITH KEY

Insert the key into the keyhole and turn it.

To lock: Turn the key forward.
To unlock: Turn the key backward.

Vehicles with power door lock system—All the side doors and back door lock and unlock simultaneously with either front door. In the driver's door lock, turning the key once will unlock the driver's door and twice in succession will unlock all the side doors simultaneously.

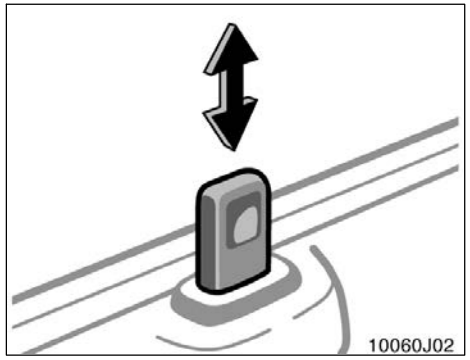


LOCKING AND UNLOCKING WITH INSIDE LOCK BUTTON

Move the lock button.

To lock: Push the button downward.
To unlock: Pull the button upward.

Closing the door with the lock button pushed in will also lock the door. Be careful not to lock your keys in the vehicle.

Vehicles with power door lock system—The front doors cannot be locked if you leave the key in the ignition switch.

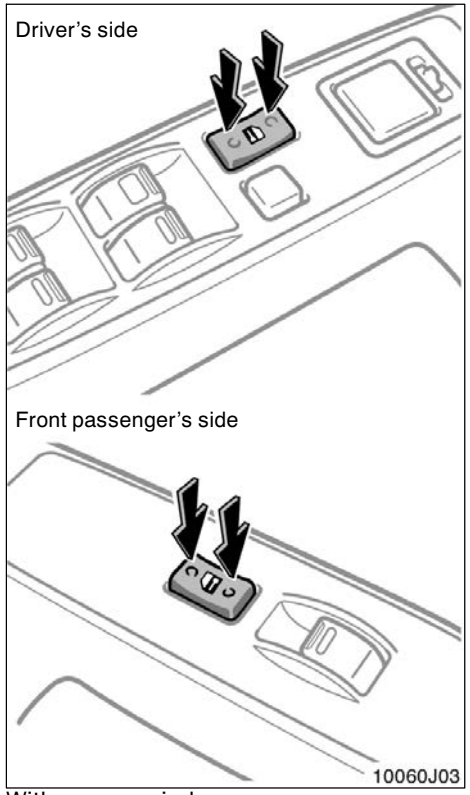


With power window

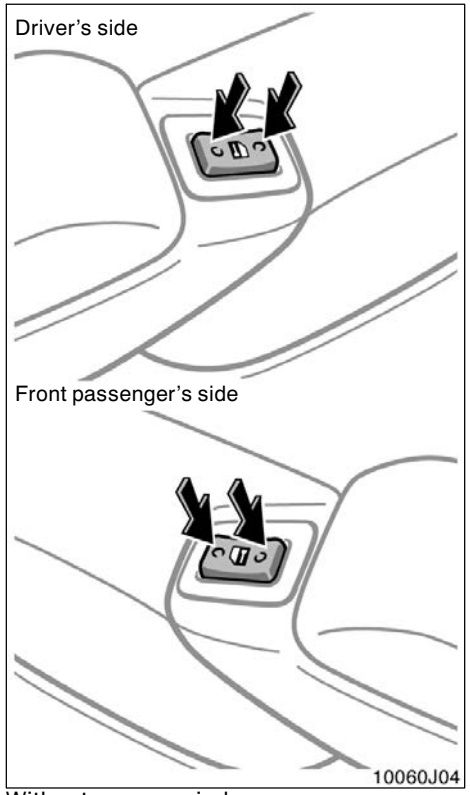

Without power window

LOCKING AND UNLOCKING WITH POWER DOOR LOCK SWITCH

Push the switch.

To lock: Push the switch on the front side.

To unlock: Push the switch on the rear side.

All the doors lock or unlock simultaneously.

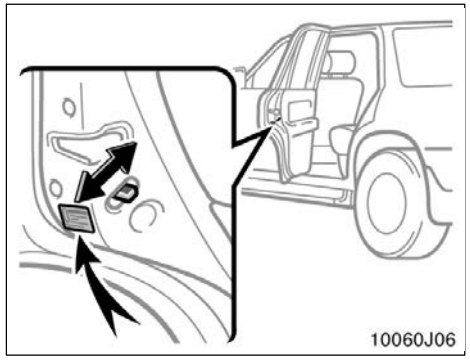


REAR DOOR CHILD-PROTECTORS

Move the lock lever to the "LOCK" position as shown on the label.

This feature allows you to lock a rear door so it can be opened from the outside only, not from inside. We recommend using this feature whenever small children are in the vehicle.

## Power windows

**⚠ CAUTION**

Before driving, be sure that the doors are closed and locked, especially when small children are in the vehicle. Along with the proper use of seat belts, locking the doors helps prevent the driver and passengers from being thrown out from the vehicle during an accident. It also helps prevent the doors from being opened unintentionally.

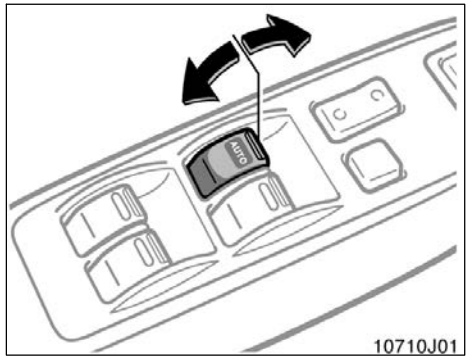


The windows can be operated with the switch on each side door.

The power windows work when the ignition switch is in the "ON" position. However, if both front side doors are closed, they work for 43 seconds even after the ignition switch is turned off. They stop working when either front side door is opened.

OPERATING THE DRIVER'S WINDOW

Use the switch on the driver's door.

Normal operation: The window moves as long as you hold the switch.

To open: Lightly push down the switch.

To close: Pull up the switch.

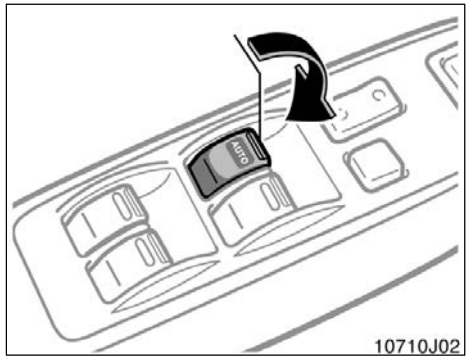


Automatic operation (to open only): Push the switch completely down and then release it. The window will fully open. To stop the window partway, lightly pull the switch up and then release it.

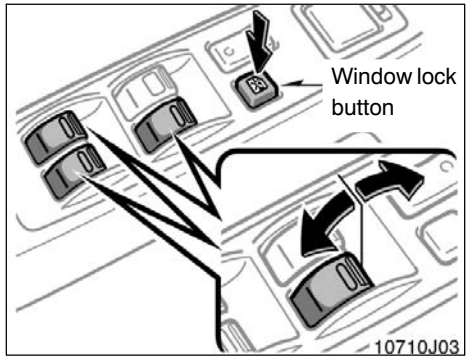


OPERATING THE PASSENGERS' WINDOW

Use the switch on the passenger's door. The driver's door also has a switch that controls the passengers' window.

The window moves as long as you hold the switch.

To open: Push down the switch.

To close: Pull up the switch.

If you push in the window lock button on the driver's door, the passengers' window cannot be operated.

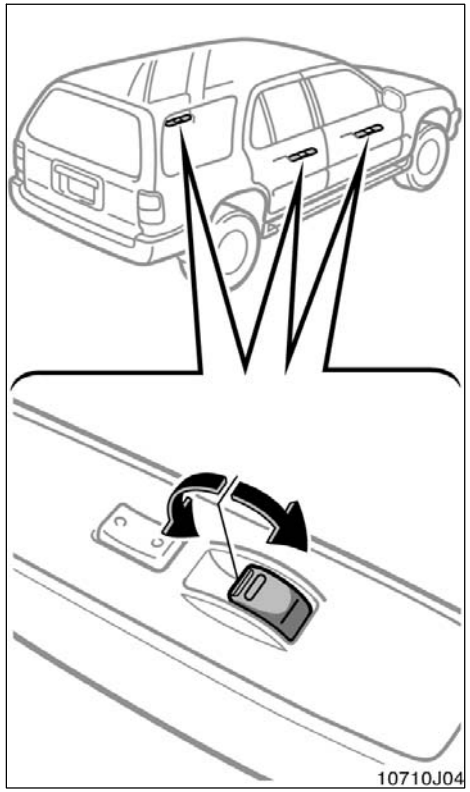


**⚠ CAUTION**

To avoid serious personal injury, you must do the following.

- Always make sure the head, hands and other parts of the body of all occupants are kept completely inside the vehicle before you close the power windows. If someone's neck, head or hands gets caught in a closing window, it could result in a serious injury. When anyone closes the power windows, be sure that they operate the windows safely.
- When small children are in the vehicle, never let them use the power window switches without supervision. Use the window lock button to prevent them from making unexpected use of the switches.
- Never leave small children alone in the vehicle, especially with the ignition key still inserted. They could use the power window switches and get trapped in a window. Unattended children can become involved in serious accidents.

## Power back window

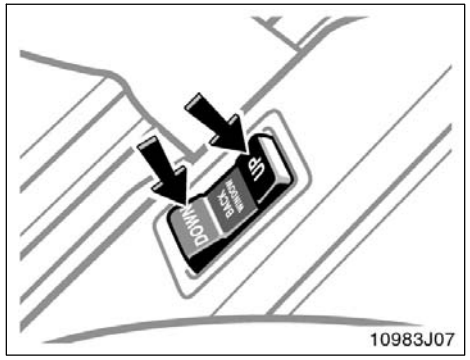


The back window can be operated with the inner switch on the center console or outer switch on the back door.

OPERATING FROM INSIDE

The ignition key must be in the ”ON” position.

The back window moves as long as you hold the inner switch.

To open: Push the switch on the ”DOWN” side.
To close: Push the switch on the ”UP” side.

You can also open the back window when the back window wiper is working. At that time, the wiper stops working until the window is closed again.

If you push in the window lock button on the driver’s door (with power window) or on the instrument panel (without power window), the back window cannot be operated.

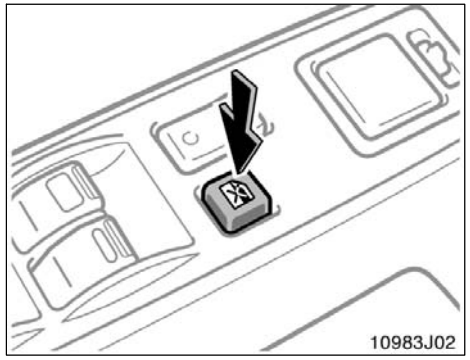


With power window (driver’s door)

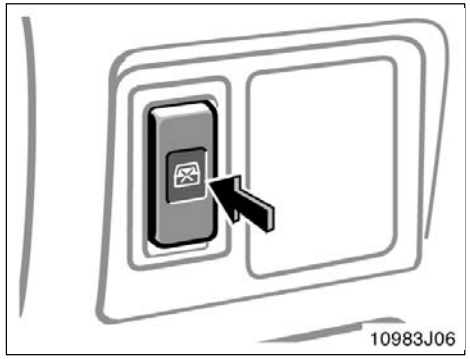


Without power window (instrument panel)

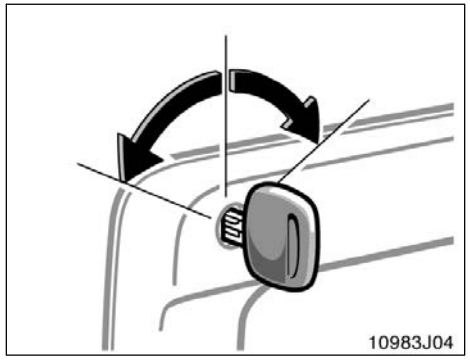


OPERATING FROM OUTSIDE

After turning and holding the key for a few seconds. the back window will move as far as holding the key.

To open: Turn the key counterclockwise.
To close: Turn the key clockwise.

You can also open the back window when the back window wiper is working. At the time, the wiper stops working until the window is closed again.

**⚠ CAUTION**

To avoid serious personal injury, you must do the following.

- Always make sure the head, hands and other parts of the body of all occupants are kept completely inside the vehicle before you close the power back window. If someone's neck, head or hands gets caught in a closing window, it could result in a serious injury. When anyone closes the power back window, be sure that they operate the window safely.
- When small children are in the vehicle, never let them use the power back window switch without supervision. Use the window lock button to prevent them from making unexpected use of the switch.
- Never leave small children alone in the vehicle, especially with the ignition key still inserted. They could use the power back window switch and get trapped in a window. Unattended children can become involved in serious accidents.
- Keep the back window closed while driving. This not only keeps the luggage from being thrown out but also prevents exhaust gases from entering the vehicle.

## Back door

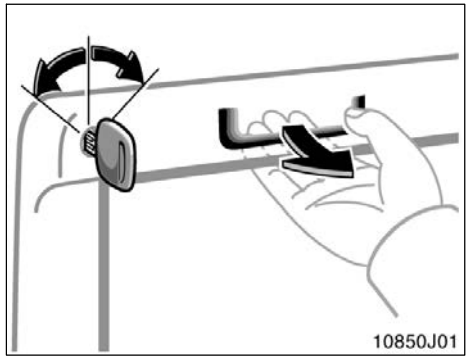


LOCKING AND UNLOCKING WITH KEY

Insert the key into the keyhole and turn it.

To lock: Turn the key clockwise.
To unlock: Turn the key counterclockwise.

The back door will be controlled by operating the power door lock switch.

When closing the back door, make sure it is fully closed.

See "Luggage stowage precautions" in Part□2 for precautions to observe in loading luggage.

**⚠ CAUTION**

Keep the back window and back door closed while driving. This not only keeps the luggage from being thrown out but also prevents exhaust gases from entering the vehicle.

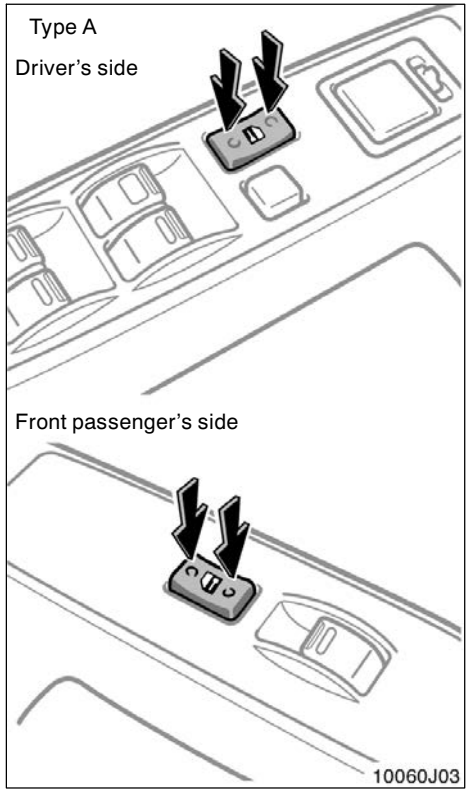


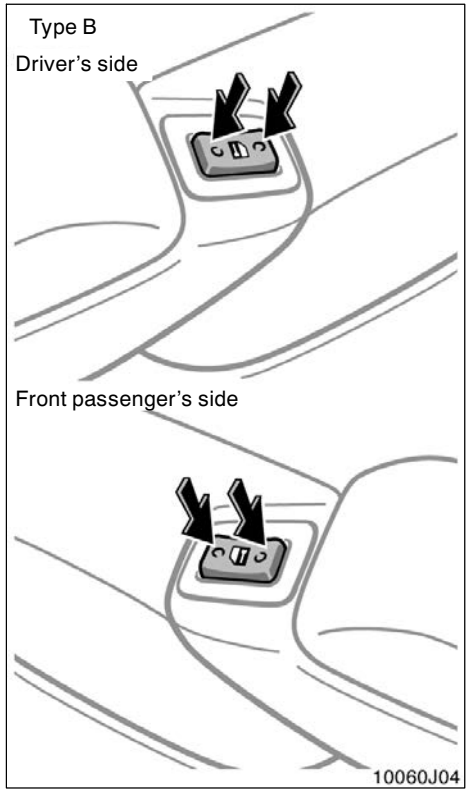

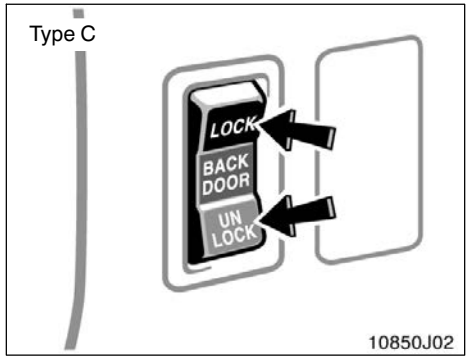


LOCKING AND UNLOCKING WITH POWER BACK DOOR LOCK SWITCH

Push the switch.

To lock: Push the switch on the ”LOCK” side.
To unlock: Push the switch on the ”UNLOCK” side.

Vehicles with a power door lock system—Operating the power door lock switch simultaneously locks or unlocks the back door (see ”Side doors”).

## Hood

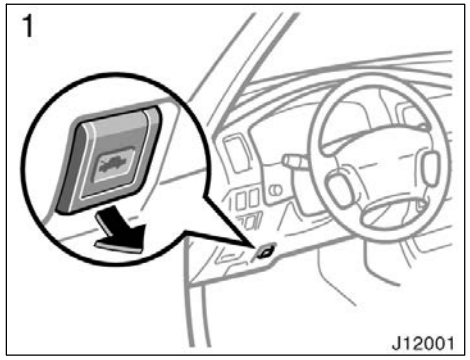


To open the hood, do the following.

1. Pull the hood lock release lever. The hood will spring up slightly.

**⚠ CAUTION**

Before driving, be sure that the hood is securely locked. Otherwise, the hood may open unexpectedly while driving and an accident may occur.

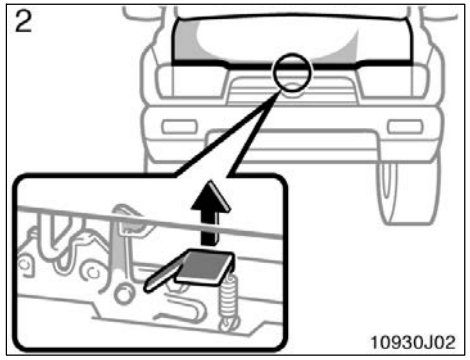


2. In front of the vehicle, pull up on the□auxilialy catch lever and lift the hood.

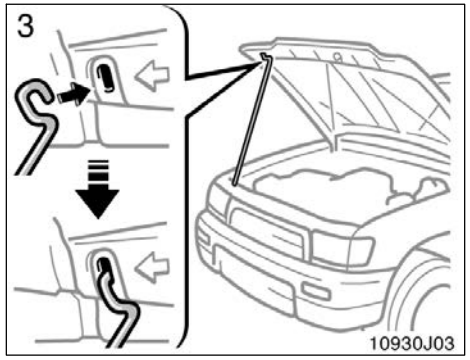


3. Hold the hood open by inserting the support rod into the slot.

Before closing the hood, check to see that you have not forgotten any tools, rags, etc. and return the support rod to its clip–this prevents rattles. Then lower the hood make sure it locks into place. If necessary, press down gently on the front edge to lock it.

**⚠ CAUTION**

After inserting the support rod into the slot, make sure the rod supports the hood security from falling down on to your head or body.

## Fuel tank cap

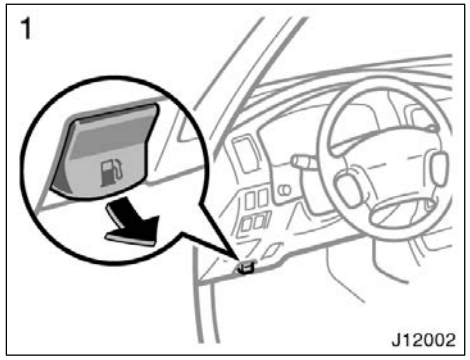


1. To open the fuel filler door, pull the lever.

   When refueling, turn off the engine.

**⚠ CAUTION**

- Do not smoke, cause sparks or allow open flames when refueling. The fumes are flammable.
- When opening the cap, do not remove the cap quickly. In hot weather, fuel under pressure could cause injury by spraying out of the filler neck if the cap is suddenly removed.

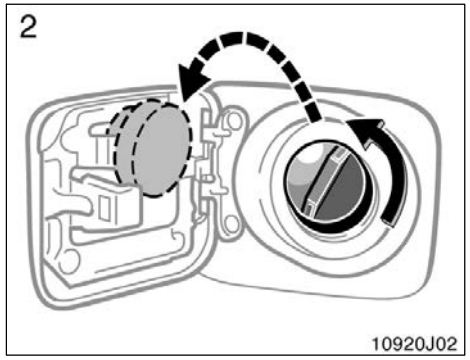


2. To remove the fuel tank cap, turn the cap slowly counterclockwise, then pause slightly before removing it. After removing the cap, hang it on the cap hanger.

It is not unusual to hear a slight swoosh when the cap is opened. When installing, turn the cap clockwise till you hear a click.

If the cap is not tightened securely, the malfunction indicator lamp comes on. Make sure the cap is tightened securely.

0The indicator lamp goes off after driving several times. If the indicator lamp does not go off, contact your Toyota dealer as soon as possible.

⚠ CAUTION

- Make sure the cap is tightened securely to prevent fuel spillage in case of an accident.
- Use only a genuine Toyota fuel tank cap for replacement. It has a built-in check valve to reduce fuel tank vacuum.

## Electric moon roof

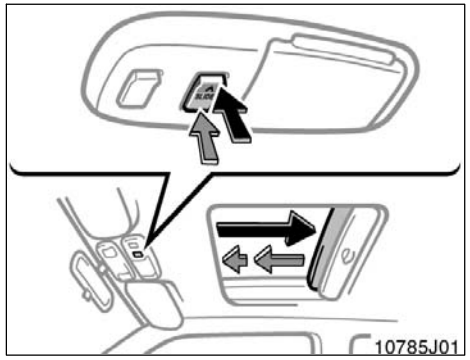


Sliding operation

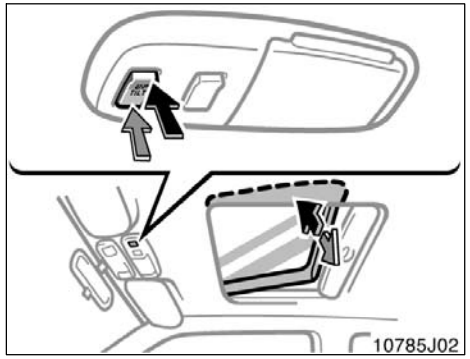


Tilting operation

To operate the moon roof, use the switches beside the interior light.

The moon roof works when the ignition switch is in the ”ON” position. However, if all the doors are closed, it works for 60 seconds even after the ignition switch is turned off. It stops working when any of the doors is opened.

Sun shade operation—

The sun shade can be opened or closed by hand.

Sliding operation—

To open: Push the switch on the ”SLIDE” side.

The sun shade will be opened together with the roof.

To close: Push the switch on the opposite side of the ”SLIDE” side.

As a precaution when closing, the roof stops at the three-quarters closed position before fully closing. Therefore, release the switch and then push it again to close it completely.

Tilting operation—

To tilt up: Push the switch on the ”UP” side.

To lower: Push the switch on the opposite side of the ”UP” side.

You may stop the moon roof at any desired position. The roof will move while the switch is being pushed and stop when released.

**⚠ CAUTION**

To avoid serious personal injury, you must do the following.

- While the vehicle is moving, always keep the head, hands and other parts of the body of all occupants away from the roof opening. Otherwise, you could be seriously injured if the vehicle stops suddenly or if the vehicle is involved in an accident.
- Always make sure nobody places his/her head, hands and other parts of the body in the roof opening before you close the roof. If someone's neck, head or hands gets caught in the closing roof, it could result in a serious injury. When anyone closes the roof, first make sure it is safe to do so.
- Never leave small children alone in the vehicle, especially with the ignition key still inserted. They could use the moon roof switches and get trapped in the roof opening. Unattended children can become involved in serious accidents.
- Never sit on top of the vehicle around the roof opening.

# Part 1
# OPERATION OF INSTRUMENTS AND CONTROLS—

## Chapter 1-3
## Seats, Seat belts, Steering wheel and Mirrors

- Seat
- Front seats
- Fold-down rear seats
- Head restraints
- Seat belts
- SRS driver and front passenger airbags
- Child restraint
- Tilt steering wheel
- Outside rear view mirrors
- Anti-glare inside rear view mirror
- Sun visors

### Seats

While the vehicle is being driven, all vehicle occupants should have the seatback upright, sit well back in the seat and properly wear the seat belts provided.

**⚠ CAUTION**

- Do not drive the vehicle unless the occupants are not properly seated. Do not allow sitting on top of a folded-down seatback, or in the luggage compartment. Persons not properly seated and not properly restrained by seat belts can be severely injured in the event of emergency braking or a collision.
- During driving, do not allow passengers to stand up or move around between seats. Severe injuries can occur in the event of emergency braking or a collision.

## Front seats—
## —Seat adjustment precautions

Adjust the driver's seat so that the foot pedals, steering wheel and instrument panel controls are within easy reach of the driver.

**⚠ CAUTION**

- Adjustments should not be made while the vehicle is moving, as the seat may unexpectedly move and cause the driver to lose control of the vehicle.
- When adjusting the seat, be careful not to hit the seat against a passenger or luggage.
- After adjusting the seat position, try sliding it forward and backward to make sure it is locked in position.
- After adjusting the seatback, exert body pressure to make sure it is locked in position.
- Do not put objects under the seats as they may interfere with the seat-lock mechanism or unexpectedly push up the seat position adjusting lever; the seat may suddenly move, causing the driver to lose control of the vehicle.

- While adjusting the seat, do not put your hands under the seat or near the moving parts. You may catch and injure your hands or fingers.

## —Adjusting front seats

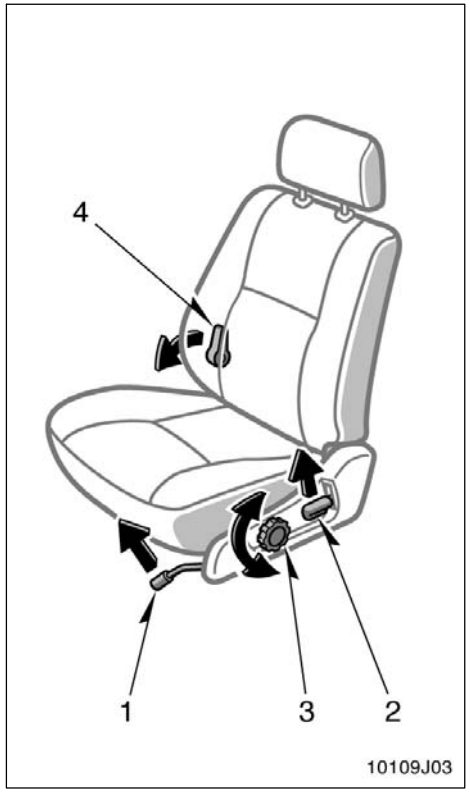

1. SEAT POSITION ADJUSTING LEVER

Pull the lever up. Then slide the seat to the desired position with slight body pressure and release the lever.

2. SEATBACK ANGLE ADJUSTING LEVER

Lean forward and pull the lever up. Then lean back to the desired angle and release the lever.

> ⚠ CAUTION
>
> To reduce the risk of sliding under the lap belt during a collision, avoid reclining the seatback any more than needed. The seat belts provide maximum protection in a frontal or rear collision when the driver and the passenger are sitting up straight and well back in the seats. If you are reclined, the lap belt may slide past your hips and apply restraint forces directly to the abdomen. Therefore, in the event of a frontal collision, the risk of personal injury may increase with increasing recline of the seatback.

3. SEAT CUSHION ANGLE ADJUSTING KNOB

Turn the knob either way.

4. SEAT LUMBAR SUPPORT ADJUSTING LEVER

Pull the lever forward or backward.

## —Adjusting front seats (power seat)

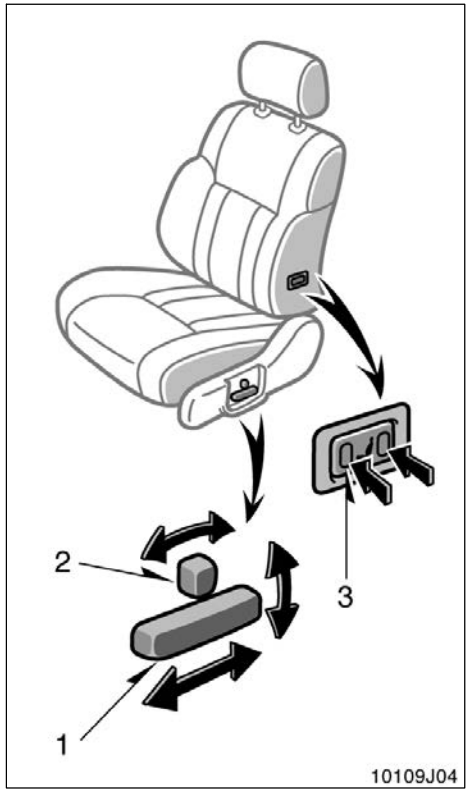

1. SEAT POSITION AND SEAT CUSHION ANGLE ADJUSTING SWITCH

Move the control switch in the desired direction.

Releasing the switch will stop the seat at that position.

Do not place anything under the front seats. It might interfere with the seat-lock mechanism.

2. SEATBACK ANGLE ADJUSTING SWITCH

Move the control switch in the desired direction.

Releasing the switch will stop the seat-back at that position.

**⚠ CAUTION**

To reduce the risk of sliding under the lap belt during a collision, avoid reclining the seatback any more than needed. The seat belts provide maximum protection when the driver and the passenger are sitting up straight and well back in the seats. If you are reclined, the lap belt may slide past your hips and apply restraint forces directly to the abdomen. Therefore, in the event of a formal collision, the risk of personal injury may increase with increasing recline of the seat-back.

3. SEAT LUMBAR SUPPORT ADJUSTING SWITCH

Push the control switch in the desired direction.

Releasing the switch will stop the seat-back at that position.

## Fold-down rear seats

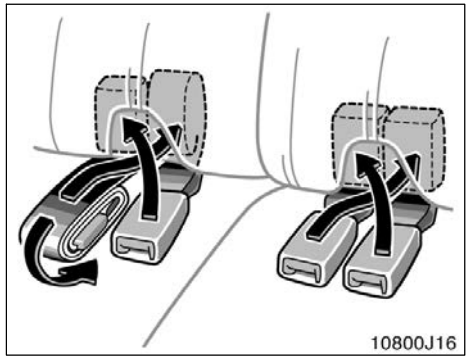


BEFORE FOLD-DOWN REAR SEAT

Stow the rear seat belts as shown in the illustration.

This prevents the belts from falling out when you fold the seatback.

**NOTICE**

The seat belts must be stowed before you fold the seatback.

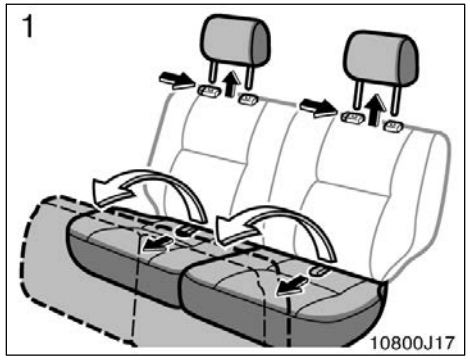


1. Remove the head restraint, and swing the bottom cushion up by pulling the lock release strap. Be certain to replace the head restraint.

It is hinged at the front edge, so just lift it up.

**⚠ CAUTION**

When returning the bottom cushion to its place:

- Do not forget to pull out the buckle of the side seatbelts and center seatbelt and arranged them in their proper position for ready use.
- Make sure the bottom cushion is securely locked by trying to pull up the edge of the cushion near the lock release straps.

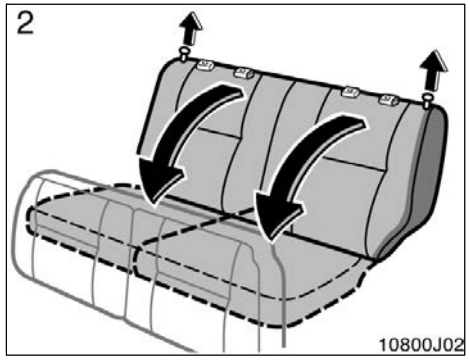


2. Unlock the seatback and fold it down.

This will enlarge the luggage compartment as far as the raised seat cushion. See ”Luggage stowage precautions” in Part 2 for precautions to observe in loading luggage.

If desired, each seatback may be folded separately.

## Head restraints

**⚠ CAUTION**

When returning the seatback to the upright position:

- Make sure the seat belts are not twisted or caught in the seatback and are arranged in their proper position for ready use.
- Make sure the seatback is securely locked by pushing forward and rearward on the top of the seatback. Be certain to replace the head restraints.

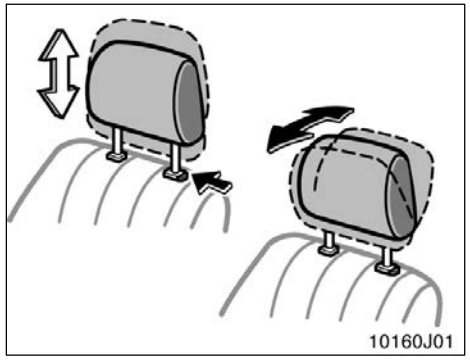


Front

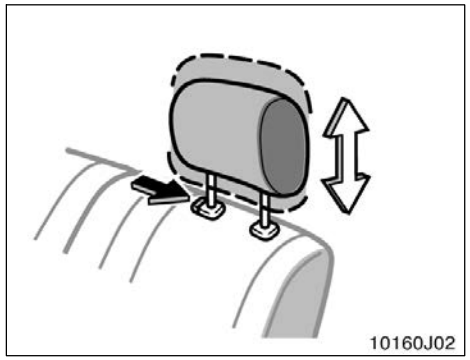


Rear

For your safety, adjust the head restraint before driving.

To raise: Pull it up.
To lower: Push it down while pressing the lock release button.

On some models, you can also move the head restraint forward or backward. If such adjustment is desired, pull or push the head restraint.

The head restraint is most effective when it is close to your head. Therefore, using a cushion on the seatback is not recommended.

**⚠ CAUTION**

- Adjust the top of the head restraint so that it is closet to the top of your ears.
- After adjusting the head restraint, make sure it is locked in position.
- Do not drive with the head restraints removed.

## Seat belts—
## —Seat belt precautions

Toyota strongly urges that the driver and passengers in the vehicle be properly restrained at all times with the seat belts provided. Failure to do so could increase the chance of injury and/or the severity of injury in accidents.

Child. Use a child restraint system appropriate for the child until the child becomes large enough to properly wear the vehicle's seat belts. See "Child restraint" for details.

If a child is too large for a child restraint system, the child should sit in the rear seat and must be restrained using the vehicle's seat belt. According to accident statistics, the child is safer when properly restrained in the rear seat than in the front seat.

If a child must sit in the front seat, the seat belts should be worn properly. If an accident occurs and the seat belts are not worn properly, the force of the rapid inflation of the airbag may cause death or serious injury to the child.

Do not allow the child to stand up or kneel on either rear or front seats. An unrestrained child could suffer serious injury or death during emergency braking or a collision. Also do not let the child sit on your lap. It does not provide sufficient restraint.

Pregnant woman. Toyota recommends the use of a seat belt. Ask your doctor for specific recommendations. The lap belt should be worn securely and as low as possible over the hips and not on the waist.

Injured person. Toyota recommends the use of a seat belt. Depending on the injury, first check with your doctor for specific recommendation.

**⚠ CAUTION**

Persons should ride in their seats properly wearing their seat belts whenever the vehicle is moving. Otherwise, they are much more likely to suffer serious bodily injury or death in the event of sudden braking or a collision.

When using the seat belts, observe the following:

- Use the belt for only one person at a time. Do not use a single belt for two or more people—even children.

- Avoid reclining the seatbacks too much. The seat belts provide maximum protection when the seatbacks are in the upright position. (Refer to the seat adjustment instructions.)
- Be careful not to damage the belt webbing or hardware. Take care that they do not get caught or pinched in the seat or side doors.
- Inspect the belt system periodically. Check for cuts, fraying, and loose parts. Damaged parts should be replaced. Do not disassemble or modify the system.
- Keep the belts clean and dry. If they need cleaning, use a mild soap solution or lukewarm water. Never use bleach, dye, or abrasive cleaners—they may severely weaken the belts.
- Replace the belt assembly (including bolts) if it has been used in a severe impact. The entire assembly should be replaced even if damage is not obvious.

## —Front and rear outside seat belts

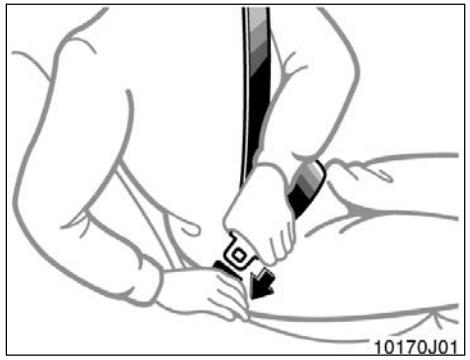


Adjust the seat as needed (front seats only) and sit up straight and well back in the seat. To fasten your belt, pull it out of the retractor and insert the tab into the buckle.

You will hear a click when the tab locks into the buckle.

The seat belt length automatically adjusts to your size and the seat position.

The retractor will lock the belt during a sudden stop or on impact. It also may lock if you lean forward too quickly. A slow, easy motion will allow the belt to extend, and you can move around freely.

If the seat belt cannot be pulled out of the retractor, firmly pull the belt and release it. You will then be able to smoothly pull the belt out of the retractor.

When a passenger's shoulder belt is completely extended and is then retracted even slightly, the belt is locked in that position and cannot be extended. This feature is used to hold the child restraint system securely. (For details, see "Child restraint" in this chapter.) To free the belt again, fully retract the belt and then pull the belt out once more.

**⚠ CAUTION**

- After inserting the tab, make sure the tab and buckle are locked and that the belt is not twisted.
- Do not insert coins, clips, etc. in the buckle as this may prevent you from properly latching the tab and buckle.
- If the seat belt does not function normally, immediately contact your Toyota dealer. Do not use the seat until the seat belt is fixed. It cannot protect an adult occupant or your child from injury.

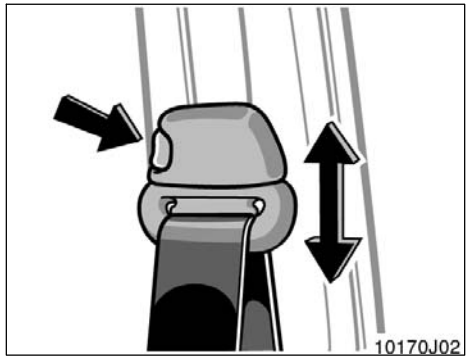


Seat belts with an adjustable shoulder anchor—

Adjust the shoulder anchor position to your size.

To raise: Slide the anchor up.
To lower: Push in the lock release button and slide the anchor down.

After adjustment make sure the anchor is locked in position.

**⚠ CAUTION**

Always make sure the shoulder belt is positioned across the center of your shoulder. The belt should be kept away from your neck, but not falling off your shoulder. Failure to do so could reduce the amount of protection in an accident and cause serious injuries in a collision.

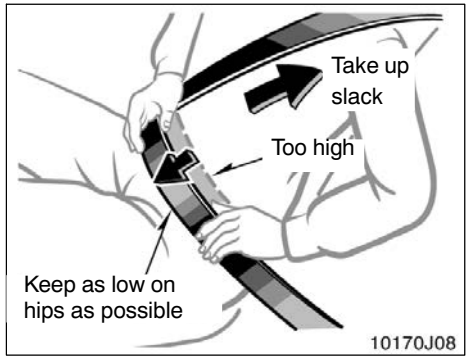


Adjust the position of the lap and shoulder belts.

Position the lap belt as low as possible on your hips—not on your waist, then adjust it to a snug fit by pulling the shoulder portion upward through the latch plate.

**⚠ CAUTION**

- High-positioned lap belts and loose-fitting belts both could cause serious injuries due to sliding under the lap belt during a collision or other unintended result. Keep the lap belt positioned as low on hips as possible.
- For your safety, do not place the shoulder belt under your arm.

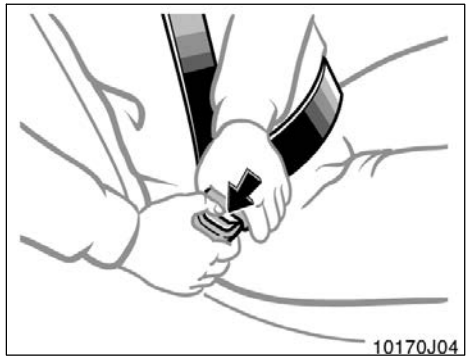


To release the belt, press the buckle-release button and allow the belt to retract.

If the belt does not retract smoothly, pull it out and check for kinks or twists. Then make sure it remains untwisted as it retracts.

—Rear center seat belt

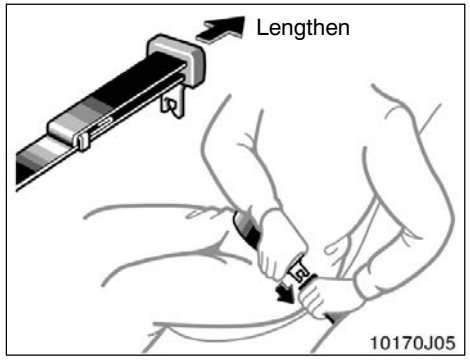


Sit up straight and well back in the seat. To fasten your belt, insert the tab into the buckle.

You will hear a click when the tab locks into the buckle.

If the belt is not long enough for you, hold the tab at a right angle to the belt and pull on the tab.

**⚠ CAUTION**

- After inserting the tab, make sure the tab and buckle are locked and that the belt is not twisted.
- Do not insert coins, clips, etc. in the buckle as this may prevent you from properly latching the tab and buckle.
- If the seat belt does not function normally, immediately contact your Toyota dealer. Do not use the seat until the seat belt is fixed. It cannot protect an adult occupant or your child from injury.

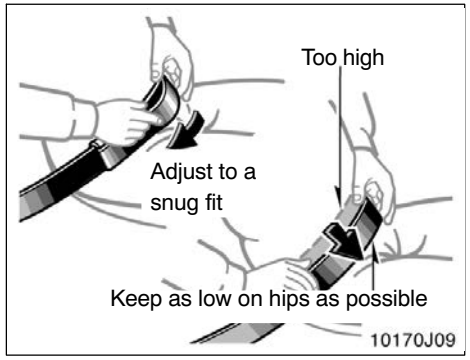


Remove excess length of the belt and adjust the belt position.

To shorten the belt, pull the free end of the belt.

Position the lap belt as low as possible on your hips—not on your waist, then adjust it to a snug fit.

**⚠ CAUTION**

High-positioned and loose-fitting lap belts could cause serious injuries due to sliding under the lap belt during a collision or other unintended result. Keep the lap belt positioned as low on hips as possible.

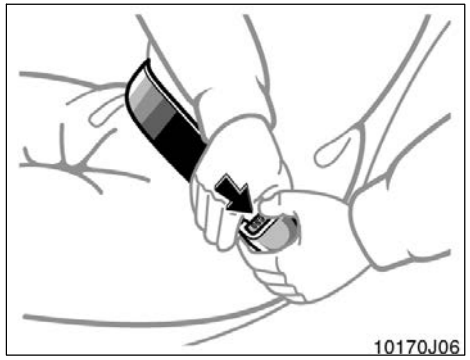


To release the belt, press the buckle-release button.

## —Stowing rear seat belts

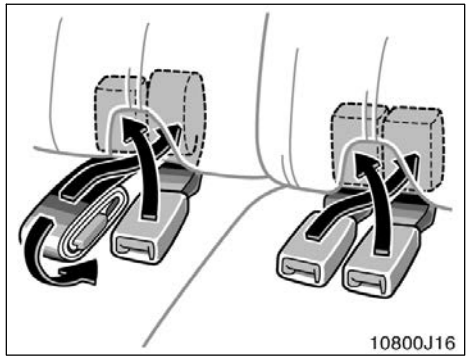


The rear seat belts can be stowed when not in use.

Seat belts must be stowed before you fold the seat back. (See "Rear seats—Fold down rear seat" in this chapter.)

## —Seat belt extender

If your seat belt cannot be fastened securely because it is not long enough, a personalized seat belt extender is available from your Toyota dealer free of charge.

Please contact your local Toyota dealer so that the dealer can order the proper required length for the extender. Bring the heaviest coat you expect to wear for proper measurement and selection of length. Additional ordering information is available at your Toyota dealer.

**⚠ CAUTION**

When using the seat belt extender, observe the following. Failure to follow these instructions could result in less effectiveness of the seat belt restraint system in case of vehicle accident, increasing the chance of personal injury.

- Never use the seat belt extender if you can fasten the seat belt without it.
- Remember that the extender provided for you may not be safe when used on a different vehicle, or for another person or at a different seating position than the one originally intended for.

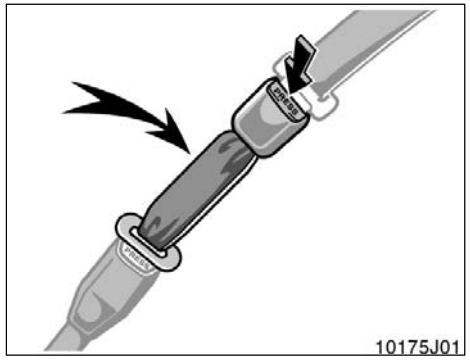


To connect the extender to the seat belt, insert the tab into the seat belt buckle so that the "PRESS" signs on the buckle-release buttons of the extender and the seat belt are both facing outward as shown.

You will hear a click when the tab locks into the buckle.

When releasing the seat belt, press on the buckle-release button on the extender, not on the seat belt. This helps prevent damage to the vehicle interior and extender itself.

When not in use, remove the extender and store in the vehicle for future use.

**⚠ CAUTION**

- After inserting the tab, make sure the tab and buckle are locked and that the seat belt extender is not twisted.
- Do not insert coins, clips, etc. in the buckle as this may prevent you from properly latching the tab and buckle.
- If the seat belt does not function normally, immediately contact your Toyota dealer. Do not use the seat until the seat belt is fixed. It cannot protect an adult occupant or your child from injury.

## SRS driver and front passenger airbags

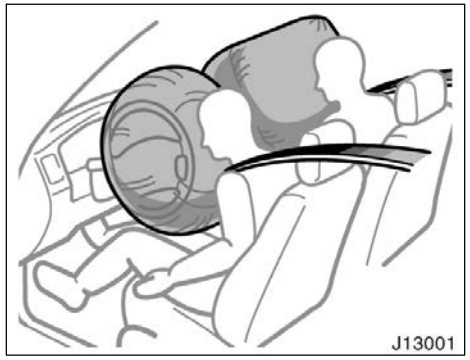


The SRS (Supplemental Restraint System) airbags are designed to provide further protection for the driver and front passenger when added to the primary protection provided by the seat belts.

In response to a severe frontal impact, the SRS airbags work together with the seat belts to help prevent or reduce injury by inflating, in order to decrease the likelihood of the driver's or front passenger's head or chest directly hitting the steering wheel or dashboard. The passenger airbag is activated even with no passenger in the front seat.

Be sure to wear your seat belt.

**⚠ CAUTION**

A driver or front passenger too close to the steering wheel or dashboard during airbag deployment can be killed or seriously injured. Toyota strongly recommends that:

- The driver sit as far back as possible from the steering wheel while still maintaining control of the vehicle.
- The front passenger sit as far back as possible from the dashboard.
- All vehicle occupants be properly restrained using the available seat belts.

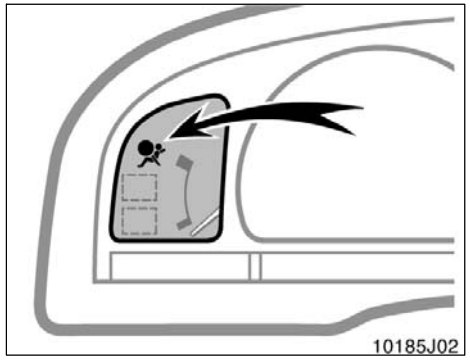


This indicator comes on when the ignition key is turned to the "ACC" or "ON" position. It goes off after about 6 seconds. This means the SRS airbags are operating properly.

The SRS airbag warning light system monitors the airbag sensor assembly, inflators, warning light, interconnecting wiring and power sources.

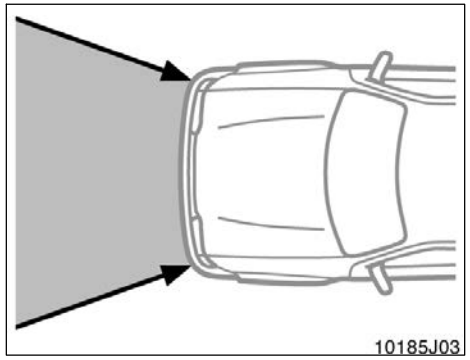


The SRS airbag system is designed to activate in response to a severe frontal impact within the shaded area between the arrows in the illustration.

There may be the case that the SRS airbags will not activate with such an impact in which the occupant wearing the seat belt correctly would not get serious injury.

The SRS airbags will deploy if the severity of the impact is above the designed threshold level, comparable to an approximate 20 km/h (14 mph) collision when impacting straight into a fixed barrier that does not move or deform.

If the severity of the impact is below the above threshold level, the SRS airbags may not deploy.

However, this threshold velocity will be considerably higher if the vehicle strikes an object, such as a parked vehicle or sign pole, which can move or deform on impact, or if it is involved in an underride collision (e.g. a collision in which the nose of the vehicle "underrides", or goes under, the bed of a truck).

It is possible with collision severity at the marginal level of airbag sensor detection and activation that only one of your vehicle's two airbags will deploy.

For the safety of all occupants, be sure to always wear seat belts.

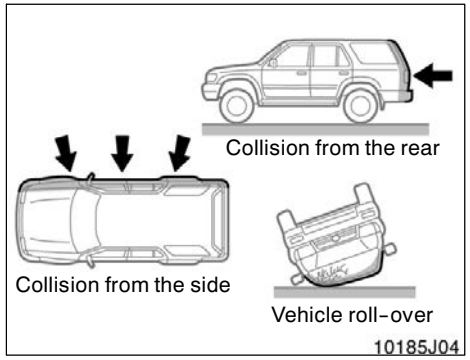


The SRS airbags are not designed to inflate if the vehicle is subjected to a side or rear impact, if it rolls over, or if it is involved in a low-speed frontal collision.

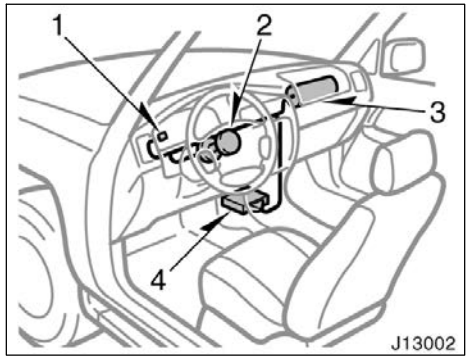


The SRS airbag system mainly consists of the following components and their locations are shown in the illustration.

1 SRS airbag warning light

2 Airbag module for driver (airbag and inflator)

3 Airbag module for passenger (airbag and inflator)

4 Airbag sensor assembly

The airbag sensor assembly consists of a safing sensor and airbag sensor.

In a severe frontal impact, sensors detect deceleration and the system triggers the airbag inflators. Then a chemical reaction in the inflators momentarily fills the airbags with non-toxic gas to help restrain the forward motion of the occupants.

When the airbags inflate, they produce a fairly loud noise and release some smoke along with non-toxic gas. This does not indicate a fire. Be sure to wash off any residue as soon as possible to prevent minor skin irritation.

Deployment of the airbags happen in a fraction of a second, so the airbags must inflate with considerable force. While the system is designed to reduce serious injuries, it may also cause minor burns or abrasions and swellings.

Parts of the airbag module (steering wheel hub, dashboard) may be hot for several minutes, but the airbags themselves will not be hot. The airbags are designed to inflate only once.

A crash severe enough to inflate the airbags may break the windshield as the vehicle buckles. In vehicles with a passenger airbag the windshield may also be damaged by absorbing some of the force of the inflating airbag.

**⚠ CAUTION**

- The SRS airbag system is designed only as a supplement to the primary protection of the driver side and front passenger side seat belt systems. The front seat occupants can be killed or seriously injured by an inflating airbag if they do not wear the available seat belts. During sudden braking just before a collision, an unrestrained driver or front passenger can move forward into direct contact with or close proximity to the airbag which may then deploy during the collision. To obtain maximum protection in an accident, the driver and all passengers in the vehicle must wear their seat belts. Wearing a seat belt during an accident reduces the chances of death or serious injuries or being thrown out of the vehicle. For instructions and precautions concerning the seat belt system, see “Seat belts” in this chapter.

- Improperly seated and/or restrained infants and children can be killed or seriously injured by a deploying airbag. An infant or child who is too small to use a seat belt should be properly secured using a child restraint system. Toyota strongly recommends that all infants and children be placed in the rear seat of the vehicle and properly restrained. The rear seat is the safest for infants and children. For instructions concerning the installation of a child restraint system, see “Child restraint” in this chapter.

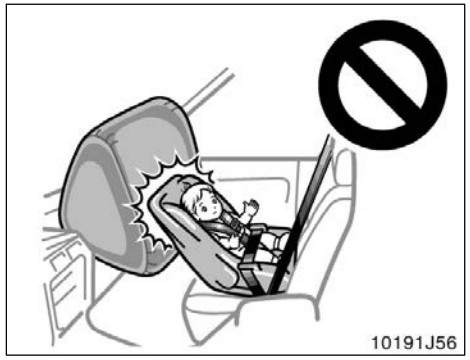


- Never put a rear-facing child restraint system in the front seat because the force of the rapid inflation of the passenger airbag can cause death or serious injury to the child.

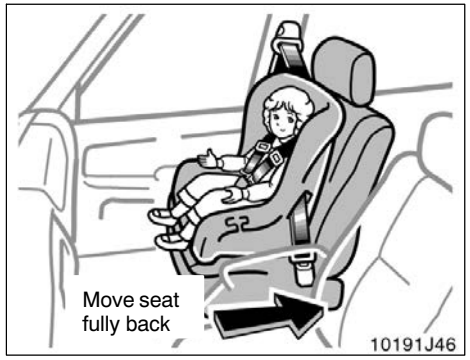


- A forward-facing child restraint system should be allowed to put on the front seat only when it is unavoidable. Always move the seat as far back as possible, because the force of a deploying airbag could cause death or serious injury to the child. For instructions concerning the installation of a child restraint system, see ”Child restraint” in this chapter.

- Do not sit on the edge of the seat or lean over the dashboard when the vehicle is in use. The airbags inflate with considerable speed and force; you may be killed or seriously injured. Sit up straight and well back in the seat, and always use your seat belt.

- Do not allow a child to stand up, or to kneel on the front passenger seat. The airbag inflates with considerable speed and force; the child may be killed or seriously injured.
- Do not hold a child on your lap or in your arms. Use a child restraint system in the rear seat. For instructions concerning the installation of a child restraint system, see "Child restraint" in this chapter.

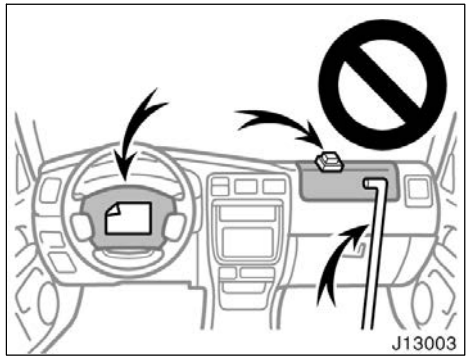


- Do not put objects or your pets on or in front of the dashboard or steering wheel pad that houses the airbag system. They might restrict inflation or cause death or serious injury as they are projected rearward by the force of deploying airbags. Likewise, the driver and front passenger should not hold things in their arms or on their knees.

- Do not modify or remove any wiring. Do not modify, remove, strike or open any components such as the steering wheel column cover, front passenger airbag cover, front passenger airbag, airbag sensor assembly. Doing any of these may cause sudden SRS airbag inflation or disable the system, which could result in death or serious injury.

Failure to follow these instructions can result in death or serious injuries.

NOTICE

Do not perform any of the following changes without consulting your Toyota dealer. Such changes can interfere with proper operation of the SRS airbag system in some cases.

◆Installation of electronic items such as a mobile two-way radio, cassette tape player or compact disc player

◆Modification of the suspension system

◆Modification of the front end structure

◆Attachment of a grille guard (bull bar, kangaroo bar, etc.), snowplow, winches or any other equipment to the front end

◆Repairs made on or near the front end structure, console, steering column, steering wheel or dashboard near the front passenger airbag

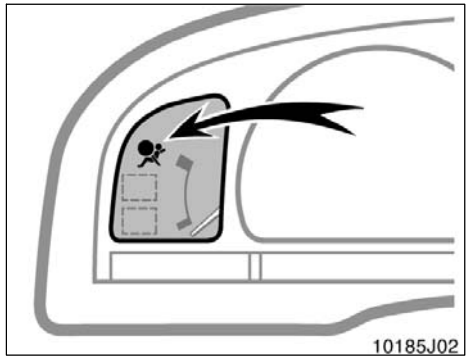


This SRS airbag system has a service reminder indicator to inform the driver of operating problems. If either of the following conditions occurs, this indicates a malfunction of the airbags. Contact your Toyota dealer as soon as possible to service the vehicle.

- The light does not come on when the ignition key is turned to the ”ACC” or ”ON” position, or remains on.
- The light comes on while driving.

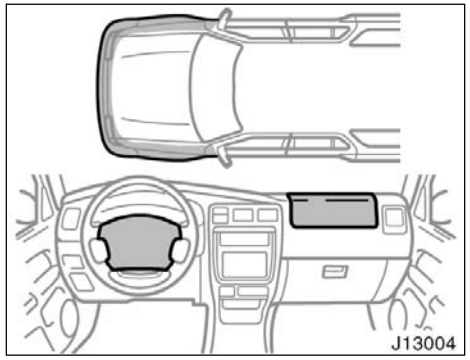


In the following cases, contact your Toyota dealer as soon as possible:

- The SRS airbags have been inflated.
- The front part of the vehicle (shaded in the illustration) were involved in an accident that did not cause the SRS airbags to inflate.
- The pad section of the steering wheel or front passenger airbag cover (shaded in the illustration) is scratched, cracked, or otherwise damaged.

NOTICE

Do not disconnect the battery cables before contacting your Toyota dealer.

## Child restraint—
## —Child restraint precautions

Toyota strongly urges the use of child restraint systems for children small enough to use them.

The laws of all fifty states in the U.S.A. and Canada now require the use of a child restraint system.

Your vehicle conforms to SAE J1819.

If a child is too large for a child restraint system, the child should sit in the rear seat and must be restrained using the vehicle's seat belt. See "Seat belts" for details.

⚠ CAUTION

- For effective protection in automobile accidents and sudden stops, children must be properly restrained using a seat belt or child restraint system depending on the age and size of the child. Holding a child in your arms is not a substitute for a child restraint system. In an accident, the child can be crushed against the windshield, or between you and the vehicle's interior.

- Toyota strongly urges use of a proper child restraint system which conforms to the size of the child, and is put on the rear seat. According to accident statistics, the child is safer when properly restrained in the rear seat than in the front seat.
- Never put a rear-facing child restraint system on the front seat. In the event of an accident, the force of the rapid inflation of the airbag can cause death or serious injury if a rear-facing child restraint system is put on the front seat.
- Unless it is unavoidable, do not put a forward-facing child restraint system on the front seat.
- A forward-facing child restraint system should be put on the front seat only when it is unavoidable. Always move the seat as far back as possible, because the force of a deploying airbag could cause death or serious injury to the child.
- Make sure that you have complied with all installation instructions provided by the child restraint manufacturer and that the system is properly secured.

## —Child restraint system

A child restraint system for a small child or baby must itself be properly restrained on the seat with either the lap belt or the lap portion of the lap/shoulder belt. You must carefully consult the manufacturer's instructions which accompany your child restraint system.

To provide proper restraint, use a child restraint system following the manufacturer's instructions about the appropriate age and size of the child for the child restraint system.

Install the child restraint system correctly following the instructions provided by its manufacturer of the system. General directions are also provided under the following illustrations.

The child restraint system should be installed on the rear seat. According to accident statistics, the child is safer when properly restrained in the rear seat than in the front seat.

**⚠ CAUTION**

- Never put a rear-facing child restraint system on the front seat. In the event of an accident, the force of the rapid inflation of the airbag can cause death or serious injury if a rear-facing child restraint system is put on the front seat.
- Unless it is unavoidable, do not put a forward-facing child restraint system on the front seat.
- A forward-facing child restraint system should be put on the front seat only when it is unavoidable. Always move the seat as far back as possible, because the force of a deploying airbag could cause death or serious injury to the child.
- After installing the child restraint system, make sure it is secured in place following the manufacturer's instructions. If it is not restrained securely, it may cause death or serious injury to the child in the event of a sudden stop or accident.

When not using the child restraint system, keep it secured with the seat belt or place it somewhere other than the passenger compartment. This will prevent it from injuring passengers in the event of a sudden stop or accident.

Your vehicle has anchors for securing the top strap of a child restraint system. The anchor nuts are welded beneath the sheet metal to permit installation of an anchor bracket for a child restraint system.

To install an anchor bracket, use an 8 mm X 30 mm X 1.25 mm coarse thread metric bolt and a 10 mm (0.4 in.) spacer. Note that the bolts accompanying many child restraint systems are not metric. You can damage the anchor nuts on your vehicle if you force bolts with different thread into the anchor nuts.

For instructions about how to install the anchor bracket, see "Top strap anchors and locations".

If your child restraint system does not provide any of the necessary parts, you can purchase the following items from your Toyota dealer.

* CRS installation kit
  (Part No. 04731-22012) —contains 1 bolt, 3 types of spacers and 1 locking clip.
* Bolt (Part No. 91511-60830)

## —Types of child restraint system

Child restraint systems are classified into the following 3 types depending on the child's age and size.

(A) Infant seat
(B) Convertible seat
(C) Booster seat

Install the child restraint system following the instructions provided by its manufacturer.

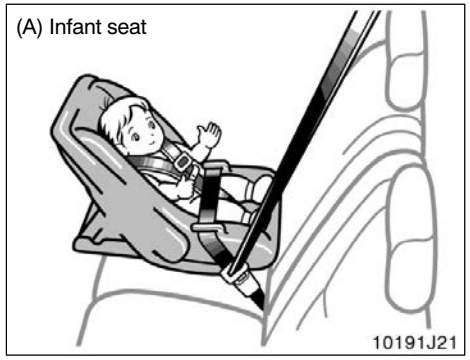


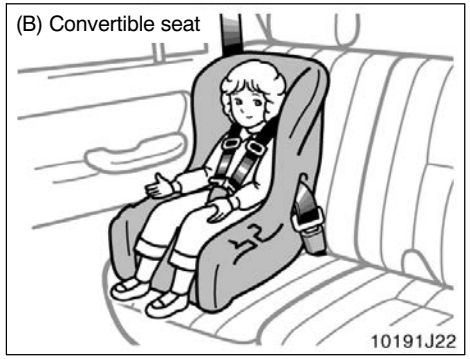

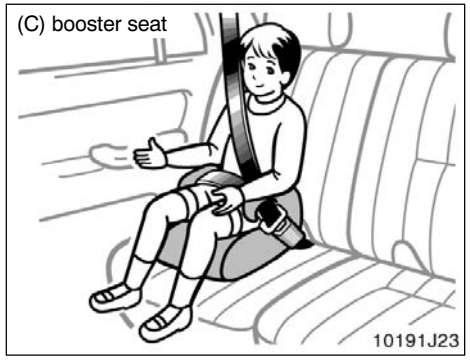


—Installation with 2-point type seat belt

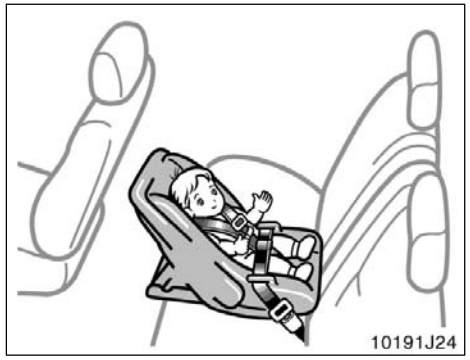


(A) INFANT SEAT INSTALLATION

An infant seat is used in rear-facing position only.

**⚠ CAUTION**

Do not put a rear-facing child restraint system on the rear seat if it interferes with the lock mechanism of the front seats. This can cause severe injury to the child and front passenger in case of sudden braking or a collision.

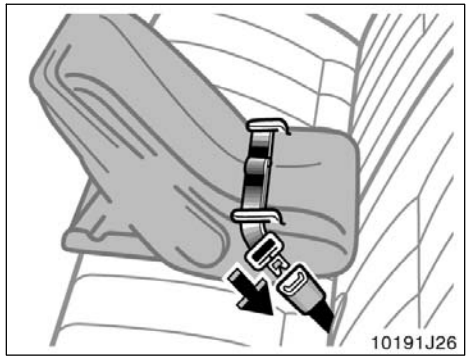


1. Run the center lap belt through or around the infant seat following the instructions provided by its manufacturer and insert the tab into the buckle taking care not to twist the lap belt.

**⚠ CAUTION**

- After inserting the tab, make sure the tab and buckle are locked and that the lap belt is not twisted.
- Do not insert coins, clips, etc. in the buckle as this may prevent you from properly latching the tab and buckle.
- If the seat belt does not function normally, it cannot protect your child from injury. Contact your Toyota dealer immediately. Do not use the seat until the seat belt is fixed.

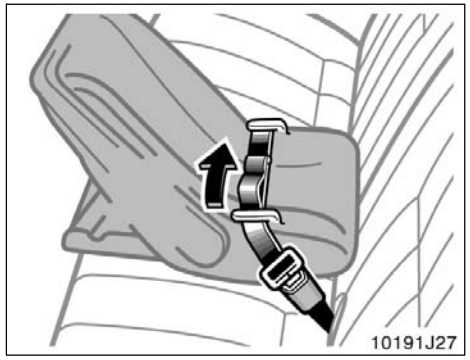


2. While pressing the infant seat firmly against the seat cushion and seatback, tighten the lap belt by pulling its free end to hold the infant seat securely.

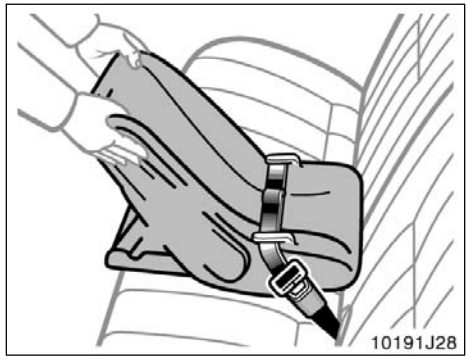


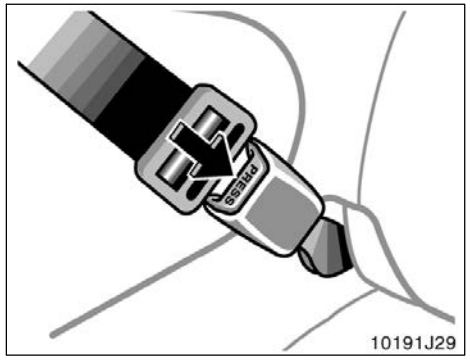


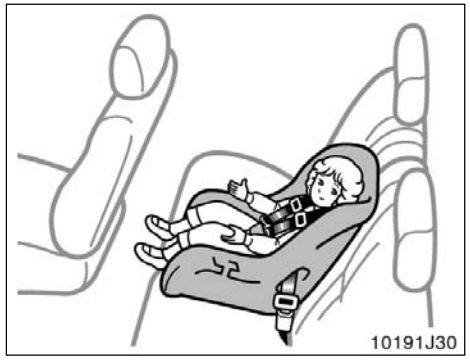


**⚠ CAUTION**

Push and pull the child restraint system in different directions to be sure it is secure. Follow all the installation instructions provided by its manufacturer.

3. To remove the infant seat, press the buckle-release button.

(B) CONVERTIBLE SEAT INSTALLATION

A convertible seat is used in forward-facing and rear-facing position depending on the child's age and size. When installing, follow the manufacturer's instructions about the applicable child's age and size as well as direction for installing of a child restraint system.

**⚠ CAUTION**

Do not put a rear-facing child restraint system on the rear seat if it interferes with the lock mechanism of the front seats. This can cause severe injury to the child and front passenger in case of sudden braking or a collision.

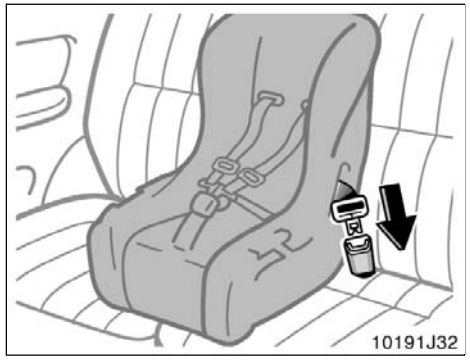


1. Run the center lap belt through or around the convertible seat following the instructions provided by its manufacturer and insert the tab into the buckle taking care not to twist the lap belt.

**⚠ CAUTION**

- After inserting the tab, make sure the tab and buckle are locked and that the lap belt is not twisted.
- Do not insert coins, clips, etc. in the buckle as this may prevent you from properly latching the tab and buckle.
- If the seat belt does not function normally, it cannot protect your child from injury. Contact your Toyota dealer immediately. Do not use the seat until the seat belt is fixed.

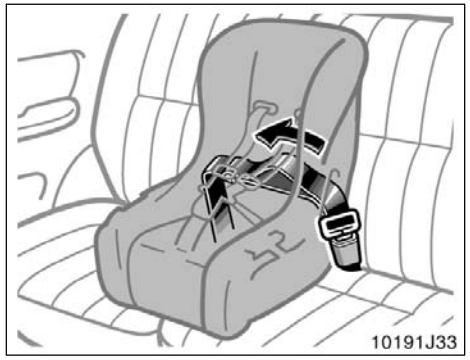


2. While pressing the convertible seat firmly against the seat cushion and seatback, tighten the lap belt by pulling its free end to hold the convertible seat securely.

**⚠ CAUTION**

Push and pull the child restraint system in different directions to be sure it is secure. Follow all the installation instructions provided by its manufacturer.

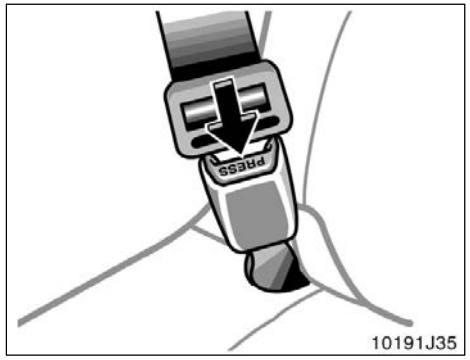


3. To remove the convertible seat, press the buckle-release button.

—Installation with 3-point type seat belt

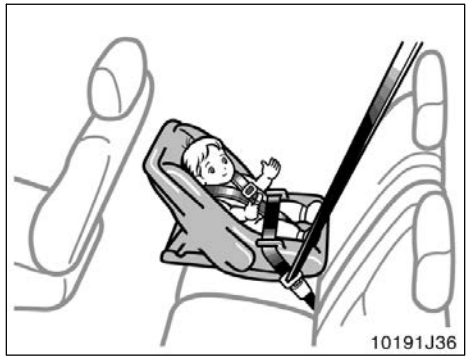


(A) INFANT SEAT INSTALLATION

An infant seat is used in rear-facing position only.

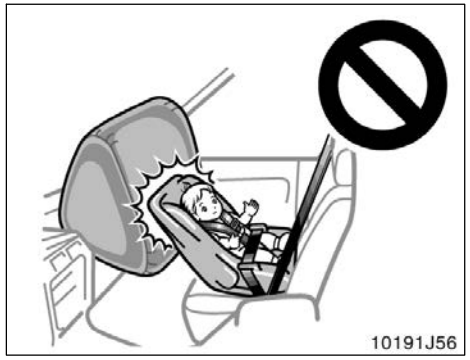


⚠ CAUTION

- Never put a rear-facing child restraint system in the front seat because the force of the rapid inflation of the passenger airbag can cause death or serious injury to the child.

- Do not put a rear-facing child restraint system in the rear seat if it interferes with the lock mechanism of the front seats. This can cause severe injury to the child and front passenger in case of sudden braking or a collision.

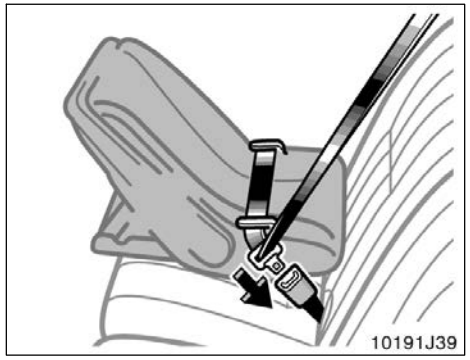


1. Run the lap and shoulder belt through or around the infant seat following the instructions provided by its manufacturer and insert the tab into the buckle taking care not to twist the belt. Keep the lap portion of the belt tight.

**⚠ CAUTION**

- After inserting the tab, make sure the tab and buckle are locked and that the lap and shoulder portions of the belt are not twisted.
- Do not insert coins, clips, etc. in the buckle as this may prevent you from properly latching the tab and buckle.
- If the seat belt does not function normally, it cannot protect your child from injury. Contact your Toyota dealer immediately. Do not use the seat until the seat belt is fixed.

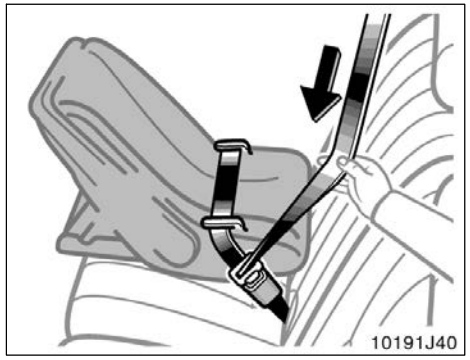


2. Fully extend the shoulder belt to put it in the lock mode. When the belt is then retracted even slightly, it cannot be extended.

To hold the infant seat securely, make sure the belt is in the lock mode before letting the belt retract.

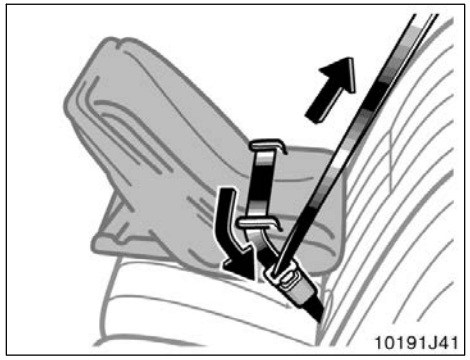


3. While pressing the infant seat firmly against the seat cushion and seatback, let the shoulder belt retract as far as it will go to hold the infant seat securely.

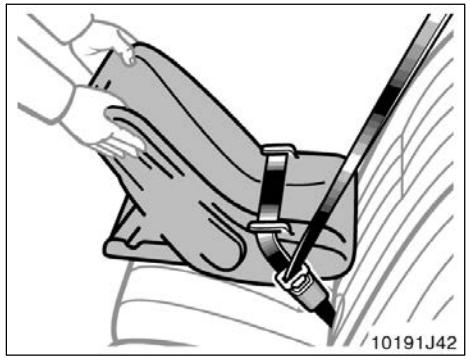


**⚠ CAUTION**

Make sure the seat belt is securely locked. Also make sure the child restraint system is secure by pushing and pulling it in different directions. Follow all the installation instructions provided by its manufacturer.

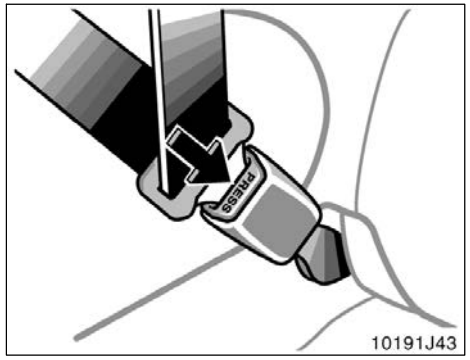


4. To remove the infant seat, press the buckle-release button and allow the belt to retract completely. The belt will move freely again and be ready to work for an adult or older child passenger.

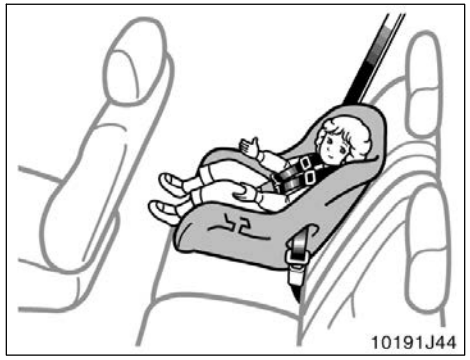


(B) CONVERTIBLE SEAT INSTALLATION

A convertible seat is used in forward-facing and rear-facing position depending on the child's age and size. When installing, follow the manufacturer's instructions about the applicable child's age and size as well as directions for installing a child restraint system.

⚠ CAUTION

- Never put a rear-facing child restraint system in the front seat because the force of the rapid inflation of the passenger airbag can cause death or serious injury to the child.

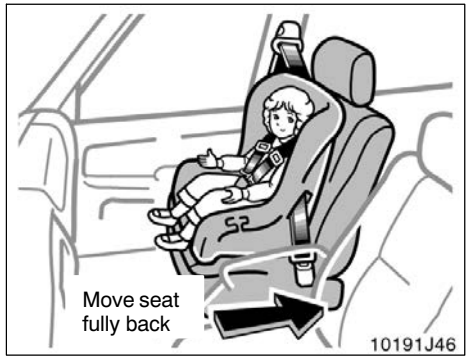


- A forward-facing child restraint system should be allowed to put on the front seat only when it is unavoidable. Always move the seat as far back as possible, because the force of a deploying airbag could cause death or serious injury to the child.

- Do not put a rear-facing child restraint system in the rear seat if it interferes with the lock mechanism of the front seats. This can cause severe injury to the child and front passenger in case of sudden braking or a collision.

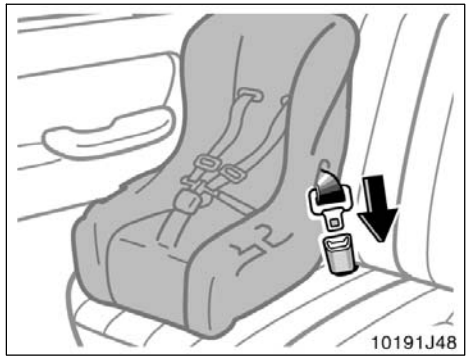


1. Run the lap and shoulder belt through or around the convertible seat following the instructions provided by its manufacturer and insert the tab into the buckle taking care not to twist the belt. Keep the lap portion of the belt tight.

**⚠ CAUTION**

- After inserting the tab, make sure the tab and buckle are locked and that the lap and shoulder portions of the belt are not twisted.
- Do not insert coins, clips, etc. in the buckle as this may prevent you from properly latching the tab and buckle.
- If the seat belt does not function normally, it cannot protect your child from injury. Contact your Toyota dealer immediately. Do not use the seat until the seat belt is fixed.

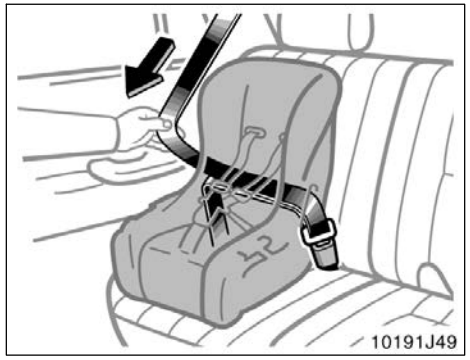


2. Fully extend the shoulder belt to put it in the lock mode. When the belt is then retracted slightly, it cannot be extended.

To hold the convertible seat securely, make sure the belt is in the lock mode before letting the belt retract.

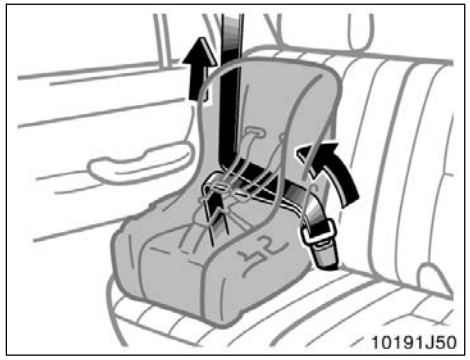


3. While pressing the convertible seat firmly against the seat cushion and seatback, let the shoulder belt retract as far as it will go to hold the convertible seat securely.

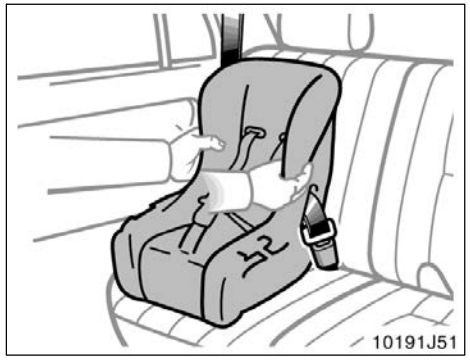


**⚠ CAUTION**

Make sure the seat belt is securely locked. Also make sure the child restraint system is secure by pushing and pulling it in different directions. Follow all the installation instructions provided by its manufacturer.

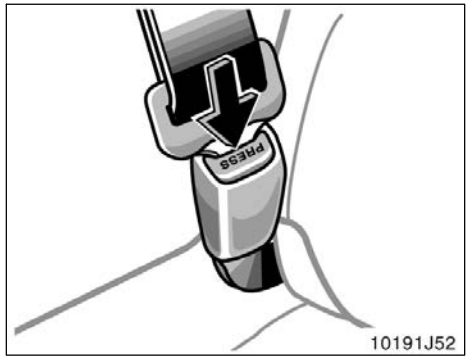


4. To remove the convertible seat, press the buckle-release button and allow the belt to retract completely. The belt will move freely again and be ready to work for an adult or older child passenger.

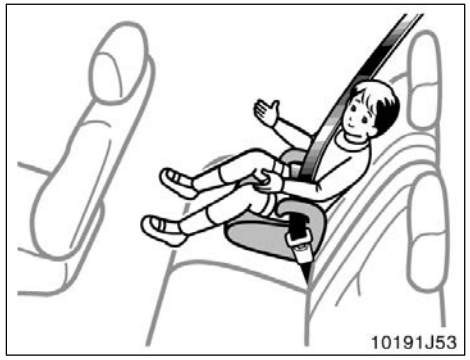


(C) BOOSTER SEAT INSTALLATION

A booster seat is used in forward-facing position only.

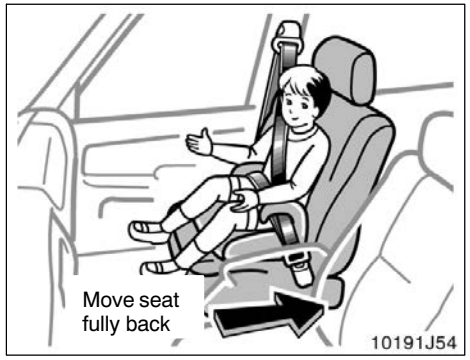


**⚠ CAUTION**

A forward-facing child restraint system should be allowed to put on the front seat only when it is unavoidable. Always move the seat as far back as possible, because the force of a deploying airbag could cause death or serious injury to the child.

1. Sit the child on a booster seat. Run the lap and shoulder belt through or around the booster seat and child following the instructions provided by its manufacturer and insert the tab into the buckle taking care not to twist the belt.

Make sure the shoulder belt is correctly across the child's shoulder and that the lap belt is positioned as low as possible on child's hips. See "Seat belts" for details.

**⚠ CAUTION**

- Always make sure the shoulder belt is positioned across the center of child's shoulder. The belt should be kept away from child's neck, but not falling off child's shoulder. Failure to do so could reduce the amount of protection in an accident and cause serious injuries in a collision.
- High-positioned lap belts and loose-fitting belts both could cause serious injuries due to sliding under the lap belt during a collision or other unintended result. Keep the lap belt positioned as low on hips as possible.
- For child's safety, do not place the shoulder belt under child's arm.
- After inserting the tab, make sure the tab and buckle are locked and that the lap and shoulder portions of the belt are not twisted.
- Do not insert coins, clips, etc. in the buckle as this may prevent you from properly latching the tab and buckle.

- If the seat belt does not function normally, it cannot protect your child from injury. Contact your Toyota dealer immediately. Do not use the seat until the seat belt is fixed.

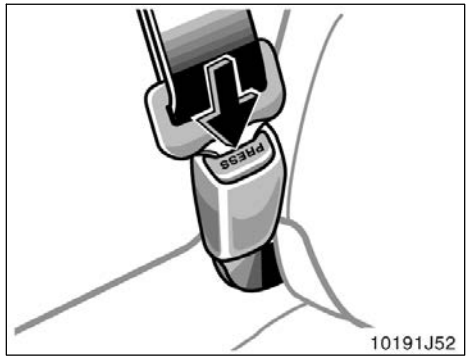


2. To remove the child restraint system, press the buckle-release button and allow the belt to retract.

## —Top strap anchors and locations

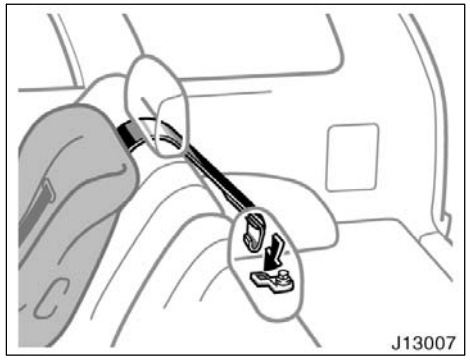


If your child restraint system requires the use of a top strap, latch the hook onto the anchor bracket and tighten the top strap.

See the following instructions to install the anchor bracket.

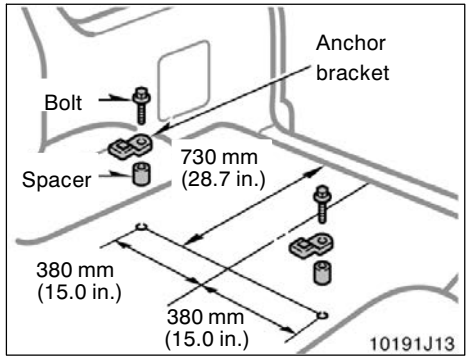


On the filler panel behind the rear seat

a. Using the illustration as a guide, run your fingers across the trim of the filler panel itself to locate the position of the holes underneath.

b. Make a hole in the covering directly above the hole in the filler panel.

c. Insert a 15 mm (0.6 in.) spacer and tighten down the anchor bracket for your child restraint system with a bolt. Torque the bolt to 16.5—24.7 N·m (1.68—2.52 kgf·m, 12.2—18.2 ft·lbf).

To comply with Canada Motor Vehicle Safety Standards, vehicles sold in Canada are provided with a bracket set in the glovebox, designed for use with any of the 3 anchor locations shown in the illustration.

If your child restraint system does not provide any of the necessary parts, ask your Toyota dealer. (See "—Child restraint system".)

## Tilt steering wheel

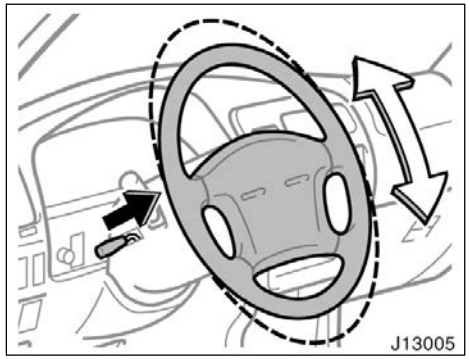


To change the steering wheel angle, hold the steering wheel, pull up the lock release lever, tilt the steering wheel to the desired angle and release the lever.

When the steering wheel is in a low position, it will spring up as you release the lock release lever.

**⚠ CAUTION**

- Do not adjust the steering wheel while the vehicle is moving.
- After adjusting the steering wheel, try moving it up and down to make sure it is locked in position.

## Outside rear view mirrors—

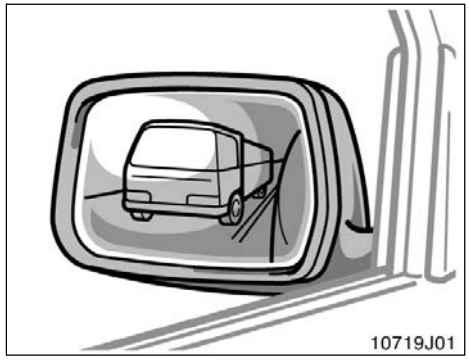


Adjust the mirror so you can see the side of your vehicle in the mirror.

Be careful when judging the size or distance of any object seen in the outside rear view mirror on the passenger's side. It is a convex mirror with a curved surface. Any object seen in a convex mirror will look smaller and farther away than when seen in a flat mirror.

**⚠ CAUTION**

Do not adjust the mirror while the vehicle is moving. It may cause the driver to mishandle the vehicle and an accident may occur resulting in personal injuries.

## —Power Rear view mirror control

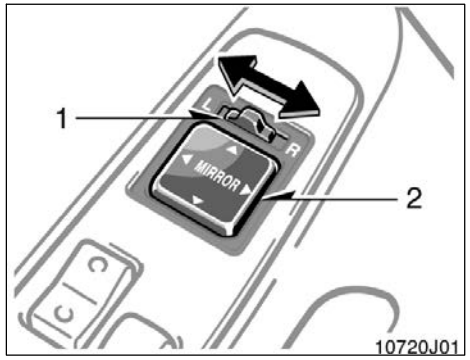


With power window (door armrest)

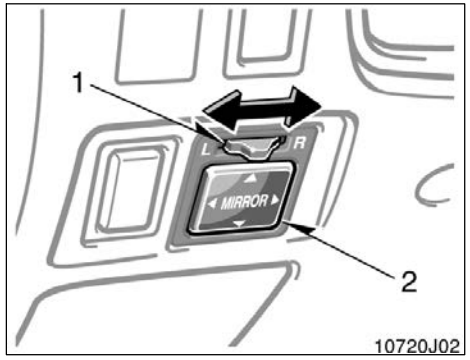


Without power window (instrument panel)

To adjust a mirror, use the switches.

1. Master switch—To select the mirror to be adjusted

Place the switch at ”L” (left) or ”R” (right).

2. Control switch—To move the mirror□ Push the switch in the desired direction.

If the engine is not running, the key must be in the ”ACC” position.

**NOTICE**

If ice should jam the mirror, do not operate the control or scrape the mirror face. Use a spray de-icer to free the mirror.

## —Folding rear view mirrors

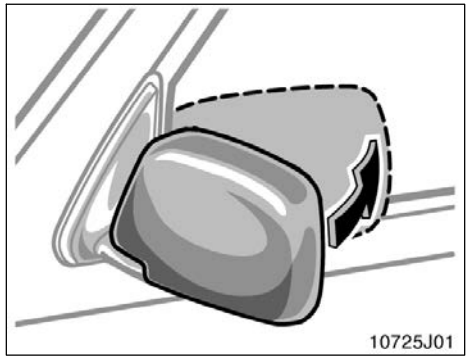


The rear view mirrors can be folded backward for parking in restricted areas.

To fold the rear view mirror, push backward.

**⚠ CAUTION**

Do not drive with the mirrors folded backward. Both the driver and passenger side rear view mirrors must be extended and properly adjusted before driving.

## Anti-glare inside rear view mirror

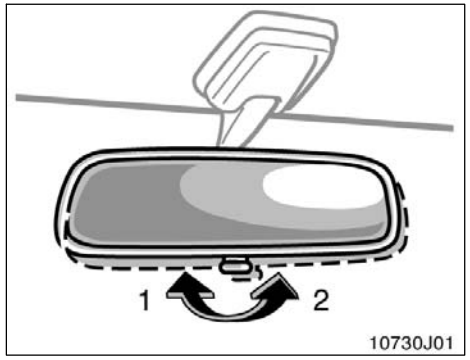


To reduce glare from the headlights of the vehicle behind you during night driving, operate the lever on the lower edge of the mirror.

Daylight driving—Lever at position 1

The reflection in the mirror has greater clarity at this position.

Night driving—Lever at position 2

Remember that by reducing glare you also lose some rear view clarity.

## Sun visors—
## —Vanity mirrors

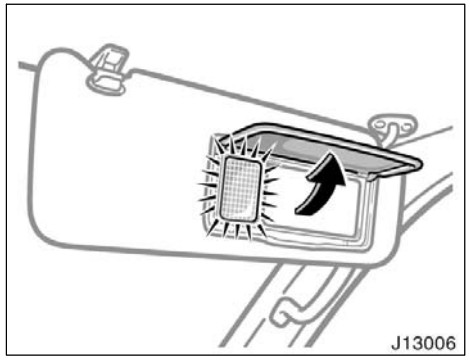


To use the vanity mirrors, swing down the sun visor and open the cover.

On some models, the vanity light comes on when you open the cover.

# Part 1 OPERATION OF INSTRUMENTS AND CONTROLS—

## Chapter 1-4 Lights, Wipers and Defogger

- Headlights and turn signals
- Emergency flashers
- Instrument panel light control
- Interior light
- Personal lights
- Luggage compartment light
- Ignition switch light
- Windshield wipers and washer
- Back window wiper and washer
- Back window defogger

## Headlights and turn signals

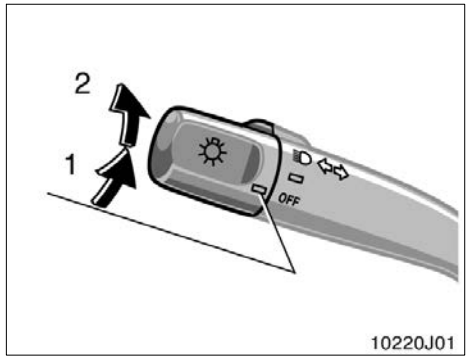


HEADLIGHTS

To turn on the following lights: Twist the headlight/turn signal lever knob.

Position 1—Parking, tail, license plate, side marker and instrument panel lights

Position 2—Headlights and all of the above

If you turn the ignition switch to the ”LOCK” position with the headlights left on, a buzzer reminds you to turn the lights off when you open the driver’s door.

| NOTICE |
| --- |
| To prevent the battery from being discharged, do not leave the lights on for a long period when the engine is not running. |

Daytime running light system (Canada only)

The headlights turn on when the parking brake is released with the engine started, even with the light switch in the ”OFF” position. They will not go off until the ignition switch is turned off.

To turn on the other exterior lights and instrument panel lights, twist the knob to the position 1.

Under the daytime running light system, the headlights turn on at reduced intensity. Twist the knob to the position 2 to turn to full intensity for driving at night.

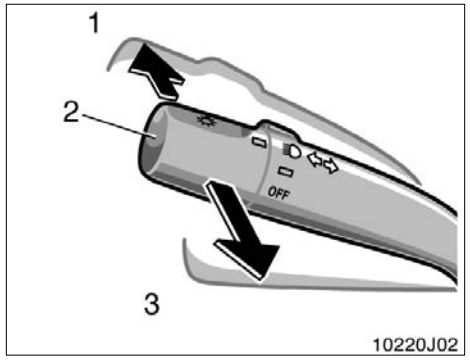


High-Low beams—For high beams, turn the headlights on and push the lever away from you (position 1). Pull the lever toward you (position 2) for low beams.

The headlight high beam indicator light (blue light) on the instrument panel will tell you that the high beams are on.

Flashing the high beam headlights (position 3)—Pull the lever all the way back. The high beam headlights turn off when you release the lever.

You can flash the high beam headlights with the knob turned to "OFF".

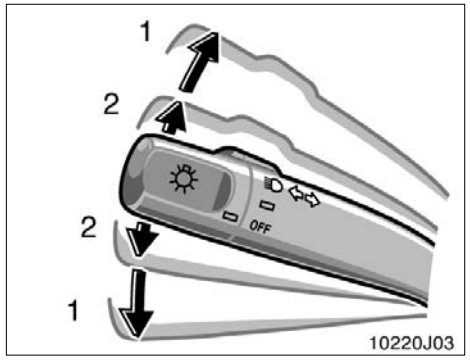


TURN SIGNALS

To signal a turn, push the headlight/turn signal lever up or down to position 1.

The key must be in the "ON" position.

The lever automatically returns after you make a turn, but you may have to return it by hand after you change lanes.

To signal a lane change, move the lever up or down to the pressure point (position 2) and hold it.

If the turn signal indicator lights (green lights) on the instrument panel flash faster than normal, a front or rear turn signal bulb is burned out.

## Emergency flashers

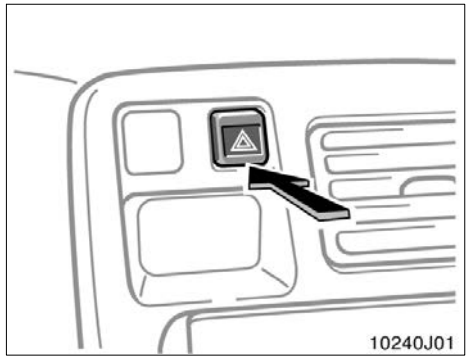


To turn on the emergency flashers, push the switch.

All the turn signal lights will flash. To turn them off, push the switch once again.

Turn on the emergency flashers to warn other drivers if your vehicle must be stopped where it might be a traffic hazard.

Always pull as far off the road as possible.

The turn signal light switch will not work when the emergency flashers are operating.

| NOTICE |
| --- |
| To prevent the battery from being discharged, do not leave the switch on longer than necessary when the engine is not running. |

## Instrument panel light control

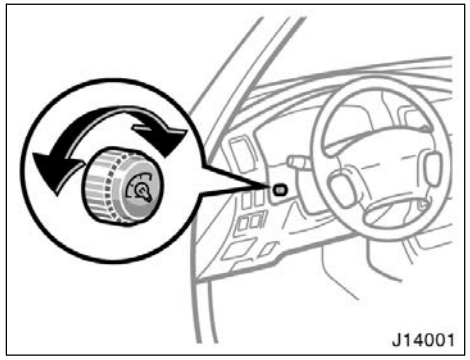


To adjust the brightness of the instrument panel lights, turn the knob.

## Interior light

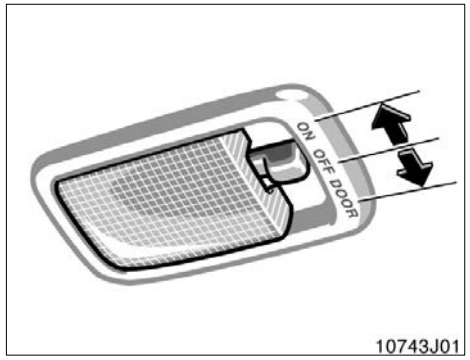


To turn on the interior light, slide the switch.

The interior light switch has the following positions:

”ON”—Keeps the light on all the time.
”OFF”—Turns the light off.
”DOOR”—Turns the light on when any of the side door is opened. The light goes off when all the side door is closed.

## Personal lights

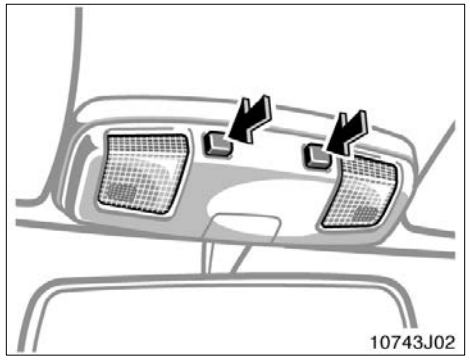


To turn on the personal light, push the switch. To turn the lights off, push the switch once again.

## Luggage compartment light

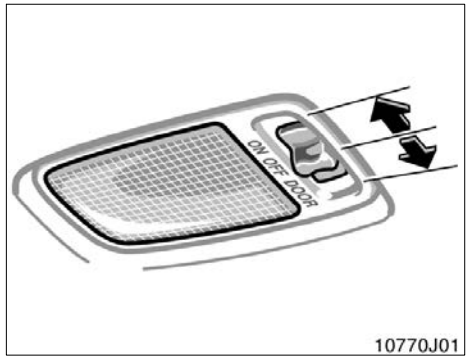


To turn on the luggage compartment light, slide the switch.

The luggage compartment light switch has the following positions:

”ON”—Keeps the light on all the time.
”OFF”—Turns the light off.
”DOOR”—Turns the light on when the back door is opened. The light goes off when the back door is closed.

## Ignition switch light

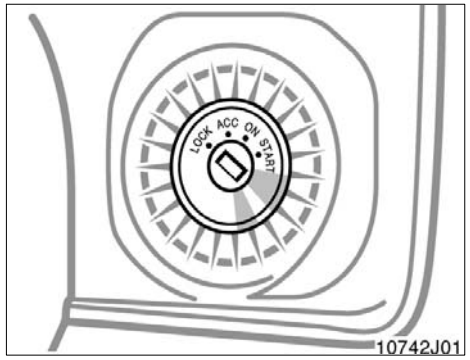


For easy access to the ignition switch, the ignition switch light comes on when the driver’s door is opened.

The light remains on for some time after driver’s door is closed.

## Windshield wipers and washer (intermittent type)

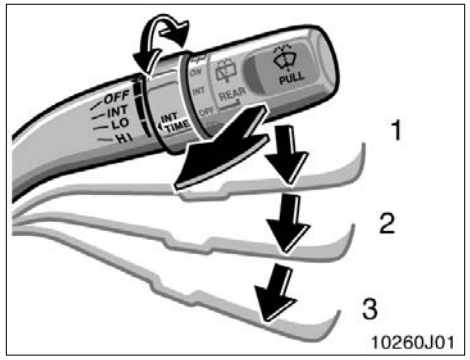


To turn on the windshield wipers, move the lever to the desired setting.

The key must be in the "ON" position.

| Lever position | Speed setting |
|---|---|
| Position 1 | Intermittent |
| Position 2 | Slow |
| Position 3 | Fast |

The "INT TIME" band lets you adjust the wiping time interval when the wiper lever is in the intermittent position (position 1). Twist the band upward to increase the time between sweeps, and downward to decrease it.

To squirt washer fluid, pull the lever toward you.

If the windshield wipers are off, they will operate a couple of times after the washer squirts.

For instructions on adding washer fluid, see "Adding washer fluid" in Chapter 7-3.

In freezing weather, warm the windshield with the defroster before using the washer. This will help prevent the washer fluid from freezing on your windshield, which can block your vision.

| NOTICE |
|---|
| Do not operate the wipers if the windshield is dry. It may scratch the glass. |

## Windshield wipers and washer (mist type)

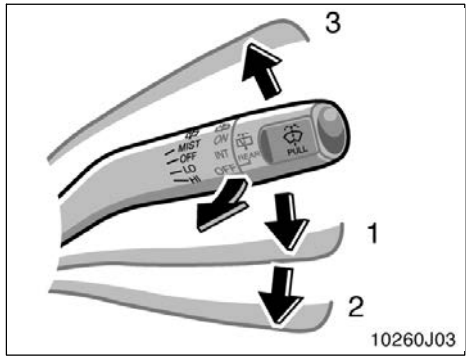


To turn on the windshield wipers, move the lever to the desired setting.

The key must be in the "ON" position.

| Lever position | Speed setting |
|---|---|
| Position 1 | Slow |
| Position 2 | Fast |

For a single sweep of the windshield, push the lever up and release it.

To squirt washer fluid, pull the lever toward you.

For instructions on adding washer fluid, see "Adding washer fluid" in Chapter 7-3.

In freezing weather, warm the windshield with the defroster before using the washer. This will help prevent the washer fluid from freezing on your windshield, which can block your vision.

| NOTICE |
| --- |
| Do not operate the wipers if the windshield is dry. It may scratch the glass. |

## Back window wiper and washer

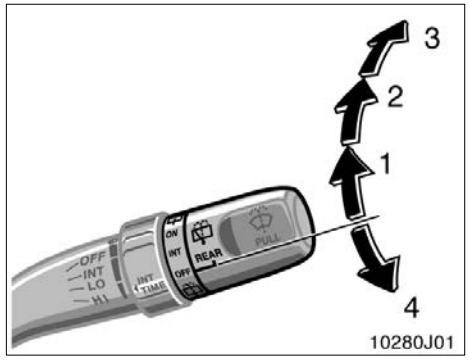


To turn on the back window wiper, twist the lever knob upward.

The key must be in the ”ON” position.

| Lever position | Speed setting |
| --- | --- |
| Position 1 | Intermittent |
| Position 2 | Normal |

To squirt washer fluid on the back window, twist the knob upward or downward as far as it will go (position 3 or 4). The knob automatically returns from these positions after you release it.

For instructions on adding washer fluid, see ”Adding washer fluid” in Chapter 7-3.

| NOTICE |
| --- |
| Do not operate the back window wiper if the back window is dry. It may scratch the glass. |

## Back window defogger

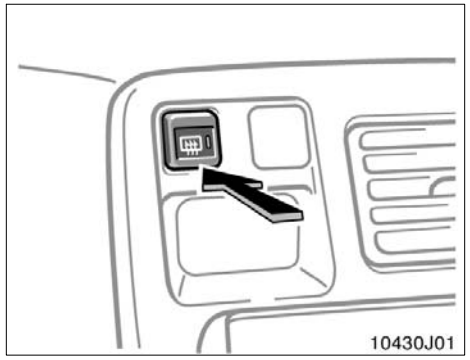


To defog or defrost the back window, push the switch.

The key must be in the ”ON” position.

The thin heater wires on the inside of the back window will quickly clear the surface. An indicator light will illuminate to indicate the defogger is operating.

Push the switch once again to turn the defogger off.

The system will automatically shut off after the defoggers have operated about 15 minutes.

Make sure you turn the defogger off when the window is clear. Leaving the defogger on for a long time could cause the battery to discharge, especially during stop-and-go driving. The defogger is not designed for drying rain water or for melting snow.

| NOTICE |
| --- |
| ◆To prevent the battery from being discharged, turn the switch on when the engine is running.<br>◆When cleaning the inside of the back window, be careful not to scratch or damage the heater wires. |

# Part 1 OPERATION OF INSTRUMENTS AND CONTROLS—

## Chapter 1-5 Gauges, Meters and Service reminder indicators

- Fuel gauge
- Engine coolant temperature gauge
- Tachometer
- Odometer and trip meter
- Service reminder indicators and warning buzzers

### Fuel gauge

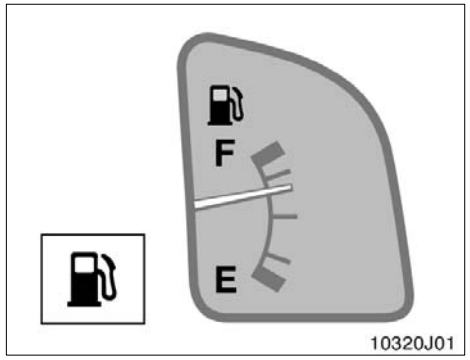


The gauge works when the ignition switch is on and indicates the approximate quantity of fuel remaining in the tank.

Nearly full—Needle at ”F”
Nearly empty—Needle at ”E”

It is a good idea to keep the tank over 1/4 full.

This fuel gauge has a non-return type needle which remains at the last indicated position when the ignition switch is turned off.

If the fuel level approaches ”E” or the low fuel level warning light comes on, fill the fuel tank as soon as possible.

On inclines or curves, due to the movement of fuel in the tank, the fuel gauge needle may fluctuate or the low fuel level warning light may come on earlier than usual.

If the fuel tank is completely empty, the malfunction indicator lamp comes on. Fill the fuel tank immediately.

The indicator lamp goes off after driving several times. If the indicator lamp does not go off, contact your Toyota dealer as soon as possible.

## Engine coolant temperature gauge

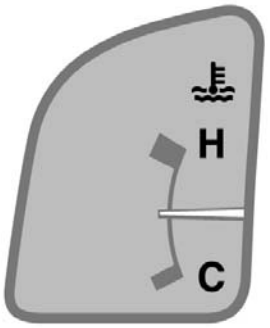

10330J01

The gauge indicates the engine coolant temperature when the ignition switch is on. The engine operating temperature will vary with changes in weather and engine load.

If the needle moves into the red zone, your engine is too hot. If your vehicle overheats, stop your vehicle and allow the engine to cool.

Your vehicle may overheat during severe operating conditions, such as:

- Driving up a long hill on a hot day.
- Reducing speed or stopping after high speed driving.
- Idling for a long period with the air conditioning on in stop-and-go traffic.
- Towing a trailer

| NOTICE |
|---|
| ◆Do not remove the thermostat in the engine cooling system as this may cause the engine to overheat. The thermostat is designed to control the flow of coolant to keep the temperature of the engine within the specified operating range.<br>◆Do not continue driving with an overheated engine. See "If your vehicle overheats" in Part 4. |

## Tachometer

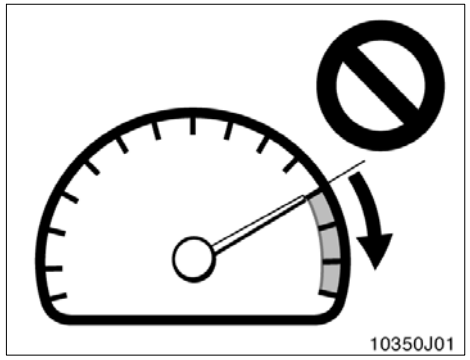
10350J01

The tachometer indicates engine speed in thousands of rpm (revolutions per minute). Use it while driving to select correct shift points and to prevent engine lugging and overrevving.

Driving with the engine running too fast causes excessive engine wear and poor fuel economy. Remember, in most cases the slower the engine speed, the greater the fuel economy.

| NOTICE |
|---|
| Do not let the indicator needle get into the red zone. This may cause severe engine damage. |

## Odometer and trip meter

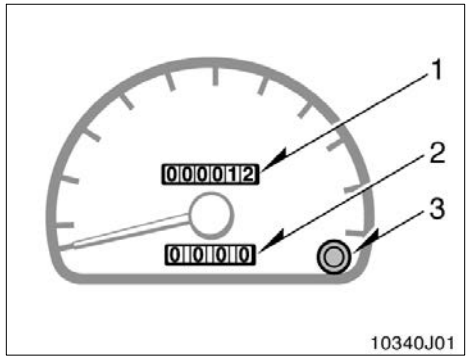


These meters show the running distance.

1. Odometer—It shows the total distance the vehicle has been driven.
2. Trip meter—It shows the distance driven since the last time it was set to zero. The black digits on white indicate tenths of kilometers or miles.
3. Trip meter reset knob—It resets the trip meter to zero.
   To reset the trip meter, push the knob.

## Service reminder indicators and warning buzzers

| If the indicator or buzzer comes on... | | Do this. |
|---|---|---|
| (a) | BRAKE | If parking brake is off, stop and check. |
| (b) | (Indicator and buzzer) | Fasten seat belts. |
| (c) | | Stop and check. |
| (d) | | Stop and check. |
| (e) | CHECK | Take vehicle to Toyota dealer. |
| (f) | | Fill up tank. |

| If the indicator or buzzer comes on... | | Do this. |
|---|---|---|
| (g) | ABS (type A) / ABS (type B) | Take vehicle to Toyota dealer. |
| (h) | | Close all doors. |
| (i) | | Take vehicle to Toyota□ dealer immediately. |
| (j) | Light reminder buzzer | Turn off lights. |
| (k) | Key reminder buzzer | Remove key. |

| If the indicator or buzzer comes on... | | Do this. |
|---|---|---|
| (l) | A/T P | Shift front drive control lever out of "N". |
| (m) | A/T OIL TEMP | Stop and check. |
| (n) | | Add washer fluid. |

(a) Brake System Warning Light

This light has the following functions:

Parking brake reminder

If this light is on, make sure the parking brake is fully released. The light should go off.

Low brake fluid level warning

If this light comes on and stays on while you are driving, slow down and pull off the road. Then stop the vehicle carefully. There may be a problem somewhere in the brake system. Check the fluid level of the see-through reservoir.

To make sure the parking brake has not caused the warning light to come on, check to see that the parking brake is fully released.

If the brake fluid level is low...

At a safe place, test your brakes by starting and stopping.

- If you judge that the brakes still work adequately, drive cautiously to your nearest dealer or shop for repairs.
- If the brakes are not working, have the vehicle towed in for repairs. (For towing information, see Part 4.)

**⚠ CAUTION**

It is dangerous to continue driving normally when the brake fluid level is low.

If the brake fluid level is correct...

Have the warning system checked by your Toyota dealer.

(b) Seat Belt Reminder Light and Buzzer

Once the ignition key is turned to "ON" or "START", the reminder light and buzzer come on if the driver's seat belt is not fastened. Unless the driver fastens the belt, the light keeps on flickering and the buzzer sounds for about 4 to 8 seconds.

(c) Discharge Warning Light

This light warns that the battery is being discharged.

If it comes on while you are driving, there is a problem somewhere in the charging system.

The engine ignition will continue to operate, however, until the battery is discharged. Turn off the air conditioning, blower, radio, etc., and drive directly to the nearest Toyota dealer or repair shop.

| NOTICE |
| --- |
| Do not continue driving if the engine drive belt is broken or loose. |

(d) Low Oil Pressure Warning Light

This light warns that the engine oil pressure is too low.

If it flickers or stays on while you are driving, pull off the road to a safe place and stop the engine immediately. Call a Toyota dealer or qualified repair shop for assistance.

The light may occasionally flicker when the engine is idling or it may come on briefly after a hard stop. There is no cause for concern if it then goes out when the engine is accelerated slightly.

The light may come on when the oil level is extremely low. It is not designed to indicate low oil level, and the oil level must be checked using the level dipstick.

| NOTICE |
| --- |
| Do not drive the vehicle with the warning light on—even for one block. It may ruin the engine. |

(e) Malfunction Indicator Lamp

This lamp comes on in the following cases.

a. The fuel tank is completely empty. (See "Fuel gauge" in Chapter 1-5 for instructions.)

b. The fuel tank cap is not tightened securely. (See "Fuel tank cap" in Chapter 1-2 for instructions.)

c. There is a problem somewhere in your engine or automatic transmission electrical system.

If it comes on while you are driving in case c, have your vehicle checked/repaired by your Toyota dealer as soon as possible.

(f) Low Fuel Level Warning Light

This light comes on when the fuel level in the tank becomes nearly empty. Fill up the tank as soon as possible.

On inclines or curves, due to the movement of fuel in the tank, the low fuel level warning light may come on earlier than usual.

(g) "ABS" Warning Light

This light warns that there is a problem somewhere in your anti-lock brake system.

If the light comes on while you are driving, have your vehicle checked by your Toyota dealer as soon as possible.

The light will come on when the ignition key is turned to the "ON" position. After about 3 seconds, the light will go off.

When the "ABS" warning light is on (and the brake system warning light is off), the brake system operates conventionally but anti-lock brake system is not assisting brake performance so that the wheels can lock-up during sudden braking or braking on slippery road surfaces.

Vehicles with rear differential lock system—
The anti-lock brake system does not operate when the rear differential is locked. It is normal operation for the "ABS" warning light to be on at this time.

(h) Open Door Warning Light

This light remains on until all the doors and back door are completely closed.

(i) SRS Airbag Warning Light

This light will come on when the ignition key is turned to the "ACC" or "ON" position. After about 6 seconds, the light will go off. This means the airbag system is operating properly.

The warning light system monitors the airbag sensor assembly, inflators, warning light, interconnecting wiring and power sources.

If either of the following conditions occurs, this indicates a malfunction somewhere in the parts monitored by the warning light system. Contact your Toyota dealer as soon as possible to service the vehicle.

- The light does not come on when the ignition key is turned to the "ACC" or "ON" position or remains on.
- The light comes on while driving.

(j) Light Reminder Buzzer

This buzzer will sound if the driver's door is opened while the ignition switch is turned to the "LOCK" position with the headlight switch on. Removing the key will not stop the buzzer as long as the headlight switch is on.

(k) Key Reminder Buzzer

This buzzer reminds you to remove the key when you open the driver's door with the ignition key in the "ACC" or "LOCK" position.

(l) Unengaged "Park" Warning Light□ (vehicles with automatic transmission)

This light warns that the transmission "Park" mechanism is not engaged. If the front drive control lever is in the "N" position while the selector lever is in the "P" position, the transmission will disengage and the wheels will not lock.

| ⚠ CAUTION |
| --- |
| To restore the park function, shift the front drive control lever out of "N", or the vehicle can move. |

(m) Automatic Transmission Fluid Temperature Warning Light

This light warns that the automatic transmission fluid temperature is too high.

If this light comes on while you are driving, slow down and pull off the road. Stop the vehicle at a safe place and put the selector lever in "P". With the engine idling, wait until the light goes off. If the light goes off, you may start the vehicle again. If the light does not go off, call a Toyota dealer or qualified repair shop for assistance.

| NOTICE |
| --- |
| Continued driving with the warning light on may damage the automatic transmission. |

(n) Low windshield Washer Fluid Level Warning Light (Canada)

The light warns that the windshield washer fluid level is too low. Add washer fluid at your earliest opportunity. (For instructions, see "Adding washer fluid" in Chapter 7-3.)

CHECKING SERVICE REMINDER INDICATORS

1. Apply the parking brake.
2. Open one of the side doors or the back door.
   The open door warning light should come on.
3. Close the door.
   The open door warning light should go off.
4. Turn the ignition key to ”ACC”.
   The SRS airbag warning light should come on. It goes off after about 6 seconds.
5. Turn the ignition key to ”ON”, but do not start the engine.
   All the service reminder indicators except the open door warning light and SRS airbag warning light should come on. The ”ABS” warning light goes off after about 3 seconds.

If any service reminder indicator or warning buzzer does not function as described above, either the bulb is burned out or the circuit is in need of repair. Have it checked by your Toyota dealer as soon as possible.

# Part 1 OPERATION OF INSTRUMENTS AND CONTROLS—

## Chapter 1-6 Ignition switch, Transmission and Parking brake

- Ignition switch with steering lock
- Automatic transmission
- Manual transmission
- Four-wheel drive system
- Rear differential look system
- Parking brake
- Cruise control
- Clutch start cancel switch

### Ignition switch with steering lock

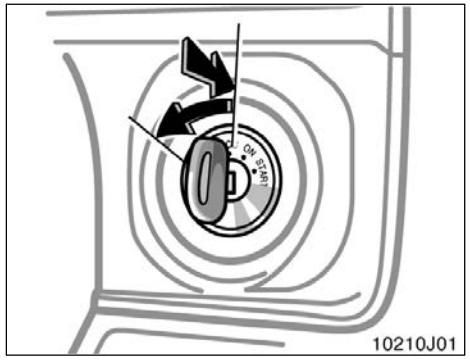


”START”—Starter motor on. The key will return to the ”ON” position when released.

For starting tips, see Part 3.

”ON”—Engine on and all accessories on.

This is the normal driving position.

”ACC”—Accessories such as the radio operate, but the engine is off.

If you leave the key in the ”ACC” or ”LOCK” position and open the driver’s door, a buzzer will remind you to remove the key.

”LOCK”—Engine is off and the steering wheel is locked. The key can be removed only at this position.

Vehicles with manual transmission—
You must push in the key to turn the key from ”ACC” to the ”LOCK” position.

Vehicles with automatic transmission—
You must shift the selector lever into the ”P” position before turning the key from ”ACC” to the ”LOCK” position.

When starting the engine, the key may seem stuck at the ”LOCK” position. To free it, first be sure the key is pushed all the way in, and then rock the steering wheel slightly while turning the key gently.

**⚠ CAUTION**

For manual transmission:

Never remove the key when the vehicle is moving, as this will lock the steering wheel and result in loss of steering control.

**NOTICE**

Do not leave the key in the ”ON” position if the engine is not running. The battery will discharge and the ignition could be damaged.

## Automatic transmission

▶Two-wheel drive models

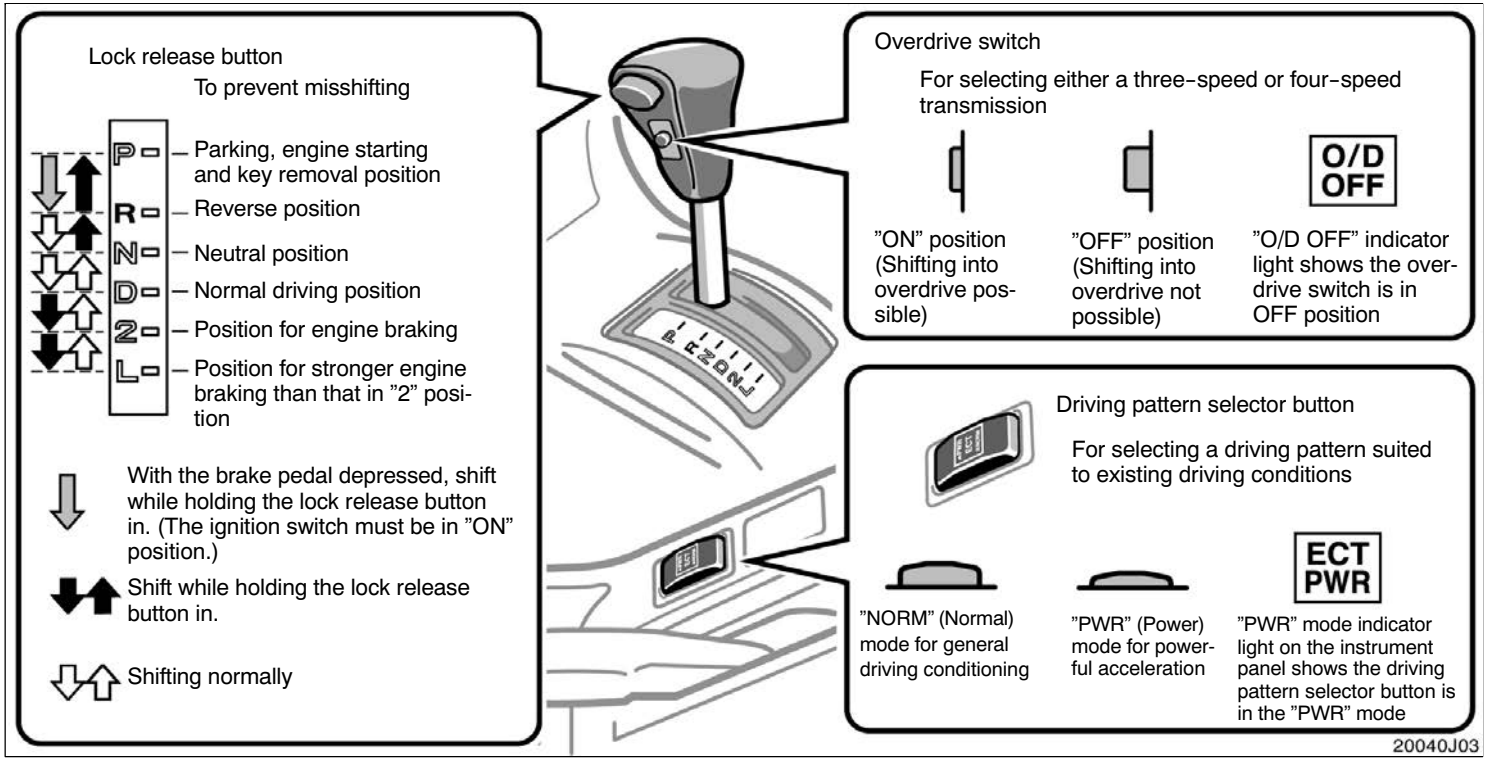


Vehicles with cruise control — When the cruise control is being used, even if you downshift the transmission by turning off the overdrive switch, engine braking will not be applied because the cruise control is not cancelled. For ways to decrease the vehicle speed, see "Cruise control" in this chapter.

Your automatic transmission has a shift lock system to minimize the possibility of incorrect operation. This means you can only shift out of ”P” position when the brake pedal is depressed (with the ignition switch in ”ON” position and the lock release button depressed).

(a) Normal driving

1. Start the engine as instructed in ”How to start the engine” in Part 3. The transmission must be in ”P” or ”N”.
2. With your foot holding down the brake pedal, shift the selector lever to ”D”.

In ”D” position, the automatic transmission system will select the most suitable gear for running conditions such as normal cruising, hill climbing, hard towing, etc.

Always turn the overdrive switch on for better fuel economy and quieter driving. If the engine coolant temperature is low, the transmission will not shift into the overdrive gear even with the overdrive switch on.

**⚠ CAUTION**

Never put your foot on the accelerator pedal while shifting.

3. Release the parking brake and brake pedal. Depress the accelerator pedal slowly for smooth starting.

(b) Using engine braking

To use engine braking, you can downshift the transmission as follows:

- Turn off the overdrive switch. The ”O/D OFF” indicator light will come on and the transmission will downshift to the third gear.
- Shift into the ”2” position. The transmission will downshift to the second gear when the vehicle speed drops down to or lower than the following speed, and more powerful engine braking will be obtained.

  3RZ-FE engine.....112 km/h (69 mph)

  5VZ-FE engine.....119 km/h (73 mph)
- Shift into the ”L” position. The transmission will downshift to the first gear When the vehicle speed drops down to or lower than the following speed, and maximum engine braking will be applied.

  3RZ-FE engine.....54 km/h (33 mph)

  5VZ-FE engine.....58 km/h (36 mph)

Vehicles with cruise control—When the cruise control is being used, even if you downshift the transmission by turning off the overdrive switch, engine braking is not applied because the cruise control is not cancelled.

For ways to decrease the vehicle speed, see ”Cruise control” in this chapter.

**⚠ CAUTION**

Be careful when downshifting on a slippery surface. Abrupt shifting could cause the vehicle to spin or skid.

(c) Using ”2” and ”L” positions

The ”2” and ”L” positions are used for strong engine braking as described previously.

With the selector lever in ”2” or ”L”, you can start the vehicle in motion as with the lever in ”D”.

With the selector lever in ”2”, the vehicle will start in the first gear and automatically shift to the second gear.

With the selector lever in ”L”, the transmission is engaged in the first gear.

NOTICE

◆Be careful not to overrev the engine. Watch the tachometer to keep engine rpm from going into the red zone. The approximate maximum allowable speed for each position is given below for your reference:

”2”.....120 km/h (74 mph)
”L”..... 65 km/h (40 mph)

◆Do not continue hill climbing or hard towing for a long time in the ”2” or ”L” position. This may cause severe automatic transmission damage from overheating. To prevent such damage, ”D” position should be used in hill climbing or hard towing.

(d) Backing up

1. Bring the vehicle to a complete stop.
2. With the brake pedal held down with your foot, shift the selector lever to the ”R” position.

NOTICE

Never shift into reverse while the vehicle is moving.

(e) Parking

1. Bring the vehicle to a complete stop.
2. Pull the parking brake lever up fully to securely apply the parking brake.
3. With the brake pedal pressed down, shift the selector lever to the ”P” position.

⚠ CAUTION

While the vehicle is moving, never attempt to move the selector lever into ”P” position under any circumstances. Serious mechanical damage and loss of vehicle control may result.

(f) Good driving practice

- If the transmission is repeatedly upshifted and downshifted between third gear and overdrive when climbing a gentle slope, the overdrive switch should be turned off. Be sure to turn the switch on immediately afterward.
- When towing a trailer, in order to maintain engine braking efficiency, do not use overdrive.

⚠ CAUTION

Always keep your foot on the brake pedal while stopped with the engine running. This prevents the vehicle from creeping.

NOTICE

Do not hold the vehicle on an upgrade with the accelerator pedal. It can cause the transmission to overheat. Always use the brake pedal or parking brake.

(g) Rocking your vehicle if stuck

**⚠ CAUTION**

To rock your vehicle if it becomes stuck in snow, mud, sand, etc., first check that there are no objects or people around the vehicle. During the rocking operation the vehicle may suddenly move forward or backward as it becomes unstuck, causing injury or damage to nearby people or objects.

**NOTICE**

If you rock your vehicle, observe the following precautions to prevent damage to the transmission and other parts.

- Do not depress the accelerator pedal while shifting the selector lever or before the transmission is completely shifted to forward or reverse gear.
- Do not race the engine and avoid spinning the wheels.
- If your vehicle remains stuck after rocking the vehicle several times, consider other ways such as towing.

(h) Driving in ”PWR” (Power) mode

In the ”PWR” mode, the transmission is shifted up and down at a higher vehicle speed than in the ”NORM” (Normal) mode and a more powerful acceleration is achieved. To set the ”PWR” mode, push in the driving pattern selector button. The ”PWR” mode indicator light comes on.

For ordinary driving, Toyota recommends using the ”NORM” mode to improve fuel economy.

(i) If you cannot shift the selector lever out of ”P” position

If you cannot shift the selector lever from the ”P” position even though the brake pedal is depressed, use the shift lock override button. For instructions, see ”If you cannot shift automatic transmission selector lever” in Part 4.

## Automatic transmission

▶Four-wheel drive control

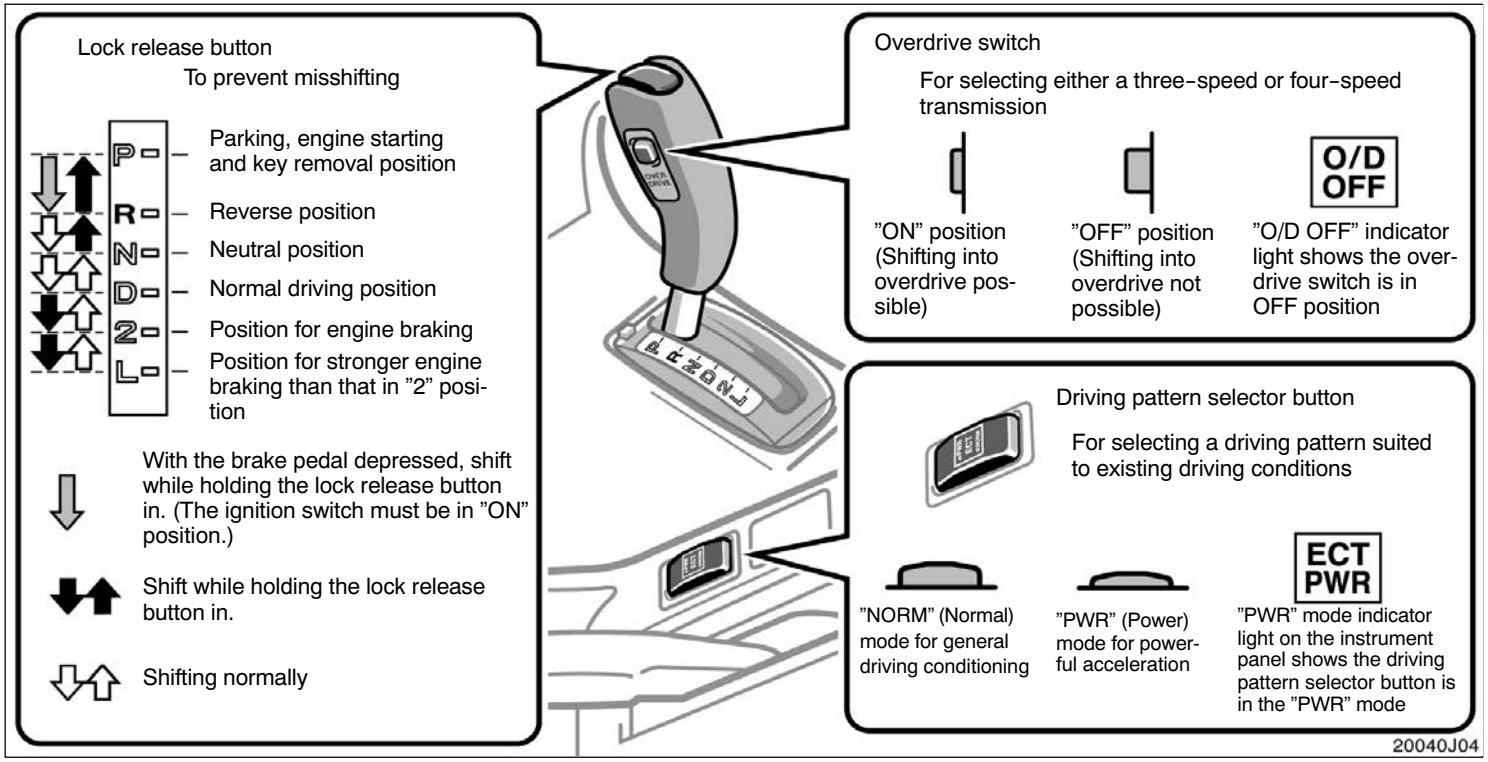


Vehicles with cruise control — When the cruise control is being used, even if you downshift the transmission by turning off the overdrive switch, engine braking will not be applied because the cruise control is not cancelled. For ways to decrease the vehicle speed, see "Cruise control" in this chapter.

Your automatic transmission has a shift lock system to minimize the possibility of incorrect operation. This means you can only shift out of "P" position when the brake pedal is depressed (with the ignition switch in "ON" position and the lock release button depressed).

(a) Normal driving

1. Start the engine as instructed in "How to start the engine" in Part 3. The transmission must be in "P" or "N".

When the front drive control lever is in "L4" (low-speed position, four-wheel drive), the driving pattern selector setting has no effect on gear shift timing. (See "Four-wheel drive system" in this Chapter for information of the front drive control lever.)

2. With your foot holding down the brake pedal, shift the selector lever to "D".

In "D" position, the automatic transmission system will select the most suitable gear for running conditions such as normal cruising, hill climbing, hard towing, etc.

Always turn the overdrive switch on for better fuel economy and quieter driving. If the engine coolant temperature is low or when the front drive control lever is in "L4" (low-speed position, four-wheel drive), the transmission will not shift into the overdrive gear even with the overdrive switch on. (See "Four-wheel drive system" in this Chapter for information of the front drive control lever.)

**⚠ CAUTION**

Never put your foot on the accelerator pedal while shifting.

3. Release the parking brake and brake pedal. Depress the accelerator pedal slowly for smooth starting.

(b) Using engine braking

To use engine braking, you can downshift the transmission as follows:

- Turn off the overdrive switch. The "O/D OFF" indicator light will come on and the transmission will downshift to the third gear.
- Shift into the "2" position. The transmission will downshift to the second gear when the vehicle speed drops down to or lower than the following speed, and more powerful engine braking will be obtained.

  Front drive control lever in "H2" or "H4"

  3RZ-FE engine.....105 km/h (65 mph)

  5VZ-FE engine.....114 km/h (70 mph)

  Front drive control lever in "L4"

  3RZ-FE engine.....38 km/h (23 mph)

  5VZ-FE engine.....41 km/h (25 mph)
- Shift into the "L" position. The transmission will downshift to the first gear when the vehicle speed drops down to or lower than the following speed, and maximum engine braking will be applied.

  Front drive control lever in "H2" or "H4"

  3RZ-FE engine.....51 km/h (31 mph)

  5VZ-FE engine.....55 km/h (34 mph)

  Front drive control lever in "L4"

  3RZ-FE engine.....11 km/h (6 mph)

  5VZ-FE engine.....12 km/h (7 mph)

Vehicles with cruise control—When the cruise control is being used, even if you downshift the transmission by turning off the overdrive switch, engine braking is not applied because the cruise control is not cancelled.

For ways to decrease the vehicle speed, see □Cruise control□in this chapter.

**⚠ CAUTION**

Be careful when downshifting on a slippery surface. Abrupt shifting could cause the vehicle to spin or skid.

(c) Using the ”2” and ”L”, positions

The ”2” and ”L” positions are used for strong engine braking as described previously.

With the selector lever in ”2” or ”L”, you can start the vehicle in motion as with the lever in ”D”.

With the selector lever in ”2”, the vehicle will start in the first gear and automatically shift to the second gear.

With the selector lever in ”L”, the transmission is engaged in the first gear.

**NOTICE**

◆Be careful not to overrev the engine. Watch the tachometer to keep engine rpm from going into the red zone. The approximate maximum allowable speed for each position is given above for your reference:

Front drive control lever in ”H2” or ”H4”

3RZ-FE engine
”2”.....111km/h (68 mph)
”L”.....60km/h (37 mph)

5VZ-FE engine
”2”.....118km/h (73 mph)
”L”.....64km/h (40 mph)

Front drive control lever in ”L4”

3RZ-FE engine
”2”.....43km/h (26 mph)
”L”.....23km/h (14 mph)

5VZ-FE engine
”2”.....46km/h (28 mph)
”L”.....25km/h (15 mph)

Do not continue hill climbing or hard towing for a long time in the ”2” or ”L” position. This may cause severe automatic transmission damage from overheating. To prevent such damage, ”D” position should be used in hill climbing or hard towing.

(d) Backing up

1. Bring the vehicle to a complete stop.
2. With the brake pedal held down with your foot, shift the selector lever to the ”R” position.

**NOTICE**

Never shift into reverse while the vehicle is moving.

(e) Parking

1. Bring the vehicle to a complete stop.
2. Pull the parking brake lever fully to securely apply the parking brake.
3. With the brake pedal pressed down, shift the selector lever to the ”P” position.

**⚠ CAUTION**

While the vehicle is moving, never attempt to move the selector lever into "P" position under any circumstances. Serious mechanical damage and loss of vehicle control may result.

(f) Good driving practice

- If the transmission is repeatedly upshifted and downshifted between third gear and overdrive when climbing a gentle slope, the overdrive switch should be turned off. Be sure to turn the switch on immediately afterward.
- When towing a trailer, in order to maintain engine braking efficiency, do not use overdrive.

**⚠ CAUTION**

Always keep your foot on the brake pedal while stopped with the engine running. This prevents the vehicle from creeping.

**NOTICE**

Do not hold the vehicle on an upgrade with the accelerator pedal. It can cause the transmission to overheat. Always use the brake pedal or parking brake.

(g) Rocking your vehicle if stuck

**⚠ CAUTION**

To rock your vehicle if it becomes stuck in snow, mud, sand, etc., first check that there are no objects or people around the vehicle. During the rocking operation the vehicle may suddenly move forward or backward as it becomes unstuck, causing injury or damage to nearby people or objects.

**NOTICE**

If you rock your vehicle, observe the following precautions to prevent damage to the transmission and other parts.

- ◆Do not depress the accelerator pedal while shifting the selector lever or before the transmission is completely shifted to forward or reverse gear.
- ◆Do not race the engine and avoid spinning the wheels.
- ◆If your vehicle remains stuck after rocking the vehicle several times, consider other ways such as towing.

(h) Driving in "PWR"(Power) mode

In the "PWR" mode, the transmission is shifted up and down at a higher vehicle speed than in the "NORM"(Normal) mode and a more powerful acceleration is achieved. To set the "PWR" mode, push in the driving pattern selector button. The "PWR" mode indicator light comes on.

For ordinary driving, Toyota recommends using the "NORM" mode to improve fuel economy.

(i) If you cannot shift the selector lever out of ”P” position

If you cannot shift the selector lever from the ”P” position even though the brake pedal is depressed, use the shift lock override lever. For instructions, see ”If you cannot shift automatic transmission selector lever” in Part 4.

## Manual transmission

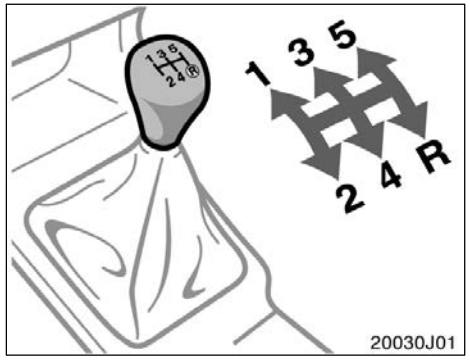


The shift pattern is as shown above.

Press the clutch pedal down fully while shifting, and then release it slowly. Do not rest your foot on the pedal while driving, because it will cause clutch trouble. And do not use the clutch to hold the vehicle when stopped on an uphill grade—use the parking brake.

Recommended shifting speeds

The transmission is fully synchronized and upshifting or downshifting is easy.

For the best compromise between fuel economy and vehicle performance, you should upshift or downshift at the following speeds:

3RZ-FE engine

Upshifting

| gear | km/h (mph) |
|---|---|
| 1 to 2 | 24 (15) |
| 2 to 3 | 40 (25)/58 (36)* |
| 3 to 4 | 64 (40)/72 (45)* |
| 4 to 5 | 72 (45)/85 (53)* |

Downshifting

| gear | km/h (mph) |
|---|---|
| 2 to 1 | 24 (15) |
| 3 to 2 | 40 (25) |
| 4 to 3 | 64 (40) |
| 5 to 4 | 72 (45) |

*: Applicable under heavy acceleration conditions.

5VZ-FE engine

| gear | km/h (mph) |
|---|---|
| 1 to 2 or 2 to 1 | 24 (15) |
| 2 to 3 or 3 to 2 | 40 (25) |
| 3 to 4 or 4 to 3 | 64 (40) |
| 4 to 5 or 5 to 4 | 72 (45) |

Downshift to the appropriate gear if acceleration is needed when you are cruising below the above downshifting speeds.

Upshifting too soon or downshifting too late will cause lugging and, possibly, pinging. Regularly revving the engine to maximum speed in each gear will cause excessive engine wear and high fuel consumption.

Maximum allowable speeds

To get on a highway or to pass slower traffic, maximum acceleration may be necessary. Make sure you observe the following maximum allowable speeds in each gear:

Two-wheel drive models

| gear | km/h (mph) |
|---|---|
| 1 | 48 ( 29) |
| 2 | 90 ( 55) |
| 3 | 139 ( 86) |
| 4 | 165 (102) |

Four-wheel drive models

3RZ-FE engine

| gear | km/h (mph) | |
|---|---|---|
| | "H2" and "H4" | "L4" |
| 1 | 45 ( 28) | 17 (11) |
| 2 | 84 ( 52) | 32 (20) |
| 3 | 130 ( 81) | 50 (31) |
| 4 | 165 (102) | 64 (39) |

5VZ-FE engine

| gear | km/h (mph) | |
|---|---|---|
| | "H2" and "H4" | "L4" |
| 1 | 48 ( 29) | 18 (11) |
| 2 | 89 ( 55) | 34 (21) |
| 3 | 127 ( 79) | 49 (31) |
| 4 | 165 (102) | 64 (39) |

**NOTICE**

Do not downshift if you are going faster than the maximum allowable speed for the next lower gear.

Good driving practice

- If it is difficult to shift into reverse, put the transmission in neutral, release the clutch pedal momentarily, and then try again.
- When towing a trailer, in order to maintain engine braking efficiency, do not use the fifth gear.

**⚠ CAUTION**

Be careful when downshifting on a slippery surface. Abrupt shifting could cause the vehicle to spin or skid.

**NOTICE**

Make sure the vehicle is completely stopped before shifting into reverse.

## Four-wheel drive system—
## (a) Front drive control (lever type)

Use the front drive control lever to select the following transfer modes.

”H2” (high speed position, two-wheel drive): Lever at ”H2”
Use this for normal driving on dry hard-surfaced roads. This position gives greater economy, quietest ride and least wear.

”H4” (high speed position, four-wheel drive): Lever at ”H4”
Use this for normal driving on wet, icy or snow-covered roads. This position provides greater traction than two-wheel drive.

”N” (neutral position): Lever at ”N”
No power is delivered to the wheels. The vehicle must be stopped.

”L4” (low speed position, four-wheel drive): Lever at ”L4”
Use this for maximum power and traction. Use ”L4” for climbing or descending steep hills, off-road driving, and hard pulling in sand, mud or deep snow.

The four-wheel drive indicator light comes on when the ”H4”, ”N” or ”L4” mode is selected.

See ”(c) Shifting procedure (lever type)” for further instructions.

## (a) Front drive control (lever/button type)

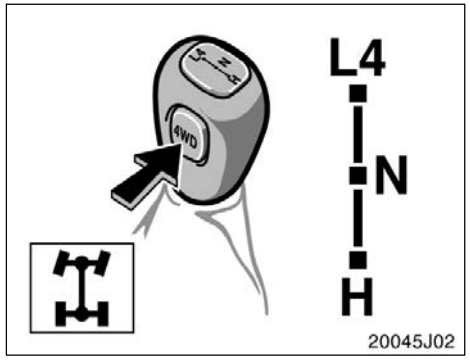


Use the front drive control lever and ”4WD” button to select the following transfer modes.

”H2” (high speed position, two-wheel drive): Lever a ”H”, ”4WD” button left out

Use this for normal driving on dry hard-surfaced roads. This position gives greater economy, quietest ride and least wear.

”H4” (high speed position, four-wheel drive): Lever at ”H”, ”4WD” button pushed in
Use this for normal driving on wet, icy or snow-covered roads. This position provides greater traction than two-wheel drive.

”N” (neutral position): Lever at ”N”
No power is delivered to the wheels. The vehicle must be stopped.

”L4” (low speed position, four-wheel drive): Lever at ”L4”
Use this for maximum power and traction. Use ”L4” for climbing or descending steep hills, off-road driving, and hard pulling in sand, mud or deep snow.

The four-wheel drive indicator light comes on when the ”H4”, ”N” or ”L4” mode is selected.

See ”(c) Shifting procedure (lever/button type)” for further instructions.

## (b) A.D.D. (automatic disconnecting differential)

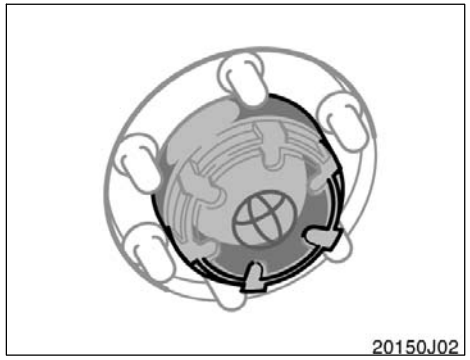


Steel wheels

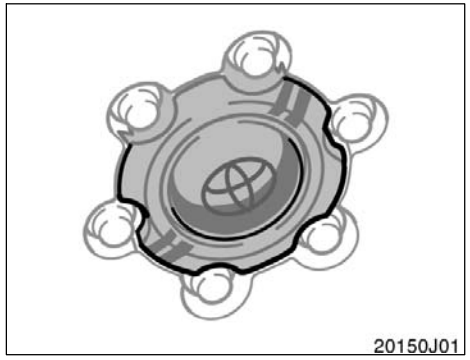


Aluminum wheels

The A.D.D. can be engaged or disengaged by the shifting operations described in ”(c) Shifting procedure”.

You should drive in four-wheel drive for at least 16 km (10 miles) each month. This will assure that the front drive components are lubricated.

## (c) Shifting procedure (lever type with manual transmission)

SHIFTING BETWEEN ”H2” AND ”H4”

To shift from ”H2” to ”H4”, move the front drive control lever.

This can be done when the vehicle is stopped, or moving straight ahead at speeds of 40km/h (25mph) or less. You need not depress the clutch pedal. If you have trouble shifting, depress or release the accelerator pedal momentarily while pushing the front drive control lever.

**⚠ CAUTION**

Never move the front drive control lever if wheels are slipping. Stop the slipping or spinning before shifting.

To shift from ”H4” to ”H2”, simply move the front drive control lever.

This can be done at any vehicle speed. You need not depress the clutch pedal.

If the indicator light does not go off when you shift the transfer into ”H2”, drive straight ahead while accelerating or decelerating, or drive in reverse.

With A.D.D.

To shift from ”H2” to ”H4”, reduce your speed to less than 80 km/h (50 mph) and move the front drive control lever. You need not depress the clutch pedal.

If you have trouble shifting in cold weather, reduce your speed or stop the vehicle and reshift.

**⚠ CAUTION**

Never move the front drive control lever if wheels are slipping. Stop the slipping or spinning before shifting.

To shift from ”H4” to ”H2”, simply move the front drive control lever.

This can be done at any vehicle speed. You need not depress the clutch pedal.

If the indicator light does not go off when you shift the transfer into ”H2”, drive straight ahead while accelerating or decelerating, or drive in reverse.

SHIFTING BETWEEN ”H4” AND ”L4”

To shift from ”H4” to ”L4, stop the vehicle or reduce your speed to less than 8 km/h (5 mph). With your foot off the accelerator pedal, depress the clutch pedal and move the front drive control lever.

To shift from ”L4” to ”H4”, depress the clutch pedal and move the front drive control lever.

This can be done at any vehicle speed.

### (c) Shifting procedure (lever type with automatic transmission)

SHIFTING BETWEEN ”H2” AND ”H4”

To shift from ”H2” to ”H4”, move the front drive control lever.

This can be done when the vehicle is stopped, or moving straight ahead at speeds of 40 km/h (25 mph) or less. If you have trouble shifting, depress or release the accelerator pedal momentarily while pushing the front drive control lever.

> ⚠ CAUTION
>
> Never move the front drive control lever if wheels are slipping. Stop the slipping or spinning before shifting.

To shift from ”H4” to ”H2”, simply move the front drive control lever.

This can be done at any vehicle speed.

If the indicator light does not go off when you shift the transfer into ”H2”, drive straight ahead while accelerating or decelerating, or drive in reverse.

With A.D.D.

To shift from ”H2” to ”H4”, reduce your speed to less than 80 km/h (50 mph) and move the front drive control lever.

If you have trouble shifting in cold weather, reduce your speed or stop the vehicle and reshift.

> ⚠ CAUTION
>
> Never move the front drive control lever if wheels are slipping. Stop the slipping or spinning before shifting.

To shift from ”H4” to ”H2”, simply move the front drive control lever.

This can be done at any vehicle speed.

If the indicator light does not go off when you shift the transfer into ”H2”, drive straight ahead while accelerating or decelerating, or drive in reverse.

SHIFTING BETWEEN ”H4” AND”L4”

To shift between ”H4” and ”L4”,stop the vehicle and put the transmission in ”N”. With your foot holding down the brake pedal, move the front drive control lever.

### (c) Shifting procedure (lever/button type)

SHIFTING BETWEEN ”H2” AND ”H4”

To shift from ”H2” to ”H4”, reduce your speed to less than 100 km/h (62 mph) and push in the ”4WD” button.

If the indicator light does not come on when you push in the ”4WD” button, drive straight ahead while accelerating or decelerating.

If the indicator light flashes and the buzzer sounds when you push in the ”4WD” button, reduce your speed or stop the vehicle and reset.

> ⚠ CAUTION
>
> Never push the ”4WD” button if wheels are slipping. Stop the slipping or spinning before shifting.

To shift from ”H4” to ”H2”, push the ”4WD” button again to turn it off.

This can be done at any vehicle speed.

If the indicator light does not go off when you shift the transfer into ”H2”, drive straight ahead while accelerating or decelerating, or drive in reverse.

SHIFTING BETWEEN ”H2” OR ”H4” AND ”L4”

To shift from ”H2” or ”H4” to ”L4”, stop the vehicle and put the transmission in ”N”. With your foot holding down the brake pedal, move the front drive control lever.

To shift from ”L4” to ”H2” or ”H4”, stop the vehicle and put the transmission in ”N”. With your foot holding down the brake pedal, move the front drive control lever. When the ”4WD” button is pushed in, the transfer shifts into ”H4”; when the button is left out, the transfer shifts into ”H2”.

If the indicator light does not go off when you shift the transfer into ”H2”, drive straight ahead while accelerating or decelerating, or drive in reverse.

## Rear differential lock system

The rear differential lock system is provided for use only when wheel spinning occurs in a ditch or on a slippery or ragged surface.

This differential lock system is effective in case one of the rear wheels is spinning.

Before using the rear differential lock system, first shift the front drive control into ”L4” to see if it works. If this has no effect, additionally use the rear differential lock system.

**⚠ CAUTION**

Do not use the rear differential lock in the conditions other than above. Large steering effort and careful cornering control will be required.

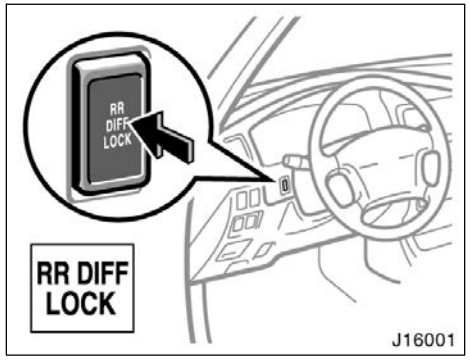


To lock the rear differential, push the switch.

Be sure to stop the wheels before locking the differential.

Vehicles with manual transmission—For easy locking, depress the clutch pedal, push the lock switch and slowly release the clutch pedal.

The indicator light will blink when the switch is turned on. Wait a few seconds for the system to complete operation. After the differential is locked, the light will stop blinking and remain on.

The anti-lock brake system does not operate when the rear differential is locked. It is normal operation for the "ABS" warning light to be on at this time.

**⚠ CAUTION**

- Do not lock the differential until the wheels have stopped spinning. Otherwise, the vehicle may move in an unexpected direction when the differential lock is engaged, resulting in an accident. This may also lead to possible damage to differential lock component parts.
- Do not drive over 8 km/h (5 mph) when the differential is locked.

To unlock the differential, push the switch once again.

Unlock the differential as soon as the vehicle moves out.

For easy unlocking, slightly turn the steering wheel in either direction while the vehicle is in motion.

When the differential lock is disengaged, the indicator light will go out.

The differential will also unlock if you shift the front drive control lever out of "L4". Never forget to turn off the switch after using this feature.

To check the indicator bulb, turn the ignition key to the "ON" position, but do not start the engine.

**⚠ CAUTION**

Do not keep driving with the differential lock switch on.

## Parking brake

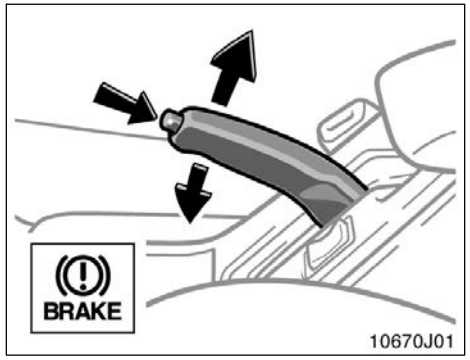


When parking, firmly apply the parking brake to avoid inadvertent creeping.

To set: Pull up the lever. For better holding power, first depress the brake pedal and hold it while setting the brake.
To release: Pull up the lever slightly, press the thumb button, and lower.

To remind you that the parking brake is set, the parking brake reminder light in the instrument panel remains on until you release the parking brake.

**⚠ CAUTION**

Before driving, be sure the parking brake is fully released and the parking brake reminder light is off.

## Cruise control

The cruise control allows you to cruise the vehicle at a desired speed over 40 km/h (25 mph) even with your foot off the accelerator pedal.

Your cruising speed can be maintained up or down grades within the limits of engine performance, although a slight speed change may occur when driving up or down the grades. On steeper hills, a greater speed change will occur so it is better to drive without the cruise control.

**⚠ CAUTION**

- To help maintain maximum control of your vehicle, do not use the cruise control when driving in heavy or varying traffic, or on slippery (rainy, icy or snow-covered) or winding roads.
- Avoid vehicle speed increases when driving downhill. If the vehicle speed is too fast in relation to the cruise control set speed, cancel the cruise control then downshift the transmission to use engine braking to slow down.

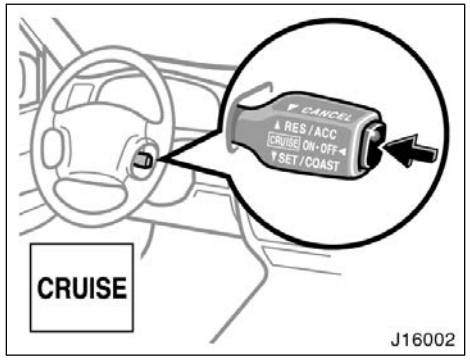


TURNING ON THE SYSTEM

To operate the cruise control, press the "CRUISE ON-OFF" button. This turns the system on. The indicator light in the instrument panel shows that you can now set the vehicle at a desired cruising speed. Another press will turn the system completely off.

> ⚠ CAUTION
>
> To avoid accidental cruise control engagement, keep the "CRUISE ON-OFF" switch off when not using the cruise control.

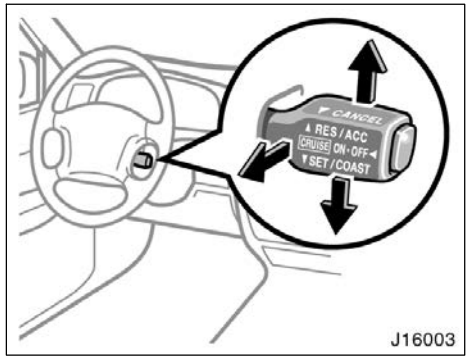


SETTING AT A DESIRED SPEED

On vehicles with automatic transmission, the transmission must be in "D" before you set the cruise control speed.

Bring your vehicle to the desired speed, push the lever down in the "SET/COAST" direction and release it. This sets the vehicle at that speed. If the speed is not satisfactory, tap the lever up for a faster speed, or tap it down for a slower speed. Each tap changes the set speed by 1.6 km/h (1.0 mph). You can now take your foot off the accelerator pedal.

If you need acceleration—for example, when passing—depress the accelerator pedal enough for the vehicle to exceed the set speed. When you release it, the vehicle will return to the speed set prior to the acceleration.

> ⚠ CAUTION
>
> For manual transmission:
>
> While driving with the cruise control on, do not shift to neutral without depressing the clutch pedal, as this may cause engine racing or overreving.

CANCELLING THE PRESET SPEED

You can cancel the preset speed by:

a. Pulling the lever in the "CANCEL" direction and releasing it.
b. Depressing the brake pedal.
c. Depressing the clutch pedal (manual transmission).

If the vehicle speed falls below about 40 km/h (25 mph), the preset speed will automatically cancel out.

If the vehicle speed drops 16 km/h (10 mph) below the preset speed, the preset speed will also automatically cancel out.

If the preset speed automatically cancels out other than for the above cases, have your vehicle checked by your Toyota dealer at the earliest opportunity.

RESETTING AT A FASTER SPEED

Push the lever up in the ”RES/ACC” direction and hold it. Release the lever when the desired speed is attained. While the lever is held up, the vehicle will gradually gain speed.

However, a faster way to reset is to accelerate the vehicle and then push the lever down in the ”SET/COAST” direction.

RESETTING AT A SLOWER SPEED

Push the lever down in the ”SET/COAST” direction and hold it. Release the lever when the desired speed is attained. While the lever is held down, the vehicle speed will gradually decrease.

However, a faster way to reset is to depress the brake pedal and then push the lever down in the ”SET/COAST” direction.

On vehicles with automatic transmission, even if you turn off the overdrive switch, with the cruise control on, engine braking will not be applied because the cruise control is not cancelled. To decrease the vehicle speed, reset to a slower speed with the cruise control lever or depress the brake pedal. If you use the brake pedal, cruise control is cancelled.

RESUMING THE PRESET SPEED

If the preset speed is cancelled by pulling the control lever or by depressing the brake pedal or clutch pedal, pushing the lever up in the ”RES/ACC” direction will restore the speed set prior to cancellation.

However, once the vehicle speed falls below about 40 km/h (25 mph), the preset speed will not be resumed.

CRUISE CONTROL FAILURE WARNING

If the ”CRUISE” indicator light in the instrument cluster flashes when using the cruise control, press the ”CRUISE ON–OFF” button to turn the system off and then press it again to turn it on.

If any of the following conditions then occurs, there is some trouble in the cruise control system.

- The indicator light does not come on.
- The indicator light flashes again.
- The indicator light goes out after it comes on.

If this is the case, contact your Toyota dealer and have your vehicle inspected.

## Clutch start cancel switch (four-wheel drive models with manual transmission)

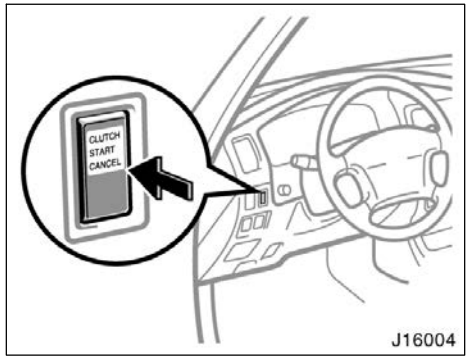


To crank the engine without depressing the clutch pedal, push the switch with the ignition on.

The switch stays on as long as the ignition is on. And it will automatically turn off when the ignition is off.

This switch cancels the clutch start system, which is designed to keep the starter motor from operating if the clutch pedal is not depressed all the way down.

The switch allows the vehicle to be driven out of difficult situations by cranking the engine with the clutch engaged.

Never use the switch for normal engine starting. Be sure to follow the starting procedure instructed in ”How to start the engine” in Part 3.

# Part 1
# OPERATION OF INSTRUMENTS AND CONTROLS—

## Chapter 1-7
## Car audio system and Air conditioning system

Car audio system
- Reference
- Using your audio system: some basics
- Using your audio system: controls and features
- Car audio system operating hints

Air conditioning system
- Controls
- Air flow selector settings
- Operating tips
- Instrument panel vents
- Rear heater system

### Car audio system— —Reference

Type 1: AM□FM ETR radio/cassette player/ compact disc auto changer controller

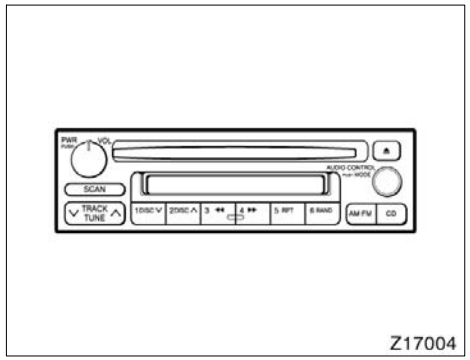


Type 2: AM□FM ETR radio/compact disc player/compact disc auto changer controller

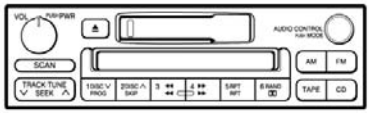


Z17005

Type 3: AM□FM ETR radio/cassette player/compact disc auto changer controller

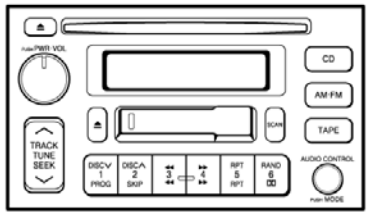


Z17006

Type 4: AM□FM ETR radio/cassette player/compact disc player/compact disc auto changer controller

## —Using your audio system: some basics

This section describes some of the basic features on Toyota audio systems. Some information may not pertain to your system.

Your audio system works when the ignition key is in the ”ACC” or ”ON” position.

### TURNING THE SYSTEM ON AND OFF

Push ”PWR□VOL”, ”PWR/VOL” or ”VOL/PWR” to turn the audio system on and off.

Push ”AM”, ”FM”, ”AM□FM”, ”TAPE” or ”CD” to turn on that function without pushing ”PWR□VOL”, ”PWR/VOL” or ”VOL/PWR”.

You can turn on each player by inserting a cassette tape or compact disc.

You can turn off each player by ejecting the cassette tape or compact disc. If the audio system was previously off, then the entire audio system will be turned off when you eject the cassette tape or compact disc. If the another function was previously playing, it will come on again.

### SWITCHING BETWEEN FUNCTIONS

Push ”AM”, ”FM”, ”AM□FM” , ”TAPE” or ”CD” if the system is already on but you want to switch from one function to another.

### TONE AND BALANCE

For details about your system’s tone and balance controls, see the description of your own system.

#### Tone

How good an audio program sounds to you is largely determined by the mix of the treble, midrange, and bass levels. In fact, different kinds of music and vocal programs usually sound better with different mixes of treble, midrange, and bass.

#### Balance

A good balance of the left and right stereo channels and of the front and rear sound levels is also important.

Keep in mind that if you are listening to a stereo recording or broadcast, changing the right/left balance will increase the volume of one group of sounds while decreasing the volume of another.

## YOUR RADIO ANTENNA

To lower a power antenna, turn off the audio system by pushing "PWR□VOL", "PWR/VOL" or "VOL/PWR", or turn the ignition key to "LOCK".

On some models, the power antenna automatically retracts when the radio mode is switched off to turn on the cassette tape player.

| NOTICE |
| --- |
| To prevent damage to the antenna, make sure it is retracted before driving your Toyota through an automatic car wash. On vehicles with detachable antenna, remove the antenna before using an automatic car wash. |

## YOUR CASSETTE PLAYER

When you insert a cassette, the exposed tape should be to the right.

| NOTICE |
| --- |
| Do not oil any part of the player and do not insert anything other than cassette tapes into the slot, or the tape player may be damaged. |

## YOUR COMPACT DISC PLAYER

When you insert a disc, gently push it in with the label side up. (The player will automatically eject a disc if the label side is down.) The compact disc player will play from track 1 through the end of the disc. Then it will play from track 1 again.

| NOTICE |
| --- |
| Never try to disassemble or oil any part of the compact disc player. Do not insert anything except a compact disc into the slot. |

### 8 cm (3 in.) compact disc singles

Your compact disc player does not need an adaptor to play compact disc singles. Compact disc singles are about 8 cm (3 in.) in diameter-smaller than standard discs.

After you eject a compact disc single, do not insert a standard 12 cm (5 in.) disc until "DISC" disappears from the display.

| NOTICE |
| --- |
| Do not use an adaptor for compact disc singles—it could cause tracking errors or interfere with the ejection of compact discs. |

## —Using your audio system: controls and features

▶Type 1

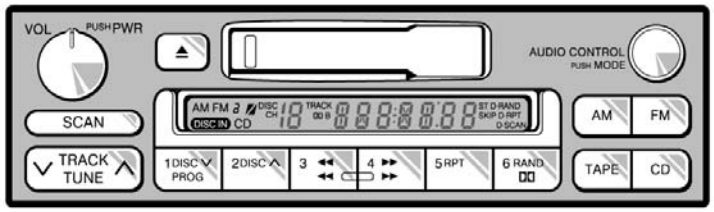


Z17009

Details of specific buttons, controls, and features are described in the alphabetical listing that follows.

1 2 3 4 5 6 (Preset buttons)

These buttons are used to preset and tune in radio stations.

To preset a station to a button: Tune in the desired station (see ”TUNE” button). Push and hold down the button until you hear a beep—this will set the station to the button. The button number will appear on the display.

To tune in to a preset station: Push the button for the station you want. The button number and station frequency will appear on the display.

These systems can store one AM and two FM stations for each button (The display will show ”AM”, ”FM1” or ”FM2” when you push ”AM” or ”FM”).

⏏ (Eject button)

Push this button to eject a cassette.

After you turn the ignition to ”LOCK”, you will be able to eject a cassette but you will not be able to reinsert it.

◀◀/▶▶ (Reverse/Fast forward buttons)

Cassette Player

Push the fast forward button to fast forward a cassette tape. ”FF” will appear on the display. Push the reverse button to rewind a tape. ”REW” will appear on the display.

To stop the tape while it is fast forwarding, push the fast forward button or ”TAPE”; to stop the tape while it is rewinding, push the reverse button or ”TAPE”.

If a tape side rewinds completely, the cassette player will stop and then play that same side. If a tape fast forwards completely, the cassette player will play the other side of the tape, using the auto-reverse feature.

Compact Disc Player

If you want to fast forward or reverse through a compact disc track, push and hold in the fast forward or reverse button. When you release the button, the compact disc player will resume playing.

AM

Push ”AM” to switch the AM band. ”AM” will appear on the display.

If the audio system is off, you can turn on the radio by pushing ”AM”. Also, push ”AM” to switch from cassette or compact disc operation to radio operation.

AUDIO CONTROL / MODE

Manual tone adjustment function—

This knob is used to adjust the tone manually.

For low-pitch tone adjustment, push ”AUDIO CONTROL / MODE” repeatedly until ”BAS” appears on the display. Then turn the knob to suit your preference.

The display will show the range from ”BAS -5” to ”BAS 5”.

For high-pitch tone adjustment, push ”AUDIO CONTROL / MODE” repeatedly until ”TRE” appears on the display. Then turn the knob to suit your preference.

The display will show the range from ”TRE -5” to ”TRE 5”.

Sound balance adjustment function—

This knob is also to adjust the sound balance between the front and rear, and the right and left speakers.

For front/rear adjustment, push ”AUDIO CONTROL / MODE” repeatedly until ”FAd” appears on the display. Then turn the knob to adjust the front/rear balance.

The display will show the range from ”FAd F7” to ”FAd R7”.

For left/right adjustment, push ”AUDIO CONTROL / MODE” repeatedly until ”BAL” appears on the display. Then turn the knob to adjust the left/right balance.

The display will show the range from ”BAL L7” to ”BAL R7”.

CD (Compact Disc)

Push ”CD” to switch from radio or cassette operation to compact disc operation. If the audio system is off, you can turn on the compact disc player by pushing ”CD”. In both cases, a disc must already be loaded in the player.

When the audio is set into compact disc operation, the display shows the track or, track and disc number currently being played. Each time you push ”CD”, the system changes between single disc player and automatic changer.

Your audio system shows six different display if the player malfunctions.

If ”WAIT” appears on the display, it indicates inside the player unit may be too hot due to the very high ambient temperature. Remove the disc or magazine from the player and allow the player to cool down.

If ”Err 1” appears on the display, it indicates the disc is dirty, damaged, or it was inserted up-side down. Clean the disc or insert it correctly.

If ”Err 2” appears on the display, it indicates no disc is loaded inside the magazine, insert a disc.

If ”Err 3” or ”Err 4” on the display, it indicates there is a trouble inside the system. Eject the disc or magazine. Set the disc or magazine again.

If ”OPEn” appears on the display, it indicates the compact disc auto changer lid is open. Close the compact disc auto changer lid.

If the malfunction is not recovered, take your vehicle to your Toyota dealer.

DISC ∨∧

Compact disc auto changer only—

By using this button, you can select a disc you wish to listen to.

Push the either side of the button until the number of the disc you want to listen to appears on the display.

Dolby® DD B NR*

If you are listening to a tape that was recorded with Dolby® B Noise Reduction, push the button marked with the double-D symbol. The double-D symbol will appear on the display. Push the button again to turn off Dolby® B NR.

The Dolby NR mode reduces tape noise by about 10 dB. For best sound reproduction, play your tapes with this button on or off according to the mode used for recording the tape.

*: Dolby noise reduction manufactured under license from Dolby Laboratories Licensing Corporation. "DOLBY" and the double D symbol DD are trademarks of Dolby Laboratories Licensing Corporation.

FM

Push "FM" to switch the FM band. "FM1" or "FM2" will appear on the display. This system allow you to set twelve FM stations, two for each button.

If the audio system is off, you can turn on the radio by pushing "FM". Also, push "FM" to switch from cassette or compact disc operation to radio operation.

PROG (Program)

Push "PROG" to select the other side of a cassette tape. The display indicates which side is currently selected ("◢ " indicates top side, "◤ " indicates bottom side).

Auto-reverse feature: After the cassette player reaches the end of a tape side, it automatically reverses and begins to play the other side. This is true whether the cassette was playing or fast forwarding.

RAND (Random)

There are two random features—you can either listen to the tracks on all the compact discs in the magazine in random order, or only listen to the tracks on a specific compact disc in random order.

Random playing for the tracks on a disc: Quickly push and release "RAND". "RAND" will appear on the display and the disc you are listening to in random order. If you hear a beep, you held the button too long, and the player will play all the tracks in the magazine in random order. To turn off the random feature, push the "RAND" a second time.

Compact disc auto changer only—

Random playing for all the tracks in the magazine:
Push and hold "RAND" until you hear a beep. "D·RAND" will appear on the display and the player will perform all the tracks on all the discs in the magazine in random order. To turn off the random feature, push "RAND" a second time.

RPT (Repeat)

There are two repeat features—you can either replay a disc track or a whole compact disc.

Repeating a track:
Quickly push and release ”RPT” while the track is playing. ”RPT” will appear on the display. If you hear a beep, you held the button too long, and the player will repeat the whole disc. When the track ends, it will automatically be replayed. This process will be continued until you push the button again to turn off the repeat feature.

Compact disc auto changer only—

Repeating a disc:
Push and hold ”RPT” until you hear a beep. ”D·RPT” will appear on the display. The player will repeat all the tracks on the disc you are listening to. When the disc ends, the player will automatically go back to the top track of the disc and replay. This process will be continued until you push the button again to turn off the repeat feature.

SCAN

Radio

You can either scan all the frequencies on a band or scan only the preset stations for that band.

To scan all the frequencies:
Quickly push and release ”SCAN”. If you hear a beep, you held the button too long, and the radio will scan the preset stations. The radio will find the next station up the station band, stay there for a few seconds, and then scan again. To select a station, push ”SCAN” a second time.

To scan the preset stations:
Push and hold ”SCAN” until you hear a beep. The radio will tune in the next preset station up the band, stay there for a few seconds, and then move to the next preset station. To select a station, push ”SCAN” a second time.

Compact disc player

There are two scan features—you can either scan the tracks on a specific disc or scan the first tracks of all the discs in the magazine.

Scanning for the tracks on a disc:
Quickly push and release ”SCAN”. ”SCAN” will appear on the display and the player will scan all the tracks on the disc you are listening to. If you hear a beep, you held the button too long, and the player will scan the first tracks of all the discs in the magazine. To select a track, push the ”SCAN” a second time. If the player scanned all the tracks on the disc, it will stop scanning.

Compact disc auto changer only—

Scanning for the first tracks of all the discs in the magazine:
Push and hold ”SCAN” until you hear a beep. ”D·SCAN” will appear on the display and the player will perform the first track of the next disc. To select a disc, push the ”SCAN” a second time. If the player has scanned all the discs, it will stop scanning.

ST (Stereo reception) display

Your radio automatically changes to stereo reception when a stereo broadcast is received. ”ST” appears on the display. If the signal becomes weak, the radio reduces the amount of channel separation to prevent the weak signal from creating noise. If the signal becomes extremely weak, the radio switches from stereo to mono reception.

TAPE

Push ”TAPE” to switch from radio or compact disc operation to cassette operation. If the audio system is off, you can turn on the cassette player by pushing ”TAPE”. In both cases, a cassette must already be loaded in the player.

TRACK (Track up/down button): Compact disc player

By using this button, you can skip up or down to a different track.

Push either side of the track button until the number of the track you want to listen to appears on the display. If you want to return the beginning of the current track, push the down side of the button one time, quickly.

TUNE

Tuning

Your Toyota has an electronic tuning radio (ETR). Push and release the ”∧” (up) or ”∨” (down) side of ”TUNE” to step up or down the station band. (If you hear a beep, you held the button too long and the radio will go into the seek mode.)

Seeking

In the seek mode, the radio finds and plays the next station up or down the station band.

To seek a station, push and hold the ”∧” or ”∨” side of ”TUNE” until you hear a beep. Do this again to find another station.

VOL/PWR (Volume/Power)

Push ”VOL/PWR” to turn the audio system on and off. Turn ”VOL/PWR” to adjust the volume.

▶Type 2

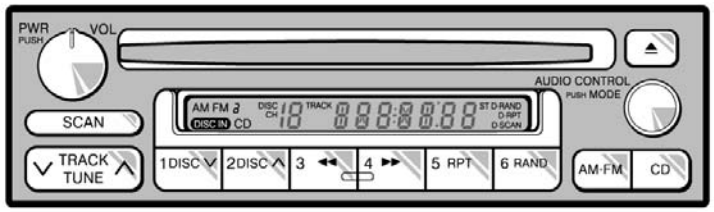


Z17010

Details of specific buttons, controls, and features are described in the alphabetical listing that follows.

1 2 3 4 5 6 (Preset buttons)

These buttons are used to preset and tune in radio stations.

To preset a station to a button: Tune in the desired station (see "TUNE" button). Push and hold down the button until you hear a beep—this will set the station to the button. The button number will appear on the display.

To tune in to a preset station: Push the button for the station you want. The button number and station frequency will appear on the display.

These systems can store one AM and two FM stations for each button (The display will show "AM", "FM1" or "FM2" when you push "AM·FM").

⏏ (Eject button)

Push this button to eject a compact disc.

After you turn the ignition to "LOCK", you will be able to eject a disc but you will not be able to reinsert it.

◀◀/▶▶ (Reverse/Fast forward buttons)

If you want to fast forward or reverse through a compact disc track, push and hold in the fast forward or reverse button. When you release the button, the compact disc player will resume playing.

AM□FM

Push "AM□FM" to switch between the AM and FM bands. "AM", "FM1" or "FM2" will appear on the display. These systems allow you to set twelve FM stations, two for each button.

If the audio system is off, you can turn on the radio by pushing "AM□FM". Also, push "AM□FM" to switch from compact disc operation to radio operation.

AUDIO CONTROL / MODE

Manual tone adjustment function—

This knob is used to adjust the tone manually.

For low-pitch tone adjustment, push "AUDIO CONTROL / MODE" repeatedly until "BAS" appears on the display. Then turn the knob to suit your preference.

The display will show the range from "BAS -5" to "BAS 5".

With middle-pitch tone—
For middle-pitch tone adjustment, push "AUDIO CONTROL / MODE" repeatedly until "MId" appears on the display. Then turn the knob to suit your preference.

The display will show the range from "MId -5" to "MId 5".

For high-pitch tone adjustment, push "AUDIO CONTROL / MODE" repeatedly until "TRE" appears on the display. Then turn the knob to suit your preference.

The display will show the range from "TRE -5" to "TRE 5".

Sound balance adjustment function—

This knob is also to adjust the sound balance between the front and rear, and the right and left speakers.

For front/rear adjustment, push "AUDIO CONTROL / MODE" repeatedly until "FAd" appears on the display. Then turn the knob to adjust the front/rear balance.

The display will show the range from "FAd F7" to "FAd R7".

For left/right adjustment, push "AUDIO CONTROL / MODE" repeatedly until "BAL" appears on the display. Then turn the knob to adjust the left/right balance.

The display will show the range from "BAL L7" to "BAL R7".

CD (Compact Disc)

Push "CD" to switch from radio operation to compact disc operation. If the audio system is off, you can turn on the compact disc player by pushing "CD". In both cases, a disc must already be loaded in the player.

When the audio is set into compact disc operation, the display shows the track or, track and disc number currently being played. Each time you push "CD", the system changes between built-in single disc player and automatic changer.

Your audio system shows six different display if the player malfunctions.

If "WAIT" appears on the display, it indicates inside the player unit may be too hot due to the very high ambient temperature. Remove the disc or magazine from the player and allow the player to cool down.

If "Err 1" appears on the display, it indicates the disc is dirty, damaged, or it was inserted up-side down. Clean the disc or insert it correctly.

If "Err 2" appears on the display, it indicates no disc is loaded inside the magazine, insert a disc.

If "Err 3" or "Err 4" on the display, it indicates there is a trouble inside the system. Eject the disc or magazine. Set the disc or magazine again.

If "OPEn" appears on the display, it indicates the compact disc auto changer lid is open. Close the compact disc auto changer lid.

If the malfunction is not recovered, take your vehicle to your Toyota dealer.

DISC ∨∧

Compact disc auto changer only—

By using this button, you can select a disc you wish to listen to.

Push the either side of the button until the number of the disc you want to listen to appears on the display.

PWR/VOL (Power/Volume)

Push "PWR/VOL" to turn the audio system on and off. Turn "PWR/VOL" to adjust the volume.

RAND (Random)

There are two random features—you can either listen to the tracks on all the compact discs in the magazine in random order, or only listen to the tracks on a specific compact disc in random order.

Random playing for the tracks on a disc:
Quickly push and release ”RAND”. ”RAND” will appear on the display and the disc you are listening to in random order. If you hear a beep, you held the button too long, and the player will play all the tracks in the magazine in random order. To turn off the random feature, push the ”RAND” a second time.

Compact disc auto changer only—

Random playing for all the tracks in the magazine:
Push and hold ”RAND” until you hear a beep. ”D·RAND” will appear on the display and the player will perform all the tracks on all the discs in the magazine in random order. To turn off the random feature, push ”RAND” a second time.

RPT (Repeat)

There are two repeat features—you can either replay a disc track or a whole compact disc.

Repeating a track:
Quickly push and release ”RPT” while the track is playing. ”RPT” will appear on the display. If you hear a beep, you held the button too long, and the player will repeat the whole disc. When the track ends, it will automatically be replayed. This process will be continued until you push the button again to turn off the repeat feature.

Compact disc auto changer only—

Repeating a disc:
Push and hold ”RPT” until you hear a beep. ”D·RPT” will appear on the display. The player will repeat all the tracks on the disc you are listening to. When the disc ends, the player will automatically go back to the top track of the disc and replay. This process will be continued until you push the button again to turn off the repeat feature.

SCAN

Radio

You can either scan all the frequencies on a band or scan only the preset stations for that band.

To scan all the frequencies:
Quickly push and release ”SCAN”. If you hear a beep, you held the button too long, and the radio will scan the preset stations. The radio will find the next station up the station band, stay there for a few seconds, and then scan again. To select a station, push ”SCAN” a second time.

To scan the preset stations:
Push and hold ”SCAN” until you hear a beep. The radio will tune in the next preset station up the band, stay there for a few seconds, and then move to the next preset station. To select a station, push ”SCAN” a second time.

Compact disc player

There are two scan features—you can either scan the tracks on a specific disc or scan the first tracks of all the discs in the magazine.

Scanning for the tracks on a disc:
Quickly push and release ”SCAN”. ”SCAN” will appear on the display and the player will scan all the tracks on the disc you are listening to. If you hear a beep, you held the button too long, and the player will scan the first tracks of all the discs in the magazine. To select a track, push the ”SCAN” a second time. If the player scanned all the tracks on the disc, it will stop scanning.

Compact disc auto changer only—

Scanning for the first tracks of all the discs in the magazine:
Push and hold ”SCAN” until you hear a beep. ”D·SCAN” will appear on the display and the player will perform the first track of the next disc. To select a disc, push the ”SCAN” a second time. If the player has scanned all the discs, it will stop scanning.

ST (Stereo reception) display

Your radio automatically changes to stereo reception when a stereo broadcast is received. ”ST” appears on the display. If the signal becomes weak, the radio reduces the amount of channel separation to prevent the weak signal from creating noise. If the signal becomes extremely weak, the radio switches from stereo to mono reception.

TRACK (Track up/down button): Compact disc player

By using this button, you can skip up or down to a different track.

Push either side of the track button until the number of the track you want to listen to appears on the display. If you want to return the beginning of the current track, push the down side of the button one time, quickly.

TUNE (Tuning)

Tuning

Your Toyota has an electronic tuning radio (ETR). Push and release the ”∧” (up) or ”∨” (down) side of ”TUNE” to step up or down the station band. (If you hear a beep, you held the button too long and the radio will go into the seek mode.)

Seeking

In the seek mode, the radio finds and plays the next station up or down the station band.

To seek a station, push and hold the ”∧” or ”∨” side of ”TUNE” until you hear a beep. Do this again to find another station.

▶Type 3

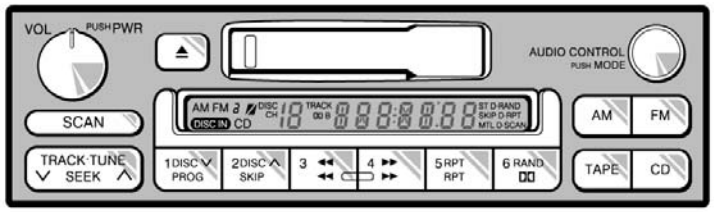


Z17011

Details of specific buttons, controls, and features are described in the alphabetical listing that follows.

1 2 3 4 5 6 (Preset buttons)

These buttons are used to preset and tune in radio stations.

To preset a station to a button: Tune in the desired station (see "TUNE" or "SEEK" button). Push and hold down the button until you hear a beep—this will set the station to the button. The button number will appear on the display.

To tune in to a preset station: Push the button for the station you want. The button number and station frequency will appear on the display.

These systems can store one AM and two FM stations for each button (The display will show "AM", "FM1" or "FM2" when you push "AM" or "FM").

⏏ (Eject button)

Push this button to eject a cassette.

After you turn the ignition to "LOCK", you will be able to eject a cassette but you will not be able to reinsert it.

◀◀/▶▶ (Reverse/Fast forward buttons)

Cassette Player

Push the fast forward button to fast forward a cassette tape. "FF" will appear on the display. Push the reverse button to rewind a tape. "REW" will appear on the display.

To stop the tape while it is fast forwarding, push the fast forward button or "TAPE"; to stop the tape while it is rewinding, push the reverse button or "TAPE".

If a tape side rewinds completely, the cassette player will stop and then play that same side. If a tape fast forwards completely, the cassette player will play the other side of the tape, using the auto-reverse feature.

Compact Disc Player

If you want to fast forward or reverse through a compact disc track, push and hold in the fast forward or reverse button. When you release the button, the compact disc player will resume playing.

AM

Push "AM" to switch the AM band. "AM" will appear on the display.

If the audio system is off, you can turn on the radio by pushing "AM". Also, push "AM" to switch from cassette or compact disc operation to radio operation.

AUDIO CONTROL / MODE

Manual tone adjustment function—

This knob is used to adjust the tone manually.

For low-pitch tone adjustment, push "AUDIO CONTROL / MODE" repeatedly until "BAS" appears on the display. Then turn the knob to suit your preference.

The display will show the range from "BAS -5" to "BAS 5".

For middle-pitch tone adjustment, push "AUDIO CONTROL / MODE" repeatedly until "MId" appears on the display. Then turn the knob to suit your preference.

The display will show the range from "MId -5" to "MId 5".

For high-pitch tone adjustment, push "AUDIO CONTROL / MODE" repeatedly until "TRE" appears on the display. Then turn the knob to suit your preference.

The display will show the range from "TRE -5" to "TRE 5".

Sound balance adjustment function—

This knob is also to adjust the sound balance between the front and rear, and the right and left speakers.

For front/rear adjustment, push "AUDIO CONTROL / MODE" repeatedly until "FAd" appears on the display. Then turn the knob to adjust the front/rear balance.

The display will show the range from "FAd F7" to "FAd R7".

For left/right adjustment, push "AUDIO CONTROL / MODE" repeatedly until "BAL" appears on the display. Then turn the knob to adjust the left/right balance.

The display will show the range from "BAL L7" to "BAL R7".

CD (Compact Disc)

Push "CD" to switch from radio or cassette operation to compact disc operation. If the audio system is off, you can turn on the compact disc player by pushing "CD". In both cases, a disc must already be loaded in the player.

When the audio is set into compact disc operation, the display shows the track or, track and disc number currently being played. Each time you push "CD", the system changes between single disc player and automatic changer.

Your audio system shows six different display if the player malfunctions.

If "WAIT" appears on the display, it indicates inside the player unit may be too hot due to the very high ambient temperature. Remove the disc or magazine from the player and allow the player to cool down.

If "Err 1" appears on the display, it indicates the disc is dirty, damaged, or it was inserted up-side down. Clean the disc or insert it correctly.

If "Err 2" appears on the display, it indicates no disc is loaded inside the magazine, insert a disc.

If "Err 3" or "Err 4" on the display, it indicates there is a trouble inside the system. Eject the disc or magazine. Set the disc or magazine again.

If "OPEn" appears on the display, it indicates the compact disc auto changer lid is open. Close the compact disc auto changer lid.

If the malfunction is not recovered, take your vehicle to your Toyota dealer.

DISC ∨∧

Compact disc auto changer only—

By using this button, you can select a disc you wish to listen to.

Push the either side of the button until the number of the disc you want to listen to appears on the display.

Dolby® DD B NR*

If you are listening to a tape that was recorded with Dolby® B Noise Reduction, push the button marked with the double-D symbol. The double-D symbol will appear on the display. Push the button again to turn off Dolby® B NR.

The Dolby NR mode reduces tape noise by about 10 dB. For best sound reproduction, play your tapes with this button on or off according to the mode used for recording the tape.

*: Dolby noise reduction manufactured under license from Dolby Laboratories Licensing Corporation. "DOLBY" and the double D symbol DD are trademarks of Dolby Laboratories Licensing Corporation.

FM

Push "FM" to switch the FM band. "FM1" or "FM2" will appear on the display. This system allow you to set twelve FM stations, two for each button.

If the audio system is off, you can turn on the radio by pushing "FM". Also, push "FM" to switch from cassette or compact disc operation to radio operation.

MTL (Metal) Display

If a metal or chrome equivalent cassette tape is put in the cassette player, the player will automatically adapt to it and "MTL" will appear on the display.

PROG (Program)

Push "PROG" to select the other side of a cassette tape. The display indicates which side is currently selected ("◢ " indicates top side, "◤ " indicates bottom side).

Auto-reverse feature: After the cassette player reaches the end of a tape side, it automatically reverses and begins to play the other side. This is true whether the cassette was playing or fast forwarding.

RAND (Random)

There are two random features—you can either listen to the tracks on all the compact discs in the magazine in random order, or only listen to the tracks on a specific compact disc in random order.

Random playing for the tracks on a disc: Quickly push and release "RAND". "RAND" will appear on the display and the disc you are listening to in random order. If you hear beep, you held the button too long, and the player will play all the tracks in the magazine in random order. To turn off the random feature, push the "RAND" a second time.

Compact disc auto changer only—

Random playing for all the tracks in the magazine:
Push and hold "RAND" until you hear a beep. "D·RAND" will appear on the display and the player will perform all the tracks on all the discs in the magazine in random order. To turn off the random feature, push "RAND" a second time.

RPT (Repeat)

Cassette Player

Push ”RPT” while the track is playing. ”RPT” will appear on the display. When the track ends, it will automatically be rewound and replayed. This process will be continued until you push the button again to turn off the repeat feature.

There must be at least 3 seconds of blank space between tracks in order for the repeat feature to work correctly.

Compact Disc Player

There are two repeat features—you can either replay a disc track or a whole compact disc.

Repeating a track:
Quickly push and release ”RPT” while the track is playing. ”RPT” will appear on the display. If you hear a beep, you held the button too long, and the player will repeat the whole disc. When the track ends, it will automatically be replayed. This process will be continued until you push the button again to turn off the repeat feature.

Compact disc auto changer only—

Repeating a disc:
Push and hold ”RPT” until you hear a beep. ”D·RPT” will appear on the display. The player will repeat all the tracks on the disc you are listening to. When the disc ends, the player will automatically go back to the top track of the disc and replay. This process will be continued until you push the button again to turn off the repeat feature.

SCAN

Radio

You can either scan all the frequencies on a band or scan only the preset stations for that band.

To scan all the frequencies:
Quickly push and release ”SCAN”. If you hear a beep, you held the button too long, and the radio will scan the preset stations. The radio will find the next station up the station band, stay there for a few seconds, and then scan again. To select a station, push ”SCAN” a second time.

To scan the preset stations:
Push and hold ”SCAN” until you hear a beep. The radio will tune in the next preset station up the band, stay there for a few seconds, and then move to the next preset station. To select a station, push ”SCAN” a second time.

Compact disc player

There are two scan features—you can either scan the tracks on a specific disc or scan the first tracks of all the discs in the magazine.

Scanning for the tracks on a disc:
Quickly push and release ”SCAN”. ”SCAN” will appear on the display and the player will scan all the tracks on the disc you are listening to. If you hear a beep, you held the button too long, and the player will scan the first tracks of all the discs in the magazine. To select a track, push the ”SCAN” a second time. If the player scanned all the tracks on the disc, it will stop scanning.

Compact disc auto changer only—

Scanning for the first tracks of all the discs in the magazine:
Push and hold ”SCAN” until you hear a beep. ”D·SCAN” will appear on the display and the player will perform the first track of the next disc. To select a disc, push the ”SCAN” a second time. If the player has scanned all the discs, it will stop scanning.

SEEK (Seeking)

Radio

In the seek mode, the radio finds and plays the next station up or down the station band.

To seek a station, push and hold the ”∧” or ”∨” side of ”SEEK” until you hear a beep. Do this again to find another station.

Cassette Player

By using this button, you can skip up or down to a different track.

You can skip up to nine tracks at a time.

Push the up or down side of the button. ”FF 1” or ”REW 1” will appear on the display.

Next, push either side of the track button until the number on the display reaches the number of tracks you want to skip. If you push the button ten times, the skip feature will be turned off.

When counting the number of tracks you want to rewind, remember to count the current track as well. For example, if you want to rewind to a song that is two before the song you are listening to, push on the down side of the button until ”REW 3” appears on the display.

If you have pushed the track button more than you wanted to, push the other side of the button. The track number will be reduced.

The track number you select is not valid if it is higher than the number of tracks remaining on the current cassette side.

- After the beginning of the tape is reached, the player will automatically start playing the same side.
- After the end of the tape is reached, the player will automatically reverse sides and start playing the other side.

There must be at least 3 seconds of blank space between tracks for the track button to work correctly. In addition, the feature may not work well with some spoken word, live, or classical recordings.

SKIP

The skip feature allows you to fast forward past long stretches of blank tape. This is especially useful at the end of cassettes.

Push ”SKIP”. ”SKIP” will appear on the display. The cassette player will keep track of how much blank space it plays. Any time it has played about 10 seconds of blank tape, it will automatically fast forward to the next track and begin to play.

Push the button a second time to turn off the skip feature.

ST (Stereo reception) display

Your radio automatically changes to stereo reception when a stereo broadcast is received. ”ST” appears on the display. If the signal becomes weak, the radio reduces the amount of channel separation to prevent the weak signal from creating noise. If the signal becomes extremely weak, the radio switches from stereo to mono reception.

TAPE

Push ”TAPE” to switch from radio or compact disc operation to cassette operation. If the audio system is off, you can turn on the cassette player by pushing ”TAPE”. In both cases, a cassette must already be loaded in the player.

TRACK (Track up/down button): Compact disc player

By using this button, you can skip up or down to a different track.

Push either side of the track button until the number of the track you want to listen to appears on the display. If you want to return the beginning of the current track, push the down side of the button one time, quickly.

TUNE (Tuning)

Your Toyota has an electronic tuning radio (ETR). Push and release the ”∧” (up) or ”∨” (down) side of ”TUNE” to step up or down the station band. (If you hear a beep, you held the button too long and the radio will go into the seek mode.)

VOL/PWR (Volume/Power)

Push ”VOL/PWR” to turn the audio system on and off. Turn ”VOL/PWR” to adjust the volume.

▶Type 4

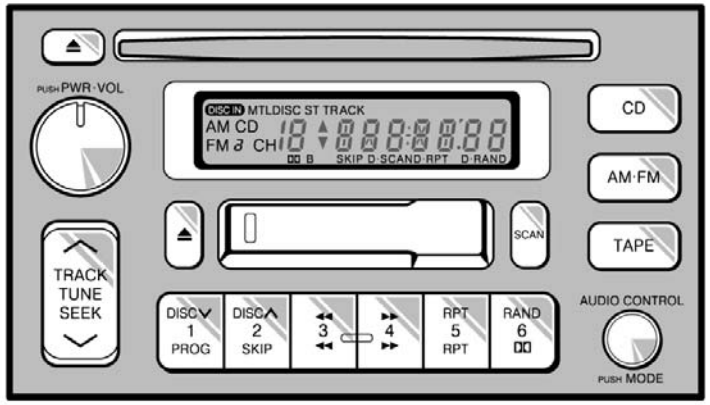


Z17012

Details of specific buttons, controls, and features are described in the alphabetical listing that follows.

1 2 3 4 5 6 (Preset buttons)

These buttons are used to preset and tune in radio stations.

To preset a station to a button: Tune in the desired station (see "TUNE" or "SEEK" button). Push and hold down the button until you hear a beep—this will set the station to the button. The button number will appear on the display.

To tune in to a preset station: Push the button for the station you want. The button number and station frequency will appear on the display.

These systems can store one AM and two FM stations for each button (The display will show "AM", "FM1" or "FM2" when you push "AM·FM").

⏏ (Eject button)

Push the cassette tape eject button to eject a cassette. Push the compact disc eject button to eject a compact disc.

After you turn the ignition to "LOCK", you will be able to eject a cassette or disc but you will not be able to reinsert it.

◀◀/▶▶ (Reverse/Fast forward buttons)

Cassette Player

Push the fast forward button to fast forward a cassette tape. "FF" will appear on the display. Push the reverse button to rewind a tape. "REW" will appear on the display.

To stop the tape while it is fast forwarding, push the fast forward button or "TAPE"; to stop the tape while it is rewinding, push the reverse button or "TAPE".

If a tape side rewinds completely, the cassette player will stop and then play that same side. If a tape fast forwards completely, the cassette player will play the other side of the tape, using the auto-reverse feature.

Compact Disc Player

If you want to fast forward or reverse through a compact disc track, push and hold in the fast forward or reverse button. When you release the button, the compact disc player will resume playing.

AM□FM

Push "AM□FM" to switch between the AM and FM bands."AM", "FM1" or "FM2" will appear on the display. These systems allow you to set twelve FM stations, two for each button.

If the audio system is off, you can turn on the radio by pushing "AM□FM". Also, push "AM□FM" to switch from cassette or compact disc operation to radio operation.

AUDIO CONTROL / MODE

Manual tone adjustment function—

This knob is used to adjust the tone manually.

For low-pitch tone adjustment, push "AUDIO CONTROL / MODE" repeatedly until "BAS" appears on the display. Then turn the knob to suit your preference.

The display will show the range from "BAS -5" to "BAS 5".

For middle-pitch tone adjustment, push "AUDIO CONTROL / MODE" repeatedly until "MId" appears on the display. Then turn the knob to suit your preference.

The display will show the range from "MId -5" to "MId 5".

For high-pitch tone adjustment, push "AUDIO CONTROL / MODE" repeatedly until "TRE" appears on the display. Then turn the knob to suit your preference.

The display will show the range from "TRE -5" to "TRE 5".

Sound balance adjustment function—

This knob is also to adjust the sound balance between the front and rear, and the right and left speakers.

For front/rear adjustment, push "AUDIO CONTROL / MODE" repeatedly until "FAd" appears on the display. Then turn the knob to adjust the front/rear balance.

The display will show the range from "FAd F7" to "FAd R7".

For left/right adjustment, push "AUDIO CONTROL / MODE" repeatedly until "BAL" appears on the display. Then turn the knob to adjust the left/right balance.

The display will show the range from "BAL L7" to "BAL R7".

CD (Compact Disc)

Push "CD" to switch from radio or cassette operation to compact disc operation. If the audio system is off, you can turn on the compact disc player by pushing "CD". In both cases, a disc must already be loaded in the player.

When the audio is set into compact disc operation, the display shows the track or, track and disc number currently being played. Each time you push "CD", the system changes between built-in single disc player and automatic changer.

Your audio system shows six different display if the player malfunctions.

If "WAIT" appears on the display, it indicates inside the player unit may be too hot due to the very high ambient temperature. Remove the disc or magazine from the player and allow the player to cool down.

If "Err 1" appears on the display, it indicates the disc is dirty, damaged, or it was inserted up-side down. Clean the disc or insert it correctly.

If "Err 2" appears on the display, it indicates no disc is loaded inside the magazine, insert a disc.

If "Err 3" or "Err 4" on the display, it indicates there is a trouble inside the system. Eject the disc or magazine. Set the disc or magazine again.

If "OPEn" appears on the display, it indicates the compact disc auto changer lid is open. Close the compact disc auto changer lid.

If the malfunction is not recovered, take your vehicle to your Toyota dealer.

DISC ∨∧

Compact disc auto changer only—

By using this button, you can select a disc you wish to listen to.

Push the either side of the button until the number of the disc you want to listen to appears on the display.

Dolby® DD B NR*

If you are listening to a tape that was recorded with Dolby® B Noise Reduction, push the button marked with the double-D symbol. The double-D symbol will appear on the display. Push the button again to turn off Dolby® B NR.

The Dolby NR mode reduces tape noise by about 10 dB. For best sound reproduction, play your tapes with this button on or off according to the mode used for recording the tape.

*: Dolby noise reduction manufactured under license from Dolby Laboratories Licensing Corporation. "DOLBY" and the double D symbol DD are trademarks of Dolby Laboratories Licensing Corporation.

MTL (Metal) Display

If a metal or chrome equivalent cassette tape is put in the cassette player, the player will automatically adapt to it and "MTL" will appear on the display.

PROG (Program)

Push "PROG" to select the other side of a cassette tape. The display indicates which side is currently selected ("▲ " indicates top side, "▼ " indicates bottom side).

Auto-reverse feature: After the cassette player reaches the end of a tape side, it automatically reverses and begins to play the other side. This is true whether the cassette was playing or fast forwarding.

PWR·VOL (Power·Volume)

Push "PWR·VOL" to turn the audio system on and off. Turn "PWR·VOL" to adjust the volume.

RAND (Random)

There are two random features—you can either listen to the tracks on all the compact discs in the magazine in random order, or only listen to the tracks on a specific compact disc in random order.

Random playing for the tracks on a disc: Quickly push and release "RAND". "RAND" will appear on the display and the disc you are listening to in random order. If you hear a beep, you held the button too long, and the player will play all the tracks in the magazine in random order. To turn off the random feature, push the "RAND" a second time.

Compact disc auto changer only—

Random playing for all the tracks in the magazine:
Push and hold "RAND" until you hear a beep. "D·RAND" will appear on the display and the player will perform all the tracks on all the discs in the magazine in random order. To turn off the random feature, push "RAND" a second time.

RPT (Repeat)

Cassette Player

Push "RPT" while the track is playing. "RPT" will appear on the display. When the track ends, it will automatically be rewound and replayed. This process will be continued until you push the button again to turn off the repeat feature.

There must be at least 3 seconds of blank space between tracks in order for the repeat feature to work correctly.

Compact Disc Player

There are two repeat features—you can either replay a disc track or a whole compact disc.

Repeating a track:
Quickly push and release ”RPT” while the track is playing. ”RPT” will appear on the display. If you hear a beep, you held the button too long, and the player will repeat the whole disc. When the track ends, it will automatically be replayed. This process will be continued until you push the button again to turn off the repeat feature.

Compact disc auto changer only—

Repeating a disc:
Push and hold ”RPT” until you hear a beep. ”D·RPT” will appear on the display. The player will repeat all the tracks on the disc you are listening to. When the disc ends, the player will automatically go back to the top track of the disc and replay. This process will be continued until you push the button again to turn off the repeat feature.

SCAN

Radio

You can either scan all the frequencies on a band or scan only the preset stations for that band.

To scan all the frequencies:
Quickly push and release ”SCAN”. If you hear a beep, you held the button too long, and the radio will scan the preset stations. The radio will find the next station up the station band, stay there for a few seconds, and then scan again. To select a station, push ”SCAN” a second time.

To scan the preset stations:
Push and hold ”SCAN” until you hear a beep. The radio will tune in the next preset station up the band, stay there for a few seconds, and then move to the next preset station. To select a station, push ”SCAN” a second time.

Compact disc player

There are two scan features—you can either scan the tracks on a specific disc or scan the first tracks of all the discs in the magazine.

Scanning for the tracks on a disc:
Quickly push and release ”SCAN”. ”SCAN” will appear on the display and the player will scan all the tracks on the disc you are listening to. If you hear a beep, you held the button too long, and the player will scan the first tracks of all the discs in the magazine. To select a track, push the ”SCAN” a second time. If the player scanned all the tracks on the disc, it will stop scanning.

Compact disc auto changer only—

Scanning for the first tracks of all the discs in the magazine:
Push ”SCAN” until you hear a beep. ”D·SCAN” will appear on the display and the player will perform the first track of the next disc. To select a disc, push the ”SCAN” a second time. If the player has scanned all the discs, it will stop scanning.

SEEK (Seeking)

Radio

In the seek mode, the radio finds and plays the next station up or down the station band.

To seek a station, push and hold the "∧" or "∨" side of "SEEK" until you hear a beep. Do this again to find another station.

Cassette Player

By using this button, you can skip up or down to a different track.

You can skip up to nine tracks at a time.

Push the up or down side of the button. "FF 1" or "REW 1" will appear on the display.

Next, push either side of the track button until the number on the display reaches the number of tracks you want to skip. If you push the button ten times, the skip feature will be turned off.

When counting the number of tracks you want to rewind, remember to count the current track as well. For example, if you want to rewind to a song that is two before the song you are listening to, push on the down side of the button until "REW 3" appears on the display.

If you have pushed the track button more than you wanted to, push the other side of the button. The track number will be reduced.

The track number you select is not valid if it is higher than the number of tracks remaining on the current cassette side.

- After the beginning of the tape is reached, the player will automatically start playing the same side.
- After the end of the tape is reached, the player will automatically reverse sides and start playing the other side.

There must be at least 3 seconds of blank space between tracks for the track button to work correctly. In addition, the feature may not work well with some spoken word, live, or classical recordings.

SKIP

The skip feature allows you to fast forward past long stretches of blank tape. This is especially useful at the end of cassettes.

Push "SKIP". "SKIP" will appear on the display. The cassette player will keep track of how much blank space it plays. Any time it has played about 10 seconds of blank tape, it will automatically fast forward to the next track and begin to play.

Push the button a second time to turn off the skip feature.

ST (Stereo reception) display

Your radio automatically changes to stereo reception when a stereo broadcast is received. "ST" appears on the display. If the signal becomes weak, the radio reduces the amount of channel separation to prevent the weak signal from creating noise. If the signal becomes extremely weak, the radio switches from stereo to mono reception.

TAPE

Push "TAPE" to switch from radio or compact disc operation to cassette operation. If the audio system is off, you can turn on the cassette player by pushing "TAPE". In both cases, a cassette must already be loaded in the player.

TRACK (Track up/down button): Compact disc player

By using this button, you can skip up or down to a different track.

Push either side of the track button until the number of the track you want to listen to appears on the display. If you want to return the beginning of the current track, push the down side of the button one time, quickly.

TUNE (Tuning)

Your Toyota has an electronic tuning radio (ETR). Push and release the "∧" (up) or "∨" (down) side of "TUNE" to step up or down the station band. (If you hear a beep, you held the button too long and the radio will go into the seek mode.)

## —Car audio system operating hints

| NOTICE |
| --- |
| To ensure the correct audio system operation:<br>◆Be careful not to spill beverages over the audio system.<br>◆Do not put anything other than a cassette tape or Compact Disc into the slot. |

RADIO RECEPTION

Usually, a problem with radio reception does not mean there is a problem with your radio —it is just the normal result of conditions outside the vehicle.

For example, nearby buildings and terrain can interfere with FM reception. Power lines or telephone wires can interfere with AM signals. And of course, radio signals have a limited range, and the farther you are from a station, the weaker its signal will be. In addition, reception conditions change constantly as your vehicle moves.

Here are some common reception problems that probably do not indicate a problem with your radio:

FM

Fading and drifting stations—Generally, the effective range of FM is about 40 km (25 miles). Once outside this range, you may notice fading and drifting, which increase with the distance from the radio transmitter. They are often accompanied by distortion.

Multi-path—FM signals are reflective, making it possible for two signals to reach your antenna at the same time. If this happens, the signals will cancel each other out, causing a momentary flutter or loss of reception.

Static and fluttering—These occur when signals are blocked by buildings, trees, or other large objects. Increasing the bass level may reduce static and fluttering.

Station swapping—If the FM signal you are listening to is interrupted or weakened, and there is another strong station nearby on the FM band, your radio may tune in the second station until the original signal can be picked up again.

AM

Fading—AM broadcasts are reflected by the upper atmosphere—especially at night. These reflected signals can interfere with those received directly from the radio station, causing the radio station to sound alternately strong and weak.

Station interference—When a reflected signal and a signal received directly from a radio station are very nearly the same frequency, they can interfere with each other, making it difficult to hear the broadcast.

Static—AM is easily affected by external sources of electrical noise, such as high tension power lines, lightening, or electrical motors. This results in static.

CARING FOR YOUR CASSETTE PLAYER AND TAPES

For high performance from your cassette player and tapes:

Clean the tape head and other parts regularly.

- A dirty tape head or tape path can decrease sound quality and tangle your cassette tapes. The easiest way to clean them is by using a cleaning tape. (A wet type is recommended.)

Use high-quality cassettes.

- Low-quality cassette tapes can cause many problems, including poor sound, inconsistent playing speed, and constant auto-reversing. They can also get stuck or tangled in the cassette player.
- Do not use a cassette if it has been damaged or tangled or if its label is peeling off.
- Do not leave a cassette in the player if you are not listening to it, especially if it is hot outside.
- Store cassettes in their cases and out of direct sunlight.
- Avoid using cassettes with a total playing time longer than 100 minutes (50 minutes per side). The tape used in these cassettes is thin and could get stuck or tangled in the cassette player.

CARING FOR YOUR COMPACT DISC PLAYER AND DISCS

- Use only compact discs labeled as shown.
- Extremely high temperatures can keep your compact disc player from working. On hot days, use the air conditioning to cool the vehicle interior before you listen to a disc.
- Bumpy roads or other vibrations may make your compact disc player skip.

- If moisture gets into your compact disc player, you may not hear any sound even though your compact disc player appears to be working. Remove the disc from the player and wait until it dries.
- Handle compact discs carefully, especially when you are inserting them. Hold them on the edge and do not bend them. Avoid getting fingerprints on them, particularly on the shiny side.
- Dirt, scrapes, warping, pin holes, or other disc damage could cause the player to skip or to repeat a section of a track. (To see a pin hole, hold the disc up to the light.)
- Remove discs from the compact disc player when you are not listening to them. Store them in their plastic cases away from moisture, heat, and direct sunlight.

To clean a compact disc: Wipe it with a soft, lint-free cloth that has been dampened with water. Wipe in a straight line from the center to the edge of the disc (not in circles). Dry it with another soft, lint-free cloth. Do not use a conventional record cleaner or anti-static device.

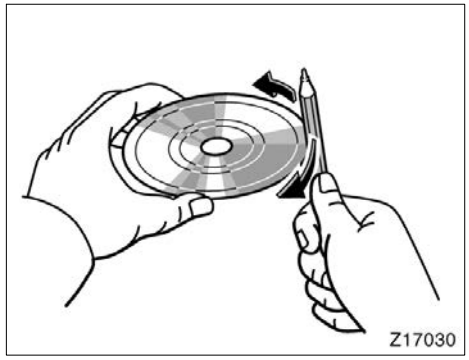


A new disc may have rough edges on its inner and outer perimeter. Remove the rough edges by pressing the side of a ball-point pen or pencil against the inner and outer perimeter of the disc as shown.

If you continue to play a disc with rough edges, flakes will fall on to the signal side of the disc and cause sound skipping or other problems.

**⚠ CAUTION**

Compact disc players use invisible laser beam which could cause hazardous radiation exposure if directed outside the unit. Be sure to operate the player correctly as instructed.

## Air conditioning system— —Controls

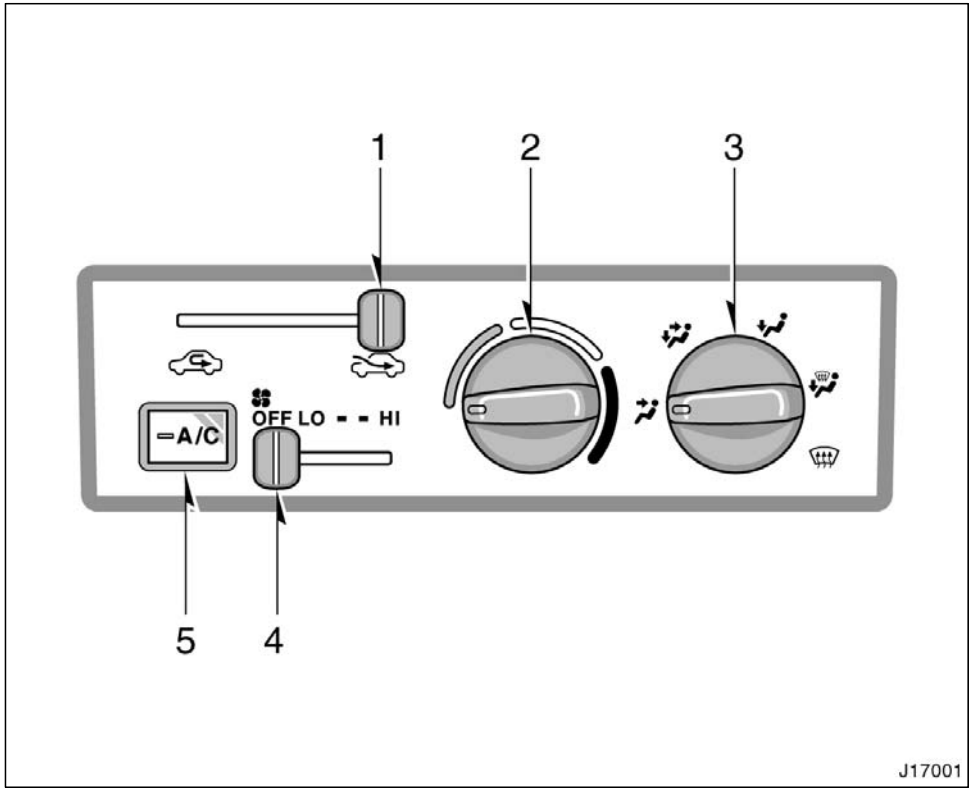


1. Air Intake Selector
2. Temperature Selector
3. Air Flow Selector
4. Fan Speed Selector
5. ”A/C” Button (on some models)

### Fan speed selector

Move the lever to adjust the fan speed—to the right to increase, to the left to decrease.

### Temperature selector

Move the knob to adjust the temperature—to the right to warm, to the left to cool.

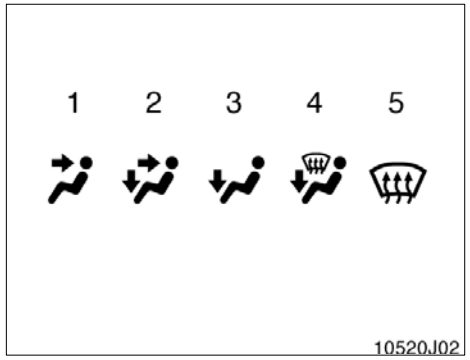


### Air flow selector

Move the knob to select the vents used for air flow.

1. Panel—Air flows mainly from the instrument panel vents.
2. Bi-level—Air flows from both the floor vents and the instrument panel vents.
3. Floor—Air flows mainly from the floor vents.
4. Floor/Windshield—Air flows mainly from the floor vents and windshield vents.
5. Windshield—Air flows mainly from the windshield vents.

For details about air flow selector settings, see the illustration after ”A/C” button.

Vehicles with ”A/C” button—

Moving the air flow control knob to windshield position turns on the defroster-linked air conditioning. This is to clean up the front view more quickly.

When the ”A/C” button is not pressed in, moving the air flow control knob to another position turns off the air conditioning.

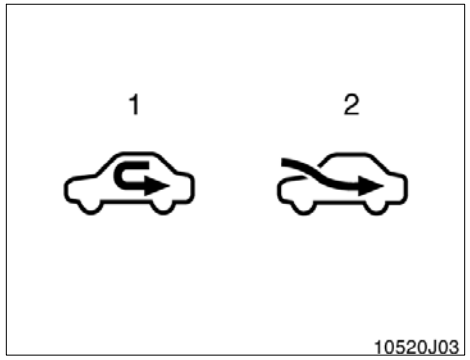


Air intake selector

Move the lever to select the air source.

1. Recirculate—Recirculates the air inside the vehicle.
2. Fresh—Draws outside air into the system.

”A/C” button

To turn on the air conditioning, press the ”A/C” button. The ”A/C” button indicator will come on. To turn the air conditioning off, press the button again.

If the ”A/C” button indicator flashes, there is a problem in the air conditioning system and the air conditioning automatically shuts off. If this happens, take your vehicle to a Toyota dealer for service.

## —Air flow selector settings

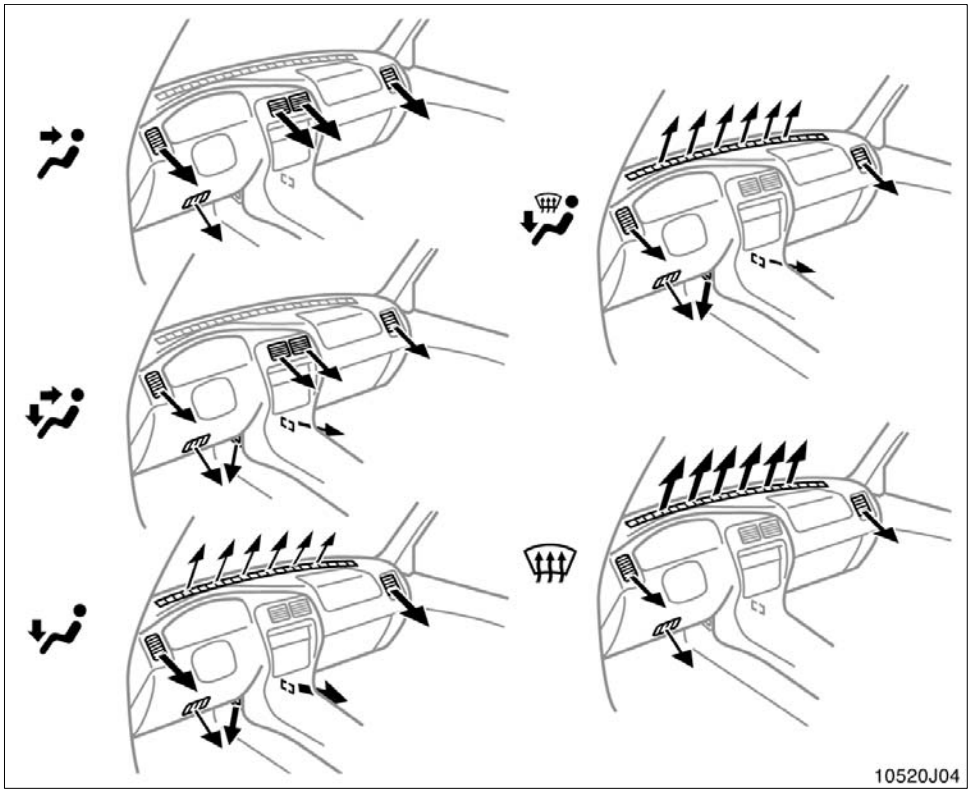


## —Operating tips

- To cool off your Toyota after it has been parked in the hot sun, drive with the windows open for a few minutes. This vents the hot air, allowing the air conditioning to cool the interior more quickly.
- Make sure the air intake grilles in front of the windshield are not blocked (by leaves or snow, for example).
- On humid days, do not blow cold air on the windshield. The windshield could fog up because of the difference in air temperature on the inside and outside of the windshield.
- Keep the area under the front seats clear to allow air to circulate throughout the vehicle.
- On cold days, move the fan speed selector to ”HI” for a minute to help clear the intake ducts of snow or moisture. This can reduce the amount of fogging on the windows.

### Heating

For best results, set controls to:

| |
|---|
| Fan speed—Any setting except ”OFF”<br>Temperature—Towards WARM (red zone)<br>Air intake—FRESH (outside air)<br>Air flow—FLOOR<br>Air conditioning—OFF |

- For quick heating, select recirculated air for a few minutes. To keep the windows from fogging, select fresh after the vehicle interior has been warmed.
- Press the ”A/C” button on for dehumidified heating.
- Choose floor/windshield air flow to heat the vehicle interior while defrosting or defogging the windshield.

### Air conditioning

For best results, set controls to:

| |
|---|
| Fan speed—Any setting except ”OFF”<br>Temperature—Towards COLD (blue zone)<br>Air intake—FRESH (outside air)<br>Air flow—PANEL<br>Air conditioning—ON |

- For quick cooling, move the air intake selector to recirculate for a few minutes.

### Ventilation

For best results, set controls to:

| |
|---|
| Fan speed—Any setting except ”OFF”<br>Temperature—Towards COLD (blue zone)<br>Air intake—FRESH (outside air)<br>Air flow—PANEL<br>Air conditioning—OFF |

### Defogging

The inside of the windshield

For best results, set controls to:

| |
|---|
| Fan speed—Any setting except ”OFF”<br>Temperature—Towards WARM (red zone) to heat; COLD (blue zone) to cool<br>Air intake—FRESH (outside air)<br>Air flow—WINDSHIELD |

Vehicles with ”A/C” button—

Moving the air flow control knob to windshield position turns on the defroster-linked air conditioning. This is to clean up the front view more quickly.

When the ”A/C” button is not pressed in, moving the air flow control knob to another position turns off the air conditioning.

- On humid days, do not blow cold air on the windshield—the difference between the outside and inside temperatures could make the fogging worse.

Defrosting

The outside of the windshield

For best results, set controls to:

| |
|---|
| Fan speed—Any setting except ”OFF” |
| Temperature—Towards WARM (red zone) |
| Air intake—FRESH (outside air) |
| Air flow—WINDSHIELD |

Vehicles with ”A/C” button—

Moving the air flow control knob to windshield position turns on the defroster-linked air conditioning. This is to clean up the front view more quickly.

When the ”A/C” button is not pressed in, moving the air flow control knob to another position turns off the air conditioning.

- To heat the vehicle interior while defrosting the windshield, choose floor/windshield air flow.

## —Instrument panel vents

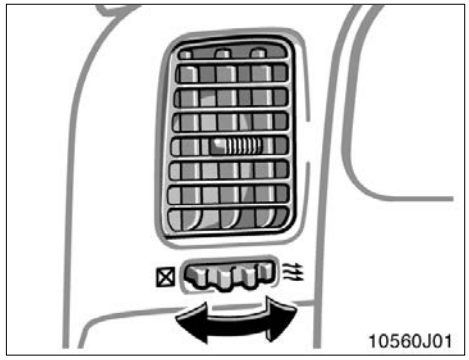


Side vents

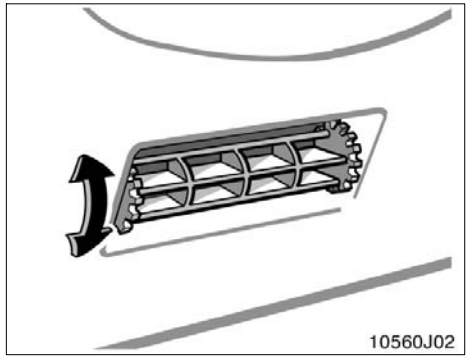


Lower vent

If air flow control is not satisfactory, check the instrument panel vents. The instrument panel vents may be opened or closed as shown.

—Rear heater system

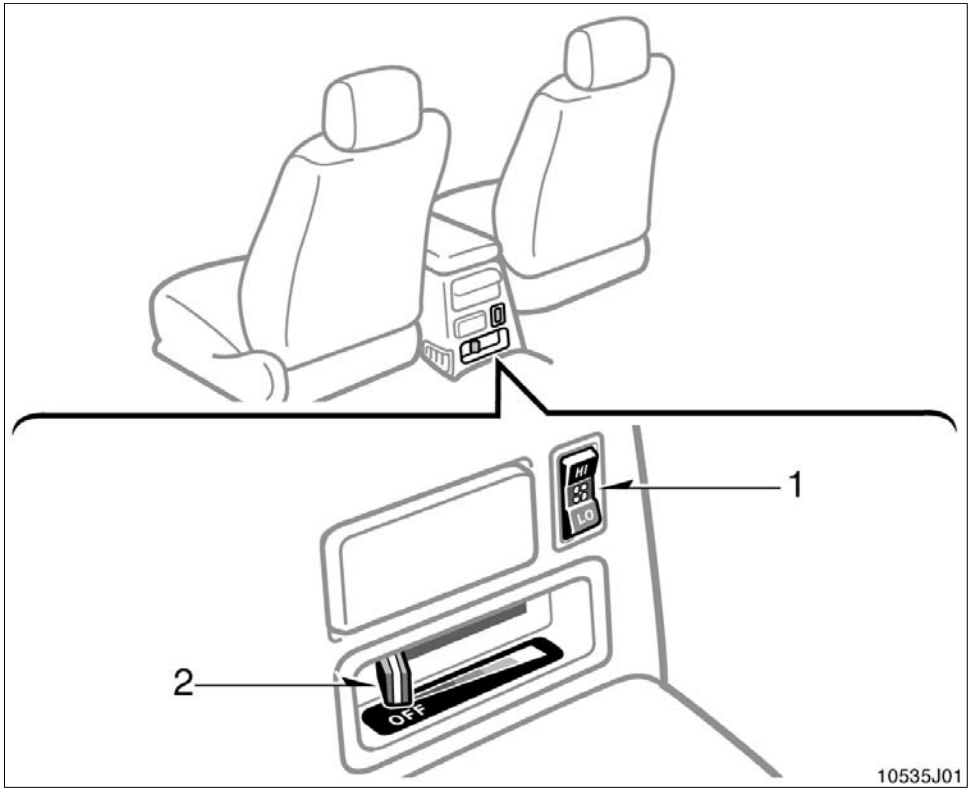


1. Fan Speed Selector
2. Temperature Selector

Fan speed selector

Push the switch toward ”HI” or ”LO”.

Temperature selector

Place the lever anywhere except the ”OFF” position.

# Part 1
# OPERATION OF INSTRUMENTS AND CONTROLS—

## Chapter 1-8
## Other equipment

- Clock
- Cigarette lighter and ashtray
- Power outlet
- Glovebox
- Auxiliary holder
- Auxiliary box
- Cup holder
- Tie-down hooks
- Luggage cover
- Floor mat

### Clock

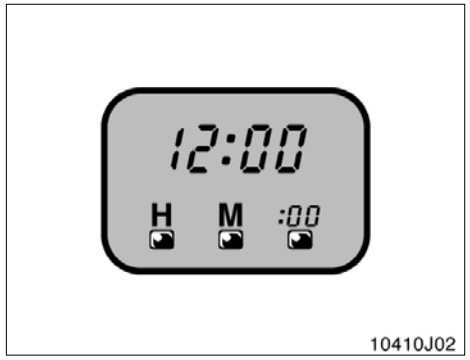


The digital clock indicates the time.

The key must be in the ”ACC” or ”ON” position.

To reset the hour: Push the ”H” button.
To reset the minutes: Push the ”M” button.

If quick adjustment to a full hour is desired, push the ”:00” button.

For example, if the ”:00” button is depressed when the time is between 1:01—1:29, the time will change to 1:00. If the time is between 1:30—1:59, the time will change to 2:00.

Once the electrical power source has been disconnected from the clock, the time is automatically set to 1:00 (one o’clock).

When the instrument panel lights are turned on, the brightness of the time indication will be reduced.

## Cigarette lighter and ashtray

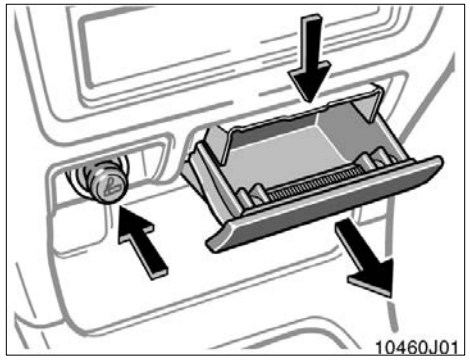


CIGARETTE LIGHTER

To use the cigarette lighter, press it in. When it becomes heated, it automatically pops out ready for use.

If the engine is not running, the key must be in the "ACC" position.

Do not hold the cigarette lighter pressed in.

Use a Toyota genuine cigarette lighter or equivalent for replacement.

ASHTRAY

To use the ashtray, pull it out.

When finished with your cigarette, thoroughly extinguish it in the ashtray to prevent other cigarette butts from catching fire. After using the ashtray, push it back in completely.

To remove the ashtray, press down on the lock spring plate and pull out.

**⚠ CAUTION**

To reduce the chance of injury in case of an accident or sudden stop while driving, always push the ashtray back in completely after using.

## Power outlet

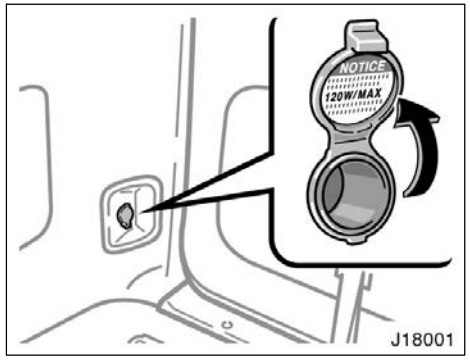


The power outlet is designed for power supply for car accessories.

The key must be in the "ACC" or "ON" position for the power outlet to be used.

**NOTICE**

- To prevent the fuse from being blown, do not use the electricity over the total vehicle capacity of 12V/120W.
- To prevent the battery from being discharged, do not use the power outlet longer than necessary when the engine is not running.

◆Close the power outlet lid when the power outlet is not in use. Inserting a foreign object other than the appropriate plug that fits the outlet, or allowing any liquid into the outlet may cause electrical failure or short circuits.

## Glovebox

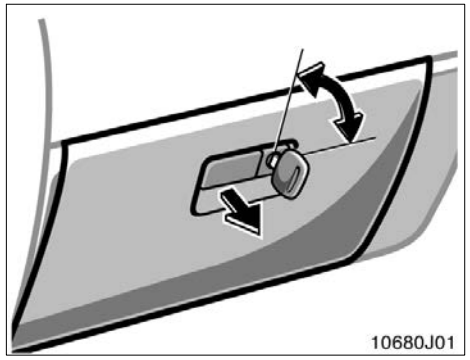


To use the glovebox, do this.

To open: Pull the lever.

To lock: Insert the master key and turn it clockwise.

On some models, the glovebox light will come on when the golvebox is open with the instrument panel lights on.

**⚠ CAUTION**

To reduce the chance of injury in case of an accident or a sudden stop, always keep the glovebox door closed while driving.

## Auxiliary holder

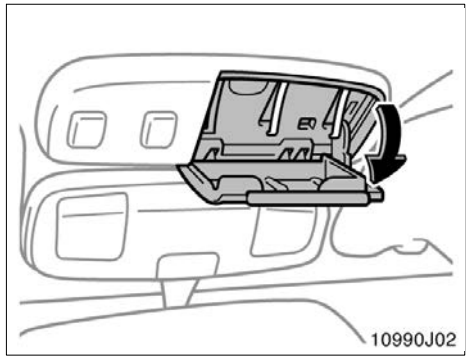


To use the auxiliary holder, open the lid.

**⚠ CAUTION**

To prevent vibration noise while driving, do not bend the holding clips.

## Auxiliary box

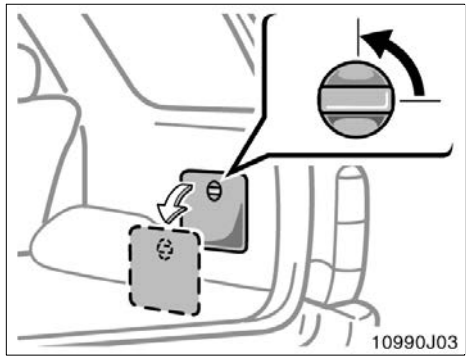


To open the box, turn the knob.

## Cup holder

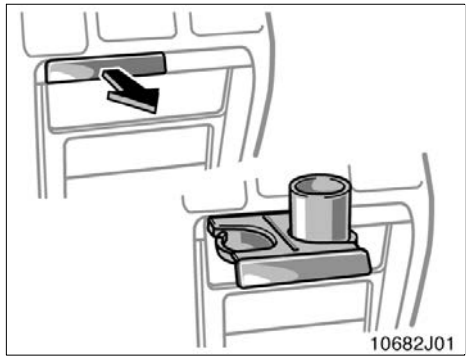


Front

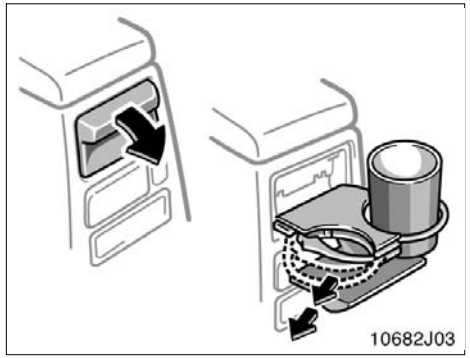


Rear

The cup holder is designed for holding cups or drink-cans securely in its holes.

To use the cup holder, pull it out.

**⚠ CAUTION**

- Do not place anything else on the cup holder, as such item may be thrown about in the compartment and possibly injure people in the vehicle during sudden braking or an accident.
- To reduce the chance of injury in case of an accident or a sudden stop while driving, keep the cup holder retracted when not in use.

## Tie-down hooks

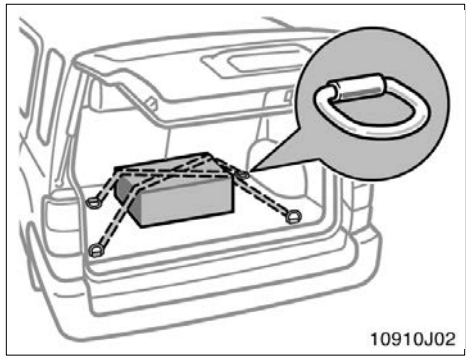


To secure your luggage, use the tie-down hooks as shown above.

See "Luggage stowage precautions" in Part 2 for what to observe in loading luggage.

## Luggage cover

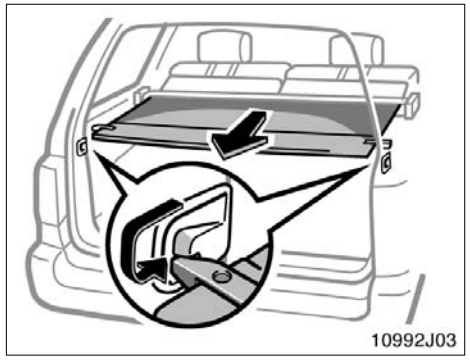


To use the luggage cover, pull it out of the retractor and hook it to the anchors.

When opening the back door, turn back the dropleaf of the luggage cover to gain access to the back door lever inside the vehicle.

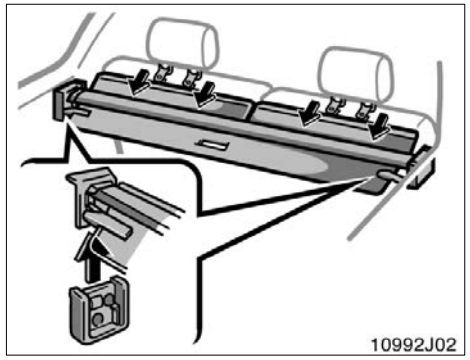


To remove the luggage cover:

1. Detatch its hooks from the head restraints.
2. Lift it up.

## Floor mat

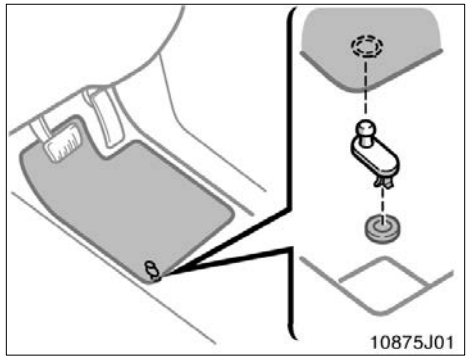

Use a floor mat of the correct size.

If the floor mat has a hole, then it is designed for use with a locking clip. Fix the floor mat and locking clip into the hole in the floor carpet.

**⚠ CAUTION**

Make sure the floor mat is properly placed on the floor carpet. If the floor mat slips and interferes with the movement of the pedals during driving, it may cause an accident.

# Part 2 INFORMATION BEFORE DRIVING YOUR TOYOTA

- Off-road vehicle precautions
- Break-in period
- Fuel
- Operation in foreign countries
- Three-way catalytic converter
- Engine exhaust cautions
- Facts about engine oil consumption
- Twin ground electrode spark plugs
- Brake system
- Brake pad wear limit indicators
- Luggage stowage precautions
- Your Toyota's identification
- Theft prevention labels
- Suspension and chassis
- Types of tires

## Off-road vehicle precautions

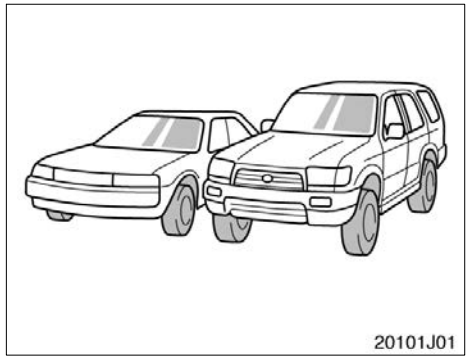


This vehicle is one of the class of vehicles which have higher ground clearance and narrower tread in relation to the height of their center of gravity to make them capable of performing in a wide variety of off-road applications. Specific design characteristics give it a higher center of gravity than ordinary cars. An advantage of the higher ground clearance is a better view of the road allowing you to anticipate problems. It is not designed for cornering at the same speeds as conventional two-wheel drive vehicles any more than low-slung sports cars are designed to perform satisfactorily under off-road conditions.

**⚠ CAUTION**

Always observe the following precautions to minimize the risk of serious personal injury or damage to your vehicle:

- Avoid sharp turns or abrupt maneuvers, if at all possible. As with other vehicles of this type, failure to operate this vehicle correctly may result in loss of control or vehicle rollover.
- Avoid loading any items on the roof that will make the center of gravity even higher.
- Always slow down in gusty crosswinds. Because of its high center of gravity, your vehicle is more sensitive to side winds than an ordinary passenger car. Slowing down will allow you to have much better control.
- Do not drive horizontally across steep slopes. Driving straight up or straight down is preferred. Your vehicle (or any similar off-road vehicle) can tip over sideways much more easily than forward or backward.

- When driving off-road or in rugged terrain, do not drive at excessive speeds, jump the vehicle, or strike objects, etc. This may cause loss of control or vehicle rollover. You are also risking expensive damage to your vehicle's suspension and chassis.

## Break-in period

Drive gently and avoid high speeds.

Your vehicle does not need an elaborate break-in. But following a few simple tips for the first 1600 km (1000 miles) can add to the future economy and long life of your vehicle:

- Do not drive over 88 km/h (55 mph).
- Run the engine at moderate speed between 2000 and 4000 rpm.
- Avoid full-throttle starts.
- Try to avoid hard stops during the first 300 km (200 miles).
- Do not drive slowly with the manual transmission in a high gear.
- Do not drive for a long time at any single speed, either fast or slow.
- Do not tow a trailer during the first 800km (500miles).

## Fuel

FUEL TYPE

Your new vehicle must use only unleaded gasoline.

To help prevent gas station mixups, your Toyota has a new smaller fuel tank opening. The special nozzle on pumps with unleaded fuel will fit it, but the larger standard nozzle on pumps with leaded gas will not.

At a minimum, the gasoline you use should meet the specifications of ASTM D4814 in the U.S.A. and CGSB 3.5-M93 in Canada.

NOTICE

Do not use leaded gasoline. Use of leaded gasoline will cause the three-way catalytic converter to lose its effectiveness and the emission control system to function improperly. Also, this can increase maintenance costs.

OCTANE RATING

Select Octane Rating 87 (Research Octane Number 91) or higher.

Use of unleaded gasoline with an octane rating or research octane number lower than stated above will cause persistent heavy knocking. If it is severe, this will lead to engine damage.

If your engine knocks...

If you detect heavy knocking even when using the recommended fuel, or if you hear steady knocking while holding a steady speed on level roads, consult your Toyota dealer.

However, now and then, you may notice light knocking for a short time while accelerating or driving up hills. This is no need of concern.

GASOLINES CONTAINING DETERGENT ADDITIVES

Toyota recommends use of gasolines that contain detergent additives to avoid build-up of engine deposits.

For further details, ask your Toyota dealer or a local gasoline retailer.

IMPROVED GASOLINES

The American Automobile Manufacturers Association (AAMA) has developed a specification of improved gasolines. The AAMA specification offers optimal fuel information for better vehicle performance and better protection of your engine.

Toyota recommends the use of gasolines that meet the AAMA specification, if available, for improved driveability and emission control system.

GASOLINES CONTAINING MTBE

Gasolines that contain MTBE (Methyl Tertiary-Butyl Ether) are available in the market. If you use a gasoline mixed with MTBE, make certain that it does not contain more than 15% of MTBE.

If the use of gasolines containing MTBE causes poor driveability and/or poor fuel economy, you should discontinue the use of fuels containing MTBE.

GASOLINES CONTAINING MMT

Some gasolines contain an octane-enhancing additive called MMT (methylcyclopentadienyl manganese tricarbonyl).

Toyota does not recommend the use of gasolines that contain MMT. If fuels containing MMT are used, your emission control system may be adversely affected. The Malfunction Indicator Lamp on the instrument cluster may come on. If this happens, contact your Toyota dealer for service.

GASOLINES CONTAINING ALCOHOL

If you use gasohol in your Toyota, be sure that it is unleaded, has an octane rating no lower than 87 and does not contain more than 10% ethanol.

Gasohol is a mixture of gasoline and ethanol.

Toyota does not recommend the use of gasolines containing methanol. If you use gasoline containing methanol, use only gasoline meeting the requirements above and also containing less than 5% methanol with cosolvents and corrosion inhibitors for methanol.

NOTICE

- Do not use gasohol other than stated above. It will cause fuel system damage or vehicle performance problems.
- If driveability problems occur (poor hot starting, vaporizing, engine knock, etc.), discontinue the use.
- Take care not to spill gasohol during refueling. Gasohol may cause paint damage.

FUEL TANK CAPACITY

70 L (18.5 gal., 15.4 Imp. gal.)

## Operation in foreign countries

If you plan to drive your Toyota in another country...

First, comply with the vehicle registration laws.

Second, confirm the availability of the correct fuel (unleaded and minimum octane number).

## Three-way catalytic converter

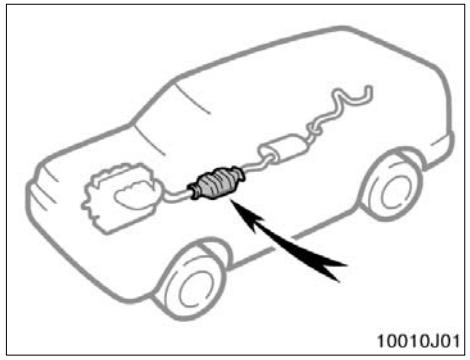


The three-way catalytic converter is an emission control device installed in the exhaust system.

The purpose is to reduce pollutants in the exhaust gas.

CAUTION

- Keep people and combustible materials away from the exhaust pipe while the engine is running. The exhaust gas is very hot.
- Do not drive, idle or park your vehicle over anything that might burn easily such as grass, leaves, paper or rags.

NOTICE

A large amount of unburned gases flowing into the three-way catalytic converter may cause it to overheat and create a fire hazard. To prevent this and other damage, observe the following precautions:

- ◆Use only unleaded gasoline.
- ◆Do not drive with an extremely low fuel level; running out of fuel could cause the engine to misfire, creating an excessive load on the three-way catalytic converter.
- ◆Do not allow the engine to run at idle speed for more than 20 minutes.
- ◆Avoid racing the engine.
- ◆Do not push-start or pull-start your vehicle.
- ◆Do not turn off the ignition while the vehicle is moving.

- ◆Keep your engine in good running order. Malfunctions in the engine electrical system, electronic ignition system/distributor ignition system or fuel systems could cause an extremely high three-way catalytic converter temperature.
- ◆If the engine becomes difficult to start or stalls frequently, take your vehicle in for a check-up as soon as possible. Remember, your Toyota dealer knows your vehicle and its three-way catalytic converter system best.
- ◆To ensure that the three-way catalytic converter and the entire emission control system operate properly, your vehicle must receive the periodic inspections required by the Toyota Maintenance Schedule. For scheduled maintenance information, refer to the separate "Owner's Manual Supplement/Maintenance Schedule".

## Engine exhaust cautions

⚠ CAUTION

- Avoid inhaling the engine exhaust. It contains carbon monoxide, which is a colorless and odorless gas. It can cause unconsciousness or even death.
- Make sure the exhaust system has no holes or loose connections. The system should be checked from time to time. If you hit something, or notice a change in the sound of the exhaust, have the system checked immediately.
- Do not run the engine in a garage or enclosed area except for the time needed to drive the vehicle in or out. The exhaust gases cannot escape, making this a particularly dangerous situation.
- Do not remain for a long time in a parked vehicle with the engine running. If it is unavoidable, however, do so only in an unconfined area and adjust the heating or cooling system to force outside air into the vehicle.

- Keep the back door and back window closed while driving. An open or unsealed back door and back window, may cause exhaust gases to be drawn into the vehicle. If you must drive with the trunk lid open to accommodate a large object, close the windows, open all the instrument panel vents and have the heating or cooling system deliver fresh air into the vehicle by turning the fan to high speed with the air intake control set at the outside air position.
- To allow proper operation of your vehicle's ventilation system, keep the inlet grilles in front of the windshield clear of snow, leaves, or other obstructions.
- If you smell exhaust fumes in the vehicle, drive with the windows open and the back door and back window closed. Have the cause immediately located and corrected.

## Facts about engine oil consumption

FUNCTIONS OF ENGINE OIL

Engine oil has the primary functions of lubricating and cooling the inside of the engine, and plays a major role in maintaining the engine in proper working order.

ENGINE OIL CONSUMPTION

It is normal that an engine should consume some engine oil during normal engine operation. The causes of oil consumption in a normal engine are as follows.

- Oil is used to lubricate pistons, piston rings and cylinders. A thin film of oil is left on the cylinder wall when a piston moves downwards in the cylinder. High negative pressure generated when the vehicle is decelerating sucks some of this oil into the combustion chamber. This oil as well as some part of the oil film left on the cylinder wall is burned by the high temperature combustion gases during the combustion process.
- Oil is also used to lubricate the stems of the intake valves. Some of this oil is sucked into the combustion chamber together with the intake air and is burned along with the fuel. High temperature exhaust gases also burn the oil used to lubricate the exhaust valve stems.

The amount of engine oil consumed depends on the viscosity of the oil, the quality of the oil and the conditions the vehicle is driven under.

More oil is consumed by high-speed driving and frequent acceleration and deceleration.

A new engine consumes more oil, since its pistons, piston rings and cylinder walls have not become conditioned.

When judging the amount of oil consumption, note that the oil may become diluted and make it difficult to judge the true level accurately.

As an example, if a vehicle is used for repeated short trips, and consumes a normal amount of oil, the dipstick may not show any drop in the oil level at all, even after 1000 km (600 miles) or more. This is because the oil is gradually becoming diluted with fuel or moisture, making it appear that the oil level has not changed.

The diluting ingredients evaporate out when the vehicle is then driven at high speeds, as on an expressway, making it appear that oil is excessively consumed after driving at high speeds.

IMPORTANCE OF ENGINE OIL LEVEL CHECK

One of the most important points in proper vehicle maintenance is to keep the engine oil at the optimum level so that oil function will not be impaired. Therefore, it is essential that the oil level be checked regularly. Toyota recommends that the oil level be checked every time you refuel the vehicle.

| NOTICE |
| --- |
| Failure to check the oil level regularly could lead to serious engine trouble due to insufficient oil. |

For detailed information on oil level check, see "Checking the engine oil level" in Chapter 7-2.

## Twin ground electrode spark plugs (5VZ-FE engine)

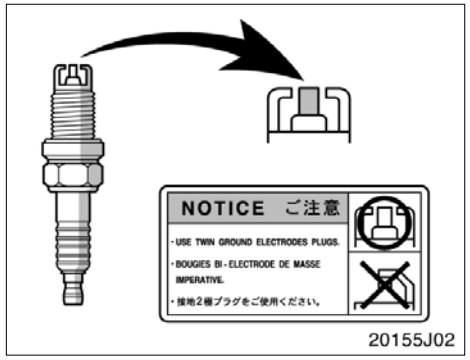


Your engine is fitted with twin ground electrode spark plugs.

| NOTICE |
| --- |
| Use only twin ground electrode spark plugs for your engine performance. |

## Brake system

TANDEM MASTER CYLINDER BRAKE SYSTEM

The tandem master cylinder brake system is a hydraulic system with two separate sub-systems. If either sub-system should fail, the other will still work. However, the pedal will be harder to press, and your stopping distance will be longer. Also, the brake system warning light may come on.

| ⚠ CAUTION |
| --- |
| Do not drive your vehicle with only a single brake system. Have your brakes fixed immediately. |

BRAKE BOOSTER

The brake booster uses engine vacuum to power-assist the brakes. If the engine should quit while you are driving, you can bring the vehicle to a stop with normal pedal pressure. There is enough reserve vacuum for one or two stops—but no more!

| ⚠ CAUTION |
| --- |
| ● Do not pump the brake pedal if the engine stalls. Each push on the pedal uses up your vacuum reserve. |

- Even if the power assist is completely lost, the brakes will still work. But you will have to push the pedal hard—much harder than normal. And your braking distance will be longer.

ANTI-LOCK BRAKE SYSTEM
(with "ABS" warning light)

The anti-lock brake system is designed to automatically help prevent lock-up of the wheels during sudden braking or braking on slippery road surfaces. This assists in providing directional stability and steering performance of the vehicle under these circumstances.

The anti-lock brake system becomes operative after the vehicle has accelerated to a speed in excess of approximately 10 km/h (6 mph). It stops operating when the vehicle decelerates to a speed below approximately 5 km/h (3 mph).

You may hear a sound in the engine compartment for a few seconds when the engine is started or just after the vehicle is started. This means that the anti-lock brake system is in the self check mode, and does not indicate a malfunction.

Effective way to press the "ABS" brake pedal: When the anti-lock brake system function is in action, you may feel the brake pedal pulsating and hear a noise. In this situation, to let the anti-lock brake system work for you, just hold the brake pedal down more firmly. Do not pump the brake. This will result in reduced braking performance.

The brake pedal pulsation caused by the anti-lock brake system may indicate hazardous road surface conditions. Although the anti-lock brake system assists in providing vehicle control, it is still important to drive with all due care, because the anti-lock brake system cannot overcome the laws of physics that act on your vehicle:

- Braking capability is dependent on tire friction with the road surface.
- Even though the anti-lock brake system is operating, a driver cannot maintain full control on certain slippery road surfaces, when cornering at high speeds, or in violent maneuvers.
- Avoid high speeds on wet roads. The anti-lock brake system cannot eliminate the risk of hydroplaning and loss of tire friction.

Always maintain a safe distance from the vehicle in front of you. Compared with vehicles not fitted with an anti-lock brake system, your vehicle may require a longer stopping distance in the following cases:

- Driving on rough, gravel or snow-covered roads.
- Driving with tire chains installed.
- Driving on roads where the road surface is pitted or has other differences in surface height.

⚠ CAUTION

Do not use tires other than the manufacturer's designated tires, and do not mix tires or wheels of different sizes. You may prevent the anti-lock brake system from operating at full effectiveness.

Vehicles with rear differential lock system—The anti-lock brake system does not operate when the rear differential is locked. It is normal operation for the "ABS" warning light to be on at this time.

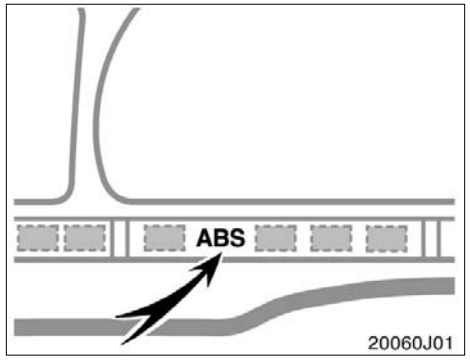


Type A

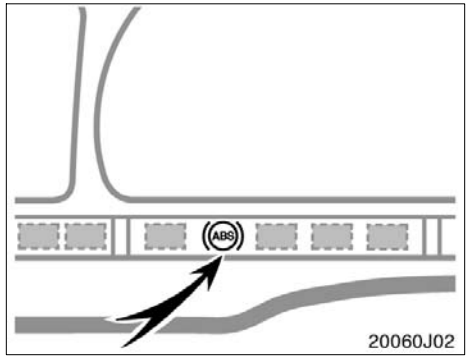


Type B

### ”ABS” warning light

This light comes on when the ignition key is turned to the ”ON” position. After about 3 seconds, the light will go off.

When the light is on with the rear differential locked, it indicates the anti-lock brake system will not operate.

If either of the following conditions occurs, this indicates a malfunction somewhere in the parts monitored by the warning light system. Contact your Toyota dealer as soon as possible to service the vehicle.

- The light does not come on as described above, or remains on.
- The light comes on while driving with the rear differential unlocked.
- The light does not come on with the rear differential locked.
- The light comes on while driving.

Even if the anti-lock brake system should fail, the brake system will still operate conventionally. However, when the ”ABS” warning light is on (and the brake system warning light is off), the anti-lock brake system is not assisting brake performance so that the wheels can lock-up during sudden braking or braking on slippery road surfaces. Have your vehicle checked by your Toyota dealer as soon as possible.

## Brake pad wear limit indicators

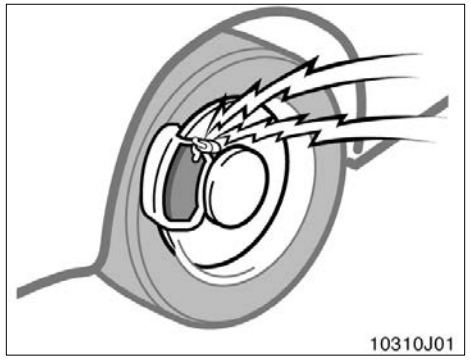


The brake pad wear limit indicators on your disc brakes give a warning noise when the brake pads are worn to where replacement is required.

If you hear a squealing or scraping noise while driving, have the brake pads checked and replaced by your Toyota dealer as soon as possible. Expensive rotor damage can result if the pads are not replaced when necessary.

## Luggage stowage precautions

When stowing luggage or cargo in the vehicle, observe the following:

- Put luggage or cargo in the luggage compartment when at all possible. Be sure all items are secured in place.
- Be careful to keep the vehicle balanced. Locating the weight as far forward as possible helps maintain balance.
- For better fuel economy, do not carry unneeded weight.

**⚠ CAUTION**

- To prevent luggage or packages from sliding forward during braking, do not stack anything in the luggage compartment higher than the seatbacks. Keep luggage or packages low, as close to the floor as possible.
- Never allow anyone to ride in the luggage compartment. It is not designed for passengers. They should ride in their seats with their seat belts properly fastened. Otherwise, they are much more likely to suffer serious bodily injury, in the event of sudden braking or a collision.
- Do not place anything on the filler panel or luggage cover. Such items may be thrown about and possibly injure people in the vehicle during sudden braking or an accident. (secure all items in a safe place.)
- Do not drive with objects left on top of the instrument panel. They may interfere with the driver's field of view. Or they may move during sharp vehicle acceleration or turning, and impair the driver's control of the vehicle. In an accident they may injure the vehicle occupants.

**NOTICE**

Do not load the vehicle beyond the vehicle capacity weight specified in Part 8.

## Your Toyota's identification—
## —Vehicle identification number

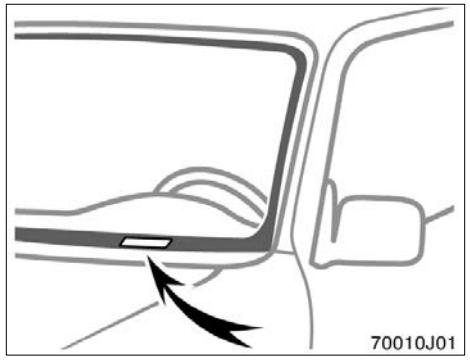


The vehicle identification number (VIN) is the legal identifier for your vehicle. This number is on the left top of the instrument panel, and can be seen through the windshield from outside.

This is the primary identification number for your Toyota. It is used in registering the ownership of your vehicle.

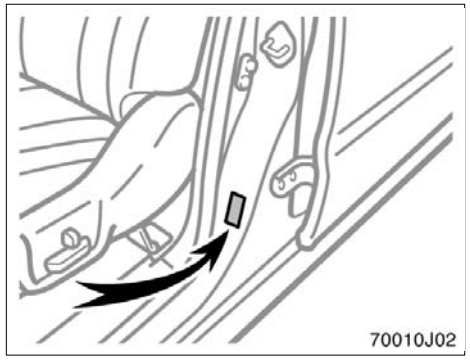


The vehicle identification number (VIN) is also on the Certification Label.

## —Engine number

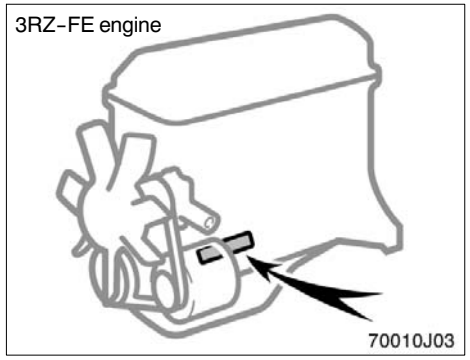


3RZ-FE engine

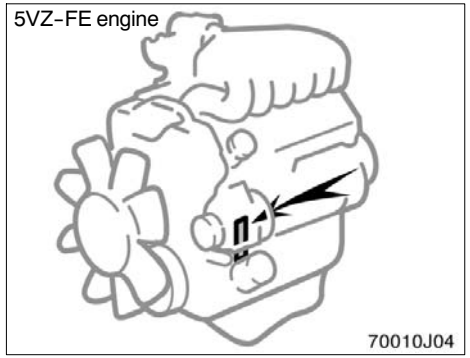


5VZ-FE engine

The engine number is stamped on the engine block as shown.

## Theft prevention labels (except for Canada)

Your new vehicle carries theft prevention labels which are approximately 56 mm (2.20 in.) by 16 mm (0.63 in.).

The purpose of these labels is to reduce the incidence of vehicle thefts by facilitating the tracing and recovery of parts from stolen vehicles. The label is designed so that once it is applied to a surface, any attempt to remove it will result in destroying the integrity of the label. Transferring these labels intact from one part to another, will be impossible.

**NOTICE**

You should not attempt to remove the theft prevention labels as it may violate certain state or federal laws.

## Suspension and chassis

**⚠ CAUTION**

Do not modify the suspension/chassis with lift kits, spacers, springs, etc. It can cause dangerous handling characteristics resulting in loss of control.

## Types of tires

Determine what kind of tires your vehicle is originally equipped with.

1. Summer tires

Summer tires are high-speed capability tires best suited to highway driving under dry conditions.

Since summer tires do not have the same traction performance as snow tires, summer tires are inadequate for driving on snow-covered or icy roads. For driving on snow-covered or icy roads, we recommend using snow tires. If installing snow tires, be sure to replace all four tires.

2. All season tires

All season tires are designed to provide better traction in snow and to be adequate for driving in most winter conditions, as well as for use all year round.

All season tires, however, do not have adequate traction performance compared with snow tires in heavy or loose snow. Also, all season tires fall short in acceleration and handling performance compared with summer tires in highway driving.

**⚠ CAUTION**

- Do not mix summer and all season tires on your vehicle as this can cause dangerous handling characteristics, resulting in loss of control.
- Do not use tire other than the manufacturer's designated tires, and never mix tires or wheels of the sizes different from the originals.

# Part 3 STARTING AND DRIVING

- Before starting the engine
- How to start the engine
- Tips for driving in various conditions
- Off-road driving precautions
- Winter driving tips
- Trailer towing
- How to save fuel and make your vehicle last longer, too

## Before starting the engine

1. Check the area around the vehicle before entering it.
2. Adjust seat position, seatback angle, seat cushion angle, head restraint height and steering wheel angle.
3. Adjust inside and outside rear view mirrors.
4. Lock all doors.
5. Fasten seat belts.

## How to start the engine— (a) Before cranking

1. Apply the parking brake firmly.
2. Turn off unnecessary lights and accessories.
3. Manual transmission: Press the clutch pedal to the floor and shift the transmission into neutral. Hold the clutch pedal to the floor until the engine is started. A starter safety device will prevent the starter from operating if the clutch pedal is not fully depressed.

   Automatic transmission: Put the selector lever in ”P”. If you need to restart the engine while the vehicle is moving, put the selector lever in ”N”. A starter safety device will prevent the starter from operating if the selector lever is in any drive position.
4. Automatic transmission only: Depress the brake pedal and hold it to the floor until driving off.

## (b) Starting the engine

Before starting the engine, be sure to follow the instructions in "(a) Before cranking".

### Normal starting procedure

The multiport fuel injection system/sequential multiport fuel injection system in your engine automatically controls the proper air-fuel mixture for starting. You can start a cold or hot engine as follows:

1. With your foot off the accelerator pedal, crank the engine by turning the key to "START". Release it when the engine starts.

2. After the engine runs for about 10 seconds, you are ready to drive.

If the weather is below freezing, let the engine warm up for a few minutes before driving.

### If the engine stalls...

Simply restart it, using the correct procedure given in normal starting.

### If the engine will not start—

See "If your vehicle will not start" in Part 4.

NOTICE

- Do not crank for more than 30 seconds at a time. This may overheat the starter and wiring systems.
- Do not race a cold engine.
- If the engine becomes difficult to start or stalls frequently, have the engine checked immediately.

## Tips for driving in various conditions

- Always slow down in gusty crosswinds. This will allow you much better control.
- Drive slowly onto curbs and, if possible, at a right angle. Avoid driving onto high, sharp-edged objects and other road hazards. Failure to do so can lead to severe tire damage resulting in tire bursts.
- When parking on a hill, turn the front wheels until they touch the curb so that the vehicle will not roll. Apply the parking brake, and place the transmission in "P" (automatic) or in first or reverse (manual). If necessary, block the wheels.
- Washing your vehicle or driving through deep water may get the brakes wet. To see whether they are wet, check that there is no traffic near you, and then press the pedal lightly. If you do not feel a normal braking force, the brakes are probably wet. To dry them, drive the vehicle cautiously while lightly pressing the brake pedal with the parking brake pulled. If they still do not work safely, pull to the side of the road and call a Toyota dealer for assistance.

- Four-wheel drive models—Toyota recommends not using four-wheel drive on dry hard-surfaced roads, because four-wheel driving will cause unnecessary noise and wear, and poor fuel economy.
- Four-wheel drive models—In cold temperatures, noise may occur when driving in two-wheel drive before the transfer is warmed up. Therefore, first drive in four-wheel drive until the transfer is warmed up.

**⚠ CAUTION**

- Before driving off, make sure that the parking brake is fully released and the parking brake reminder light is off.
- Do not leave your vehicle unattended while the engine is running.
- Do not rest your foot on the brake pedal while driving. It can cause dangerous overheating, needless wear, and poor fuel economy.
- To drive down a long or steep hill, reduce your speed and downshift. Remember, if you ride the brakes excessively, they may overheat and not work properly.

- Be careful when accelerating, upshifting, downshifting or braking on a slippery surface. Sudden acceleration or engine braking, could cause the vehicle to spin or skid.
- Do not drive in excess of the speed limit. Even if the legal speed limit permits it, do not drive over 140 km/h (85 mph) unless your vehicle has high-speed capability tires. Driving over 140 km/h (85 mph) may result in tire failure, loss of control and possible injury. Be sure to consult a tire dealer to determine whether the tires on your vehicle are high-speed capability tires or not before driving at such speeds.
- Do not continue normal driving when the brakes are wet. If they are wet, your vehicle will require a longer stopping distance, and it may pull to one side when the brakes are applied. Also, the parking brake will not hold the vehicle securely.

## Off-road driving precautions

When driving your vehicle off-road, please observe the following precautions to ensure your driving enjoyment and to help prevent the closure of areas to off-road vehicles.

a. Drive your vehicle only in areas where off-road vehicles are permitted to travel.

b. Respect private property. Get owner's permission before entering private property.

c. Do not enter areas that are closed. Honor gates, barriers and signs that restrict travel.

d. Stay on established roads. When conditions are wet, driving techniques should be changed or travel delayed to prevent damage to roads.

For owners in U.S. mainland, Hawaii and Puerto Rico:

To obtain additional information pertaining to driving your vehicle off-road, consult the following organizations.

- State and Local Parks and Recreation Departments
- State Motor Vehicle Bureau
- Recreational Vehicle Clubs
- U.S. Forest Service and Bureau of Land Management

**⚠ CAUTION**

Always observe the following precautions to minimize the risk of serious personal injury or damage to your vehicle:

- Drive carefully when off the road. Do not take unnecessary risks by driving in dangerous places.
- Do not grip the steering wheel spokes when driving off-road. A bad bump could jerk the wheel and injure your hands. Keep both hands and especially your thumbs on the outside of the rim.
- Always check your brakes for effectiveness immediately after driving in sand, mud, water or snow.
- After driving through tall grass, mud, rock, sand, rivers, etc., check that there is no grass, bush, paper, rags, stone, sand, etc. adhering or trapped on the underbody. Clear off any such matter from the underbody. If the vehicle is used with these materials trapped or adhering to the underbody, a breakdown or fire could occur.
- The driver and all passengers should fasten their seat belts whenever the vehicle is moving.

**NOTICE**

◆If driving through water, such as when crossing shallow streams, first check the depth of the water and the bottom of the river bed for firmness. Drive slowly and avoid deep water.

◆Take all necessary safety measures to ensure that water damage to the engine or other components does not occur.

Water entering the engine air intake will cause severe engine damage.

Water can wash the grease from wheel bearings, causing rusting and premature failure, and may also enter the differentials, transmission and transfer case, reducing the gear oil's lubricating qualities.

◆Sand and mud that has accumlated in brake drums and around brake discs may affect braking efficiency and may damage brake system components.

◆Always perform a maintenance inspection after each day of off-road driving that has taken you through rough terrain, sand, mud, or water. For scheduled maintenance information, refer to the separate "Owner's Manual Supplement/Maintenance Schedule".

## Winter driving tips

Make sure you have ethylene-glycol antifreeze in the radiator.

| NOTICE |
| --- |
| Do not use alcohol type antifreeze. |

Check the condition of the battery and cables.

Cold temperatures reduce the capacity of any battery, so it must be in top shape to provide enough power for winter starting. Chapter 7-3 tells you how to visually inspect the battery. Your Toyota dealer and most service stations will be pleased to check the level of charge.

Make sure the engine oil viscosity is suitable for the cold weather.

See Chapter 7-2 for recommended viscosity. Leaving a heavy summer oil in your vehicle during winter months may cause harder starting. If you are not sure about which oil to use, call your Toyota dealer—he will be pleased to help.

Keep the door locks from freezing.

Squirt lock de-icer or glycerine into the locks to keep them from freezing. To open a frozen lock, try heating the key before inserting it.

Use a washer fluid containing an antifreeze solution.

This product is available at your Toyota dealer and most auto parts stores. Follow the manufacturer's directions for how much to mix with water.

| NOTICE |
| --- |
| Do not use engine antifreeze or any other substitute because it may damage your vehicle's paint. |

Do not use your parking brake when there is a possibility it could freeze.

When parking, put the transmission into "P" (automatic) or into first or reverse (manual) and block the rear wheels. Do not use the parking brake, or snow or water accumulated in and around the parking brake mechanism may freeze, making it hard to release.

Keep ice and snow from accumulating under the fenders.

Ice and snow built up under your fenders can make steering difficult. During bad winter driving, stop and check under the fenders occasionally.

Depending on where you are driving, we recommend you carry some emergency equipment.

Some of the things you might put in the vehicle are tire chains, window scraper, bag of sand or salt, flares, small shovel, jumper cables, etc.

## Trailer towing

Your vehicle is designed primarily as a passenger-and-load-carrying vehicle. Towing a trailer will have an adverse effect on handling, performance, braking, durability and driving economy (fuel consumption, etc.). Your safety and satisfaction depend on the proper use of correct equipment and cautious driving habits. For your safety and the safety of others, you must not overload your vehicle or trailer. Ask your local Toyota dealer for further details before towing.

WEIGHT LIMITS

Before towing, make sure the total trailer weight, gross combination weight, gross vehicle weight, gross axle weight and trailer tongue load are all within the limits.

The total trailer weight and tongue load can be measured with platform scales found at a highway weighing station, building supply company, trucking company, junk yard, etc.

⚠ CAUTION

- The total trailer weight (trailer weight plus its cargo load) must not exceed the following. Exceeding this weight is dangerous. If towing a trailer over 907 kg (2000 lb.), it is necessary to use a sway control device with a sufficient capacity.

  3RZ-FE engine
  1587 kg (3500 lb.)

  5VZ-FE engine
  2267 kg (5000 lb.)

- The gross combination weight (sum of your vehicle weight plus its load and the total trailer weight) must not exceed the following.

  Two-wheel drive models
  3RZ-FE engine
  3447 kg (7600 lb.)

  5VZ-FE engine
  3992 kg (8800 lb.)

  Four-wheel drive models
  3RZ-FE engine
  3583 kg (7900 lb.)

  5VZ-FE engine
  4173 kg (9200 lb.)

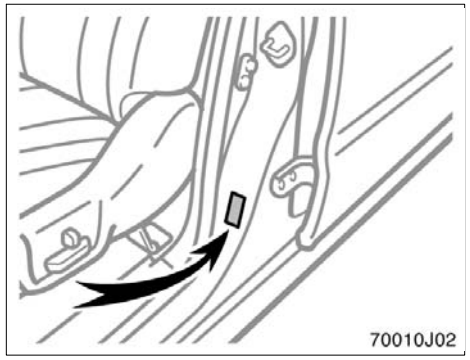


- The gross vehicle weight must not exceed the Gross Vehicle Weight Rating (GVWR) indicated on the Certification Label. The gross vehicle weight is the sum of weights of the unloaded vehicle, driver, passengers, luggage, hitch and trailer tongue load. It also includes the weight of any special equipment installed on your vehicle.
- The load on either the front or rear axle resulting from distribution of the gross vehicle weight on both axles must not exceed the Gross Axle Weight Rating (GAWR) listed on the Certification Label.

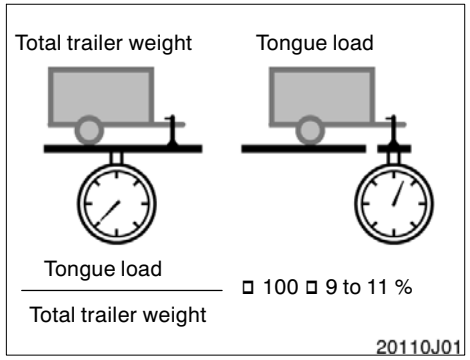


- The trailer cargo load should be distributed so that the tongue load is 9 to 11% of the total trailer weight, not exceeding the maximum of the following. Never load the trailer with more weight in the back than in the front. About 60% of the trailer load should be in the front half of the trailer and the remaining 40% in the rear.

  3RZ-FE engine
  158 kg (350 lb.)
  5VZ-FE engine
  226 kg (500 lb.)

HITCHES

- Use only a weight carrying hitch designed for the total trailer weight. Toyota does not recommend using a weight distribution (load equalizing) hitch.
- The hitch must be bolted securely to the vehicle frame and installed according to the hitch manufacturer's instructions.
- The hitch ball and king pin should have a light coat of grease.
- Toyota recommends removing the hitch when not towing to preventinjury and/or damage due to the hitch in event of a rear end collision. After removal of the hitch, seal the installation area to prevent entry of exhaust fumes and mud.

| NOTICE |
| --- |
| Do not use an axle-mounting hitch as it may cause damage to the axle housing, wheel bearings, wheels and or tires. |

BRAKES AND SAFETY CHAINS

- Toyota recommends trailers with brakes that conform to any applicable federal and state/provincial regulations.

- A safety chain must always be used between the towing vehicle and the trailer. Leave sufficient slack in the chain for turns. The chain should cross under the trailer tongue to prevent the tongue from dropping to the ground in case it becomes damaged or separated. For correct safety chain procedures, follow the hitch or trailer manufacturer's recommendations.

**⚠ CAUTION**

- If the total trailer weight exceeds 453 kg (1000 lb.), trailer brakes are required.
- Never tap into your vehicle's hydraulic system as it would lower its braking effectiveness.
- Never tow a trailer without using a safety chain securely attached to both the trailer and the vehicle. If damage occurs to the coupling unit or hitch ball, there is danger of the trailer wandering over into another lane.

TIRES

- Ensure that your vehicle's tires are properly inflated. See Chapter 7-2 for instructions.
- The trailer tires should be inflated to the pressure recommended by the trailer manufacturer in respect to the total trailer weight.

TRAILER LIGHTS

- Trailer lights must comply with federal, state/provincial and local regulations. See your local recreational vehicle dealer or rental agency for the correct type of wiring and relays for your trailer. Check for correct operation of the turn signals and stop lights each time you hitch up. Direct splicing may damage your vehicle's electrical system and cause a malfunction of your lights.

BREAK-IN SCHEDULE

- Toyota recommends that you do not tow a trailer with a new vehicle or a vehicle with any new power train component (engine, transmission, differential, wheel bearing, etc.) for the first 800 km (500 miles) of driving.

MAINTENANCE

- If you tow a trailer, your vehicle will require more frequent maintenance due to the additional load. For this information, please refer to the scheduled maintenance information in the "Owner's Manual Supplement/Maintenance Schedule".
- Retighten all fixing bolts of the towing ball and bracket after approximately 1000 km (600 miles) of trailer driving.

PRE-TOWING SAFETY CHECK

- Check that your vehicle remains level when a loaded or unloaded trailer is hitched. Do not drive if the vehicle has an abnormal nose-up or nose-down condition, and check for improper tongue load, overload, worn suspension or other possible causes.
- Make sure the trailer cargo is securely loaded so that it cannot shift.
- Check that your rear view mirrors conform to any applicable federal, state/provincial or local regulation. If not, install the rear view mirrors required for towing purpose.

TRAILER TOWING TIPS

When towing a trailer, your vehicle will handle differently than when not towing. The three main causes of vehicle-trailer accidents are driver error, excessive speed and improper trailer loading. Keep these in mind when towing:

- Before starting out, check operation of the lights and all vehicle-trailer connections. After driving a short distance, stop and recheck the lights and connections. Before actually towing a trailer, practice turning, stopping and backing with a trailer in an area away from traffic until you learn the feel.
- Backing with a trailer is difficult and requires practice. Grip the bottom of the steering wheel and move your hand to the left to move the trailer to the left. Move your hand to the right to move the trailer to the right. (This procedure is generally opposite to that when backing without a trailer). Also, just turn the steering wheel a little at a time, avoiding sharp or prolonged turning. Have someone guide you when backing to reduce the risk of an accident.
- Because stopping distance may be increased, vehicle-to-vehicle distance should be increased when towing a trailer. For each 16 km/h (10 mph) of speed, allow at least one vehicle and trailer length between you and the vehicle ahead. Avoid sudden braking as you may skid, resulting in jackknifing and loss of control. This is especially true on wet or slippery surfaces.
- Avoid jerky starts or sudden acceleration. If your vehicle has a manual transmission, prevent excessive clutch slippage by keeping engine rpm low and not racing the engine. Always start out in first gear.
- Avoid jerky steering and sharp turns. The trailer could hit your vehicle in a tight turn. Slow down before making a turn to avoid the necessity of sudden braking.
- Remember that when making a turn, the trailer wheels will be closer than the vehicle wheels to the inside of the turn. Therefore, compensate for this by making a larger than normal turning radius with your vehicle.

- Crosswinds and rough roads will adversely affect handling of your vehicle and trailer, causing sway. Pay attention to the rear from time to time to prepare yourself for being passed by large trucks or buses, which may cause your vehicle and trailer to sway. If swaying happens, firmly grip the steering wheel and reduce speed immediately but gradually. Never increase speed. Steer straight ahead. If you make no extreme correction with the steering or brakes, the vehicle and trailer will stabilize.
- Be careful when passing other vehicles. Passing requires considerable distance. After passing a vehicle, do not forget the length of your trailer and be sure you have plenty of room before changing lanes.
- In order to maintain engine braking efficiency, do not use fifth gear (manual transmission) or overdrive (automatic transmission).
- Because of the added load of the trailer, your vehicle's engine may overheat on hot days (at temperatures over 30°C [85°F]) when going up a long or steep grade with a trailer. If the engine coolant temperature gauge indicates overheating, immediately turn off the airconditioning (if in use), pull off the road and stop in a safe spot. Refer to "If your vehicle overheats" in Part 4 of this manual.
- Always place wheel blocks under both the vehicle and trailer wheels when parking. Apply the parking brake firmly. Put the transmission in "P" (automatic) or in first or reverse (manual). Avoid parking on a slope with a trailer, but if it cannot be avoided, do so only after performing the following:

1. Apply the brakes and hold.
2. Have someone place wheel blocks under both the vehicle and trailer wheels.
3. When the wheel blocks are in place, release your brakes slowly until the blocks absorb the load.
4. Apply the parking brake firmly.
5. Shift into first or reverse (manual) or "P" (automatic) and turn off the engine.

When restarting out after parking on a slope:

1. With the transmission in "P" position (automatic) or the clutch pedal depressed (manual), start the engine. (With an automatic transmission, be sure to keep the brake pedal depressed.)
2. Shift into gear.
3. Release the parking brake (also foot brake on automatic transmission vehicles) and slowly pull or back away from the wheel blocks. Stop and apply your brakes.
4. Have someone retrieve the blocks.

**⚠ CAUTION**

- Do not exceed 72 km/h (45 mph) or the posted towing speed limit, whichever is lower. Because instability (swaying) of a towing vehicle–trailer combination usually increases as the speed increases, exceeding 72 km/h (45 mph) may cause loss of control.

- Slow down and downshift before descending steep or long downhill grades. Do not make sudden downshifts.
- Avoid holding the brake pedal down too long or too frequently. This could cause the brakes to overheat and result in reduced braking efficiency.

## How to save fuel and make your vehicle last longer, too

Getting more kilometers/mileage from a liter/gallon of fuel is easy—just take it easy. It will help make your vehicle last longer, too. Here are some specific tips on how to save money on both fuel and repairs:

- Keep your tires inflated at the correct pressure. Underinflation causes tire wear and wastes fuel. See Chapter 7-2 for instructions.
- Do not carry unneeded weight in your vehicle. Excess weight puts a heavier load on the engine, causing greater fuel consumption.
- Avoid lengthy warm-up idling. Once the engine is running smoothly, begin driving—but gently. Remember, however, that on cold winter days this may take a little longer.
- Accelerate slowly and smoothly. Avoid jackrabbit starts. Get into high gear as quickly as possible.
- Avoid long engine idling. If you have a long wait and you are not in traffic, it is better to turn off the engine and start again later.
- Avoid engine lug or overrevving. Use a gear position suitable for the road on which you are travelling.
- Avoid continuous speeding up and slowing down. Stop-and-go driving wastes fuel.
- Avoid unnecessary stopping and braking. Maintain a steady pace. Try to time the traffic signals so you only need to stop as little as possible or take advantage of through streets to avoid traffic lights. Keep a proper distance from other vehicles to avoid sudden braking. This will also reduce wear on your brakes.
- Avoid heavy traffic or traffic jams whenever possible.
- Do not rest your foot on the clutch or brake pedal. This causes needless wear, overheating and poor fuel economy.
- Maintain a moderate speed on highways. The faster you drive, the greater the fuel consumption. By reducing your speed, you will cut down on fuel consumption.
- Keep the front wheels in proper alignment. Avoid hitting the curb and slow down on rough roads. Improper alignment not only causes faster tire wear but also puts an extra load on the engine, which, in turn, wastes fuel.

- Keep the bottom of your vehicle free from mud, etc. This not only lessens weight but also helps prevent corrosion.
- Keep your vehicle tuned-up and in top shape. A dirty air cleaner, improper valve clearance, dirty plugs, dirty oil and grease, brakes not adjusted, etc. all lower engine performance and contribute to poor fuel economy. For longer life of all parts and lower operating costs, keep all maintenance work on schedule, and if you often drive under severe conditions, see that your vehicle receives more frequent maintenance (For scheduled maintenance information, please refer to the separate "Owner's Manual Supplement/Maintenance Schedule").

**⚠ CAUTION**

Never turn off the engine to coast down hills. Your power steering and brake booster will not function without the engine running. Also, the emission control system operates properly only when the engine is running.

# Part 4
# IN CASE OF AN EMERGENCY

- If your vehicle will not start
- If your engine stalls while driving
- If your vehicle overheats
- If you have a flat tire
- If your vehicle needs to be towed
- If you cannot shift automatic transmission selector lever
- If you lose your keys

## If your vehicle will not start— (a) Simple checks

Before making these checks, make sure you have followed the correct starting procedure given in "How to start the engine" in Part 3 and that you have sufficient fuel.

If the engine is not turning over or is turning over too slowly—

1. Check that the battery terminals are tight and clean.
2. If the battery terminals are O.K., switch on the interior light.
3. If the light is out, dim or goes out when the starter is cranked, the battery is discharged. You may try jump starting. See "(c) Jump starting" for further instructions.

If the light is O.K., but the engine still will not start, it needs adjustment or repair. Call a Toyota dealer or qualified repair shop.

| NOTICE |
| --- |
| Do not pull- or push-start the vehicle. It may damage the vehicle or cause a collision when the engine starts. Also the three-way catalytic converter may overheat and become a fire hazard. |

If the engine turns over at its normal speed but will not start—

1. Check that all the push-on connectors are tight. (For example, connections at the spark plugs, ignition coil and/or distributor)
2. If the connectors are O.K., the engine may be flooded because of repeated cranking. See "(b) Starting a flooded engine" for further instructions.

### (b) Starting a flooded engine

If the engine will not start, your engine may be flooded because of repeated cranking.

If this happens, turn the key to ”START” with the accelerator pedal held down. Keep the key and accelerator pedal so for 15 seconds and release them. Then try starting the engine with your foot off the accelerator pedal.

If the engine does not start after 15 seconds of cranking, release the key, wait a few minutes and try again.

If the engine still will not start, it needs adjustment or repair. Call a Toyota dealer or qualified repair shop for assistance.

**NOTICE**

Do not crank for more than 30 seconds at a time. This may overheat the starter and wiring systems.

### (c) Jump starting

To avoid serious personal injury and damage to your vehicle which might result from battery explosion, acid burns, electrical burns, or damaged electronic components, these instructions must be followed precisely.

If you are unsure about how to follow this procedure, we strongly recommend that you seek the help of a competent mechanic or towing service.

**⚠ CAUTION**

- Batteries contain sulfuric acid which is poisonous and corrosive. Wear protective safety glasses when jump starting, and avoid spilling acid on your skin, clothing, or vehicle.
- If you should accidentally get acid on yourself or in your eyes, remove any contaminated clothing and flush the affected area with water immediately. Then get immediate medical attention. If possible, continue to apply water with a sponge or cloth while en route to the medical office.
- The gas normally produced by a battery will explode if a flame or spark is brought near. Use only standardized jumper cables and do not smoke or light a match while jump starting.

**NOTICE**

The battery used for boosting must be 12 V. Do not jump start unless you are sure that the booster battery is correct.

JUMP STARTING PROCEDURE

1. If the booster battery is installed in another vehicle, make sure the vehicles are not touching. Turn off all unnecessary lights and accessories.
2. If required, remove all the vent plugs from the booster and discharged batteries. Lay a cloth over the open vents on the batteries. (This helps reduce the explosion hazard, personal injuries and burns.)
3. If the engine in the vehicle with the booster battery is not running, start it and let it run for a few minutes. During jump starting run the engine at about 2000 rpm with the accelerator pedal lightly depressed.

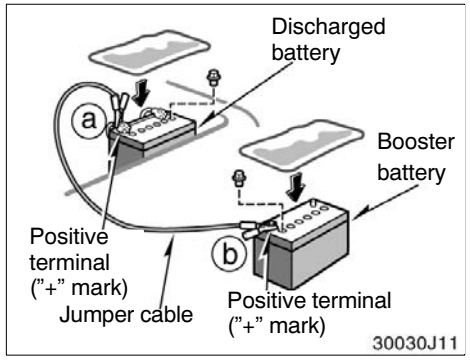


4. Make the cable connections in the order a, b, c, d.

   a. Connect the clamp of the positive (red) jumper cable to the positive (□) terminal on the discharged battery.

   b. Connect the clamp at the other end of the positive (red) jumper cable to the positive (□) terminal on the booster battery.

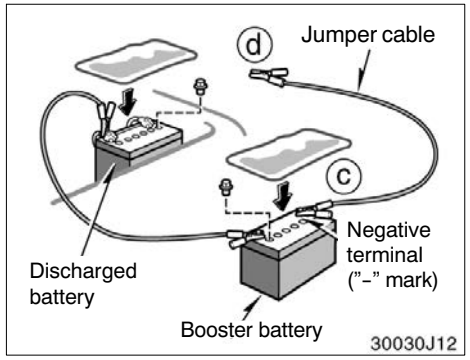


   c. Connect the clamp of the negative (black) jumper cable to the negative (□) terminal on the booster battery.

   d. Connect the clamp at the other end of the negative (black) jumper cable to a solid, stationary, unpainted, metallic point of the vehicle with the discharged battery.

   The recommended connecting points are shown in the following illustrations:

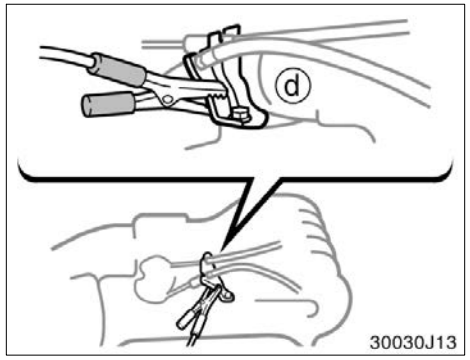

Connecting point for 5VZ-FE engine

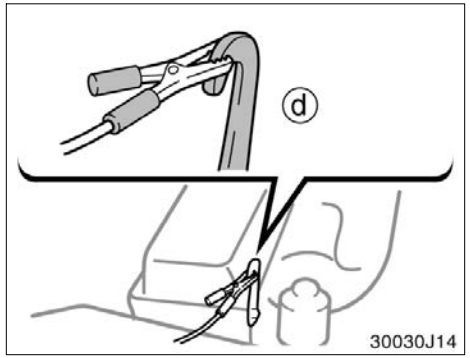

Connecting point for 3RZ-FE engine

Do not connect it to or near any part that moves when the engine is cranked.

**⚠ CAUTION**

When making the connections, to avoid serious injury, do not lean over the battery or accidentally let the jumper cables or clamps touch anything except the correct battery terminals or the ground.

5. Start your engine in the normal way. After starting, run it at about 2000 rpm for several minutes with the accelerator pedal lightly depressed.
6. Carefully disconnect the cables in the exact reverse order: the negative cable and then the positive cable.
7. Carefully dispose of the battery cover cloths—they may now contain sulfuric acid.
8. If removed, replace all the battery vent plugs.

If the cause of your battery discharging is not apparent (for example, lights left on), you should have it checked.

## If your engine stalls while driving

If your engine stalls while driving...

1. Reduce your speed gradually, keeping a straight line. Move cautiously off the road to a safe place.
2. Turn on your emergency flashers.
3. Try starting the engine again.

If the engine will not start, see ”If your vehicle will not start”.

**⚠ CAUTION**

If the engine is not running, the power assist for the brakes and steering will not work so steering and braking will be much harder than usual.

## If your vehicle overheats

If your engine coolant temperature gauge indicates overheating, if you experience a loss of power, or if you hear a loud knocking or pinging noise, the engine has probably overheated. You should follow this procedure...

1. Pull safely off the road, stop the vehicle and turn on your emergency flashers. Put the transmission in "P" (automatic) or neutral (manual) and apply the parking brake. Turn off the air conditioning if it is being used.
2. If coolant or steam is boiling out of the radiator or reservoir, stop the engine. Wait until the steam subsides before opening the hood. If there is no coolant boiling over or steam, leave the engine running.

> ⚠ CAUTION
>
> To help avoid personal injury, keep the hood closed until there is no steam. Escaping steam or coolant is a sign of very high pressure.

3. Visually check to see if the engine drive belt (fan belt) is broken or loose. Look for obvious coolant leaks from the radiator, hoses, and under the vehicle. However, note that water draining from the air conditioning is normal if it has been used.

> ⚠ CAUTION
>
> When the engine is running, keep hands and clothing away from the moving fan and engine drive belts.

4. If the engine drive belt is broken or the coolant is leaking, stop the engine immediately. Call a Toyota dealer for assistance.
5. If the engine drive belt is O.K. and there are no obvious leaks, you may help the engine cool down more quickly by running it at about 1500 rpm for a few minutes with the accelerator pedal lightly depressed.
6. Check the coolant reservoir. If it is dry, add coolant to the reservoir while the engine is running. Fill it about half full.

> ⚠ CAUTION
>
> Do not attempt to remove the radiator cap when the engine and radiator are hot. Serious injury could result from scalding hot fluid and steam blown out under pressure.

7. After the engine coolant temperature has cooled to normal, again check the coolant level in the reservoir. If necessary, bring it up to half full again. Serious coolant loss indicates a leak in the system. You should have it checked as soon as possible at your Toyota dealer.

## If you have a flat tire—

1. Reduce your speed gradually, keeping a straight line. Move cautiously off the road to a safe place well away from the traffic. Avoid stopping on the center divider of a highway. Park on a level spot with firm ground.
2. Stop the engine and turn on your emergency flashers.
3. Firmly set the parking brake and put the transmission in ”P” (automatic) or reverse (manual).
4. Have everyone get out of the vehicle on the side away from traffic.
5. Read the following instructions thoroughly.

**⚠ CAUTION**

When jacking, be sure to observe the following to reduce the possibility of personal injury:

- Follow jacking instructions.
- Do not start or run the engine while your vehicle is supported by the jack.
- Stop the vehicle on a level firm ground, firmly set the parking brake and put the transmission in ”P” (automatic) or reverse (manual). Block the wheel diagonally opposite to the one being changed if necessary.
- Make sure to set the jack properly in the jack point. Raising the vehicle with jack improperly positioned will damage the vehicle or may allow the vehicle to fall off the jack and cause personal injury.
- Never get under the vehicle when the vehicle is supported by the jack alone.
- Use the jack only for lifting your vehicle during wheel changing.
- Do not raise the vehicle with someone in the vehicle.
- When raising the vehicle, do not put an object on or under the jack.
- Raise the vehicle only high enough to remove and change the tire.

**NOTICE**

Do not continue driving with a deflated tire. Driving even a short distance can damage a tire beyond repair.

## —Required tools and spare tire

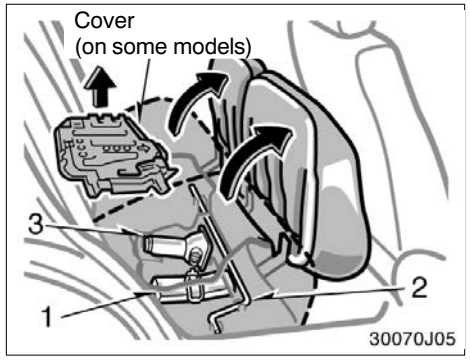


1. Get the required tools and spare tire.
   1. Tool bag
   2. Jack handle
   3. Jack

To prepare yourself for an emergency, you should familiarize yourself with the use of the jack, each of the tools and their storage locations.

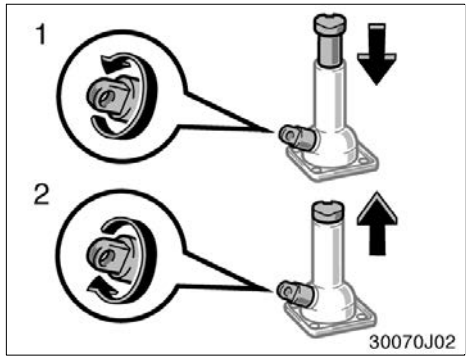


Turn the jack joint by hand.

To remove: Turn the joint in direction 1 until the jack is free.

To store: Turn the joint in direction 2 until the jack is firmly secured to prevent it flying forward during a collision or sudden braking.

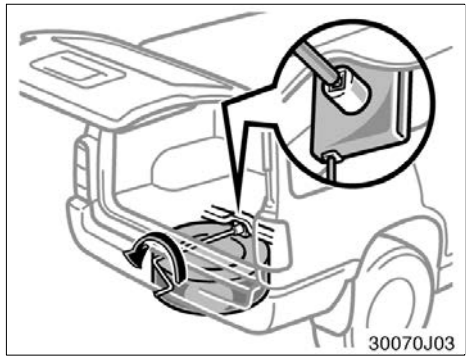


To remove the spare tire:

1. Insert the end of the jack handle into the lowering screw and turn it counterclockwise.
2. After the tire is lowered completely to the ground, remove the holding bracket.

When storing the spare tire, put it in place with the outer side of the wheel facing up. Then secure the tire, taking care that the tire goes straight up without catching on any other part, to prevent it from flying forward during a collision or sudden braking.

## —Blocking the wheel

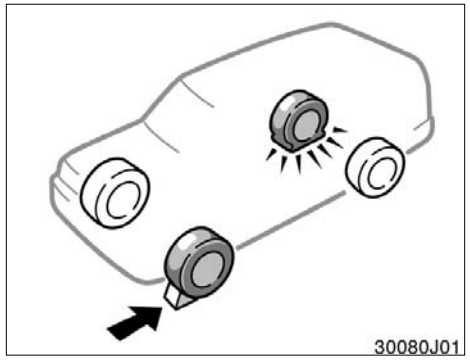


2. Block the wheel diagonally opposite the flat tire to keep the vehicle from rolling when it is jacked up.

When blocking the wheel, place a wheel block from the front for the front wheels or from the rear for the rear wheels.

## —Removing wheel ornament

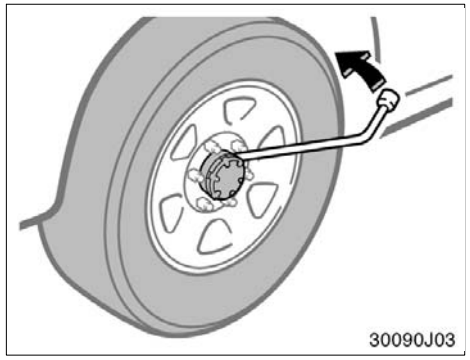


Steel wheels

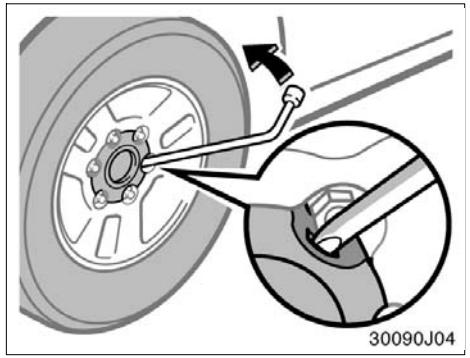


Aluminum wheels

3. Remove the wheel ornament.

Pry off the wheel ornament, using the beveled end of the wheel nut wrench as shown.

**⚠ CAUTION**

Do not try to pull off the ornament by hand. Take due care in handling the ornament to avoid unexpected personal injury.

## —Loosening wheel nuts

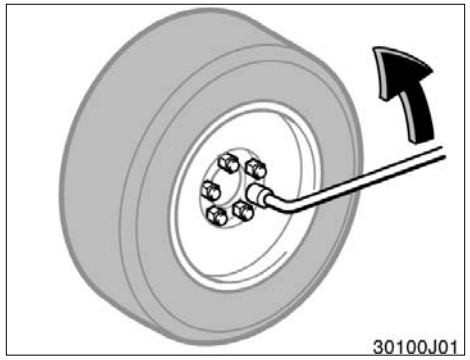


4. Loosen all the wheel nuts.

Always loosen the wheel nuts before raising the vehicle.

The nuts turn counterclockwise to loosen. To get maximum leverage, fit the wrench to the nut so that the handle is on the right side, as shown above. Grab the wrench near the end of the handle and pull up on the handle. Be careful that the wrench does not slip off the nut.

Do not remove the nuts yet—just unscrew them about one-half turn.

## —Positioning the jack

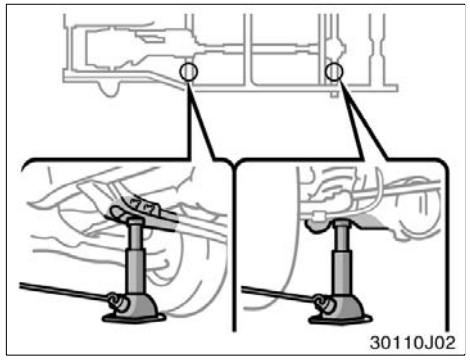


5. Position the jack at the correct jack point as shown.

Make sure the jack is positioned on a level and solid place.

## —Raising your vehicle

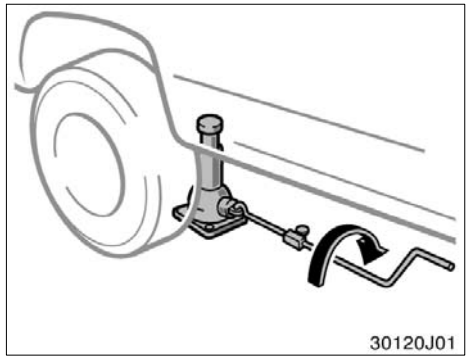


6. After making sure that no one is in the vehicle, raise it high enough so that the spare tire can be installed.

Remember you will need more ground clearance when putting on the spare tire than when removing the flat tire.

To raise the vehicle, insert the jack handle extension in to the jack (it is a loose fit) and turn it clockwise with the handle, making sure the handle remains firmly fitted onto the jack handle extension. As the jack touches the vehicle and begins to fit, double-check that it is properly positioned.

## —Changing wheels

**⚠ CAUTION**

Never get under the vehicle when the vehicle is supported by the jack alone.

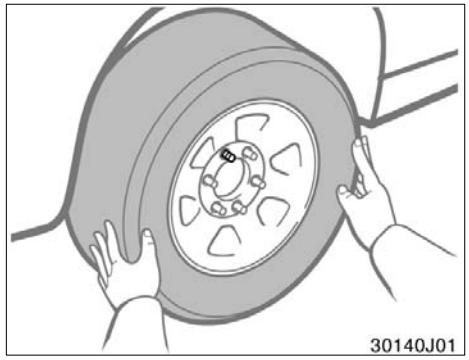

7. Remove the wheel nuts and change tires.

Lift the flat tire straight off and put it aside.

Roll the spare wheel into position and align the holes in the wheel with the bolts. Then lift up the wheel and get at least the top bolt started through its hole. Wiggle the tire and press it back over the other bolts.

Before putting on wheels, remove any corrosion on the mounting surfaces with a wire brush or such. Installation of wheels without good metal-to-metal contact at the mounting surface can cause wheel nuts to loosen and eventually cause a wheel to come off while driving. Therefore after the first 1600 km (1000 miles), check to see that the wheel nuts are tight.

## —Reinstalling wheel nuts

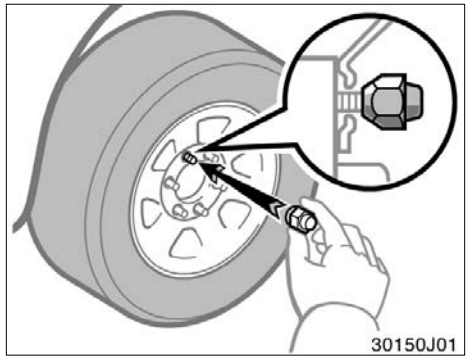


8. Reinstall all the wheel nuts finger tight.

Reinstall the wheel nuts (tapered end inward) and tighten them as much as you can by hand. Press back on the tire back and see if you can tighten them more.

## —Lowering your vehicle

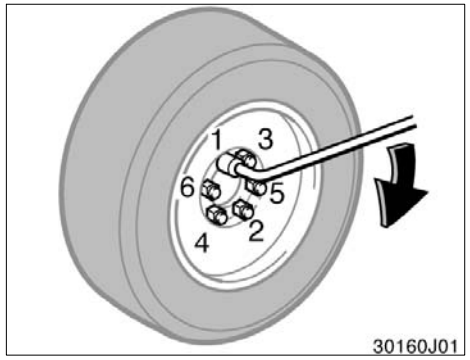


9. Lower the vehicle completely and tighten the wheel nuts.

Turn the jack handle extension counterclockwise with handle to lower the vehicle, making sure the handle remains firmly fitted onto the jack handle extension.

Use only the wheel nut wrench and turn it clockwise to tighten the nuts. Do not use other tools or any additional leverage other than your hands, such as a hammer, pipe or your foot. Make sure the wrench is securely engaged over the nut.

Tighten each nut a little at a time in the order shown. Repeat the process until all the nuts are tight.

**⚠ CAUTION**

When lowering the vehicle, make sure all portions of your body and all other persons around will not be injured as the vehicle is lowered to the ground.

## —Reinstalling wheel ornament

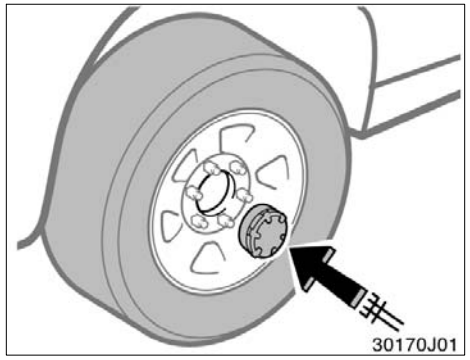


10. Reinstall the wheel ornament.

Put the wheel ornament into position and then tap it firmly with the side or heel of your hand to snap it into place.

> ⚠ CAUTION
>
> Take due care in handling the ornament to avoid unexpected personal injury.

## —After changing wheels

11. Check the air pressure of the replaced tire.

Adjust the air pressure to the specification designated in Part 8. If the pressure is lower, drive slowly to the nearest service station and fill to the correct pressure.

Do not forget to reinstall the tire inflation valve cap as dirt and moisture could get into the valve core and possibly cause air leakage. If the cap is missing, have a new one put on as soon as possible.

12. Restore all the tools, jack and flat tire securely.

As soon as possible after changing wheels, tighten the wheel nuts to the torque specified in Part 8 with a torque wrench and have a technician repair the flat tire.

> ⚠ CAUTION
>
> Before driving, make sure all the tools, jack and flat tire are securely in place in their storage location to reduce the possibility of personal injury during a collision or sudden braking.

## If your vehicle needs to be towed—

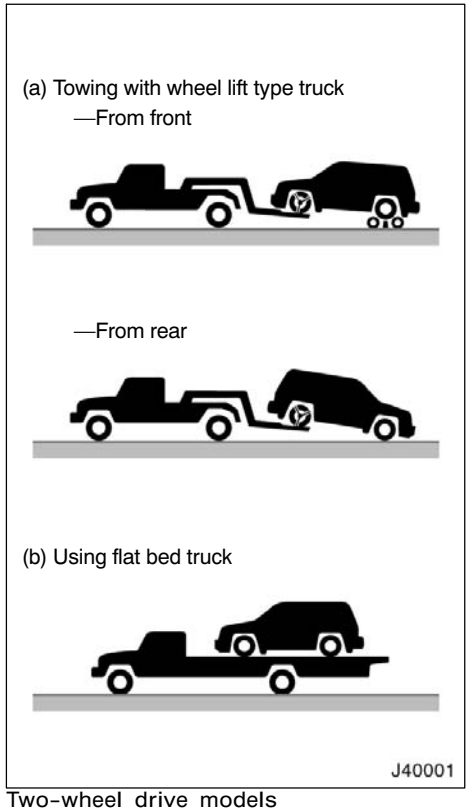


Two-wheel drive models

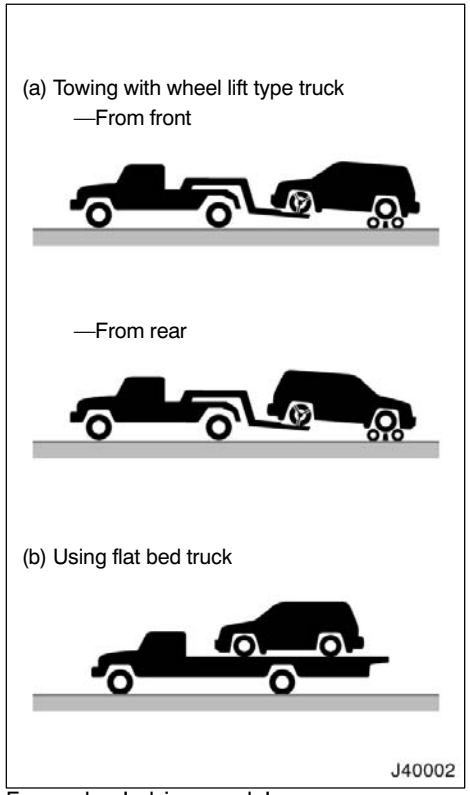

Four-wheel drive models

If towing is necessary, we recommended you to have it done by your Toyota dealer or a commercial tow truck service. In consultation with them, have your vehicle towed using either (a) or (b).

Only when you cannot receive a towing service from a Toyota dealer or commercial tow truck service, tow your vehicle carefully in accordance with the instructions given in "—Emergency towing" in this Part.

Proper equipment will help ensure that your vehicle is not damaged while being towed. Commercial operators are generally aware of the state/provincial and local laws pertaining to towing.

Your vehicle can be damaged if it is towed incorrectly. Although most operators know the correct procedure, it is possible to make a mistake. To avoid damage to your vehicle, make sure the following few precautions are observed. If necessary, show this page to the tow truck driver.

TOWING PRECAUTIONS:

Use a safety chain system for all towing, and abide by the state/provincial and local laws. The wheels and axle on the ground must be in good condition. If they are damaged, use a towing dolly.

Two-wheel drive models—

(a) Towing with wheel lift type truck

From front—

- Manual transmission:

  We recommend using a towing dolly under the rear wheels. If you do not use a towing dolly, release the parking brake and put the transmission in neutral.

- Automatic transmission:

  Use a towing dolly under the rear wheels.

| NOTICE |
| --- |
| Never tow a vehicle with an automatic transmission from the front with the rear wheels on the ground, as this may cause serious damage to the transmission. |

From rear—Place the ignition key in the ”ACC” position.

NOTICE

◆When lifting wheels, take care to ensure adequate ground clearance for towing at the opposite end of the raised vehicle. Otherwise, the bumper and/or underbody of the towed vehicle will be damaged during towing.

◆Do not tow with the key removed or in the ”LOCK” position, as the steering lock mechanism is not strong enough to hold the front wheels straight while towing.

(b) Using flat bed truck

Four-wheel drive models—

(a) Towing with wheel lift type truck

From front—

- Manual transmission:

  We recommend using a towing dolly under the rear wheels. If you do not use a towing dolly, release the parking brake, put the transmission in neutral and the transfer in ”H2”.

- Automatic transmission:

  Use a towing dolly under the rear wheels.

NOTICE

Never tow a vehicle with an automatic transmission from the front with the rear wheels on the ground, as this may cause serious damage to the transmission.

From rear—We recommend using a towing dolly under the front wheels. If you do not use a towing dolly, place the ignition key in the ”ACC” position, put the transmission in neutral and the transfer in ”H2”.

NOTICE

Do not tow with the key removed or in the ”LOCK” position when towing from the rear without a towing dolly. The steering lock mechanism is not strong enough to hold the front wheels straight.

(b) Using flat bed truck

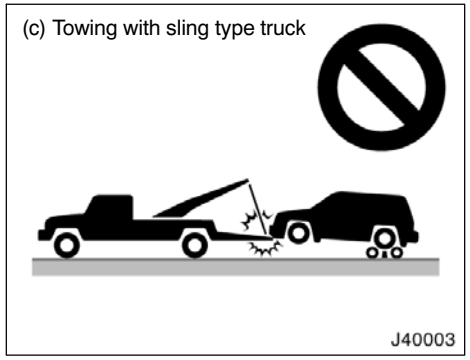


All models—

(c) Towing with sling type truck

| NOTICE |
| --- |
| Do not tow with sling type truck, either from the front or rear. This may cause body damage. |

## —Emergency towing

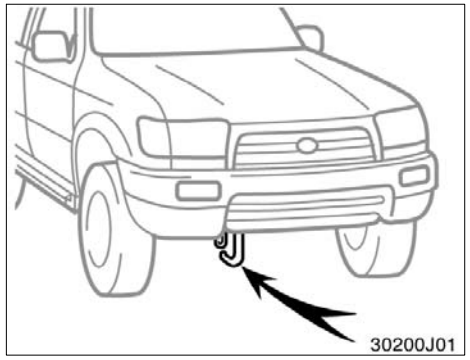


If towing is necessary, we recommend you to have it done by your Toyota dealer or a commercial tow truck service.

If towing service is not available in an emergency, your vehicle may be temporarily towed by a cable or chain secured to the emergency towing hook. Use extreme caution when towing vehicles.

A driver must be in the vehicle to steer it and operate the brakes.

Towing in this manner may be done only on hard-surfaced roads for a short distance and at low speeds. Also, the wheels, axles, drive train, steering and brakes must all be in good condition.

| ⚠ CAUTION |
| --- |
| Use extreme caution when towing vehicles. Avoid sudden starts or erratic driving maneuvers which would place excessive stress on the emergency towing hook and towing cable or chain. The hook and towing cable or chain may break and cause serious injury or damage. |

| NOTICE |
| --- |
| Use only a cable or chain specifically intended for use in towing vehicles. Securely fasten the cable or chain to the towing hook provided. |

Before towing, release the parking brake and put the transmission in neutral (manual) or "N" (automatic) and the transfer in "H2" (four-wheel drive models). The key must be in "ACC" (engine off) or "ON" (engine running).

⚠ CAUTION

If the engine is not running, the power assist for the brakes and steering will not work so steering and braking will be much harder than usual.

## —Emergency towing hook precautions

- Before emergency towing, check that the hook is not broken or damaged and that the installation bolts are not loose.
- Fasten the towing cable or chain securely to the hook.
- Do not jerk the hook. Apply steady and even force.
- To avoid damaging the hook, do not pull from the side or at a vertical angle. Always pull straight ahead.

⚠ CAUTION

If the emergency towing eyelet is used to get out when your vehicle becomes struck in mud, sand or other condition from which the vehicle cannot be driven out under its own power, make sure to observe the precautions mentioned below. Otherwise, excessive stress will be put on the eyelet and the towing cable or chain may break, causing serious injury or damage.

- If the towing vehicle can hardly move, do not forcibly continue the towing. Contact your Toyota dealer or a commercial tow truck service for assistance.
- Tow the vehicle as straight ahead as possible.
- Keep away from the vehicle during towing.

## —Tips for towing a stuck vehicle

The following methods are effective to get out when your vehicle is struck in mud, sand or other condition from which the vehicle cannot be driven out under its own power. Use extreme caution when towing vehicles. In addition, keep away from the vehicles and towing cable or chain when towing.

- Remove the soil and sand in the front and the back of the tires.
- Place a stone or wood under the tires.

## If you cannot shift automatic transmission selector lever (two-wheel drive models)

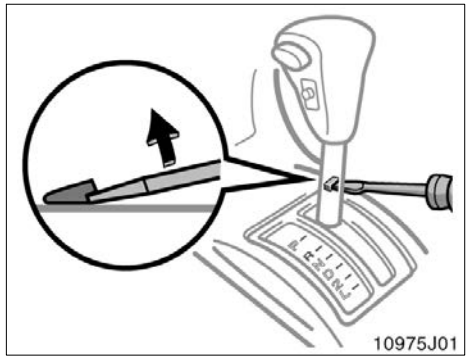


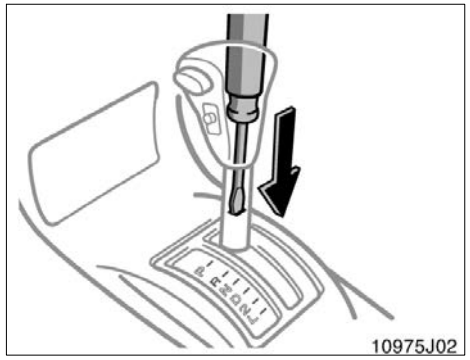


If you cannot shift the selector lever out of ”P” position to other positions even though the brake pedal is depressed, use the shift lock override button as follows:

1. Turn the ignition key to ”LOCK” position. Make sure the parking brake is set.
2. Pry up the cover with a flat-bladed screwdriver or equivalent.
3. Insert the screwdriver or equivalent into the hole to push down the shift lock override button. You can shift out of ”P” position only while pushing the button.
4. Shift into ”N” position.
5. Insert the cover.
6. Start the engine. For your safety, keep the brake pedal depressed.

Be sure to have the system checked by your Toyota dealer as soon as possible.

## If you cannot shift automatic transmission selector lever (four-wheel drive models)

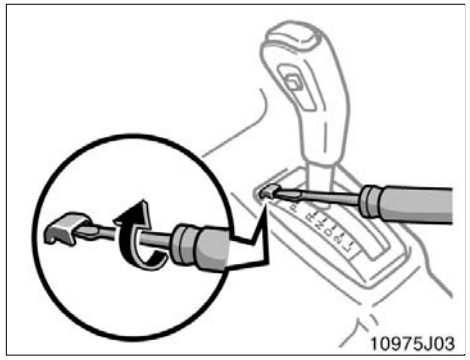


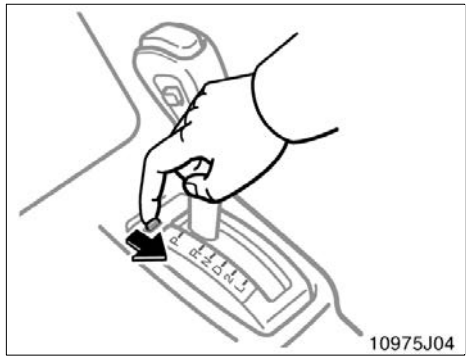


If you cannot shift the selector lever out of "P" position to other positions even though the brake pedal is depressed, use the shift lock override button as follows:

1. Turn the ignition key to "LOCK" position. Make sure the parking brake is set.
2. Pry up the cover with a flat-bladed screwdriver or equivalent.
3. Insert your finger into the hole to move the shift lock overdrive lever backward. You can shift out of "P" position only while holding back the lever.
4. Shift into "N" position.
5. Insert the cover.
6. Start the engine. For your safety, keep the brake pedal depressed.

Be sure to have the system checked by your Toyota dealer as soon as possible.

## If you lose your keys

Many Toyota dealers can make a new key if you can give them the key number.

See the suggestion given in "Keys" in Chapter 1-2.

If your keys are locked in the vehicle and you cannot get a duplicate, many Toyota dealers can still open the door for you, using their special tools. If you must break a window to get in, we suggest breaking the smallest side window because it is the least expensive to replace. Be extremely cautious to avoid cuts from the glass.

# Part 5 CORROSION PREVENTION AND APPEARANCE CARE

- Protecting your Toyota from corrosion
- Washing and waxing your Toyota
- Cleaning the interior

## Protecting your Toyota from corrosion

Toyota, through its diligent research, design and use of the most advanced technology available, has done its part to help prevent corrosion and has provided you with the finest quality vehicle construction. Now, it is up to you. Proper care of your Toyota can help ensure long-term corrosion prevention.

The most common causes of corrosion to your vehicle are:

- The accumulation of road salt, dirt and moisture in hard-to-reach areas under the vehicle.
- Chipping of paint, or undercoating caused by minor accidents or by stones and gravel.

Care is especially important if you live in particular areas or operate your vehicle under certain environmental conditions:

- Road salt or dust control chemicals will accelerate corrosion, as will the presence of salt in the air near the seacoast or in areas of industrial pollution.
- High humidity accelerates corrosion especially when temperatures range just above the freezing point.
- Wetness or dampness to certain parts of your vehicle for an extended period of time, may cause corrosion even though other parts of the vehicle may be dry.
- High temperatures will cause corrosion to those components of the vehicle which are prevented from quick-drying due to lack of proper ventilation.

The above signifies the necessity to keep your vehicle, particularly the underside, as clean as possible and to repair any damage to paint or protective coatings as soon as possible.

To help prevent corrosion on your Toyota, follow these guidelines:

Wash your vehicle frequently. It is, of course, necessary to keep your vehicle clean by regular washing, but to prevent corrosion, the following points should be observed:

- If you drive on salted roads in the winter or if you live near the ocean, you should hose off the undercarriage at least once a month to minimize corrosion.

- High pressure water or steam is effective for cleaning the vehicle's underside and wheel housings. Pay particular attention to these areas as it is difficult to see all the mud and dirt. It will do more harm than good to simply wet the mud and debris without removing them. The lower edge of doors, rocker panels and frame members have drain holes which should not be allowed to clog with dirt as trapped water in these areas can cause corrosion.
- Wash the underside of the vehicle thoroughly when winter is over.

See "Washing and waxing your Toyota" for more tips.

**Check the condition of your vehicle's paint and trim.** If you find any chips or scratches in the paint, touch them up immediately to prevent corrosion from starting. If the chips or scratches have gone through the bare metal, have a qualified body shop make the repair.

**Check the interior of your vehicle.** Water and dirt can accumulate under the floor mats and could cause corrosion. Occasionally check under the mats to make sure the area is dry. Be particularly careful when transporting chemicals, cleansers, fertilizers, salt, etc; these should be transported in proper containers. If a spill or leak should occur, immediately clean and dry the area.

**Use mud shields on your wheels.** If you drive on salted or gravel roads, mud shields help protect your vehicle. Full-size shields, which come as near to the ground as possible, are the best. We recommend that the fittings and the area where the shields are installed be treated to resist corrosion. Your Toyota dealer will be happy to assist in supplying and installing the shields if they are recommended for your area.

**Keep your vehicle in a well ventilated garage or a roofed place.** Do not park your vehicle in a damp, poorly ventilated garage. If you wash your vehicle in the garage, or if you drive it in covered with water or snow, your garage may be so damp it will cause corrosion. Even if your garage is heated, a wet vehicle can corrode if the ventilation is poor.

## Washing and waxing your Toyota

### Washing your Toyota

**Keep your vehicle clean by regular washing.**

The following cases may cause weakness to the paint or corrosion to the body and parts. Wash your vehicle as soon as possible.

- When driving in a coastal area
- When driving on a road sprinkled with antifreeze
- When having stuck of coal tar, tree sap, bird droppings and carcass of an insect
- when driving in the areas where there are a lot of smoke, soot, dust, iron dust and chemical substance
- When the vehicle becomes remarkably dirty with dust and mud

### Hand-washing your Toyota

**Work in the shade and wait until the vehicle body is not hot to the touch.**

⚠ CAUTION

When cleaning under floor or chassis, be careful not to injure your hands.

1. Rinse off loose dirt with a hose. Remove any mud or road salt from the underside of the vehicle or in the wheel wells.
2. Wash with a mild car-wash soap, mixed according to the manufacturer's instructions. Use a soft cotton mitt and keep it wet by dipping it frequently into the wash water. Do not rub hard—let the soap and water remove the dirt.

Aluminum wheels: Use only a mild soap or neutral detergent.

Road tar: Remove with turpentine or cleaners that are marked safe for painted surfaces.

| NOTICE |
| --- |
| Do not use gasoline or strong solvents, which may be toxic or cause damage. |

3. Rinse thoroughly—dried soap can cause streaking. In hot weather you may need to rinse each section right after you wash it.
4. To prevent water spots, dry the vehicle using a clean soft cotton towel. Do not rub or press hard—you might scratch the paint.

### Automatic car wash

Your vehicle may be washed in an automatic car wash, but remember that the paint can be scratched by some type of brushes, unfiltered washing water, or the washing process itself. Scratching reduces paint durability and gloss, especially on darker colors. The manager of the car wash should be able to advise you whether the process is safe for the paint on your vehicle.

| NOTICE |
| --- |
| To prevent damage to the antenna, make sure it is retracted before driving your Toyota through an automatic car wash. On models with detachable antenna, remove the antenna before using an automatic car wash. |

### Waxing your Toyota

Polishing and waxing is recommended to maintain the original beauty of your Toyota's finish.

Once a month or if the vehicle does not repel water well, apply wax.

1. Always wash and dry the vehicle before you begin waxing, even if you are using a combined cleaner and wax.
2. Use a good quality polish and wax. If the finish has become extremely weathered, use a car-cleaning polish, followed by a separate wax. Carefully follow the manufacturer's instructions and precautions. Be sure to polish and wax the chrome trim as well as the paint.
3. Wax the vehicle again when water does not bead but remains on the surface in large patches.

## Cleaning the interior

**⚠ CAUTION**

Do not wash the vehicle floor with water, or allow water to get onto the floor when cleaning the vehicle interior or exterior. Water may get into audio components or other electrical components above or under the floor carpet (or mat) and cause a malfunction; and it may cause body corrosion.

### Vinyl interior

The vinyl upholstery may be easily cleaned with a mild soap or detergent and water.

First vacuum over the upholstery to remove loose dirt. Then, using a sponge or soft cloth, apply the soap solution to the vinyl. After allowing it to soak in for a few minutes to loosen the dirt, remove the dirt and wipe off the soap with a clean damp cloth. If all the dirt does not come off, repeat the procedure. Commercial foaming-type vinyl cleaners are also available which work well. Follow the manufacturer's instructions.

**NOTICE**

Do not use solvent, thinner, gasoline or window cleaner on the interior.

### Carpets

Use a good foam-type shampoo to clean the carpets.

Begin by vacuuming thoroughly to remove as much dirt as possible. Several types of foam cleaners are available; some are in aerosol cans and others are powders or liquids which you mix with water to produce a foam. To shampoo the carpets, use a sponge or brush to apply the foam. Rub in overlapping circles.

Do not apply water—the best results are obtained by keeping the carpet as dry as possible. Read the shampoo instructions and follow them closely.

### Seat belts

The seat belts may be cleaned with mild soap and water or with lukewarm water.

Use a cloth or sponge. As you are cleaning, check the belts for excessive wear, fraying, or cuts.

**NOTICE**

Do not use dye or bleach on the belts—it may weaken them.

### Windows

The windows may be cleaned with any household window cleaner.

**NOTICE**

When cleaning the inside of the windows, be careful not to scratch or damage the heater wires on the rear window.

### Air conditioning control panel, car audio, instrument panel, console panel, and switches

Use a soft damp cloth for cleaning.

Soak a clean soft cloth in water or lukewarm water then lightly wipe off any dirt.

NOTICE

- Do not use organic substances (solvents, kerosene, alcohol, gasoline, etc.) or alkaline or acidic solutions. These chemicals can cause discoloring, staining or peeling of the surface.
- If you use cleaners or polishing agents, make sure their ingredients do not include the substances mentioned above.
- If you use a liquid car freshener, do not apill the liquid onto the vehicle's interior surfaces. It may contain the ingredients mentioned above. Immediately clean any spill using the method mentioned above.

Leather Interior

The leather upholstery may be cleaned with neutral detergent for wool.

Remove dirt using a soft cloth dampened with 5% solution of neutral detergent for wool. Then thoroughly wipe off all traces of detergent with a clean damp cloth.

After cleaning or whenever any part of the leather gets wet, dry with a soft clean cloth. Allow the leather to dry in a ventilated shaded area.

NOTICE

- If a stain should fail to come out with a neutral detergent, apply a cleaner that does not contain an organic solvent.
- Never use organic substances such as benzine, alcohol or gasoline, or alkaline or acid solutions for cleaning the leather as these could cause discoloring.
- Use of a nylon brush or synthetic fiber cloth, etc. may scratch the fine grained surface of the leather.
- Mildew may develop on soiled leather upholstery. Be especially careful to avoid oil spots. Try to keep your upholstery always clean.
- Long exposure to direct sunlight may cause the leather surface to harden and shrink. Keep your vehicle in a shaded area, especially in the summer.
- The interior of your vehicle is apt to heat up on hot summer days, so avoid placing on the upholstery items made of vinyl or plastic or containing wax as these tend to stick to leather when warm.
- Improper cleaning of the leather upholstery could result in discoloration or staining.

If you have any questions about the cleaning of your Toyota, your local Toyota dealer will be pleased to answer them.

# Part 6 VEHICLE MAINTENANCE AND CARE

- Maintenance requirements
- General maintenance
- Does your vehicle need repairing?

For scheduled maintenance information, please refer to the separate "Owner's Manual Supplement/Maintenance Schedule".

## Maintenance requirements

Your Toyota vehicle has been designed to for fewer maintenance requirements with longer service intervals to save both your time and money. However, each regular maintenance, as well as day-to-day care, is more important than ever before to ensure smooth, and trouble-free, safe, and economical drivings.

It is the owner's responsibility to make sure the specified maintenance, including general maintenance service, is performed. Note that both the new vehicle and emission control system warranties specify that proper maintenance and care must be performed. See "Owner's Guide", "Owner's Manual Supplement" or "Warranty Booklet" for complete warranty information.

### General maintenance

General maintenance items are those day-to-day care practices that are important to your vehicle for proper operation. It is the owner's responsibility to ensure that the general maintenance items are performed regularly.

These checks or inspections can be done either by yourself or a qualified technician, or if you prefer, your Toyota dealer will be pleased to do them at a nominal cost.

### Scheduled maintenance

The scheduled maintenance items listed in the "Owner's Manual Supplement/Maintenance Schedule" are those required to be serviced at regular intervals.

For details of your maintenance schedule, read the separate "Owner's Manual Supplement/Maintenance Schedule".

It is recommended that any replacement parts used for maintenance or for the repair of the emission control system be Toyota supplied.

The owner may elect to use non-Toyota supplied parts for replacement purposes without invalidating the emission control system warranty. However, use of replacement parts which are not of equivalent quality may impair the effectiveness of the emission control systems.

You may also elect to have maintenance, replacement, or repair of the emission control devices and system performed by any automotive repair establishment or individual without invalidating this warranty. See "Owner's Guide", "Owner's Manual Supplement" or "Warranty Booklet" for complete warranty information.

### Where to go for service?

Toyota technicians are well-trained specialists and are kept up to date with the latest service information through technical bulletins, service tips, and in-dealership training programs. They learn to work on Toyotas before they work on your vehicle, rather than while they are working on it.

You can be confident that your Toyota dealer's service department performs the best job to meet the maintenance requirements on your vehicle—reliably and economically.

Your copy of the repair order is proof that all required maintenance has been performed for warranty coverage. And if any problems should arise with your vehicle while under warranty, your Toyota dealer will promptly take care of it. Again, be sure to keep a copy of the repair order for any service performed on your Toyota.

### What about do-it-yourself maintenance?

Many of the maintenance items are easy to do yourself if you have a little mechanical ability and a few basic automotive tools. Simple instructions for how to perform them are presented in Part 7.

If you are a skilled do-it-yourself mechanic, the Toyota service manuals are recommended. Please be aware that do-it-yourself maintanance can affect your warranty coverage. See "Owner's Guide", "Owner's Manual Supplement" or "Warranty Booklet" for the details.

## General maintenance

Listed below are the general maintenance items that should be performed as frequently as specified. In addition to checking the items listed, if you notice any unusual noise, smell or vibration, you should investigate the cause or take your vehicle to your Toyota dealer or a qualified service shop immediately. It is recommended that any problem you notice be brought to the attention of your dealer or the qualified service shop for their advice.

**⚠ CAUTION**

Make these checks only where adequate ventilation can be obtained if you run the engine.

OUTSIDE THE VEHICLE

Items listed below should be performed from time to time, unless otherwise specified.

Tire pressure
Check the pressure with a gauge every two weeks, or at least once a month. See Chapter 7-2 for additional information.

### Tire surface and wheel nuts
Check the tires carefully for cuts, damage or excessive wear. See Chapter 7-2 for additional information. When checking the tires, make sure no nuts are missing, and check the nuts for looseness. Tighten them if necessary.

### Tire rotation
Rotate the tires every 12000 km (7500 miles). See Chapter 7-2 for additional information.

### Fluid leaks
Check underneath for leaking fuel, oil, water or other fluid after the vehicle has been parked for a while. If you smell fuel fumes or notice any leak, have the cause found and corrected immediately.

### Doors and engine hood
Check that all doors including back door operate smoothly and all latches lock securely. Make sure the engine hood secondary latch secures the hood from opening when the primary latch is released.

## INSIDE THE VEHICLE

Items listed below should be checked regularly, e.g. while performing periodic services, cleaning the vehicle, etc.

### Lights
Make sure the headlights, stop lights, tail lights, turn signal lights, and other lights are all working. Check headlight aim.

### Service reminder indicators and warning buzzers
Check that all service reminder indicators and warning buzzers function properly.

### Steering wheel
Check that it has the specified freeplay. Be alert for changes in steering condition, such as hard steering or strange noise.

### Seats
Check that all seat controls such as seat adjusters, seatback recliner, etc. operate smoothly and that all latches lock securely in any position. Check that the head restraint move up and down smoothly and that the locks hold securely in any latched position. For folding-down rear seatbacks, swing-up rear seat cushions and detachable temporary third seat, check that the latches lock securely.

### Seat belts
Check that the seat belt system such as buckles, retractors and anchors operate properly and smoothly. Make sure the belt webbing is not cut, frayed, worn or damaged.

### Accelerator pedal
Check the pedal for smooth operation and uneven pedal effort or catching.

### Clutch pedal
Check the pedal for smooth operation.

### Brake pedal
Check the pedal for smooth operation and that the pedal has the proper clearance. Check the brake booster function.

### Brakes
At a safe place, check that the brakes do not pull to one side when applied.

### Parking brake
Check that the lever has the proper travel and that, on a safe incline, your vehicle is held securely with only the parking brake applied.

Automatic transmission "Park" mechanism
Check the lock release button of the selector lever for proper and smooth operation. On a safe incline, check that your vehicle is held securely with the selector lever in "P" position and all brakes released.

IN THE ENGINE COMPARTMENT

Items listed below should be checked from time to time, e.g. each time when refueling.

Washer fluid
Make sure there is sufficient fluid in the tank. See Chapter 7-3 for additional information.

Engine coolant level
Make sure the coolant level is between the "FULL" and "LOW" lines on the see-through reservoir when the engine is cold. See Chapter 7-2 for additional information.

Battery electrolyte level
Make sure the electrolyte level of all battery cells is between upper and lower level lines on the case. Add only distilled water when replenishing. See Chapter 7-3 for additional information.

Brake fluid level
Make sure the brake fluid level is correct. See Chapter 7-2 for additional information.

Engine oil level
Check the level on the dipstick with the engine turned off and the vehicle parked on a level spot. See Chapter 7-2 for additional information.

Power steering fluid level
Check the level through the reservoir. The level should be in the "HOT" or "COLD" range depending on the fluid temperature. See Chapter 7-2 for additional information.

Exhaust system
If you notice any change in the sound of the exhaust or smell exhaust fumes, have the cause located and corrected immediately. (See engine exhaust cautions in Part 2.)

## Does your vehicle need repairing?

Be on the alert for changes in performance, sounds, and visual tip-offs that indicate service is needed. Some important clues are as follows:

- Engine missing, stumbling, or pinging
- Appreciable loss of power
- Strange engine noises
- A leak under the vehicle (however, water dripping from the air conditioning after use is normal.)
- Change in exhaust sound (This may indicate a dangerous carbon monoxide leak. Drive with the windows open and have the exhaust system checked immediately.)
- Flat-looking tire; excessive tire squeal when cornering; uneven tire wear
- Vehicle pulls to one side when driving straight on a level road
- Strange noises related to suspension movement
- Loss of brake effectiveness; spongy feeling brake or clutch pedal; pedal almost touches floor; vehicle pulls to one side when braking
- Engine coolant temperature continually higher than normal

If you notice any of these clues, take your vehicle to your Toyota dealer as soon as possible. It probably needs adjustment or repair.

**⚠ CAUTION**

Do not continue driving with the vehicle unchecked. It could result in serious vehicle damage and possibly personal injury.

# Part 7
# DO-IT-YOURSELF MAINTENANCE—

## Chapter 7-1
## Introduction

- Engine compartment overview
- Fuse locations
- Do-it-yourself service precautions
- Parts and tools

## Engine compartment overview

▶3RZ-FE engine

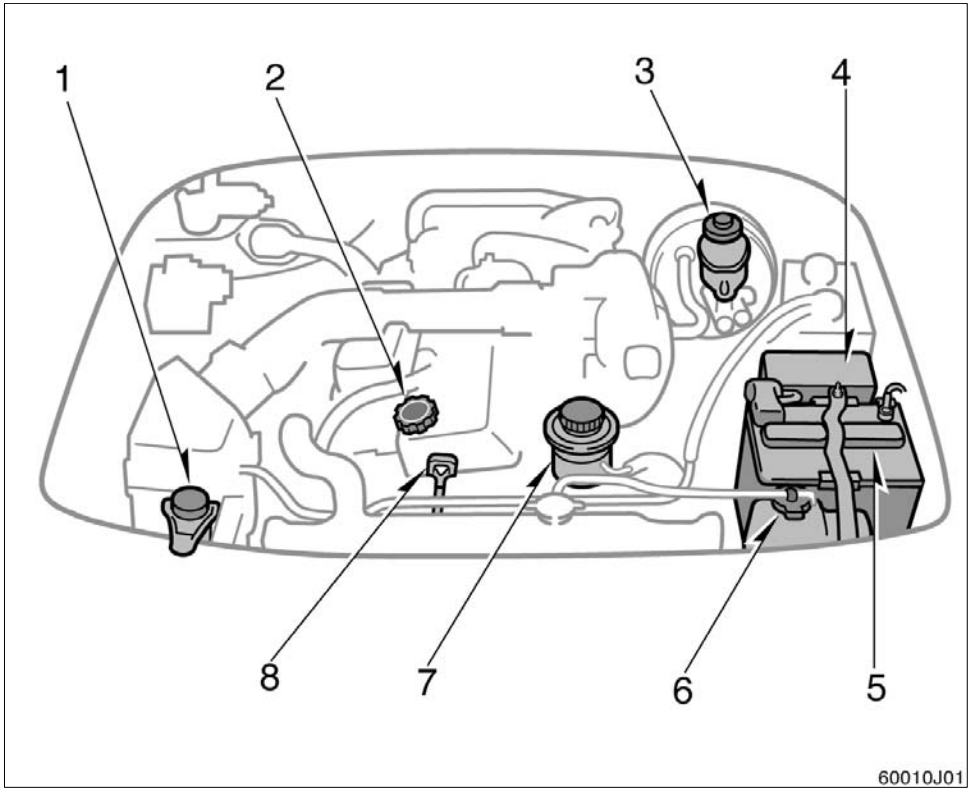


1. Windshield and back window washer fluid tank
2. Engine oil filler cap
3. Brake fluid reservoir
4. Fuse block
5. Battery
6. Engine coolant reservoir
7. Power steering fluid reservoir
8. Engine oil level dipstick

▶5VZ-FE engine

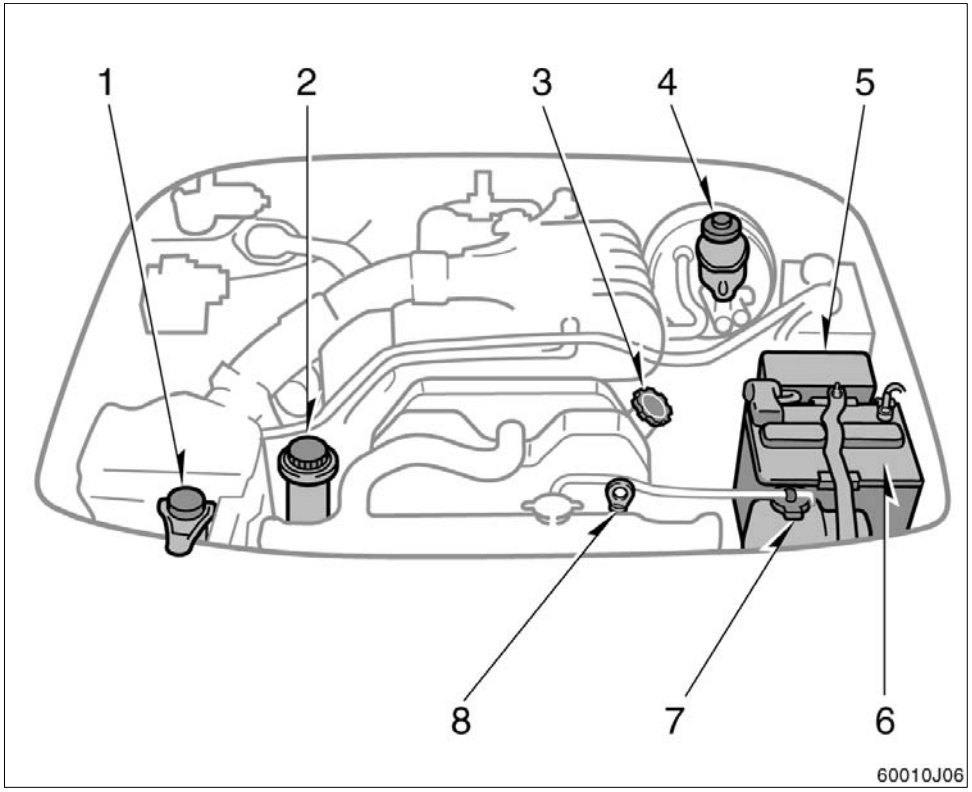


1. Windshield and back window washer fluid tank
2. Power steering fluid reservoir
3. Engine oil filler cap
4. Brake fluid reservoir
5. Fuse block
6. Battery
7. Engine coolant reservoir
8. Engine oil level dipstick

## Fuse locations

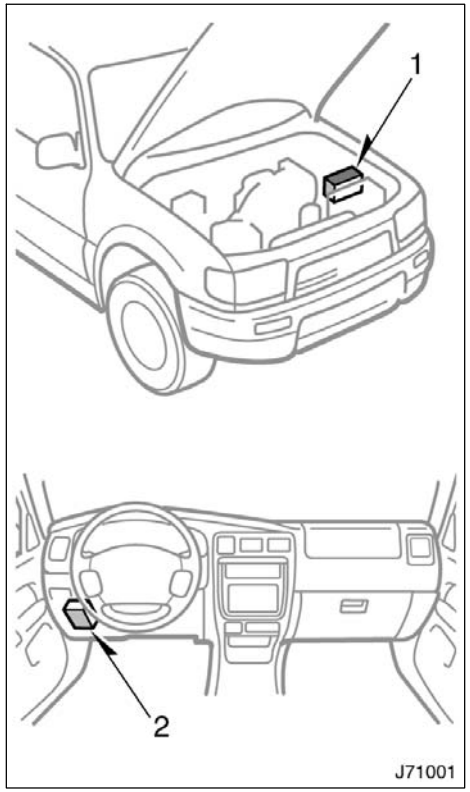


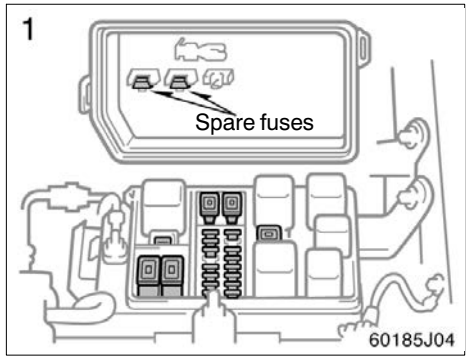


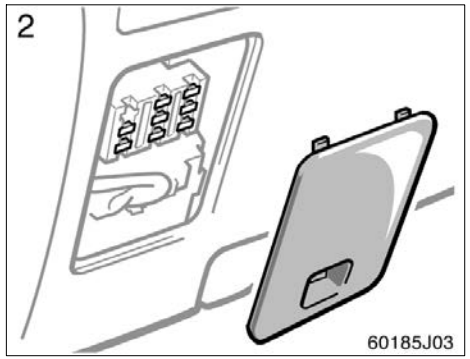


## Do-it-yourself service precautions

If you perform maintenance by yourself, be sure to follow the correct procedure given in this part.

You should be aware that improper or incomplete servicing may result in operating problems.

Performing do-it-yourself maintenance during the warranty period may affect your warranty coverage. Read the separate Toyota Warranty statement for details and suggestions.

This part gives instructions only for those items that are relatively easy for an owner to perform. As explained in Part 6, there are still a number of items that must be done by a qualified technician with special tools.

For information on tools and parts for do-it-yourself maintenance, see ”Parts and tools”.

Utmost care should be taken when working on your vehicle to prevent accidental injury. Here are a few precautions that you should be especially careful to observe:

**⚠ CAUTION**

- When the engine is running, keep hands, clothing, and tools away from the moving fan and engine drive belts. (Removing rings, watches, and ties is advisable.)
- Right after driving, the engine compartment—the engine, radiator, exhaust manifold, power steering fluid reservoir and spark plug boots, etc.—will be hot. So be careful not to touch them. Oil, fluids and spark plugs may also be hot.
- If the engine is hot, do not remove the radiator cap or loosen the drain plugs to prevent burning yourself.
- Do not smoke, cause sparks or allow open flames around fuel or the battery. Their fumes are flammable.
- Be extremely cautious when working on the battery. It contains poisonous and corrosive sulfuric acid.
- Do not get under your vehicle with just the body jack supporting it. Always use automotive jack stands or other solid supports.
- Use eye protection whenever you work on or under your vehicle where you may be exposed to flying or falling material, fluid spray, etc.
- Used engine oil contains potentially harmful contaminants which may cause skin disorders such as inflammation or skin cancer, so care should be taken to avoid prolonged and repeated contact with it. To remove used engine oil from your skin, wash thoroughly with soap and water.
- Do not leave used oil within the reach of children.
- Dispose of used oil and filter only in a safe and acceptable manner. Do not dispose of used oil and filter in household trash, in sewers or onto the ground. Call your dealer or a service station for information concerning recycling or disposal.

**NOTICE**

- ◆Remember that battery and ignition cables carry high currents or voltages. Be careful of accidentally causing a short circuit.
- ◆Add only demineralized or distilled water to fill the radiator. And if you spill some of the coolant, be sure to wash it off with water to prevent it from damaging the parts or paint.
- ◆Do not allow dirt or anything else to fall through the spark plug holes.
- ◆Do not pry the outer electrode of a spark plug against the center electrode.
- ◆Use only spark plugs of the specified type. Using other types will cause engine damage, loss of performance or radio noise.
- ◆Do not overfill automatic transmission fluid, or the transmission could be damaged.

◆Do not drive with the air cleaner filter removed, or excessive engine wear could result. Also backfiring could cause a fire in the engine compartment.

◆Be careful not to scratch the glass surface with the wiper frame.

◆When closing the engine hood, check to see that you have not forgotten any tools, rags, etc.

## Parts and tools

Here is a list of parts and tools you will need on performing do-it-yourself maintenance. Remember all Toyota parts are designed in metric sizes, so your tools must be metric.

### Checking the engine oil level

Parts (if level is low):
- Engine oil API grade SH, "Energy-Conserving II" or SJ, "Energy-Conserving" multigrade or ILSAC multigrade having viscosity proper for your climate

Tools:
- Rag or paper towel
- Funnel (only for adding oil)

### Checking the engine coolant level

Parts (if level is low):
- Ethylene-glycol antifreeze
- Demineralized or distilled water

Tools:
- Funnel (only for adding coolant)

### Checking brake fluid

Parts (if level is low):
- SAE J1703 or FMVSS No. 116 DOT 3 brake fluid

Tools:
- Rag or paper towel
- Funnel (only for adding fluid)

### Checking power steering fluid

Parts (if level is low):
- Automatic transmission fluid DEXRON®II or III

Tools:
- Rag or paper towel
- Funnel (only for adding fluid)

### Checking battery condition

Tools:
- Warm water
- Baking soda
- Grease
- Conventional wrench (for terminal clamp bolts)

### Checking and replacing fuses

Parts (if replacement is necessary):
- Fuse with same amperage rating as original

Tools:
- Conventional wrench (for instrument lower panel nut)

### Adding washer fluid

Parts:
- Water
- Washer fluid containing antifreeze (for winter use)

Tools:
- Funnel

Replacing light bulbs

Parts:

- Bulb with same number and wattage rating as original (See charts in "Replacing light bulbs" in Chapter 7-3.)

Tools:

- Screwdriver

# Part 7 DO-IT-YOURSELF MAINTENANCE—

## Chapter 7-2 Engine and Chassis

- Checking the engine oil level
- Checking the engine coolant level
- Checking brake fluid
- Checking power steering fluid
- Checking tire pressure
- Checking and replacing tires
- Rotating tires
- Installing snow tires and chains
- Replacing wheels
- Aluminum wheel precautions

### Checking the engine oil level

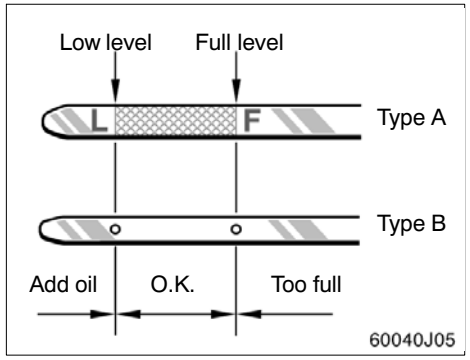


With the engine at operating temperature and turned off, check the oil level on the dipstick.

1. To get a true reading, the vehicle should be on a level spot. After turning off the engine, wait a few minutes for the oil to drain back into the bottom of the engine.
2. Pull out the dipstick, and wipe it clean with a rag.
3. Reinsert the dipstick—push it in as far as it will go, or the reading will not be correct.
4. Pull the dipstick out and look at the oil level on the end.

If the oil level is below or only slightly above the low level, add engine oil of the same type as already in the engine.

Remove the oil filler cap and add engine oil in small quantities at a time, checking the dipstick.

The approximate quantity of oil needed to fill between the low level and the full level on the dipstick is indicated below for reference.

When the level reaches within the correct range, install the filler cap hand-tight.

Oil quantity, L (qt., Imp. qt.):

3RZ-FE engine
1.5 (1.6, 1.3)

5VZ-FE engine
1.2 (1.3, 1.1)

| NOTICE |
|---|
| ◆Avoid overfilling, or the engine could be damaged.<br>◆Check the oil level on the dipstick once again after adding the oil. |

ENGINE OIL SELECTION

Use API grade SH, "Energy-Conserving II" or SJ, "Energy-conserving" multigrade engine oil or ILSAC multigrade engine oil.

Recommended viscosity (SAE):

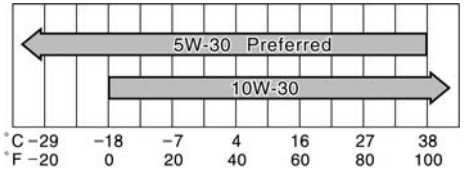


Temperature range anticipated before next oil change

OIL01U

SAE 5W-30 is the best choice for your vehicle, for good fuel economy and good starting in cold weather.

If you use SAE 10W-30 engine oil in extremely low temperatures, the engine may become difficult to start, so SAE 5W-30 engine oil is recommended.

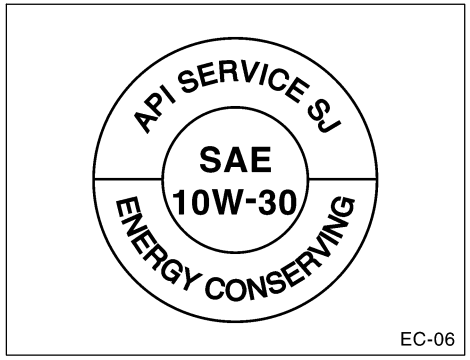


API service symbol

ILSAC certification mark

Oil identification marks

Either or both API registered marks are added to some oil containers to help you select the oil you should use.

The API Service Symbol is located anywhere on the outside of the container.

The top portion of the label shows the oil quality by API (American Petroleum Institute) designations such as SJ. The center portion of the label shows the SAE viscosity grade such as SAE 5W-30. "Energy-Conserving" shown in the lower portion, indicates that the oil has fuel-saving capabilities.

The ILSAC (International Lubricant Standardization and Approval Committee) Certification Mark is displayed on the front of the container.

## Checking the engine coolant level

Look at the see-through coolant reservoir when the engine is cold. The coolant level is satisfactory if it is between the "F (Full)" and "L (Low)" lines on the reservoir. If the level is low, add ethylene-glycol type coolant.

The coolant level in the reservoir will vary with engine temperature. However, if the level is on or below the "L" line, add coolant. Bring the level up to the "F" line.

Use only ethylene-glycol type coolant. See information in the next column.

If the coolant level drops within a short time after replenishing, there may be a leak in the system. Visually check the radiator, hoses, radiator cap and drain cock and water pump.

If you can find no leak, have your Toyota dealer test the cap pressure and check for leaks in the cooling system.

| ⚠ CAUTION |
| --- |
| To prevent burning yourself, do not remove the radiator cap when the engine is hot. |

### Coolant type selection

Your coolant must contain ethylene-glycol antifreeze. In addition to preventing freezing and subsequent damage to the engine, this will also prevent corrosion. Further supplemental inhibitors or additives are neither needed nor recommended.

Read the antifreeze container for information on freeze protection. Follow the manufacturer's directions for how much to mix with water. The total capacity of the cooling system is given in Part 8. We recommend 50% solution be used for your Toyota, or a sufficient quantity to provide protection to about -35°C (-31°F).

| NOTICE |
| --- |
| Do not use alcohol type antifreeze or plain water alone. |

## Checking brake fluid

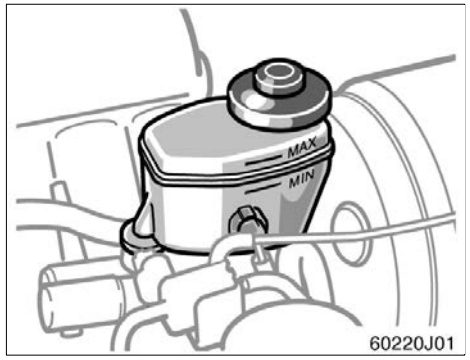


To check the fluid level, simply look at the see-through reservoir. The level should be between the "MAX" and "MIN" lines on the reservoir.

It is normal for the brake fluid level to go down slightly as the brake pads wear. So be sure to keep the reservoir filled.

If the reservoir needs frequent refilling, it may indicate a serious mechanical problem.

If the level is low, add SAE J1703 or FMVSS No. 116 DOT 3 brake fluid to the brake reservoir.

Remove and replace the reservoir cover by hand.

Use only newly opened brake fluid. Once opened, brake fluid absorbs moisture from the air, and excess moisture can cause a dangerous loss of braking.

**⚠ CAUTION**

Take care when filling the reservoir because brake fluid can harm your eyes and damage painted surfaces. If fluid gets in your eyes, flush your eyes with clean water.

**NOTICE**

If you spill the fluid, be sure to wash it off with water to prevent it from damaging the parts or paint.

## Checking power steering fluid

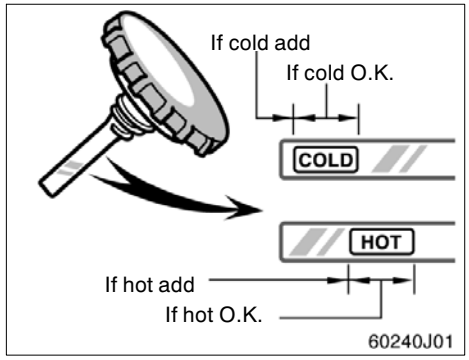


Check the fluid level on the dipstick. If necessary, add automatic transmission fluid DEXRON®II or III.

If the vehicle has been driven around 80 km/h (50 mph) for 20 minutes (a little more in frigid temperatures), the fluid is hot (60°C—80°C or 140°F—175°F). You may also check the level when the fluid is cold (about room temperature, 10°C—30°C or 50°F—85°F) if the engine has not been run for about five hours.

a. Clean all dirt from outside of the reservoir tank.

b. Remove the filler cap by turning it counterclockwise and wipe the dipstick clean.

c. Reinstall the filler cap.

d. Remove the filler cap again and look at the fluid level. If the fluid is cold, the level should be in the ”COLD” range on the dipstick. Similarly, if it is hot, the fluid level should be in the ”HOT” range. If the level is at the low side of either range, add automatic transmission fluid DEXRON®II or III to bring the level within the range.

e. After replacing the filler cap, visually check the steering box case, vane pump and hose connections for leaks or damage.

**⚠ CAUTION**

The reservoir tank may be hot so be careful not to burn yourself.

**NOTICE**

Avoid overfilling, or the power steering could be damaged.

## Checking tire pressure

Keep your tire pressures at the proper level.

The recommended cold tire pressures, tire size and the cargo weight rating are given in Part 8.

You should check the tire pressures every two weeks, or at least once a month. And do not forget the spare!

Incorrect tire pressure can reduce tire life and make your vehicle less safe to drive.

Low tire pressure results in excessive wear, poor handling, reduced fuel economy, and the possibility of blowouts from overheated tires. Also, low tire pressure can cause poor sealing of the tire bead. If the tire pressure is excessively low, there is the possibility of wheel deformation and/or tire separation.

High tire pressure produces a harsh ride, handling problems, excessive wear at the center of the tire tread, and a greater possibility of tire damage from road hazards.

If a tire frequently needs refilling, have it checked by your Toyota dealer.

The following instructions for checking tire pressure should be observed:

- The pressure should be checked only when the tires are cold. If your vehicle has been packed for at least 3 hours and has not been driven for more than 1.5 km or 1 mile since, you will get an accurate cold tire pressure reading.
- Always use a tire pressure gauge. The appearance of a tire can be misleading. Besides, tire pressures that are even just a few pounds off can degrade handling and ride.
- Do not bleed or reduce tire pressure after driving. It is normal for the tire pressure to be higher after driving.
- Never exceed the vehicle capacity weight. The passenger and luggage weight should be located so that the vehicle is balanced.
- Be sure to reinstall the tire inflation valve caps. Without the valve caps, dirt or moisture could get into the valve core and cause air leakage. If the caps have been lost, have new ones put on as soon as possible.

## Checking and replacing tires

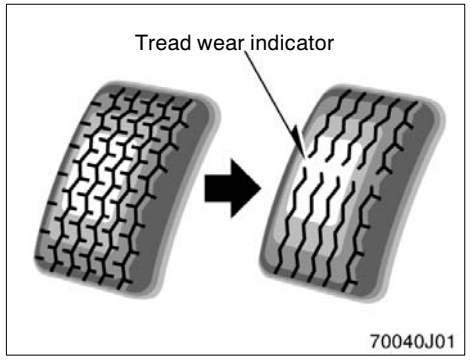


CHECKING YOUR TIRES

Check the tire tread for the tread wear indicators. If the indicators show, replace the tires.

The tires on your Toyota have built-in tread wear indicators to help you know when the tires need replacement. When the tread depth wears to 1.6 mm (0.06 in.) or less, the indicators will appear. If you can see the indicators in two or more adjacent grooves, the tire should be replaced. The lower the tread, the higher the risk of skidding.

The effectiveness of snow tires is lost if the tread wears down below 4 mm (0.16 in.).

Check the tires regularly for damage such as cuts, splits and cracks. If any damage is found, consult with a technician and have the tire repaired or replaced.

Even if the damage does not appear serious, a qualified technician should examine the damage. Objects which have penetrated the tire may have caused internal damage.

Any tires which are over six years old must be checked by a qualified technician even if damage is not obvious.

Tires deteriorate with age even if they have never or seldom been used.

This also applies to the spare tire and tires stored for future use.

REPLACING YOUR TIRES

When replacing a tire, use only the same size and construction as originally installed and with the same or greater load capacity.

Using any other size or type of tire may seriously affect handling, ride, speedometer/odometer calibration, ground clearance, and clearance between the body and tires or snow chains.

⚠ CAUTION

- Do not mix radial, bias belted, or bias-ply tires on your vehicle. It can cause dangerous handling characteristics, resulting in loss of control.
- Do not use tires or wheels other than the manufacture's recommended size.

Toyota recommends all four tires, or at least both of the front or rear tires be replaced at a time as a set.

See "If you have a flat tire" in Part 4 for tire change procedure.

When a tire is replaced, the wheel should always be balanced.

An unbalanced wheel may affect vehicle handling and tire life. Wheels can get out of balance with regular use and should therefore be balanced occasionally.

When replacing a tubeless tire, the air valve should also be replaced with a new one.

## Rotating tires

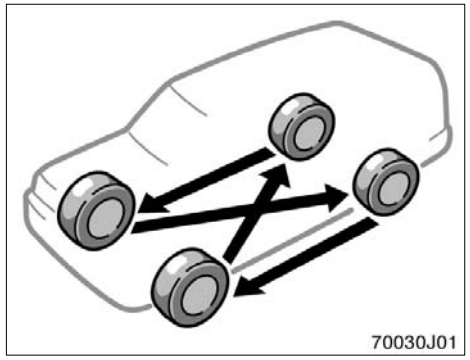


To equalize tire wear and help extend tire life, Toyota recommends that you rotate your tires approximately every 12000 km (7500 miles). However, the most appropriate timing for tire rotation may vary according to your driving habits and road surface conditions.

See "If you have a flat tire" in Part 4 for tire change procedure.

When rotating tires, check for uneven wear and damage. Abnormal wear is usually caused by incorrect tire pressure, improper wheel alignment, out-of-balance wheels, or severe braking.

## Installing snow tires and chains

WHEN TO USE SNOW TIRES OR CHAINS

Snow tires or chains are recommended when driving on snow or ice.

On wet or dry roads, conventional tires provide better traction than snow tires.

SNOW TIRE SELECTION

If you need snow tires, select the same size, construction and load capacity as the original tires on your Toyota.

Do not use tires other than those mentioned above. Do not install studded tires without first checking local regulations for possible restrictions.

SNOW TIRE INSTALLATION

Snow tires should be installed on all wheels.

Installing snow tires on the front wheels only can lead to an excessive difference in road grip capability between the front and rear tires which could cause loss of vehicle control.

When storing removed tires, you should store them in a cool dry place.

Mark the direction of rotation and be sure to install them in the same direction when replacing.

**⚠ CAUTION**

- Do not drive with the snow tires incorrectly inflated.
- Never drive over 120 km/h (75 mph) with any type of snow tires.

TIRE CHAIN SELECTION

Use the tire chains of correct size.

Regulations regarding the use of tire chains vary according to location or type of road, so always check them before installing chains.

CHAIN INSTALLATION

Install the chains on the rear tires as tightly as possible. Do not use tire chains on the front tires. Retighten chains after driving 0.5—1.0 km (1/4—1/2 mile).

When installing chains on your tires, carefully follow the instructions of the chain manufacturer.

If wheel covers are used, they will be scratched by the chain band, so remove the covers before putting on the chains.

**⚠ CAUTION**

- Do not exceed 50 km/h (30 mph) or the chain manufacturer's recommended speed limit, whichever is lower.
- Drive carefully avoiding bumps, holes, and sharp turns, which may cause the vehicle to bounce.
- Avoid sharp turns or locked-wheel braking, as use of chains may adversely affect vehicle handling.

## Replacing wheels

WHEN TO REPLACE YOUR WHEELS

If you have wheel damage such as bending, cracks or heavy corrosion, the wheel should be replaced.

If you fail to replace damaged wheels, the tire may slip off the wheel or they may cause loss of handling control.

WHEEL SELECTION

When replacing wheels, care should be taken to ensure that the wheels are replaced by ones with the same load capacity, diameter, rim width, and offset.

Correct replacement wheels are available at your Toyota dealer.

A wheel of a different size or type may adversely affect handling, wheel and bearing life, brake cooling, speedometer/odometer calibration, stopping ability, headlight aim, bumper height, vehicle ground clearance, and tire or snow chain clearance to the body and chassis.

Replacement with used wheels is not recommended as they may have been subjected to rough treatment or high mileage and could fail without warning. Also, bent wheels which have been straightened may have structural damage and therefore should not be used. Never use an inner tube in a leaking wheel which is designed for a tubeless tire.

## Aluminum wheel precautions

- After driving your vehicle the first 1600 km (1000 miles), check that the wheel nuts are tight.
- If you have rotated, repaired or changed your tires, check that the wheel nuts are still tight after driving 1600 km (1000 miles).
- When using tire chains, be careful not to damage the aluminum wheels.
- Use only the Toyota wheel nuts and wrench designed for your aluminum wheels.
- When balancing your wheels, use only Toyota balance weights or equivalent and a plastic or rubber hammer.
- As with any wheel, periodically check your aluminum wheels for damage. If damaged, replace immediately.

# Part 7
# DO-IT-YOURSELF MAINTENANCE—

## Chapter 7-3
## Electrical components

- Checking battery condition
- Battery recharging precautions
- Checking and replacing fuses
- Adding washer fluid
- Replacing light bulbs

### Checking battery condition——Precautions

**⚠ CAUTION**

BATTERY PRECAUTIONS

The battery produces flammable and explosive hydrogen gas.

- Do not cause a spark from the battery with tools.
- Do not smoke or light a match near the battery.

The electrolyte contains poisonous and corrosive sulfuric acid.

- Avoid contact with eyes, skin or clothes.
- Never ingest electrolyte.
- Wear protective safety glasses when working near the battery.
- Keep children away from the battery.

EMERGENCY MEASURES

- If electrolyte gets in your eyes, flush your eyes with clean water immediately and get immediate medical attention. If possible, continue to apply water with a sponge or cloth while en route to the medical office.
- If electrolyte gets on your skin, thoroughly wash the contact area. If you feel pain or burning, get medical attention immediately.
- If electrolyte gets on your clothes, there is a possibility of its soaking through to your skin, so immediately take off the exposed clothing and follow the procedure above, if necessary.
- If you happen to swallow electrolyte, drink a large quantity of water or milk. Follow with milk of magnesia, beaten raw egg or vegetable oil. Then go immediately for emergency help.

## —Checking battery exterior

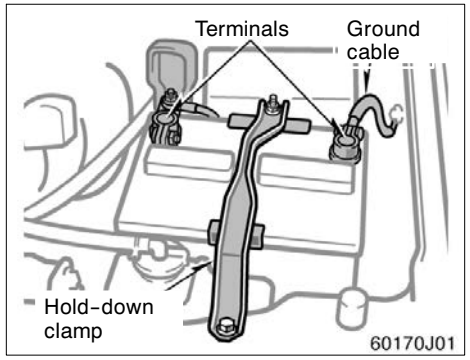


Check the battery for corroded or loose terminal connections, cracks, or loose hold-down clamp.

a. If the battery is corroded, wash it off with a solution of warm water and baking soda. Coat the outside of the terminals with grease to prevent further corrosion.

b. If the terminal connections are loose, tighten their clamp nuts—but do not overtighten.

c. Tighten the hold-down clamp only enough to keep the battery firmly in place. Overtightening may damage the battery case.

**NOTICE**

- Be sure the engine and all accessories are off before performing maintenance.
- When checking the battery, remove the ground cable from the negative terminal ("—" mark) first and reinstall it last.
- Be careful not to cause a short circuit with tools.
- Take care no solution gets into the battery when washing it.

## —Checking battery fluid

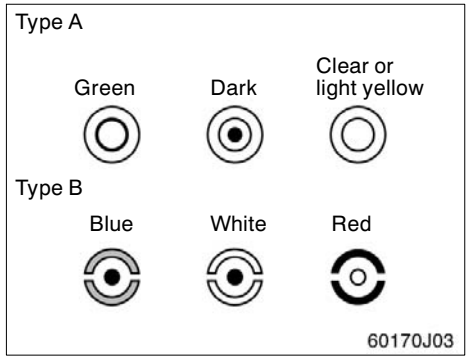


CHECKING BY THE HYDROMETER

Check the battery condition by the hydrometer color.

| Hydrometer color | | Condition |
|---|---|---|
| Type A | Type B | |
| GREEN | BLUE | Good |
| DARK | WHITE | Charging necessary. Have battery checked by your Toyota dealer. |
| CLEAR or LIGHT YELLOW | RED | Have battery checked by your Toyota dealer. |

## Battery recharging precautions

During recharging, the battery is producing hydrogen gas.

Therefore, before recharging:

1. If recharging with the battery installed on the vehicle, be sure to disconnect the ground cable.
2. Be sure the power switch on the recharger is off when connecting the charger cables to the battery and when disconnecting them.

**⚠ CAUTION**

- Always charge the battery in an unconfined area. Do not charge the battery in a garage or closed room where there is not sufficient ventilation.
- Only do a slow charge (5A or less). Charging at a quicker rate is dangerous. The battery may explode, causing personal injuries.

**NOTICE**

Never recharge the battery while the engine is running. Also, be sure all accessories are turned off.

## Checking and replacing fuses

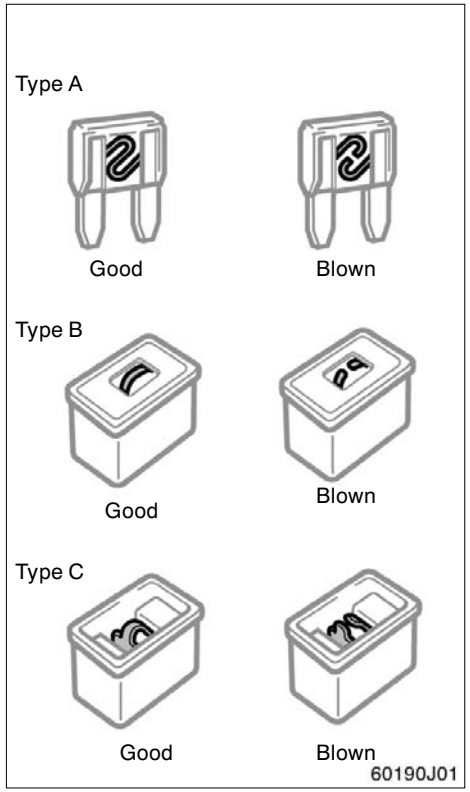

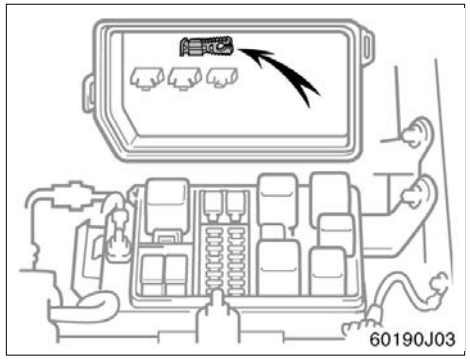


If the headlights or other electrical components do not work, check the fuses. If any of the fuses are blown, they must be replaced.

See "Fuse locations" in Chapter 7-1 for locations of the fuses.

Turn the ignition switch and inoperative component off. Pull a suspected fuse straight out and check it.

Determine which fuse may be causing the problem. The lid of the fuse box shows the name of the circuit for each fuse. See Part 8 of this manual for the functions controlled by each circuit.

Type A fuses can be pulled out by using the pull-out tool. The location of the pull-out tool is shown in the illustration.

If you are not sure whether the fuse has blown, try replacing the suspected fuse with one that you know is good.

If the fuse has blown, push a new fuse into the clip.

Only install a fuse with the amperage rating designated on the fuse box lid.

If you do not have a spare fuse, in an emergency you can pull out the "DOME" or "A/C" fuse, which may be dispensable for normal driving, and use it if its amperage rating is the same.

If you cannot use one of the same amperage, use one that is lower, but as close as possible to the rating. If the amperage is lower than that specified, the fuse might blow out again but this does not indicate anything wrong. Be sure to get the correct fuse as soon as possible and return the substitute to its original clip.

It is a good idea to purchase a set of spare fuses and keep them in your vehicle for emergencies.

If the new fuse immediately blows out, there is a problem with the electrical system. Have your Toyota dealer correct it as soon as possible.

**⚠ CAUTION**

Never use a fuse with a higher amperage rating, or any other object, in place of a fuse. This may cause extensive damage and possibly a fire.

## Adding washer fluid

If any washer does not work, the washer tank may be empty. Add washer fluid.

You may use plain water as washer fluid. However, in cold areas where temperatures range below freezing point, use washer fluid containing antifreeze. This product is available at your Toyota dealer and most auto parts stores. Follow the manufacturer's directions for how much to mix with water.

**NOTICE**

Do not use engine antifreeze or any other substitute because it may damage your vehicle's paint.

## Replacing light bulbs—

The following illustrations show how to gain access to the bulbs. When replacing a bulb, make sure the ignition switch and light switch are off. Use bulbs with the wattage ratings given in the table.

**⚠ CAUTION**

Halogen bulbs have pressurized gas inside and require special handling. They can burst or shatter if scratched or dropped. Hold a bulb only by its plastic or metal case. Do not touch the glass part of a bulb with bare hands.

**NOTICE**

Only use a bulb of the listed type.

| Light bulbs | Bulb No. | W | Type |
|---|---|---|---|
| Headlight | — | 60/55 | A |
| Parking and front side marker lights | — | 5 | C |
| Front turn signal lights | 1156 | 27 | B |
| Rear turn signal lights | — | 21 | C |
| Stop and tail lights | — | 21/5 | C |
| Back-up lights | — | 21 | C |
| License plate light | — | 5 | C |
| High mounted stop light | 921 | 18 | C |
| Interior light | — | 8 | D |
| Personal lights | — | 8 | D |
| Glovebox light | — | 1.4 | C |
| Luggage compartment light | — | 8 | D |

A: HB2 halogen bulbs
B: Single end bulbs
C: Wedge base bulbs
D: Double end bulbs

## —Headlights

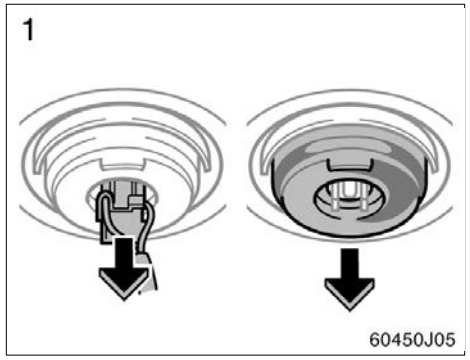


1. Open the hood. Unplug the connector. Remove the rubber cover.

If the connector is tight, wiggle it.

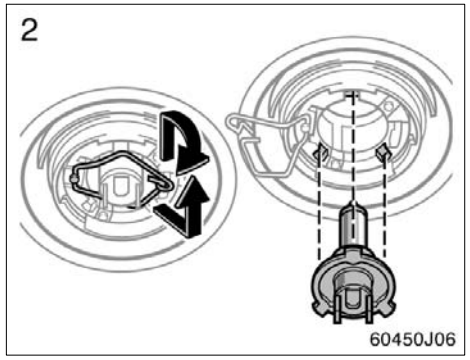


2. Release the bulb retaining spring and remove the bulb. Install a new bulb and the bulb retaining spring.

To install a bulb, align the tabs of the bulb with the cutouts of the mounting hole.

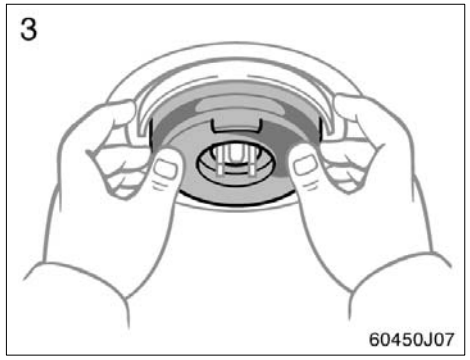


3. Install the rubber cover, and snuggle on the boss. Insert the connector.

Make sure the rubber cover fits snugly on the connector and the headlight body.

Aiming is not necessary after replacing the bulb. When aiming adjustment is necessary, contact your Toyota dealer.

—Parking and front side marker lights

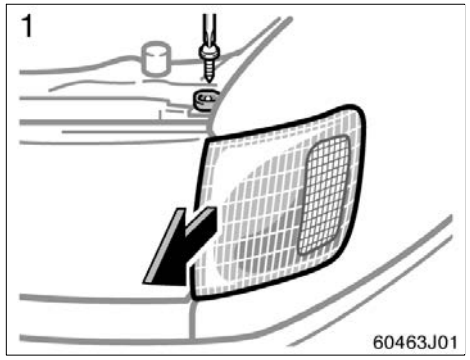


Use a Phillips-head screwdriver.

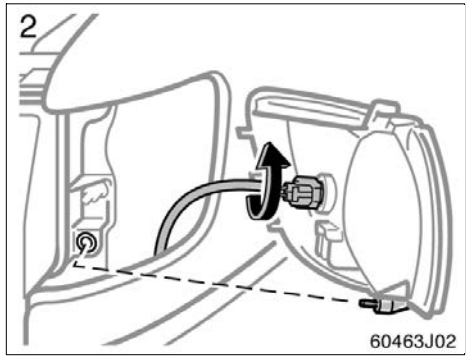


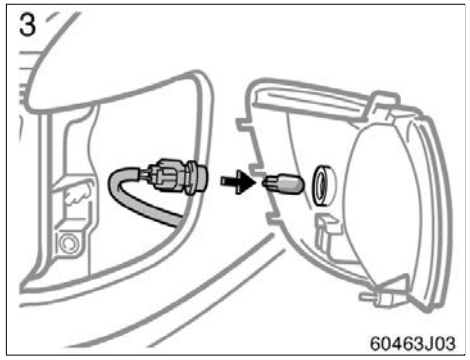


—Front turn signal lights

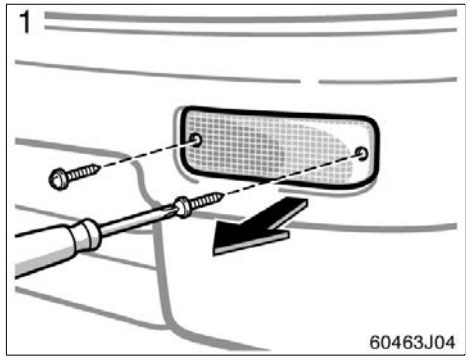


Use a Phillips-head screwdriver.

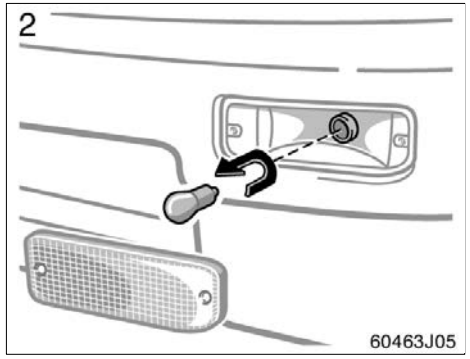

—Rear turn signal, stop and tail, and back-up lights

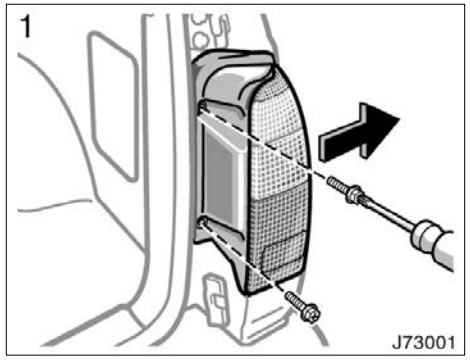


Use a Phillips-head screwdriver.

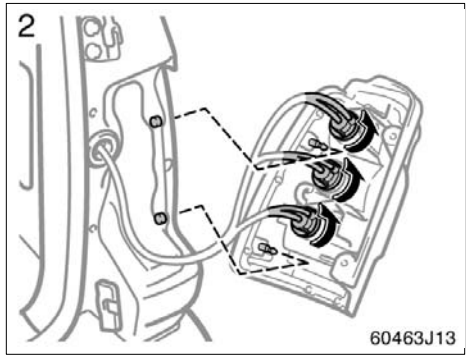


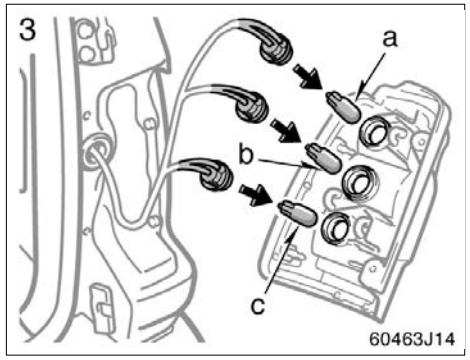


a: Back-up light
b: Rear turn signal lights
c: Stop and tail light

—License plate lights

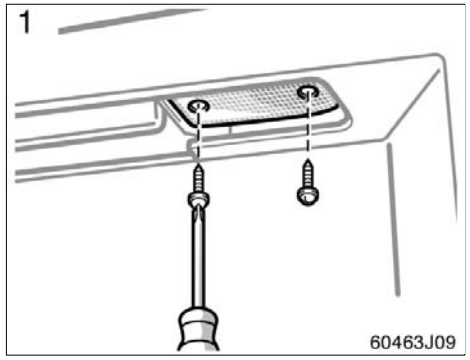


Use a Phillips-head screwdriver

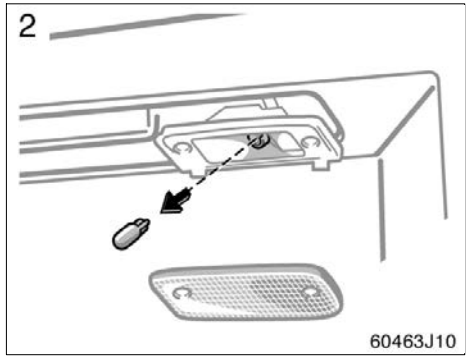

—High mounted stoplight

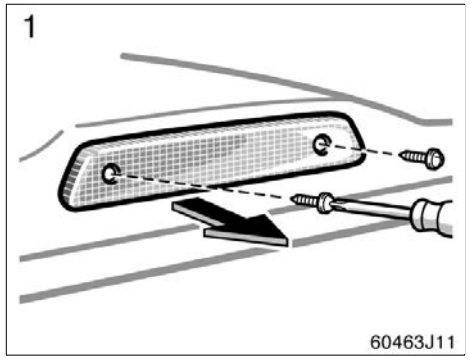


Use a Phillips-head screwdriver

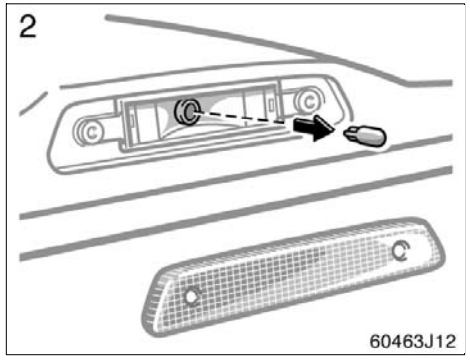

# Part 8
# SPECIFICATIONS

- Dimensions and weight
- Engine
- Fuel
- Service specifications
- Tires
- Fuses

## Dimensions and weight

mm (in.)

| | P225/75R 15 tire | P265/70R 16 tire | |
|---|---|---|---|
| | | Without wheel opening extension | With wheel opening extension |
| Overall length | 4540 (178.7) | 4540 (178.7) | 4540 (178.7) |
| Overall width | 1690 ( 66.5) | 1730 ( 68.1) | 1800 ( 70.9) |
| Overall height | 1715 ( 67.5)* | 1760 ( 69.3)* | 1760 ( 69.3)* |
| Wheelbase | 2675 (105.3) | 2675 (105.3) | 2675 (105.3) |
| Front tread | 1505 ( 59.3) | 1505 ( 59.3) | 1505 ( 59.3) |
| Rear tread | 1495 ( 58.9) | 1510 ( 59.4) | 1510 ( 59.4) |

Cargo weight rating kg (lb.):
200 (300)

*: Unladen vehicle

## Engine

Model:
3RZ-FE and 5VZ-FE

Type:
3RZ-FE engine
4 cylinder in line, 4 cycle, gasoline

5VZ-FE engine
6 cylinder V type 4 cycle, gasoline

Bore and stroke, mm (in.):
3RZ-FE engine
95.0 x 95.0 (3.74 x 3.74)
5VZ-FE engine
93.5 x 82.0 (3.68 x 3.23)

Displacement, $cm^3$ (cu. in.):
3RZ-FE engine
2694 (164.3)
5VZ-FE engine
3378 (206.1)

## Fuel

Fuel type:

Unleaded gasoline, Octane Rating 87 (Research Octane Number 91) or higher

Fuel tank capacity, L (gal., Imp. gal.):
70 (18.5, 15.4)

## Service specifications

ENGINE

Valve clearance (engine cold), mm (in.):

| | | |
|---|---|---|
| 3RZ-FE engine | | |
| Intake | 0.15—0.25 | (0.006—0.010) |
| Exhaust | 0.25—0.35 | (0.010—0.014) |
| 5VZ-FE engine | | |
| Intake | 0.13—0.23 | (0.006—0.009) |
| Exhaust | 0.27—0.37 | (0.011—0.014) |

Spark plug type:

| | |
|---|---|
| 3RZ-FE engine | |
| DENSO | K16R-U |
| NGK | BKR5EYA |
| 5VZ-FE engine | |
| DENSO | K16TR11 |
| NGK | BKR5EKB-11 |

Spark plug gap, mm (in.):

| | |
|---|---|
| 3RZ-FE engine | 0.8 (0.031) |
| 5VZ-FE engine | 1.1 (0.043) |

Drive belt tension measured with Borroughs drive belt tension gauge No. BT-33-73F (used belt), lbf:

3RZ-FE engine
Generator belt
115□20
Air conditioning compressor belt
100□20
Power steering pump belt
$100^{+25}_{-15}$

5VZ-FE engine
Generator belt
100□20
Air conditioning compressor belt
100□20
Power steering pump belt
$100^{+20}_{-15}$

ENGINE LUBRICATION

Oil capacity (drain and refill), L (qt., Imp. qt.):

| | |
|---|---|
| 3RZ-FE engine | |
| With filter | 5.4 (5.7, 4.8) |
| Without filter | 4.7 (5.0, 4.1) |
| 5VZ-FE engine | |
| With filter | 5.2 (5.5, 4.6) |
| Without filter | 4.9 (5.2, 4.3) |

Oil grade:

API grade SH, "Energy-Conserving II" or SJ, "Energy-Conserving" multigrade engine oil or ILSAC multigrade engine oil is recommended.

Recommended oil viscosity (SAE):

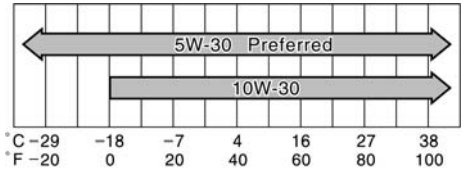


Temperature range anticipated before next oil change

OIL05U

COOLING SYSTEM

Total capacity, L (qt., Imp. qt.):

3RZ-FE engine
With rear heater
11.0 (11.6, 9.7)
Without rear heater
10.0 (10.6, 8.8)

5VZ-FE engine
With rear heater
9.0 (9.5, 7.9)
Without rear heater
8.0 (8.5, 7.0)

Coolant type:

With ethylene-glycol antifreeze
(Do not use alcohol type.)

BATTERY

Open voltage* at 20°C (68°F):

| | |
|---|---|
| 12.6—12.8 V | Fully charged |
| 12.2—12.4 V | Half charged |
| 11.8—12.0 V | Discharged |

*: Voltage that is checked 20 minutes after the key is removed with all the lights turned off

Charging rates:

5 A max.

CLUTCH

Pedal freeplay, mm (in.):
5—15 (0.2—0.6)

Fluid type:
SAE J1703 or FMVSS No. 116 DOT 3

MANUAL TRANSMISSION

Oil capacity, L (qt., Imp. qt.):
3RZ-FE engine
Two-wheel drive models
2.6 (2.7, 2.3)
Four-wheel drive models
2.5 (2.6, 2.2)

5VZ-FE engine
2.2 (2.3, 1.9)

Oil type:
Gear oil API GL-4 or GL-5

Recommended oil viscosity:
SAE 75W-90

AUTOMATIC TRANSMISSION

Fluid capacity (drain and refill), L (qt., Imp. qt.):
Two-wheel drive models
Up to 1.6 (1.7, 1.4)

Four-wheel drive models
Up to 2.0 (2.1, 1.8)

Fluid type:
Automatic transmission fluid D-II or DEXRON®III (DEXRON®II)

TRANSFER

Oil capacity, L (qt., Imp. qt.):
1.0 (1.1, 0.9)

Oil type:
Gear oil API GL-4 or GL-5
Recommended oil viscosity:
SAE 75W-90

DIFFERENTIAL

Oil capacity, L (qt., Imp. qt.):

Two-wheel drive models
2.75 (2.9, 2.4)

Four-wheel drive models
Front
A.D.D.
1.15 (1.2, 1.0)
Except A.D.D.
1.1 (1.2, 1.0)
Rear
With rear differential lock system
2.75 (2.9, 2.4)
Without rear differential lock system
2.45 (2.6, 2.2)

Oil type:
Hypoid gear oil API GL-5

Recommended oil viscosity:

Front
A.D.D.
SAE 75W-90

Except A.D.D.
Above -18°C (0°F)
SAE 90
Below -18°C (0°F)
SAE 80W or 80W-90

Rear
Above -18°C (0°F)
SAE 90
Below -18°C (0°F)
SAE 80W or 80W-90

CHASSIS LUBRICATION

Propeller shafts:
Spiders
Lithium base chassis grease,

NLGI No.2

Slide yoke and double cardan joint
Molybdenum-disulfide lithium base chassis grease, NLGI No.2

BRAKES

Minimum pedal clearance when depressed with the pressure of 490 N (50 kgf, 110 lbf) with the engine running, mm (in.):
75 (2.9)

Pedal freeplay, mm (in.):
3—6 (0.12—0.24)

Pad wear limit, mm (in.):
1.0 (0.04)

Lining wear limit, mm (in.):
1.0 (0.04)

Parking brake adjustment when pulled with the force of 196 N (20 kgf, 44 lbf):
7—9 clicks

Fluid type:
SAE J1703 or FMVSS No. 116 DOT 3

STEERING

Wheel freeplay:
Less than 30 mm (1.2 in.)

Power steering fluid type:
Automatic transmission fluid
DEXRON®II or III

## Tires

| Tire size | Tire pressure kPa (kgf/cm$^2$ or bar, psi) | | Wheel size |
|---|---|---|---|
| | Front | Rear | |
| P265/70R16 | 220 (2.2, 32) | 220 (2.2, 32) | 7J□16*1<br>7JJ□16*2 |
| P225/75R15 | 200 (2.0, 29) | 200 (2.0, 29) | 7J□15*1<br>7JJ□15*2 |

Wheel nut torque, N·m (kgf·m, ft·lbf):
110 (11.5, 83)

*1: Vehicles with steel wheels
*2: Vehicles with aluminum wheel

## Fuses

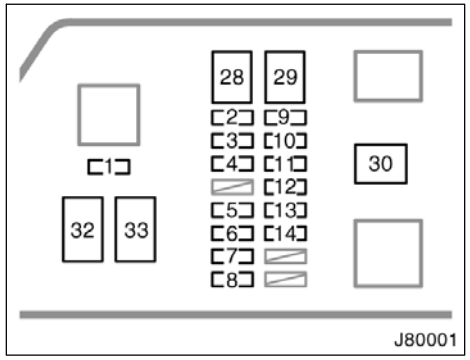


Engine compartment (U.S.A.)

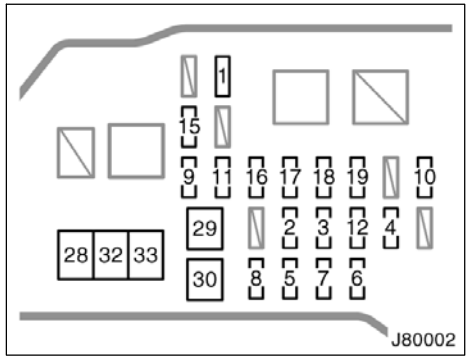


Engine compartment (Canada)

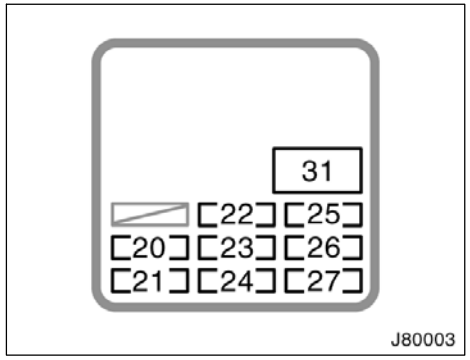


Instrument panel

Fuses (type A)

1. PWR OUTLET 15 A: Power outlet
2. DEFOG 15 A: Back window defogger
3. STOP 10 A: Stop lights, high-mounted stoplight
4. ALT-S 7.5 A: Charging system
5. OBD 7.5 A: On-board diagnosis system
6. EFI 15 A: Multiport fuel injection system/sequential multiport fuel injection system
7. HORN 15 A: Horns, emergency flashers
8. DOME 15 A: Interior lights, personal lights, luggage compartment light, clock, car audio system
9. TAIL 10 A: Tail lights, parking lights, license plate lights
10. STA 7.5 A: Starting system
11. A.C 10 A: Air conditioning control system
12. RR HTR 10 A: Rear air conditioning control system
13. HEAD(RH) 10 A: Right-hand headlight
14. HEAD(LH) 10 A: Left-hand headlight
15. DRL 7.5 A: Daytime running light system
16. HEAD (LO RH) 10 A: Right-hand headlight(low beam)
17. HEAD (LO LH) 10 A: Left-hand headlight(low beam)
18. HEAD (HI RH) 10 A: Right-hand headlight(high beam)
19. HEAD (HI LH) 10 A: Left-hand headlight(high beam)
20. ACC 15 A: Car audio system, power antenna, clock, power rear view mirror control

21. ECU-B 7.5 A: SRS airbag warning light
22. 4WD 20 A: A.D.D. control system, four-wheel drive control system, rear differential lock system
23. TURN 10 A: Turn signals lights, emergency flashers
24. GAUGE 10 A: Gauges and meters, back window defogger, daytime running light system, air conditioning system, electric moon roof
25. ECU-IG 10 A: cruise control system, anti-lock brake system, electronically controlled automatic transmission system, power antenna
26. WIPER 20 A: windshield wipers and washer, back window wiper
27. IGN 7.5 A: SRS airbag system, multiport fuel injection system / sequential multiport fuel injection system, discharge warning light

Fuses (type B)

28. HEATER 50 A: air conditioning system, "A.C" fuse
29. AM1 40 A: Starting system
30. AM2 30 A: Starting system, "IGN" fuse
31. POWER 30 A: Power window, power back window, electric moon roof

Fuses (type C)

32. ABS 60 A: Anti-lock brake system
33. ALT 100 A: Charging system

# Part 9
# REPORTING SAFETY DEFECTS FOR U.S. OWNERS AND UNIFORM TIRE QUALITY GRADING

- Reporting safety defects for U.S. owners
- Uniform tire quality grading

## Reporting safety defects for U.S. owners

If you believe that your vehicle has a defect which could cause a crash or could cause injury or death, you should immediately inform the National Highway Traffic Safety Administration (NHTSA) in addition to notifying Toyota Motor Sales, U.S.A., Inc.
(Toll-free: 1-800-331-4331).

If NHTSA receives similar complaints, it may open an investigation, and if it finds that a safety defect exists in a group of vehicles, it may order a recall and remedy campaign. However, NHTSA cannot become involved in individual problems between you, your dealer, or Toyota Motor Sales, U.S.A., Inc.

To contact NHTSA, you may either call the Auto Safety Hotline toll-free at 1-800-424-9393 (or 366-0123 in Washington.D.C. area) or write to: NHTSA. U.S.Department of Transportation. Washington.D.C. 20590. You can also obtain other information about motor vehicle safety from the Hotline.

## Uniform tire quality grading

This information has been prepared in accordance with regulations issued by the National Highway Traffic Safety Administration of the U.S. Department of Transportation. It provides the purchasers and/or prospective purchasers of Toyota vehicles with information on uniform tire quality grading.

Your Toyota dealer will help answer any questions you may have as you read this information.

DOT quality grades—All passenger vehicle tires must conform to Federal Safety Requirements in addition to these grades. These quality grades are molded on the sidewall.

Treadwear—The treadwear grade is a comparative rating based on the wear rate of the tire when tested under controlled conditions on a specified government test course. For example, a tire graded 150 would wear one and a half (1-1/2) times as well on the government course as a tire graded 100. The relative performance of tires depends upon the actual conditions of their use, however, and may depart significantly from the norm due to variations in driving habits, service practices and differences in road characteristics and climate.

Traction A, B, C—The traction grades, from highest to lowest, are A, B, and C, and they represent the tire's ability to stop on wet pavement as measured under controlled conditions on specified government test surfaces of asphalt and concrete. A tire marked C may have poor traction performance.

Warning: The traction grade assigned to this tire is based on braking (straight ahead) traction tests and does not include cornering (turning) traction.

Temperature A, B, C—The temperature grades are A (the highest), B, and C, representing the tire's resistance to the generation of heat and its ability to dissipate heat when tested under controlled conditions on a specified indoor laboratory test wheel. Sustained high temperature can cause the material of the tire to degenerate and reduce tire life, and excessive temperature can lead to sudden tire failure. The grade C corresponds to a level of performance which all passenger car tires must meet under the Federal Motor Vehicle Safety Standard No. 109. Grades B and A represent higher levels of performance on the laboratory test wheel than the minimum required by law.

Warning: The temperature grades for this tire are established for a tire that is properly inflated and not overloaded. Excessive speed, underinflation, or excessive loading, either separately or in combination, can cause heat buildup and possible tire failure.

# Part 10
# INDEX

## A


Adding washer fluid . . . . . 215
Adjustment
  Front seats . . . . . 20,21,22
  Seat belt . . . . . 26,28,29
Air conditioning system . . . . . 125
Airbags . . . . . 31
Aluminum wheel precautions . . . . . 210
Anti-glare inside rear view mirror . . . . . 56
Anti-lock brake system warning light . . . . . 67
Anti-theft steering column lock . . . . . 73
Appearance care
  Cleaning the interior . . . . . 186
  Protecting your Toyota from corrosion . . . . . 183
  Washing and waxing . . . . . 184
Automatic transmission
  Driving with an automatic transmission . . . . . 74,78
  Shift lock override button . . . . . 181,182
  Shift pattern . . . . . 74,78
  Shifting speed . . . . . 74,78
Automatic transmission fluid temperature warning light . . . . . 67
Auxiliary box . . . . . 136
Auxiliary catch, Engine hood . . . . . 15
Auxiliary holder . . . . . 135


## B


Back door lock . . . . . 13
Back window defogger switch . . . . . 63
Back window wiper and washer switch . . . . 62
Battery
  Checking battery condition . . . . . 211
  Gas caution . . . . . 211
  Handling safety . . . . . 211
  Recharging precautions . . . . . 213
  Winter driving tips . . . . . 157
Before starting the engine . . . . . 153
Brake pad wear limit indicators . . . . . 148
Brake system . . . . . 145
Brake system warning light . . . . . 67
Brakes
  Fluid level . . . . . 205
  Pad wear limit indicators . . . . . 148
  Parking . . . . . 90
Break-in tips . . . . . 140
Brightness control . . . . . 59


## C


Car audio system . . . . . 95
Carbon monoxide caution . . . . . 143
Cassette player . . . . . 95
Checking and replacing fuses . . . . . 213
Checking brake fluid . . . . . 205
Checking the engine oil level . . . . . 203
Child restraint
  Child restraint system . . . . . 38
  Installation . . . . . 40,45
  Precautions . . . . . 37
  Top strap anchors and locations . . . . . 53
  Types of child restraint system . . . . . 39
Cigarette lighter and ashtray . . . . . 134
Cleaning the interior . . . . . 186
Clock . . . . . 133
Clutch start cancel switch . . . . . 93
Cold weather
  Operation . . . . . 157
Compact disc player . . . . . 95
Controls, Instrument panel . . . . . 2,4
Cooling system
  Coolant level . . . . . 205
  Engine overheating . . . . . 169
  Radiator and reservoir . . . . . 205
  Radiator cap . . . . . 169
  Winter driving tips . . . . . 157
Corrosion prevention . . . . . 183
Cruise control . . . . . 90
Cup holder . . . . . 136


## D


Defogger, Back window . . . . . 63
Dimmer switch, Headlight . . . . . 57
Directional signals . . . . . 57
Discharge warning light . . . . . 67
Do-it-yourself maintenance
  Parts and tools . . . . . 200
  Service precautions . . . . . 198
Does your vehicle need repairing? . . . . . 192
Doors
  Back door . . . . . 13
Driving
  Automatic transmission . . . . . 74,78
  Driving tips . . . . . 153,154
  Manual transmission . . . . . 82

Driving tips
Driving tips in various conditions ..... 154
Driving with a manual transmission ..... 82
Driving with an automatic transmission ..... 74,78
Economical driving ..... 162
Good driving practice ..... 74,78,82
Winter driving tips ..... 157
During
Break-in ..... 140

## E

Economical driving
Saving money on both fuel and repairs ..... 162
Electrical system
Battery ..... 211,213
Fuse locations ..... 198
Fuses ..... 213
Emergency flasher switch ..... 58
Emergency, In case of
Blown fuse ..... 213
Emergency flasher switch ..... 58
Flat tire ..... 170
If you cannot shift automatic transmission selector lever ..... 181,182
If you lose your keys ..... 182
If your engine stalls while driving ..... 168
If your vehicle needs to be towed ..... 176
If your vehicle will not start ..... 165,166
Jump starting ..... 166
Overheating ..... 169
Towing ..... 176
Engine
Before starting the engine ..... 153
Checking the coolant level ..... 205
Emission control device ..... 142
Engine compartment ..... 196,197
Exhaust gas caution ..... 143
Hood release ..... 15
Oil consumption ..... 144
Oil level ..... 203
Overheating ..... 169
Starting procedure ..... 153,154
Three-way catalytic converter ..... 142
Engine coolant
Temperature gauge ..... 66
Winter driving tips ..... 157
Engine coolant temperature gauge ..... 66
Engine oil
Winter driving tips ..... 157
Exhaust gas caution ..... 143

## F

Facts about engine oil consumption ..... 144
Flasher, Headlight ..... 57
Flat tire
After changing wheels ..... 176
Changing tires ..... 174
If you have a flat tire ..... 170
Jack point ..... 173
Jacking precautions ..... 170
Jacking up ..... 173
Loosening wheel nuts ..... 173
Lowering vehicle ..... 175
Reinstalling wheel ornament ..... 176
Removing wheel ornament ..... 172
Wheel block ..... 172
Wheel nuts ..... 175
Floor mat ..... 138
Fluid level
Brake ..... 205
Power steering ..... 206
Washer fluid ..... 215
Fold-down rear seats ..... 22
Foreign countries, Operation in ..... 142
Four-wheel drive
Operating the four-wheel drive system ..... 84,85,86,87
Front seats ..... 20,21,22
Fuel
Filler door opener ..... 16
Fuel economy ..... 162
Fuel information ..... 140
Gauge ..... 65
Operation in foreign countries ..... 142
Tank cap ..... 16
Fuse locations ..... 198
Fuses
Fuse box ..... 213

## G

Gauge
Engine coolant temperature ..... 66
Fuel ..... 65
Glovebox ..... 135

Good driving practice . . . . . 82

## H

Hazard switch . . . . . 58
Head restraints . . . . . 24
Headlight switch . . . . . 57
High speed operation
  During break-in . . . . . 140
Hood release, Engine . . . . . 15
How to start the engine . . . . . 153,154

## I

Identification
  Engine . . . . . 149
  Vehicle . . . . . 149
Ignition switch . . . . . 73
Ignition switch light . . . . . 60
Indicator symbols . . . . . 5
Instrument panel
  Brightness control . . . . . 59
  Cigarette lighter and ashtray . . . . . 134
  Clock . . . . . 133
  Fuel gauge . . . . . 65
  Indicator symbols . . . . . 5
  Odometer . . . . . 67
  Tachometer . . . . . 66
  Trip meter . . . . . 67
Instrument panel light control . . . . . 59
Instrument panel overview . . . . . 2,4
Interior light . . . . . 59

## J

Jack
  Location . . . . . 171
Jump starting . . . . . 166

## K

Key . . . . . 7,182
Key reminder buzzer . . . . . 67

## L

Light bulbs
  Back-up lights . . . . . 218
  Front turn signal lights . . . . . 217
  Headlights . . . . . 216
  High mounted stoplight . . . . . 219
  License plate lights . . . . . 218
  Parking lights . . . . . 217
  Rear turn signal lights . . . . . 218
  Side marker lights . . . . . 217
  Stop and tail lights . . . . . 218
Light bulbs, replacing . . . . . 215
Light reminder buzzer . . . . . 67
Lights
  Luggage compartment . . . . . 60
Lock
  Back door . . . . . 13
  Side doors . . . . . 8
  Steering column . . . . . 73
Low fuel level warning light . . . . . 67
Low oil pressure warning light . . . . . 67
Low windshield washer fluid level
  warning light . . . . . 67
Luggage compartment light . . . . . 60
Luggage cover . . . . . 137
Luggage stowage precautions . . . . . 148

## M

Maintenance
  Do-it-yourself maintenance . . . . . 198
  Does your vehicle need repairing? . . . . . 192
  General maintenance . . . . . 190
  Maintenance requirements . . . . . 189
  Parts and tools . . . . . 200
  Where to go for service . . . . . 189
Malfunction indicator lamp . . . . . 67
Manual transmission
  Driving with a manual transmission . . . . . 82
  Shift pattern . . . . . 82
  Shifting speed . . . . . 82
Maximum allowable speed
  Automatic transmission . . . . . 74,78
  Manual transmission . . . . . 82
Mirror
  Anti-glare inside rear view . . . . . 56
Mirrors
  Folding rear view . . . . . 56
  Outside rear view . . . . . 54
  Power rear view . . . . . 55
Moon roof . . . . . 17

## N

New vehicle break-in . . . . . 140

## O

Odometer . . . . . 67
Off-road driving precautions . . . . . 155
Off-road vehicle precautions . . . . . 139
Oil
  Consumption . . . . . 144
  Power steering . . . . . 206
  Viscosity and grade . . . . . 203
Open door warning light . . . . . 67
Operation in foreign countries . . . . . 142
Overdrive switch . . . . . 74,78
Overheating, Engine . . . . . 169
Overheating, Engine coolant . . . . . 66
Overview
  Engine compartment . . . . . 196,197

## P

Parking brake
  Operation . . . . . 90
  Reminder light . . . . . 90
Personal light . . . . . 60
Polishing . . . . . 184
Power back window switch . . . . . 12
Power outlet . . . . . 134
Power rear view mirror control . . . . . 55
Power steering
  Fluid level . . . . . 206
Power window switches . . . . . 10
Protecting your Toyota from corrosion . . . . . 183

## R

Radiator
  Coolant, Engine . . . . . 205
Radio . . . . . 95
Rear differential lock system . . . . . 88
Rear heater system . . . . . 131
Rear seats
  Fold-down . . . . . 22
Rear view mirror, Anti-glare inside . . . . . 56
Rear view mirrors, Folding . . . . . 56
Rear view mirrors, Outside . . . . . 54
Rear view mirrors, Power . . . . . 55
Reporting safety defects
  for U.S. owners . . . . . 229

## S

Seat belt extender . . . . . 30
Seat belt reminder buzzer . . . . . 67
Seat belt reminder light . . . . . 67
Seat belts
  Cleaning . . . . . 186
  Fastening . . . . . 26,28,29
  Seat belt precautions . . . . . 24
Seats . . . . . 19
Service and maintenance . . . . . 190
Service reminder indicators . . . . . 67
Side door locks . . . . . 8
Spare fuse . . . . . 213
Spare tire . . . . . 170
Spark plugs
  Twin ground electrode spark plugs . . . . . 145
Specifications . . . . . 221
SRS airbag warning light . . . . . 67
SRS driver and front passenger airbags . . . . 31
Starting
  Cold weather . . . . . 153,154
  Engine . . . . . 153,154
  Jump starting . . . . . 166
Steering
  Column lock . . . . . 73
  Tilt steering wheel . . . . . 54
Sun visors
  Vanity mirrors . . . . . 56
Suspension and chassis . . . . . 150
Switch
  Back window defogger . . . . . 63
  Back window wiper and washer . . . . . 62
  Emergency flasher . . . . . 58
  Headlight, dimmer and turn signal . . . . . 57
  Ignition . . . . . 73
  Overdrive . . . . . 74,78
  Windshield wiper and washer . . . . . 61

## T

Tachometer . . . . . 66
Theft prevention labels . . . . . 150
Three-way catalytic converter . . . . . 142
Tie-down hooks . . . . . 137
Tilt steering wheel . . . . . 54

Tires
Changing . . . . . 170
Flat tire . . . . . 170
Rotation . . . . . 208
Spare . . . . . 170
Tire information . . . . . 207,209,210
Tools . . . . . 171
Towing
Emergency towing . . . . . 179
Emergency towing hook
precautions . . . . . 180
If your vehicle needs to be towed . . . . . 176
Tip for towing a stuck vehicle . . . . . 181
Trailer . . . . . 158
Trailer towing . . . . . 158
Trip meter . . . . . 67
Turn signals . . . . . 57
Types of tires . . . . . 151

## U

Unengaged “Park” warning light . . . . . 67
Uniform tire quality grading . . . . . 230

## W

Warning buzzer . . . . . 67
Washer fluid
Adding washer fluid . . . . . 215
Washing and waxing . . . . . 184
Wheels
Aluminum wheel . . . . . 210
Windshield wiper and washer switch . . . . . 61
Winter driving tips . . . . . 157

**You should know as much about the quality and importance of proper maintenance of your new vehicle as the people who built it.**

**The Toyota authorized Repair Manual tells you how to maintain your vehicle and enables you to correctly perform your own maintenance.**

The best way to keep your new vehicle in top running order is to maintain it properly from the moment you drive it off the showroom floor.

The Toyota authorized Repair Manual is packed with literally everything you need to know to perform your own maintenance in virtually every area of your new vehicle.

# Maintenance procedures for the engine, chassis, body, electrical system, and more, are clearly explained and illustrated.

### Periodic maintenance and tune–up

Periodic maintenance and tune–up helps to prevent small problems from growing into larger ones later on. The repair manual outlines exactly what maintenance is required, provides a schedule for its performance, and clearly explains how to do the work yourself step–by–step.

Areas covered include such things as spark plug replacement, valve clearance adjustment and engine oil and filter replacement.

# Where to obtain the Repair Manual

The repair manual for 4Runner, written in English, may be purchased as applicable from any Toyota dealer.

Pub. Name: 1998 4Runner Repair Manual

Pub. No.: RM580U1 (Maintenance, Preparation, Service specifications and Diagnostics)
RM580U2 (Engine, Chassis and Body)

□U–1

## Quick index


- If a service reminder indicator or warning buzzer comes on ..... 69
- If your vehicle will not start ..... 169
- If your engine stalls while driving ..... 172
- If your vehicle overheats ..... 173
- If you have a flat tire ..... 174
- If your vehicle needs to be towed ..... 180
- Tips for driving during break-in period ..... 142
- How to start the engine ..... 155
- General maintenance ..... 194
- Complete index ..... 235


## Gas station information

Fuel type:

UNLEADED gasoline, Octane Rating 87 (Research Octane Number 91) or higher

See page 142 for detailed information.

Fuel tank capacity:

70 L (18.5 gal., 15.4 Imp.gal.)

Engine oil:

API grade SH, ‘‘Energy-Conserving II’’ or SJ, ”Energy-conserving” multigrade engine oil or ILSAC multigrade engine oil is recommended.

See page 208 for detailed information.

Tire information: See page 211 through 214.

Tire pressure: See page 229.


Publication No. OM35717U
Part No. 01999-35717
Printed in Japan 01-9708-00 B
□□□□□(□□U)