2002

DENALI
DENALI XL

GMC

2002 GMC Yukon Denali / Yukon XL Denali
Owner's Manual

Litho in U.S.A.
Part Number S2216 A First Edition

©Copyright General Motors Corporation 6/18/01
All Rights Reserved

GENERAL MOTORS, GM, the GM Emblem, GMC, the GMC Truck Emblem and the name YUKON DENALI / YUKON XL DENALI are registered trademarks of General Motors Corporation.

This manual includes the latest information at the time it was printed. We reserve the right to make changes after that time without further notice. For vehicles first sold in Canada, substitute the name “General Motors of Canada Limited” for GMC whenever it appears in this manual.

Please keep this manual in your vehicle, so it will be there if you ever need it when you’re on the road. If you sell the vehicle, please leave this manual in it so the new owner can use it.

We support voluntary technician certification.

For Canadian Owners Who Prefer a French Language Manual:

Aux propriétaires canadiens: Vous pouvez vous procurer un exemplaire de ce guide en français chez votre concessionaire ou au:

Helm, Incorporated
P.O. Box 07130
Detroit, MI 48207

How to Use this Manual

Many people read their owner's manual from beginning to end when they first receive their new vehicle. If you do this, it will help you learn about the features and controls for your vehicle. In this manual, you'll find that pictures and words work together to explain things quickly.

Safety Warnings and Symbols

You will find a number of safety cautions in this book. We use a box and the word CAUTION to tell you about things that could hurt you if you were to ignore the warning.

⚠ CAUTION:

These mean there is something that could hurt you or other people.

In the caution area, we tell you what the hazard is. Then we tell you what to do to help avoid or reduce the hazard. Please read these cautions. If you don't, you or others could be hurt.

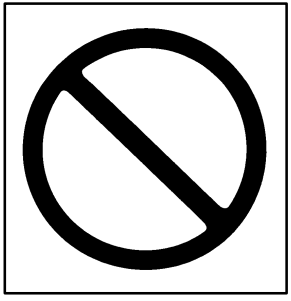

You will also find a circle with a slash through it in this book. This safety symbol means "Don't," "Don't do this" or "Don't let this happen."

Vehicle Damage Warnings

Also, in this book you will find these notices:

NOTICE:
These mean there is something that could damage your vehicle.

In the notice area, we tell you about something that can damage your vehicle. Many times, this damage would not be covered by your warranty, and it could be costly. But the notice will tell you what to do to help avoid the damage.

When you read other manuals, you might see CAUTION and NOTICE warnings in different colors or in different words.

You'll also see warning labels on your vehicle. They use the same words, CAUTION or NOTICE.

Vehicle Symbols

Your vehicle may be equipped with components and labels that use symbols instead of text. Symbols, used on your vehicle, are shown along with the text describing the operation or information relating to a specific component, control, message, gage or indicator.

If you need help figuring out a specific name of a component, gage or indicator reference the following topics in the Index:

- "Engine Compartment Overview"
- "Instrument Panel"
- "Comfort Controls"
- "Audio Systems"

Also see "Warning Lights and Gages" in the Index.

These are some examples of vehicle symbols you may find on your vehicle:

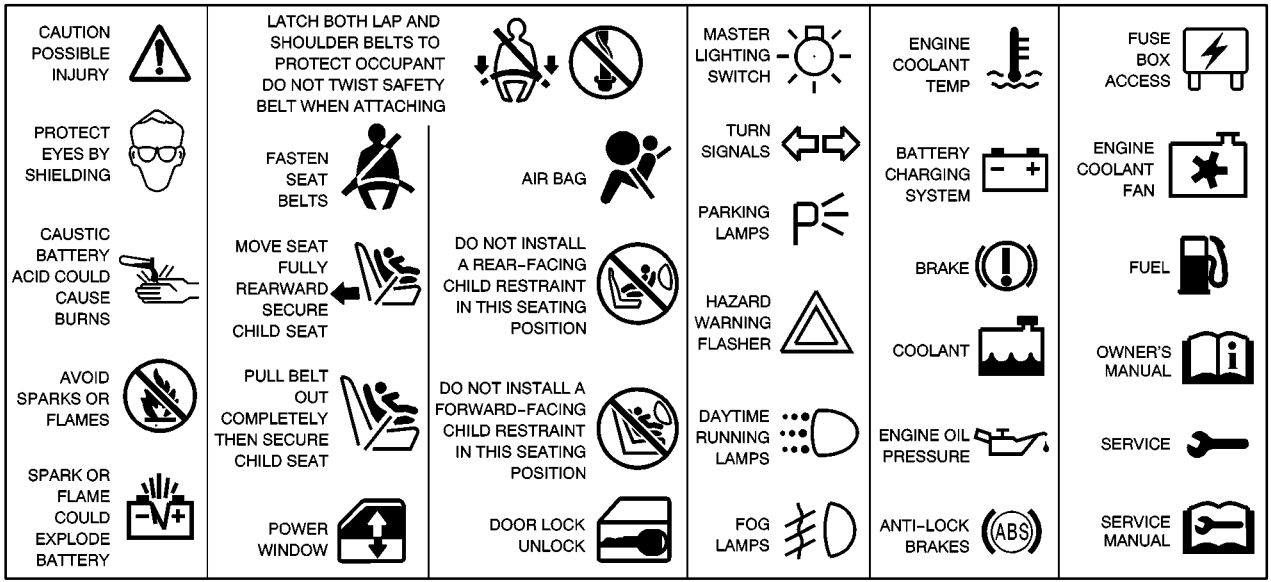

Model Reference

This manual covers these models:

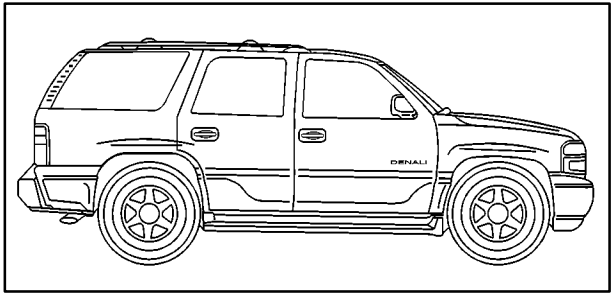

Yukon Denali

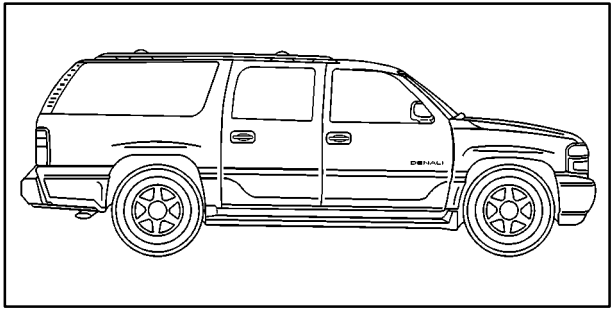

Yukon XL Denali

Section 1 Seats and Restraint Systems

Here you'll find information about the seats in your vehicle and how to use your safety belts properly. You can also learn about some things you should *not* do with air bags and safety belts.

1- 2 Seats and Seat Controls
1- 6 Rear Seats
1- 27 Safety Belts: They're for Everyone
1- 31 Here Are Questions Many People Ask About Safety Belts -- and the Answers
1- 32 How to Wear Safety Belts Properly
1- 33 Driver Position
1- 40 Safety Belt Use During Pregnancy
1- 41 Right Front Passenger Position
1- 41 Air Bag Systems
1- 50 Rear Seat Passengers
1- 53 Rear Safety Belt Comfort Guides for Children and Small Adults
1- 57 Center Passenger Position
1- 58 Children
1- 62 Restraint Systems for Children
1- 78 Older Children
1- 81 Safety Belt Extender
1- 81 Checking Your Restraint Systems
1- 81 Replacing Restraint System Parts After a Crash

Seats and Seat Controls

This section tells you about the seats -- how to adjust them, and fold them up and down. It also tells you about reclining front seatbacks and head restraints.

Power Seats

Horizontal Control: You can adjust your vehicle's front seats with the horizontal control located on the outboard edge of each front seat.

Raise or lower the front of the seat by raising or lowering the forward edge of the control. Raise or lower the rear of the seat by raising or lowering the rear edge of the control.

Move the seat forward or rearward by moving the whole control toward the front or toward the rear of the vehicle.

Moving the whole control up or down raises or lowers the entire seat cushion.

Power Lumbar Control

You can increase or decrease lumbar support in an area of the lower seatback.

To increase support, press and hold the front of the control. To decrease support, press and hold the rear of the control. Let go of the control when the lower seatback reaches the desired level of support.

You can also reshape the side wing area of the lower seatback for more lateral support.

To increase support, press and hold the top of the control. To decrease support, press and hold the bottom of the control. Let go of the control when the lower seatback reaches the desired level of support.

Memory Seat

The memory function can recall preset positions for the driver's seat cushion and the recliner. The memory function does not store the lumbar or back support positions.

The controls for the memory seat are located on the driver's door trim panel.

To set your memory seat do the following:

1. Adjust the driver's seat to the desired position.
2. Press the SET button and then press the 1 or 2 button of the memory control within five seconds.

When your vehicle is in PARK (P), press the same button of the memory control to recall the seat setting.

To do the same thing for a second driver, follow the preceding steps, but press the other number button of the memory control. The memory feature only works when the transmission is in PARK (P).

Heated Front Seats

The control for the driver's side heated seat is located on the driver's side door panel. The control for the passenger's side heated seat is located on the passenger's side door panel.

The ignition must be in RUN for this feature to operate.

To activate the heated seats, press the button once for the HI heat setting. Press the button again for the LO heat setting. To turn off the heated seats, press the button a third time. An indicator light on the button will illuminate for each heat setting anytime the heated seats are operating.

The heated front seats will be canceled after the ignition is turned to OFF. If you still want to use the heated front seat feature after you restart your vehicle, you will need to press the heated seat button again.

Your vehicle also has rear heated seats. See the section on "Rear Heated Seats" later in this section for more information.

Reclining Front Seatbacks

Your vehicles front seatbacks have a recline feature.

Vertical Control: You can use the vertical control to adjust the angle of the seatback. Move the reclining front seatback rearward or forward by moving the vertical control toward the rear or toward the front of the vehicle.

But don’t have a seatback reclined if your vehicle is moving.

⚠ CAUTION:

Sitting in a reclined position when your vehicle is in motion can be dangerous. Even if you buckle up, your safety belts can’t do their job when you’re reclined like this.

The shoulder belt can’t do its job. In a crash, you could go into it, receiving neck or other injuries.

The lap belt can’t do its job either. In a crash the belt could go up over your abdomen. The belt forces would be there, not at your pelvic bones. This could cause serious internal injuries.

For proper protection when the vehicle is in motion, have the seatback upright. Then sit well back in the seat and wear your safety belt properly.

Head Restraints

Slide the head restraint up or down so that the top of the restraint is closest to the top of your head. This position reduces the chance of a neck injury in a crash.

The head restraints tilt forward and rearward also.

To adjust the tilt for either of the front head restraints, pull it toward you until you hear a click. There are four positions available: initial position, first click, second click and third click. Each position will click into place. After the third position (three clicks) is reached, pulling the head restraint farther will release it back to the upright position.

Pull firmly on the top of the head restraint to position it to your liking.

The rear seat head restraints in your vehicle are adjustable. Slide an adjustable head restraint up or down so that the top of the restraint is closest to the top of your head. This position reduces the chance of a neck injury in a crash.

On some models, the head restraints tilt forward and rearward also.

Rear Seats

60/40 Split Bench Seat (Second Row)

If your vehicle has a 60/40 split bench, the seatbacks can be reclined (Yukon Denali only) and the seats can be folded to give you more cargo space.

The Yukon XL Denali 60/40 seats do not recline.

Reclining the Seatbacks (Yukon Denali 60/40 Split Bench Only)

To recline the seatback, do the following:

1. Pull the lever located at the base of the seat cushion forward.

2. Release the lever to lock the seatback where you want it. Pull the lever again without pushing on the seatback and the seatback will go to an upright position.

Folding the Seatbacks (60/40 Split Bench Seat)

⚠ CAUTION:

If the seatback isn't locked, it could move forward in a sudden stop or crash. That could cause injury to the person sitting there. Always press rearward on the seatback to be sure it is locked.

The rear seat may have a 60/40 split seat which may be folded down to create a load floor and give you more cargo space. On the Yukon Denali, the rear seatbacks are equipped with rearward folding head restraints. When the seatback is being folded down, the head restraint will automatically fold rearward. For the Yukon XL Denali you must manually pull the headrest forward before folding the seatback.

To fold the rear seat, do the following:

1. Insert the two safety belt buckles into the pocket in the seatback before folding the rear seat on the driver's side.

   That way, the buckles will be out of the way when the seat is folded and will be available for passengers to use when the seat is returned to the passenger position. Also, make sure that nothing is under or in front of the seat

2. Make sure the seatback is in an upright position (unreclined) before folding it.

3. Pull up on the strap loop located at the rear of the seat cushion and pull the seat cushion up. Then fold it forward.

4. **Yukon Denali:** Pull the seatback forward and fold it down until it is flat.

   Yukon XL Denali : Fold the headrest(s) forward.

On the passenger side of Yukon XL Denali models, the lever at the base of the seat must be pushed down to release the seatback. Pull the seatback forward and fold it down until it is flat.

If the seatback cannot fold flat because it interferes with the cushion, try moving the front seat forward and/or bringing the front seatback more upright.

Once the seatbacks are folded down, on Yukon XL Denali models only, the rear seat footwell area will be exposed and will have to be covered by the load floor panel(s). To create a load floor, do the following:

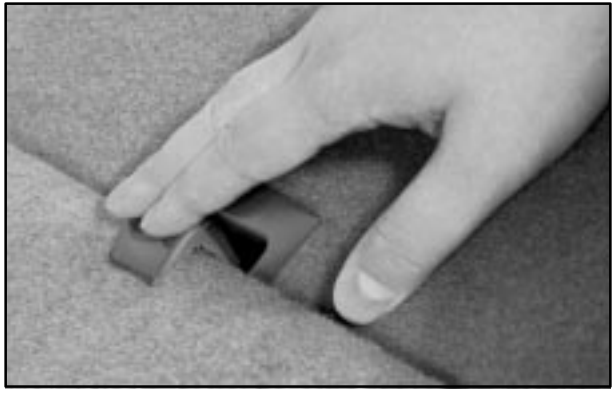

1. Release the panels from the seatbacks by pushing forward on the latches.
2. Then fold the panels back to cover the rear seat footwell area.

Returning the Seats to an Upright Position

To return the seat to the upright position, do the following:

1. Lift the seatback up and push it rearward all the way.
2. Lower the seat cushion until it latches into position.
3. On Yukon XL Denali models, lift the load floor panels and latch them into the seatback.
4. Pull forward on the seatback and up on the seat cushion to make sure the seat is securely in place.
5. Return the head restraints to the upright position.
6. Check to see that the safety belt buckles on the driver's side seatback are accessible to the outboard and center occupants and are not under the seat cushions.

Bucket Seats (Second Row)

If your vehicle has bucket seats, the seatbacks can be reclined and the seats can be folded to give you more cargo room.

Reclining the Seatbacks (Bucket Seats)

To recline the seatback, do the following:

1. Pull the lever located at the base of the seat cushion forward.

2. Release the lever to lock the seatback where you want it. Pull the lever again without pushing on the seatback and the seatback will go to an upright position.

Folding the Seatbacks (Bucket Seats)

⚠ CAUTION:

If the seatback isn't locked, it could move forward in a sudden stop or crash. That could cause injury to the person sitting there. Always press rearward on the seatback to be sure it is locked.

The seatbacks on the bucket seats may be folded forward to give you more cargo space. The headrests on these seats will have to be manually folded to fold the seats. To do this, push the head restraints all the way down and tilt them forward.

To fold the seatbacks on the bucket seats, do the following:

1. Pull up on the strap loop located at the rear of the seat cushion and pull the seat cushion up and fold it forward.

2. Push the seatback release lever rearward and pull the seatback forward and fold it down until it is flat.

If the seatback cannot fold flat because it interferes with the cushion, try moving the front seat forward and/or bringing the front seatback more upright.

Once the seatbacks are folded down, the rear seat footwell area will be exposed and will have to be covered by the load floor panel. To create a load floor, do the following:

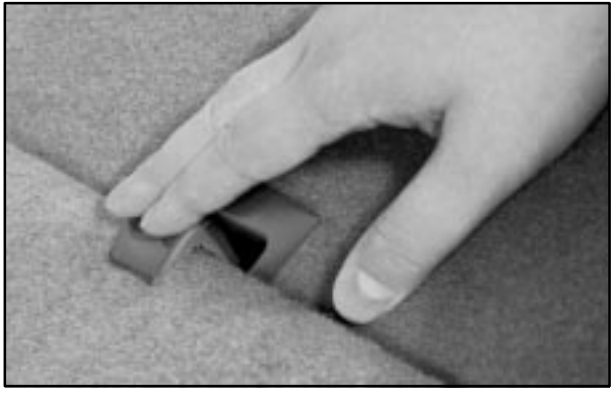

1. Release the panels from the seatbacks by pushing forward on the latches.
2. Then fold the panels back to cover the rear seat footwell area.

Returning the Seatbacks to an Upright Position

To return the seatbacks to the upright position, do the following:

1. Lift the seatback up and push it rearward all the way.
2. Lower the seat cushion until it latches into position.
3. Lift the load floor panels and latch them into the seatback.
4. Pull forward on the seatback and up on the seat cushion to make sure the seat is securely in place.
5. Return the head restraints to the upright position.

50/50 Split Bench Seat (Third Row)

If your vehicle has a 50/50 split bench, the seatback(s) can be folded and the entire seat(s) tilted or removed from the vehicle.

Folding the Seatbacks

⚠ CAUTION:

If the seatback isn't locked, it could move forward in a sudden stop or crash. That could cause injury to the person sitting there. Always press rearward on the seatback to be sure it is locked.

To fold the seatbacks, do the following:

1. Pull up on the release lever, labeled 1, located on the rear of the seatback, and push the seatback forward.

Unfolding the Seatbacks

To return the seatbacks to the passenger position, do the following:

1. Pull up on the release lever labeled 1 and then pull up on the seatback or the assist strap located on the outboard side of the seat until the seatback locks into the upright position.

2. Push forward on the seatback to make sure it is locked into position.

Tilting the 50/50 Split Bench Seat

⚠ CAUTION:

If the seatback isn't locked, it could move forward in a sudden stop or crash. That could cause injury to the person sitting there. Always press rearward on the seatback to be sure it is locked.

⚠ CAUTION:

If the support rod isn't properly engaged, the folded third row seat could come loose in a sudden stop or crash. That could cause injury to people and damage to your vehicle. Always be sure the support rod is properly engaged when the third row seat is folded forward.

1. Fold the seatbacks forward using the instructions listed previously.

2. Unlatch the seat from the floor by pulling up on the lever labeled 2, located on the rear of the seat.

3. Lift the rear of the seat up from the floor and push it forward until it locks into place. You will not be able to unlatch the seat from the floor unless the seatback is folded down.

The seat will now remain locked in the upright position.

Returning the Seat(s) to an Upright Position

To return the seatback to an upright position, do the following:

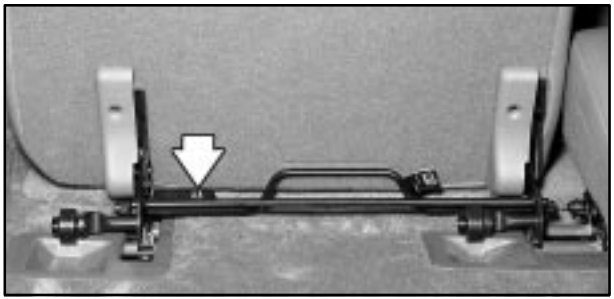

1. Pull the lever labeled 3 toward you.
2. While still holding the lever 3 toward you, grasp the top of the seat and pull it toward you slightly.
3. Let go of lever 3 and pull the seat completely down.
4. Push down on the seat firmly. Try pulling it up to be sure it is locked into place.

5. Pull up on the release lever labeled 1 and then pull up on the seatback or the assist strap located on the outboard side of the seat until the seatback locks into the upright position.

2. Fold the seatback forward onto the seat cushion by using the lever labeled 1. The seat cannot be removed unless the seatback is folded.

Removing the 50/50 Split Bench Seat

To remove the 50/50 split bench seat, do the following:

1. Open the liftgate.

3. To unlatch the rear of the seat from the floor, pull up on the release lever labeled 2, at the rear of the seat, and lift the rear of the seat up from the floor.

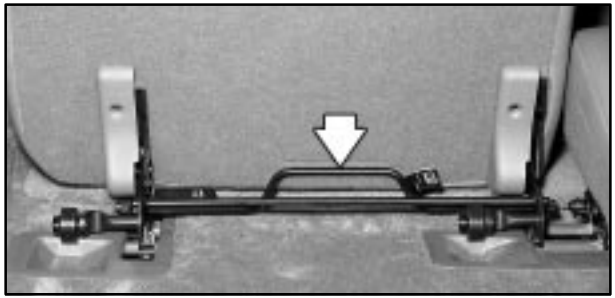

4. Squeeze the release handle while pulling the seat out.
5. While holding the rear of the seat up, roll the seat out of the vehicle.

Replacing the 50/50 Split Bench Seat

⚠ CAUTION:

If the seatback isn't locked, it could move forward in a sudden stop or crash. That could cause injury to the person sitting there. Always press rearward on the seatback to be sure it is locked.

⚠ CAUTION:

A seat that isn't locked into place properly can move around in a collision or sudden stop. People in the vehicle could be injured. Be sure to lock the seat into place properly when installing it.

⚠ CAUTION:

A safety belt that is improperly routed, not properly attached, or twisted won't provide the protection needed in a crash. The person wearing the belt could be seriously injured. After installing the seat, always check to be sure that the safety belts are properly routed and attached, and are not twisted.

To replace the 50/50 split bench, do the following:

1. While holding the rear of the seat up, slide the front wheels into the slots on the floor. The front latches should lock into place. If the latches do not lock, try tilting the rear of the seat upwards.

2. Once the latches are engaged, let the seat drop into place. Release the lever labeled 1 and pull the seatback up using the assist strap on the outboard side of the seat to return it to its upright position.

3. Push and pull on the seat to make sure it is locked into place. The seatback cannot be raised to the upright position unless the seat is secured to the floor.

Full Bench Seat (Third Row)

If your vehicle has a full bench, the seatback can be folded and the seat can be tilted or removed from the vehicle.

Folding the Seatback

⚠ CAUTION:

If the seatback isn't locked, it could move forward in a sudden stop or crash. That could cause injury to the person sitting there. Always press rearward on the seatback to be sure it is locked.

To fold the seatback on the bench seat, do the following:

Pull up on the release lever labeled 1 located on the rear of the seatback and push the seatback forward.

Unfolding the Seat Back

1. To return the seatback to an upright position, pull up on the release lever labeled 1 and then pull up on the seatback until it locks into the upright position.

2. Push and pull on the seatback to check that it is locked into place.

Tilting the Full Bench Seat

⚠ CAUTION:

If the seatback isn't locked, it could move forward in a sudden stop or crash. That could cause injury to the person sitting there. Always press rearward on the seatback to be sure it is locked.

⚠ CAUTION:

If the support rod isn't properly engaged, the folded third row seat could come loose in a sudden stop or crash. That could cause injury to people and damage to your vehicle. Always be sure the support rod is properly engaged when the third row seat is folded forward.

1. Fold the seatbacks forward using the instructions listed previously.

2. Unlatch the seat from the floor by pulling up on the lever labeled 2 located on the rear of the seat.

3. Lift the rear of the seat up from the floor and push it forward. You will not be able to unlatch the seat from the floor unless the seatback is folded down.

4. While holding the seat forward, pull the prop rod out from the retainer clips. Flip the prop rod (arrow) down until it latches into place.

The seat will now remain in the upright position.

Returning the Seat to an Upright Position

To return the seat back to the upright position, do the following:

1. Pull the lever (arrow) on the prop rod bracket until the rod unlatches from the seat bracket.
2. Place the prop rod back into the storage position.
3. Pull the seat toward you and push firmly down until the seat latches in the floor.
4. Try pulling it up to be sure it is locked into place.
5. Pull up on the release lever labeled 1 and then pull up on the seatback until the seatback locks into the upright position.

Removing the Bench Seat

To remove the bench seat, do the following:

1. Open the liftgate.

2. Fold the seatback forward onto the seat cushion by using the lever labeled 1. The seat cannot be removed unless the seatback is folded.

3. To unlatch the rear of the seat from the floor, pull up on the release lever labeled 2 at the rear of the seat and lift the rear of the seat up from the floor.

4. Pull on the release strap located in the lower middle of the seat to unlatch the seat from the floor and pull the seat out. Use one hand to pull the release strap and the other on the handle to pull the seat out.

5. While holding the rear of the seat up, roll the seat out of the vehicle.

Replacing the Full Bench Seat (Third Row)

⚠ CAUTION:

If the seatback isn't locked, it could move forward in a sudden stop or crash. That could cause injury to the person sitting there. Always press rearward on the seatback to be sure it is locked.

⚠ CAUTION:

A seat that isn't locked into place properly can move around in a collision or sudden stop. People in the vehicle could be injured. Be sure to lock the seat into place properly when installing it.

⚠ CAUTION:

A safety belt that is improperly routed, not properly attached, or twisted won't provide the protection needed in a crash. The person wearing the belt could be seriously injured. After installing the seat, always check to be sure that the safety belts are properly routed and attached, and are not twisted.

To replace the bench seat, do the following:

1. While holding the rear of the seat up, slide the front wheels into the slots on the floor. The front latches should lock into place. If the latches do not lock, try tilting the rear of the seat upwards.
2. Once the latches are engaged, let the seat drop into place. Release the lever labeled 1 to return the seatback to its upright position.
3. Push and pull on the seat to make sure it is locked into place. The seatback cannot be raised to the upright position unless the seat is secured to the floor.

Entering or Exiting the Third Row Seats

⚠ CAUTION:

If the seatback isn't locked, it could move forward in a sudden stop or crash. That could cause injury to the person sitting there. Always press rearward on the seatback to be sure it is locked.

Yukon Denali: To enter or exit the third row seat you must fold the second row seat down following the instructions given previously. If you are exiting the third row seat with no assistance do the following:

1. Reach over the second row seat and pull up on the strap loop. Then pull the seat cushion up.
2. Push the seat cushion forward.
3. Next, push the seatback forward until it is flat with the floor.

Be sure to return the seat to the passenger position when finished. Pull forward and push rearward on the seat to make sure it is locked in place.

Yukon XL Denali: The passenger's side of the second row 60/40 or rear bucket seat has an easy entry/exit feature. This makes it easy to get in and out of the third row seat.

To operate the easy entry seat, do the following:

1. Turn the release lever, located near the back of the seat, rearward.
2. Tilt the seatback toward the front of the vehicle and the seat will release.
3. Pull (push if you are exiting the third row with no assistance) the seat forward until it stops.

Be sure to return the seat to the passenger position when finished. Pull forward and push rearward on the seat to make sure it is locked in place.

Heated Rear Seats (Second Row)

The controls are located on the back of the center console.

The ignition must be in RUN for this feature to operate.

To activate the heated seats, press the button once for the HI heat setting. Press the button again for the LO heat setting. To turn off the heated seats, press the button a third time. An indicator light will illuminate for each heat setting any time the heated seats are operating.

The heated seats will be canceled when the ignition is turned to OFF. If you still want to use the heated seat feature after you restart your vehicle, you will need to press the heated seat button again.

Safety Belts: They're for Everyone

This part of the manual tells you how to use safety belts properly. It also tells you some things you should not do with safety belts.

And it explains the air bag system.

⚠ CAUTION:

Don't let anyone ride where he or she can't wear a safety belt properly. If you are in a crash and you're not wearing a safety belt, your injuries can be much worse. You can hit things inside the vehicle or be ejected from it. You can be seriously injured or killed. In the same crash, you might not be if you are buckled up. Always fasten your safety belt, and check that your passengers' belts are fastened properly too.

⚠ CAUTION:

It is extremely dangerous to ride in a cargo area, inside or outside of a vehicle. In a collision, people riding in these areas are more likely to be seriously injured or killed. Do not allow people to ride in any area of your vehicle that is not equipped with seats and safety belts. Be sure everyone in your vehicle is in a seat and using a safety belt properly.

Your vehicle has a light that comes on as a reminder to buckle up. See "Safety Belt Reminder Light" in the Index.

In most states and Canadian provinces, the law says to wear safety belts. Here's why: *They work.*

You never know if you'll be in a crash. If you do have a crash, you don't know if it will be a bad one.

A few crashes are mild, and some crashes can be so serious that even buckled up a person wouldn't survive. But most crashes are in between. In many of them, people who buckle up can survive and sometimes walk away. Without belts they could have been badly hurt or killed.

After more than 30 years of safety belts in vehicles, the facts are clear. In most crashes buckling up does matter ... a lot!

Why Safety Belts Work

When you ride in or on anything, you go as fast as it goes.

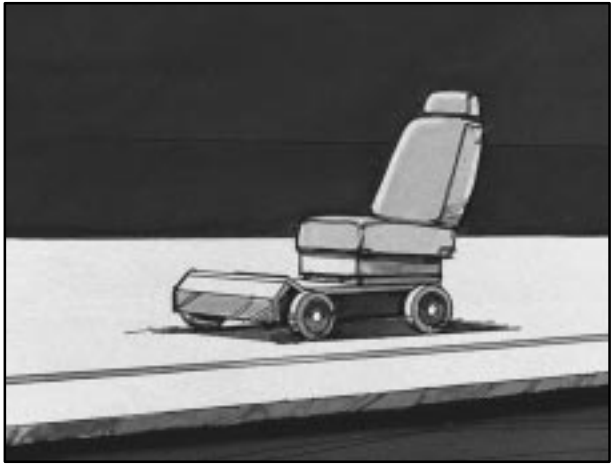

Take the simplest vehicle. Suppose it's just a seat on wheels.

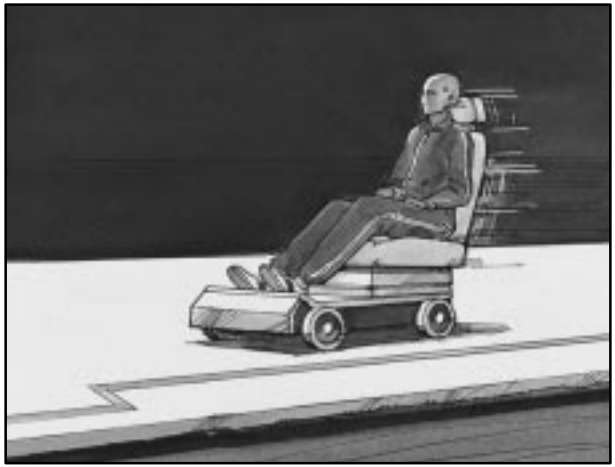

Put someone on it.

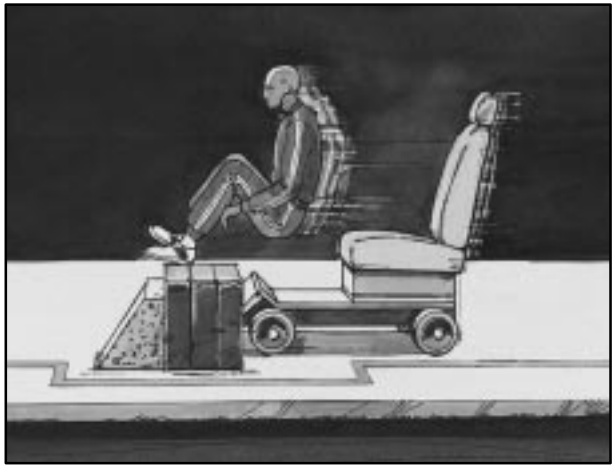

Get it up to speed. Then stop the vehicle. The rider doesn't stop.

The person keeps going until stopped by something. In a real vehicle, it could be the windshield ...

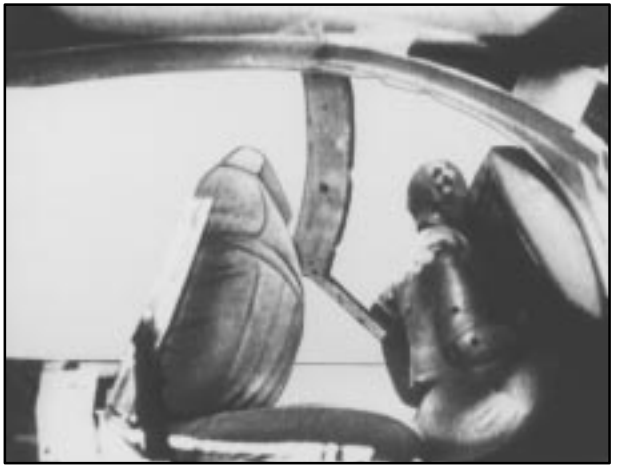

or the instrument panel ...

or the safety belts!

With safety belts, you slow down as the vehicle does. You get more time to stop. You stop over more distance, and your strongest bones take the forces. That's why safety belts make such good sense.

Here Are Questions Many People Ask About Safety Belts -- and the Answers

Q: Won't I be trapped in the vehicle after an accident if I'm wearing a safety belt?

A: You *could* be -- whether you're wearing a safety belt or not. But you can unbuckle a safety belt, even if you're upside down. And your chance of being conscious during and after an accident, so you *can* unbuckle and get out, is *much* greater if you are belted.

Q: If my vehicle has air bags, why should I have to wear safety belts?

A: Air bags are in many vehicles today and will be in most of them in the future. But they are supplemental systems only; so they work *with* safety belts -- not instead of them. Every air bag system ever offered for sale has required the use of safety belts. Even if you're in a vehicle that has air bags, you still have to buckle up to get the most protection. That's true not only in frontal collisions, but especially in side and other collisions.

Q: If I'm a good driver, and I never drive far from home, why should I wear safety belts?

A: You may be an excellent driver, but if you're in an accident -- even one that isn't your fault -- you and your passengers can be hurt. Being a good driver doesn't protect you from things beyond your control, such as bad drivers.

Most accidents occur within 25 miles (40 km) of home. And the greatest number of serious injuries and deaths occur at speeds of less than 40 mph (65 km/h).

Safety belts are for everyone.

How to Wear Safety Belts Properly

Adults

This part is only for people of adult size.

Be aware that there are special things to know about safety belts and children. And there are different rules for smaller children and babies. If a child will be riding in your vehicle, see the part of this manual called "Children." Follow those rules for everyone's protection.

First, you'll want to know which restraint systems your vehicle has.

We'll start with the driver position.

Driver Position

This part describes the driver's restraint system.

Lap-Shoulder Belt

The driver has a lap-shoulder belt. Here's how to wear it properly.

1. Close and lock the door.
2. Adjust the seat so you can sit up straight. To see how, see "Seats" in the Index.

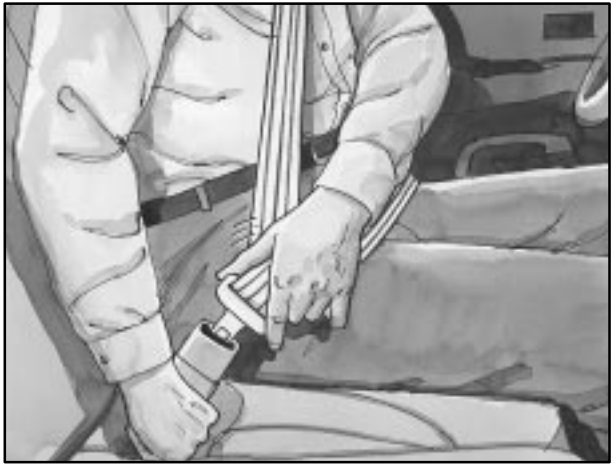

3. Pick up the latch plate and pull the belt across you. Don't let it get twisted.
4. Push the latch plate into the buckle until it clicks.

   Pull up on the latch plate to make sure it is secure. If the belt isn't long enough, see "Safety Belt Extender" at the end of this section.

   Make sure the release button on the buckle is positioned so you would be able to unbuckle the safety belt quickly if you ever had to.

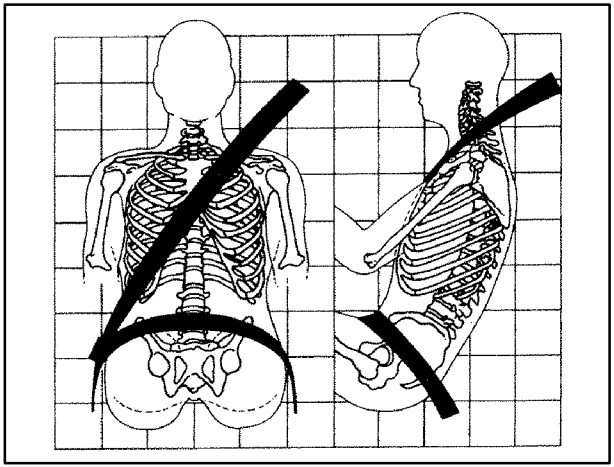

5. To make the lap part tight, pull down on the buckle end of the belt as you pull up on the shoulder belt.

The lap part of the belt should be worn low and snug on the hips, just touching the thighs. In a crash, this applies force to the strong pelvic bones. And you'd be less likely to slide under the lap belt. If you slid under it, the belt would apply force at your abdomen. This could cause serious or even fatal injuries. The shoulder belt should go over the shoulder and across the chest. These parts of the body are best able to take belt restraining forces.

The safety belt locks if there's a sudden stop or a crash.

Q: **What's wrong with this?**

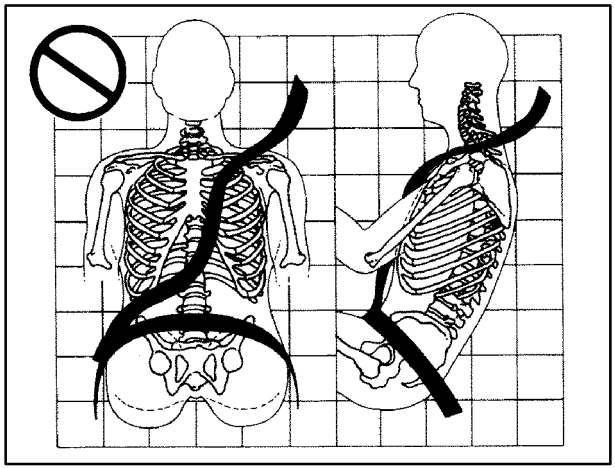

A: The shoulder belt is too loose. It won't give nearly as much protection this way.

⚠ CAUTION:

You can be seriously hurt if your shoulder belt is too loose. In a crash, you would move forward too much, which could increase injury. The shoulder belt should fit against your body.

Q: **What's wrong with this?**

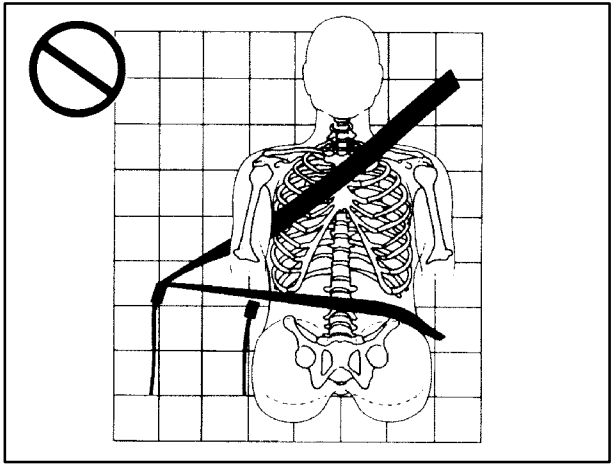

A: The belt is buckled in the wrong place.

⚠ CAUTION:

You can be seriously injured if your belt is buckled in the wrong place like this. In a crash, the belt would go up over your abdomen. The belt forces would be there, not at the pelvic bones. This could cause serious internal injuries. Always buckle your belt into the buckle nearest you.

Q: **What's wrong with this?**

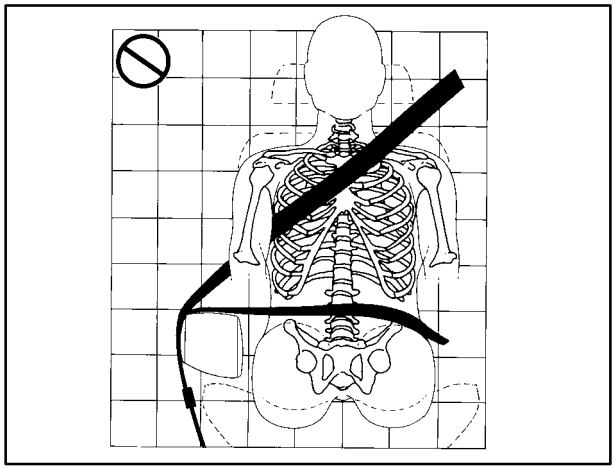

A: The belt is over an armrest.

⚠ CAUTION:

You can be seriously injured if your belt goes over an armrest like this. The belt would be much too high. In a crash, you can slide under the belt. The belt force would then be applied at the abdomen, not at the pelvic bones, and that could cause serious or fatal injuries. Be sure the belt goes under the armrests.

Q: **What's wrong with this?**

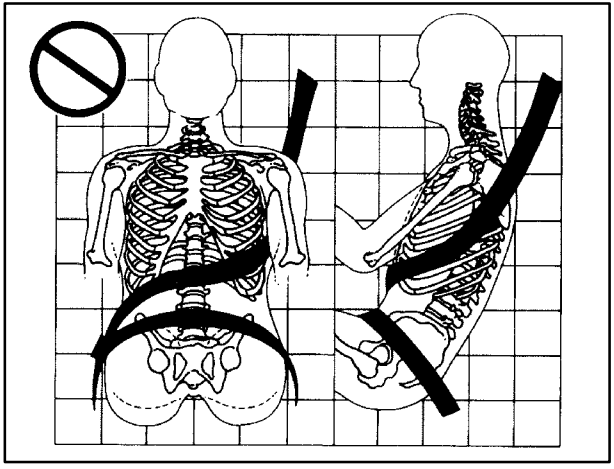

A: The shoulder belt is worn under the arm. It should be worn over the shoulder at all times.

⚠ CAUTION:

You can be seriously injured if you wear the shoulder belt under your arm. In a crash, your body would move too far forward, which would increase the chance of head and neck injury. Also, the belt would apply too much force to the ribs, which aren't as strong as shoulder bones. You could also severely injure internal organs like your liver or spleen.

Q: **What's wrong with this?**

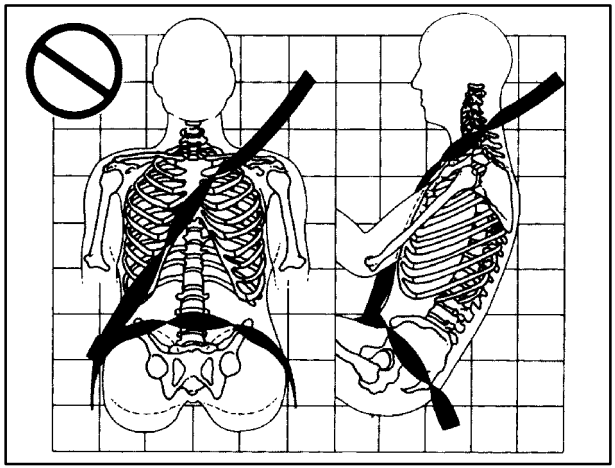

A: The belt is twisted across the body.

⚠ CAUTION:

You can be seriously injured by a twisted belt. In a crash, you wouldn't have the full width of the belt to spread impact forces. If a belt is twisted, make it straight so it can work properly, or ask your dealer to fix it.

To unlatch the belt, just push the button on the buckle. The belt should go back out of the way.

Before you close the door, be sure the belt is out of the way. If you slam the door on it, you can damage both the belt and your vehicle.

Safety Belt Use During Pregnancy

Safety belts work for everyone, including pregnant women. Like all occupants, they are more likely to be seriously injured if they don't wear safety belts.

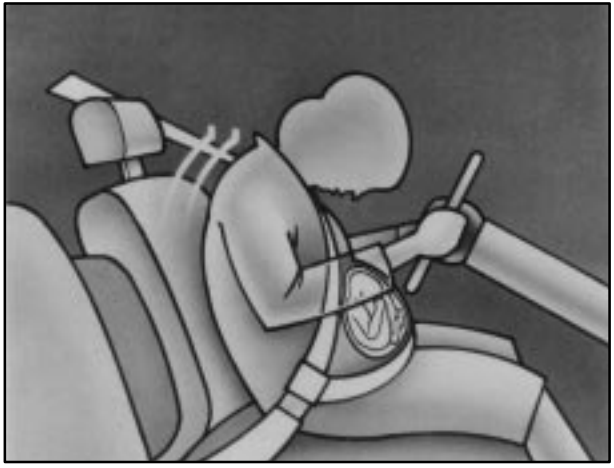

A pregnant woman should wear a lap-shoulder belt, and the lap portion should be worn as low as possible, below the rounding, throughout the pregnancy.

The best way to protect the fetus is to protect the mother. When a safety belt is worn properly, it's more likely that the fetus won't be hurt in a crash. For pregnant women, as for anyone, the key to making safety belts effective is wearing them properly.

Right Front Passenger Position

To learn how to wear the right front passenger's safety belt properly, see "Driver Position" earlier in this section.

The right front passenger's safety belt works the same way as the driver's safety belt -- except for one thing. If you ever pull the shoulder portion of the belt out all the way, you will engage the child restraint locking feature. If this happens, just let the belt go back all the way and start again.

Air Bag Systems

This part explains the frontal and side impact air bag systems.

Your vehicle has four air bags -- a frontal air bag for the driver, another frontal air bag for the right front passenger, a side impact air bag for the driver, and another side impact air bag for the right front passenger.

Frontal air bags are designed to help reduce the risk of injury from the force of an inflating frontal air bag. But these air bags must inflate very quickly to do their job and comply with federal regulations.

Here are the most important things to know about the air bag systems:

⚠ CAUTION:

You can be severely injured or killed in a crash if you aren't wearing your safety belt -- even if you have air bags. Wearing your safety belt during a crash helps reduce your chance of hitting things inside the vehicle or being ejected from it. Air bags are designed to work with safety belts but don't replace them.

CAUTION: (Continued)

CAUTION: (Continued)

Frontal air bags for the driver and right front passenger are designed to work only in moderate to severe crashes where the front of your vehicle hits something. They aren't designed to inflate at all in rollover, rear or low-speed frontal crashes, or in many side crashes. And, for some unrestrained occupants, frontal air bags may provide less protection in frontal crashes than more forceful air bags have provided in the past. The side impact air bags for the driver and right front passenger are designed to inflate only in moderate to severe crashes where something hits the side of your vehicle. They aren't designed to inflate in frontal, in rollover or in rear crashes. Everyone in your vehicle should wear a safety belt properly -- whether or not there's an air bag for that person.

⚠ CAUTION:

Both frontal and side impact air bags inflate with great force, faster than the blink of an eye. If you're too close to an inflating air bag, as you would be if you were leaning forward, it could seriously injure you. Safety belts help keep you in position for air bag inflation before and during a crash. Always wear your safety belt, even with frontal air bags. The driver should sit as far back as possible while still maintaining control of the vehicle. Front occupants should not lean on or sleep against the door.

⚠ CAUTION:

Anyone who is up against, or very close to, any air bag when it inflates can be seriously injured or killed. Air bags plus lap-shoulder belts offer the best protection for adults, but not for young children and infants. Neither the vehicle's safety belt system nor its air bag system is designed for them. Young children and infants need the protection that a child restraint system can provide. Always secure children properly in your vehicle. To read how, see the part of this manual called "Children."

There is an air bag readiness light on the instrument panel, which shows the air bag symbol.

The system checks the air bag electrical system for malfunctions. The light tells you if there is an electrical problem. See "Air Bag Readiness Light" in the Index for more information.

How the Air Bag Systems Work

Where are the air bags?

The driver's frontal air bag is in the middle of the steering wheel.

The right front passenger's frontal air bag is in the instrument panel on the passenger's side.

The driver's side impact air bag is in the side of the driver's seatback closest to the door.

The right front passenger's side impact air bag is in the side of the passenger's seatback closest to the door.

⚠ CAUTION:

If something is between an occupant and an air bag, the bag might not inflate properly or it might force the object into that person causing severe injury or even death. The path of an inflating air bag must be kept clear. Don't put anything between an occupant and an air bag, and don't attach or put anything on the steering wheel hub or on or near any other air bag covering. Don't let seat covers block the inflation path of a side impact air bag.

When should an air bag inflate?

The driver's and right front passenger's frontal air bags are designed to inflate in moderate to severe frontal or near-frontal crashes. But they are designed to inflate only if the impact speed is above the system's designed "threshold level."

If your vehicle goes straight into a wall that doesn't move or deform, the threshold level is about 9 to 16 mph (14 to 26 km/h). The threshold level can vary, however, with specific vehicle design, so that it can be somewhat above or below this range.

If your vehicle strikes something that will move or deform, such as a parked car, the threshold level will be higher. The driver's and right front passenger's frontal air bags are not designed to inflate in rollovers, rear impacts, or in many side impacts because inflation would not help the occupant.

The side impact air bags are designed to inflate in moderate to severe side crashes. A side impact air bag will inflate if the crash severity is above the system's designed "threshold level." The threshold level can vary with specific vehicle design. Side impact air bags are not designed to inflate in frontal or near-frontal impacts, rollovers or rear impacts, because inflation would not help the occupant. A side impact air bag will only deploy on the side of the vehicle that is struck.

In any particular crash, no one can say whether an air bag should have inflated simply because of the damage to a vehicle or because of what the repair costs were. For frontal air bags, inflation is determined by the angle of the impact and how quickly the vehicle slows down in frontal and near-frontal impacts. For side impact air bags, inflation is determined by the location and severity of the impact.

The air bag system is designed to work properly under a wide range of conditions, including off-road usage. Observe safe driving speeds, especially on rough terrain. As always, wear your safety belt. See "Off-Road Driving" in the Index for more tips on off-road driving.

What makes an air bag inflate?

In an impact of sufficient severity, the air bag sensing system detects that the vehicle is in a crash. For both frontal and side impact air bags, the sensing system triggers a release of gas from the inflator, which inflates the air bag. The inflator, air bag and related hardware are all part of the air bag modules inside the steering wheel, instrument panel and the side of the front seatbacks closest to the door.

How does an air bag restrain?

In moderate to severe frontal or near frontal collisions, even belted occupants can contact the steering wheel or the instrument panel. In moderate to severe side collisions, even belted occupants can contact the inside of the vehicle. The air bag supplements the protection provided by safety belts. Air bags distribute the force of the impact more evenly over the occupant's upper body, stopping the occupant more gradually. But the frontal air bags would not help you in many types of collisions, including rollovers, rear impacts, and many side impacts, primarily because an occupant's motion is not toward the air bag. Side impact air bags would not help you in many types of collisions, including frontal or near frontal collisions, rollovers, and rear impacts, primarily because an occupant's motion is not toward those air bags. Air bags should never be regarded as anything more than a supplement to safety belts, and then only in moderate to severe frontal or near-frontal collisions for the driver's and right front passenger's frontal air bags, and only in moderate to severe side collisions for the driver's and right front passenger's side impact air bags.

What will you see after an air bag inflates?

After an air bag inflates, it quickly deflates, so quickly that some people may not even realize the air bag inflated. Some components of the air bag module -- the steering wheel hub for the driver's air bag, the instrument panel for the right front passenger's bag, the side of the seatback closest to the door for the driver and right front passenger's side impact air bags -- will be hot for a short time. The parts of the bag that come into contact with you may be warm, but not too hot to touch. There will be some smoke and dust coming from the vents in the deflated air bags. Air bag inflation doesn't prevent the driver from seeing or being able to steer the vehicle, nor does it stop people from leaving the vehicle.

⚠ CAUTION:

When an air bag inflates, there is dust in the air. This dust could cause breathing problems for people with a history of asthma or other breathing trouble. To avoid this, everyone in the vehicle should get out as soon as it is safe to do so. If you have breathing problems but can't get out of the vehicle after an air bag inflates, then get fresh air by opening a window or a door.

In many crashes severe enough to inflate an air bag, windshields are broken by vehicle deformation. Additional windshield breakage may also occur from the right front passenger air bag.

- Air bags are designed to inflate only once. After an air bag inflates, you'll need some new parts for your air bag system. If you don't get them, the air bag system won't be there to help protect you in another crash. A new system will include air bag modules and possibly other parts. The service manual for your vehicle covers the need to replace other parts.
- Your vehicle is equipped with a crash sensing and diagnostic module, which records information about the frontal air bag system. The module records information about the readiness of the system, when the system commands air bag inflation and driver's safety belt usage at deployment. The module also records speed, engine rpm, brake and throttle data.
- Let only qualified technicians work on your air bag systems. Improper service can mean that an air bag system won't work properly. See your dealer for service.

NOTICE:

If you damage the covering for the driver's or the right front passenger's air bag, or the air bag covering on the driver's and right front passenger's seatback, the bag may not work properly. You may have to replace the air bag module in the steering wheel, both the air bag module and the instrument panel for the right front passenger's air bag, or both the air bag module and seatback for the driver's and right front passenger's side impact air bag. Do not open or break the air bag coverings.

Servicing Your Air Bag-Equipped Vehicle

Air bags affect how your vehicle should be serviced. There are parts of the air bag systems in several places around your vehicle. Your dealer and the service manual have information about servicing your vehicle and the air bag systems. To purchase a service manual, see "Service and Owner Publications" in the Index.

⚠ CAUTION:

For up to 10 minutes after the ignition key is turned off and the battery is disconnected, an air bag can still inflate during improper service. You can be injured if you are close to an air bag when it inflates. Avoid yellow connectors. They are probably part of the air bag systems. Be sure to follow proper service procedures, and make sure the person performing work for you is qualified to do so.

The air bag systems do not need regular maintenance.

Adding Equipment to Your Air Bag-Equipped Vehicle

Q: **If I add a push bumper or bicycle rack to the front of my vehicle, will it keep the air bags from working properly?**

A: As long as the push bumper or bicycle rack is attached to your vehicle so that the vehicle's basic structure isn't changed, it's not likely to keep the air bags from working properly in a crash.

Q: **Is there anything I might add to the front or sides of the vehicle that could keep the air bags from working properly?**

A: Yes. If you add things that change your vehicle's frame, bumper system, front end or side sheet metal or height, they may keep the air bag system from working properly. Also, the air bag system may not work properly if you relocate any of the air bag sensors. If you have any questions about this, you should contact Customer Assistance before you modify your vehicle. The phone numbers and addresses for Customer Assistance are in Step Two of the Customer Satisfaction Procedure in this manual. See "Customer Satisfaction Procedure" in the Index.

Rear Seat Passengers

It's very important for rear seat passengers to buckle up! Accident statistics show that unbelted people in the rear seat are hurt more often in crashes than those who are wearing safety belts.

Rear passengers who aren't safety belted can be thrown out of the vehicle in a crash. And they can strike others in the vehicle who are wearing safety belts.

Rear Seat Outside Passenger Positions

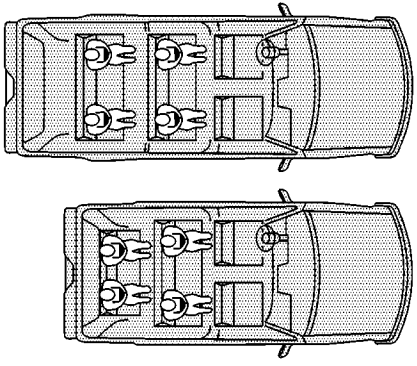

Lap-Shoulder Belt

The positions next to the windows have lap-shoulder belts. Here's how to wear one properly.

1. Pick up the latch plate and pull the belt across you. Don't let it get twisted.

2. Push the latch plate into the buckle until it clicks.

   Pull up on the latch plate to make sure it is secure.

   When the shoulder belt is pulled out all the way, it will lock. If it does, let it go back all the way and start again.

   If the belt is not long enough, see “Safety Belt Extender” at the end of this section.

   Make sure the release button on the buckle is positioned so you would be able to unbuckle the safety belt quickly if you ever had to.

3. To make the lap part tight, pull down on the buckle end of the belt as you pull up on the shoulder part.

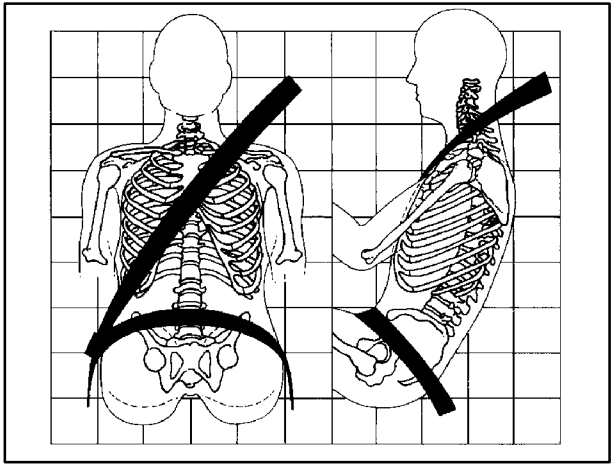

The lap part of the belt should be worn low and snug on the hips, just touching the thighs. In a crash, this applies force to the strong pelvic bones. And you'd be less likely to slide under the lap belt. If you slid under it, the belt would apply force at your abdomen. This could cause serious or even fatal injuries. The shoulder belt should go over the shoulder and across the chest. These parts of the body are best able to take belt restraining forces.

The safety belt locks if there's a sudden stop or a crash.

⚠ CAUTION:

You can be seriously hurt if your shoulder belt is too loose. In a crash, you would move forward too much, which could increase injury. The shoulder belt should fit against your body.

To unlatch the belt, just push the button on the buckle.

Rear Safety Belt Comfort Guides for Children and Small Adults

Rear shoulder belt comfort guides will provide added safety belt comfort for older children who have outgrown booster seats and for small adults. When installed on a shoulder belt, the comfort guide better positions the belt away from the neck and head.

There is one guide for each outside passenger position in the second and third row seats. To provide added safety belt comfort for children who have outgrown child restraints and for smaller adults, the comfort guides may be installed on the shoulder belts.

Here's how to install a comfort guide and use the safety belt:

Second Row Seat

1. For the second row, remove the guide from its storage clip on the trim panel near the side of the seatback.

Third Row Seat

For the third row, remove the guide from its storage clip on the side of the seatback.

2. Place the guide over the belt and insert the two edges of the belt into the slots of the guide.

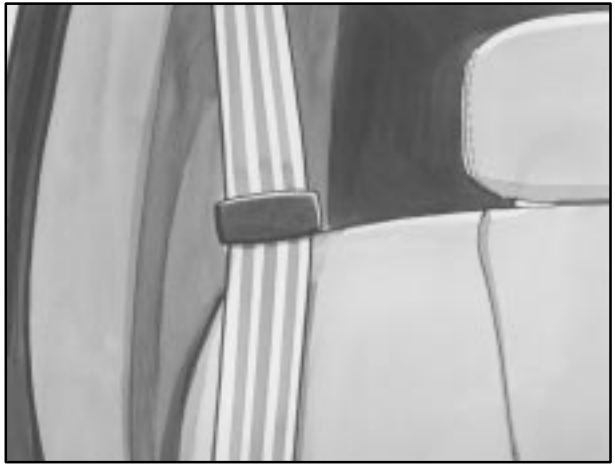

3. Be sure that the belt is not twisted and it lies flat. The guide must be on top of the belt.

Second Row Seat

4. Buckle, position and release the safety belt as described in “Rear Seat Outside Passenger Positions” earlier in this section. Make sure that the shoulder belt crosses the shoulder.

Third Row Seat

To remove and store the comfort guides, squeeze the belt edges together so that you can take them out of the guides. Make sure you remove the comfort guide from the belt before you fold a rear seat down.

Center Passenger Position

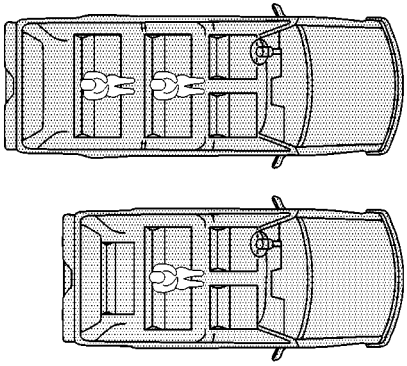

Lap Belt

When you sit in the center seating position, you have a lap safety belt, which has no retractor. To make the belt longer, tilt the latch plate and pull it along the belt.

To make the belt shorter, pull its free end as shown until the belt is snug.

Buckle, position and release it the same way as the lap part of a lap-shoulder belt. If the belt isn't long enough, see "Safety Belt Extender" at the end of this section.

Make sure the release button on the buckle is positioned so you would be able to unbuckle the safety belt quickly if you ever had to.

Children

Everyone in a vehicle needs protection! This includes infants and all other children. Neither the distance traveled nor the age and size of the traveler changes the need, for everyone, to use safety restraints. In fact, the law in every state in the United States and in every Canadian province says children up to some age must be restrained while in a vehicle.

Infants and Young Children

Every time infants and young children ride in vehicles, they should have the protection provided by the appropriate restraint. Young children should not use the vehicle's safety belts, unless there is no other choice.

⚠ CAUTION:

People should never hold a baby in their arms while riding in a vehicle. A baby doesn't weigh much -- until a crash. During a crash a baby will become so heavy it is not possible to hold it. For example, in a crash at only 25 mph (40 km/h), a 12-lb. (5.5 kg) baby will suddenly become a 240-lb. (110 kg) force on a person's arms. A baby should be secured in an appropriate restraint.

⚠ CAUTION:

Children who are up against, or very close to, any air bag when it inflates can be seriously injured or killed. Air bags plus lap-shoulder belts offer outstanding protection for adults and older children, but not for young children and infants. Neither the vehicle's safety belt system nor its air bag system is designed for them. Young children and infants need the protection that a child restraint system can provide.

Q: What are the different types of add-on child restraints?

A: Add-on child restraints, which are purchased by the vehicle's owner, are available in four basic types. Selection of a particular restraint should take into consideration not only the child's weight, height and age but also whether or not the restraint will be compatible with the motor vehicle in which it will be used.

For most basic types of child restraints, there are many different models available. When purchasing a child restraint, be sure it is designed to be used in a motor vehicle. If it is, the restraint will have a label saying that it meets federal motor vehicle safety standards.

The restraint manufacturer's instructions that come with the restraint state the weight and height limitations for a particular child restraint. In addition, there are many kinds of restraints available for children with special needs.

⚠ CAUTION:

Newborn infants need complete support, including support for the head and neck. This is necessary because a newborn infant's neck is weak and its head weighs so much compared with the rest of its body. In a crash, an infant in a rear-facing seat settles into the restraint, so the crash forces can be distributed across the strongest part of an infant's body, the back and shoulders. Infants always should be secured in appropriate infant restraints.

⚠ CAUTION:

The body structure of a young child is quite unlike that of an adult or older child, for whom the safety belts are designed. A young child's hip bones are still so small that the vehicle's regular safety belt may not remain low on the hip bones, as it should. Instead, it may settle up around the child's abdomen. In a crash, the belt would apply force on a body area that's unprotected by any bony structure. This alone could cause serious or fatal injuries. Young children always should be secured in appropriate child restraints.

Restraint Systems for Children

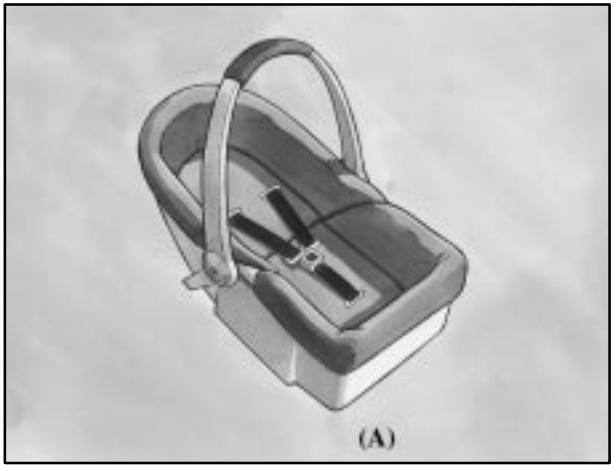

An infant car bed (A), a special bed made for use in a motor vehicle, is an infant restraint system designed to restrain or position a child on a continuous flat surface. Make sure that the infant's head rests toward the center of the vehicle.

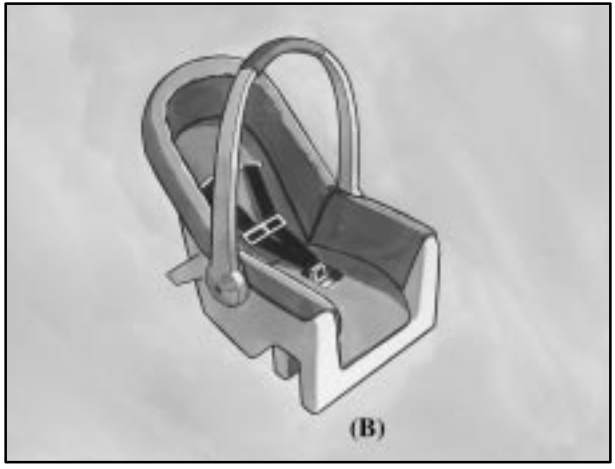

A rear-facing infant seat (B) provides restraint with the seating surface against the back of the infant. The harness system holds the infant in place and, in a crash, acts to keep the infant positioned in the restraint.

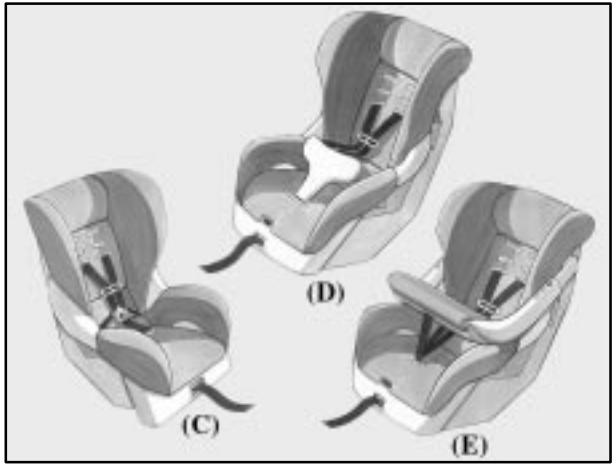

A forward-facing child seat (C-E) provides restraint for the child's body with the harness and also sometimes with surfaces such as T-shaped or shelf-like shields.

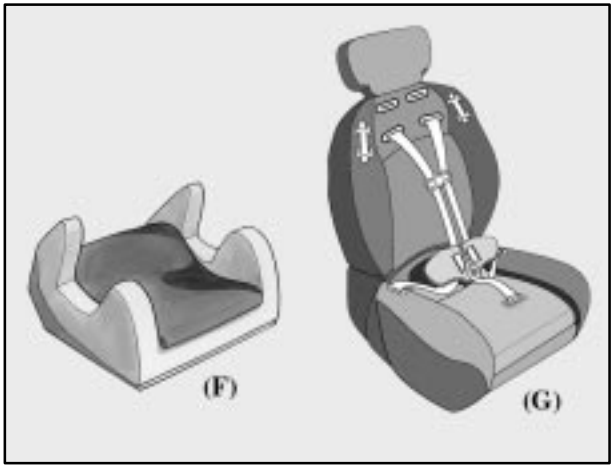

A booster seat (F-G) is a child restraint designed to improve the fit of the vehicle's safety belt system. Some booster seats have a shoulder belt positioner, and some high-back booster seats have a five-point harness. A booster seat can also help a child to see out the window.

Q: How do child restraints work?

A: A child restraint system is any device designed for use in a motor vehicle to restrain, seat, or position children. A built-in child restraint system is a permanent part of the motor vehicle. An add-on child restraint system is a portable one, which is purchased by the vehicle's owner.

For many years, add-on child restraints have used the adult belt system in the vehicle. To help reduce the chance of injury, the child also has to be secured within the restraint. The vehicle's belt system secures the add-on child restraint in the vehicle, and the add-on child restraint's harness system holds the child in place within the restraint.

One system, the three-point harness, has straps that come down over each of the infant's shoulders and buckle together at the crotch. The five-point harness system has two shoulder straps, two hip straps and a crotch strap. A shield may take the place of hip straps. A T-shaped shield has shoulder straps that are attached to a flat pad which rests low against the child's body. A shelf- or armrest-type shield has straps that are attached to a wide, shelf-like shield that swings up or to the side.

When choosing a child restraint, be sure the child restraint is designed to be used in a vehicle. If it is, it will have a label saying that it meets federal motor vehicle safety standards.

Then follow the instructions for the restraint. You may find these instructions on the restraint itself or in a booklet, or both. These restraints use the belt system in your vehicle, but the child also has to be secured within the restraint to help reduce the chance of personal injury. When securing an add-on child restraint, refer to the instructions that come with the restraint which may be on the restraint itself or in a booklet, or both, and to this manual. The child restraint instructions are important, so if they are not available, obtain a replacement copy from the manufacturer.

Where to Put the Restraint

Accident statistics show that children are safer if they are restrained in the rear rather than the front seat. General Motors, therefore, recommends that child restraints be secured in a rear seat including an infant riding in a rear-facing infant seat, a child riding in a forward-facing child seat and an older child riding in a booster seat. *Never* put a rear-facing child restraint in the right front passenger seat. Here's why:

⚠ CAUTION:

A child in a rear-facing child restraint can be seriously injured or killed if the right front passenger's air bag inflates. This is because the back of the rear-facing child restraint would be very close to the inflating air bag. Always secure a rear-facing child restraint in a rear seat.

You may secure a forward-facing child restraint in the right front seat, but before you do, always move the front passenger seat as far back as it will go. It's better to secure the child restraint in a rear seat.

Wherever you install it, be sure to secure the child restraint properly.

Keep in mind that an unsecured child restraint can move around in a collision or sudden stop and injure people in the vehicle. Be sure to properly secure any child restraint in your vehicle -- even when no child is in it.

Top Strap

Some child restraints have a top strap, or “top tether.” It can help restrain the child restraint during a collision. For it to work, a top strap must be properly anchored to the vehicle. Some top strap-equipped child restraints are designed for use with or without the top strap being anchored. Others require the top strap always to be anchored. Be sure to read and follow the instructions for your child restraint. If yours requires that the top strap be anchored, don’t use the restraint unless it is anchored properly.

If the child restraint does not have a top strap, one can be obtained, in kit form, for many child restraints. Ask the child restraint manufacturer whether or not a kit is available.

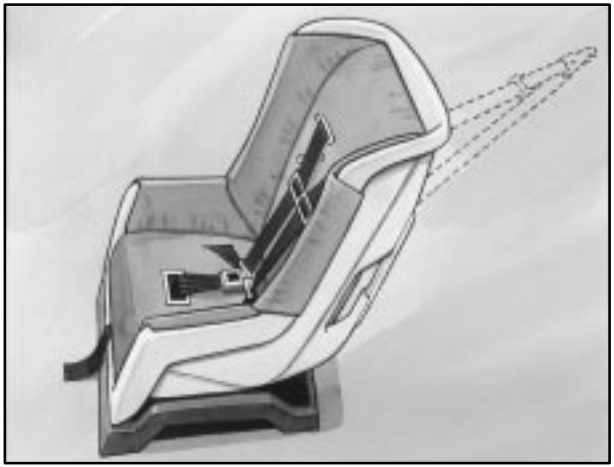

In Canada, the law requires that forward-facing child restraints have a top strap, and that the strap be anchored. In the United States, some child restraints also have a top strap. If your child restraint has a top strap, it should be anchored.

Anchor the top strap to one of the following anchor points. Be sure to use an anchor point located on the same side of the vehicle as the seating position where the child restraint will be placed. If you have an adjustable head restraint, route the top strap under it.

Once you have the top strap anchored, you'll be ready to secure the child restraint itself. Tighten the top strap when and as the child restraint manufacturer's instructions say.

Yukon XL Denali models: A child restraint with a top strap should only be used in the second or third row. Don't use a child restraint with a top strap in the front seat because there's no place to anchor the top strap.

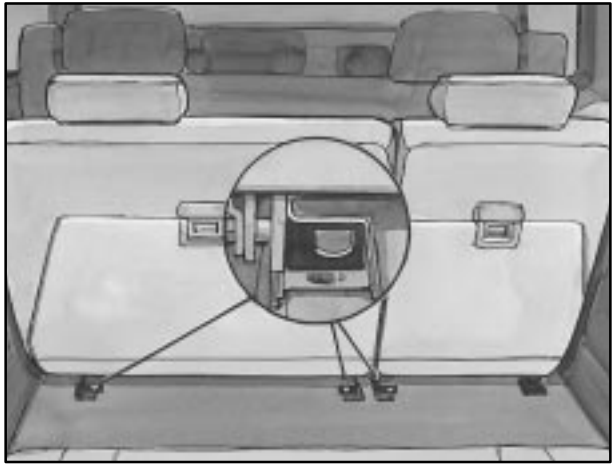

Yukon XL Denali Second Row Seat
Bucket Seats Similar

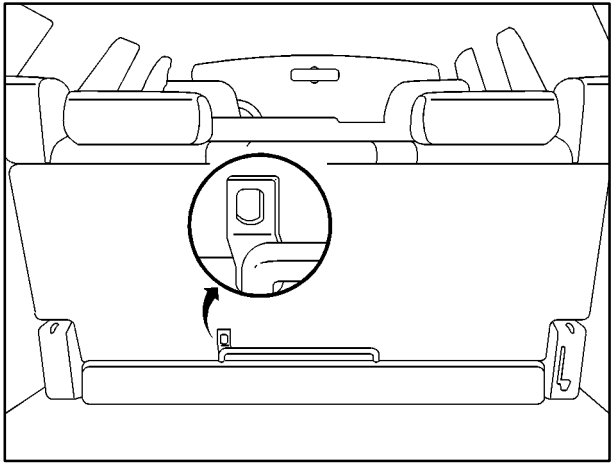

Denali XL Third Row Seat

An anchor loop bracket for a top strap is located at the bottom rear of the seat cushion for each seating position in the second row, and for the center seating position in the third row.

Yukon Denali models: A child restraint with a top strap should only be used in the second row. Don't use a child restraint with a top strap in the right front passenger's position or in the third row, because there's no place to anchor the top strap.

An anchor loop bracket for a top strap is located at the bottom rear of the seat cushion for each seating position in the second row.

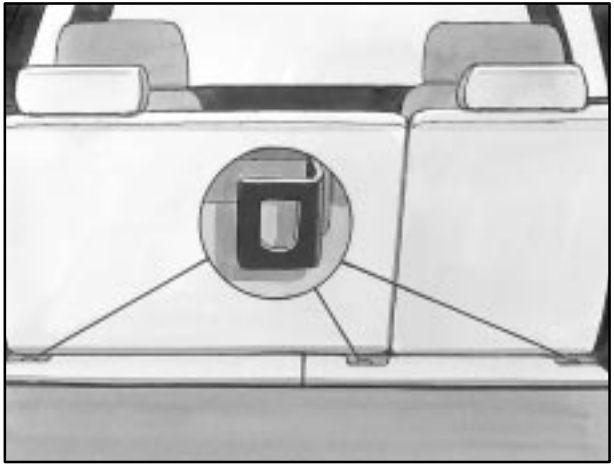

Yukon Denali Second Row Seat

Lower Anchorages and Top Tethers for Children (LATCH System)

Your vehicle has the LATCH system. You'll find anchors (A) in the outboard positions for the second row seats where the seatback meets the seat cushion.

To assist you in locating the lower anchors for this child restraint system, each seating position with the LATCH system will have a visible metal anchorage point.

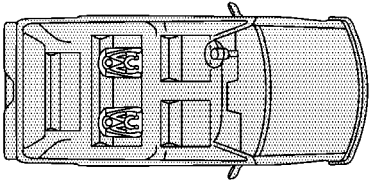

In order to use the system, you need either a forward-facing child restraint that has attaching points (B) at its base and a top tether anchor (C), or a rear-facing child restraint that has attaching points (B), as shown here.

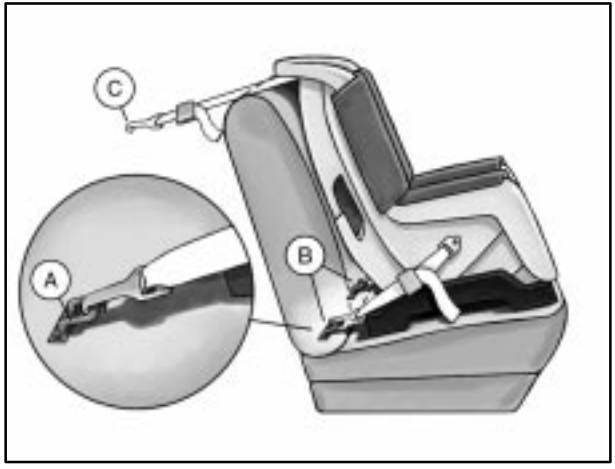

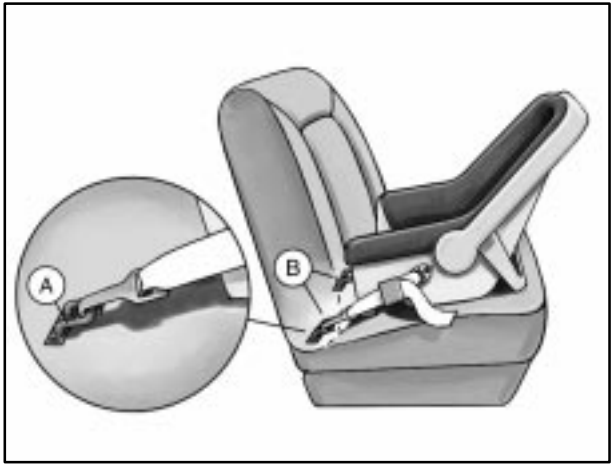

With this system, use the LATCH system instead of the vehicle's safety belts to secure a child restraint.

⚠ CAUTION:

If a LATCH-type child restraint isn't attached to its anchorage points, the restraint won't be able to protect a child sitting there. In a crash, the child could be seriously injured or killed. Make sure that a LATCH-type child restraint is properly installed using the anchorage points, or use the vehicle's safety belts to secure the restraint. See "Securing a Child Restraint in the Rear Seat" in the Index for information on how to secure a child restraint in your vehicle using the vehicle's safety belts.

Securing a Child Restraint Designed for the LATCH System

1. Find the anchors for the seating position you want to use, where the bottom of the seatback meets the back of the seat cushion.
2. Put the child restraint on the seat.
3. Attach the anchor points on the child restraint to the anchors in the vehicle. The child restraint instructions will show you how.
4. If the child restraint is forward-facing, attach the top strap to the top strap anchor. See "Top Strap" in the Index. Tighten the top strap according to the child restraint instructions.
5. Push and pull the child restraint in different directions to be sure it is secure.

To remove the child restraint, simply unhook the top strap from the top tether anchor and then disconnect the anchor points.

Securing a Child Restraint in a Rear Outside Seat Position

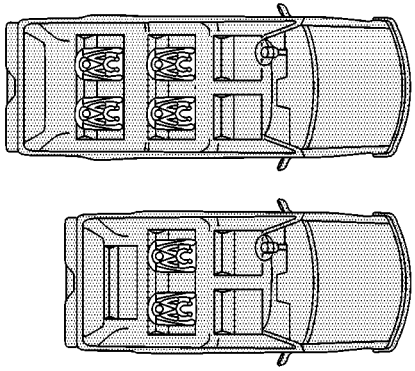

If your child restraint is equipped with the LATCH system, see “Lower Anchorages and Top Tethers for Children (LATCH)” in the Index.

You’ll be using the lap-shoulder belt. See the earlier part about the top strap if the child restraint has one. Be sure to follow the instructions that came with the child restraint. Secure the child in the child restraint when and as the instructions say.

1. Put the restraint on the seat.
2. Pick up the latch plate, and run the lap and shoulder portions of the vehicle’s safety belt through or around the restraint. The child restraint instructions will show you how.

   If the shoulder belt goes in front of the child’s face or neck, put it behind the child restraint.

3. Buckle the belt. Make sure the release button is positioned so you would be able to unbuckle the safety belt quickly if you ever had to.

4. Pull the rest of the shoulder belt all the way out of the retractor to set the lock.

5. To tighten the belt, feed the shoulder belt back into the retractor while you push down on the child restraint. If you're using a forward-facing child restraint, you may find it helpful to use your knee to push down on the child restraint as you tighten the belt.
6. Push and pull the child restraint in different directions to be sure it is secure.

To remove the child restraint, just unbuckle the vehicle's safety belt and let it go back all the way. The safety belt will move freely again and be ready to work for an adult or larger child passenger.

Securing a Child Restraint in a Center Rear Seat Position

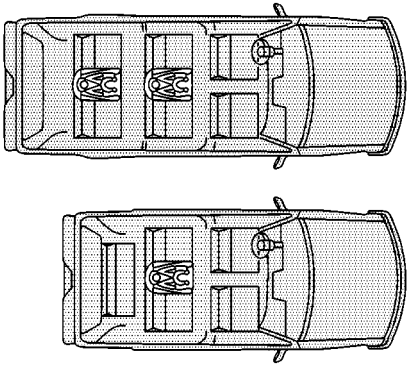

You'll be using the lap belt. Be sure to follow the instructions that came with the child restraint. Secure the child in the child restraint when and as the instructions say.

See the earlier part about the top strap if the child restraint has one.

1. Make the belt as long as possible by tilting the latch plate and pulling it along the belt.
2. Put the restraint on the seat.
3. Run the vehicle's safety belt through or around the restraint. The child restraint instructions will show you how.

4. Buckle the belt. Make sure the release button is positioned so you would be able to unbuckle the safety belt quickly if you ever had to.
5. To tighten the belt, pull its free end while you push down on the child restraint. If you're using a forward-facing child restraint, you may find it helpful to use your knee to push down on the child restraint as you tighten the belt.
6. Push and pull the child restraint in different directions to be sure it is secure.

To remove the child restraint, just unbuckle the vehicle's safety belt. It will be ready to work for an adult or larger child passenger.

Securing a Child Restraint in the Right Front Seat Position

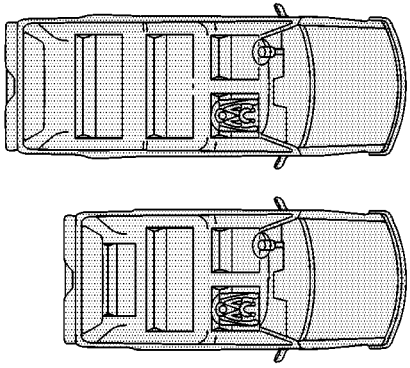

Your vehicle has a right front passenger air bag. *Never* put a rear-facing child restraint in this seat. Here's why:

⚠ CAUTION:

A child in a rear-facing child restraint can be seriously injured or killed if the right front passenger's air bag inflates. This is because the back of the rear-facing child restraint would be very close to the inflating air bag. Always secure a rear-facing child restraint in the rear seat.

Although a rear seat is a safer place, you can secure a forward-facing child restraint in the right front seat.

You'll be using the lap-shoulder belt. See the earlier part about the top strap if the child restraint has one. Be sure to follow the instructions that came with the child restraint. Secure the child in the child restraint when and as the instructions say.

1. Because your vehicle has a right front passenger air bag, always move the seat as far back as it will go before securing a forward-facing child restraint. See "Seats" in the Index.
2. Put the restraint on the seat.

3. Pick up the latch plate, and run the lap and shoulder portions of the vehicle's safety belt through or around the restraint. The child restraint instructions will show you how.

   If the shoulder belt goes in front of the child's face or neck, put it behind the child restraint.

4. Buckle the belt. Make sure the release button is positioned so you would be able to unbuckle the safety belt quickly if you ever had to.

5. Pull the rest of the shoulder belt all the way out of the retractor to set the lock.

6. To tighten the belt, feed the shoulder belt back into the retractor while you push down on the child restraint. You may find it helpful to use your knee to push down on the child restraint as you tighten the belt.
7. Push and pull the child restraint in different directions to be sure it is secure.

To remove the child restraint, just unbuckle the vehicle's safety belt and let it go back all the way. The safety belt will move freely again and be ready to work for an adult or larger child passenger.

Older Children

Older children who have outgrown booster seats should wear the vehicle's safety belts.

If you have the choice, a child should sit next to a window so the child can wear a lap-shoulder belt and get the additional restraint a shoulder belt can provide.

Q: **What is the proper way to wear safety belts?**

A: If possible, an older child should wear a lap-shoulder belt and get the additional restraint a shoulder belt can provide. The shoulder belt should not cross the face or neck. The lap belt should fit snugly below the hips, just touching the top of the thighs. It should never be worn over the abdomen, which could cause severe or even fatal internal injuries in a crash.

Accident statistics show that children are safer if they are restrained in the rear seat.

In a crash, children who are not buckled up can strike other people who are buckled up, or can be thrown out of the vehicle. Older children need to use safety belts properly.

⚠ CAUTION:

Never do this.

Here two children are wearing the same belt. The belt can't properly spread the impact forces. In a crash, the two children can be crushed together and seriously injured. A belt must be used by only one person at a time.

Q: **What if a child is wearing a lap-shoulder belt, but the child is so small that the shoulder belt is very close to the child's face or neck?**

A: Move the child toward the center of the vehicle, but be sure that the shoulder belt still is on the child's shoulder, so that in a crash the child's upper body would have the restraint that belts provide. If the child is sitting in a rear seat outside position, see "Rear Safety Belt Comfort Guides" in the Index. If the child is so small that the shoulder belt is still very close to the child's face or neck, you might want to place the child in a seat that has a lap belt, if your vehicle has one.

⚠ CAUTION:

Never do this.

Here a child is sitting in a seat that has a lap-shoulder belt, but the shoulder part is behind the child. If the child wears the belt in this way, in a crash the child might slide under the belt. The belt's force would then be applied right on the child's abdomen. That could cause serious or fatal injuries.

Wherever the child sits, the lap portion of the belt should be worn low and snug on the hips, just touching the child's thighs. This applies belt force to the child's pelvic bones in a crash.

Safety Belt Extender

If the vehicle's safety belt will fasten around you, you should use it.

But if a safety belt isn't long enough to fasten, your dealer will order you an extender. It's free. When you go in to order it, take the heaviest coat you will wear, so the extender will be long enough for you. The extender will be just for you, and just for the seat in your vehicle that you choose. Don't let someone else use it, and use it only for the seat it is made to fit. To wear it, just attach it to the regular safety belt.

Checking Your Restraint Systems

Now and then, make sure the safety belt reminder light and all your belts, buckles, latch plates, retractors and anchorages are working properly. Look for any other loose or damaged safety belt system parts. If you see anything that might keep a safety belt system from doing its job, have it repaired.

Torn or frayed safety belts may not protect you in a crash. They can rip apart under impact forces. If a belt is torn or frayed, get a new one right away.

Also look for any opened or broken air bag covers, and have them repaired or replaced. (The air bag system does not need regular maintenance.)

Replacing Restraint System Parts After a Crash

If you've had a crash, do you need new belts or LATCH system parts?

After a very minor collision, nothing may be necessary. But if the belts were stretched, as they would be if worn during a more severe crash, then you need new parts.

If the LATCH system was being used during a more severe crash, you may need new LATCH system parts.

If belts are cut or damaged, replace them. Collision damage also may mean you will need to have LATCH system, safety belt or seat parts repaired or replaced. New parts and repairs may be necessary even if the belt or LATCH system wasn't being used at the time of the collision.

If an air bag inflates, you'll need to replace air bag system parts. See the part on the air bag system earlier in this section.

Section 2 Features and Controls

Here you can learn about the many standard and optional features on your vehicle, and information on starting, shifting and braking. Also explained are the instrument panel and the warning systems that tell you if everything is working properly -- and what to do if you have a problem.

2-2 Windows
2-4 Keys
2-6 Door Locks
2-9 Keyless Entry System
2-12 Liftgate/Liftgate Glass
2-12 Theft
2-14 Content Theft-Deterrent
2-15 Passlock®
2-16 New Vehicle “Break In”
2-16 Ignition Positions
2-17 Starting Your Engine
2-19 Engine Coolant Heater (If Equipped)
2-20 Automatic Transmission Operation
2-23 Parking Brake
2-24 Shifting Into PARK (P)
2-27 Shifting Out of PARK (P)
2-27 Parking Over Things That Burn
2-28 Engine Exhaust
2-28 Running Your Engine While You’re Parked
2-30 Locking Rear Axle
2-30 All-Wheel Drive
2-30 Tilt Wheel
2-31 Turn Signal/Multifunction Lever
2-37 Exterior Lamps
2-41 Interior Lamps
2-42 Mirrors
2-46 Storage Compartments
2-54 OnStar® System (If Equipped)
2-57 Sunroof (If Equipped)
2-58 HomeLink® Transmitter
2-62 The Instrument Panel - Your Information System
2-64 Instrument Panel Cluster
2-65 Warning Lights, Gages and Indicators
2-77 Message Center
2-83 Secondary Information Center (SIC)

Windows

⚠ CAUTION:

Leaving children in a vehicle with the windows closed is dangerous. A child can be overcome by the extreme heat and can suffer permanent injuries or even death from heat stroke. Never leave a child alone in a vehicle, especially with the windows closed in warm or hot weather.

Power Windows

The switches to operate all of the power windows are located on the driver's door armrest. The front passenger's door and the rear side doors also each have an individual power window switch.

Your power windows will work when the ignition has been turned to ACCESSORY or RUN or when Retained Accessory Power (RAP) is active. See "Retained Accessory Power" in the Index.

Press the rear or front of the switch with the power window symbol on it to lower or raise the window.

Driver's Express-Down Window

The driver's window has an express down feature that allows the window to be lowered without holding the switch. Press and hold the rear of the power window switch for one second to activate the express down mode. The express down mode can be canceled at any time by pressing the opposite side of the switch. To open the window partway, lightly tap the power window switch until the window is at the desired position.

Window Lockout Switch

The driver's door power window switch has a lockout feature. This feature prevents the passenger's windows from operating except from the driver's position when the driver's door button labeled WINDOW LOCK is engaged.

Keys

⚠ CAUTION:

Leaving children in a vehicle with the ignition key is dangerous for many reasons. A child or others could be badly injured or even killed.

They could operate the power windows or other controls or even make the vehicle move. Don't leave the keys in a vehicle with children.

Your vehicle has one double-sided key for the ignition and all door locks as well as the spare tire hoist lock.

Your vehicle also has a key that locks and unlocks the console storage area only.

If you ever lose your keys, your dealer will be able to assist you with obtaining replacements.

In an emergency contact roadside assistance. See “Roadside Assistance” in the Index for more information.

If you ever lock your keys in your vehicle, you may be able to have your doors unlocked automatically with the OnStar system if you have an active OnStar® subscription. For more information see “OnStar” in the Index.

Door Locks

⚠ CAUTION:

Unlocked doors can be dangerous.

- **Passengers -- especially children -- can easily open the doors and fall out of a moving vehicle. When a door is locked, the handle won't open it. You increase the chance of being thrown out of the vehicle in a crash if the doors aren't locked. So, wear safety belts properly and lock the doors whenever you drive.**
- **Young children who get into unlocked vehicles may be unable to get out. A child can be overcome by extreme heat and can suffer permanent injuries or even death from heat stroke. Always lock your vehicle whenever you leave it.**
- **Outsiders can easily enter through an unlocked door when you slow down or stop your vehicle. Locking your doors can help prevent this from happening.**

There are several ways to lock and unlock your vehicle.

To unlock the door form the outside, use the keyless entry system or the key.

To unlock the door from the inside, slide the manual lever forward. To lock the door, slide the manual lever rearward.

Power Door Locks

Press the raised side of the switch, marked L on either front door to lock all the doors at once.

Press the recessed side of the switch marked U to unlock all the doors at once.

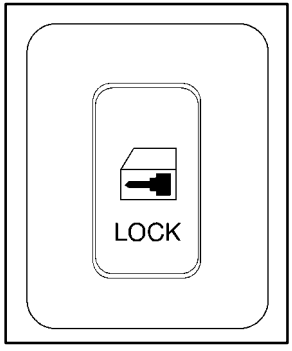

On the passenger side of the liftgate opening trim there is a power lock switch which can be used to lock or unlock all of the doors.

The power door locks will operate at any time without the ignition being on.

Programmable Locks

The power door locks can be programmed to automatically lock and unlock depending on the settings you have chosen in the Secondary Information Center (SIC). See “Secondary Information Center” in the Index for more information.

Operating the power locks may interact with the theft-deterrent system. See “Content Theft-Deterrent” in the Index.

Lockout Prevention

This feature protects you from locking your key in the vehicle when the key is in the ignition and a door is open.

If the power lock switch is pressed when a door is open and the key is in the ignition, all of the doors will lock and then the driver’s door will unlock.

Child Security Locks

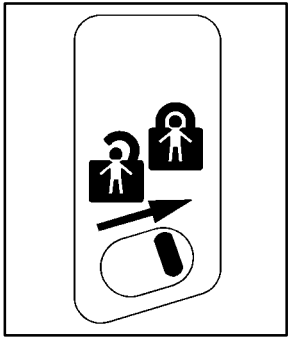

You will find a security lock lever on the inside edge of each rear door. Your vehicle may be equipped with one of the two labels shown.

With this feature, you can lock the rear doors so they cannot be opened from the inside by passengers. To use the security locks do the following:

1. Open one of the rear doors.
2. Move the lever up to engage the security lock. Move the lever down to disengage the security lock.
3. Close the door.
4. Do the same thing to the other rear door.

The rear doors on your vehicle cannot be opened from the inside when this feature is in use. If you want to open the rear door when the security lock is on, unlock the door and open the door from the outside.

Keyless Entry System

You can lock and unlock your doors and liftgate from about 3 feet (1 m) up to 30 feet (9 m) away using the remote keyless entry transmitter supplied with your vehicle.

Your keyless entry system operates on a radio frequency subject to Federal Communications Commission (FCC) Rules and with Industry Canada.

This device complies with Part 15 of the FCC Rules. Operation is subject to the following two conditions: (1) this device may not cause harmful interference, and (2) this device must accept any interference received, including interference that may cause undesired operation.

This device complies with RSS-210 of Industry Canada. Operation is subject to the following two conditions: (1) this device may not cause interference, and (2) this device must accept any interference received, including interference that may cause undesired operation of the device.

Changes or modifications to this system by other than an authorized service facility could void authorization to use this equipment.

At times you may notice a decrease in range. This is normal for any remote keyless entry system. If the transmitter does not work or if you have to stand closer to your vehicle for the transmitter to work, try this:

- Check the distance. You may be too far from your vehicle. You may need to stand closer during rainy or snowy weather.
- Check the location. Other vehicles or objects may be blocking the signal. Take a few steps to the left or right, hold the transmitter higher, and try again.
- Check to determine if battery replacement or resynchronization is necessary. See the instructions that follow.
- If you're still having trouble, see your dealer or a qualified technician for service.

Operation

UNLOCK: Pressing this button once will unlock the driver's door. The interior lamps will come on. Pressing UNLOCK again within three seconds will cause the remaining doors to unlock.

You can choose different feedback options for each press of the UNLOCK button, such as having the perimeter lamps come on and/or have the horn chirp. See "Secondary Information Center" in the Index for more information.

LOCK: Pressing this button once will lock all of the doors. You can choose different feedback options for each press of the LOCK button, such as having the perimeter lamps come on and/or have the horn chirp. See "Secondary Information Center" in the Index for more information.

Operating the keyless entry transmitter may interact with the theft-deterrent system. See "Content-Theft Deterrent" and "Secondary Information Center" in the Index for more information.

Remote Panic Alarm

When the horn symbol on the remote keyless entry transmitter is pressed, the horn will sound and the headlamps and taillamps will flash for up to 30 seconds. This can be turned off by pressing the horn symbol again, waiting for 30 seconds, or starting the vehicle.

Matching Transmitter(s) to Your Vehicle

Each remote keyless entry transmitter is coded to prevent another transmitter from unlocking your vehicle. If a transmitter is lost or stolen, a replacement can be purchased through your dealer. Remember to bring any remaining transmitters with you when you go to your dealer. When the dealer matches the replacement transmitter to your vehicle, any remaining transmitters must also be matched. Once your dealer has coded the new transmitter, the lost transmitter will not unlock your vehicle. Each vehicle can have a maximum of four transmitters matched to it.

Battery Replacement

Under normal use, the battery in your remote keyless entry transmitter should last about two years.

You can tell the battery is weak if the transmitter won't work at the normal range in any location. If you have to get close to your vehicle before the transmitter works, it's probably time to change the battery.

NOTICE:

When replacing the battery, use care not to touch any of the circuitry. Static from your body transferred to these surfaces may damage the transmitter.

To replace the battery in the keyless entry transmitter, do the following:

1. Insert a thin object, such as a coin, in the slot between the covers of the transmitter housing near the key ring hole. Remove the bottom by twisting the coin.
2. Remove and replace the battery with a three-volt CR2032 or equivalent battery, positive (+) side up.
3. Align the covers and snap them together.
4. Check the operation of the transmitter.

Liftgate/Liftgate Glass

⚠ CAUTION:

It can be dangerous to drive with the liftgate or liftgate glass open because carbon monoxide (CO) gas can come into your vehicle. You can't see or smell CO. It can cause unconsciousness and even death.

If you must drive with the liftgate or liftgate glass open or if electrical wiring or other cable connections must pass through the seal between the body and the liftgate or liftgate glass:

- **Make sure all other windows are shut.**
- **Turn the fan on your heating or cooling system to its highest speed with the setting on VENT or OUTSIDE AIR. That will force outside air into your vehicle. See "Comfort Controls" in the Index.**
- **If you have air outlets on or under the instrument panel, open them all the way.**

See "Engine Exhaust" in the Index.

To open from the outside, insert the key into the lock and turn it counterclockwise to unlock the glass and liftgate.

The liftgate glass can be opened using the pushbutton on the liftgate after the doors have been unlocked. This can be done by using either the power door locks or the remote keyless entry system.

To open the entire liftgate, lift the handle located in the center of the door.

To lock from the outside, insert the key into the lock button and turn clockwise. All doors will lock. You may also use the remote keyless entry system or the power door locks to lock the liftgate and liftgate glass.

Theft

Vehicle theft is big business, especially in some cities. Although your vehicle has a number of theft-deterrent features, we know that nothing we put on it can make it impossible to steal. However, there are ways you can help.

Key in the Ignition

If you leave your vehicle with the keys inside, it's an easy target for joy riders or professional thieves -- so don't do it.

When you park your vehicle and open the driver's door, you'll hear a chime reminding you to remove your key from the ignition and take it with you. Always do this. Your ignition and will be locked. Also remember to lock the doors.

If the key is in the ignition, with any door open, and you try to lock your doors with the power door locks, the driver's door will not stay locked. This will help to keep you from locking your keys in the vehicle.

Parking at Night

Park in a lighted spot, close all windows and lock your vehicle. Remember to keep your valuables out of sight. Put them in a storage area, or take them with you.

Parking Lots

Even if you park in a lot where someone will be watching your vehicle, it's still best to lock it up and take your keys. But what if you have to leave your ignition key? What if you have to leave something valuable in your vehicle?

- Put your valuables in a storage area, like your glove box.
- Valuables can be locked in the console storage area.
- Take the remote keyless entry system transmitter with you.
- Lock all the doors except the driver's.

Content Theft-Deterrent

Your vehicle is equipped with a content theft-deterrent alarm system.

SECURITY

With this system, the SECURITY message will flash as you open the door (if your ignition is off).

This message reminds you to activate the theft-deterrent system. Here's how to do it:

1. Open the door.
2. Lock the door with the power door lock switch or the remote keyless entry transmitter. The SECURITY message should come on and stay on. If you are using the remote keyless entry transmitter, the door does not need to be open.
3. Close all doors. The SECURITY message should go off after approximately 15 seconds. The alarm is not armed until the SECURITY message goes off.

If a door is opened without the key or the remote keyless entry transmitter, the alarm will go off. Depending on how you have programmed the alarm in the secondary information center, the horn may sound, the headlamps may flash or both the headlamps and the horn will activate. See "Secondary Information Center" in the Index for more information.

Remember, the theft-deterrent system won't activate if you lock the doors with a key or use the manual door lock. It activates only if you use a power door lock switch with the door open, or with the remote keyless entry transmitter. You should also remember that you can start your vehicle with the correct ignition key if the alarm has been set off.

Here's how to avoid setting off the alarm by accident:

- If you don't want to activate the theft-deterrent system, the vehicle should be locked with the door key after the doors are closed.
- Always unlock a door with a key, or use the remote keyless entry transmitter. Unlocking a door any other way will set off the alarm if the system has been armed.

If you set off the alarm by accident, unlock any door with the key. You can also turn off the alarm by pressing UNLOCK on the remote keyless entry transmitter or by placing the key in the ignition and turning it to START.

Testing the Alarm

The alarm can be tested by following these steps:

1. From inside the vehicle, lower the driver's window and open the driver's door.
2. Activate the system by locking the doors with the power door lock switch while the door is open, or with the remote keyless entry transmitter.
3. Get out of the vehicle, close the door and wait for the SECURITY message to go out.
4. Then reach in through the window, unlock the door with the manual door lock and open the door. This should set off the alarm.

If the alarm does not sound when it should but the headlamps flash, check to see if the horn works. The horn fuse may be blown. To replace the fuse, see "Fuses and Circuit Breakers" in the Index.

If the alarm does not sound or the headlamps do not flash, the vehicle should be serviced by an authorized service center.

Passlock®

Your vehicle is equipped with the Passlock theft-deterrent system.

Passlock is a passive theft-deterrent system. Passlock enables fuel if the ignition lock cylinder is turned with a valid key. If a correct key is not used or the ignition lock cylinder is tampered with, fuel is disabled.

If the engine stalls and the SECURITY message flashes, wait until the message stops flashing before trying to restart the engine. Remember to release the key from START as soon as the engine starts.

If the engine is running and the SECURITY message comes on, you will be able to restart the engine if you turn the engine off. However, your Passlock system is not working properly and must be serviced by your dealer. Your vehicle is not protected by Passlock at this time. You may also want to check the fuse (see "Fuses and Circuit Breakers" in the Index). See your dealer for service.

In an emergency, call the GMC Roadside Assistance Center. See "Roadside Assistance" in the Index.

New Vehicle "Break-In"

NOTICE:

Your vehicle doesn't need an elaborate "break-in." But it will perform better in the long run if you follow these guidelines:

- **Keep your speed at 55 mph (88 km/h) or less for the first 500 miles (805 km).**
- **Don't drive at any one speed -- fast or slow -- for the first 500 miles (805 km). Don't make full-throttle starts.**
- **Avoid making hard stops for the first 200 miles (322 km) or so. During this time your new brake linings aren't yet broken in. Hard stops with new linings can mean premature wear and earlier replacement. Follow this breaking-in guideline every time you get new brake linings.**
- **Don't tow a trailer during break-in. See "Towing a Trailer" in the Index for more information.**

Ignition Positions

You can use your key to turn your ignition switch to five different positions.

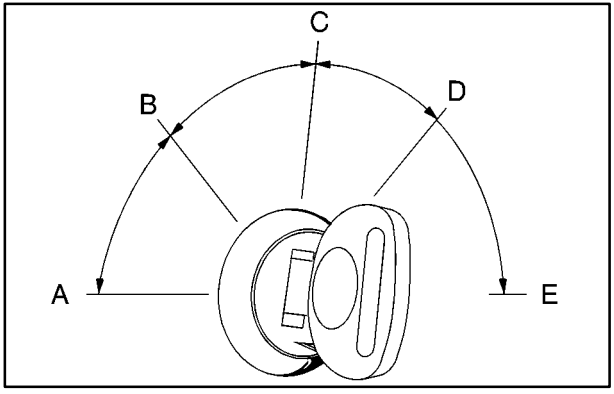

A (ACCESSORY): This position allows you to use things like the radio, power windows and the windshield wipers when the engine is off. Push in the key and turn it toward you.

B (LOCK): This position locks your ignition and transmission. It's a theft-deterrent feature. You will only be able to remove your key when the ignition is turned to LOCK.

NOTICE:

If your key seems stuck in LOCK and you can't turn it, be sure you are using the correct key; if so, is it all the way in? Turn the key only with your hand. Using a tool to force it could break the key or the ignition switch. If none of this works, then your vehicle needs service.

C (OFF): This position lets you turn off the engine. Use OFF if you must have your vehicle in motion while the engine is off (for example, if your vehicle is being pushed).

D (RUN): This is the position for driving.

E (START): This position starts your engine.

Retained Accessory Power (RAP)

Your vehicle is equipped with a Retained Accessory Power (RAP) feature which will allow certain features on your vehicle to continue to work for up to 20 minutes after the ignition key is turned to OFF. The RAP feature will also work with the key removed from the ignition.

Your radio, power windows and sunroof (if equipped) will work when the ignition key is in RUN or ACCESSORY. Once the key is turned from RUN to OFF, these features will continue to work for up to 20 minutes or until a door is opened.

Starting Your Engine

Move your shift lever to PARK (P) or NEUTRAL (N). Your engine won't start in any other position -- that's a safety feature. To restart when you're already moving, use NEUTRAL (N) only.

NOTICE:

Don't try to shift to PARK (P) if your vehicle is moving. If you do, you could damage the . Shift to PARK (P) only when your vehicle is stopped.

1. With your foot off the accelerator pedal, turn the ignition key to START. When the engine starts, let go of the key. The idle speed will go down as your engine gets warm.

NOTICE:

Holding your key in START for longer than 15 seconds at a time will cause your battery to be drained much sooner. And the excessive heat can damage your starter motor. Wait about 15 seconds between each try to help avoid draining your battery or damaging your starter.

2. If it doesn't start within 10 seconds, push the accelerator pedal all the way to the floor, while you hold the ignition key in START. When the engine starts, let go of the key and let up on the accelerator pedal. Wait about 15 seconds between each try.

When starting your engine in very cold weather (below 0°F or -18°C), do this:

1. With your foot off the accelerator pedal, turn the ignition key to START and hold it there up to 15 seconds. When the engine starts, let go of the key.
2. If your engine still won't start (or starts but then stops), it could be flooded with too much gasoline. Try pushing your accelerator pedal all the way to the floor and holding it there as you hold the key in START for about three seconds. When the engine starts, let go of the key and accelerator. If the vehicle starts briefly but then stops again, do the same thing, but this time keep the pedal down for five or six seconds. This clears the extra gasoline from the engine.

NOTICE:

Your engine is designed to work with the electronics in your vehicle. If you add electrical parts or accessories, you could change the way the engine operates. Before adding electrical equipment, check with your dealer. If you don't, your engine might not perform properly.

Engine Coolant Heater (If Equipped)

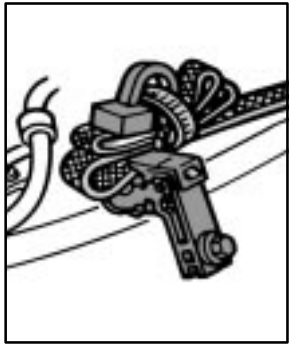

In very cold weather, 0°F (-18°C) or colder, the engine coolant heater can help. You'll get easier starting and better fuel economy during engine warm-up.

Usually, the coolant heater should be plugged in a minimum of four hours prior to starting your vehicle. At temperatures above 32°F (0°C), use of the coolant heater is not required.

To Use the Engine Coolant Heater

1. Turn off the engine.
2. Open the hood and unwrap the electrical cord. The cord is located on the driver's side of the engine compartment, near the power steering fluid reservoir.
3. Plug it into a normal, grounded 110-volt AC outlet.

⚠ CAUTION:

Plugging the cord into an ungrounded outlet could cause an electrical shock. Also, the wrong kind of extension cord could overheat and cause a fire. You could be seriously injured. Plug the cord into a properly grounded three-prong 110-volt AC outlet. If the cord won't reach, use a heavy-duty three-prong extension cord rated for at least 15 amps.

4. Before starting the engine, be sure to unplug and store the cord as it was before to keep it away from moving engine parts. If you don't, it could be damaged.

How long should you keep the coolant heater plugged in? The answer depends on the outside temperature, the kind of oil you have, and some other things. Instead of trying to list everything here, we ask that you contact your dealer in the area where you'll be parking your vehicle. The dealer can give you the best advice for that particular area.

Automatic Transmission Operation

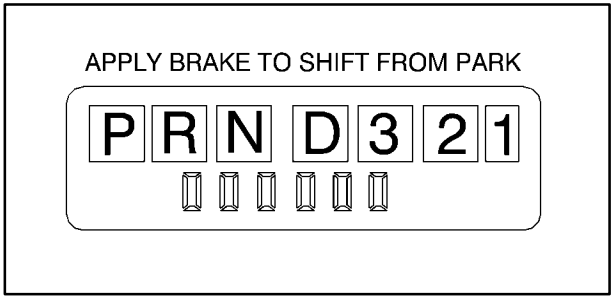

There are several different positions for your shift lever.

Your vehicle is equipped with an automatic transmission and features an electronic shift position indicator located within the instrument panel cluster. This display is powered anytime the shift lever is capable of being moved out of PARK (P). This means that if your key is in OFF, rather than LOCK, there will be a small current drain on your battery which could discharge your battery over a period of time. If you have to leave your key in the ignition in OFF for an extended period, it is recommended that you remove the IGN 0 fuse from the instrument panel fuse block. See “Fuses and Circuit Breakers” in the Index.

PARK (P): This position locks your rear wheels. It’s the best position to use when you start your engine because your vehicle can’t move easily.

⚠ CAUTION:

It is dangerous to get out of your vehicle if the shift lever is not fully in PARK (P) with the parking brake firmly set. Your vehicle can roll.

Don’t leave your vehicle when the engine is running unless you have to. If you have left the engine running, the vehicle can move suddenly. You or others could be injured. To be sure your vehicle won’t move, even when you’re on fairly level ground, always set your parking brake and move the shift lever to PARK (P).

See “Shifting Into PARK (P)” in the Index.

If you’re pulling a trailer, see “Towing a Trailer” in the Index.

REVERSE (R): Use this gear to back up.

NOTICE:

Shifting to REVERSE (R) while your vehicle is moving forward could damage your . Shift to REVERSE (R) only after your vehicle is stopped.

To rock your vehicle back and forth to get out of snow, ice or sand without damaging your transmission, see “Stuck: In Sand, Mud, Ice or Snow” in the Index.

NEUTRAL (N): In this position, your engine doesn’t connect with the wheels. To restart when you’re already moving, use NEUTRAL (N) only.

⚠ CAUTION:

Shifting out of PARK (P) or NEUTRAL (N) while your engine is “racing” (running at high speed) is dangerous. Unless your foot is firmly on the brake pedal, your vehicle could move very rapidly. You could lose control and hit people or objects. Don’t shift out of PARK (P) or NEUTRAL (N) while your engine is racing.

NOTICE:

Damage to your transmission caused by shifting out of PARK (P) or NEUTRAL (N) with the engine racing isn’t covered by your warranty.

DRIVE (D): This position is for normal driving. If you need more power for passing, and you're:

- Going less than about 35 mph (55 km/h), push your accelerator pedal about halfway down.
- Going about 35 mph (55 km/h) or more, push the accelerator all the way down.

You'll shift down to the next gear and have more power.

DRIVE (D) can be used when towing a trailer, carrying a heavy load, driving on steep hills or for off-road driving. You may want to shift the transmission to THIRD (3) or, if necessary, a lower gear selection if the transmission shifts too often.

THIRD (3): This position is also used for normal driving, however it offers more power and lower fuel economy than DRIVE (D).

SECOND (2): This position gives you more power but lower fuel economy. You can use SECOND (2) on hills. It can help control your speed as you go down steep mountain roads, but then you would also want to use your brakes off and on.

If you manually select SECOND (2), the transmission will drive in second gear. You may use this feature for reducing the speed of the rear wheels when you are trying to start your vehicle from a stop on slippery road surfaces. Once the vehicle is moving, shift into DRIVE (D).

FIRST (1): This position gives you even more power (but lower fuel economy) than SECOND (2). You can use it on very steep hills, or in deep snow or mud. If the shift lever is put in FIRST (1) while the vehicle is moving forward, the won't shift into first gear until the vehicle is going slowly enough.

NOTICE:

If your rear wheels can't rotate, don't try to drive. This might happen if you were stuck in very deep sand or mud or were up against a solid object. You could damage your transmission.

Also, if you stop when going uphill, don't hold your vehicle there with only the accelerator pedal. This could overheat and damage the transmission. Use your brakes or shift into PARK (P) to hold your vehicle in position on a hill.

On cold days, approximately 32°F (0°C) or colder, your transmission is designed to shift differently until the engine reaches normal operating temperature. This is intended to improve heater performance.

Tow/Haul Mode

Your vehicle is equipped with a tow/haul mode. The button is located on the end of the column shift lever. You can use this feature to assist when towing or hauling a heavy load. See “Tow/Haul Mode” in the Index for more information.

The tow/haul mode also interacts with the Autoride™ feature to enhance the ride when trailering or with a loaded vehicle. See “Autoride™” in the Index.

Parking Brake

To set the parking brake, hold the regular brake pedal down with your right foot. Push down the parking brake pedal with your left foot.

If the ignition is on, the brake system warning light will flash. A chime will activate when the parking brake is applied and the vehicle is moving at least 3 mph (5 km/h) for at least three seconds.

To release the parking brake, hold the regular brake pedal down. Pull the bottom edge of the lever, located above the parking brake pedal, marked BRAKE RELEASE, to release the parking brake.

If the ignition is on when the parking brake is released, the brake system warning light will go off.

NOTICE:

Driving with the parking brake on can cause your rear brakes to overheat. You may have to replace them, and you could also damage other parts of your vehicle.

If you are towing a trailer and are parking on any hill, see “Towing a Trailer” in the Index. That section shows what to do first to keep the trailer from moving.

Shifting Into PARK (P)

⚠ CAUTION:

It can be dangerous to get out of your vehicle if the shift lever is not fully in PARK (P) with the parking brake firmly set. Your vehicle can roll. If you have left the engine running, the vehicle can move suddenly. You or others could be injured. To be sure your vehicle won’t move, even when you’re on fairly level ground, use the steps that follow. If you’re pulling a trailer, see “Towing a Trailer” in the Index.

1. Hold the brake pedal down with your right foot and set the parking brake.
2. Move the shift lever into PARK (P) like this:

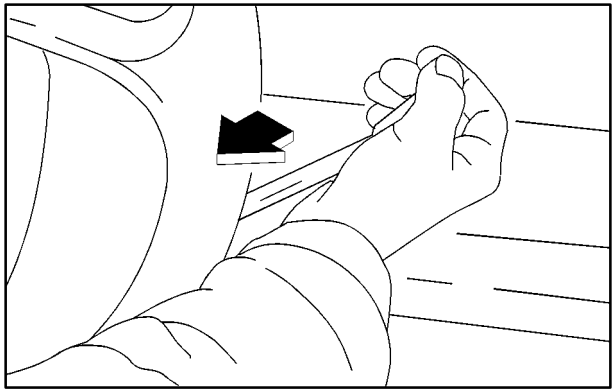

- Pull the shift lever toward you.

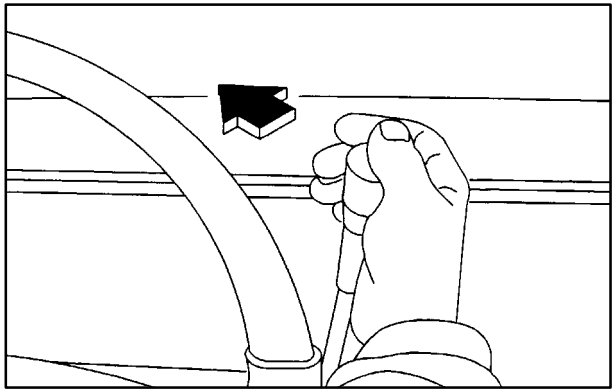

- Move the lever up as far as it will go.

3. Turn the ignition key to LOCK.
4. Remove the key and take it with you. If you can leave your vehicle with the ignition key in your hand, your vehicle is in PARK (P).

Leaving Your Vehicle With the Engine Running

⚠ CAUTION:

It can be dangerous to leave your vehicle with the engine running. Your vehicle could move suddenly if the shift lever is not fully in PARK (P) with the parking brake firmly set. And, if you leave the vehicle with the engine running, it could overheat and even catch fire. You or others could be injured. Don't leave your vehicle with the engine running unless you have to.

If you have to leave your vehicle with the engine running, be sure your vehicle is in PARK (P) and the parking brake is firmly set before you leave it. After you move the shift lever into PARK (P), hold the regular brake pedal down. Then, see if you can move the shift lever away from PARK (P) without first pulling it toward you. If you can, it means that the shift lever wasn't fully locked into PARK (P).

Torque Lock

If you are parking on a hill and you don't shift your into PARK (P) properly, the weight of the vehicle may put too much force on the parking pawl in the transmission. You may find it difficult to pull the shift lever out of PARK (P). This is called "torque lock." To prevent torque lock, set the parking brake and then shift into PARK (P) properly before you leave the driver's seat. To find out how, see "Shifting Into PARK (P)" in the Index.

When you are ready to drive, move the shift lever out of PARK (P) *before* you release the parking brake.

If torque lock does occur, you may need to have another vehicle push yours a little uphill to take some of the pressure from the parking pawl in the transmission, so you can pull the shift lever out of PARK (P).

Shifting Out of PARK (P)

Your vehicle has an automatic transmission shift lock control system. You have to fully apply your regular brakes before you can shift from PARK (P) when the ignition is in RUN. See “Automatic Transmission” in the Index.

If you cannot shift out of PARK (P), ease pressure on the shift lever and push the shift lever all the way up into PARK (P) as you maintain brake application. Then, move the shift lever into the gear you want.

If you ever hold the brake pedal down but still can’t shift out of PARK (P), try this:

1. Turn the key to OFF.
2. Apply and hold the brake until the end of Step 4.
3. Shift the vehicle to NEUTRAL (N).
4. Start the vehicle and then shift to the drive gear you want.
5. Have the system fixed as soon as you can.

Parking Over Things That Burn

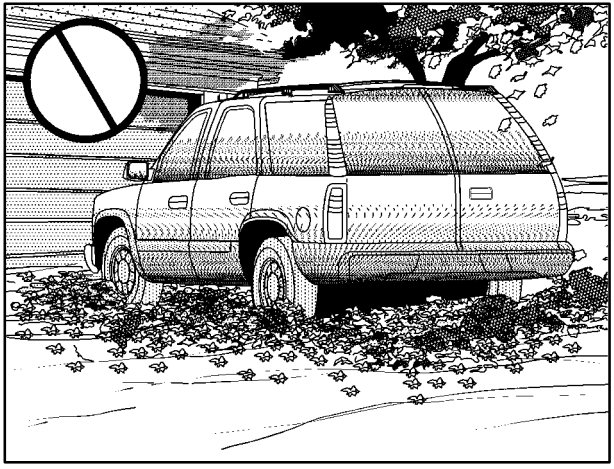

⚠ CAUTION:

Things that can burn could touch hot exhaust parts under your vehicle and ignite. Don’t park over papers, leaves, dry grass or other things that can burn.

Engine Exhaust

⚠ CAUTION:

Engine exhaust can kill. It contains the gas carbon monoxide (CO), which you can't see or smell. It can cause unconsciousness and death.

You might have exhaust coming in if:

- **Your exhaust system sounds strange or different.**
- **Your vehicle gets rusty underneath.**
- **Your vehicle was damaged in a collision.**
- **Your vehicle was damaged when driving over high points on the road or over road debris.**
- **Repairs weren't done correctly.**
- **Your vehicle or exhaust system had been modified improperly.**

If you ever suspect exhaust is coming into your vehicle:

- **Drive it only with all the windows down to blow out any CO; and**
- **Have your vehicle fixed immediately.**

Running Your Engine While You're Parked

It's better not to park with the engine running. But if you ever have to, here are some things to know.

⚠ CAUTION:

Idling the engine with the climate control system off could allow dangerous exhaust into your vehicle. See the earlier Caution under "Engine Exhaust."

Also, idling in a closed-in place can let deadly carbon monoxide (CO) into your vehicle even if the fan is at the highest setting. One place this can happen is a garage. Exhaust -- with CO -- can come in easily. NEVER park in a garage with the engine running.

Another closed-in place can be a blizzard. See "Blizzard" in the Index.

⚠ CAUTION:

It can be dangerous to get out of your vehicle if the shift lever is not fully in PARK (P) with the parking brake firmly set. Your vehicle can roll. Don't leave your vehicle when the engine is running unless you have to. If you've left the engine running, the vehicle can move suddenly. You or others could be injured. To be sure your vehicle won't move, even when you're on fairly level ground, always set your parking brake and move the shift lever to PARK (P).

Follow the proper steps to be sure your vehicle won't move. See "Shifting Into PARK (P)" in the Index.

If you're pulling a trailer, see "Towing a Trailer" in the Index.

Autoride™

The Autoride™ feature provides superior vehicle ride and handling under a variety of passenger and loading conditions.

The system is fully automatic and uses a computer controller to continuously monitor vehicle speed, wheel to body position, lift/dive and steering position of the vehicle. The controller then sends signals to each shock absorber to independently adjust the damping level to provide the optimum vehicle ride.

Autoride also interacts with the tow/haul mode that, when activated, will provide additional control of the shock absorbers. This additional control results in better ride and handling characteristics when the vehicle is loaded or towing a trailer. See "Tow/Haul Mode" in the Index for more information.

Locking Rear Axle

Your locking rear axle can give you additional traction on snow, mud, ice, sand or gravel. It works like a standard axle most of the time, but when one of the rear wheels has no traction and the other does, this feature will allow the wheel with traction to move the vehicle.

All-Wheel Drive

With this feature, engine power is sent to all four wheels when extra traction is needed.

This is like four-wheel drive, but there is no separate lever or switch to engage or disengage the front axle. It is fully automatic, and adjusts itself as needed for road conditions.

Horn

To sound the horn, press the center pad on the steering wheel.

Tilt Wheel

The tilt steering wheel allows you to adjust the steering wheel before you drive. You can raise it to the highest level to give your legs more room when you enter and exit the vehicle.

The tilt lever is located on the driver's side of the steering column under the turn signal lever.

To tilt the wheel, hold the steering wheel and pull the lever. Move the steering wheel to a comfortable level, then release the lever to lock the wheel in place.

Turn Signal/Multifunction Lever

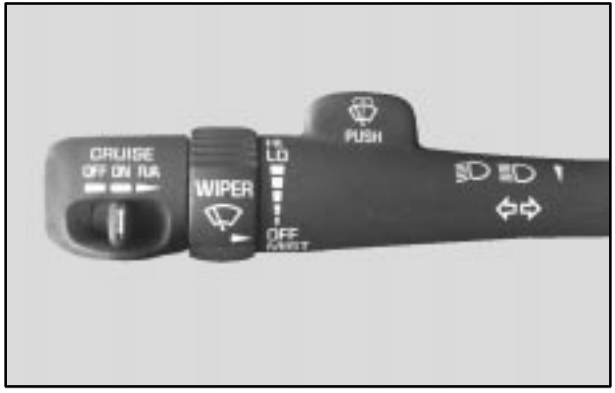

The lever on the left side of the steering column includes the following:

- Turn and Lane Change Signals
- Headlamp High/Low-Beam Changer
- Flash-to-Pass feature
- Windshield Wipers
- Windshield Washer
- Cruise Control

Turn and Lane Change Signals

The turn signal has two upward (for right) and two downward (for left) positions. These positions allow you to signal a turn or a lane change.

To signal a turn, move the lever all the way up or down. When the turn is finished, the lever will return automatically.

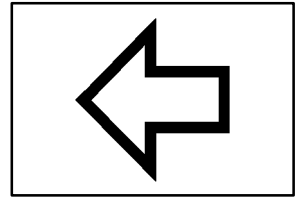

An arrow on the instrument panel cluster will flash in the direction of the turn or lane change.

To signal a lane change, just raise or lower the lever until the arrow starts to flash. Hold it there until you complete your lane change. The lever will return by itself when you release it.

If you move the lever all the way up or down, and the arrow flashes at twice the normal rate, a signal bulb may be burned out and other drivers may not see your turn signal.

If a bulb is burned out, replace it to help avoid an accident. If the arrows don't go on at all when you signal a turn, check for burned-out bulbs and a blown fuse (see "Fuses and Circuit Breakers" in the Index).

Turn Signal On Chime

If your turn signal is left on for more than 3/4 of a mile (1.2 km), a chime will sound at each flash of the turn signal. To turn off the chime, move the turn signal lever to off.

Headlamp High/Low-Beam Changer

To change the headlamps from low to high beam or high to low beam, pull the multifunction lever all the way toward you. Then release it.

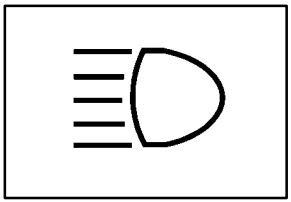

When the high beams are on, this light on the instrument panel cluster also will be on.

Flash-to-Pass Feature

This feature allows you to use your high-beam headlamps to signal a driver in front of you that you want to pass. It works even if your headlamps are off.

To use it, pull the turn signal lever toward you, but not so far that you hear it click.

If your headlamps are off or on low beam, your high-beam headlamps will turn on. They'll stay on as long as you hold the lever toward you and the high-beam indicator on the instrument panel will come on. Release the lever to turn the high-beam headlamps off.

Windshield Wipers

You control the windshield wipers by turning the band with the wiper symbol on it.

For a single wiping cycle, turn the band to MIST. Hold it there until the wipers start, then let go. The wipers will stop after one wipe. If you want more wipes, hold the band on MIST longer.

You can set the wiper speed for a long or short delay between wipes. This can be very useful in light rain or snow. Turn the band to choose the delay time. The closer to LO, the shorter the delay.

For steady wiping at low speed, turn the band away from you to the LO position. For high-speed wiping, turn the band further, to HI. To stop the wipers, move the band to OFF.

Be sure to clear ice and snow from the wiper blades before using them. If they're frozen to the windshield, carefully loosen or thaw them. If your blades do become worn or damaged, get new blades or blade inserts.

Windshield Washer

(Washer Fluid): There is a paddle marked with the windshield washer symbol at the top of the multifunction lever. To spray washer fluid on the windshield, push the paddle. The wipers will clear the window and then either stop or return to your preset speed.

⚠ CAUTION:

In freezing weather, don't use your washer until the windshield is warmed. Otherwise the washer fluid can form ice on the windshield, blocking your vision.

Rear Window Washer/Wiper

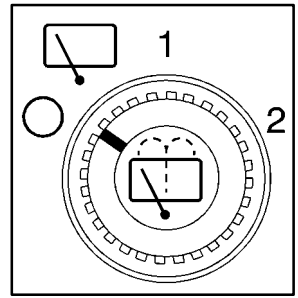

This knob is located on the instrument panel.

To turn the rear wiper on, turn the knob to either 1 or 2. For long delayed wiping, turn the knob to 1. For short delayed wiping, turn the knob to 2.

(Off): To turn the wiper off, turn the knob to this symbol.

(Washer Fluid): To wash the window, press the knob with this symbol.

The rear window washer uses the same fluid bottle as the windshield washer. However, the rear window washer will run out of fluid before the windshield washer. If you can wash your windshield but not your rear windows, check the fluid level.

For more information, see "Low Washer Fluid" in the Index.

Cruise Control

With cruise control, you can maintain a speed of about 25 mph (40 km/h) or more without keeping your foot on the accelerator. This can really help on long trips. Cruise control does not work at speeds below about 25 mph (40 km/h).

If you apply your brakes, the cruise control will disengage.

⚠ CAUTION:

- **Cruise control can be dangerous where you can't drive safely at a steady speed. So, don't use your cruise control on winding roads or in heavy traffic.**
- **Cruise control can be dangerous on slippery roads. On such roads, fast changes in tire traction can cause needless wheel spinning, and you could lose control. Don't use cruise control on slippery roads.**

Setting Cruise Control

⚠ CAUTION:

If you leave your cruise control switch on when you're not using cruise, you might hit a button and go into cruise when you don't want to. You could be startled and even lose control. Keep the cruise control switch off until you want to use cruise control.

1. Move the cruise control switch to ON.
2. Get up to the speed you want.
3. Press in the SET button at the end of the lever and release it.
4. Take your foot off the accelerator pedal.

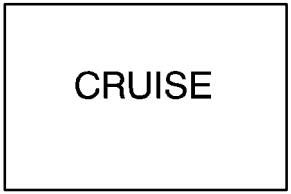

United States

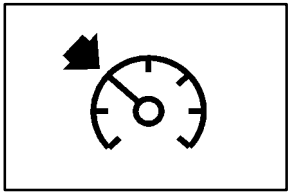

Canada

The CRUISE light on the instrument panel will illuminate when the cruise control is engaged.

Resuming a Set Speed

Suppose you set your cruise control at a desired speed and then you apply the brake. This, of course, disengages the cruise control. But you don't need to reset it.

Once you're going about 25 mph (40 km/h) or more, you can move the cruise control switch from ON to R/A (Resume/Accelerate) briefly.

You'll go right back up to your chosen speed and stay there.

If you continue to hold the switch at R/A, the vehicle will keep going faster until you release the switch or apply the brake. So unless you want to go faster, don't hold the switch at R/A.

Increasing Speed While Using Cruise Control

There are two ways to go to a higher speed:

- Use the accelerator pedal to get to the higher speed. Press the SET button at the end of the lever, then release the button and the accelerator pedal. You'll now cruise at the higher speed.
- Move the cruise switch from ON to R/A. Hold it there until you get up to the speed you want, and then release the switch. To increase your speed in very small amounts, move the switch to R/A briefly. Each time you do this, your vehicle will go about 1 mph (1.6 km/h) faster.

Reducing Speed While Using Cruise Control

- Press and hold the SET button at the end of the lever until you reach the lower speed you want, then release it.
- To slow down in very small amounts, press the SET button briefly. Each time you do this, you'll go about 1 mph (1.6 km/h) slower.

Passing Another Vehicle While Using Cruise Control

Use the accelerator pedal to increase your speed. When you take your foot off the pedal, your vehicle will slow down to the cruise control speed you set earlier.

Using Cruise Control on Hills

How well your cruise control will work on hills depends upon your speed, load and the steepness of the hills. When going up steep hills, you may want to step on the accelerator pedal to maintain your speed. When going downhill, you may have to brake or shift to a lower gear to keep your speed down. Of course, applying the brake takes you out of cruise control. Many drivers find this to be too much trouble and don't use cruise control on steep hills.

Ending Cruise Control

There are two ways to turn off the cruise control:

- Step lightly on the brake pedal.
- Move the cruise control switch to OFF.

Erasing Speed Memory

When you turn off the cruise control or the ignition, your cruise control set speed memory is erased.

Exterior Lamps

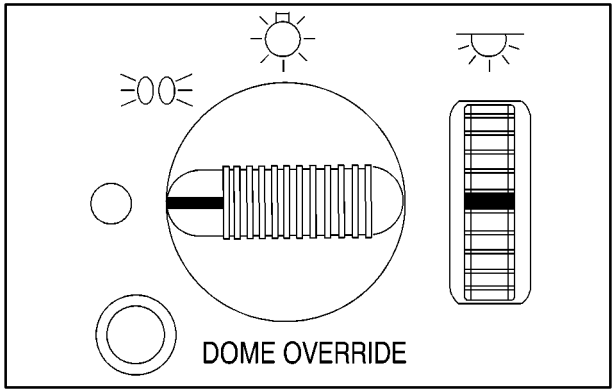

The exterior lamp control is located on the driver's side of the instrument panel.

The exterior lamp control has three positions:

(Off): Turn the control to this symbol to turn off your lamps and put the system into automatic headlamp mode.

(Parking Lamps): Turn the control to the parking lamps symbol to manually turn on the following:

- Parking Lamps
- Sidemarker Lamps
- Taillamps
- License Plate Lamps
- Instrument Panel Lights

(Headlamps): Turn the control to the master lamps symbol to turn on all the lamps listed as well as the headlamps.

You can switch your headlamps from high to low beam by pulling the turn signal/multifunction lever toward you.

Automatic Headlamp System

When it is dark enough outside, your automatic headlamp system will turn on your headlamps at the normal brightness along with other lamps such as the taillamps, sidemarker, parking lamps and the instrument panel lights. The radio lights will also dim.

Your vehicle is equipped with a headlamp off delay, which will keep the headlamps on for a short time after the ignition is turned to OFF. For more information see “Secondary Information Center (SIC)” in the Index.

Your vehicle has a light sensor located on the top of the instrument panel in the defroster grille. Be sure it is not covered, or the system will be on whenever the ignition is on.

The system may also turn on your headlamps when driving through a parking garage, heavy overcast weather or a tunnel. This is normal.

There is a delay in the transition between the daytime and nighttime operation of the Daytime Running Lamps (DRL) and the automatic headlamp systems so that driving under bridges or bright overhead street lights does not affect the system. The DRL and automatic headlamp system will only be affected when the light sensor sees a change in lighting lasting longer than the delay.

To idle your vehicle with the automatic headlamp system off, set the parking brake while the ignition is off. Then start your vehicle. The automatic headlamp system will stay off until you release the parking brake.

As with any vehicle, you should turn on the regular headlamps when you need them.

You may be able to turn off your automatic headlamp system. See “Daytime Running Lamps (DRL)” later in this section for more information.

Lamps On Reminder

A reminder chime will sound when your headlamps or parking lamps are manually turned on and your ignition is in OFF, LOCK or ACCESSORY. To disable the chime, turn the thumbwheel all the way down. In the automatic mode, the headlamps turn off once the ignition key is in OFF.

Puddle Lamps

Your vehicle is equipped with puddle lamps to help you see the area near the base of the front doors when it is dark out. The puddle lamps will illuminate when a door is opened or when you press the UNLOCK button on the keyless entry transmitter. The lamps will time out or turn off once the engine is started.

You can program the puddle lamps not to come on if you choose. See “Secondary Information Center” in the Index for more information.

Daytime Running Lamps

Daytime Running Lamps (DRL) can make it easier for others to see the front of your vehicle during the day. DRL can be helpful in many different driving conditions, but they can be especially helpful in the short periods after dawn and before sunset. Fully functional daytime running lamps are required on all vehicles first sold in Canada.

The DRL system will come on when:

- The ignition is on,
- the exterior lamps control is off,
- the automatic transmission is not in PARK (P),
- the light sensor determines it is daytime and
- the parking brake is released.

When the DRL are on, only your DRL lamps will be on. The taillamps, sidemarker and other lamps won’t be on. The instrument panel won’t be lit up either.

When it begins to get dark, the automatic headlamp system will switch from DRL to the headlamps or the last chosen headlamp setting that was used.

When you turn the exterior lamps control to the off position, the headlamps will go off, and your DRL lamps will illuminate, provided it is not dark outside.

To idle your vehicle with the DRL off, set the parking brake. Shifting the transmission into PARK (P) will also allow you to idle the vehicle with the DRL off. The DRL will stay off until you release the parking brake or shift the transmission out of PARK (P).

This procedure applies only to vehicles first sold in the United States.

When necessary, you may turn off the automatic headlamp system and the Daytime Running Lamps (DRL) feature by following these steps:

1. Turn the ignition to RUN.
2. Press the DOME OVERRIDE button four times within six seconds. After the fourth press of the button, a chime will sound informing you the system is off.
3. The system will revert back to the automatic mode when the DOME OVERRIDE button is again pushed four times within six seconds (a chime will sound), or when the ignition is turned off and on again.

When the system is turned off, the headlamps will not automatically come on when it becomes dark outside.

As with any vehicle, you should turn on the regular headlamp system when you need it.

Fog Lamps

Use the fog lamps for better vision in foggy or misty conditions. Your parking lamps and/or low-beam headlamps must be on for your fog lamps to work.

The fog lamp button is located on the left side of the instrument panel.

Press the button to turn the fog lamps on while the headlamps are on. Press the button again to turn them off. An indicator light will glow near the button when the fog lamps are on.

Remember, fog lamps alone will not give off as much light as your headlamps. Never use your fog lamps in the dark without turning on your headlamps.

The fog lamps will go off whenever your high-beam headlamps come on. When the high beams go off, the fog lamps will come on again.

The fog lamps will be cancelled after the ignition is turned off. If you still want to use the fog lamps after you restart the vehicle, you will need to press the fog lamp button again.

Interior Lamps

Instrument Panel Intensity Control

The instrument panel intensity control is located to the right of the exterior lamps control.

Turn the thumbwheel up to adjust the instrument panel lights. To turn on the dome lamps (with the vehicle's doors closed) turn the thumbwheel all the way up.

Exit Lighting

With exit lighting, the interior lamps will come on when you remove the key from the ignition. The lamps will not come on if the DOME OVERRIDE button is pressed in.

Illuminated Entry

Your vehicle is equipped with an illuminated entry feature.

When a door is opened, the dome lamps and puddle lamps will come on if the DOME OVERRIDE button is in the "out" position. If the DOME OVERRIDE button is pressed in, the lamps will not come on.

Front Reading Lamps (If Equipped)

If your vehicle has reading lamps, press the button located next to the lamp to turn them on. The lamps can be adjusted to point in the direction you want.

Press the button again to turn the lamp off.

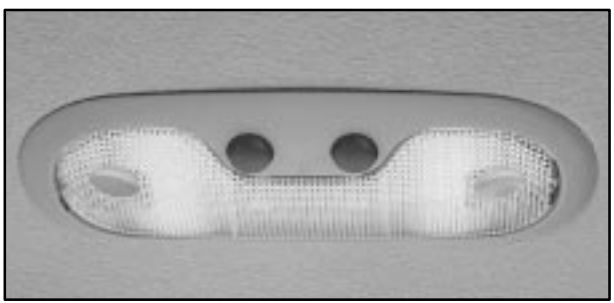

Your vehicle may also have reading lamps in other locations. To turn on or off, press the button located next to the lamp. The lamps are fixed and cannot be adjusted.

Dome Lamps

The dome lamps will come on when you open a door and will slowly dim to off when all doors are closed.

You can also turn the dome lamps on by turning the thumbwheel, located next to the exterior lamp control, all the way up. In this position, the dome lamps will remain on whether a door is opened or closed.

You can use the DOME OVERRIDE button, located below the exterior lamp control, to set the dome lamps to come on automatically when a door is opened, or remain off. To turn the lamps off, press the button into the in position. With the button in this position, the dome lamps will remain off when the doors are open. To return the lamps to automatic operation, press the button again and return it to the out position. With the button in this position, the dome lamps will come on when you open a door.

Battery Run-Down Protection

This feature shuts off the dome, reading, glove box and underhood lamps if they are left on for more than 20 minutes when the ignition is off. This will keep your battery from running down.

Mirrors

Electrochromic Inside Rearview Mirror with Compass and Temperature Display

When on, an electrochromic mirror automatically dims to the proper level to minimize glare from lights behind you after dark.

The electrochromic mirror will always revert to on when the vehicle is started.

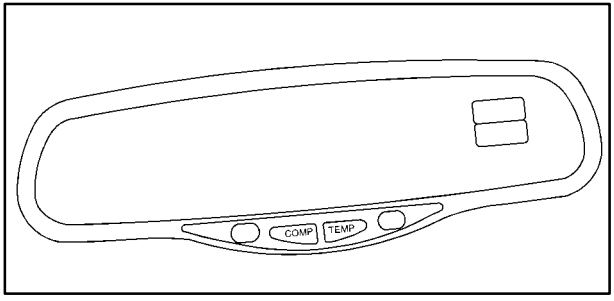

The mirror also includes a display of both the compass and the temperature in the upper right corner of the mirror face. The dual display can be turned on or off by briefly pressing either the TEMP or COMP button.

Temperature Display

Pressing the TEMP button once briefly will toggle the compass/temperature reading on and off. To alternate the temperature reading between Fahrenheit and Celsius, press and hold the TEMP button for three seconds until the display blinks F° and C°. Press and release the TEMP button to toggle between the Fahrenheit and Celsius readings. After five seconds of inactivity, the display will stop flashing and stay at the last setting.

If an abnormal reading is displayed, please consult your dealer.

Electrochromic Mirror Operation

Each time the vehicle is started, the electrochromic mirror is activated. If you do not want it on, then you will have to manually turn it off. The time period you need to press and hold the TEMP button to turn the electrochromic feature on or off is six seconds. The indicator light to the right of the TEMP button will turn on or off to show you when the electrochromic feature is activated.

Compass Operation

With the ignition on, the compass will show two character boxes. The mirror will display the compass heading.

When cleaning the mirror, use a paper towel or similar material dampened with glass cleaner. Do not spray glass cleaner directly on the mirror as that may cause the liquid cleaner to enter the mirror housing.

Compass Calibration

The compass may need calibration if:

- After five seconds, the display does not show a compass heading (N for North, for example), there may be a strong magnetic field interfering with the compass. Such interference may be caused by a magnetic antenna mount, magnetic note pad holder or a similar magnetic item.
- The compass does not display the correct heading and the compass zone variance is set correctly.

In order to calibrate, the letters CAL must be displayed in the mirror compass windows. If CAL is not displayed, push in the COMP button for approximately eight seconds or until the letters CAL are displayed.

The compass can be calibrated in one of two ways:

- Drive the vehicle in circles at 5 mph (8 km/h) or less until the display reads a direction, or
- drive the vehicle on your everyday routine and after several turns the compass will become calibrated and will display a direction.

Compass Variance

The mirror is set in zone eight upon leaving the factory. It will be necessary to adjust the compass to compensate for compass variance if you live outside zone eight. Under certain circumstances, as during a long distance cross-country trip, it will be necessary to adjust for compass variance. Compass variance is the difference between earth's magnetic north and true geographic north. If not adjusted to account for compass variance, your compass could give false readings.

To adjust for compass variance, do the following:

1. Press and hold the COMP button located at the bottom of the mirror for three seconds until a zone number appears in the display.
2. Find your current location and variance zone number on the following zone map.

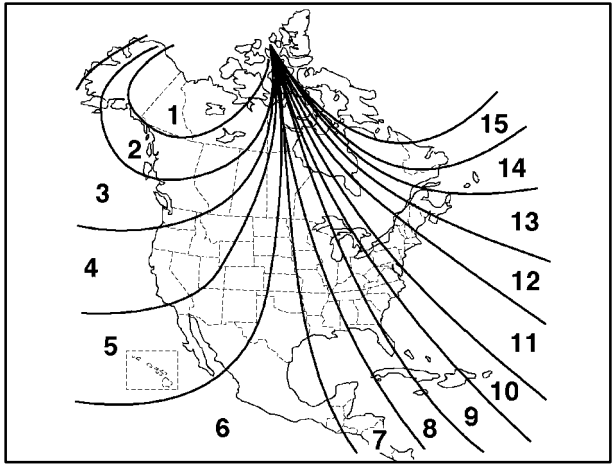

3. Press the COMP button on the bottom of the mirror until the new zone number appears in the display. After you stop pressing the button in, the display will show a compass direction within a few seconds.

Power Outside Rearview Mirrors

The control is located on the driver's door armrest.

Move the upper selector switch to the left or right to choose the mirror you want to adjust, then press the arrows located on the lower control pad to adjust the mirror.

The mirrors include ground illumination lamps (puddle lamps) in the base of the mirror. For more information on these lamps, see "Puddle Lamps" in the Index.

Driver's Outside Auto-Dimming Rearview Mirror

The driver's outside mirror will adjust for the glare of headlamps behind you. This feature is controlled by the on and off settings on the electrochromic mirror. See "Electrochromic Inside Rearview Mirror with Compass and Temperature Display" earlier in this section.

Convex Outside Mirror

Your passenger's side mirror is convex. A convex mirror's surface is curved so you can see more from the driver's seat.

⚠ CAUTION:

A convex mirror can make things (like other vehicles) look farther away than they really are. If you cut too sharply into the right lane, you could hit a vehicle on your right. Check your inside mirror or glance over your shoulder before changing lanes.

Heated Outside Rearview Mirrors

The outside rearview mirrors have a defrost mode.

To turn on the defrost feature, press the rear window defogger button. See "Rear Window Defogger" in the Index for further information.

Storage Compartments

Glove Box

To open your glove box, lift up the latch and pull the door open.

Center Console Storage Area

Your vehicle has a console compartment between the bucket seats.

If the console is locked, insert the console key into the lock and unlock it. Press the button on the side and swing the console lid open.

The console has a place to store compact discs and loose change. The console is also equipped with an accessory power outlet. See “Accessory Power Outlets” later in this section for more information.

To access the cell phone storage area, press the button on the front of the console and an access lid will pop up. To store a cell phone, place it inside the net on the inside of the access lid.

Center Console Storage Area Access Door

If you ever drop something between the cupholder door and the center console area you can easily remove it by following these steps:

1. Open the center console storage area by pressing the button on the side of the console lid.
2. Locate the access door inside the storage area toward the front.
3. Press the release button on the access door and pull it out. You should now be able to retrieve the lost item(s).

Reverse the procedure to reinstall the access door.

Rear Storage Compartment

Your vehicle has a storage compartment located in the rear cargo area of the vehicle in the driver's side trim panel.

To open the Yukon Denali compartment, press in on the release latch and swing the compartment door open.

To open the Yukon XL Denali compartment, pull the latch to access the compartment.

Cupholders

Your vehicle is equipped with cupholders for the front and rear passengers located in the center console and on the rear of the center console storage area. To use the front cupholders press down on the raised area of the access door. To access the rear cupholders, pull down on the door located on the back of the console.

Cargo Security Shade

⚠ CAUTION:

An improperly stored cargo cover could be thrown about the vehicle during a collision or sudden maneuver. You or others could be injured. If you remove the cover, always store it outside of the vehicle. When you put it back, always be sure that it is securely reattached.

If you have a cargo security shade, you can use it to cover items in the cargo area of your vehicle.

To use the shade, do the following:

1. Pull the shade handle toward the rear of the vehicle.
2. Latch the shade posts into the retaining sockets on the cargo area trim panels.

To return the shade to the retracted position, do the following:

1. Pull up on the shade handle to release the shade posts from the retaining sockets.
2. Let the shade move forward to the full retracted position.

To remove the shade from the vehicle, do the following:

1. Let the shade go all the way into the holder.
2. Then, grasping the passenger's side shade endcap, push the shade endcap toward the driver's side of the vehicle. The endcap should lock in the compressed position.
3. Lift the shade up on the passenger's side, swing the shade rearward and take it out of the vehicle.

To put the shade in the vehicle, do the following:

1. Make sure the shade slot in the holder faces rearward with the round surface facing down.
2. Then, hold the shade at an angle and place the shade holder tab into the slot in the driver's side trim panel.
3. Move the other end of the shade forward and hold it next to the passenger's side trim panel slot.
4. Push the button on top of the passenger's side endcap. This will allow the shade to extend into the trim slot.
5. Lightly pull on the shade holder to make sure it is secure. On Yukon XL Denali models there are two slots. The slots furthest forward allow the shade to be used if the third seat is removed or folded down.

Cargo Tie Downs

There are cargo tie downs in the rear cargo area that allow you to strap cargo in and keep it from moving inside the vehicle.

When not using the tie downs, flip them down out of the way.

Convenience Net

The convenience net in the rear of your vehicle helps to keep small loads, like grocery bags, in place during sharp turns or quick stops and starts.

The net is not designed for larger, heavier items.

To install the net, attach the hooks to the raised cargo tie downs. Then, attach the cord loops to the button retainers in the side trim.

You can unhook the net so that it will lie flat when you're not using it.

Luggage Carrier

You can load things on top of your vehicle with this feature.

The luggage carrier has slats and siderails attached to the roof and crossrails which can be moved back and forth to help secure cargo. Tie the load to the siderails or siderail supports.

NOTICE:

Loading cargo that weighs more than 200 lbs. (90.6 kg) on the luggage carrier may damage your vehicle. When you carry large things, never let them hang over the rear or the sides of your vehicle. Load your cargo so that it rests on the slats and does not scratch or damage the vehicle. Put the cargo against the siderails and fasten it securely to the luggage carrier.

Don't exceed the maximum vehicle capacity when loading your vehicle. For more information on vehicle capacity and loading, see "Loading Your Vehicle" in the Index.

To prevent damage or loss of cargo as you're leaving, check now and then to make sure the luggage and cargo are still securely fastened.

Be sure the cargo is properly loaded.

- If small heavy objects are placed on the roof, place the load in the area over the rear wheels (behind the rear side door on Yukon XL Denali models). If you need to, cut a piece of 3/8 inch plywood to fit inside the crossrails and siderails to spread the load. If plywood is used, tie it to the siderail supports.
- Tie the load to the crossrails or the siderail supports. Use the crossrails only to keep the load from sliding. To move the crossrails, pull out on the latch release handle at each end. Slide the crossrail to the desired position balancing the force side to side. Push the release handle back into the latched position and slide the crossrail back and forth slightly to be sure the latch snaps securely into place.
- If you need to carry long items, move the crossrails as far apart as they will go. Tie the load to the crossrails and the siderails or siderail supports. Also tie the load to the bumpers. Do not tie the load so tightly that the crossrails or siderails are damaged.
- For the purpose of wind noise reduction, locate the front crossrail approximately 18 to 24 inches (46 cm to 58 cm) rearward of the front supports.
- After moving a crossrail, be sure it is securely locked into the siderail.

Your vehicle has a Center High-Mounted Stoplamp (CHMSL) located above the rear glass.

If items are loaded on the roof of the vehicle, care should be taken not to block or damage the CHMSL unit.

Ashtrays and Cigarette Lighter

The front ashtray is located in the center console. Press the raised area on the access door to use the ashtray.

NOTICE:

If you store paper or other things that burn in your ashtrays, they could be set on fire by cigarettes or other smoking materials. That could cause a fire and possibly damage your vehicle. Do not store papers and other things that burn in your ashtrays.

To remove the ashtray first locate the indent on the right side of the ashtray. Then, place the tip of your finger in the indent and pry the ashtray out.

To use the cigarette lighter, push it in all the way, and let go. When it's ready, it will pop back out by itself.

NOTICE:

Holding a cigarette lighter in with your hand while it's heating can make it overload, damaging the lighter and the heating element. Just push the lighter all the way in and let go. When it's done, it will pop back out by itself.

Sun Visors

To block out glare, you can swing down the visors. You can also swing them out to help block glare at the front and side windows.

Illuminated Visor Vanity Mirrors

Pull the sunvisor down and lift the mirror cover to turn on the lamps. There is a switch to adjust the intensity of the lamps.

Accessory Power Outlets

With accessory power outlets you can power auxiliary electrical equipment such as a cellular telephone or CB radio.

Your vehicle is equipped with many accessory power outlets. The front outlet is located next to the Secondary Information Center. Lift up on the door to access the outlet.

There is also an outlet located in the center console. Press the button on the side of the console door to access the outlet. See the section on “Center Console Storage Area” earlier for more information. There are also two accessory power outlets located on the back of the center console. Lift up on the doors to access the outlets.

Power outlets are also located in the rear cargo area on the passenger side.

The cigarette lighter is designed to fit only in the receptacle to the right of the accessory power outlets.

NOTICE:

Adding some electrical equipment to your vehicle can damage it or keep other things from working as they should. This wouldn’t be covered by your warranty. Check with your dealer before adding anything that exceeds the amperage rating.

Certain power accessory plugs may not be compatible to the accessory power outlets and could result in blown vehicle or adapter fuses. If you experience a problem, see your dealer for additional information on the accessory power plugs.

NOTICE:

Power outlets are designed for accessory plugs only. Do not hang any type of accessory or accessory bracket from the plug. Improper use of the power outlet can cause damage not covered by your warranty.

OnStar® System (If Equipped)

OnStar is a vehicle communications system that offers a variety of services and provides a one-touch hands-free communication link between you and the OnStar Center. To receive OnStar services, a service subscription agreement is required and an additional fee may be required. Services are available 24 hours a day, 7 days a week. For more information, call 1-888-ONSTAR-7 (1-888-667-8277).

OnStar Services Button: Press this button once to contact an advisor who will be able to assist you with these services. If you are not quickly connected, the system will automatically reset and redial. This ensures connection to the center; there is no additional action required. Press the Communication button to cancel the automatic redial.

Emergency Button: In an emergency situation, press the emergency service button. Upon receiving the call, an advisor at the center will locate your vehicle and assess the situation. If necessary, the advisor will alert the nearest emergency service provider.

Communication Button: Press this button at the end of a call. Also press this button to answer a call from the center, or cancel a call if one of the other buttons is accidentally pressed. This button is also used to access OnStar Personal Calling and Virtual Advisor services. See the OnStar owner package for more information.

Volume Control: You can control the volume of the OnStar System using either the volume knob on the radio or using the steering wheel controls, if equipped.

Telltale Light: This light will indicate the status of the system. A solid green light will come on when you start the vehicle to let you know that the system is on and is ready to make or receive calls.

If the light blinks green it means that an incoming or outgoing call is in progress. Press the Communication button if you notice the light blinking and you are not on a call.

The light will be red in the event of an OnStar system malfunction. If this occurs press the OnStar Services button to attempt to contact an advisor. If the connection is made, the advisor will assist you with steps to take to make sure that the system is functioning properly. If you cannot contact the advisor, take your vehicle to your dealership as soon as possible for assistance.

Cellular Antenna: The cellular antenna on the outside of your vehicle is critical to effective communications using the OnStar system. Optimum cellular reception can be obtained when the mast is straight up and down.

OnStar Services

The following services are available within OnStar service plans. Your vehicle comes with a specific one-year service plan that allows use of some or all of the following services.

- **Automatic Notification of Air Bag Deployment:** If an air bag deploys, a priority emergency signal is sent automatically to the center. An advisor will locate your vehicle's position, try to contact you and assist you in the situation. If the center is unable to contact you, an emergency service provider will be contacted.
- **Stolen Vehicle Tracking:** Call the center at 1-888-4-ONSTAR (1-888-466-7827) to report your vehicle stolen. The system can then attempt to locate and track your vehicle and the advisor will assist the proper authorities.
- **Roadside Assistance with Location:** For vehicle breakdowns, press the OnStar Services button. An advisor will contact the appropriate help.
- **Remote Diagnostics:** If an instrument panel light comes on, press the OnStar Services button. An advisor can perform a check of the engine on-board computer, and recommend what action needs to be taken.

- **OnStar MED-NET:** Med-Net can store your personal medical history and provide it to emergency personnel if necessary. (Requires activation and an additional fee.)
- **Accident Assist:** An advisor can provide step-by-step guidance following an accident.
- **Remote Door Unlock:** To contact the center, call 1-888-4-ONSTAR. You will be required to provide your security information. An advisor will send a command to your vehicle to unlock itself. The advisor can delay unlocking your vehicle. Remote Door Unlock is disabled 48 hours after the vehicle is parked to maintain the battery charge.
- **Vehicle Locator Service:** To contact the center, call 1-888-4-ONSTAR. You will be required to provide your security information. An advisor will send a command to your vehicle to sound the horn and/or flash the lamps.

In order to provide you with excellent service, calls with the OnStar Center may be monitored or recorded.

- **Route Support:** An advisor can provide directions or guidance to anywhere you want to go. In addition, they can help you locate gas stations, rest areas, ATMs, hospitals, hotels, stores, eateries and more.
- **Ride Assist:** An advisor can locate transportation in the event that you are unable to drive.
- **Concierge Services:** The concierge advisor can obtain tickets, reservations or help with vacation/trip planning and other unique items and services.

OnStar System Limitations

Complete limitations can be found on the subscriber services agreement.

In order to provide you with excellent service, calls with the OnStar Center may be monitored or recorded.

OnStar Service is:

- available in the 48 contiguous United States, Alaska, Hawaii and Canada;
- available when the vehicle is within the operating range of a cellular provider;
- subject to limitations caused by atmospheric conditions, such as severe weather or topographical conditions, such as mountainous terrain.
- subject to cellular carrier equipment limitations.

Global positioning capabilities will not be available if satellite signals are obstructed.

OnStar will not function if the vehicle's battery is discharged or disconnected. It may also be inoperative if the vehicle is in an accident and the OnStar or vehicle electrical system components are damaged.

OnStar is the communication link between you and existing governmental emergency roadside service providers. OnStar will receive your call and use reasonable effort to contact an appropriate provider. OnStar cannot promise that the providers will respond in a timely manner or at all.

Sunroof (If Equipped)

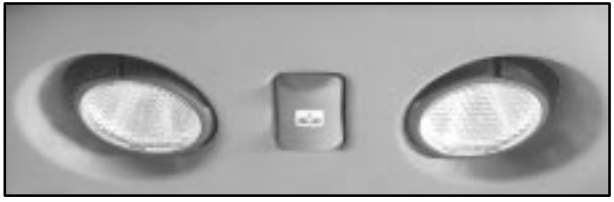

Your vehicle may be equipped with a power sliding sunroof. To open or close your sunroof, the ignition needs to be on or RAP needs to be active. See "Retained Accessory Power" in the Index.

Press and release the rear side of the button located in the front overhead console to express-open the glass panel and sunshade. To close the glass panel, press and hold the front of the button. The glass will not be fully seated unless the button is held until the glass stops moving. With the sunroof closed, press the forward side of the button to open the sunroof to the vent position.

The sunroof is also equipped with a sunshade which you can pull forward to block sun rays.

If a hand, arm, or other object is blocking the sunroof glass panel as it is closing, the glass panel will stop at the obstruction. After the obstruction is removed, the glass panel can be closed or opened.

Use care not to leave the sunroof open for long periods of time as debris may collect in the tracks.

If the battery has been recharged, disconnected or is not working, you may need to reprogram the sunroof. To do this, start the vehicle and press the forward side of the sunroof switch until the glass panel moves to a fully closed position. Release, and press again to move to the vent position which occurs when the sunroof is fully tilted rearward. This will reset the memory and enable the sunroof to function properly.

HomeLink® Transmitter

This device complies with Part 15 of the FCC Rules. Operation is subject to the following two conditions: (1) this device may not cause harmful interference, and (2) this device must accept any interference received, including interference that may cause undesired operation.

This device complies with RSS-210 of Industry Canada. Operation is subject to the following two conditions: (1) this device may not cause interference, and (2) this device must accept any interference, including interference that may cause undesired operation of the device.

Changes and modifications to this system by other than an authorized service facility could void authorization to use this equipment.

Programming the HomeLink Transmitter

Do not use the HomeLink Transmitter with any garage door opener that does not have the stop and reverse feature. This includes any garage door opener model manufactured before April 1, 1982.

Be sure that people and objects are clear of the garage door you are programming.

It is recommended that a new battery be installed in your hand-held transmitter for quicker and more accurate transmission of the radio frequency.

Your vehicle's engine should be turned off while programming the transmitter. Follow these steps to program up to three channels:

1. Decide which one of the three channels (one of the HomeLink buttons) you want to program.
2. Press and hold the desired button on HomeLink through Step 3.
3. When the HomeLink indicator light begins to blink slowly (this may take up to 30 seconds), hold the hand-held transmitter about 1 to 3 inches (3 to 8 cm) away from HomeLink and then press and hold the transmit button on the hand-held transmitter. Continue to hold both buttons until the indicator light on HomeLink begins to flash rapidly (this may take up to 90 seconds).

If you have trouble programming HomeLink, make sure that you have followed the directions exactly as described and that the battery in the hand-held transmitter is not weak. If you still cannot program it, move the hand-held transmitter to the left or right or forward or backward or flip it upside down. HomeLink may not work with older garage door openers that do not meet current Federal Consumer Safety Standards. If you cannot program the transmitter after repeated attempts, refer to "Training a Garage Door Opener with Rolling Codes" later in this section or contact the manufacturer of HomeLink at 1-800-355-3515, or on the internet at www.homelink.com.

Be sure to keep the original hand-held transmitter in case you need to erase and reprogram HomeLink.

Training a Garage Door Opener with a “Rolling Code” Feature (If Equipped)

If you have not previously programmed the hand-held transmitter to HomeLink, see “Programming the HomeLink Transmitter” listed previously. If you have completed this programming already, you now need to train the garage door opener motor head unit to recognize HomeLink.

1. Find the “Learn” or “Smartbutton” on the garage door opener motor head unit. The exact location and color will vary by garage door opener brand. If you have difficulty finding the Learn or Smart button, refer to your garage door opener owner’s manual or contact the manufacturer of HomeLink at 1-800-355-3515, or on the internet at www.homelink.com.

   Because of the steps involved, it may be helpful to have another person assist in programming the transmitter.

2. Press the Learn or Smart button on the garage door opener motor head unit. An indicator light will begin to flash when the motor head unit enters the training mode.

   Following this step, you have 30 seconds to start Step 3.

3. Return to HomeLink in your vehicle and firmly press and release the programmed HomeLink button three times.

The rolling-code garage door opener should now recognize HomeLink. You may either use HomeLink or the hand-held transmitter to open the garage door.

If after following these instructions, you still have problems training the garage door opener, contact the manufacturer of HomeLink at 1-800-355-3515, or on the internet at www.homelink.com.

Canadian Programming

Canadian Owners: During programming, the hand-held transmitter may automatically stop transmitting after two seconds. In this case, you should press and hold the HomeLink button (see Steps 2 and 3 under “Programming the HomeLink Transmitter”) while you press and re-press (cycle) your hand-held transmitter every two seconds until HomeLink is trained.

Operating the HomeLink Transmitter

Press and hold the appropriate button on HomeLink for at least half of a second. The indicator light will come on while the signal is being transmitted.

Erasing Channels

To erase all three programmed channels, hold down the two outside buttons until the indicator light begins to flash (approximately 20 seconds). Release both buttons.

Resetting Defaults

To reset HomeLink to default settings, hold down the two outside buttons until the indicator light begins to flash (approximately 20 seconds). Continue to hold both buttons until the HomeLink indicator light turns off and then release both buttons.

Accessories

Accessories for the HomeLink Transmitter are available from the manufacturer of the unit. If you would like additional information, please contact the manufacturer of HomeLink at 1-800-355-3515, or on the internet at www.homelink.com.

The Instrument Panel - Your Information System

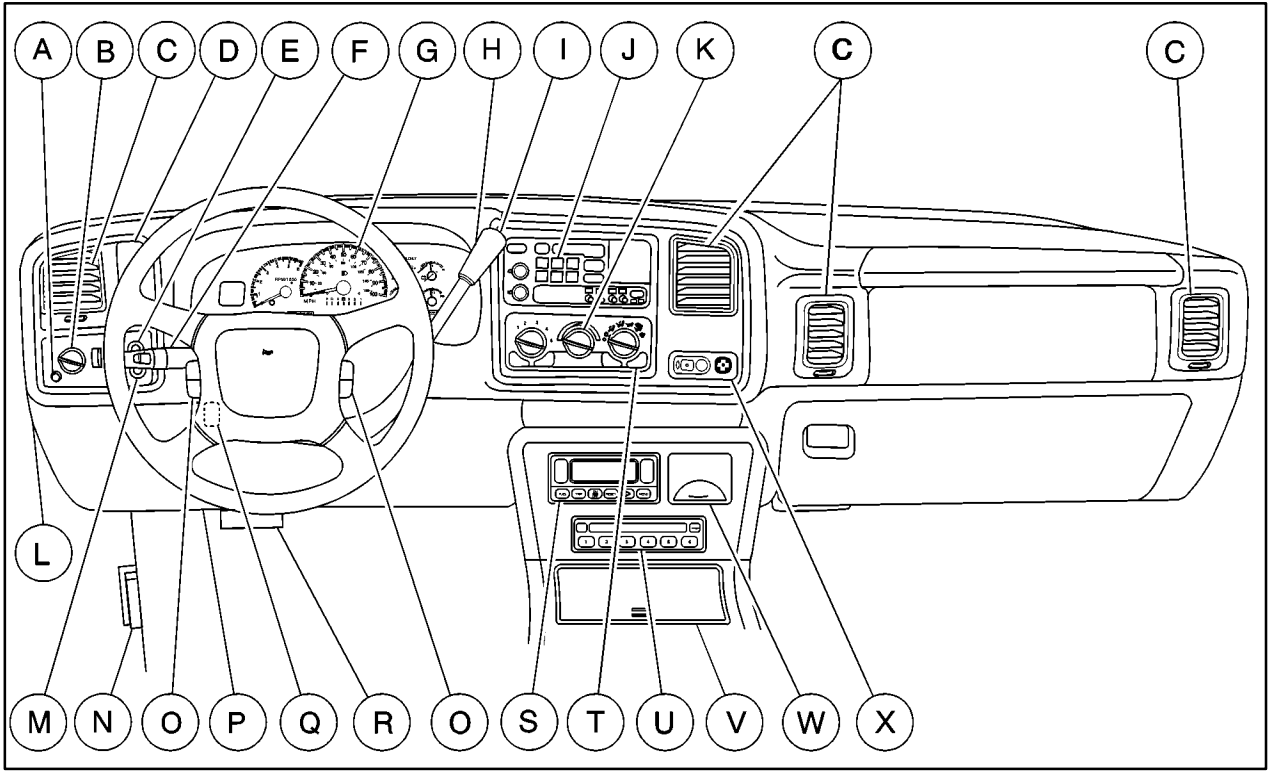

The main components of your instrument panel are the following:

A. Dome Lamp Override Switch
B. Exterior Lamp Controls
C. Air Outlets
D. Storage Compartment
E. Rear Wisher Wiper
F. Multifunction Lever
G. Instrument Panel Cluster
H. Shift Lever
I. Tow/Haul Button
J. Audio System
K. Comfort Control System
L. Instrument Panel Fuse Block
M. Fog Lamps Button
N. Hood Release
O. Audio Steering Wheel Controls
P. Center Instrument Panel Utility Block
Q. Tilt Lever
R. Parking Brake Release
S. Secondary Information Center (SIC)
T. Rear Window Defogger Switch
U. Compact Disc Changer
V. Ashtray
W. Accessory Power Outlet
X. OnStar Buttons

Instrument Panel Cluster

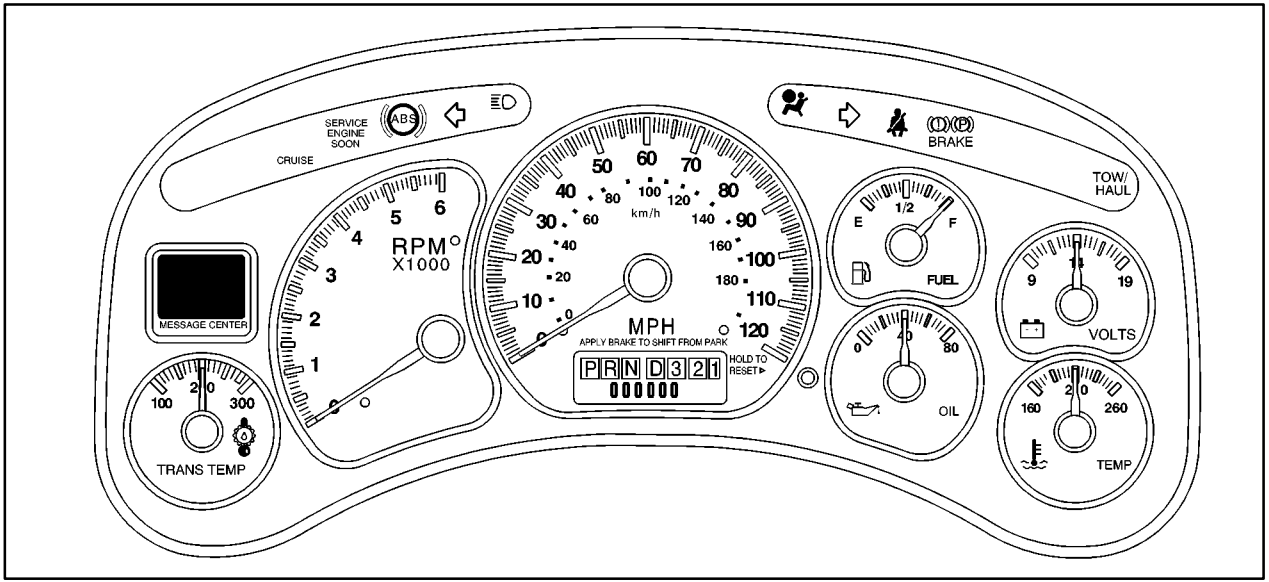

United States version shown, Canada similar.

Your instrument cluster is designed to let you know at a glance how your vehicle is running. You'll know how fast you're going, about how much fuel you have and many other things you'll need to know to drive safely and economically.

Speedometer and Odometer

Your speedometer lets you see your speed in both miles per hour (mph) and kilometers per hour (km/h). Your odometer shows how far your vehicle has been driven, in either miles (used in the United States) or kilometers (used in Canada).

Trip Odometer

The trip odometer can tell you how far your vehicle has been driven since you last set the trip odometer to zero.

Press the reset button to toggle between the trip odometer and the regular odometer. Holding the reset button for two seconds while the trip odometer is displayed will reset it.

To display the odometer reading with the ignition off, press the reset button.

Engine Hour Meter Display

The odometer can also display the number of hours the engine has run. To display the hour meter, turn the ignition off, press and hold the reset button for at least four seconds. The hour meter will be displayed for up to 30 seconds, or until the ignition is turned on.

Tachometer

Your tachometer displays the engine speed in revolutions per minute (rpm).

Warning Lights, Gages and Indicators

This part describes the warning lights and gages on your vehicle. The pictures will help you locate them.

Warning lights and gages can signal that something is wrong before it becomes serious enough to cause an expensive repair or replacement. Paying attention to your warning lights and gages could also save you or others from injury.

Warning lights come on when there may be or is a problem with one of your vehicle's functions. As you will see in the details on the next few pages, some warning lights come on briefly when you start the engine just to let you know they're working. If you are familiar with this section, you should not be alarmed when this happens.

Gages can indicate when there may be or is a problem with one of your vehicle's functions. Often gages and warning lights work together to let you know when there's a problem with your vehicle.

When one of the warning lights comes on and stays on when you are driving, or when one of the gages shows there may be a problem, check the section that tells you what to do about it. Please follow this manual's advice. Waiting to do repairs can be costly -- and even dangerous. So please get to know your warning lights and gages. They're a big help.

Your vehicle also has a message center that works along with warning lights and gages. See "Message Center" in the Index.

Safety Belt Reminder Light

When the key is turned to RUN or START, a chime will come on for about six seconds to remind people to fasten their safety belts, unless the driver's safety belt is already buckled.

The safety belt light will also come on and stay on for about 20 seconds, then it will flash for about 55 seconds.

If the driver's belt is already buckled, neither the chime nor the light will come on.

Air Bag Readiness Light

There is an air bag readiness light on the instrument panel, which shows the air bag symbol. The system checks the air bag's electrical system for malfunctions. The light tells you if there is an electrical problem. The system check includes the air bag sensors, the air bag modules, the wiring and the crash sensing and diagnostic module. For more information on the air bag system, see "Air Bag" in the Index.

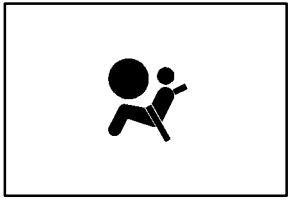

This light will come on when you start your vehicle, and it will flash for a few seconds. Then the light should go out. This means the system is ready.

If the air bag readiness light stays on after you start the vehicle or comes on when you are driving, your air bag system may not work properly. Have your vehicle serviced right away.

⚠ CAUTION:

If the air bag readiness light stays on after you start your vehicle, it means the air bag system may not be working properly. The air bags in your vehicle may not inflate in a crash, or they could even inflate without a crash. To help avoid injury to yourself or others, have your vehicle serviced right away if the air bag readiness light stays on after you start your vehicle.

The air bag readiness light should flash for a few seconds when you turn the ignition key to RUN. If the light doesn't come on then, have it fixed so it will be ready to warn you if there is a problem.

Voltmeter

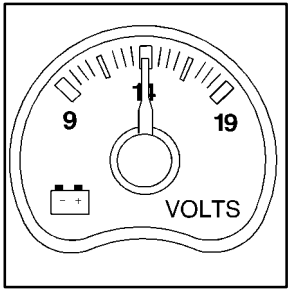

United States

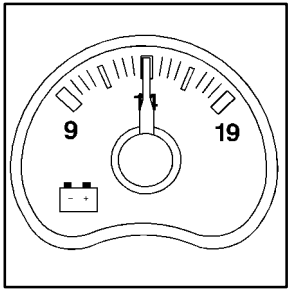

Canada

When your engine is not running, but the ignition is in RUN, this gage shows your battery's state of charge in DC volts.

When the engine is running, the gage shows the condition of the charging system. Readings between the low and high warning zones indicate the normal operating range.

Readings in the low warning zone may occur when a large number of electrical accessories are operating in the vehicle and the engine is left at an idle for an extended period. This condition is normal since the charging system is not able to provide full power at engine idle. As engine speeds are increased, this condition should correct itself as higher engine speeds allow the charging system to create maximum power.

You can only drive for a short time with the reading in either warning zone. If you must drive, turn off all unnecessary accessories.

Readings in either warning zone indicate a possible problem in the electrical system. Have the vehicle serviced as soon as possible.

Brake System Warning Light

With the ignition on, the brake system warning light will flash when you set the parking brake. The light will flash if the parking brake doesn't release fully. If you try to drive with the parking brake engaged, a chime will sound when the vehicle speed is greater than 3 mph (5 km/h).

Your vehicle's hydraulic brake system is divided into two parts. If one part isn't working, the other part can still work and stop you. For good braking, though, you need both parts working well.

If the warning light comes on, there could be a brake problem. Have your brake system inspected right away.

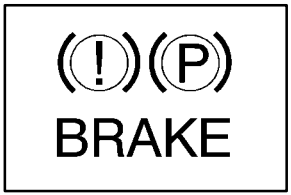

United States

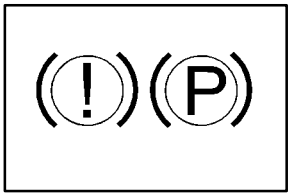

Canada

This light should come on briefly when you turn the ignition key to RUN. If it doesn't come on then, have it fixed so it will be ready to warn you if there's a problem.

If the light comes on while you are driving, pull off the road and stop carefully. You may notice that the pedal is harder to push. Or, the pedal may go closer to the floor. It may take longer to stop. If the light is still on, have the vehicle towed for service. See “Towing Your Vehicle” in the Index.

⚠ CAUTION:

Your brake system may not be working properly if the brake system warning light is on. Driving with the brake system warning light on can lead to an accident. If the light is still on after you’ve pulled off the road and stopped carefully, have the vehicle towed for service.

Anti-Lock Brake System Warning Light

With the anti-lock brake system, this light will come on when you start your engine and may stay on for several seconds. That’s normal.

If the light stays on, or comes on when you’re driving, your vehicle needs service. If the regular brake system warning light isn’t on, you still have brakes, but you don’t have anti-lock brakes. If the regular brake system warning light is also on, you don’t have anti-lock brakes and there’s a problem with your regular brakes. See “Brake System Warning Light” earlier in this section.

The anti-lock brake system warning light should come on briefly when you turn the ignition key to RUN. If the light doesn’t come on then, have it fixed so it will be ready to warn you if there is a problem.

Engine Coolant Temperature Gage

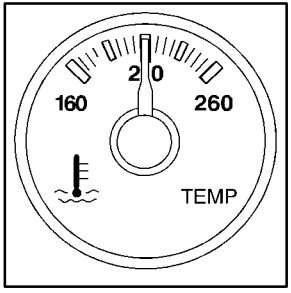

United States

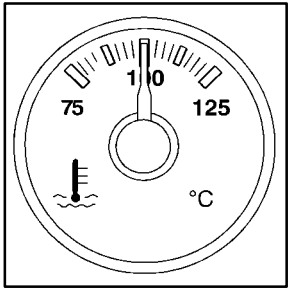

Canada

This gage shows the engine coolant temperature.

It also provides an indicator of how hard your vehicle is working. During a majority of the operation, the gage will read 210°F (100°C) or less. If you are pulling a load or going up hills, it is normal for the temperature to fluctuate and approach the 250°F (122°C) mark. If the gage reaches the 260°F (125°C) mark, it indicates that the cooling system is working beyond its capacity.

The “Problems on the Road,” section of this manual shows what to do. See “Engine Overheating” in the Index.

Transmission Temperature Gage

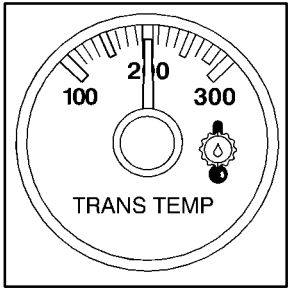

United States

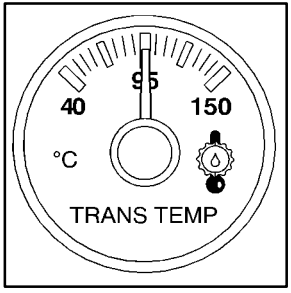

Canada

When your ignition is on, the gage shows the temperature of the transmission fluid. The normal operating range is from 100°F (38°C) to about 265°F (130°C).

At approximately 265°F (130°C), the message center will display a TRANS FLUID HOT message and the transmission will enter a transmission protection mode. When the transmission enters the protection mode, you may notice a change in the transmission shifting patterns. The transmission will return to normal shifting patterns when the transmission fluid temperature falls below 260°F (127°C).

See “Message Center” in the Index for further information.

If the transmission fluid reaches temperatures of approximately 275°F (135°C) or greater, the message center will display a TRANS HOT...IDLE ENG warning message. Pull the vehicle off the roadway when it is safe to do so. Set the parking brake, place the transmission in PARK (P) and allow the engine to idle until the transmission temperature falls below 260°F (127°C). If the transmission continues to operate above 265°F (130°C), please contact your nearest dealer or the GM Roadside Assistance Center.

NOTICE:

If you keep driving your vehicle with the transmission temperature gage above the normal operating range, you can damage the transmission. This could lead to costly repairs that may not be covered under your warranty.

The following situations can cause the transmission to operate at higher temperatures:

- Towing a trailer
- Hot outside air temperatures
- Hauling a large or heavy load
- Low transmission fluid level
- High transmission fluid level
- Restricted air flow to the radiator and the auxiliary transmission oil cooler (if equipped).

A temporary solution to hotter transmission operating temperatures may be to let the transmission cool down. If the transmission is operated at higher temperatures on a frequent basis, see “Scheduled Maintenance” in the Index for the proper transmission maintenance intervals.

Malfunction Indicator Lamp (Service Engine Soon Light in the United States or Check Engine Light in Canada)

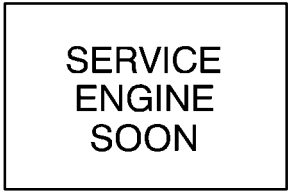

United States

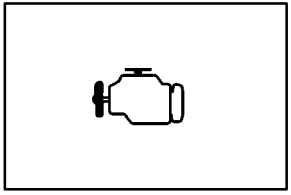

Canada

Your vehicle is equipped with a computer which monitors operation of the fuel, ignition and emission control systems.

This system is called OBD II (On-Board Diagnostics-Second Generation) and is intended to assure that emissions are at acceptable levels for the life of the vehicle, helping to produce a cleaner environment. The SERVICE ENGINE SOON or CHECK ENGINE light comes on to indicate that there is a problem and service is required. Malfunctions often will be indicated by the system before any problem is apparent. This may prevent more serious damage to your vehicle. This system is also designed to assist your service technician in correctly diagnosing any malfunction.

NOTICE:

If you keep driving your vehicle with this light on, after a while, your emission controls may not work as well, your fuel economy may not be as good and your engine may not run as smoothly. This could lead to costly repairs that may not be covered by your warranty.

NOTICE:

Modifications made to the engine, transmission, exhaust, intake or fuel system of your vehicle or the replacement of the original tires with other than those of the same Tire Performance Criteria (TPC) can affect your vehicle's emission controls and may cause the SERVICE ENGINE SOON or CHECK ENGINE light to come on. Modifications to these systems could lead to costly repairs not covered by your warranty. This may also result in a failure to pass a required Emission Inspection/Maintenance test.

This light should come on, as a check to show you it is working, when the ignition is on and the engine is not running. If the light doesn't come on, have it repaired. This light will also come on during a malfunction in one of two ways:

- **Light Flashing --** A misfire condition has been detected. A misfire increases vehicle emissions and may damage the emission control system on your vehicle. Dealer or qualified service center diagnosis and service may be required.
- **Light On Steady --** An emission control system malfunction has been detected on your vehicle. Dealer or qualified service center diagnosis and service may be required.

If the Light Is Flashing

The following may prevent more serious damage to your vehicle:

- Reducing vehicle speed.
- Avoiding hard accelerations.
- Avoiding steep uphill grades.
- If you are towing a trailer, reduce the amount of cargo being hauled as soon as it is possible.

If the light stops flashing and remains on steady, see "If the Light Is On Steady" following.

If the light continues to flash, when it is safe to do so, *stop the vehicle*. Find a safe place to park your vehicle. Turn the key off, wait at least 10 seconds and restart the engine. If the light remains on steady, see "If the Light Is On Steady" following. If the light is still flashing, follow the previous steps, and drive the vehicle to your dealer or qualified service center for service.

If the Light Is On Steady

You may be able to correct the emission system malfunction by considering the following:

Did you recently put fuel into your vehicle?

If so, reinstall the fuel cap, making sure to fully install the cap. See "Filling Your Tank" in the Index. The diagnostic system can determine if the fuel cap has been left off or improperly installed. A loose or missing fuel cap will allow fuel to evaporate into the atmosphere. A few driving trips with the cap properly installed should turn the light off.

Did you just drive through a deep puddle of water?

If so, your electrical system may be wet. The condition will usually be corrected when the electrical system dries out. A few driving trips should turn the light off.

Have you recently changed brands of fuel?

If so, be sure to fuel your vehicle with quality fuel. See “Fuel” in the Index. Poor fuel quality will cause your engine not to run as efficiently as designed. You may notice this as stalling after start-up, stalling when you put the vehicle into gear, misfiring, hesitation on acceleration or stumbling on acceleration. (These conditions may go away once the engine is warmed up.) This will be detected by the system and cause the light to turn on.

If you experience one or more of these conditions, change the fuel brand you use. It will require at least one full tank of the proper fuel to turn the light off.

If none of the above steps have made the light turn off, have your dealer or qualified service center check the vehicle. Your dealer has the proper test equipment and diagnostic tools to fix any mechanical or electrical problems that may have developed.

Emissions Inspection and Maintenance Programs

Some state/provincial and local governments have or may begin programs to inspect the emission control equipment on your vehicle. Failure to pass this inspection could prevent you from getting a vehicle registration.

Here are some things you need to know in order to help your vehicle pass an inspection:

Your vehicle will not pass this inspection if the SERVICE ENGINE SOON or CHECK ENGINE light is on or not working properly.

Your vehicle will not pass this inspection if the OBD (on-board diagnostic) system determines that critical emission control systems have not been completely diagnosed by the system. The vehicle would be considered not ready for inspection. This can happen if you have recently replaced your battery or if your battery has run down. The diagnostic system is designed to evaluate critical emission control systems during normal driving. This may take several days of routine driving. If you have done this and your vehicle still does not pass the inspection for lack of OBD system readiness, see your dealer or qualified service center to prepare the vehicle for inspection.

Oil Pressure Gage

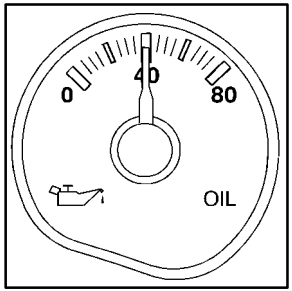

United States

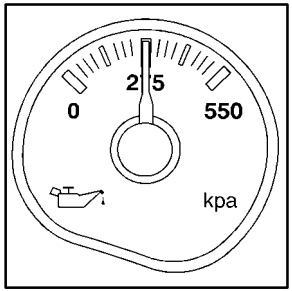

Canada

The oil pressure gage shows the engine oil pressure in psi (pounds per square inch) when the engine is running. Canadian vehicles indicate pressure in kPa (kilopascals).

Oil pressure may vary with engine speed, outside temperature and oil viscosity, but readings above the low pressure zone indicate the normal operating range.

A reading in the low pressure zone may be caused by a dangerously low oil level or some other problem causing low oil pressure. Check your oil as soon as possible. See “Check Eng Oil Pressure” and “Engine Oil” in the Index.

⚠ CAUTION:

Don’t keep driving if the oil pressure is low. If you do, your engine can become so hot that it catches fire. You or others could be burned. Check your oil as soon as possible and have your vehicle serviced.

NOTICE:

Damage to your engine from neglected oil problems can be costly and is not covered by your warranty.

Cruise Light

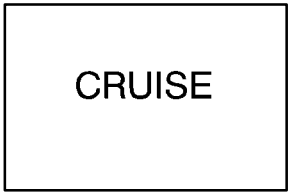

United States

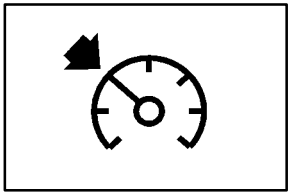

Canada

The CRUISE light comes on whenever you set your cruise control. See “Cruise Control” in the Index.

Tow/Haul Light

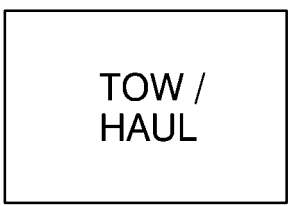

This light is displayed when the tow/haul mode has been activated.

For more information, see “Tow/Haul Mode” in the Index.

Fuel Gage

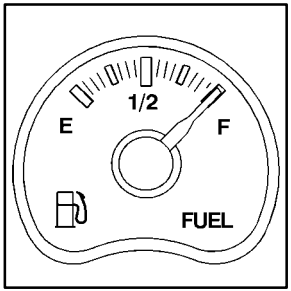

United States

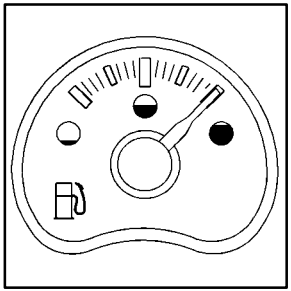

Canada

The fuel gage, when the ignition is on, tells you about how much fuel you have left in your tank.

The gage will first indicate empty before you are out of fuel, and you should get more fuel as soon as possible.

Here are some situations you may experience with your fuel gage. None of these indicate a problem with the fuel gage.

- At the gas station, the fuel pump shuts off before the gage reads full.
- It takes a little more or less fuel to fill up than the fuel gage indicated. For example, the gage may have indicated the tank was half full, but it actually took a little more or less than half the tank's capacity to fill the tank.
- The gage goes back to empty when you turn off the ignition.

Message Center

The message center is located on the left side of the instrument panel cluster. It gives you important safety and maintenance facts. When you turn the ignition on, the entire center lights up for just a few seconds. As needed, the message center will display one of the following messages. The message center is capable of alternating among different messages if needed.

Battery

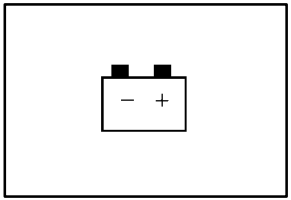

If this message is displayed when the engine is running, you may have a problem with your charging system.

The battery display will also stay on while the key is in RUN until the engine is started.

If the message stays on after starting the engine it could indicate a problem with the generator drive belt, or some other charging system problem. Have it checked right away. Driving with this message displayed could drain your battery.

If you must drive a short distance with this message displayed, it helps to turn off all your accessories, such as the radio and the air conditioner.

Trans Fluid Hot

Your vehicle has a transmission temperature warning display contained in the message center.

TRANS
FLUID
HOT

If the transmission fluid temperature becomes high, the message center will display this message.

When the transmission enters the protection mode, you may notice a change in the transmission shifting patterns. When the transmission fluid temperature returns to normal, the display will turn off and the transmission shifting patterns will return to normal.

NOTICE:

If you keep driving your vehicle with the transmission TRANS FLUID HOT message displayed, you can damage the transmission. This could lead to costly repairs that may not be covered under your warranty.

The following situations can cause the transmission to operate at higher temperatures:

- Towing a trailer
- Hot outside air temperatures
- Hauling a large or heavy load
- Low transmission fluid level
- High transmission fluid level
- Restricted air flow to the radiator and the auxiliary transmission oil cooler (if equipped).

A temporary solution to hotter transmission operating temperatures may be to let the transmission cool down. If the transmission is operated at higher temperatures on a frequent basis, see “Scheduled Maintenance” in the Index for the proper transmission maintenance intervals.

Trans Hot...Idle Engine

Your vehicle has a transmission over-temperature display contained in the message center.

TRANS
HOT... IDLE
ENGINE

If this warning message is displayed, pull the vehicle off the roadway when it is safe to do so.

Set the parking brake and place the transmission in PARK (P). Idle the engine until the message center no longer displays a message. If idling the engine does not turn the warning message off after 10 to 15 minutes, contact your nearest dealer or the GM Roadside Assistance Center. See “Roadside Assistance” in the Index.

NOTICE:

If you keep driving your vehicle with the transmission TRANS HOT...IDLE ENGINE message displayed, you can damage the transmission. This could lead to costly repairs that may not be covered under your warranty.

The following situations can cause the transmission to operate at higher temperatures:

- Towing a trailer
- Hot outside air temperatures
- Hauling a heavy load
- Low transmission fluid level
- High transmission fluid level
- Restricted air flow to the radiator and the auxiliary transmission oil cooler (if equipped).

A temporary solution to hotter transmission operating temperatures may be to let the transmission cool down. If the transmission is operated at higher temperatures on a frequent basis, see “Scheduled Maintenance” in the Index for the proper transmission maintenance intervals.

Low Coolant

LOW
COOLANT

This message is displayed when the cooling system is low on coolant.

The engine may overheat. See “Engine Coolant” in the Index and have your vehicle serviced as soon as you can.

Check Coolant Temp

CHECK
COOLANT
TEMP

This message is displayed when the cooling system temperature gets hot.

Check the coolant temperature gage and the coolant level. See “Engine Coolant,” “Engine Coolant Temperature Gage” and “Engine Overheating” in the Index for further information.

Engine Overheated

ENGINE
OVER –
HEATED

This message is displayed when the cooling system temperature gets too hot.

This message will be displayed after the air conditioning system has automatically turned off for the engine coolant protection mode. See “Engine Overheating” in the Index for further information.

Reduced Engine Power

REDUCED
ENGINE
POWER

This message is displayed when the cooling system temperature gets too hot and the engine further enters the engine coolant protection mode.

See “Engine Overheating” in the Index for further information.

Check Eng Oil Pressure

CHECK
ENG OIL
PRESSURE

This message is displayed when the engine oil pressure is low.

See “Oil Pressure Gage” in the Index for more information.

Check Eng Oil Level

CHECK
ENG OIL
LEVEL

This message is displayed when the engine oil level is low.

Once oil is added, it may need time to drain and settle in the engine before this message will turn off. It is best to let the engine cool down (if it is hot) or warm up (if it is cold) and cycle the ignition to be sure this message turns off. Refer to the dipstick for the correct level.

See “Engine Oil” in the Index on how to check the oil level and for what type of oil to add.

Change Engine Oil

CHANGE ENGINE OIL

This message is displayed when the engine oil needs to be changed. The message is only displayed for 15 seconds at the start of each ignition cycle.

When you change the engine oil, be sure to reset the Engine Oil Life Monitor. See “Engine Oil, When to Change” in the Index.

Security

SECURITY

This message is displayed when the content theft-deterrent system has been activated and also monitors the Passlock® system.

If the security message is displayed continuously while driving and stays on, there may be a problem with the Passlock system. Your vehicle will not be protected by Passlock, and you should see your GM dealer.

Low Washer Fluid

LOW WASHER FLUID

This message is displayed when the vehicle is low on windshield washer fluid. The message is only displayed for 15 seconds each ignition cycle.

For more information, see “Windshield Washer Fluid” in the Index.

Service Ride Control

SERVICE RIDE CONTROL

This message is displayed when a possible problem exists with the Autoride™ system.

For more information, see “Autoride™” in the Index.

Cargo Door Ajar

CARGO
DOOR
AJAR

This message is displayed when the rear liftglass or liftgate is ajar when the ignition is in RUN.

Low Fuel

LOW
FUEL

This message is displayed when your vehicle is low on fuel.

Refer to the fuel gage for a better indication of the amount of fuel remaining in the fuel tank.

Secondary Information Center (SIC)

This section explains the features of your SIC. The SIC provides instant information about fuel, mileage and vehicle history in addition to allowing you to personalize certain features of your vehicle. If you would like to skip to the section on personalizing your vehicle, see the section under MENU.

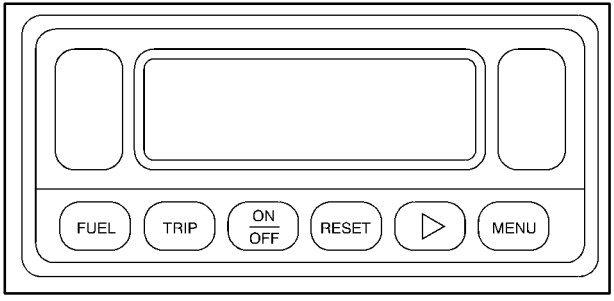

Fuel

- Each press of the FUEL button will change the display between the fuel remaining range, average fuel economy, instantaneous fuel economy and a blank display.
- The average fuel economy can be reset using the RESET button.

Trip

Each press of the TRIP button will change the display between personal trip computer, business trip computer, timer, vehicle history, annual mileage and a blank display.

Personal Trip Computer and Business Trip Computer

- Each press of the arrow button will change the display between turn on/off, trip odometer, fuel used, average fuel economy and average speed.
- The ON/OFF button will turn the trip computer on and off. The information on the trip computer only gets updated when it is turned on. The personal and business computers are independent, i.e. turning one of them on does not turn the other off.
- All information associated with the trip computer will be reset when the RESET button is pressed.
- If the RESET button is pressed and held for more than two seconds, all of the trip computer settings will reset starting from the last ignition cycle (turning the ignition from OFF to RUN). This feature is for someone who has forgotten to reset the trip computer when pulling out of the driveway and does not realize it until after driving for awhile.

Timer

- Each press of the ON/OFF button will turn the timer on or off.
- The RESET button will reset the timer to 00:00:00.
- If turned on, the timer will accumulate whenever the SIC is powered (the engine does not have to be running).
- The timer will rollover after 99:59:59.

Vehicle History Last 15 Days

- The first press of the arrow button will display the maximum speed and accumulated mileage for the current day.
- Every press of the arrow button after will display the maximum speed and accumulated mileage for the previous day.
- This feature requires the date and time to be set correctly. Refer to the setting of day/date/time under the MENU button explained later in this section.

Annual Mileage

- The annual mileage displayed is the mileage accumulated since the annual mileage was reset.
- Pressing the RESET button will reset the annual mileage to 0.
- Pressing the arrow button will display the ratio of personal trip computer mileage to annual mileage as a percent.
- Pressing the arrow button again will display the ratio of business trip computer mileage to annual mileage as a percent.

Menu

Press the MENU button to choose a feature you would like to personalize (the features are listed below). Each press of the button will display a new item that can be personalized. Use the arrow button to choose the setting you would like to use within the chosen feature. For example: Say you would like to personalize the automatic door locks so that the automatic locking feature is disabled. You would do the following:

1. First press the MENU button until you reach the Automatic Door Lock screen.
2. Next, press the arrow button until you find the Disabled setting.
3. The setting is now actually set without having to do anything else. You can do one of three things at this point:
   - You can leave the personalization mode by pressing FUEL or TRIP. The SIC will then display the day/date.

- You can just let the SIC exit the personalization mode on its own by waiting approximately 15 seconds without touching any buttons. The SIC will then display the day/date.
- Or you can press the MENU key to move on to the next programmable feature.

The following is a list of the personal settings that can be changed:

Automatic Door Lock

- **Enabled**: Doors automatically lock when the vehicle is shifted out of Park (P).
- **Disabled**: Doors do not lock automatically.

Automatic Door Unlock

- **Driver**: Driver's door unlocks when the vehicle is shifted into Park (P).
- **All**: All doors unlock when the vehicle is shifted into Park (P).
- **Disabled**: Doors do not unlock automatically.

Remote Lock Feedback

- **Horn**: Horn chirps on second press of the LOCK button on the keyless entry transmitter.
- **Lamps**: Parking lamps flash on each press of the LOCK button on the keyless entry transmitter.
- **Horn and Lamps**: Parking lamps flash on each press, horn chirps on second press of UNLOCK on the keyless entry transmitter.
- **None**: No horn or lamp feedback to the LOCK button on the keyless entry transmitter.

Remote Unlock Feedback

- **Horn**: Horn chirps on each press of the UNLOCK button on the keyless entry transmitter.
- **Lamps**: Parking lamps flash on each press of the UNLOCK button on the keyless entry transmitter.
- **Horn and Lamps**: Parking lamps flash and horn chirps on each press of the UNLOCK button on the keyless entry transmitter.
- **None**: No horn or lamp feedback will occur when the UNLOCK button on the keyless entry transmitter is pressed.

Headlamp Delay

- **None**: Headlamps do not stay on after the ignition is turned to OFF.
- **10/20/30/60/120/180 Seconds**: Amount of time headlamps stay on after the ignition is turned to OFF when it is dark (switch must be in auto headlamp position).

Perimeter Lamps

- **Enabled**: Parking lamps, headlamps and puddle lamps turn on for 40 seconds with the UNLOCK button on the keyless entry transmitter. This feature only operates when it is dark.
- **Disabled**: Feature disabled, no perimeter lamps will come on.

Alarm Warning

- **Horn**: Horn will sound when alarm is active.
- **Lamps**: Headlamps and park lamps will cycle on and off when alarm is activated.
- **Horn and Lamps** : Horn and lamps will alternate when the alarm is activated.
- **None**: No alarm warning will come on.

Language

- **English**: All information displayed in English.
- **French**: All information displayed in French.
- **Spanish**: All information displayed in Spanish.
- **Arabic**: All information displayed in Arabic.

Display Units

- **English**: Units displayed in English units.
- **Metric**: Units displayed in metric units.

Day/Date/Time

- The RESET button will enable the operator to reset the day/date/time. Each press of the RESET button will scroll through the following: set year, set month, set day, set hour, set minutes and set AM/PM.
- Whichever is currently selected (i.e. year, month, day, etc.) will flash. The arrow button is then used to adjust the value. Each press of the arrow button will change the value by one. If the arrow button is pushed and held, the value will keep changing until the button is released.
- While in menu mode, the SIC will display the day/date if no buttons have been pressed for more than 15 seconds.

Language and Personalization Reset

1. Press and hold the MENU button. After two seconds, the display will begin cycling through the languages at one second intervals. Release the MENU button when the desired language is displayed.
2. The previous action will also reset the personalization values to their factory default settings which are as follows.

- **Automatic Door Lock:** Enabled
- **Automatic Door Unlock:** All
- **Remote Lock Feedback:** Horn
- **Remote Unlock Feedback:** Lamps
- **Headlamp Delay:** 30 seconds
- **Perimeter Lamps:** Enabled
- **Alarm Warning:** Horn and Lamps
- **Display Units:** English

Section 3 Comfort Controls and Audio Systems

In this section, you'll find out how to operate the comfort control and audio systems offered with your vehicle. Be sure to read about the particular systems supplied with your vehicle.

3-2 Comfort Controls
3-2 Electronic Climate Control System
3-8 Air Conditioning
3-8 Heating
3-9 Defogging and Defrosting
3-9 Rear Window Defogger
3-10 Ventilation System
3-11 Audio Systems
3-11 Setting the Clock
3-12 AM-FM Stereo with Cassette Tape Player (Bose®)
3-17 Rear Seat Audio (RSA)
3-19 Compact Disc Changer
3-22 Theft-Deterrent Feature
3-24 Audio Steering Wheel Controls
3-25 Understanding Radio Reception
3-25 Tips About Your Audio System
3-26 Care of Your Cassette Tape Player
3-27 Care of Your Compact Discs
3-27 Care of Your Compact Disc Player
3-27 Fixed Mast Antenna

Comfort Controls

Electronic Climate Control System

Fan Knob

The knob on the left side of the electronic climate control panel regulates the fan speed. To manually increase airflow, turn the knob clockwise. To manually decrease airflow, turn it counterclockwise.

OFF: If the knob is in OFF, outside air will still enter the vehicle, and will be directed based on the position of the mode knob.

AUTO (Automatic): If the knob is in AUTO, the fan speed will vary as the system maintains the selected temperature.

When both the fan knob and mode knobs are in the AUTO position, the system will then automatically maintain the desired cabin temperature selected. Manual operation is also available.

Temperature Knob

The middle knob on the control panel lets you select the desired air temperature in your vehicle. Turn the knob clockwise toward 82 for warmer air. Turn the knob counterclockwise toward 66 for cooler air. When the system is set for automatic operation, sensors will regulate the fan speed.

(Full hot): If you turn the temperature knob past 82°F (28°C), the system will go into the “full hot” mode. The system will remain at that maximum heating setting and the fan will blow at the speed to which the fan knob is set. If the fan is in AUTO, it will run at full speed.

(Full cold): If you turn the temperature knob past 66°F (19°C), the system will go into the “full cold” mode. The system will remain at that maximum cooling setting and the fan will blow at the speed to which the fan knob is set. If the fan is in AUTO, it will run at full speed.

Mode Knob - Manual Operation

The right knob on the control panel allows you to choose the direction of air delivery.

You can choose to set the climate control system operations manually, or let the system work automatically by turning the knob on the control panel to AUTO. See “Mode Knob -- Automatic Operation” later in this section.

(Vent): This setting directs most of the air through the instrument panel outlets and a small amount through the floor outlets.

(Bi-level): This setting directs air through the floor outlets as well as the instrument panel outlets.

(Floor): This setting directs most of the airflow through the floor outlets and some air through the windshield defroster outlets. Recirculation will not be available in this mode. See “Recirculation” following for more information.

(Blend): This setting divides airflow equally between the floor outlets and the windshield defroster outlets. The air conditioning compressor may run to dehumidify the air to prevent window fogging. Recirculation will not be available in this mode. See “Recirculation” following for more information.

(Defrost): This setting directs most air through the windshield defroster outlets and some through the floor outlets. The air conditioning compressor may run to dehumidify the air to prevent window fogging. Recirculation will not be available in this mode. See “Recirculation” following for more information.

Mode Buttons

(Outside air): Press this button, located under the fan knob, to use outside air. Using outside air will limit stale air odors and help to prevent excessively humid interior air (from wet boots or clothing or maximum passenger loads) from being redirected onto windows.

Pressing the outside air button will cancel the recirculation button.

(Recirculation): Press this button to limit the amount of outside air entering the vehicle to a very small amount. This setting helps limit odors entering the vehicle and will assist in reaching a comfortable temperature in very hot temperature conditions. Pressing recirculation will cause the system to recirculate interior air continuously and may cause the vehicle windows to fog if the passenger compartment floor is excessively wet.

A/C (Air Conditioning): Press this button to turn the air conditioning on and off. The system will cool and dehumidify the air inside the vehicle when the A/C light is on. When in AUTO, the A/C is automatically engaged when necessary.

Air conditioning will be automatically disabled when the outside temperature drops below a level at which air conditioning is effective.

Pressing the recirculation button will cancel outside air operation. To return to normal system operation and to prevent stale passenger compartment air, be sure to return to the outside air position.

To help reduce window fogging, recirculation will not be available in floor, blend or defrost modes. If the recirculation button is pressed in these modes, the LED indicator for recirculation will flash three times indicating that forced outside air is activated and recirculation is not available.

If the air conditioning system is activated and system demand is high in situations such as city traffic, idling, or very hot weather, the system will automatically switch from outside air to recirculation. The LED indicator will not change. After demand on the system is reduced, the system will return back to outside air.

Mode Knob - Automatic Operation

When the system is set in AUTO mode, sensors will control the air delivery mode. Air will come primarily from the floor or instrument panel outlets, with some air directed to the windshield to prevent fogging.

When the system is in AUTO mode, the air conditioning light will turn on, and the recirculation and outside air lights will turn off. With the system in full automatic control (both the fan and mode knobs in AUTO), you still have the ability to override any function. However, continually overriding the outside air or the A/C compressor will limit the ability of the system to cool the vehicle quickly.

If you push a button for a function which is not available, the light next to that button will flash three times to alert you that it's not available.

To find your comfort zone, start with the 74°F (23°C) setting and allow about 20 minutes for the system to adjust the temperature if necessary.

With the automatic setting, the air conditioning compressor automatically cycles when needed to cool the air. In cold weather, when the system senses the need for heat, the airflow will be directed out the floor outlets. As the interior temperature approaches a desired setting, the fan speed will decrease. To maintain interior comfort, the airflow will adjust between the instrument panel outlets and floor outlets. On bright sunny days in cool weather, the airflow may come out of the instrument panel and the floor outlets (bi-level mode) to maintain comfort and prevent stuffiness.

To avoid blowing cold air in cold weather, the system will delay turning on the fan until warm air is available. The length of delay depends on the outside air temperature, engine coolant temperature or the time since the engine was last started. As the coolant warms up, the fan speed will gradually increase and air will flow from the floor outlets, with some airflow to the windshield to prevent fogging under most normal conditions.

Be careful not to put anything over the solar sensor located near the center of the instrument panel. This sensor is used by the automatic system to regulate temperature.

Rear Air Conditioning and Rear Heater (With Sunroof)

Your vehicle has the rear air conditioning and rear heater system combination. Controls are provided to regulate the temperature, the air delivery location and the fan speed.

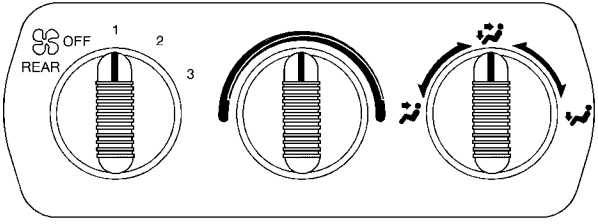

Front Control

To adjust the fan speed, turn the fan knob located on the left side to the desired setting.

To select the direction of airflow turn the right knob located on the control panel to the desired setting.

Generally, the upper vents are used for air conditioning and the floor vents for heating. The knob can be set to any blend setting.

To adjust the air temperature, turn the temperature knob on the center of the control panel to the desired setting.

For warmer air, turn the knob clockwise toward red. For cooler air, turn the knob counterclockwise toward blue.

Rear Air Conditioning and Heating Systems with Electronic Climate Control System (Without Sunroof)

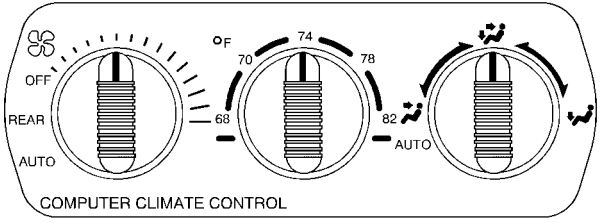

Front Control

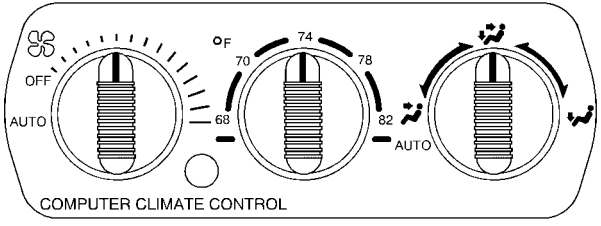

Rear Control

With this system the rear passengers can control the temperature of the air flow for the rear seating area. The climate control panels have three knobs.

To adjust the fan speed, turn the fan knob located on the left side of the control panel to the desired setting.

The system also has a front AUTO setting that can automatically change the temperature of the rear seating area based on information received from the front control panel. The OFF setting, located on the front climate control panel, also allows the driver to turn off the rear passenger seat controls from the front seat.

To adjust the air temperature, turn the temperature knob located on the center of the control panel clockwise toward 82°F (28°C) for warmer air and counterclockwise toward 66°F (19°C) for cooler air.

To direct the airflow, turn the right knob located on the control panel clockwise or counterclockwise to the desired mode. Generally, the upper vents are used for air conditioning and the floor vents for heating. The control knob can be set to any blend setting.

For rear control operation, use the above instructions.

Air Conditioning

On hot days, open the windows long enough to let hot air inside escape. This reduces the time it takes for your vehicle to cool down. Then keep your windows closed for the air conditioner to work its best.

The A/C button, located below the mode knob, allows the air coming into your vehicle to be cooled. This setting is useful for normal cooling on hot days.

Use A/C with recirculation on to allow the air inside your vehicle to be recirculated. This setting will help to maximize your air conditioner's performance and your vehicle's fuel economy. This setting also cools the air the fastest and can be used to keep unwanted odors and/or dust from entering the vehicle.

When using the air conditioner, turn off the recirculation setting and use the outside air setting after the vehicle reaches a comfortable interior temperature. When the right knob on the control panel is between floor and defrost, the recirculation feature will not function. This helps reduce window fogging.

Passenger Compartment Air Filter

Your vehicle is equipped with a passenger compartment air filter which filters outside air entering the vehicle. For information on replacing the filter see "Passenger Compartment Air Filter" in the Index.

Heating

The heater works best if you keep your windows closed while using it. On cold days, use the floor or bi-level (mode knob set between vent and floor) setting with the temperature knob in the red area.

On cold days, approximately 32°F (-0°C) or lower, you may experience differences in how the transmission shifts until the engine is warm. This feature automatically reduces the time it takes for the engine to reach normal operating temperature and shortens the time it takes the heater to reach full output.

If you use the engine coolant heater before starting your engine in cold weather, 20°F (-8°C) or lower, the heating system will produce warmer air faster to heat the passenger compartment.

The use of an engine coolant heater also reduces the time it takes for the engine to reach normal operating temperature. For more information, see "Engine Coolant Heater" in the Index.

Defogging and Defrosting

On cool, humid days, use defog to keep the windshield and side windows clear. Use defrost to remove fog or ice from the windshield in extremely humid or cold conditions. Use defrost with the temperature knob toward the red area and the fan knob turned all the way clockwise.

Rear Window Defogger

The lines running across the rear window are the defogger grid. The lines warm the glass.

To turn on the rear window defogger, press this button located below the mode knob.

The rear window defogger will only work if the ignition is in RUN. For best results, clear the window of as much snow or ice as possible first.

The defogger will shut itself off after several minutes. If you need additional warming time, press the button again. You can turn the defogger off at any time by pressing the button.

Your vehicle is equipped with heated outside mirrors. The rear window defogger button will also activate the heated outside mirrors.

Do not attach a temporary vehicle license, tape or decals across the defogger grid on the rear window.

NOTICE:

Don’t use a razor blade or something else sharp on the inside of the rear window. If you do, you could cut or damage the warming grid, and the repairs wouldn’t be covered by your warranty.

Ventilation System

Your vehicle has air outlets in the center and on the sides of the instrument panel. There are also two outlets located on the back of the center console for the rear seat passengers.

You can move the outlets from side-to-side and the louvers up and down to direct the flow of air. The driver's and passenger's side outlets can be closed. The two outlets, located on the rear of the center console, can also be closed. Turn the thumbwheel to the left to shut off air flow or to the right to allow air flow. When you close an outlet, it will increase the flow of air coming out of any outlets that are open. The center outlet, located on the instrument panel, does not completely shut off airflow.

For mild outside temperatures when little heating or cooling is needed, use outside air to direct outside air through your vehicle. Air will flow through the instrument panel outlets.

Your vehicle's ventilation system supplies outside air to the inside of your vehicle when it is moving. With the side windows closed, air will flow into the front air inlet grilles, through the vehicle, and out the air exhaust valves.

Outside air will also enter the vehicle when the heater or the air conditioning fan is running, unless you have the recirculation button pushed in. For more information on the recirculation button, see "Air Conditioning" earlier in this section.

Ventilation Tips

- Keep the hood and front air inlet free of ice, snow or any other obstruction (such as leaves). The heater and defroster will work far better, reducing the chance of fogging the inside of your windows.
- When you enter a vehicle in cold weather, turn the fan knob all the way to the right for a few moments before driving. This helps clear the intake ducts of snow and moisture, and reduces the chance of fogging the inside of your windows.
- Keep the air path under the front seats clear of objects. This helps air to circulate throughout your vehicle.
- The use of non-GM approved hood air deflectors may adversely affect the performance of the heating and air conditioning system.

Audio Systems

Your audio system has been designed to operate easily and give years of listening pleasure. You will get the most enjoyment out of it if you acquaint yourself with it first. Find out what your audio system can do and how to operate all of its controls to be sure you're getting the most out of the advanced engineering that went into it.

Your vehicle has a feature called Retained Accessory Power (RAP). With RAP, you can play your audio system even after the ignition is turned off. See "Retained Accessory Power" in the Index.

Setting the Clock

Press and hold HR until the correct hour appears on the display. Press and hold MN until the correct minute appears on the display. To display the clock with the ignition off, press RECALL or HR/MN and the time will be displayed for a few seconds. There is an initial two-second delay before the clock goes into the time-set mode.

AM-FM Stereo with Cassette Tape Player (Bose®)

Included with this audio system are ten Bose® speakers, an Acoustimass® bass module and a seven channel Bose amplifier. See your dealer for details.

Playing the Radio

PWR (Power): Press this knob to turn the system on and off.

VOL (Volume): Turn this knob clockwise to increase volume. Turn it counterclockwise to decrease volume. The knob is capable of being turned continuously.

REAR DSPL (Display): When the main radio is turned on, press this button to see the rear seat audio settings displayed on the main radio. Press it again to turn the rear seat audio display off. See “Rear Seat Audio” in the Index for more information.

RECALL: Press this button to display the station being played or to display the clock. Clock display is available with the ignition turned off.

SCV (Speed-Compensated Volume): With SCV, your audio system adjusts automatically to make up for road and wind noise as you drive. Set the volume at the desired level. Turn the control ring behind the upper knob clockwise to adjust the SCV. Each notch on the control ring allows for more volume compensation at faster vehicle speeds. Then, as you drive, SCV automatically increases the volume, as necessary, to overcome noise at any speed. The volume level should always sound the same to you as you drive. If you don’t want to use SCV, turn the control ring counterclockwise.

Finding a Station

AM FM: Press this button to switch between AM, FM1 and FM2. The display will show your selection.

TUNE: Press this knob lightly so it extends. Turn it to choose radio stations. Push the knob back into its stored position when you're not using it.

◁ SEEK ▷: Press the right or left arrow to seek to the next or previous station and stay there. The sound will mute while seeking.

To scan stations, press and hold either SEEK arrow for two seconds until SCAN appears on the display. The radio will scan to a station, play for a few seconds, then go on to the next station. Press either SEEK arrow again to stop scanning. The radio will scan to stations with a strong signal only. The sound will mute while scanning.

P.SCAN (Preset Scan): The preset scan button lets you scan through your favorite stations stored on your pushbuttons. Select either the AM, FM1 or FM2 mode and then press P.SCAN. It will scan through each station stored on your pushbuttons and stop for a few seconds before continuing to scan through all of the pushbuttons.

Press P.SCAN again or one of the pushbuttons to stop scanning and listen to a specific preset station. P.SCAN will light up on the display while in this mode. If one of the stations stored on a pushbutton is too weak for the location you are in, the radio display will show the channel number (P1 through P6) for several seconds before advancing to the next preset station.

Setting Preset Stations

The six numbered pushbuttons let you return to your favorite stations. You can set up to 18 stations (six AM, six FM1 and six FM2) by performing the following steps:

1. Turn the radio on.
2. Press AM FM to select AM, FM1 or FM2.
3. Tune in the desired station.
4. Press and hold one of the six pushbuttons. The sound will mute. When it returns, release the pushbutton. Whenever you press that numbered pushbutton, the station you set will return.
5. Repeat the steps for each pushbutton.

Setting the Tone (Bass/Treble)

BASS: Press this knob lightly so it extends. Turn the knob clockwise to increase bass and counterclockwise to decrease bass.

TREB (Treble): Press this knob lightly so it extends. Turn the knob clockwise to increase treble and counterclockwise to decrease treble. If a station is weak or noisy, you may want to decrease the treble.

Push these knobs back into their stored positions when you're not using them.

Adjusting the Speakers (Balance/Fade)

BAL (Balance): Press this knob lightly so it extends. Turn the knob clockwise to adjust sound to the right speakers and counterclockwise to adjust sound to the left speakers. The middle position balances the sound between the speakers.

FADE: Press this knob lightly so it extends. Turn the knob clockwise to adjust the sound to the front speakers and counterclockwise for the rear speakers. The middle position balances the sound between the speakers.

Push these knobs back into their stored positions when you're not using them.

Playing a Cassette Tape

Your tape player is built to work best with tapes that are up to 30 to 45 minutes long on each side. Tapes longer than that are so thin they may not work well in this player.

To load a cassette tape with the ignition off, press EJECT or RECALL. Then, insert the cassette tape. If the ignition is on but the radio is off, the tape will begin playing.

Once the tape is playing, use the VOL, BAL, FADE, BASS and TREB controls just as you do for the radio. The tape symbol and a direction arrow will be on the display whenever a tape is being played. Anytime a tape is inserted, the top side is selected for play first.

The player automatically senses if the cassette tape is metal or CrO_2 and adjusts for best playback sound.

If an error appears on the display, see "Cassette Tape Messages" later in this section.

1 PREV (Previous): Press this pushbutton or the left SEEK arrow to search for the previous selection. A minimum three-second blank gap is required for the player to stop at the beginning of the selection. The tape direction arrow will blink while in previous mode.

2 PROG (Program): Press this pushbutton to switch from one side of the tape to the other.

3 NEXT: Press this pushbutton or the right SEEK arrow to search for the next selection. A minimum three-second blank gap is required for the player to stop at the beginning of the selection. The tape direction arrow will blink while in next mode. The sound will mute while searching for the next selection.

REV 4 (Reverse): Press this pushbutton to rapidly reverse the tape. Press this pushbutton again to stop reversing the tape. The radio will play the last selected station while reversing the tape. The tape direction arrow will blink while in reverse mode.

DD 5 (Dolby): Press this pushbutton to reduce cassette tape noise. The double-D symbol will appear on the display while the player is in this mode.

Dolby Noise Reduction is manufactured under a license from Dolby Laboratories Licensing Corporation. Dolby and the double-D symbol are trademarks of Dolby Laboratories Licensing Corporation.

FWD 6 (Forward): Press this pushbutton to rapidly forward the tape. Press this pushbutton again to stop forwarding the tape. The radio will play the last selected station while forwarding the tape. The tape direction arrow will blink while in forward mode.

AM FM: Press this button to listen to the radio when playing a tape or CD.

CD TAPE: Press this button to play a tape when listening to the radio. Press this button to switch between the tape player and CD changer if all are loaded. When a tape is playing, a lighted arrow will appear on the display and show the direction of play. (If the radio is turned off, the tape stays in the player and will resume playing at the point where it stopped.)

EJECT: Press this button to stop a tape when it is playing or to eject a tape when it is not playing. Eject may be activated with the radio off. Cassette tapes may be loaded with the radio and vehicle off if this button is pressed first.

Cassette Tape Messages

CLN (Clean): If this message appears on the display, the cassette tape player needs to be cleaned. It will still play tapes, but you should clean it as soon as possible to prevent damage to the tapes and player. See “Care of Your Cassette Tape Player” in the Index.

CD Adapter Kits

It is possible to use a portable CD player adapter kit with your cassette tape player after activating the bypass feature on your tape player.

To activate the bypass feature, use the following steps:

1. Turn the ignition to RUN or ACCESSORY.
2. Turn the radio off.
3. Press and hold the CD TAPE button for five seconds. The tape symbol on the display will flash for two seconds, indicating the feature is active.
4. Insert the adapter into the cassette slot. It will power up the radio and begin playing.

This override routine will remain active until EJECT is pressed.

Rear Seat Audio (RSA)

This feature allows rear seat passengers to listen to and control any of the music sources (AM-FM, cassette tapes and CDs) through the Rear Seat Audio (RSA) controller. However, the rear seat passengers can only control the music sources that the front seat passengers are not listening to. For example, rear seat passengers may listen to a cassette tape through headphones while the driver listens to the radio through the front speakers. The rear seat passengers have control of the volume for each set of headphones. Be aware that the front seat audio controls always have priority over the RSA controls. If the front seat passengers switch the source for the main radio to a remote source, the RSA will play the same remote source. The rear speakers will be muted when the RSA power is turned on. You may operate the RSA functions even when the main radio is off.

Primary Radio Controls

The following function is controlled by the knob on the main radio:

PWR (Power): Push this knob twice to turn RSA off.

Rear Seat Audio Controls

The following functions are controlled by the RSA system buttons:

PWR (Power): Press this button to turn the rear seat audio system on or off. The rear speakers will be muted when the power is turned on. You will hear your source through headphones. You may operate the rear seat audio functions even when the primary radio power is off.

VOL (Volume): Press this knob lightly so it extends. Turn the knob clockwise to increase volume and counterclockwise to decrease volume. Push the knob back into its stored position when you're not using it. The upper knob controls the headphone plugged into the upper jack and the lower knob controls the headphone plugged into the lower jack.

AM FM: Press this button to switch between AM, FM1 and FM2. If the front passengers are already listening to AM FM, the RSA controller will not switch between the bands and cannot change the frequency.

Press AM FM to return to listening to the radio when a cassette tape or CD is playing. The inactive tape or CD will remain safely inside the radio for future listening.

△SEEK▽: While listening to AM, FM1 or FM2, press the up arrow to tune to the next station and stay there. Press the down arrow to tune to the previous station and stay there. The sound will mute while seeking. If the front radio is in use, you cannot seek through different stations.

While listening to a cassette tape, press the up arrow to hear the next selection on the tape. Press the down arrow to go back to the previous selection. If the cassette tape on the front radio is in use, you cannot seek through different selections on a tape.

While listening to a CD, press the up arrow to hear the next track on the CD. Press the down arrow to go back to the start of the current track (if more than eight seconds have played). If the CD player on the front radio is in use, you cannot seek through different tracks.

To scan preset stations, press and hold SEEK until the radio goes into scan mode. The radio will go to a station, play for a few seconds, then go on to the next station. Press either SEEK arrow again to stop scanning. If the front radio is in use, you cannot scan through different stations.

P.SET PROG (Preset Program): The front passengers must be listening to something different for each of these functions to work:

- Press this button to scan through the preset radio stations set on the pushbuttons on the main radio. The radio will go to a preset station, play for a few seconds, then go on to the next preset station. Press this button again to stop scanning.
- When a cassette tape is playing, press this button to go to the other side of the tape.
- When a CD is playing in the CD changer, press this button to select a disc.

CD TAPE: Press this button to switch between playing a tape and CD changer if both are loaded. Press AM FM to return to the radio when a cassette tape or CD is playing. The inactive tape or CD will remain safely inside the radio for future listening.

Compact Disc Changer

The compact disc changer plays up to six standard size CDs continuously. Individual CDs may be loaded into or ejected from any position.

A green light on each numbered button indicates a CD is loaded in the respective position. An amber light on a numbered button indicates that a CD is playing. When loading CDs, the loading slot indicators turn amber to indicate that the player is ready to accept a CD. CDs can be loaded or ejected with the radio or the ignition being on or off.

You must load CDs with the label side up. If you do not, the player will automatically eject the CDs.

NOTICE:

Loading CDs with adhesive labels will damage the player.

To load a CD perform the following steps:

1. Press the LOAD button. Available positions will blink amber.
2. Select a position by pressing the desired numbered button with an amber blinking light. If a button is not pressed within five seconds, the changer will go to the lowest available position.
3. Load the CD when the loading slot indicators turn amber. An internal door will open allowing a single CD to be inserted into the changer. After approximately ten seconds the changer will be ready to play.

To load two or more CDs perform the following steps:

1. Press and hold the LOAD button. The first CD will be loaded into the lowest numbered empty position.
2. Load a single CD when the loading slot indicators turn amber. After about ten seconds the changer will cycle to the next available position.
3. Repeat Step 2 until all CDs are loaded into all of the desired positions. If you do not wish to load all of the positions, you can cancel the load all function by pressing a button with a green flashing indicator light or wait 20 seconds for the changer to time out.

To eject a single CD perform the following steps:

1. Press the eject button (upward pointing arrow). The buttons with loaded CDs will blink amber.
2. Press one of the amber blinking buttons to select the location of the CD you want to eject. The changer will move to that location and eject the CD. If you do not remove the CD from the player within ten seconds, it will be reloaded. If the eject button is pressed and a numbered location button is not pressed within five seconds, the current or last played CD will be ejected.

To eject all CDs, press and hold the eject button.

There are two ways to play a CD. Perform one of the following:

- Press the desired numbered button with a green indicator light on the CD changer.
- Press the CD TAPE button on the radio. The CD changer will go to its last played position.

1 PREV (Previous): Press this pushbutton to go to the previous track if the current track has been playing for less than eight seconds. If this pushbutton is pressed and the current track has been playing for more than eight seconds, it will go to the beginning of the current track. If you hold or press this pushbutton more than once, the player will continue moving back through the CD. The sound will mute while seeking.

2 PROG (Program): Press this pushbutton to select a CD. The CD number and track number will be displayed.

3 NEXT: Press this pushbutton to go to the next track. If you hold this pushbutton or press it more than once, the player will continue moving forward through the CD. The sound will mute while seeking.

REV 4 (Reverse): Press and hold this pushbutton to reverse quickly through a track. Release it to resume playing.

FWD 6 (Forward): Press and hold this pushbutton to advance quickly through a track. Release it to resume playing.

◁ SEEK ▷: Press the right SEEK arrow to go to the next track on the CD. Press the left SEEK arrow to go to the previous track on the CD. The sound will mute while seeking.

P.SCAN (Preset Scan): Press this button to hear the tracks in random, rather than sequential, order. DSC will appear on the radio display, which will randomly play the tracks on the current CD. Press this button again to make the radio display ALL, which will randomly play all of the loaded CDs. Press this button again to turn off random play, OFF will appear on the radio display.

AM FM: Press AM FM to listen to the radio when a CD is playing.

CD TAPE: Press this button if you have a CD loaded in the changer and the radio is turned on, to play a CD. Press this button to switch between playing a tape and the CD changer if all are loaded.

Compact Disc Changer Errors

ERR (Error): If this message appears on the display, it could be for one of the following reasons:

- You are driving on a very rough road. (The CD should play when the road gets smoother.)
- A CD is upside down.
- It is dirty, scratched or wet.
- It is very humid. (If so, wait about an hour and try again.)
- The CD player is very hot.

Press RECALL to make ERR turn off the display.

If any error occurs repeatedly or if an error cannot be corrected, contact your dealer.

Theft-Deterrent Feature

THEFTLOCK® is designed to discourage theft of your radio. It works by using a secret code to disable all radio functions whenever battery power is removed.

The THEFTLOCK feature for the radio may be used or ignored. If ignored, the system plays normally and the radio is not protected by the feature. If THEFTLOCK is activated, your radio will not operate if stolen.

When THEFTLOCK is activated, the radio will display LOC to indicate a locked condition anytime battery power has been interrupted. If your battery loses power for any reason, you must unlock the radio with the secret code before it will operate.

Activating the Theft-Deterrent Feature

The instructions which follow explain how to enter your secret code to activate the THEFTLOCK system. It is recommended that you read through all nine steps before starting the procedure.

If you allow more than 15 seconds to elapse between any steps, the radio automatically reverts to time and you must start the procedure over at Step 4.

1. Write down any three or four-digit number from 000 to 1999 and keep it in a safe place separate from the vehicle.
2. Turn the ignition to ACCESSORY or RUN.
3. Turn the radio off.
4. Press the 1 and 4 pushbuttons at the same time. Hold them down until --- shows on the display. Next you will use the secret code number which you have written down.
5. Press MN and 000 will appear on the display.
6. Press MN again to make the last two digits agree with your code.
7. Press HR to make the first one or two digits agree with your code.
8. Press AM FM after you have confirmed that the code matches the secret code you have written down. The display will show REP to let you know that you need to repeat Steps 5 through 7 to confirm your secret code.
9. Press AM FM and this time the display will show SEC to let you know that your radio is secure. The LED indicator by the volume knob will begin flashing when the ignition is turned off.

Unlocking the Theft-Deterrent Feature After a Power Loss

Enter your secret code as follows; pause no more than 15 seconds between steps:

1. Turn the ignition on. LOC will appear on the display.
2. Press MN and 000 will appear on the display.
3. Press MN again to make the last two digits agree with your code.
4. Press HR to make the first one or two digits agree with your code.
5. Press AM FM after you have confirmed that the code matches the secret code you have written down. The display will show SEC, indicating the radio is now operable and secure.

If you enter the wrong code eight times, INOP will appear on the display. You will have to wait an hour with the ignition on before you can try again. When you try again, you will only have three chances to enter the correct code before INOP appears.

If you lose or forget your code, contact your dealer.

Disabling the Theft-Deterrent Feature

Enter your secret code as follows; pause no more than 15 seconds between steps:

1. Turn the ignition to ACCESSORY or RUN.
2. Turn the radio off.
3. Press the 1 and 4 pushbuttons at the same time. Hold them down until SEC shows on the display.
4. Press MN and 000 will appear on the display.
5. Press MN again to make the last two digits agree with your code.
6. Press HR to make the first one or two digits agree with your code.
7. Press AM FM after you have confirmed that the code matches the secret code you have written down. The display will show ---, indicating that the radio is no longer secured.

If the code entered is incorrect, SEC will appear on the display. The radio will remain secured until the correct code is entered.

When battery power is removed and later applied to a secured radio, the radio won’t turn on and LOC will appear on the display.

To unlock a secured radio, see “Unlocking the Theft-Deterrent Feature After a Power Loss” earlier in this section.

Audio Steering Wheel Controls

You can control certain radio functions using the buttons on your steering wheel.

PROG (Program): Press this button to play a station you have programmed on the radio preset buttons on the selected band. If a cassette tape is playing, press this button to play the other side of the tape. If a compact disc is playing in the CD changer, press this button to go to the next available CD.

△ **SEEK** ▽**:** Press the up or down arrow to seek to the next or previous radio station and stay there.

If a cassette tape or compact disc is playing, the player will advance with the up arrow and reverse with the down arrow.

MUTE: Press this button to silence the system. Press it again to turn on the sound.

△ **VOL** ▽ **(Volume):** Press the up or down arrow to increase or decrease volume.

Understanding Radio Reception

AM

The range for most AM stations is greater than for FM, especially at night. The longer range, however, can cause stations to interfere with each other. AM can pick up noise from things like storms and power lines. Try reducing the treble to reduce this noise if you ever get it.

FM Stereo

FM stereo will give you the best sound, but FM signals will reach only about 10 to 40 miles (16 to 65 km). Tall buildings or hills can interfere with FM signals, causing the sound to come and go.

Tips About Your Audio System

Hearing damage from loud noise is almost undetectable until it is too late. Your hearing can adapt to higher volumes of sound. Sound that seems normal can be loud and harmful to your hearing. Take precautions by adjusting the volume control on your radio to a safe sound level before your hearing adapts to it.

To help avoid hearing loss or damage do the following:

1. Adjust the volume control to the lowest setting.
2. Increase volume slowly until you hear comfortably and clearly.

NOTICE:

Before you add any sound equipment to your vehicle -- like a tape player, CB radio, mobile telephone or two-way radio -- be sure you can add what you want. If you can, it's very important to do it properly. Added sound equipment may interfere with the operation of your vehicle's engine, Delphi Electronics radio or other systems, and even damage them. Your vehicle's systems may interfere with the operation of sound equipment that has been added improperly.

So, before adding sound equipment, check with your dealer and be sure to check federal rules covering mobile radio and telephone units.

Care of Your Cassette Tape Player

A tape player that is not cleaned regularly can cause reduced sound quality, ruined cassettes or a damaged mechanism. Cassette tapes should be stored in their cases away from contaminants, direct sunlight and extreme heat. If they aren't, they may not operate properly or may cause failure of the tape player.

Your tape player should be cleaned regularly after every 50 hours of use. Your radio may display CLN to indicate that you have used your tape player for 50 hours without resetting the tape clean timer. If this message appears on the display, your cassette tape player needs to be cleaned. It will still play tapes, but you should clean it as soon as possible to prevent damage to your tapes and player. If you notice a reduction in sound quality, try a known good cassette to see if it is the tape or the tape player at fault. If this other cassette has no improvement in sound quality, clean the tape player.

The recommended cleaning method for your cassette tape player is the use of a scrubbing action, non-abrasive cleaning cassette with pads which scrub the tape head as the hubs of the cleaner cassette turn. The recommended cleaning cassette is available through your dealer (GM Part No. 12344789).

When cleaning the cassette tape player with the recommended non-abrasive cleaning cassette, it is possible that the cassette may eject, because the cut tape detection feature on your radio may recognize it as a broken tape. To prevent the cleaning cassette from being ejected, use the following steps:

1. Turn the ignition to RUN or ACCESSORY.
2. Turn the radio off.
3. Press and hold the CD TAPE button for five seconds. The tape symbol on the display will flash for two seconds.
4. Insert the scrubbing action cleaning cassette.
5. Eject the cleaning cassette after the manufacturer's recommended cleaning time.

When the cleaning cassette has been ejected, the cut tape detection feature is active again.

You may also choose a non-scrubbing action, wet-type cleaner which uses a cassette with a fabric belt to clean the tape head. This type of cleaning cassette will not eject on its own. A non-scrubbing action cleaner may not clean as thoroughly as the scrubbing type cleaner. The use of a non-scrubbing action, dry-type cleaning cassette is not recommended.

After you clean the player, press and hold the EJECT button for five seconds to reset the CLN indicator. The radio will display --- to show the indicator was reset.

Cassettes are subject to wear and the sound quality may degrade over time. Always make sure the cassette tape is in good condition before you have your tape player serviced.

Care of Your Compact Discs

Handle discs carefully. Store them in their original cases or other protective cases and away from direct sunlight and dust. If the surface of a disc is soiled, dampen a clean, soft cloth in a mild, neutral detergent solution and clean it, wiping from the center to the edge.

Be sure never to touch the signal surface when handling discs. Pick up discs by grasping the outer edges or the edge of the hole and the outer edge.

Care of Your Compact Disc Player

The use of CD lens cleaner discs is not advised, due to the risk of contaminating the lens of the CD optics with lubricants internal to the CD mechanism.

Fixed Mast Antenna

The fixed mast antenna can withstand most car washes without being damaged. If the mast should ever become slightly bent, you can straighten it out by hand. If the mast is badly bent, as it might be by vandals, you should replace it.

Check every once in a while to be sure the mast is still tightened to the cowl. If tightening is required, tighten by hand, then with a wrench one quarter turn.

Section 4 Your Driving and the Road

Here you'll find information about driving on different kinds of roads and in varying weather conditions. We've also included many other useful tips on driving.

4-2 Defensive Driving
4-3 Drunken Driving
4-6 Control of a Vehicle
4-6 Braking
4-9 Steering
4-11 Off-Road Recovery
4-12 Passing
4-13 Loss of Control
4-14 Operating Your All–Wheel–Drive Vehicle Off Paved Roads
4-28 Driving at Night
4-29 Driving in Rain and on Wet Roads
4-32 City Driving
4-33 Freeway Driving
4-34 Before Leaving on a Long Trip
4-35 Highway Hypnosis
4-35 Hill and Mountain Roads
4-37 Winter Driving
4-41 Recreational Vehicle Towing
4-42 Loading Your Vehicle
4-45 Towing a Trailer

Defensive Driving

The best advice anyone can give about driving is: Drive defensively.

Please start with a very important safety device in your vehicle: Buckle up. See “Safety Belts” in the Index.

Defensive driving really means “be ready for anything.” On city streets, rural roads or freeways, it means “always expect the unexpected.”

Assume that pedestrians or other drivers are going to be careless and make mistakes. Anticipate what they might do. Be ready for their mistakes.

Rear-end collisions are about the most preventable of accidents. Yet they are common. Allow enough following distance. It’s the best defensive driving maneuver, in both city and rural driving. You never know when the vehicle in front of you is going to brake or turn suddenly.

Defensive driving requires that a driver concentrate on the driving task. Anything that distracts from the driving task -- such as concentrating on a cellular telephone call, reading, or reaching for something on the floor -- makes proper defensive driving more difficult and can even cause a collision, with resulting injury. Ask a passenger to help do things like this, or pull off the road in a safe place to do them yourself. These simple defensive driving techniques could save your life.

Drunken Driving

Death and injury associated with drinking and driving is a national tragedy. It's the number one contributor to the highway death toll, claiming thousands of victims every year.

Alcohol affects four things that anyone needs to drive a vehicle:

- Judgment
- Muscular Coordination
- Vision
- Attentiveness.

Police records show that almost half of all motor vehicle-related deaths involve alcohol. In most cases, these deaths are the result of someone who was drinking and driving. In recent years, about 16,000 annual motor vehicle-related deaths have been associated with the use of alcohol, with more than 300,000 people injured.

Many adults -- by some estimates, nearly half the adult population -- choose never to drink alcohol, so they never drive after drinking. For persons under 21, it's against the law in every U.S. state to drink alcohol. There are good medical, psychological and developmental reasons for these laws.

The obvious way to solve the leading highway safety problem is for people never to drink alcohol and then drive. But what if people do? How much is "too much" if the driver plans to drive? It's a lot less than many might think. Although it depends on each person and situation, here is some general information on the problem.

The Blood Alcohol Concentration (BAC) of someone who is drinking depends upon four things:

- The amount of alcohol consumed
- The drinker's body weight
- The amount of food that is consumed before and during drinking
- The length of time it has taken the drinker to consume the alcohol.

According to the American Medical Association, a 180-lb. (82 kg) person who drinks three 12-ounce (355 ml) bottles of beer in an hour will end up with a BAC of about 0.06 percent. The person would reach the same BAC by drinking three 4-ounce (120 ml) glasses of wine or three mixed drinks if each had 1-1/2 ounces (45 ml) of a liquor like whiskey, gin or vodka.

It’s the amount of alcohol that counts. For example, if the same person drank three double martinis (3 ounces or 90 ml of liquor each) within an hour, the person’s BAC would be close to 0.12 percent. A person who consumes food just before or during drinking will have a somewhat lower BAC level.

There is a gender difference, too. Women generally have a lower relative percentage of body water than men. Since alcohol is carried in body water, this means that a woman generally will reach a higher BAC level than a man of her same body weight when each has the same number of drinks.

The law in an increasing number of U.S. states, and throughout Canada, sets the legal limit at 0.08 percent. In some other countries, the limit is even lower. For example, it is 0.05 percent in both France and Germany. The BAC limit for all commercial drivers in the United States is 0.04 percent.

The BAC will be over 0.10 percent after three to six drinks (in one hour). Of course, as we’ve seen, it depends on how much alcohol is in the drinks, and how quickly the person drinks them.

But the ability to drive is affected well below a BAC of 0.10 percent. Research shows that the driving skills of many people are impaired at a BAC approaching 0.05 percent, and that the effects are worse at night. All drivers are impaired at BAC levels above 0.05 percent. Statistics show that the chance of being in a collision increases sharply for drivers who have a BAC of 0.05 percent or above. A driver with a BAC level of 0.06 percent has doubled his or her chance of having a collision. At a BAC level of 0.10 percent, the chance of this driver having a collision is 12 times greater; at a level of 0.15 percent, the chance is 25 times greater!

The body takes about an hour to rid itself of the alcohol in one drink. No amount of coffee or number of cold showers will speed that up. “I’ll be careful” isn’t the right answer. What if there’s an emergency, a need to take sudden action, as when a child darts into the street? A person with even a moderate BAC might not be able to react quickly enough to avoid the collision.

There’s something else about drinking and driving that many people don’t know. Medical research shows that alcohol in a person’s system can make crash injuries worse, especially injuries to the brain, spinal cord or heart. This means that when anyone who has been drinking -- driver or passenger -- is in a crash, that person’s chance of being killed or permanently disabled is higher than if the person had not been drinking.

⚠ CAUTION:

Drinking and then driving is very dangerous. Your reflexes, perceptions, attentiveness and judgment can be affected by even a small amount of alcohol. You can have a serious -- or even fatal -- collision if you drive after drinking. Please don’t drink and drive or ride with a driver who has been drinking. Ride home in a cab; or if you’re with a group, designate a driver who will not drink.

Control of a Vehicle

You have three systems that make your vehicle go where you want it to go. They are the brakes, the steering and the accelerator. All three systems have to do their work at the places where the tires meet the road.

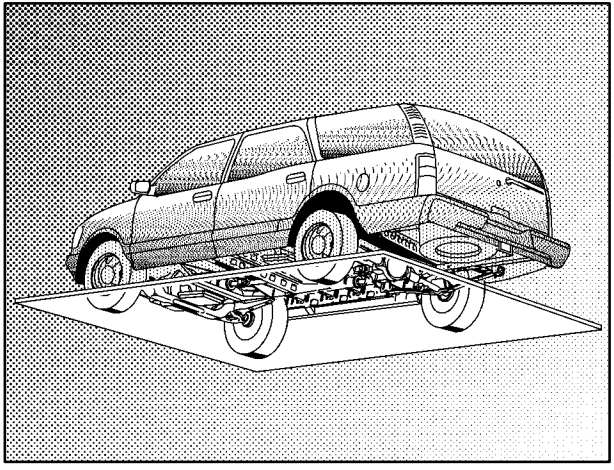

Sometimes, as when you're driving on snow or ice, it's easy to ask more of those control systems than the tires and road can provide. That means you can lose control of your vehicle.

Braking

Braking action involves *perception time* and *reaction time.*

First, you have to decide to push on the brake pedal. That's *perception time.* Then you have to bring up your foot and do it. That's *reaction time.*

Average *reaction time* is about 3/4 of a second. But that's only an average. It might be less with one driver and as long as two or three seconds or more with another. Age, physical condition, alertness, coordination and eyesight all play a part. So do alcohol, drugs and frustration. But even in 3/4 of a second, a vehicle moving at 60 mph (100 km/h) travels 66 feet (20 m). That could be a lot of distance in an emergency, so keeping enough space between your vehicle and others is important.

And, of course, actual stopping distances vary greatly with the surface of the road (whether it's pavement or gravel); the condition of the road (wet, dry, icy); tire tread; the condition of your brakes; the weight of the vehicle and the amount of brake force applied.

Avoid needless heavy braking. Some people drive in spurts -- heavy acceleration followed by heavy braking -- rather than keeping pace with traffic. This is a mistake. Your brakes may not have time to cool between hard stops. Your brakes will wear out much faster if you do a lot of heavy braking. If you keep pace with the traffic and allow realistic following distances, you will eliminate a lot of unnecessary braking. That means better braking and longer brake life.

If your engine ever stops while you're driving, brake normally but don't pump your brakes. If you do, the pedal may get harder to push down. If your engine stops, you will still have some power brake assist. But you will use it when you brake. Once the power assist is used up, it may take longer to stop and the brake pedal will be harder to push.

Anti-Lock Brake System (ABS)

Your vehicle has anti-lock brakes. ABS is an advanced electronic braking system that will help prevent a braking skid.

When you start your engine and begin to drive away, your anti-lock brake system will check itself. You may hear a momentary motor or clicking noise while this test is going on. This is normal.

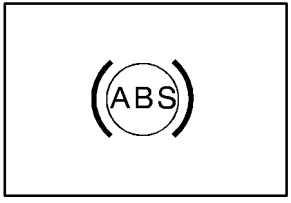

If there's a problem with the anti-lock brake system, this warning light will stay on. See "Anti-Lock Brake System Warning Light" in the Index.

Let's say the road is wet and you're driving safely. Suddenly, an animal jumps out in front of you. You slam on the brakes and continue braking. Here's what happens with ABS:

A computer senses that wheels are slowing down. If one of the wheels is about to stop rolling, the computer will separately work the brakes at each front wheel and at both rear wheels.

The anti-lock system can change the brake pressure faster than any driver could. The computer is programmed to make the most of available tire and road conditions. This can help you steer around the obstacle while braking hard.

As you brake, your computer keeps receiving updates on wheel speed and controls braking pressure accordingly.

Remember: Anti-lock doesn't change the time you need to get your foot up to the brake pedal or always decrease stopping distance. If you get too close to the vehicle in front of you, you won't have time to apply your brakes if that vehicle suddenly slows or stops. Always leave enough room up ahead to stop, even though you have anti-lock brakes.

Using Anti-Lock

Don't pump the brakes. Just hold the brake pedal down firmly and let anti-lock work for you. You may feel the brakes vibrate, or you may notice some noise, but this is normal.

Braking in Emergencies

With anti-lock, you can steer and brake at the same time. In many emergencies, steering can help you more than even the very best braking.

Steering

Power Steering

If you lose power steering assist because the engine stops or the system is not functioning, you can steer but it will take much more effort.

Speed-Sensitive Steering

This system varies the amount of steering effort proportionate to your vehicle speed. Steering is easier at lower speeds for maneuvering and parking ease. As your vehicle speed increases, the steering effort also increases. At highway speeds, the amount of steering effort is increased.

Steering Tips

Driving on Curves

It's important to take curves at a reasonable speed.

A lot of the "driver lost control" accidents mentioned on the news happen on curves. Here's why:

Experienced driver or beginner, each of us is subject to the same laws of physics when driving on curves. The traction of the tires against the road surface makes it possible for the vehicle to change its path when you turn the front wheels. If there's no traction, inertia will keep the vehicle going in the same direction. If you've ever tried to steer a vehicle on wet ice, you'll understand this.

The traction you can get in a curve depends on the condition of your tires and the road surface, the angle at which the curve is banked, and your speed. While you're in a curve, speed is the one factor you can control.

Suppose you're steering through a sharp curve. Then you suddenly accelerate. Both control systems -- steering and acceleration -- have to do their work where the tires meet the road. Adding the sudden acceleration can demand too much of those places. You can lose control.

What should you do if this ever happens? Ease up on the accelerator pedal, steer the vehicle the way you want it to go, and slow down.

Speed limit signs near curves warn that you should adjust your speed. Of course, the posted speeds are based on good weather and road conditions. Under less favorable conditions you'll want to go slower.

If you need to reduce your speed as you approach a curve, do it before you enter the curve, while your front wheels are straight ahead.

Try to adjust your speed so you can "drive" through the curve. Maintain a reasonable, steady speed. Wait to accelerate until you are out of the curve, and then accelerate gently into the straightaway.

Steering in Emergencies

There are times when steering can be more effective than braking. For example, you come over a hill and find a truck stopped in your lane, or a car suddenly pulls out from nowhere, or a child darts out from between parked cars and stops right in front of you. You can avoid these problems by braking -- if you can stop in time. But sometimes you can't; there isn't room. That's the time for evasive action -- steering around the problem.

Your vehicle can perform very well in emergencies like these. First apply your brakes. See "Braking in Emergencies" earlier in this section. It is better to remove as much speed as you can from a possible collision. Then steer around the problem, to the left or right depending on the space available.

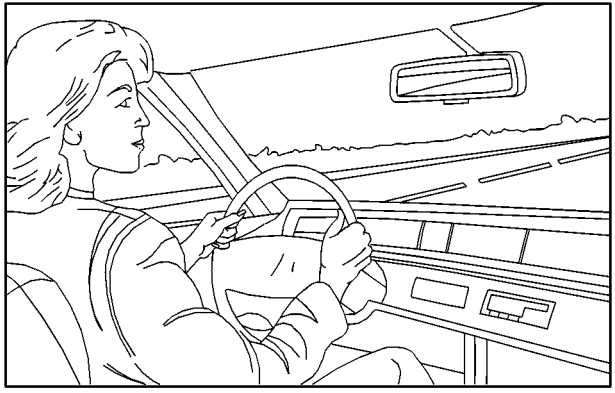

An emergency like this requires close attention and a quick decision. If you are holding the steering wheel at the recommended 9 and 3 o'clock positions, you can turn it a full 180 degrees very quickly without removing either hand. But you have to act fast, steer quickly, and just as quickly straighten the wheel once you have avoided the object.

The fact that such emergency situations are always possible is a good reason to practice defensive driving at all times and wear safety belts properly.

Off-Road Recovery

You may find that your right wheels have dropped off the edge of a road onto the shoulder while you're driving.

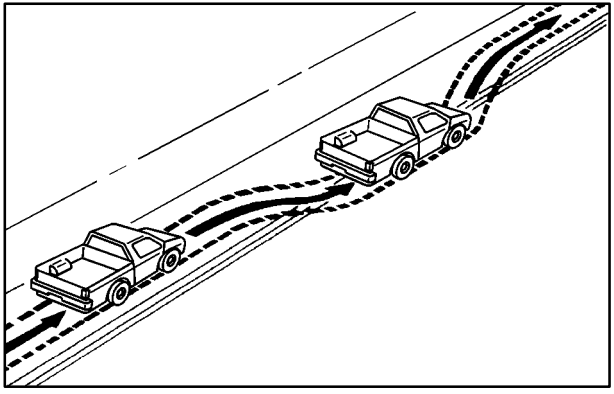

If the level of the shoulder is only slightly below the pavement, recovery should be fairly easy. Ease off the accelerator and then, if there is nothing in the way, steer so that your vehicle straddles the edge of the pavement. You can turn the steering wheel up to one-quarter turn until the right front tire contacts the pavement edge. Then turn your steering wheel to go straight down the roadway.

Passing

The driver of a vehicle about to pass another on a two-lane highway waits for just the right moment, accelerates, moves around the vehicle ahead, then goes back into the right lane again. A simple maneuver?

Not necessarily! Passing another vehicle on a two-lane highway is a potentially dangerous move, since the passing vehicle occupies the same lane as oncoming traffic for several seconds. A miscalculation, an error in judgment, or a brief surrender to frustration or anger can suddenly put the passing driver face to face with the worst of all traffic accidents -- the head-on collision.

So here are some tips for passing:

- “Drive ahead.” Look down the road, to the sides and to crossroads for situations that might affect your passing patterns. If you have any doubt whatsoever about making a successful pass, wait for a better time.
- Watch for traffic signs, pavement markings and lines. If you can see a sign up ahead that might indicate a turn or an intersection, delay your pass. A broken center line usually indicates it’s all right to pass (providing the road ahead is clear). Never cross a solid line on your side of the lane or a double solid line, even if the road seems empty of approaching traffic.
- Do not get too close to the vehicle you want to pass while you’re awaiting an opportunity. For one thing, following too closely reduces your area of vision, especially if you’re following a larger vehicle. Also, you won’t have adequate space if the vehicle ahead suddenly slows or stops. Keep back a reasonable distance.
- When it looks like a chance to pass is coming up, start to accelerate but stay in the right lane and don’t get too close. Time your move so you will be increasing speed as the time comes to move into the other lane. If the way is clear to pass, you will have a “running start” that more than makes up for the distance you would lose by dropping back. And if something happens to cause you to cancel your pass, you need only slow down and drop back again and wait for another opportunity.
- If other cars are lined up to pass a slow vehicle, wait your turn. But take care that someone isn’t trying to pass you as you pull out to pass the slow vehicle. Remember to glance over your shoulder and check the blind spot.

- Check your mirrors, glance over your shoulder and start your left lane change signal before moving out of the right lane to pass. When you are far enough ahead of the passed vehicle to see its front in your inside mirror, activate your right lane change signal and move back into the right lane. (Remember that if your right outside mirror is convex, the vehicle you just passed may seem to be farther away from you than it really is.)
- Try not to pass more than one vehicle at a time on two-lane roads. Reconsider before passing the next vehicle.
- Don't overtake a slowly moving vehicle too rapidly. Even though the brake lamps are not flashing, it may be slowing down or starting to turn.
- If you're being passed, make it easy for the following driver to get ahead of you. Perhaps you can ease a little to the right.

Loss of Control

Let's review what driving experts say about what happens when the three control systems (brakes, steering and acceleration) don't have enough friction where the tires meet the road to do what the driver has asked.

In any emergency, don't give up. Keep trying to steer and constantly seek an escape route or area of less danger.

Skidding

In a skid, a driver can lose control of the vehicle. Defensive drivers avoid most skids by taking reasonable care suited to existing conditions, and by not "overdriving" those conditions. But skids are always possible.

The three types of skids correspond to your vehicle's three control systems. In the braking skid, your wheels aren't rolling. In the steering or cornering skid, too much speed or steering in a curve causes tires to slip and lose cornering force. And in the acceleration skid, too much throttle causes the driving wheels to spin.

A cornering skid and an acceleration skid are best handled by easing your foot off the accelerator pedal.

If your vehicle starts to slide, ease your foot off the accelerator pedal and quickly steer the way you want the vehicle to go. If you start steering quickly enough, your vehicle may straighten out. Always be ready for a second skid if it occurs.

Of course, traction is reduced when water, snow, ice, gravel or other material is on the road. For safety, you'll want to slow down and adjust your driving to these conditions. It is important to slow down on slippery surfaces because stopping distance will be longer and vehicle control more limited.

While driving on a surface with reduced traction, try your best to avoid sudden steering, acceleration or braking (including engine braking by shifting to a lower gear). Any sudden changes could cause the tires to slide. You may not realize the surface is slippery until your vehicle is skidding. Learn to recognize warning clues -- such as enough water, ice or packed snow on the road to make a "mirrored surface" -- and slow down when you have any doubt.

Remember: Any anti-lock brake system (ABS) helps avoid only the braking skid.

Operating Your All-Wheel-Drive Vehicle Off Paved Roads

Many of the same design features that help make your vehicle responsive on paved roads during poor weather conditions -- features like the locking rear axle and all-wheel drive -- help make it much better suited for off-road use than a conventional passenger car. Its higher ground clearance also helps your vehicle step over some off-road obstacles. But your vehicle doesn't have features like special underbody shielding and a transfer case low gear range, things that are usually thought necessary for extended or severe off-road service. This guide is for operating your vehicle off paved roads.

Also, see "Anti-Lock Brakes" in the Index.

Off-road driving can be great fun. But it does have some definite hazards. The greatest of these is the terrain itself.

"Off-roading" means you've left the great North American road system behind. Traffic lanes aren't marked. Curves aren't banked. There are no road signs. Surfaces can be slippery, rough, uphill or downhill. In short, you've gone right back to nature.

Off-road driving involves some new skills. And that's why it's very important that you read this guide. You'll find many driving tips and suggestions. These will help make your off-road driving safer and more enjoyable.

Before You Go Off-Roading

There are some things to do before you go out. For example, be sure to have all necessary maintenance and service work done. Check to make sure all underbody shields (if so equipped) are properly attached. Is there enough fuel? Is the spare tire fully inflated? Are the fluid levels up where they should be? What are the local laws that apply to off-roading where you'll be driving? If you don't know, you should check with law enforcement people in the area. Will you be on someone's private land? If so, be sure to get the necessary permission.

Loading Your Vehicle for Off-Road Driving

There are some important things to remember about how to load your vehicle.

- The heaviest things should be on the load floor and forward of your rear axle. Put heavier items as far forward as you can.
- Be sure the load is secured properly, so driving on the off-road terrain doesn't toss things around.

⚠ CAUTION:

- **Cargo on the load floor piled higher than the seatbacks can be thrown forward during a sudden stop. You or your passengers could be injured. Keep cargo below the top of the seatbacks.**
- **Unsecured cargo on the load floor can be tossed about when driving over rough terrain. You or your passengers can be struck by flying objects. Secure the cargo properly.**
- **Heavy loads on the roof raise the vehicle's center of gravity, making it more likely to roll over. You can be seriously or fatally injured if the vehicle rolls over. Put heavy loads inside the cargo area, not on the roof. Keep cargo in the cargo area as far forward and low as possible.**

You'll find other important information in this manual. See "Vehicle Loading," "Luggage Carrier" and "Tires" in the Index.

Environmental Concerns

Off-road driving can provide wholesome and satisfying recreation. However, it also raises environmental concerns. GMC recognizes these concerns and urges every off-roader to follow these basic rules for protecting the environment:

- Always use established trails, roads and areas that have been specially set aside for public off-road recreational driving; obey all posted regulations.
- Avoid any driving practice that could damage the environment -- shrubs, flowers, trees, grasses -- or disturb wildlife (this includes wheel-spinning, breaking down trees or unnecessary driving through streams or over soft ground).
- Always carry a litter bag . . . make sure all refuse is removed from any campsite before leaving.
- Take extreme care with open fires (where permitted), camp stoves and lanterns.
- Never park your vehicle over dry grass or other combustible materials that could catch fire from the heat of the vehicle's exhaust system.

Traveling to Remote Areas

It makes sense to plan your trip, especially when going to a remote area. Know the terrain and plan your route. You are much less likely to get bad surprises. Get accurate maps of trails and terrain. Try to learn of any blocked or closed roads.

It's also a good idea to travel with at least one other vehicle. If something happens to one of them, the other can help quickly.

Getting Familiar with Off-Road Driving

It's a good idea to practice in an area that's safe and close to home before you go into the wilderness. Off-road driving does require some new and different driving skills. Here's what we mean.

Tune your senses to different kinds of signals. Your eyes, for example, need to constantly sweep the terrain for unexpected obstacles. Your ears need to listen for unusual tire or engine sounds. With your arms, hands, feet and body, you'll need to respond to vibrations and vehicle bounce.

Controlling your vehicle is the key to successful off-road driving. One of the best ways to control your vehicle is to control your speed. Here are some things to keep in mind. At higher speeds:

- you approach things faster and you have less time to scan the terrain for obstacles.
- you have less time to react.
- you have more vehicle bounce when you drive over obstacles.
- you'll need more distance for braking, especially since you're on an unpaved surface.

⚠ CAUTION:

When you're driving off-road, bouncing and quick changes in direction can easily throw you out of position. This could cause you to lose control and crash. So, whether you're driving on or off the road, you and your passengers should wear safety belts.

Scanning the Terrain

Off-road driving can take you over many different kinds of terrain. You need to be familiar with the terrain and its many different features. Here are some things to consider.

Surface Conditions. Off-roading can take you over hard-packed dirt, gravel, rocks, grass, sand, mud, snow or ice. Each of these surfaces affects the steering, acceleration and braking of your vehicle in different ways. Depending upon the kind of surface you are on, you may experience slipping, sliding, wheel spinning, delayed acceleration, poor traction and longer braking distances.

Surface Obstacles. Unseen or hidden obstacles can be hazardous. A rock, log, hole, rut or bump can startle you if you're not prepared for them. Often these obstacles are hidden by grass, bushes, snow or even the rise and fall of the terrain itself. Here are some things to consider:

- Is the path ahead clear?
- Will the surface texture change abruptly up ahead?
- Does the travel take you uphill or downhill? (There's more discussion of these subjects later.)
- Will you have to stop suddenly or change direction quickly?

When you drive over obstacles or rough terrain, keep a firm grip on the steering wheel. Ruts, troughs or other surface features can jerk the wheel out of your hands if you're not prepared.

When you drive over bumps, rocks, or other obstacles, your wheels can leave the ground. If this happens, even with one or two wheels, you can't control the vehicle as well or at all.

Because you will be on an unpaved surface, it's especially important to avoid sudden acceleration, sudden turns or sudden braking.

In a way, off-road driving requires a different kind of alertness from driving on paved roads and highways. There are no road signs, posted speed limits or signal lights. You have to use your own good judgment about what is safe and what isn't.

Drinking and driving can be very dangerous on any road. And this is certainly true for off-road driving. At the very time you need special alertness and driving skills, your reflexes, perceptions and judgment can be affected by even a small amount of alcohol. You could have a serious -- or even fatal -- accident if you drink and drive or ride with a driver who has been drinking. See "Drunken Driving" in the Index.

Driving on Off-Road Hills

Off-road driving often takes you up, down or across a hill. Driving safely on hills requires good judgment and an understanding of what your vehicle can and can't do. There are some hills that simply can't be driven, no matter how well built the vehicle.

⚠ CAUTION:

Many hills are simply too steep for any vehicle. If you drive up them, you will stall. If you drive down them, you can't control your speed. If you drive across them, you will roll over. You could be seriously injured or killed. If you have any doubt about the steepness, don't drive the hill.

Approaching a Hill

When you approach a hill, you need to decide if it's one of those hills that's just too steep to climb, descend or cross. Steepness can be hard to judge. On a very small hill, for example, there may be a smooth, constant incline with only a small change in elevation where you can easily see all the way to the top. On a large hill, the incline may get steeper as you near the top, but you may not see this because the crest of the hill is hidden by bushes, grass or shrubs.

Here are some other things to consider as you approach a hill.

- Is there a constant incline, or does the hill get sharply steeper in places?
- Is there good traction on the hillside, or will the surface cause tire slipping?
- Is there a straight path up or down the hill so you won't have to make turning maneuvers?
- Are there obstructions on the hill that can block your path (boulders, trees, logs or ruts)?
- What's beyond the hill? Is there a cliff, an embankment, a drop-off, a fence? Get out and walk the hill if you don't know. It's the smart way to find out.
- Is the hill simply too rough? Steep hills often have ruts, gullies, troughs and exposed rocks because they are more susceptible to the effects of erosion.

Driving Uphill

Once you decide you can safely drive up the hill, you need to take some special steps.

- Use a low gear and get a firm grip on the steering wheel.
- Get a smooth start up the hill and try to maintain your speed. Don't use more power than you need, because you don't want your wheels to start spinning or sliding.
- Try to drive straight up the hill if at all possible. If the path twists and turns, you might want to find another route.

⚠ CAUTION:

Turning or driving across steep hills can be dangerous. You could lose traction, slide sideways, and possibly roll over. You could be seriously injured or killed. When driving up hills, always try to go straight up.

- Ease up on your speed as you approach the top of the hill.
- Attach a flag to the vehicle to make you more visible to approaching traffic on trails or hills.
- Sound the horn as you approach the top of the hill to let opposing traffic know you're there.
- Use your headlamps even during the day. They make you more visible to oncoming traffic.

⚠ CAUTION:

Driving to the top (crest) of a hill at full speed can cause an accident. There could be a drop-off, embankment, cliff, or even another vehicle. You could be seriously injured or killed. As you near the top of a hill, slow down and stay alert.

Q: What should I do if my vehicle stalls, or is about to stall, and I can't make it up the hill?

A: If this happens, there are some things you should do, and there are some things you must not do. First, here's what you *should* do:

- Push the brake pedal to stop the vehicle and keep it from rolling backwards. Also, apply the parking brake.
- If your engine is still running, shift the transmission to REVERSE (R), release the parking brake, and slowly back down the hill in REVERSE (R).
- If your engine has stopped running, you'll need to restart it. With the brake pedal pressed and the parking brake still applied, shift the transmission to PARK (P) and restart the engine. Then, shift to REVERSE (R), release the parking brake, and slowly back down the hill as straight as possible in REVERSE (R).
- As you are backing down the hill, put your left hand on the steering wheel at the 12 o'clock position. This way, you'll be able to tell if your wheels are straight and maneuver as you back down. It's best that you back down the hill with your wheels straight rather than in the left or right direction. Turning the wheel too far to the left or right will increase the possibility of a rollover.

Here are some things you *must not* do if you stall, or are about to stall, when going up a hill.

- Never attempt to prevent a stall by shifting into NEUTRAL (N) to "rev-up" the engine and regain forward momentum. This won't work. Your vehicle will roll backwards very quickly and you could go out of control.

Instead, apply the regular brake to stop the vehicle. Then apply the parking brake. Shift to REVERSE (R), release the parking brake, and slowly back straight down.

- Never attempt to turn around if you are about to stall when going up a hill. If the hill is steep enough to stall your vehicle, it's steep enough to cause you to roll over if you turn around. If you can't make it up the hill, you must back straight down the hill.

Q: Suppose, after stalling, I try to back down the hill and decide I just can't do it. What should I do?

A: Set the parking brake, put your transmission in PARK (P) and turn off the engine. Leave the vehicle and go get some help. Exit on the uphill side and stay clear of the path the vehicle would take if it rolled downhill.

Driving Downhill

When off-roading takes you downhill, you'll want to consider a number of things:

- How steep is the downhill? Will I be able to maintain vehicle control?
- What's the surface like? Smooth? Rough? Slippery? Hard-packed dirt? Gravel?
- Are there hidden surface obstacles? Ruts? Logs? Boulders?
- What's at the bottom of the hill? Is there a hidden creek bank or even a river bottom with large rocks?

If you decide you can go down a hill safely, then try to keep your vehicle headed straight down, and use a low gear. This way, engine drag can help your brakes and they won't have to do all the work. Descend slowly, keeping your vehicle under control at all times.

⚠ CAUTION:

Heavy braking when going down a hill can cause your brakes to overheat and fade. This could cause loss of control and a serious accident. Apply the brakes lightly when descending a hill and use a low gear to keep vehicle speed under control.

Q: Are there some things I should not do when driving down a hill?

A: Yes! These are important because if you ignore them you could lose control and have a serious accident.

- When driving downhill, avoid turns that take you across the incline of the hill. A hill that's not too steep to drive down may be too steep to drive across. You could roll over if you don't drive straight down.
- Never go downhill with the transmission in NEUTRAL (N). This is called "free-wheeling." Your brakes will have to do all the work and could overheat and fade.

Q: Am I likely to stall when going downhill?

A: It's much more likely to happen going uphill. But if it happens going downhill, here's what to do.

- Stop your vehicle by applying the regular brakes. Apply the parking brake.
- Shift to PARK (P) and, while still braking, restart the engine.
- Shift back to a low gear, release the parking brake, and drive straight down.
- If the engine won't start, get out and get help.

Driving Across an Incline

Sooner or later, an off-road trail will probably go across the incline of a hill. If this happens, you have to decide whether to try to drive across the incline. Here are some things to consider:

- A hill that can be driven straight up or down may be too steep to drive across. When you go straight up or down a hill, the length of the wheel base (the distance from the front wheels to the rear wheels) reduces the likelihood the vehicle will tumble end over end. But when you drive across an incline, the much more narrow track width (the distance between the left and right wheels) may not prevent the vehicle from tilting and rolling over. Also, driving across an incline puts more weight on the downhill wheels. This could cause a downhill slide or a rollover.
- Surface conditions can be a problem when you drive across a hill. Loose gravel, muddy spots, or even wet grass can cause your tires to slip sideways, downhill. If the vehicle slips sideways, it can hit something that will trip it (a rock, a rut, etc.) and roll over.
- Hidden obstacles can make the steepness of the incline even worse. If you drive across a rock with the uphill wheels, or if the downhill wheels drop into a rut or depression, your vehicle can tilt even more.

For reasons like these, you need to decide carefully whether to try to drive across an incline. Just because the trail goes across the incline doesn't mean you have to drive it. The last vehicle to try it might have rolled over.

⚠ CAUTION:

Driving across an incline that's too steep will make your vehicle roll over. You could be seriously injured or killed. If you have any doubt about the steepness of the incline, don't drive across it. Find another route instead.

Q: What if I'm driving across an incline that's not too steep, but I hit some loose gravel and start to slide downhill. What should I do?

A: If you feel your vehicle starting to slide sideways, turn downhill. This should help straighten out the vehicle and prevent the side slipping. However, a much better way to prevent this is to get out and "walk the course" so you know what the surface is like before you drive it.

Stalling on an Incline

If your vehicle stalls when you're crossing an incline, be sure you (and your passengers) get out on the uphill side, even if the door there is harder to open. If you get out on the downhill side and the vehicle starts to roll over, you'll be right in its path.

If you have to walk down the slope, stay out of the path the vehicle will take if it does roll over.

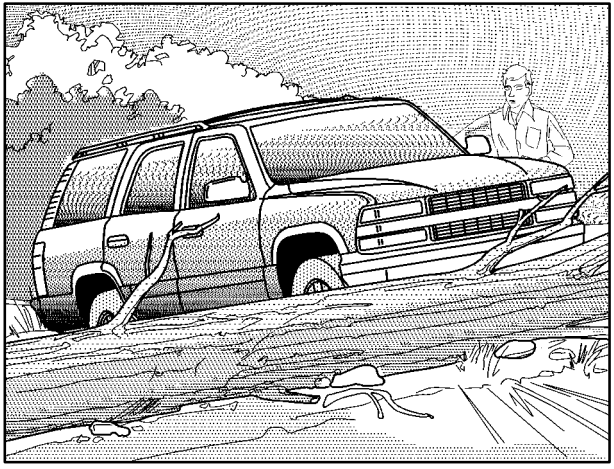

⚠ CAUTION:

Getting out on the downhill (low) side of a vehicle stopped across an incline is dangerous. If the vehicle rolls over, you could be crushed or killed. Always get out on the uphill (high) side of the vehicle and stay well clear of the rollover path.

Driving in Mud, Sand, Snow or Ice

When you drive in mud, snow or sand, your wheels won't get good traction. You can't accelerate as quickly, turning is more difficult, and you'll need longer braking distances.

It's best to use a low gear when you're in mud -- the deeper the mud, the lower the gear. In really deep mud, the idea is to keep your vehicle moving so you don't get stuck.

When you drive on sand, you'll sense a change in wheel traction. But it will depend upon how loosely packed the sand is. On loosely packed sand (as on beaches or sand dunes) your tires will tend to sink into the sand. This has an effect on steering, accelerating and braking. You may want to reduce the air pressure in your tires slightly when driving on sand. This will improve traction.

Hard packed snow and ice offer the worst tire traction. On these surfaces, it's very easy to lose control. On wet ice, for example, the traction is so poor that you will have difficulty accelerating. And if you do get moving, poor steering and difficult braking can cause you to slide out of control.

⚠ CAUTION:

Driving on frozen lakes, ponds or rivers can be dangerous. Underwater springs, currents under the ice, or sudden thaws can weaken the ice. Your vehicle could fall through the ice and you and your passengers could drown. Drive your vehicle on safe surfaces only.

Driving in Water

Light rain causes no special off-road driving problems. But heavy rain can mean flash flooding, and flood waters demand extreme caution.

Find out how deep the water is before you drive through it. If it's deep enough to cover your wheel hubs, axles or exhaust pipe, don't try it -- you probably won't get through. Also, water that deep can damage your axle and other vehicle parts.

If the water isn't too deep, then drive through it slowly. At fast speeds, water splashes on your ignition system and your vehicle can stall. Stalling can also occur if you get your tailpipe under water. And, as long as your tailpipe is under water, you'll never be able to start your engine. When you go through water, remember that when your brakes get wet, it may take you longer to stop.

⚠ CAUTION:

Driving through rushing water can be dangerous. Deep water can sweep your vehicle downstream and you and your passengers could drown. If it's only shallow water, it can still wash away the ground from under your tires, and you could lose traction and roll the vehicle over. Don't drive through rushing water.

See "Driving Through Water" in the Index for more information on driving through water.

After Off-Road Driving

Remove any brush or debris that has collected on the underbody, chassis or under the hood. These accumulations can be a fire hazard.

After operation in mud or sand, have the brake linings cleaned and checked. These substances can cause glazing and uneven braking. Check the body structure, steering, suspension, wheels, tires and exhaust system for damage. Also, check the fuel lines and cooling system for any leakage.

Your vehicle will require more frequent service due to off-road use. Refer to the Maintenance Schedule for additional information.

Driving at Night

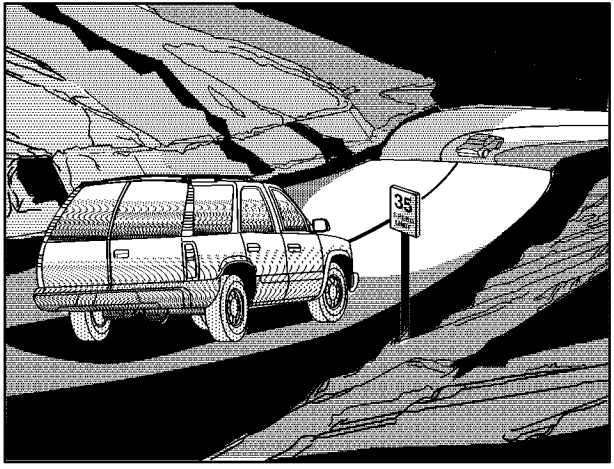

Night driving is more dangerous than day driving. One reason is that some drivers are likely to be impaired -- by alcohol or drugs, with night vision problems, or by fatigue.

Here are some tips on night driving.

- Drive defensively.
- Don't drink and drive.
- Since you can't see as well, you may need to slow down and keep more space between you and other vehicles.
- Slow down, especially on higher speed roads. Your headlamps can light up only so much road ahead.
- In remote areas, watch for animals.
- If you're tired, pull off the road in a safe place and rest.

No one can see as well at night as in the daytime. But as we get older these differences increase. A 50-year-old driver may require at least twice as much light to see the same thing at night as a 20-year-old.

What you do in the daytime can also affect your night vision. For example, if you spend the day in bright sunshine you are wise to wear sunglasses. Your eyes will have less trouble adjusting to night. But if you're driving, don't wear sunglasses at night. They may cut down on glare from headlamps, but they also make a lot of things invisible.

You can be temporarily blinded by approaching headlamps. It can take a second or two, or even several seconds, for your eyes to readjust to the dark. When you are faced with severe glare (as from a driver who doesn't lower the high beams, or a vehicle with misaimed headlamps), slow down a little. Avoid staring directly into the approaching headlamps.

Keep your windshield and all the glass on your vehicle clean -- inside and out. Glare at night is made much worse by dirt on the glass. Even the inside of the glass can build up a film caused by dust. Dirty glass makes lights dazzle and flash more than clean glass would, making the pupils of your eyes contract repeatedly.

Remember that your headlamps light up far less of a roadway when you are in a turn or curve. Keep your eyes moving; that way, it's easier to pick out dimly lighted objects. Just as your headlamps should be checked regularly for proper aim, so should your eyes be examined regularly. Some drivers suffer from night blindness -- the inability to see in dim light -- and aren't even aware of it.

Driving in Rain and on Wet Roads

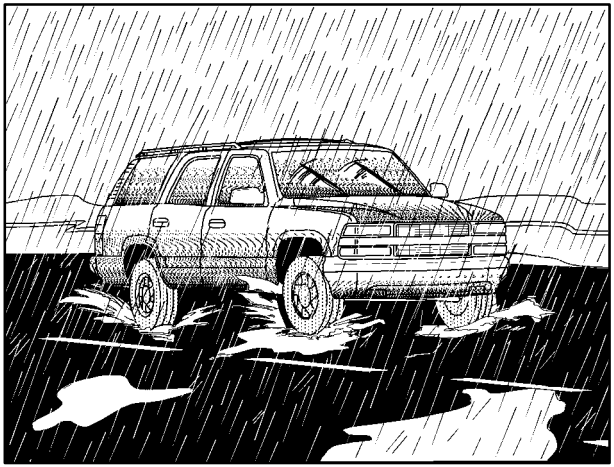

Rain and wet roads can mean driving trouble. On a wet road, you can't stop, accelerate or turn as well because your tire-to-road traction isn't as good as on dry roads. And, if your tires don't have much tread left, you'll get even less traction. It's always wise to go slower and be cautious if rain starts to fall while you are driving. The surface may get wet suddenly when your reflexes are tuned for driving on dry pavement.

The heavier the rain, the harder it is to see. Even if your windshield wiper blades are in good shape, a heavy rain can make it harder to see road signs and traffic signals, pavement markings, the edge of the road and even people walking.

It's wise to keep your wiping equipment in good shape and keep your windshield washer tank filled with washer fluid. Replace your windshield wiper inserts when they show signs of streaking or missing areas on the windshield, or when strips of rubber start to separate from the inserts.

Driving too fast through large water puddles or even going through some car washes can cause problems, too. The water may affect your brakes. Try to avoid puddles. But if you can't, try to slow down before you hit them.

⚠ CAUTION:

Wet brakes can cause accidents. They won't work as well in a quick stop and may cause pulling to one side. You could lose control of the vehicle.

After driving through a large puddle of water or a car wash, apply your brake pedal lightly until your brakes work normally.

Hydroplaning

Hydroplaning is dangerous. So much water can build up under your tires that they can actually ride on the water. This can happen if the road is wet enough and you're going fast enough. When your vehicle is hydroplaning, it has little or no contact with the road.

Hydroplaning doesn't happen often. But it can if your tires do not have much tread or if the pressure in one or more is low. It can happen if a lot of water is standing on the road. If you can see reflections from trees, telephone poles or other vehicles, and raindrops "dimple" the water's surface, there could be hydroplaning.

Hydroplaning usually happens at higher speeds. There just isn't a hard and fast rule about hydroplaning. The best advice is to slow down when it is raining.

Driving Through Deep Standing Water

NOTICE:

If you drive too quickly through deep puddles or standing water, water can come in through your engine's air intake and badly damage your engine. Never drive through water that is slightly lower than the underbody of your vehicle. If you can't avoid deep puddles or standing water, drive through them very slowly.

Driving Through Flowing Water

⚠ CAUTION:

Flowing or rushing water creates strong forces. If you try to drive through flowing water, as you might at a low water crossing, your vehicle can be carried away. As little as six inches of flowing water can carry away a smaller vehicle. If this happens, you and the other vehicle occupants could drown. Don't ignore police warning signs, and otherwise be very cautious about trying to drive through flowing water.

Some Other Rainy Weather Tips

- Besides slowing down, allow some extra following distance. And be especially careful when you pass another vehicle. Allow yourself more clear room ahead, and be prepared to have your view restricted by road spray.
- Have good tires with proper tread depth. See "Tires" in the Index.

City Driving

One of the biggest problems with city streets is the amount of traffic on them. You'll want to watch out for what the other drivers are doing and pay attention to traffic signals.

Here are ways to increase your safety in city driving:

- Know the best way to get to where you are going. Get a city map and plan your trip into an unknown part of the city just as you would for a cross-country trip.
- Try to use the freeways that rim and crisscross most large cities. You'll save time and energy. See the next part, "Freeway Driving."
- Treat a green light as a warning signal. A traffic light is there because the corner is busy enough to need it. When a light turns green, and just before you start to move, check both ways for vehicles that have not cleared the intersection or may be running the red light.

Freeway Driving

Mile for mile, freeways (also called thruways, parkways, expressways, turnpikes or superhighways) are the safest of all roads. But they have their own special rules.

The most important advice on freeway driving is: Keep up with traffic and keep to the right. Drive at the same speed most of the other drivers are driving. Too-fast or too-slow driving breaks a smooth traffic flow. Treat the left lane on a freeway as a passing lane.

At the entrance, there is usually a ramp that leads to the freeway. If you have a clear view of the freeway as you drive along the entrance ramp, you should begin to check traffic. Try to determine where you expect to blend with the flow. Try to merge into the gap at close to the prevailing speed. Switch on your turn signal, check your mirrors and glance over your shoulder as often as necessary. Try to blend smoothly with the traffic flow.

Once you are on the freeway, adjust your speed to the posted limit or to the prevailing rate if it's slower. Stay in the right lane unless you want to pass.

Before changing lanes, check your mirrors. Then use your turn signal.

Just before you leave the lane, glance quickly over your shoulder to make sure there isn't another vehicle in your "blind" spot.

Once you are moving on the freeway, make certain you allow a reasonable following distance. Expect to move slightly slower at night.

When you want to leave the freeway, move to the proper lane well in advance. If you miss your exit, do not, under any circumstances, stop and back up. Drive on to the next exit.

The exit ramp can be curved, sometimes quite sharply.

The exit speed is usually posted.

Reduce your speed according to your speedometer, not to your sense of motion. After driving for any distance at higher speeds, you may tend to think you are going slower than you actually are.

Before Leaving on a Long Trip

Make sure you're ready. Try to be well rested. If you must start when you're not fresh -- such as after a day's work -- don't plan to make too many miles that first part of the journey. Wear comfortable clothing and shoes you can easily drive in.

Is your vehicle ready for a long trip? If you keep it serviced and maintained, it's ready to go. If it needs service, have it done before starting out. Of course, you'll find experienced and able service experts in GMC dealerships all across North America. They'll be ready and willing to help if you need it.

Here are some things you can check before a trip:

- *Windshield Washer Fluid:* Is the reservoir full? Are all windows clean inside and outside?
- *Wiper Blades:* Are they in good shape?
- *Fuel, Engine Oil, Other Fluids:* Have you checked all levels?
- *Lamps:* Are they all working? Are the lenses clean?
- *Tires:* They are vitally important to a safe, trouble-free trip. Is the tread good enough for long-distance driving? Are the tires all inflated to the recommended pressure?
- *Weather Forecasts:* What's the weather outlook along your route? Should you delay your trip a short time to avoid a major storm system?
- *Maps:* Do you have up-to-date maps?

Highway Hypnosis

Is there actually such a condition as “highway hypnosis”? Or is it just plain falling asleep at the wheel? Call it highway hypnosis, lack of awareness, or whatever.

There is something about an easy stretch of road with the same scenery, along with the hum of the tires on the road, the drone of the engine, and the rush of the wind against the vehicle that can make you sleepy. Don’t let it happen to you! If it does, your vehicle can leave the road in *less than a second*, and you could crash and be injured.

What can you do about highway hypnosis? First, be aware that it can happen.

Then here are some tips:

- Make sure your vehicle is well ventilated, with a comfortably cool interior.
- Keep your eyes moving. Scan the road ahead and to the sides. Check your mirrors and your instruments frequently.
- If you get sleepy, pull off the road into a rest, service or parking area and take a nap, get some exercise, or both. For safety, treat drowsiness on the highway as an emergency.

Hill and Mountain Roads

Driving on steep hills or mountains is different from driving in flat or rolling terrain.

If you drive regularly in steep country, or if you're planning to visit there, here are some tips that can make your trips safer and more enjoyable. See "Operating Your Vehicle Off Paved Roads" in the Index for information about driving off-road.

- Keep your vehicle in good shape. Check all fluid levels and also the brakes, tires, cooling system and transmission. These parts can work hard on mountain roads.
- Know how to go down hills. The most important thing to know is this: let your engine do some of the slowing down. Shift to a lower gear when you go down a steep or long hill.

⚠ CAUTION:

If you don't shift down, your brakes could get so hot that they wouldn't work well. You would then have poor braking or even none going down a hill. You could crash. Shift down to let your engine assist your brakes on a steep downhill slope.

⚠ CAUTION:

Coasting downhill in NEUTRAL (N) or with the ignition off is dangerous. Your brakes will have to do all the work of slowing down. They could get so hot that they wouldn't work well. You would then have poor braking or even none going down a hill. You could crash. Always have your engine running and your vehicle in gear when you go downhill.

- Know how to go uphill. You may want to shift down to a lower gear. The lower gears help cool your engine and transmission, and you can climb the hill better.
- Stay in your own lane when driving on two-lane roads in hills or mountains. Don't swing wide or cut across the center of the road. Drive at speeds that let you stay in your own lane.
- As you go over the top of a hill, be alert. There could be something in your lane, like a stalled car or an accident.
- You may see highway signs on mountains that warn of special problems. Examples are long grades, passing or no-passing zones, a falling rocks area or winding roads. Be alert to these and take appropriate action.

Winter Driving

Here are some tips for winter driving:

- Have your vehicle in good shape for winter.
- You may want to put winter emergency supplies in your vehicle.

Include an ice scraper, a small brush or broom, a supply of windshield washer fluid, a rag, some winter outer clothing, a small shovel, a flashlight, a red cloth and reflective warning triangles. And, if you will be driving under severe conditions, include a small bag of sand, a piece of old carpet or a couple of burlap bags to help provide traction. Be sure you properly secure these items in your vehicle.

Driving on Snow or Ice

Most of the time, those places where your tires meet the road probably have good traction.

However, if there is snow or ice between your tires and the road, you can have a very slippery situation. You'll have a lot less traction or "grip" and will need to be very careful.

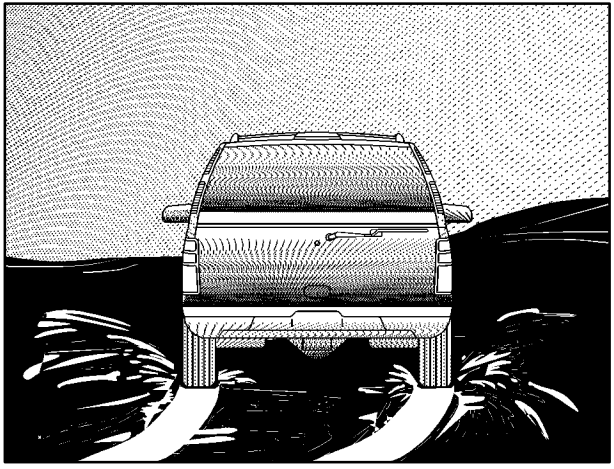

What's the worst time for this? "Wet ice." Very cold snow or ice can be slick and hard to drive on. But wet ice can be even more trouble because it may offer the least traction of all. You can get wet ice when it's about freezing (32°F; 0°C) and freezing rain begins to fall. Try to avoid driving on wet ice until salt and sand crews can get there.

Whatever the condition -- smooth ice, packed, blowing or loose snow -- drive with caution.

Accelerate gently. Try not to break the fragile traction. If you accelerate too fast, the drive wheels will spin and polish the surface under the tires even more.

Your anti-lock brakes improve your vehicle's stability when you make a hard stop on a slippery road. Even though you have an anti-lock braking system, you'll want to begin stopping sooner than you would on dry pavement. See "Anti-Lock" in the Index.

- Allow greater following distance on any slippery road.
- Watch for slippery spots. The road might be fine until you hit a spot that's covered with ice. On an otherwise clear road, ice patches may appear in shaded areas where the sun can't reach: around clumps of trees, behind buildings or under bridges. Sometimes the surface of a curve or an overpass may remain icy when the surrounding roads are clear. If you see a patch of ice ahead of you, brake before you are on it. Try not to brake while you're actually on the ice, and avoid sudden steering maneuvers.

If You're Caught in a Blizzard

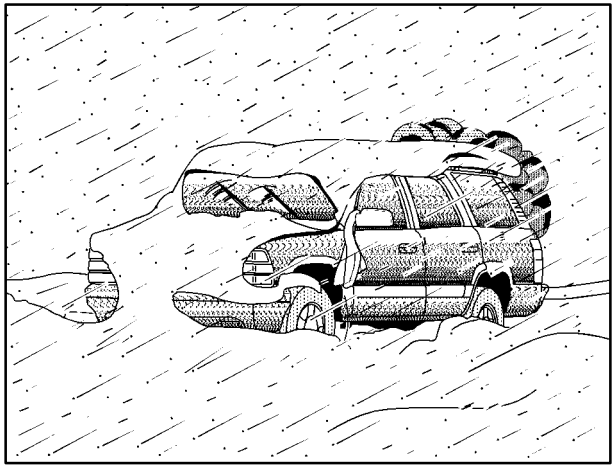

If you are stopped by heavy snow, you could be in a serious situation. You should probably stay with your vehicle unless you know for sure that you are near help and you can hike through the snow. Here are some things to do to summon help and keep yourself and your passengers safe:

- Turn on your hazard flashers.
- Tie a red cloth to your vehicle to alert police that you've been stopped by the snow.
- Put on extra clothing or wrap a blanket around you. If you have no blankets or extra clothing, make body insulators from newspapers, burlap bags, rags, floor mats -- anything you can wrap around yourself or tuck under your clothing to keep warm.

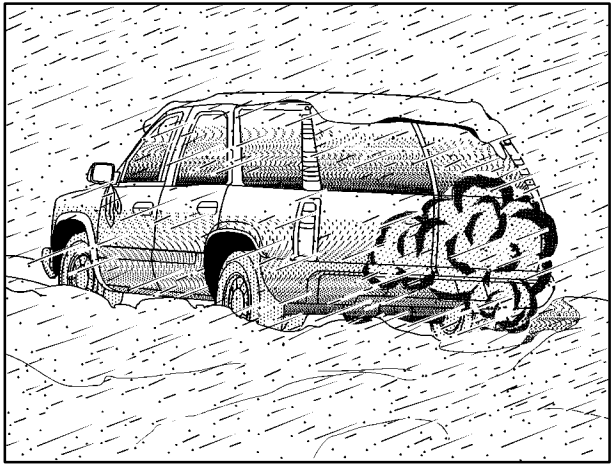

You can run the engine to keep warm, but be careful.

⚠ CAUTION:

Snow can trap exhaust gases under your vehicle. This can cause deadly CO (carbon monoxide) gas to get inside. CO could overcome you and kill you. You can't see it or smell it, so you might not know it is in your vehicle. Clear away snow from around the base of your vehicle, especially any that is blocking your exhaust pipe. And check around again from time to time to be sure snow doesn't collect there.

Open a window just a little on the side of the vehicle that's away from the wind. This will help keep CO out.

Run your engine only as long as you must. This saves fuel. When you run the engine, make it go a little faster than just idle. That is, push the accelerator slightly. This uses less fuel for the heat that you get and it keeps the battery charged. You will need a well-charged battery to restart the vehicle, and possibly for signaling later on with your headlamps. Let the heater run for a while.

Then, shut the engine off and close the window almost all the way to preserve the heat. Start the engine again and repeat this only when you feel really uncomfortable from the cold. But do it as little as possible. Preserve the fuel as long as you can. To help keep warm, you can get out of the vehicle and do some fairly vigorous exercises every half hour or so until help comes.

Recreational Vehicle Towing

Recreational vehicle towing means towing your vehicle behind another vehicle -- such as behind a motorhome. The two most common types of recreational vehicle towing are known as “dinghy towing” (towing your vehicle with all four wheels on the ground) and “dolly towing” (towing your vehicle with two wheels on the ground and two wheels up on a device known as a “dolly”).

Your vehicle was not designed to be towed with any of its wheels on the ground. If your vehicle must be towed, see “Towing Your Vehicle” in the Index.

NOTICE:

Towing your vehicle with all four wheels on the ground will damage drivetrain components. And, since your vehicle has all-wheel drive, towing with only two wheels on the ground will also damage drivetrain components.

Loading Your Vehicle

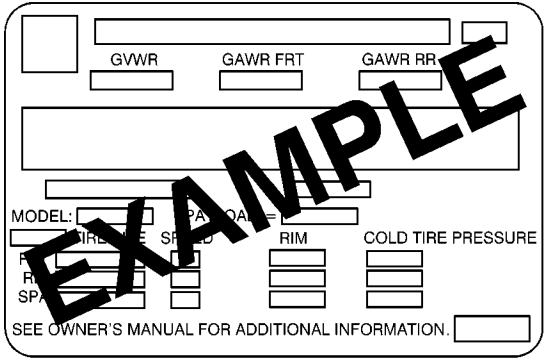

The Certification/Tire label is found on the rear edge of the driver's door.

The label shows the size of your original tires and the inflation pressures needed to obtain the gross weight capacity of your vehicle. This is called the GVWR (Gross Vehicle Weight Rating). The GVWR includes the weight of the vehicle, all occupants, fuel and cargo.

The Certification/Tire label also tells you the maximum weights for the front and rear axles, called Gross Axle Weight Rating (GAWR). To find out the actual loads on your front and rear axles, you need to go to a weigh station and weigh your vehicle. Your dealer can help you with this. Be sure to spread out your load equally on both sides of the centerline.

Never exceed the GVWR for your vehicle, or the GAWR for either the front or rear axle.

And, if you do have a heavy load, you should spread it out.

⚠ CAUTION:

Do not load your vehicle any heavier than the GVWR, or either the maximum front or rear GAWR. If you do, parts on your vehicle can break, and it can change the way your vehicle handles. These could cause you to lose control and crash. Also, overloading can shorten the life of your vehicle.

Your warranty does not cover parts or components that fail because of overloading.

The label will help you decide how much cargo and installed equipment your truck can carry.

Using heavier suspension components to get added durability might not change your weight ratings. Ask your dealer to help you load your vehicle the right way.

If you put things inside your vehicle -- like suitcases, tools, packages, or anything else -- they go as fast as the vehicle goes. If you have to stop or turn quickly, or if there is a crash, they'll keep going.

⚠ CAUTION:

Things you put inside your vehicle can strike and injure people in a sudden stop or turn, or in a crash.

- **Put things in the cargo area of your vehicle. Try to spread the weight evenly.**
- **Never stack heavier things, like suitcases, inside the vehicle so that some of them are above the tops of the seats.**
- **Don't leave an unsecured child restraint in your vehicle.**
- **When you carry something inside the vehicle, secure it whenever you can.**
- **Don't leave a seat folded down unless you need to.**

There's also important loading information for off-road driving in this manual. See "Loading Your Vehicle for Off-Road Driving" in the Index.

Trailer Recommendations

You must subtract your hitch loads from the Cargo Weight Rating (CWR). CWR is the maximum weight of the load your vehicle can carry. It doesn't include the weight of the people inside. But you can figure about 150 lbs. (68 kg) for each seat. The total cargo load must not be more than your vehicle's CWR.

Weigh your vehicle with the trailer attached, so that you won't go over the GVWR or GAWR. If you are using a weight-distributing hitch, weigh the vehicle without the equalizer bars in place.

You'll get the best performance if you spread out the weight of your load the right way, and if you choose the correct hitch and trailer brakes.

For more information, see "Trailer Towing" in the Index.

Automatic Level Control

The automatic level control rear suspension comes as a part of the Autoride™ suspension. See "Autoride™" in the Index for more information.

This type of level control is fully automatic and will provide a better leveled riding position as well as better handling under a variety of passenger and loading conditions. An air compressor connected to the rear shocks will raise or lower the rear of the vehicle to maintain proper vehicle height. The system is activated when the ignition key is turned to RUN and will automatically adjust vehicle height thereafter. The system may exhaust (lower vehicle height) for up to 10 minutes after the ignition key has been turned to OFF. You may hear the air compressor operating when the height is being adjusted.

If a weight-distributing hitch is being used, it is recommended to allow the shocks to inflate, thereby leveling the vehicle prior to adjusting the hitch.

Towing a Trailer

⚠ CAUTION:

If you don't use the correct equipment and drive properly, you can lose control when you pull a trailer. For example, if the trailer is too heavy, the brakes may not work well -- or even at all. You and your passengers could be seriously injured. Pull a trailer only if you have followed all the steps in this section. Ask your dealer for advice and information about towing a trailer with your vehicle.

NOTICE:

Pulling a trailer improperly can damage your vehicle and result in costly repairs not covered by your warranty. To pull a trailer correctly, follow the advice in this part, and see your dealer for important information about towing a trailer with your vehicle.

To identify what the vehicle trailering capacity is for your vehicle, you should read the information in "Weight of the Trailer" that appears later in this section.

If yours was built with trailering options, as many are, it's ready for heavier trailers. But trailering is different than just driving your vehicle by itself. Trailering means changes in handling, durability and fuel economy. Successful, safe trailering takes correct equipment, and it has to be used properly.

That's the reason for this part. In it are many time-tested, important trailering tips and safety rules. Many of these are important for your safety and that of your passengers. So please read this section carefully before you pull a trailer.

If You Do Decide To Pull A Trailer

If you do, here are some important points:

- There are many different laws, including speed limit restrictions, having to do with trailering. Make sure your rig will be legal, not only where you live but also where you'll be driving. A good source for this information can be state or provincial police.
- Consider using a sway control if your trailer will weigh 5,000 lbs. (2 270 kg) or less. You should always use a sway control if your trailer will weigh more than 5,000 lbs. (2 270 kg). You can ask a hitch dealer about sway controls.
- Don't tow a trailer at all during the first 500 miles (800 km) your new vehicle is driven. Your engine, axle or other parts could be damaged.
- Then, during the first 500 miles (800 km) that you tow a trailer, don't drive over 50 mph (80 km/h) and don't make starts at full throttle. This helps your engine and other parts of your vehicle wear in at the heavier loads.
- You can tow in DRIVE (D). You may want to shift the transmission to THIRD (3) or, if necessary, a lower gear selection if the transmission shifts too often (e.g., under heavy loads and/or hilly conditions). See "Tow/Haul Mode" in the Index.

Three important considerations have to do with weight:

- the weight of the trailer,
- the weight of the trailer tongue
- and the weight on your vehicle's tires.

Tow/Haul Mode

The tow/haul feature assists when pulling a heavy trailer or a large or heavy load. The purpose of the tow/haul mode is to:

- Reduce the frequency and improve the predictability of transmission shifts when pulling a heavy trailer or a large or heavy load.
- Provide the same solid shift feel when pulling a heavy trailer or a large or heavy load as when the vehicle is unloaded.
- Improve control of vehicle speed while requiring less throttle pedal activity when pulling a heavy trailer or a large or heavy load.

Your vehicle is provided with a button at the end of the shift lever which when pressed enables tow/haul. When the button is pressed, a light on the instrument panel will illuminate to indicate that tow/haul has been selected. Tow/haul may be turned off by pressing the button again, at which time the indicator light on the instrument panel will turn off. The vehicle will automatically turn off tow/haul every time it is started.

Tow/haul is designed to be most effective when the vehicle and trailer combined weight is at least 75 percent of the vehicle's Gross Combined Weight Rating (GCWR). See "Weight of the Trailer" later in this section. Tow/haul is most useful under the following driving conditions:

- When pulling a heavy trailer or a large or heavy load through rolling terrain.
- When pulling a heavy trailer or a large or heavy load in stop and go traffic.
- When pulling a heavy trailer or a large or heavy load in busy parking lots where improved low speed control of the vehicle is desired.

Operating the vehicle in tow/haul when lightly loaded or with no trailer at all will not cause damage. However, there is no benefit to the selection of tow/haul when the vehicle is unloaded. Such a selection when unloaded may result in unpleasant engine and transmission driving characteristics and reduced fuel economy. Tow/haul is recommended only when pulling a heavy trailer or a large or heavy load.

Weight of the Trailer

How heavy can a trailer safely be?

It depends on how you plan to use your rig. For example, speed, altitude, road grades, outside temperature and how much your vehicle is used to pull a trailer are all important. And, it can also depend on any special equipment that you have on your vehicle.

Use one of the following charts to determine how much your vehicle can weigh, based upon your vehicle model and options.

Maximum trailer weight is calculated assuming only the driver is in the tow vehicle and it has all the required trailering equipment. The weight of additional optional equipment, passengers and cargo in the tow vehicle must be subtracted from the maximum trailer weight.

Vehicle	Axle Ratio	Max. Trailer Wt.	**GCWR
Yukon Denali	3.73	8, 200 lbs. (3 719 kg)	14, 000 lbs. (6 350 kg)
Yukon XL Denali	3.73	8, 000 lbs. (3 628 kg)	14, 000 lbs. (6 350 kg)

* Weight-distributing hitch tongue weight 10 percent to 15 percent of trailer weight up to 1,000 lbs. (454 kg) maximum.

**The Gross Combination Weight Rating (GCWR) in the total allowable weight of the completely loaded vehicle and trailer including any passengers, cargo, equipment and conversions. The GCWR for your vehicle should not be exceeded.

You can ask your dealer for our trailering information or advice, or you can write us at the address listed in your Warranty and Owner Assistance Information Booklet.

In Canada, write to:

General Motors of Canada Limited
Customer Communication Centre, 163-005
1908 Colonel Sam Drive
Oshawa, Ontario L1H 8P7

Weight of the Trailer Tongue

The tongue load (A) of any trailer is an important weight to measure because it affects the total or gross weight of your vehicle. The Gross Vehicle Weight (GVW) includes the curb weight of the vehicle, any cargo you may carry in it, and the people who will be riding in the vehicle. And if you will tow a trailer, you must add the tongue load to the GVW because your vehicle will be carrying that weight, too. See “Loading Your Vehicle” in the Index for more information about your vehicle’s maximum load capacity.

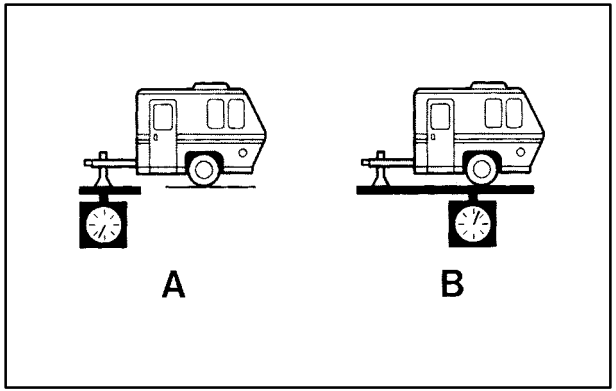

If you're using a weight-carrying or a weight-distributing hitch, the trailer tongue weight (A) should be 10 percent to 15 percent of the total loaded trailer weight (B). Do not exceed the maximum allowable tongue weight for your vehicle.

After you've loaded your trailer, weigh the trailer and then the tongue, separately, to see if the weights are proper. If they aren't, you may be able to get them right simply by moving some items around in the trailer.

Total Weight on Your Vehicle's Tires

Be sure your vehicle's tires are inflated to the upper limit for cold tires. You'll find these numbers on the Certification label at the rear edge of the driver's door or see "Tire Loading" in the Index. Then be sure you don't go over the GVW limit for your vehicle, including the weight of the trailer tongue.

Hitches

It's important to have the correct hitch equipment. Crosswinds, large trucks going by and rough roads are a few reasons why you'll need the right hitch. Here are some rules to follow:

- If you'll be pulling a trailer that, when loaded, will weigh more than 5,000 lbs. (2 270 kg), be sure to use a properly mounted, weight-distributing hitch and sway control of the proper size. This equipment is very important for proper vehicle loading and good handling when you're driving.
- Will you have to make any holes in the body of your vehicle when you install a trailer hitch?

  If you do, then be sure to seal the holes later when you remove the hitch. If you don't seal them, deadly carbon monoxide (CO) from your exhaust can get into your vehicle. See "Carbon Monoxide" in the Index. Dirt and water can, too.

Safety Chains

You should always attach chains between your vehicle and your trailer. Cross the safety chains under the tongue of the trailer to help prevent the tongue from contacting the road if it becomes separated from the hitch. Instructions about safety chains may be provided by the hitch manufacturer or by the trailer manufacturer. Always leave just enough slack so you can turn with your rig. Never allow safety chains to drag on the ground.

Trailer Brakes

If your trailer weighs more than 2,000 lbs. (900 kg) loaded, then it needs its own brakes -- and they must be adequate. Be sure to read and follow the instructions for the trailer brakes so you'll be able to install, adjust and maintain them properly.

Your trailer brake system can tap into the vehicle's hydraulic brake system only if:

- The trailer parts can withstand 3,000 psi (20 650 kPa) of pressure.
- The trailer's brake system will use less than 0.02 cubic inch (0.3 cc) of fluid from your vehicle's master cylinder. Otherwise, both braking systems won't work well. You could even lose your brakes.

If everything checks out this far, make the brake tap at the port on the master cylinder that sends the fluid to the rear brakes. But don't use copper tubing for this. If you do, it will bend and finally break off. Use steel brake tubing.

Driving with a Trailer

⚠ CAUTION:

If you have a rear-most window open and you pull a trailer with your vehicle, carbon monoxide (CO) could come into your vehicle. You can't see or smell CO. It can cause unconsciousness or death. See "Engine Exhaust" in the Index. To maximize your safety when towing a trailer:

- **Have your exhaust system inspected for leaks, and make necessary repairs before starting on your trip.**
- **Keep the rear-most windows closed.**
- **If exhaust does come into your vehicle through a window in the rear or another opening, drive with your front, main heating or cooling system on and with the fan on any speed. This will bring fresh, outside air into your vehicle. Do not use recirculation because it only recirculates the air inside your vehicle. See "Comfort Controls" in the Index.**

Towing a trailer requires a certain amount of experience. Before setting out for the open road, you'll want to get to know your rig. Acquaint yourself with the feel of handling and braking with the added weight of the trailer. And always keep in mind that the vehicle you are driving is now a good deal longer and not nearly as responsive as your vehicle is by itself.

Before you start, check the trailer hitch and platform (and attachments), safety chains, electrical connector, lamps, tires and mirror adjustment. If the trailer has electric brakes, start your vehicle and trailer moving and then apply the trailer brake controller by hand to be sure the brakes are working. This lets you check your electrical connection at the same time.

During your trip, check occasionally to be sure that the load is secure, and that the lamps and any trailer brakes are still working.

Following Distance

Stay at least twice as far behind the vehicle ahead as you would when driving your vehicle without a trailer. This can help you avoid situations that require heavy braking and sudden turns.

Passing

You'll need more passing distance up ahead when you're towing a trailer. And, because you're a good deal longer, you'll need to go much farther beyond the passed vehicle before you can return to your lane.

Backing Up

Hold the bottom of the steering wheel with one hand. Then, to move the trailer to the left, just move that hand to the left. To move the trailer to the right, move your hand to the right. Always back up slowly and, if possible, have someone guide you.

Making Turns

NOTICE:

Making very sharp turns while trailering could cause the trailer to come in contact with the vehicle. Your vehicle could be damaged. Avoid making very sharp turns while trailering.

When you're turning with a trailer, make wider turns than normal. Do this so your trailer won't strike soft shoulders, curbs, road signs, trees or other objects. Avoid jerky or sudden maneuvers. Signal well in advance.

Turn Signals When Towing a Trailer

The arrows on your instrument panel will flash whenever you signal a turn or lane change. Properly hooked up, the trailer lamps will also flash, telling other drivers you're about to turn, change lanes or stop.

When towing a trailer, the arrows on your instrument panel will flash for turns even if the bulbs on the trailer are burned out. Thus, you may think drivers behind you are seeing your signal when they are not. It's important to check occasionally to be sure the trailer bulbs are still working.

Driving On Grades

Reduce speed and shift to a lower gear *before* you start down a long or steep downgrade. If you don't shift down, you might have to use your brakes so much that they would get hot and no longer work well.

You can tow in DRIVE (D). You may want to shift the transmission to THIRD (3) or, if necessary, a lower gear selection if the transmission shifts too often (e.g., under heavy loads and/or hilly conditions).

You may also want to activate the tow/haul mode if the transmission shifts too often. See "Tow/Haul Mode" in the Index.

When towing at high altitude on steep uphill grades, consider the following: Engine coolant will boil at a lower temperature than at normal altitudes. If you turn your engine off immediately after towing at high altitude on steep uphill grades, your vehicle may show signs similar to engine overheating. To avoid this, let the engine run while parked (preferably on level ground) with the automatic transmission in PARK (P) for a few minutes before turning the engine off. If you do get the overheat warning, see "Engine Overheating" in the Index.

Parking on Hills

⚠ CAUTION:

You really should not park your vehicle, with a trailer attached, on a hill. If something goes wrong, your rig could start to move. People can be injured, and both your vehicle and the trailer can be damaged.

But if you ever have to park your rig on a hill, here's how to do it:

1. Apply your regular brakes, but don't shift into PARK (P) yet.
2. Have someone place chocks under the trailer wheels.
3. When the wheel chocks are in place, release the regular brakes until the chocks absorb the load.
4. Reapply the regular brakes. Then apply your parking brake and shift into PARK (P).
5. Release the regular brakes.

When You Are Ready to Leave After Parking on a Hill

1. Apply your regular brakes and hold the pedal down while you:
   - start your engine,
   - shift into a gear, and
   - release the parking brake.
2. Let up on the brake pedal.
3. Drive slowly until the trailer is clear of the chocks.
4. Stop and have someone pick up and store the chocks.

Maintenance When Trailer Towing

Your vehicle will need service more often when you're pulling a trailer. See the Maintenance Schedule for more on this. Things that are especially important in trailer operation are automatic transmission fluid (don't overfill), engine oil, axle lubricant, belt, cooling system and brake system. Each of these is covered in this manual, and the Index will help you find them quickly. If you're trailering, it's a good idea to review these sections before you start your trip.

Check periodically to see that all hitch nuts and bolts are tight.

Trailer Wiring Harness

Heavy-Duty Trailer Wiring Package

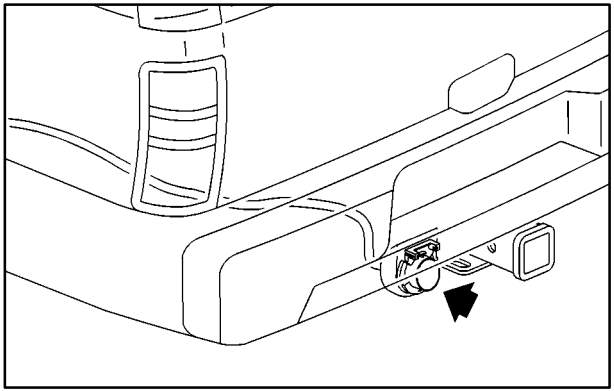

Your vehicle is equipped with the seven-wire trailer towing harness. This harness with a seven-pin universal heavy-duty trailer connector is attached to a bracket on the platform hitch.

The seven-wire harness contains the following trailer circuits:

- Yellow: Left Stop/Turn Signal
- Dark Green: Right Stop/Turn Signal
- Brown: Taillamps
- White: Ground
- Light Green: Back-up Lamps
- Red: Battery Feed
- Dark Blue: Trailer Brake

A jumper harness for an electric trailer brake controller and a trailer battery feed fuse are included with this trailering package. (See “Instrument Panel Jumper Wiring Harness” later in this section.)

If you need to tow a light-duty trailer with a standard four-way round pin connector, an adapter connector is included with the vehicle. See “Four-Wire Trailer Harness Adapter” later in this section.

Instrument Panel Jumper Wiring Harness

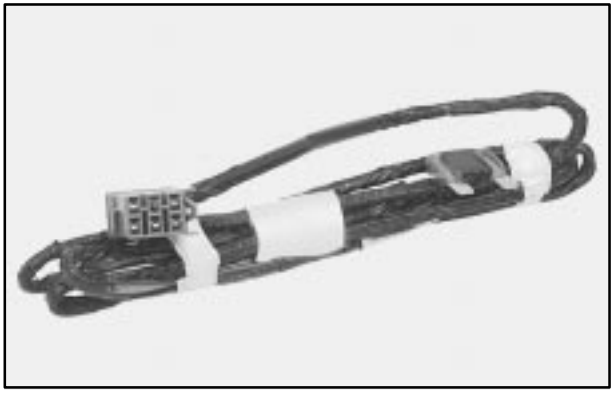

This harness is included with the heavy-duty and camper/fifth-wheel trailer wiring packages. The harness is for an electric trailer brake controller and includes a trailer battery feed fuse. This harness and fuse should be installed by your dealer or a qualified service center.

Four-Wire Trailer Harness Adapter

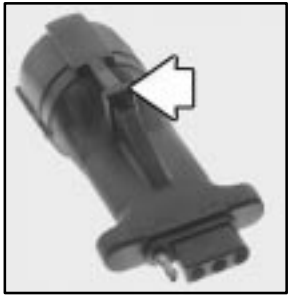

If you need to tow a light-duty trailer with a standard four-way round pin connector, an adapter is included.

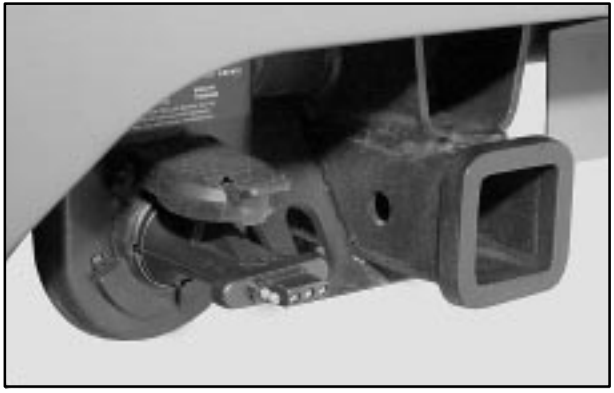

Connect the adapter with the tab (arrow) pointing towards the top. The cap on the wiring harness will lock onto the tab (arrow) and help hold the adapter in place.

Plug the four-way round pin connector onto the adapter.

Section 5 Problems on the Road

Here you'll find what to do about some problems that can occur on the road.

5-2 Hazard Warning Flashers
5-2 Other Warning Devices
5-3 Jump Starting
5-9 Towing Your Vehicle
5-9 Engine Overheating
5-12 Cooling System
5-19 Engine Fan Noise
5-19 If a Tire Goes Flat
5-20 Changing a Flat Tire
5-36 Spare Tire
5-37 If You're Stuck: In Sand, Mud, Ice or Snow

Hazard Warning Flashers

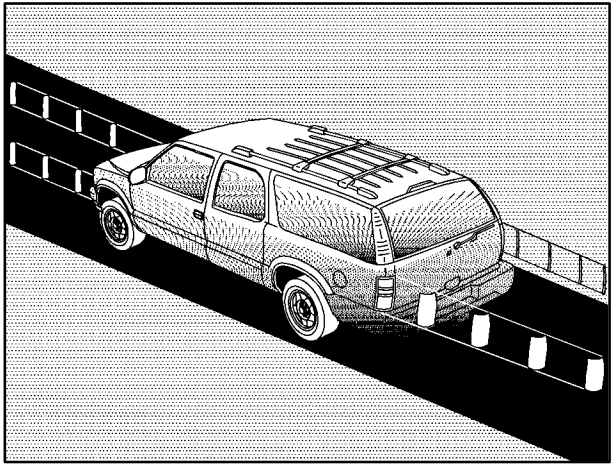

Your hazard warning flashers let you warn others. They also let police know you have a problem. Your front and rear turn signal lamps will flash on and off.

But they won't flash if you're braking.

The hazard warning flasher button is located at the top of the steering column.

Press the button to make your front and rear turn signal lamps flash on and off.

Your hazard warning flashers work no matter what position your key is in, and even if the key isn't in.

To turn off the flashers, press the button until the first click and release.

When the hazard warning flashers are on, your turn signals won't work.

Other Warning Devices

If you carry reflective triangles, you can use them to warn others. Set one up at the side of the road about 300 feet (100 m) behind your vehicle.

Jump Starting

If your battery has run down, you may want to use another vehicle and some jumper cables to start your vehicle. But please use the following steps to do it safely.

⚠ CAUTION:

Batteries can hurt you. They can be dangerous because:

- **They contain acid that can burn you.**
- **They contain gas that can explode or ignite.**
- **They contain enough electricity to burn you.**

If you don't follow these steps exactly, some or all of these things can hurt you.

NOTICE:

Ignoring these steps could result in costly damage to your vehicle that wouldn't be covered by your warranty.

The ACDelco® battery in your vehicle has a built-in hydrometer. Do not charge, test or jump start the battery if the hydrometer looks clear or light yellow. Replace the battery when there is a clear or light yellow hydrometer and a cranking complaint.

Trying to start your vehicle by pushing or pulling it won't work, and it could damage your vehicle.

1. Check the other vehicle. It must have a 12-volt battery with a negative ground system.

NOTICE:

If the other system isn't a 12-volt system with a negative ground, both vehicles can be damaged.

2. Get the vehicles close enough so the jumper cables can reach, but be sure the vehicles aren't touching each other. If they are, it could cause a ground connection you don't want. You wouldn't be able to start your vehicle, and the bad grounding could damage the electrical systems.

   To avoid the possibility of the vehicles rolling, set the parking brake firmly on both vehicles involved in the jump start procedure. Put an automatic transmission in PARK (P) or a manual transmission in NEUTRAL before setting the parking brake.

NOTICE:

If you leave your radio on, it could be badly damaged. The repairs wouldn't be covered by your warranty.

3. Turn off the ignition on both vehicles. Unplug unnecessary accessories plugged into the cigarette lighter or accessory power outlets. Turn off the radio and all lamps that aren't needed. This will avoid sparks and help save both batteries. And it could save your radio!

4. Open the hoods and locate the positive (+) and negative (-) terminal locations of the other vehicle.

   Your vehicle has a remote positive (+) jump starting terminal and a remote negative (-) jump starting terminal. You should always use these remote terminals instead of the terminals on the battery.

   The remote positive (+) terminal is located under a red plastic cover near the engine accessory drive bracket. To access the remote positive (+) terminal, open the red plastic cover.

   The remote negative (-) terminal is located on the engine accessory drive bracket and is marked "GND".

   See "Engine Compartment Overview" in the Index for more information on location.

⚠ CAUTION:

Using a match near a battery can cause battery gas to explode. People have been hurt doing this, and some have been blinded. Use a flashlight if you need more light.

Be sure the battery has enough water. You don't need to add water to the ACDelco® battery installed in every new GM vehicle. But if a battery has filler caps, be sure the right amount of fluid is there. If it is low, add water to take care of that first. If you don't, explosive gas could be present.

Battery fluid contains acid that can burn you. Don't get it on you. If you accidentally get it in your eyes or on your skin, flush the place with water and get medical help immediately.

5. Check that the jumper cables don't have loose or missing insulation. If they do, you could get a shock. The vehicles could be damaged too.

   Before you connect the cables, here are some basic things you should know. Positive (+) will go to positive (+) or to a remote positive terminal (+) if the vehicle has one. Negative (-) will go to a heavy, unpainted metal engine part or to a remote negative (-) terminal, if the vehicle has one.

   Don't connect positive (+) to negative (-) or you'll get a short that would damage the battery and maybe other parts too.

⚠ CAUTION:

Fans or other moving engine parts can injure you badly. Keep your hands away from moving parts once the engine is running.

6. Connect the red positive (+) cable to the positive (+) terminal of the dead battery. Use a remote positive (+) terminal if the vehicle has one.

7. Don’t let the other end touch metal. Connect it to the positive (+) terminal of the good battery. Use a remote positive (+) terminal if the vehicle has one.

8. Now connect the black negative (-) cable to the negative (-) terminal of the good battery. Use a remote negative (-) terminal if the vehicle has one. Your vehicle’s remote negative (-) terminal is marked GND.

Don’t let the other end touch anything until the next step. The other end of the negative (-) cable doesn’t go to the dead battery. It goes to a heavy, unpainted metal engine part or to a remote negative (-) terminal on the vehicle with the dead battery.

9. Connect the other end of the negative (-) cable at least 18 inches (45 cm) away from the dead battery, but not near engine parts that move.

The electrical connection is just as good there, and the chance of sparks getting back to the battery is much less.

10. Now start the vehicle with the good battery and run the engine for awhile.
11. Try to start the vehicle that had the dead battery. If it won't start after a few tries, it probably needs service.

NOTICE:

Damage to your vehicle may result from electrical shorting if jumper cables are removed incorrectly. To prevent electrical shorting, take care that they don't touch each other or any other metal. The repairs wouldn't be covered by your warranty.

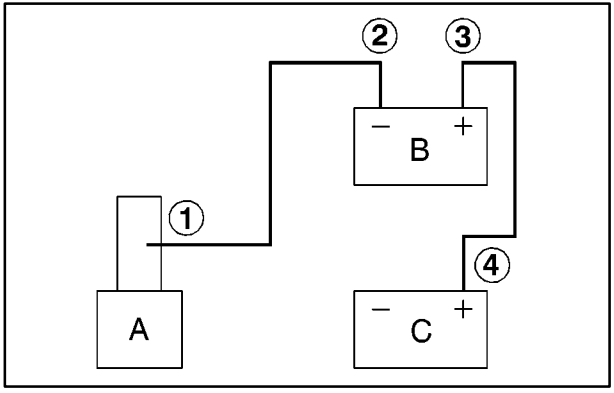

Jumper Cable Removal

A. Heavy, Unpainted Metal Engine Part or Remote Negative (-) Terminal.

B. Good Battery or Remote Positive (+) and Negative (-) Terminals.

C. Dead Battery or Remote Positive (+) Terminal.

To disconnect the jumper cables from both vehicles do the following:

1. Disconnect the black negative (-) cable from the vehicle that had the dead battery.
2. Disconnect the black negative (-) cable from the vehicle with the good battery.
3. Disconnect the red positive (+) cable from the vehicle with the good battery.
4. Disconnect the red positive (+) cable from the other vehicle.
5. Return the positive (+) remote terminal cover to its original position.

Towing Your Vehicle

Consult your dealer or a professional towing service if you need to have your disabled vehicle towed. See “Roadside Assistance” in the Index.

Engine Overheating

You will find a coolant temperature gage on your vehicle’s instrument panel. See “Engine Coolant Temperature Gage” in the Index. In addition, you will find a LOW COOLANT, CHECK COOLANT TEMP, ENGINE OVERHEATED and a REDUCED ENGINE POWER message in the message center on the instrument panel. See “Message Center” in the Index.

Overheated Engine Protection Operating Mode

If an overheated engine condition exists and the REDUCED ENGINE POWER message is displayed, an overheat protection mode which alternates firing groups of cylinders helps prevent engine damage. In this mode, you will notice a loss in power and engine performance. This operating mode allows your vehicle to be driven to a safe place in an emergency. Driving extended miles (km) and/or towing a trailer in the overheat protection mode should be avoided.

NOTICE:

After driving in the overheated engine protection operating mode, to avoid engine damage, allow the engine to cool before attempting any repair. The engine oil will be severely degraded. Repair the cause of coolant loss, change the oil and reset the oil life system. See “Engine Oil” in the Index.

If Steam Is Coming From Your Engine

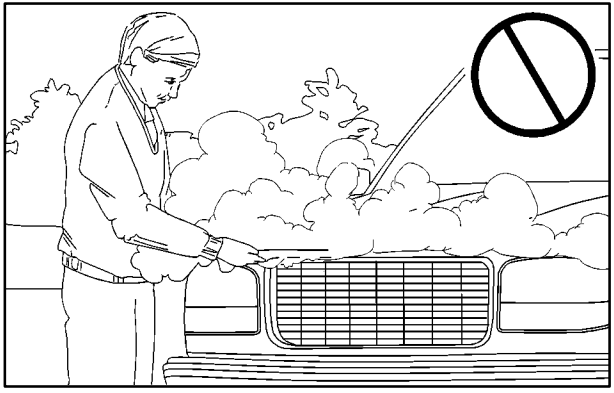

⚠ CAUTION:

Steam from an overheated engine can burn you badly, even if you just open the hood. Stay away from the engine if you see or hear steam coming from it.

CAUTION: (Continued)

CAUTION: (Continued)

Just turn it off and get everyone away from the vehicle until it cools down. Wait until there is no sign of steam or coolant before you open the hood.

If you keep driving when your engine is overheated, the liquids in it can catch fire. You or others could be badly burned. Stop your engine if it overheats, and get out of the vehicle until the engine is cool. See "Overheated Engine Protection Operating Mode" in the Index.

NOTICE:

If your engine catches fire because you keep driving with no coolant, your vehicle can be badly damaged. The costly repairs would not be covered by your warranty. See "Overheated Engine Protection Operating Mode" in the Index.

If No Steam Is Coming From Your Engine

An overheat warning, along with a low coolant message, can indicate a serious problem. See “Low Coolant Message” in the Index.

If you get an engine overheat warning but see or hear no steam, the problem may not be too serious. Sometimes the engine can get a little too hot when you:

- Climb a long hill on a hot day.
- Stop after high-speed driving.
- Idle for long periods in traffic.
- Tow a trailer. See “Driving on Grades” in the Index.

If you get the overheat warning with no sign of steam, try this for a minute or so:

1. Turn on your heater to full hot at the highest fan speed and open the window as necessary.
2. If you’re in a traffic jam, shift to NEUTRAL (N); otherwise, shift to the highest gear while driving -- DRIVE (D).

If you no longer have the overheat warning, you can drive. Just to be safe, drive slower for about 10 minutes. If the warning doesn’t come back on, you can drive normally.

If the warning continues, pull over, stop, and park your vehicle right away.

If there’s still no sign of steam, push down the accelerator until the engine speed is about twice as fast as normal idle speed for at least three minutes while you’re parked. If you still have the warning, *turn off the engine and get everyone out of the vehicle* until it cools down. Also, see “Overheated Engine Protection Operating Mode” listed previously in this section.

You may decide not to lift the hood but to get service help right away.

Cooling System

When you decide it's safe to lift the hood, here's what you'll see:

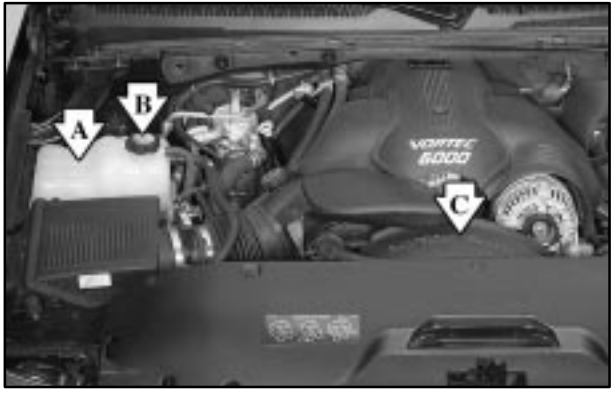

A. Coolant Surge Tank

B. Coolant Surge Tank Pressure Cap

C. Engine Fan

If the coolant inside the coolant surge tank is boiling, don't do anything else until it cools down. The vehicle should be parked on a level surface.

The coolant level should be at or above the FILL COLD mark. If it isn't, you may have a leak at the pressure cap or in the radiator hoses, heater hoses, radiator, water pump or somewhere else in the cooling system.

⚠ CAUTION:

Heater and radiator hoses, and other engine parts, can be very hot. Don't touch them. If you do, you can be burned.

Don't run the engine if there is a leak. If you run the engine, it could lose all coolant. That could cause an engine fire, and you could be burned. Get any leak fixed before you drive the vehicle.

If there seems to be no leak, start the engine again. The engine cooling fan speed should increase when idle speed is doubled by pushing the accelerator pedal down. If it doesn't, your vehicle needs service. Turn off the engine.

NOTICE:

Engine damage from running your engine without coolant isn't covered by your warranty. See "Overheated Engine Protection Operating Mode" in the Index.

NOTICE:

When adding coolant, it is important that you use only DEX-COOL® (silicate-free) coolant.

If coolant other than DEX-COOL is added to the system, premature engine, heater core or radiator corrosion may result. In addition, the engine coolant will require change sooner -- at 30,000 miles (50 000 km) or 24 months, whichever occurs first. Damage caused by the use of coolant other than DEX-COOL® is not covered by your new vehicle warranty.

How to Add Coolant to the Coolant Surge Tank

If you haven't found a problem yet, check to see if coolant is visible in the surge tank. If coolant is visible but the coolant level isn't at or above the FILL COLD mark, add a 50/50 mixture of *clean, drinkable water* and DEX-COOL® coolant at the coolant surge tank, but be sure the cooling system, including the coolant surge tank pressure cap, is cool before you do it. See "Engine Coolant" in the Index for more information.

If no coolant is visible in the surge tank, add coolant as follows:

⚠ CAUTION:

Steam and scalding liquids from a hot cooling system can blow out and burn you badly. They are under pressure, and if you turn the coolant surge tank pressure cap -- even a little -- they can come out at high speed. Never turn the cap when the cooling system, including the coolant surge tank pressure cap, is hot. Wait for the cooling system and coolant surge tank pressure cap to cool if you ever have to turn the pressure cap.

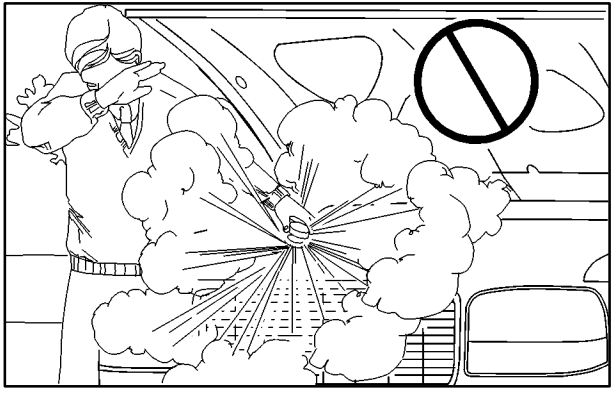

⚠ CAUTION:

Adding only plain water to your cooling system can be dangerous. Plain water, or some other liquid such as alcohol, can boil before the proper coolant mixture will. Your vehicle's coolant warning system is set for the proper coolant mixture. With plain water or the wrong mixture, your engine could get too hot but you wouldn't get the overheat warning. Your engine could catch fire and you or others could be burned. Use a 50/50 mixture of clean, drinkable water and DEX-COOL® coolant.

NOTICE:

In cold weather, water can freeze and crack the engine, radiator, heater core and other parts. So use the recommended coolant.

⚠ CAUTION:

You can be burned if you spill coolant on hot engine parts. Coolant contains ethylene glycol and it will burn if the engine parts are hot enough. Don't spill coolant on a hot engine.

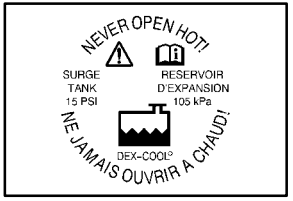

The coolant surge tank on your vehicle may be equipped with one of the two caps shown.

1. Park the vehicle on a level surface. You can remove the coolant surge tank pressure cap when the cooling system, including the coolant surge tank pressure cap and upper radiator hose, is no longer hot. Turn the pressure cap slowly counterclockwise (left) about one full turn. If you hear a hiss, wait for that to stop. A hiss means there is still some pressure left.

2. Then keep turning the pressure cap slowly, and remove it.

3. Then fill the coolant surge tank with the proper mixture, to the FILL COLD mark.

4. With the coolant surge tank pressure cap off, start the engine and let it run until you can feel the upper radiator hose getting hot. Watch out for the engine cooling fan.

   By this time, the coolant level inside the coolant surge tank may be lower. If the level is lower, add more of the proper mixture to the coolant surge tank until the level reaches FILL COLD mark.

5. Then replace the pressure cap. Be sure the pressure cap is hand-tight and fully seated.

Engine Fan Noise

Your vehicle has a clutched engine cooling fan. When the clutch is engaged, the fan spins faster to provide more air to cool the engine. In most everyday driving conditions, the fan is spinning slower and the clutch is not fully engaged. This improves fuel economy and reduces fan noise. Under heavy vehicle loading, trailer towing and/or high outside temperatures, the fan speed increases as the clutch more fully engages. So you may hear an increase in fan noise. This is normal and should not be mistaken as the transmission slipping or making extra shifts. It is merely the cooling system functioning properly. The fan will slow down when additional cooling is not required and the clutch disengages.

You may also hear this fan noise when you start the engine. It will go away as the fan clutch partially disengages.

If a Tire Goes Flat

It's unusual for a tire to "blow out" while you're driving, especially if you maintain your tires properly. If air goes out of a tire, it's much more likely to leak out slowly. But if you should ever have a "blowout," here are a few tips about what to expect and what to do:

If a front tire fails, the flat tire will create a drag that pulls the vehicle toward that side. Take your foot off the accelerator pedal and grip the steering wheel firmly. Steer to maintain lane position, and then gently brake to a stop well out of the traffic lane.

A rear blowout, particularly on a curve, acts much like a skid and may require the same correction you'd use in a skid. In any rear blowout, remove your foot from the accelerator pedal. Get the vehicle under control by steering the way you want the vehicle to go. It may be very bumpy and noisy, but you can still steer. Gently brake to a stop -- well off the road if possible.

If a tire goes flat, the next part shows how to use your jacking equipment to change a flat tire safely.

Changing a Flat Tire

If a tire goes flat, avoid further tire and wheel damage by driving slowly to a level place. Turn on your hazard warning flashers.

⚠ CAUTION:

Changing a tire can cause an injury. The vehicle can slip off the jack and roll over you or other people. You and they could be badly injured. Find a level place to change your tire. To help prevent the vehicle from moving:

1. **Set the parking brake firmly.**
2. **Put the shift lever in PARK (P).**
3. **Turn off the engine.**
4. **Put the wheel blocks at the front and rear of the tire farthest away from the one being changed. That would be the tire on the other side of the vehicle, at the opposite end.**

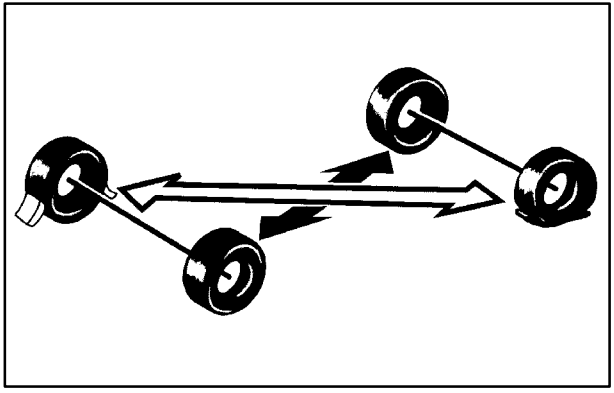

The following steps will tell you how to use the jack and change a tire.

Removing the Spare Tire and Tools

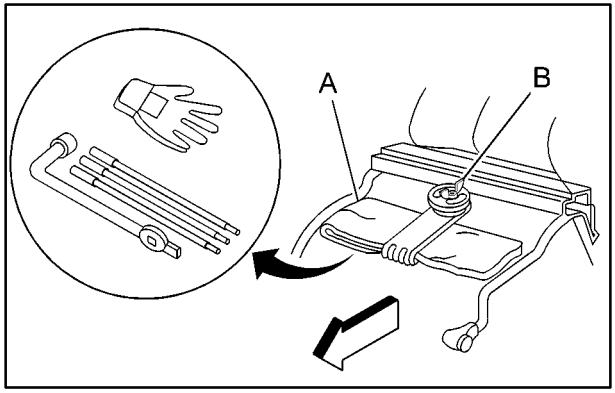

Yukon Denali Models (Under Driver's Side Rear Seat)

A. Tool Kit with Jack Tools and Gloves
B. Bracket and Wing Nut

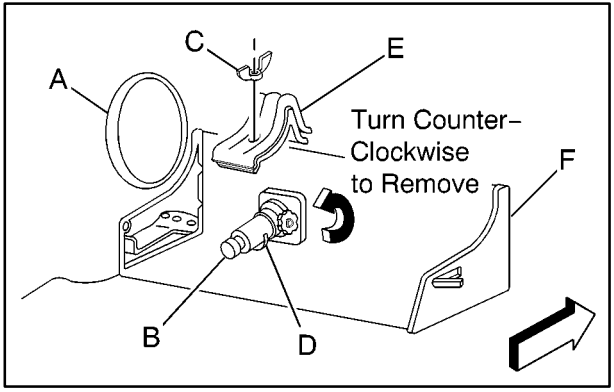

Yukon Denali Models (Rear Access Panel)

A. Speaker
B. Bottle Jack
C. Wing Nut
D. Retaining Hook
E. Tire Blocks
F. Cover Panel

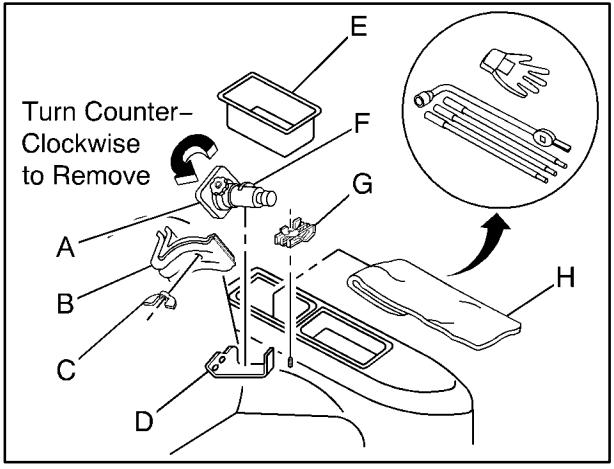

Yukon XL Denali Models

A. Bottle Jack
B. Wheel Blocks
C. Wing Nut
D. Mounting Bracket
E. Removable Tray
F. Retaining Hook
G. Retaining Bracket and Wing Nut
H. Tool Kit with Jack Tools and Gloves

Yukon Denali: The equipment you'll need is located under the second row passenger's seat on the driver's side of the vehicle, and behind the left trim panel on the driver's side of the vehicle. Skip the first step and follow the last three.

Yukon XL Denali: The equipment you'll need is located under the storage tray in the rear trim panel on the driver's side of the vehicle.

1. Remove the tray to access the tools.
2. There is a wing nut used to retain the tool kit. To remove it, turn the wing nut counterclockwise.
3. To release the bottle jack from its holder, turn the knob on the bottle jack counterclockwise to lower the jack head.
4. The wheel blocks and the wheel block retainer can be removed by turning the wing nut counterclockwise.

You'll use the jack handle extensions and the wheel wrench to remove the underbody-mounted spare tire.

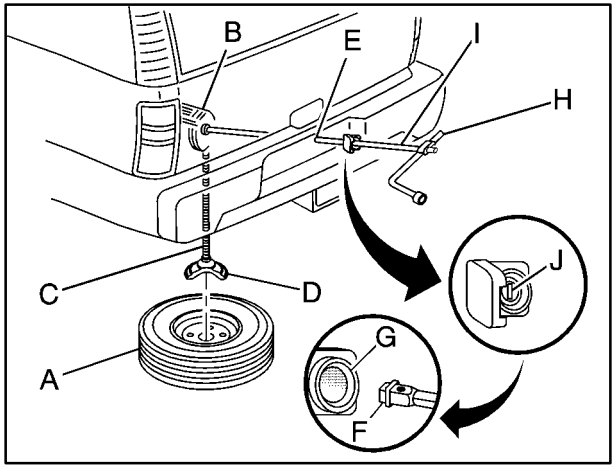

A. Spare Tire (Valve Stem Pointed Up)
B. Hoist Assembly
C. Hoist Cable
D. Tire Retainer
E. Hoist Shaft
F. Hoist End of Extension Tool
G. Hoist Shaft Access Hole
H. Wheel Wrench
I. Jack Handle Extensions
J. Hoist Lock

1. Your vehicle is equipped with a hoist lock (J). To unlock it, open the spare tire lock cover on the bumper and use the ignition key to remove the lock.

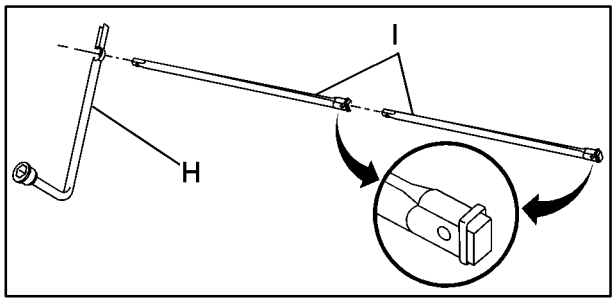

2. Assemble the wheel wrench (H) and the two jack handle extensions (I) as shown.

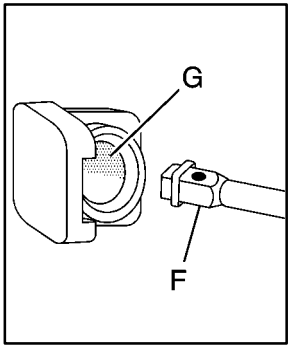

3. Insert the hoist end (open end) (F) of the extension through the hole (G) in the rear bumper.

Be sure the hoist end of the extension connects into the hoist shaft (E). The ribbed square end of the extension is used to lower the spare tire.

4. Turn the wheel wrench (H) counterclockwise to lower the spare tire to the ground. Continue to turn the wheel wrench until the spare tire can be pulled out from under the vehicle.

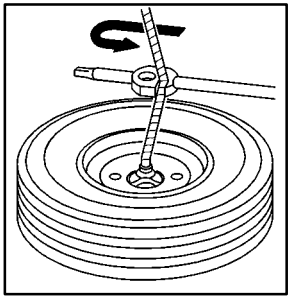

5. The wheel wrench has a hook that allows you to pull the hoist cable towards you to assist in reaching the spare tire.

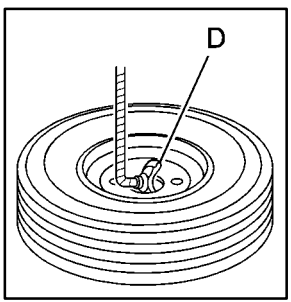

6. When the tire has been lowered, tilt the retainer (D) at the end of the cable so it can be pulled up through the wheel opening.

7. Put the spare tire near the flat tire.

Use the following pictures and instructions to remove the flat tire and raise the vehicle.

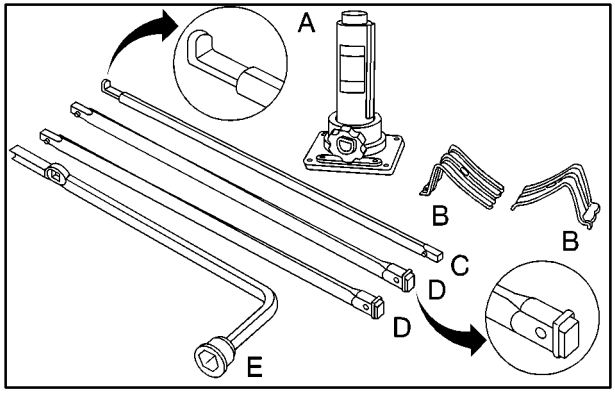

The tools you'll be using include the bottle jack (A), the wheel blocks (B), the jack handle (C), the jack handle extensions (D), and the wheel wrench (E).

If the flat tire is on a rear tire of the vehicle, you'll need to use both jack handle extensions.

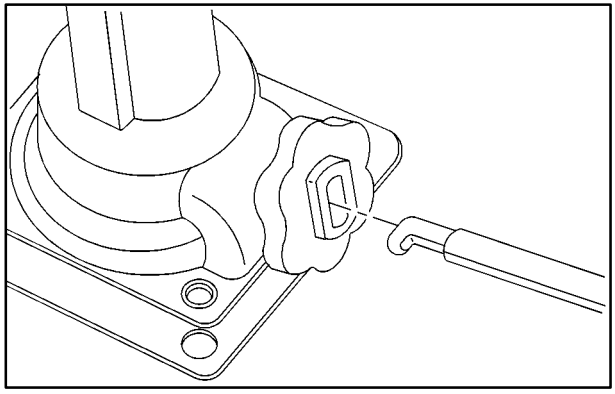

Attach the wheel wrench to the jack handle extensions (as needed). Attach the jack handle to the jack.

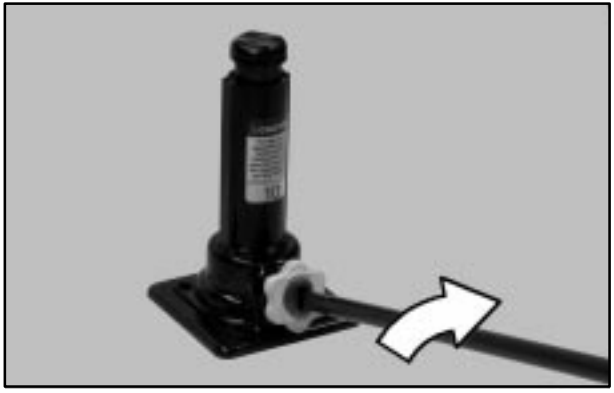

Turn the wheel wrench clockwise to raise the jack lift head to the lifting point.

To remove the center cap place the chisel end of the wheel wrench in the slot on the wheel and gently pry out.

Removing the Flat Tire and Installing the Spare Tire

1. Use the wheel wrench to loosen all the wheel nuts. Turn the wheel wrench counterclockwise to loosen the wheel nuts. Don't remove the wheel nuts yet.

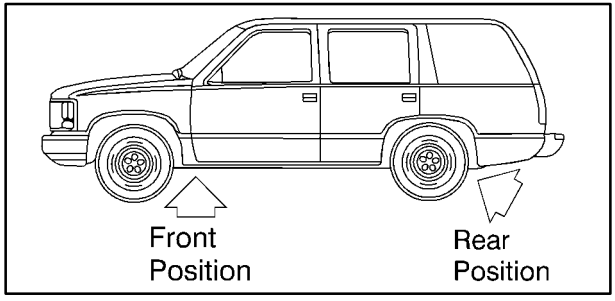

Jack Positions (overall view)

These locations are the general area of jack placement. See text and art following for the exact jack placement.

⚠ CAUTION:

Getting under a vehicle when it is jacked up is dangerous. If the vehicle slips off the jack, you could be badly injured or killed. Never get under a vehicle when it is supported only by a jack.

⚠ CAUTION:

Raising your vehicle with the jack improperly positioned can damage the vehicle and even make the vehicle fall. To help avoid personal injury and vehicle damage, be sure to fit the jack lift head into the proper location before raising the vehicle.

2. Position the jack under the vehicle.

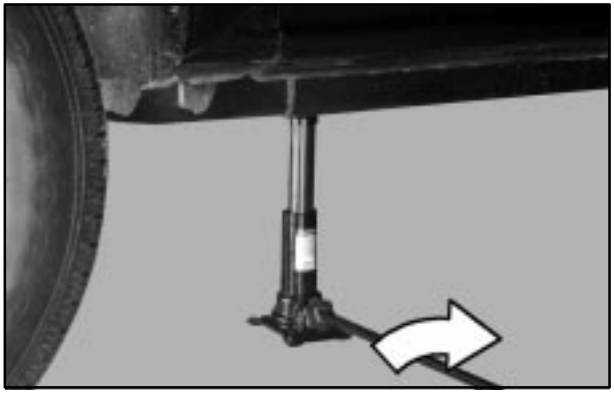

Front Position

Front Tire Flat: Position the jack on the frame behind the flat tire where the frame sections overlap. Raise the vehicle far enough off the ground so there is enough room for the spare tire to fit clear the ground.

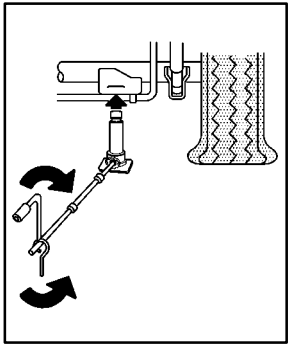

Rear Position

Rear Tire Flat: Use the jacking pad provided on the rear axle. Turn the wheel wrench clockwise to raise the vehicle. Raise the vehicle far enough off the ground so there is enough room for the spare tire to clear the ground.

3. Remove all the wheel nuts and take off the flat tire.

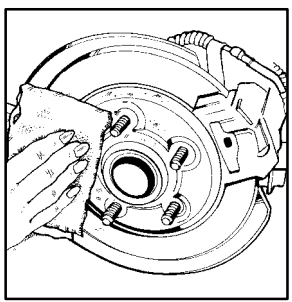

4. Remove any rust or dirt from the wheel bolts, mounting surfaces and spare wheel.

⚠ CAUTION:

Rust or dirt on the wheel, or on the parts to which it is fastened, can make the wheel nuts become loose after a time. The wheel could come off and cause an accident. When you change a wheel, remove any rust or dirt from the places where the wheel attaches to the vehicle. In an emergency, you can use a cloth or a paper towel to do this; but be sure to use a scraper or wire brush later, if you need to, to get all the rust or dirt off.

⚠ CAUTION:

Never use oil or grease on studs or nuts. If you do, the nuts might come loose. Your wheel could fall off, causing a serious accident.

5. After mounting the spare, put the wheel nuts back on with the rounded end of the nuts toward the wheel. Tighten each wheel nut by hand. Then use the wheel wrench to tighten the nuts until the wheel is held against the hub.

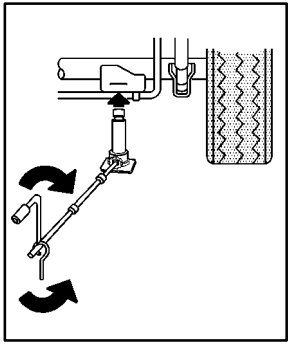

Rear Position

6. Turn the wheel wrench counterclockwise to lower the vehicle. Lower the jack completely.

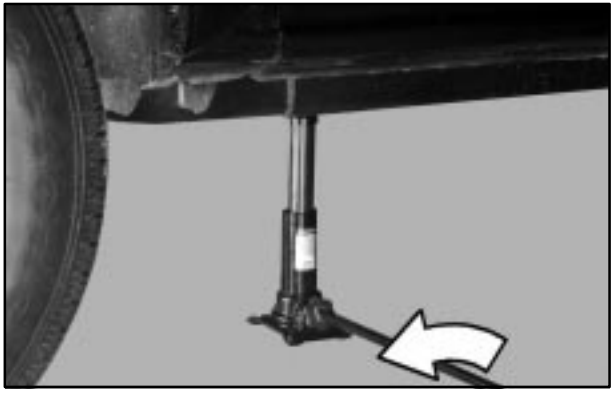

Front Position

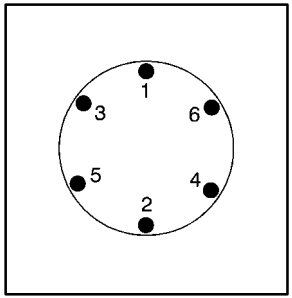

7. Tighten the nuts firmly in a crisscross sequence as shown by turning the wheel wrench clockwise.

⚠ CAUTION:

Incorrect wheel nuts or improperly tightened wheel nuts can cause the wheel to become loose and even come off. This could lead to an accident. Be sure to use the correct wheel nuts. If you have to replace them, be sure to get new GM original equipment wheel nuts.

Stop somewhere as soon as you can and have the nuts tightened with a torque wrench to the proper torque. See “Capacities and Specifications” in the Index.

NOTICE:

Improperly tightened wheel nuts can lead to brake pulsation and rotor damage. To avoid expensive brake repairs, evenly tighten the wheel nuts in the proper sequence and to the proper torque specification.

When you reinstall the regular wheel and tire, you must also reinstall the center cap. Place the cap on the wheel and tap it into place until it seats flush with the wheel.

Storing a Flat or Spare Tire and Tools

⚠ CAUTION:

Storing a jack, a tire or other equipment in the passenger compartment of the vehicle could cause injury. In a sudden stop or collision, loose equipment could strike someone. Store all these in the proper place.

Store the tire under the rear of the vehicle in the spare tire carrier. Use the art and text following to help you:

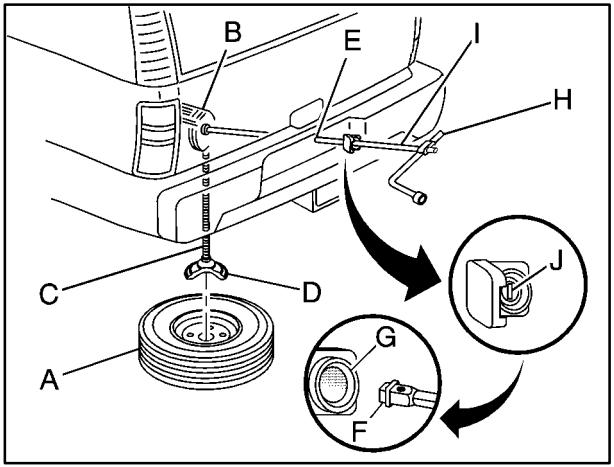

A. Spare Tire (Valve Stem Pointed Up)
B. Hoist Assembly
C. Hoist Cable
D. Tire Retainer
E. Hoist Shaft
F. Hoist End of Extension Tool
G. Hoist Shaft Access Hole
H. Wheel Wrench
I. Jack Handle Extensions
J. Hoist Lock

1. Put the tire on the ground at the rear of the vehicle with the valve stem pointed upward.

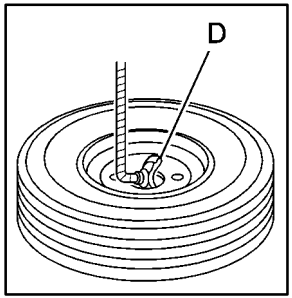

2. Tilt the retainer (D) downward and through the wheel opening. Make sure the retainer is fully seated across the underside of the wheel.

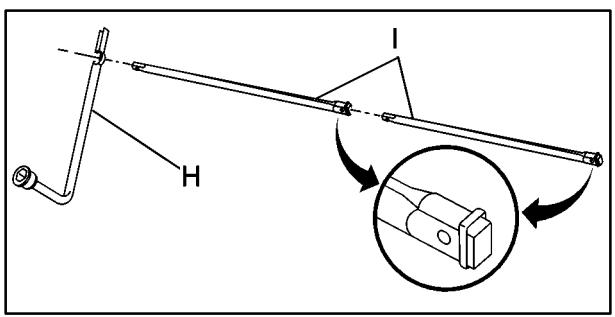

3. Attach the wheel wrench (H) and extensions (I) together.

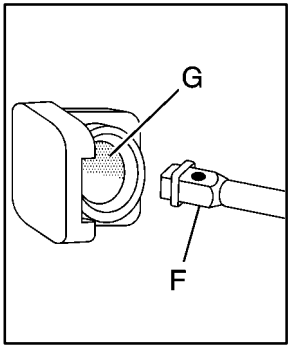

4. Insert the hoist end (F) through the hole (G) in the rear bumper and into the hoist shaft.

5. Raise the tire part way upward. Make sure the retainer is seated in the wheel opening.

6. Raise the tire fully against the underside of the vehicle. Continue turning the wheel wrench until the tire is secure and the cable is tight. The spare tire hoist cannot be overtightened.

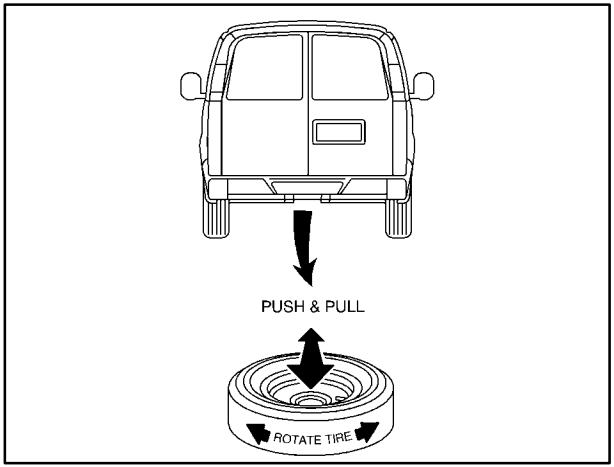

7. Make sure the tire is stored securely. Push, pull, and then try to rotate or turn the tire. If the tire moves, use the wheel wrench to tighten the cable.

Replace the jack, tools and spare tire lock.

To store the tools, follow these procedures:

For Yukon Denali Models:

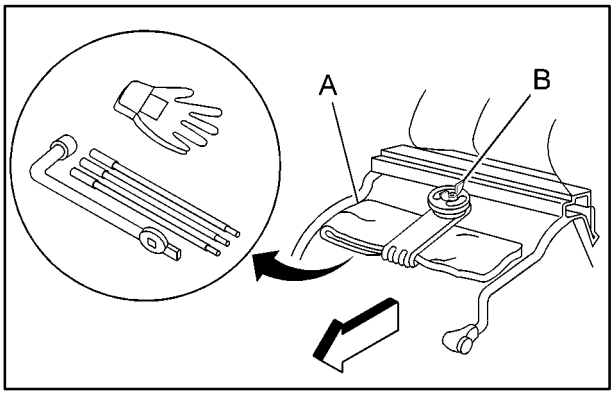

Yukon Denali Models (Under Driver's Side Rear Seat)

A. Tool Kit with Jack Tools and Gloves

B. Bracket and Wing Nut

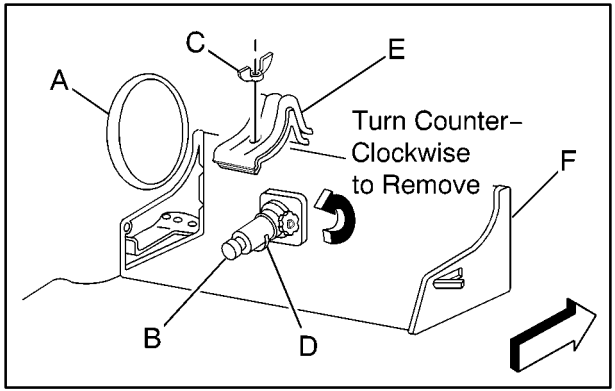

Yukon Denali Models (Rear Access Panel)

A. Speaker
B. Bottle Jack
C. Wing Nut
D. Retaining Hook
E. Tire Blocks
F. Cover Panel

1. Put the tool kit, with the jack tools and gloves, in the tool bag and place in the retaining bracket under the second row passenger's seat on the driver's side of the vehicle.
2. Tighten down with the wing nut.
3. Then, assemble tire blocks (E) and bottle jack (B) together with the wing nut and retaining hook (D).
4. Position behind the jack storage cover in the rear side panel on the driver's side of the vehicle just below the speaker (A) and tighten, adjusting clockwise until the jack is secured tight in the mounting bracket.

For Yukon XL Denali Models:

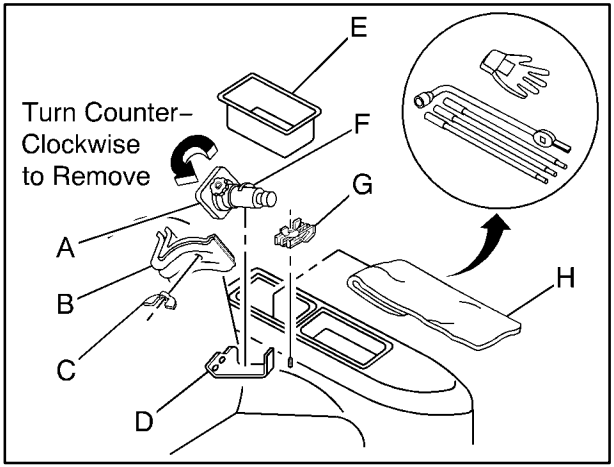

Yukon XL Denali Models

A. Bottle Jack
B. Wheel Blocks
C. Wing Nut
D. Mounting Bracket
E. Removable Tray
F. Retaining Hook
G. Retaining Bracket and Wing Nut
H. Tool Kit with Jack Tools and Gloves

1. Return the tool kit to the tool bag (H) and place them back in the side storage box.
2. Assemble wheel blocks and bottle jack (A) together with the wing nut (C).

Spare Tire

Your vehicle, when new, had a fully inflated spare tire. A spare tire may lose air over time, so check its inflation pressure regularly. See “Inflation-Tire Pressure” and “Loading Your Vehicle” in the Index for information regarding proper tire inflation and loading your vehicle. For instruction on how to remove, install or store a spare tire, see “Changing a Flat Tire” in the Index.

After installing the spare tire on your vehicle, you should stop as soon as possible and make sure the spare is correctly inflated. Have the damaged or flat road tire repaired or replaced as soon as you can and installed back onto your vehicle. This way, a spare tire will be available in case you need it again.

If your vehicle has a spare tire that does not match your vehicle’s original road tires and wheels in size and type, do not include the spare in the tire rotation.

If You're Stuck: In Sand, Mud, Ice or Snow

In order to free your vehicle when it is stuck, you will need to spin the wheels, but you don't want to spin your wheels too fast. The method known as "rocking" can help you get out when you're stuck, but you must use caution.

⚠ CAUTION:

If you let your tires spin at high speed, they can explode, and you or others could be injured. And, the transmission or other parts of the vehicle can overheat. That could cause an engine compartment fire or other damage. When you're stuck, spin the wheels as little as possible. Don't spin the wheels above 35 mph (55 km/h) as shown on the speedometer.

NOTICE:

Spinning your wheels can destroy parts of your vehicle as well as the tires. If you spin the wheels too fast while shifting your transmission back and forth, you can destroy your transmission.

For information about using tire chains on your vehicle, see "Tire Chains" in the Index.

Rocking Your Vehicle To Get It Out

First, turn your steering wheel left and right. That will clear the area around your front wheels. Then shift back and forth between REVERSE (R) and a forward gear, spinning the wheels as little as possible. Release the accelerator pedal while you shift, and press lightly on the accelerator pedal when the transmission is in gear. By slowly spinning your wheels in the forward and reverse directions, you will cause a rocking motion that may free your vehicle. If that doesn't get you out after a few tries, you may need to be towed out. Or, you can use your recovery hooks if your vehicle has them. If you do need to be towed out, see "Towing Your Vehicle" in the Index.

Using the Recovery Hooks

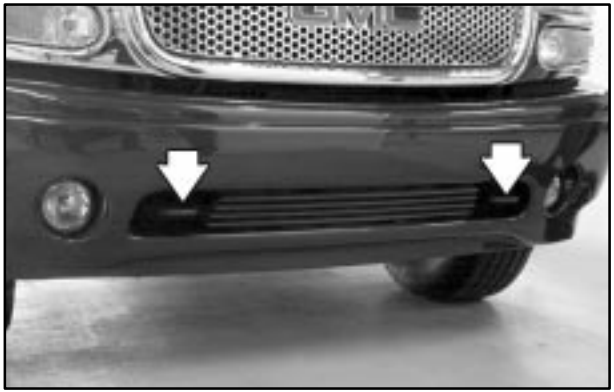

Your vehicle is equipped with recovery hooks. The hooks are provided at the front of your vehicle. You may need to use them if you're stuck off-road and need to be pulled to some place where you can continue driving.

⚠ CAUTION:

These hooks, when used, are under a lot of force. Always pull the vehicle straight out. Never pull on the hooks at a sideways angle. The hooks could break off and you or others could be injured from the chain or cable snapping back.

NOTICE:

Never use the recovery hooks to tow the vehicle. Your vehicle could be damaged and it would not be covered by warranty.

Section 6 Service and Appearance Care

Here you will find information about the care of your vehicle. This section begins with service and fuel information, and then it shows how to check important fluid and lubricant levels. There is also technical information about your vehicle, and a part devoted to its appearance care.

6-2 Service
6-3 Fuel
6-5 Fuels in Foreign Countries
6-6 Filling Your Tank
6-8 Filling a Portable Fuel Container
6-8 Checking Things Under the Hood
6-11 Engine Oil
6-17 Engine Air Cleaner/Filter
6-19 Passenger Compartment Air Filter
6-20 Automatic Transmission Fluid
6-23 Rear Axle
6-24 All-Wheel Drive
6-26 Engine Coolant
6-29 Coolant Surge Tank Pressure Cap
6-30 Power Steering Fluid
6-31 Windshield Washer Fluid
6-32 Brakes
6-36 Battery
6-37 Bulb Replacement
6-41 Windshield Wiper Blade Replacement
6-42 Tires
6-51 Appearance Care
6-51 Cleaning the Inside of Your Vehicle
6-55 Cleaning the Outside of Your Vehicle
6-59 GM Vehicle Care/Appearance Materials
6-60 Vehicle Identification Number (VIN)
6-61 Electrical System
6-69 Replacement Bulbs
6-70 Capacities and Specifications
6-71 Normal Maintenance Replacement Parts

Service

Your dealer knows your vehicle best and wants you to be happy with it. We hope you'll go to your dealer for all your service needs. You'll get genuine GM parts and GM-trained and supported service people.

We hope you'll want to keep your GM vehicle all GM. Genuine GM parts have one of these marks:

Doing Your Own Service Work

If you want to do some of your own service work, you'll want to use the proper service manual. It tells you much more about how to service your vehicle than this manual can. To order the proper service manual, see "Service and Owner Publications" in the Index.

Your vehicle has an air bag system. Before attempting to do your own service work, see "Servicing Your Air Bag-Equipped Vehicle" in the Index.

You should keep a record with all parts receipts and list the mileage and the date of any service work you perform. See "Maintenance Record" in the Index.

⚠ CAUTION:

You can be injured and your vehicle could be damaged if you try to do service work on a vehicle without knowing enough about it.

- **Be sure you have sufficient knowledge, experience, the proper replacement parts and tools before you attempt any vehicle maintenance task.**
- **Be sure to use the proper nuts, bolts and other fasteners. "English" and "metric" fasteners can be easily confused. If you use the wrong fasteners, parts can later break or fall off. You could be hurt.**

Adding Equipment to the Outside of Your Vehicle

Things you might add to the outside of your vehicle can affect the airflow around it. This may cause wind noise and affect windshield washer performance. Check with your dealer before adding equipment to the outside of your vehicle.

Fuel

Gasoline Octane

Use regular unleaded gasoline with a posted octane of 87 or higher. If the octane is less than 87, you may get a heavy knocking noise when you drive. If it is bad enough, it can damage your engine. A little pinging noise when you accelerate or drive uphill is considered normal. This does not indicate a problem exists or that a higher-octane fuel is necessary.

Gasoline Specifications

It is recommended that gasoline meet specifications which were developed by the American Automobile Manufacturers Association and endorsed by the Canadian Vehicle Manufacturers' Association for better vehicle performance and engine protection. Gasolines meeting these specifications could provide improved driveability and emission control system performance compared to other gasolines.

In Canada, look for the “Auto Makers’ Choice” label on the pump.

Canada Only

California Fuel

If your vehicle is certified to meet California Emission Standards (see the underhood emission control label), it is designed to operate on fuels that meet California specifications. If this fuel is not available in states adopting California emissions standards, your vehicle will operate satisfactorily on fuels meeting federal specifications, but emission control system performance may be affected. The malfunction indicator lamp may turn on (see “Malfunction Indicator Lamp” in the Index) and your vehicle may fail a smog-check test.

If this occurs, return to your authorized GM dealer for diagnosis. If it is determined that the condition is caused by the type of fuel used, repairs may not be covered by your warranty.

Additives

Some gasolines that are not reformulated for low emissions may contain an octane-enhancing additive called methylcyclopentadienyl manganese tricarbonyl (MMT); ask the attendant where you buy gasoline whether the fuel contains MMT. General Motors does not recommend the use of such gasolines. Fuels containing MMT can reduce the life of spark plugs and the performance of the emission control system may be affected. The malfunction indicator lamp may turn on. If this occurs, return to your authorized GM dealer for service.

To provide cleaner air, all gasolines in the United States are now required to contain additives that will help prevent engine and fuel system deposits from forming, allowing your emission control system to work properly. You should not have to add anything to your fuel. Gasolines containing oxygenates, such as ethers and ethanol, and reformulated gasolines may be available in your area to contribute to clean air. General Motors recommends that you use these gasolines, particularly if they comply with the specifications described earlier.

NOTICE:

Your vehicle was not designed for fuel that contains methanol. Don't use fuel containing methanol. It can corrode metal parts in your fuel system and also damage plastic and rubber parts. That damage wouldn't be covered under your warranty.

Fuels in Foreign Countries

If you plan on driving in another country outside the United States or Canada, the proper fuel may be hard to find. Never use leaded gasoline or any other fuel not recommended in the previous text on fuel. Costly repairs caused by use of improper fuel wouldn't be covered by your warranty.

To check on fuel availability, ask an auto club, or contact a major oil company that does business in the country where you'll be driving.

Filling Your Tank

⚠ CAUTION:

Gasoline vapor is highly flammable. It burns violently, and that can cause very bad injuries. Don't smoke if you're near gasoline or refueling your vehicle. Keep sparks, flames and smoking materials away from gasoline.

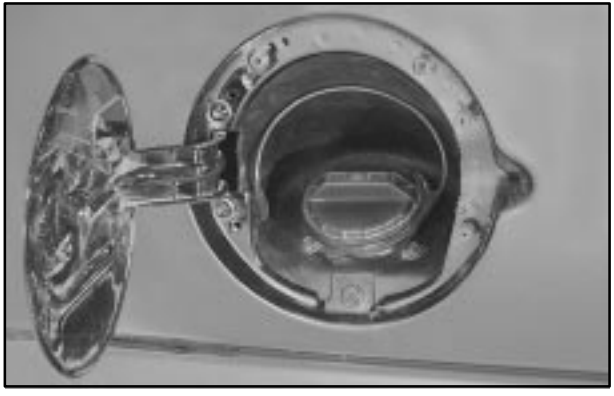

The fuel cap is located on the driver's side of your vehicle.

While refueling, hang the fuel cap by the tether using the hook located on the inside of the filler door.

To remove the fuel cap, turn it slowly to the left (counterclockwise).

⚠ CAUTION:

If you get gasoline on yourself and then something ignites it, you could be badly burned. Gasoline can spray out on you if you open the fuel cap too quickly. This spray can happen if your tank is nearly full, and is more likely in hot weather. Open the fuel cap slowly and wait for any "hiss" noise to stop. Then unscrew the cap all the way.

Be careful not to spill gasoline. Clean gasoline from painted surfaces as soon as possible. See "Cleaning the Outside of Your Vehicle" in the Index.

When you put the fuel cap back on, turn it to the right (clockwise) until you hear a clicking sound. Make sure you fully install the cap. The diagnostic system can determine if the fuel cap has been left off or improperly installed. This would allow fuel to evaporate into the atmosphere. See "Malfunction Indicator Lamp" in the Index.

NOTICE:

If you need a new fuel cap, be sure to get the right type. Your dealer can get one for you. If you get the wrong type, it may not fit properly. This may cause your malfunction indicator lamp to light and may damage your fuel tank and emissions system. See "Malfunction Indicator Lamp" in the Index.

Filling a Portable Fuel Container

⚠ CAUTION:

Never fill a portable fuel container while it is in your vehicle. Static electricity discharge from the container can ignite the gasoline vapor. You can be badly burned and your vehicle damaged if this occurs. To help avoid injury to you and others:

- **Dispense gasoline only into approved containers.**
- **Do not fill a container while it is inside a vehicle, in a vehicle's trunk, pickup bed or on any surface other than the ground.**
- **Bring the fill nozzle in contact with the inside of the fill opening before operating the nozzle. Contact should be maintained until the filling is complete.**
- **Don't smoke while pumping gasoline.**

Checking Things Under the Hood

⚠ CAUTION:

Things that burn can get on hot engine parts and start a fire. These include liquids like fuel, oil, coolant, brake fluid, windshield washer and other fluids, and plastic or rubber. You or others could be burned. Be careful not to drop or spill things that will burn onto a hot engine.

Hood Release

To open the hood, do the following:

1. Pull the handle located inside the vehicle to the lower left of the steering wheel.

2. Then go to the front of the vehicle and pull up on the secondary hood release, located near the center of the grill.
3. Lift the hood.

Engine Compartment Overview

When you open the hood on the VORTEC 6000 V8 engine you will see the following:

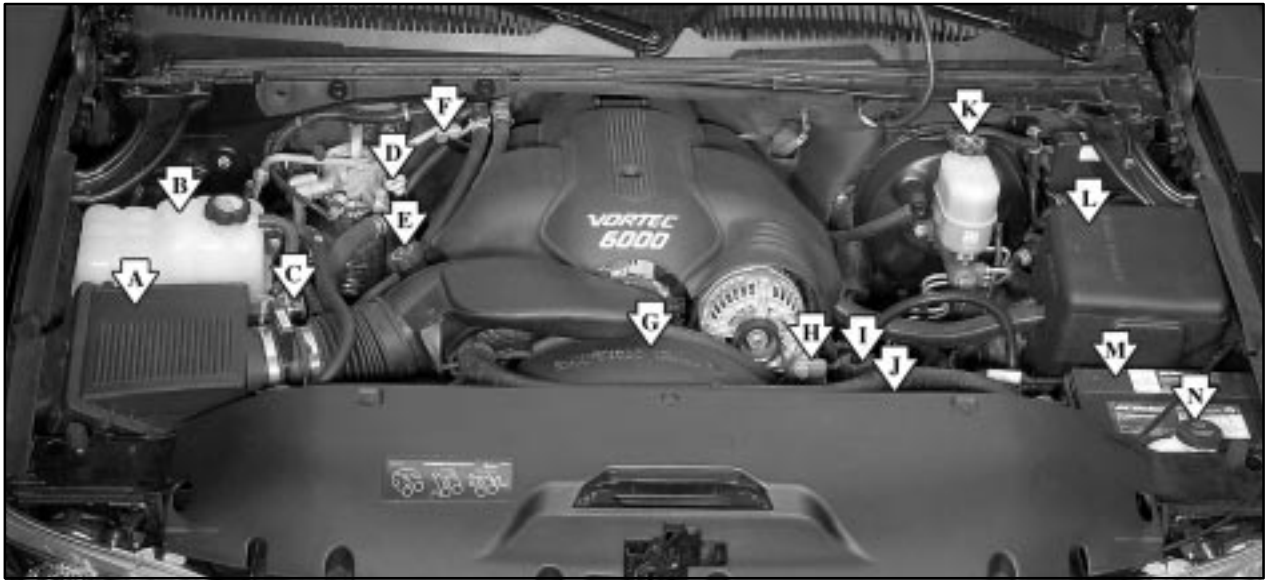

A. Engine Air Cleaner/Filter

B. Coolant Surge Tank

C. Air Filter Restriction Indicator

D. Engine Oil Dipstick

E. Engine Oil Fill

F. Automatic Transmission Dipstick

G. Fan

H. Remote Negative (-) Terminal (GND)

I. Remote Positive (+) Terminal

J. Power Steering Fluid Reservoir (Out of View)

K. Brake Master Cylinder Reservoir

L. Underhood Fuse Block

M. Battery

N. Windshield Washer Fluid Reservoir

Before closing the hood, be sure all filler caps are on properly. Pull down the hood and close it firmly.

Engine Oil

CHECK
ENG OIL
LEVEL

If the CHECK ENG OIL LEVEL message appears on the instrument cluster, it means you need to check your engine oil level right away.

For more information, see “CHECK ENG OIL LEVEL” in the Index.

You should check your engine oil level regularly; this is an added reminder.

Checking Engine Oil

It's a good idea to check your engine oil every time you get fuel. In order to get an accurate reading, the oil must be warm and the vehicle must be on level ground.

The engine oil dipstick is a loop handle and is located in the engine compartment on the passenger's side of the vehicle. See "Engine Compartment Overview" in the Index for more information on location.

Turn off the engine and give the oil several minutes to drain back into the oil pan. If you don't, the oil dipstick might not show the actual level.

Pull out the dipstick and clean it with a paper towel or cloth, then push it back in all the way. Remove it again, keeping the tip down, and check the level.

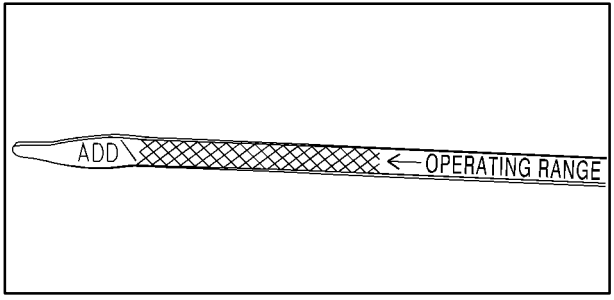

When to Add Engine Oil

If the oil is at or below the ADD mark, then you'll need to add at least one quart of oil. But you must use the right kind. This part explains what kind of oil to use. For engine oil crankcase capacity, see "Capacities and Specifications" in the Index.

NOTICE:

Don't add too much oil. If your engine has so much oil that the oil level gets above the cross-hatched area that shows the proper operating range, your engine could be damaged.

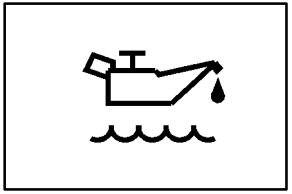

Your vehicle may have an engine oil fill cap with text and a graphic or just a graphic as shown.

The engine oil fill cap is located on the valve cover on the passenger's side of the vehicle. See "Engine Compartment Overview" in the Index for further location information.

Be sure to fill it enough to put the level somewhere in the proper operating range. Push the dipstick all the way back in when you're through.

What Kind of Engine Oil to Use

Oils recommended for your vehicle can be identified by looking for the starburst symbol.

This symbol indicates that the oil has been certified by the American Petroleum Institute (API). Do not use any oil which does not carry this starburst symbol.

If you change your own oil, be sure you use oil that has the starburst symbol on the front of the oil container. If you have your oil changed for you, be sure the oil put into your engine is American Petroleum Institute certified for gasoline engines.

You should also use the proper viscosity oil for your vehicle, as shown in the following chart:

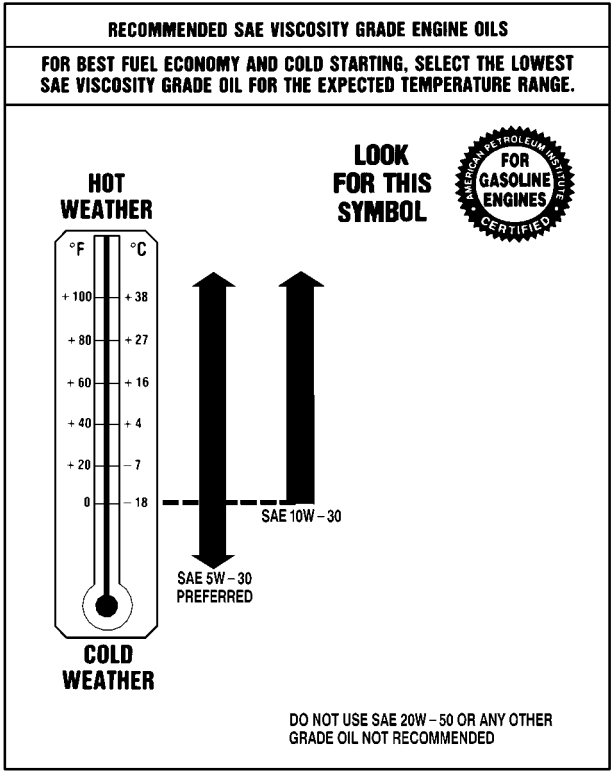

As in the chart shown previously, SAE 5W-30 is best for your vehicle. However, you can use SAE 10W-30 if it's going to be 0°F (-18°C) or above. These numbers on an oil container show its viscosity, or thickness. Do not use other viscosity oils, such as SAE 20W-50.

NOTICE:

Use only engine oil with the American Petroleum Institute Certified For Gasoline Engines starburst symbol. Failure to use the recommended oil can result in engine damage not covered by your warranty.

GM Goodwrench® oil meets all the requirements for your vehicle.

If you are in an area where the temperature falls below -20°F (-29°C), consider using either an SAE 5W-30 synthetic oil or an SAE 0W-30 oil. Both will provide easier cold starting and better protection for your engine at extremely low temperatures.

Engine Oil Additives

Don't add anything to your oil. The recommended oils with the starburst symbol are all you will need for good performance and engine protection.

When to Change Engine Oil (GM Oil Life System™)

Your vehicle has a computer system that lets you know when to change the engine oil and filter. This is based on engine revolutions and engine temperature, and not on mileage. Based on driving conditions, the mileage at which an oil change will be indicated can vary considerably. For the oil life system to work properly, you must reset the system every time the oil is changed.

When the system has calculated that oil life has been diminished, it will indicate that an oil change is necessary. A CHANGE ENGINE OIL message will come on. Change your oil as soon as possible within the next two times you stop for fuel. It is possible that, if you are driving under the best conditions, the oil life system may not indicate that an oil change is necessary for over a year. However, your engine oil and filter must be changed at least once a year and at this time the system must be reset. It is also important to check your oil regularly and keep it at the proper level.

If the system is ever reset accidentally, you must change your oil at 3,000 miles (5 000 km) since your last oil change. Remember to reset the oil life system whenever the oil is changed.

How to Reset the CHANGE ENGINE OIL Message

The GM Oil Life System™ calculates when to change your engine oil and filter based on vehicle use. Anytime your oil is changed, reset the system so it can calculate when the next oil change is required. If a situation occurs where you change your oil prior to a CHANGE ENGINE OIL message being turned on, reset the system.

To reset the CHANGE ENGINE OIL message, do the following:

1. Turn the ignition key to RUN with the engine off.
2. Fully press and release the accelerator pedal three times within five seconds.
3. If the CHANGE ENGINE OIL message flashes for five seconds, the system is reset.

If the system does not reset, try the procedure once again. If it still does not reset, see your dealer for service.

What to Do with Used Oil

Used engine oil contains certain elements that may be unhealthy for your skin and could even cause cancer. Don't let used oil stay on your skin for very long. Clean your skin and nails with soap and water, or a good hand cleaner. Wash or properly throw away clothing or rags containing used engine oil. See the manufacturer's warnings about the use and disposal of oil products.

Used oil can be a threat to the environment. If you change your own oil, be sure to drain all the oil from the filter before disposal. Never dispose of oil by putting it in the trash, pouring it on the ground, into sewers, or into streams or bodies of water. Instead, recycle it by taking it to a place that collects used oil. If you have a problem properly disposing of your used oil, ask your dealer, a service station or a local recycling center for help.

Engine Air Cleaner/Filter

The engine air cleaner/filter assembly has an air filter restriction indicator that lets you know when the engine air cleaner/filter is dirty and needs to be serviced. The air filter restriction indicator is located on the air filter assembly cover. See “Engine Compartment Overview” in the Index for more information on location.

See “Owner Checks and Services” in the Index to determine when to check the air filter restriction indicator.

The service window (A) with the percentage scale shows the amount of engine air cleaner/filter life used.

When both service window (A) and service window (B) turn orange, replace the engine air cleaner/filter.

After changing the engine air cleaner/filter, press the button on top of the air filter restriction indicator to reset it.

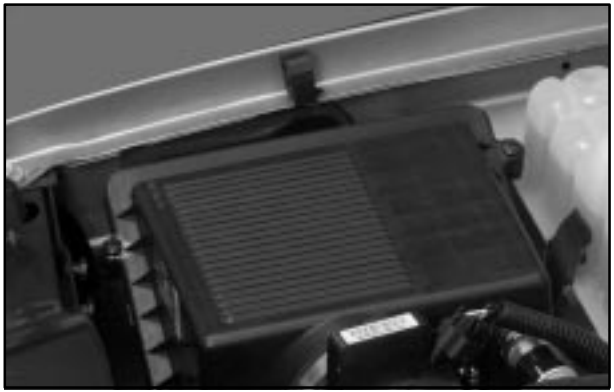

Your engine air cleaner/filter is located in the air filter housing near the front corner of the engine compartment on the passenger’s side of the vehicle. See “Engine Compartment Overview” in the Index for more information on location.

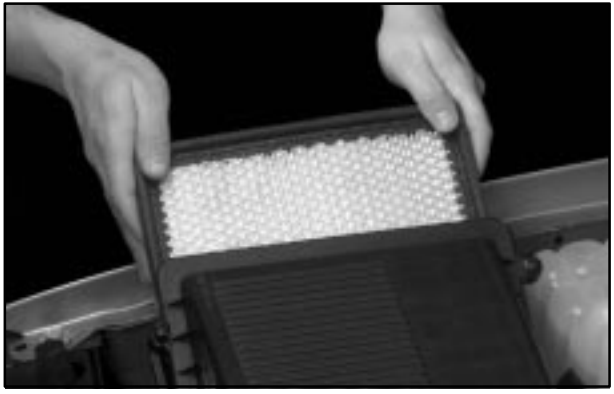

1. To remove the engine air cleaner/filter, loosen the screws on the cover.
2. Lift the cover upward and remove the engine air cleaner/filter out of the air cleaner housing. Care should be taken to dislodge as little dirt as possible.
3. Clean the filter sealing surface and the housing.
4. Install the new engine air cleaner/filter.
5. Install the cover and tighten the screws.

Refer to the Maintenance Schedule to determine when to replace the engine air cleaner/filter. See “Owner Checks and Services” in the Index.

⚠ CAUTION:

Operating the engine with the air cleaner/filter off can cause you or others to be burned. The air cleaner not only cleans the air, it stops flame if the engine backfires. If it isn’t there, and the engine backfires, you could be burned. Don’t drive with it off, and be careful working on the engine with the air cleaner/filter off.

NOTICE:

If the air cleaner/filter is off, a backfire can cause a damaging engine fire. And, dirt can easily get into your engine, which will damage it. Always have the air cleaner/filter in place when you’re driving.

Passenger Compartment Air Filter

The filter is located under the instrument panel below the glove compartment.

To replace the passenger compartment air filter do the following:

1. Remove the bolts on the access panel and set the panel aside. Because this operation can be a little difficult, you may choose to have it done at your dealer's service department.

2. Reach under the instrument panel towards the front of the vehicle and pull downward on the filter retaining bracket.
3. Remove the air filter by pulling downward on the element. Remove the second portion of the air filter by sliding it towards the rear of the vehicle and then pulling downward.
4. Install the new filter by reversing the steps listed previously. Be sure to follow any instructions that may be included in the replacement filter package.

Refer to the Maintenance Schedule to determine when to replace the passenger compartment air filter. See "Scheduled Maintenance" in the Index.

Automatic Transmission Fluid

When to Check and Change

A good time to check your automatic transmission fluid level is when the engine oil is changed.

Change both the fluid and filter every 50,000 miles (83 000 km) if the vehicle is mainly driven under one or more of these conditions:

- In heavy city traffic where the outside temperature regularly reaches 90°F (32°C) or higher.
- In hilly or mountainous terrain.
- When doing frequent trailer towing.
- Uses such as found in taxi, police or delivery service.

If you do not use your vehicle under any of these conditions, change the fluid and filter every 100,000 miles (166 000 km).

See “Scheduled Maintenance Services” in the Index.

How to Check

Because this operation can be a little difficult, you may choose to have this done at the dealership service department.

If you do it yourself, be sure to follow all the instructions here, or you could get a false reading on the dipstick.

NOTICE:

Too much or too little fluid can damage your transmission. Too much can mean that some of the fluid could come out and fall on hot engine parts or exhaust system parts, starting a fire. Too little fluid could cause the transmission to overheat. Be sure to get an accurate reading if you check your transmission fluid.

Wait at least 30 minutes before checking the transmission fluid level if you have been driving:

- When outside temperatures are above 90°F (32°C).
- At high speed for quite a while.
- In heavy traffic -- especially in hot weather.
- While pulling a trailer.

To get the right reading, the fluid should be at normal operating temperature, which is 180°F to 200°F (82°C to 93°C).

Get the vehicle warmed up by driving about 15 miles (24 km) when outside temperatures are above 50°F (10°C). If it's colder than 50°F (10°C), drive the vehicle in THIRD (3) until the engine temperature gage moves and then remains steady for 10 minutes.

A cold fluid check can be made after the vehicle has been sitting for eight hours or more with the engine off, but this is used only as a reference. Let the engine run at idle for five minutes if outside temperatures are 50°F (10°C) or more. If it's colder than 50°F (10°C), you may have to idle the engine longer. Should the fluid level be low during this cold check, you *must* check the fluid hot before adding fluid. Checking the fluid hot will give you a more accurate reading of the fluid level.

Checking the Fluid Level

Prepare your vehicle as follows:

- Park your vehicle on a level place. Keep the engine running.
- With the parking brake applied, place the shift lever in PARK (P).
- With your foot on the brake pedal, move the shift lever through each gear range, pausing for about three seconds in each range. Then, position the shift lever in PARK (P).
- Let the engine run at idle for three minutes or more.

Then, without shutting off the engine, follow these steps:

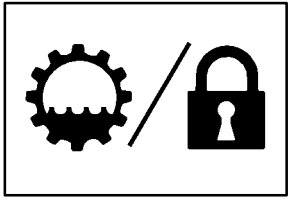

Your vehicle will have either the transmission dipstick handle labeled "TRANS/LOCK" or will be labeled with the graphic shown.

1. Flip the handle up and then pull out the dipstick and wipe it with a clean rag or paper towel.
2. Push it back in all the way, wait three seconds and then pull it back out again.

3. Check both sides of the dipstick, and read the lower level. The fluid level must be in the COLD area, below the cross-hatched area, for a cold check or in the HOT area or cross-hatched area for a hot check.
4. If the fluid level is in the acceptable range, push the dipstick back in all the way; then flip the handle down to lock the dipstick in place.

How to Add Fluid

Refer to the Maintenance Schedule to determine what kind of transmission fluid to use. See “Recommended Fluids and Lubricants” in the Index.

Add fluid only after checking the transmission fluid while it is hot. (A cold check is used only as a reference.) If the fluid level is low, add only enough of the proper fluid to bring the level up to the HOT area for a hot check. It doesn’t take much fluid, generally less than one pint (0.5 L). *Don’t overfill.*

NOTICE:

We recommend you use only fluid labeled DEXRON®-III, because fluid with that label is made especially for your automatic transmission. Damage caused by fluid other than DEXRON®-III is not covered by your new vehicle warranty.

- After adding fluid, recheck the fluid level as described under “How to Check.”
- When the correct fluid level is obtained, push the dipstick back in all the way; then flip the handle down to lock the dipstick in place.

Rear Axle

When to Check Lubricant

Refer to the Maintenance Schedule to determine how often to check the lubricant. See “Scheduled Maintenance Services” in the Index.

How to Check Lubricant

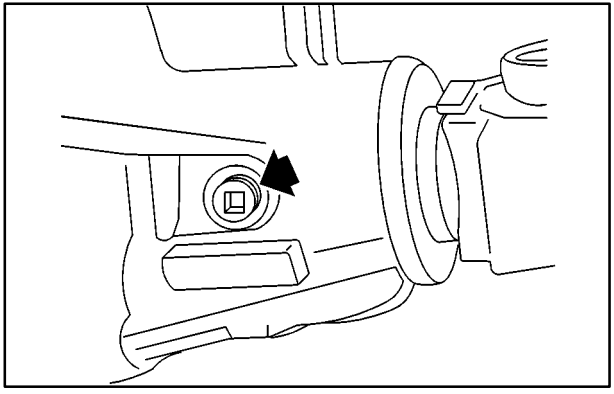

To get an accurate reading, the vehicle should be on a level surface.

The proper level is from 5/8 inch to 1 5/8 inch (15 mm to 40 mm) below the bottom of the filler plug hole. Add only enough fluid to reach the proper level.

What to Use

Refer to the Maintenance Schedule to determine what kind of lubricant to use. See “Recommended Fluids and Lubricants” in the Index.

All-Wheel Drive

Lubricant checks in this section also apply to these vehicles. However, there are two additional systems that need lubrication.

Transfer Case

When to Check Lubricant

Refer to the Maintenance Schedule to determine how often to check the lubricant. See “Periodic Maintenance Inspections” in the Index.

How to Check Lubricant

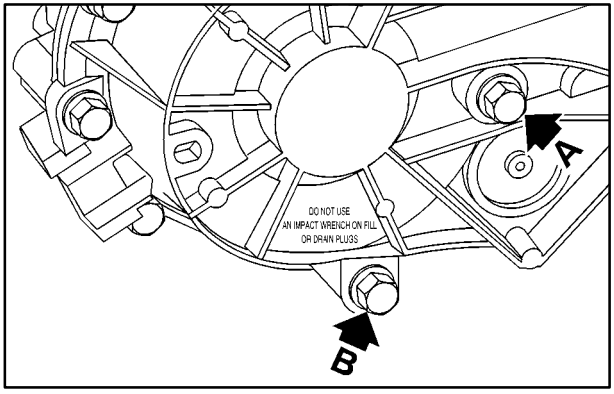

Automatic Transfer Case
(A) Filler Plug (B) Drain Plug

To get an accurate reading, the vehicle should be on a level surface.

If the level is below the bottom of the filler plug hole, you’ll need to add some lubricant. Add enough lubricant to raise the level to the bottom of the filler plug hole. Use care not to overtighten the plug.

What to Use

Refer to the Maintenance Schedule to determine what kind of lubricant to use. See “Recommended Fluids and Lubricants” in the Index.

Front Axle

When to Check and Change Lubricant

Refer to the Maintenance Schedule to determine how often to check the lubricant and when to change it. See “Scheduled Maintenance Services” in the Index.

How to Check Lubricant

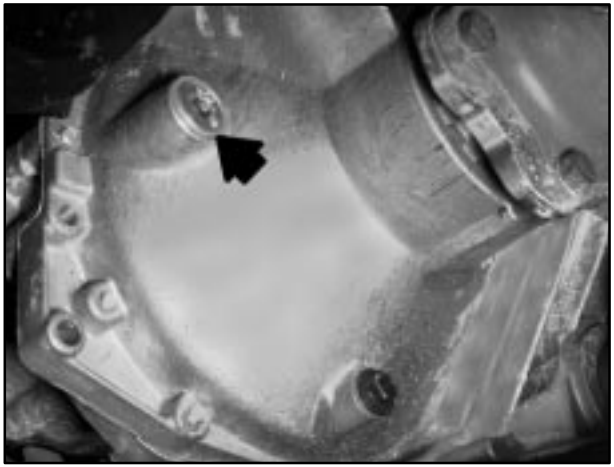

To get an accurate reading, the vehicle should be on a level surface.

If the level is below the bottom of the filler plug hole, you may need to add some lubricant.

When the differential is cold, add enough lubricant to raise the level to 1/2 inch (12 mm) below the filler plug hole.

When the differential is at operating temperature (warm), add enough lubricant to raise the level to the bottom of the filler plug hole.

What to Use

Refer to the Maintenance Schedule to determine what kind of lubricant to use. See “Recommended Fluids and Lubricants” in the Index.

Engine Coolant

The cooling system in your vehicle is filled with DEX-COOL® engine coolant. This coolant is designed to remain in your vehicle for 5 years or 150,000 miles (240 000 km), whichever occurs first, if you add only DEX-COOL® extended life coolant.

The following explains your cooling system and how to add coolant when it is low. If you have a problem with engine overheating, see “Engine Overheating” in the Index.

A 50/50 mixture of clean, drinkable water and DEX-COOL® coolant will:

- Give freezing protection down to -34°F (-37°C).
- Give boiling protection up to 265°F (129°C).
- Protect against rust and corrosion.
- Help keep the proper engine temperature.
- Let the warning lights and gages work as they should.

NOTICE:

When adding coolant, it is important that you use only DEX-COOL® (silicate-free) coolant.

If coolant other than DEX-COOL is added to the system, premature engine, heater core or radiator corrosion may result. In addition, the engine coolant will require change sooner -- at 30,000 miles (50 000 km) or 24 months, whichever occurs first. Damage caused by the use of coolant other than DEX-COOL® is not covered by your new vehicle warranty.

What to Use

Use a mixture of one-half *clean, drinkable water* and one-half DEX-COOL® coolant which won't damage aluminum parts. If you use this coolant mixture, you don't need to add anything else.

⚠ CAUTION:

Adding only plain water to your cooling system can be dangerous. Plain water, or some other liquid such as alcohol, can boil before the proper coolant mixture will. Your vehicle's coolant warning system is set for the proper coolant mixture. With plain water or the wrong mixture, your engine could get too hot but you wouldn't get the overheat warning. Your engine could catch fire and you or others could be burned. Use a 50/50 mixture of clean, drinkable water and DEX-COOL® coolant.

NOTICE:

If you use an improper coolant mixture, your engine could overheat and be badly damaged. The repair cost wouldn't be covered by your warranty. Too much water in the mixture can freeze and crack the engine, radiator, heater core and other parts.

If you have to add coolant more than four times a year, have your dealer check your cooling system.

NOTICE:

If you use the proper coolant, you don't have to add extra inhibitors or additives which claim to improve the system. These can be harmful.

Checking Coolant

The coolant surge tank is located in the engine compartment on the passenger's side of the vehicle.

See "Engine Compartment Overview" in the Index for more information on location.

⚠ CAUTION:

Turning the surge tank pressure cap when the engine and radiator are hot can allow steam and scalding liquids to blow out and burn you badly. Never turn the surge tank pressure cap -- even a little -- when the engine and radiator are hot.

The vehicle must be on a level surface. When your engine is cold, the coolant level should be at the FILL COLD mark.

LOW
COOLANT

If the LOW COOLANT message comes on and stays on, it means you're low on engine coolant.

See "Low Coolant" in the Index.

Adding Coolant

If you need more coolant, add the proper DEX-COOL® coolant mixture *at the surge tank*, but only when the engine is cool.

⚠ CAUTION:

You can be burned if you spill coolant on hot engine parts. Coolant contains ethylene glycol, and it will burn if the engine parts are hot enough. Don't spill coolant on a hot engine.

When replacing the pressure cap, make sure it is hand-tight.

Coolant Surge Tank Pressure Cap

The coolant surge tank pressure cap must be fully installed on the coolant surge tank. See "Engine Compartment Overview" in the Index for more information on location.

NOTICE:

Your coolant surge tank pressure cap is a 15 psi (105 kPa) pressure-type cap and must be tightly installed to prevent coolant loss and possible engine damage from overheating.

Power Steering Fluid

When to Check Power Steering Fluid

It is not necessary to regularly check power steering fluid unless you suspect there is a leak in the system or you hear an unusual noise. A fluid loss in this system could indicate a problem. Have the system inspected and repaired. See “Engine Compartment Overview” in the Index for reservoir location.

How to Check Power Steering Fluid

Turn the key off, let the engine compartment cool down, wipe the cap and the top of the reservoir clean, then unscrew the cap and wipe the dipstick with a clean rag. Replace the cap and completely tighten it. Then remove the cap again and look at the fluid level on the dipstick.

The level should be at the FULL COLD mark.
If necessary, add only enough fluid to bring the level up to the mark.

What to Use

To determine what kind of fluid to use, see “Recommended Fluids and Lubricants” in the Index. Always use the proper fluid. Failure to use the proper fluid can cause leaks and damage hoses and seals.

Windshield Washer Fluid

What to Use

When you need windshield washer fluid, be sure to read the manufacturer's instructions before use. If you will be operating your vehicle in an area where the temperature may fall below freezing, use a fluid that has sufficient protection against freezing. See "Engine Compartment Overview" in the Index for reservoir location.

Adding Washer Fluid

Your vehicle has a low washer fluid message that comes on when the washer fluid is low. The message is displayed for 15 seconds at the start of each ignition cycle. When the LOW WASHER FLUID message is displayed, you will need to add washer fluid to the windshield washer fluid reservoir.

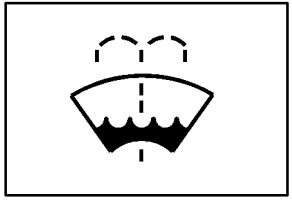

The windshield washer fluid reservoir is located in the engine compartment toward the front of the vehicle on the driver's side.

Open the cap with the washer symbol on it. Add washer fluid until the tank is full.

NOTICE:

- **When using concentrated washer fluid, follow the manufacturer's instructions for adding water.**
- **Don't mix water with ready-to-use washer fluid. Water can cause the solution to freeze and damage your washer fluid tank and other parts of the washer system. Also, water doesn't clean as well as washer fluid.**
- **Fill your washer fluid tank only three-quarters full when it's very cold. This allows for expansion if freezing occurs, which could damage the tank if it is completely full.**
- **Don't use engine coolant (antifreeze) in your windshield washer. It can damage your washer system and paint.**

Brakes

Brake Fluid

Your brake master cylinder reservoir is filled with DOT-3 brake fluid.

See “Engine Compartment Overview” in the Index for the location of the reservoir.

There are only two reasons why the brake fluid level in the reservoir might go down. The first is that the brake fluid goes down to an acceptable level during normal brake lining wear. When new linings are put in, the fluid level goes back up. The other reason is that fluid is leaking out of the brake system. If it is, you should have your brake system fixed, since a leak means that sooner or later your brakes won’t work well, or won’t work at all.

So, it isn’t a good idea to “top off” your brake fluid. Adding brake fluid won’t correct a leak. If you add fluid when your linings are worn, then you’ll have too much fluid when you get new brake linings. You should add (or remove) brake fluid, as necessary, only when work is done on the brake hydraulic system.

⚠ CAUTION:

If you have too much brake fluid, it can spill on the engine. The fluid will burn if the engine is hot enough. You or others could be burned, and your vehicle could be damaged. Add brake fluid only when work is done on the brake hydraulic system. See "Checking Brake Fluid" in this section.

Refer to the Maintenance Schedule to determine when to check your brake fluid. See "Periodic Maintenance Inspections" in the Index.

Checking Brake Fluid

You can check the brake fluid without taking off the cap.

Just look at the brake fluid reservoir. The fluid level should be above MIN. If it isn't, have your brake system checked to see if there is a leak.

After work is done on the brake hydraulic system, make sure the level is above the MIN but not over the MAX mark.

What to Add

When you do need brake fluid, use only DOT-3 brake fluid. Refer to “Recommended Fluids and Lubricants” in the Index. Use new brake fluid from a sealed container only.

Always clean the brake fluid reservoir cap and the area around the cap before removing it. This will help keep dirt from entering the reservoir.

⚠ CAUTION:

With the wrong kind of fluid in your brake system, your brakes may not work well, or they may not even work at all. This could cause a crash. Always use the proper brake fluid.

NOTICE:

- **Using the wrong fluid can badly damage brake system parts. For example, just a few drops of mineral-based oil, such as engine oil, in your brake system can damage brake system parts so badly that they’ll have to be replaced. Don’t let someone put in the wrong kind of fluid.**
- **If you spill brake fluid on your vehicle’s painted surfaces, the paint finish can be damaged. Be careful not to spill brake fluid on your vehicle. If you do, wash it off immediately. See “Appearance Care” in the Index.**

Brake Wear

Your vehicle has four-wheel disc brakes.

Disc brake pads have built-in wear indicators that make a high-pitched warning sound when the brake pads are worn and new pads are needed. The sound may come and go or be heard all the time your vehicle is moving (except when you are pushing on the brake pedal firmly).

⚠ CAUTION:

The brake wear warning sound means that soon your brakes won't work well. That could lead to an accident. When you hear the brake wear warning sound, have your vehicle serviced.

NOTICE:

Continuing to drive with worn-out brake pads could result in costly brake repair.

Some driving conditions or climates may cause a brake squeal when the brakes are first applied or lightly applied. This does not mean something is wrong with your brakes.

Properly torqued wheel nuts are necessary to help prevent brake pulsation. When tires are rotated, inspect brake pads for wear and evenly tighten wheel nuts in the proper sequence to GM torque specifications.

Brake linings should always be replaced as complete axle sets.

See "Brake System Inspection" in Section 7 of this manual under Part C "Periodic Maintenance Inspections."

Brake Pedal Travel

See your dealer if the brake pedal does not return to normal height, or if there is a rapid increase in pedal travel. This could be a sign of brake trouble.

Brake Adjustment

Every time you make a brake stop, your disc brakes adjust for wear.

Replacing Brake System Parts

The braking system on a vehicle is complex. Its many parts have to be of top quality and work well together if the vehicle is to have really good braking. Your vehicle was designed and tested with top-quality GM brake parts. When you replace parts of your braking system -- for example, when your brake linings wear down and you need new ones put in -- be sure you get new approved GM replacement parts. If you don't, your brakes may no longer work properly. For example, if someone puts in brake linings that are wrong for your vehicle, the balance between your front and rear brakes can change -- for the worse. The braking performance you've come to expect can change in many other ways if someone puts in the wrong replacement brake parts.

Battery

Your new vehicle comes with a maintenance free ACDelco® battery. When it's time for a new battery, get one that has the replacement number shown on the original battery's label. We recommend an ACDelco battery. See "Engine Compartment Overview" in the Index for battery location.

WARNING: Battery posts, terminals and related accessories contain lead and lead compounds, chemicals known to the State of California to cause cancer and reproductive harm. Wash hands after handling.

Vehicle Storage

If you're not going to drive your vehicle for 25 days or more, remove the black, negative (-) cable from the battery. This will help keep your battery from running down.

⚠ CAUTION:

Batteries have acid that can burn you and gas that can explode. You can be badly hurt if you aren't careful. See "Jump Starting" in the Index for tips on working around a battery without getting hurt.

Contact your dealer to learn how to prepare your vehicle for longer storage periods.

Also, for your audio system, see "Theft-Deterrent Feature" in the Index.

To reprogram your sunroof (if equipped), see "Sunroof" also in the Index.

Bulb Replacement

See “Replacement Bulbs” in the Index for the proper type of bulbs to use.

For any bulb changing procedure not listed in this section, contact your dealer.

Halogen Bulbs

⚠ CAUTION:

Halogen bulbs have pressurized gas inside and can burst if you drop or scratch the bulb. You or others could be injured. Be sure to read and follow the instructions on the bulb package.

Headlamps

1. Remove the two pins on the top of the headlamp assembly. To remove the pins, turn the outer pin outward and pull it straight up. To remove the inner pin, turn it inward and pull it straight up.

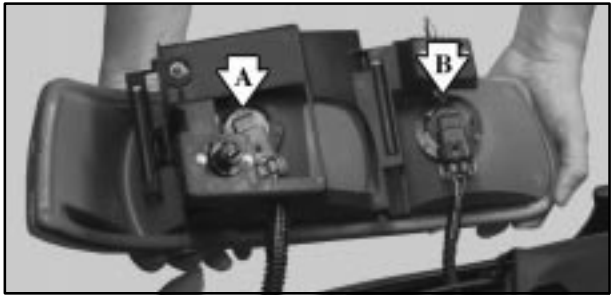

A. Low-Beam Headlamp

B. High-Beam Headlamp

1. Pull the headlamp assembly out.
2. Unplug the electrical connector.
3. Turn the bulb counterclockwise and remove it from the headlamp assembly.
4. Put the new bulb into the headlamp assembly and turn it clockwise until it is tight. Use care not to touch the bulb with your fingers or hands.
5. Plug in the electrical connector.
6. Put the headlamp assembly back into the vehicle.
7. Install and turn the two pins into the locking feature.

Front Turn Signal, Sidemarker and Daytime Running Lamps

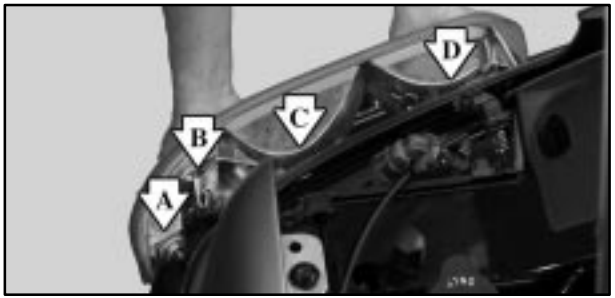

A. Sidemarker Lamp

B. Retainer Clip

C. Front Turn Signal Lamp

D. Daytime Running Lamp

1. Remove the headlamp assembly as mentioned previously.

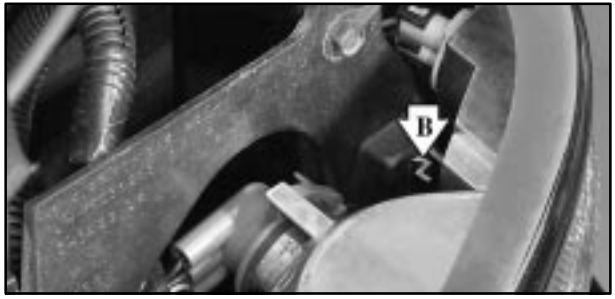

2. Press the retainer clip (B), located behind the turn signal housing, towards the outside of the vehicle.
3. Pull the turn signal housing out from the vehicle.
4. Press the locking release lever, turn the bulb socket counterclockwise and remove it from the turn signal housing.
5. Remove the bulb from the bulb socket.
6. Put the new bulb into the bulb socket.
7. Put the bulb socket into the turn signal housing and turn it clockwise until it locks.
8. Put the turn signal housing back onto the vehicle placing the hook and posts on the inner side into the alignment holes first and then the outer side into the retainer bracket until you hear a click.
9. Put the headlamp assembly back into the vehicle.

Center High Mounted Stoplamp (CHMSL)

It is recommended that this component be replaced as a unit by your dealer.

Taillamps

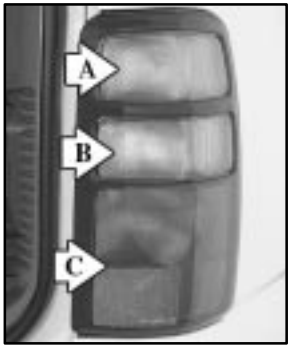

A. Turn Signal Lamp

B. Back-Up Lamp

C. Stoplamp

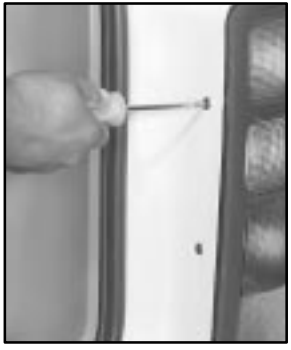

1. Remove the two screws from the rear lamp assembly.

2. Remove the rear lamp assembly.

3. Press the release tab and turn the bulb socket counterclockwise to remove it from the taillamp housing.

4. Pull the bulb straight out from the socket.

5. Press a new bulb into the socket, insert it into the taillamp housing and turn the socket clockwise into the taillamp housing until it clicks.

6. Reinstall the rear lamp assembly and tighten the screws.

Windshield Wiper Blade Replacement

Windshield wiper blades should be inspected at least twice a year for wear and cracking. See “Wiper Blade Check” in the Index for more information.

Replacement blades come in different types and are removed in different ways. For proper type and length, see “Normal Maintenance Replacement Parts” in the Index. Here’s how to remove the Shephard’s Hook type.

To replace the windshield wiper blade assembly do the following:

1. Lift the wiper arm and turn the blade until it is facing away from the windshield.

2. Push the release lever and slide the wiper assembly toward the driver’s side of the vehicle.
3. Install a new blade by reversing Steps 1 and 2.

Tires

Your new vehicle comes with high-quality tires made by a leading tire manufacturer. If you ever have questions about your tire warranty and where to obtain service, see your GMC Warranty booklet for details.

⚠ CAUTION:

Poorly maintained and improperly used tires are dangerous.

- **Overloading your tires can cause overheating as a result of too much friction. You could have an air-out and a serious accident. See "Loading Your Vehicle" in the Index.**

CAUTION: (Continued)

CAUTION: (Continued)

- **Underinflated tires pose the same danger as overloaded tires. The resulting accident could cause serious injury. Check all tires frequently to maintain the recommended pressure. Tire pressure should be checked when your tires are cold.**
- **Overinflated tires are more likely to be cut, punctured or broken by a sudden impact -- such as when you hit a pothole. Keep tires at the recommended pressure.**
- **Worn, old tires can cause accidents. If your tread is badly worn, or if your tires have been damaged, replace them.**

Inflation -- Tire Pressure

The Certification/Tire label, which is located on the rear edge of the driver's door, shows the correct inflation pressures for your tires when they're cold. "Cold" means your vehicle has been sitting for at least three hours or driven no more than 1 mile (1.6 km).

NOTICE:

Don't let anyone tell you that underinflation or overinflation is all right. It's not. If your tires don't have enough air (underinflation), you can get the following:

- **Too much flexing**
- **Too much heat**
- **Tire overloading**
- **Bad wear**
- **Bad handling**
- **Bad fuel economy**

NOTICE: (Continued)

NOTICE: (Continued)

If your tires have too much air (overinflation), you can get the following:

- **Unusual wear**
- **Bad handling**
- **Rough ride**
- **Needless damage from road hazards**

When to Check

Check your tires once a month or more. Also, check the tire pressure of the spare tire.

How to Check

Use a good quality pocket-type gage to check tire pressure. You can't tell if your tires are properly inflated simply by looking at them. Radial tires may look properly inflated even when they're underinflated.

Be sure to put the valve caps back on the valve stems. They help prevent leaks by keeping out dirt and moisture.

Tire Inspection and Rotation

Tires should be rotated every 6,000 to 8,000 miles (10 000 to 13 000 km). Any time you notice unusual wear, rotate your tires as soon as possible and check wheel alignment. Also check for damaged tires or wheels. See “When It’s Time for New Tires” and “Wheel Replacement” later in this section for more information. Make sure the spare tire is stored securely. Push, pull, and then try to rotate or turn the tire. If it moves, use the wheel wrench to tighten the cable. See “Storing a Flat or Spare Tire and Tools” in the Index.

The purpose of regular rotation is to achieve more uniform wear for all tires on the vehicle. The first rotation is the most important. See “Scheduled Maintenance Services” in the Index for scheduled rotation intervals.

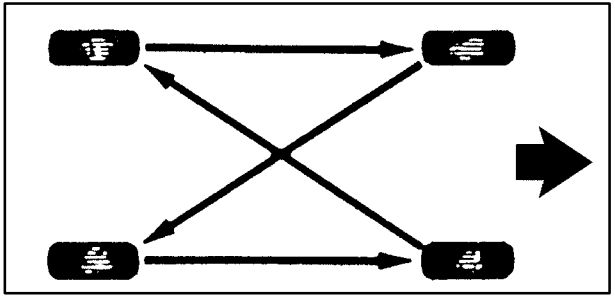

When rotating your tires, always use the correct rotation pattern shown here. Don’t include the spare tire in your tire rotation.

After the tires have been rotated, adjust the front and rear inflation pressures as shown on the Certification/Tire label. Make certain that all wheel nuts are properly tightened. See “Wheel Nut Torque” in the Index.

⚠ CAUTION:

Rust or dirt on a wheel, or on the parts to which it is fastened, can make wheel nuts become loose after a time. The wheel could come off and cause an accident. When you change a wheel, remove any rust or dirt from places where the wheel attaches to the vehicle. In an emergency, you can use a cloth or a paper towel to do this; but be sure to use a scraper or wire brush later, if you need to, to get all the rust or dirt off. See “Changing a Flat Tire” in the Index.

When It's Time for New Tires

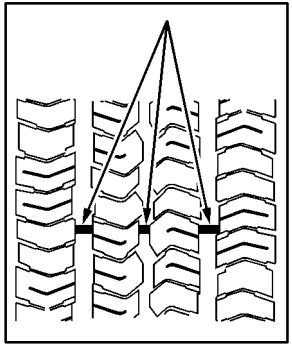

One way to tell when it's time for new tires is to check the treadwear indicators, which will appear when your tires have only 1/16 inch (1.6 mm) or less of tread remaining.

You need a new tire if any of the following statements are true:

- You can see the indicators at three or more places around the tire.
- You can see cord or fabric showing through the tire's rubber.
- The tread or sidewall is cracked, cut or snagged deep enough to show cord or fabric.
- The tire has a bump, bulge or split.
- The tire has a puncture, cut or other damage that can't be repaired well because of the size or location of the damage.

Buying New Tires

To find out what kind and size of tires you need, look at the Certification/Tire label.

The tires installed on your vehicle when it was new had a Tire Performance Criteria Specification (TPC Spec) number on each tire's sidewall. When you get new tires, get ones with that same TPC Spec number. That way your vehicle will continue to have tires that are designed to give proper endurance, handling, speed rating, traction, ride and other things during normal service on your vehicle. If your tires have an all-season tread design, the TPC number will be followed by an "MS" (for mud and snow).

If you ever replace your tires with those not having a TPC Spec number, make sure they are the same size, load range, speed rating and construction type (bias, bias-belted or radial) as your original tires.

⚠ CAUTION:

Mixing tires could cause you to lose control while driving. If you mix tires of different sizes or types (radial and bias-belted tires), the vehicle may not handle properly, and you could have a crash. Using tires of different sizes may also cause damage to your vehicle. Be sure to use the same size and type tires on all wheels.

If your vehicle has 17 inch road tires (those originally installed on your vehicle) it is all right to drive with the 16 inch spare tire that came with your vehicle. When new, your vehicle included a spare tire and wheel assembly with the same overall diameter as your vehicle's road tires and wheels. Because this spare tire was developed for use on your vehicle, it will not affect vehicle handling or cause damage to your vehicle.

⚠ CAUTION:

If you use bias-ply tires on your vehicle, the wheel rim flanges could develop cracks after many miles of driving. A tire and/or wheel could fail suddenly, causing a crash. Use only radial-ply tires with the wheels on your vehicle.

Uniform Tire Quality Grading

Quality grades can be found where applicable on the tire sidewall between tread shoulder and maximum section width. For example:

Treadwear 200 Traction AA Temperature A

The following information relates to the system developed by the United States National Highway Traffic Safety Administration, which grades tires by treadwear, traction and temperature performance. (This applies only to vehicles sold in the United States.) The grades are molded on the sidewalls of most passenger car tires. The Uniform Tire Quality Grading system does not apply to deep tread, winter-type snow tires, space-saver or temporary use spare tires, tires with nominal rim diameters of 10 to 12 inches (25 to 30 cm), or to some limited-production tires.

While the tires available on General Motors passenger cars and light trucks may vary with respect to these grades, they must also conform to federal safety requirements and additional General Motors Tire Performance Criteria (TPC) standards.

Treadwear

The treadwear grade is a comparative rating based on the wear rate of the tire when tested under controlled conditions on a specified government test course. For example, a tire graded 150 would wear one and a half (1 1/2) times as well on the government course as a tire graded 100. The relative performance of tires depends upon the actual conditions of their use, however, and may depart significantly from the norm due to variations in driving habits, service practices and differences in road characteristics and climate.

Traction -- AA, A, B, C

The traction grades, from highest to lowest, are AA, A, B, and C. Those grades represent the tire's ability to stop on wet pavement as measured under controlled conditions on specified government test surfaces of asphalt and concrete. A tire marked C may have poor traction performance. Warning: The traction grade assigned to this tire is based on straight-ahead braking traction tests, and does not include acceleration, cornering, hydroplaning, or peak traction characteristics.

Temperature -- A, B, C

The temperature grades are A (the highest), B, and C, representing the tire's resistance to the generation of heat and its ability to dissipate heat when tested under controlled conditions on a specified indoor laboratory test wheel. Sustained high temperature can cause the material of the tire to degenerate and reduce tire life, and excessive temperature can lead to sudden tire failure. The grade C corresponds to a level of performance which all passenger car tires must meet under the Federal Motor Vehicle Safety Standard No. 109. Grades B and A represent higher levels of performance on the laboratory test wheel than the minimum required by law.

Warning: The temperature grade for this tire is established for a tire that is properly inflated and not overloaded. Excessive speed, underinflation, or excessive loading, either separately or in combination, can cause heat buildup and possible tire failure.

Wheel Alignment and Tire Balance

The wheels on your vehicle were aligned and balanced carefully at the factory to give you the longest tire life and best overall performance.

Scheduled wheel alignment and wheel balancing are not needed. However, if you notice unusual tire wear or your vehicle pulling one way or the other, the alignment may need to be reset. If you notice your vehicle vibrating when driving on a smooth road, your wheels may need to be rebalanced.

Wheel Replacement

Replace any wheel that is bent, cracked, or badly rusted or corroded. If wheel nuts keep coming loose, the wheel, wheel bolts and wheel nuts should be replaced. If the wheel leaks air, replace it (except some aluminum wheels, which can sometimes be repaired). See your dealer if any of these conditions exist.

Your dealer will know the kind of wheel you need.

Each new wheel should have the same load-carrying capacity, diameter, width, offset and be mounted the same way as the one it replaces.

If you need to replace any of your wheels, wheel bolts or wheel nuts, replace them only with new GM original equipment parts. This way, you will be sure to have the right wheel, wheel bolts and wheel nuts for your vehicle.

⚠ CAUTION:

Using the wrong replacement wheels, wheel bolts or wheel nuts on your vehicle can be dangerous. It could affect the braking and handling of your vehicle, make your tires lose air and make you lose control. You could have a collision in which you or others could be injured. Always use the correct wheel, wheel bolts and wheel nuts for replacement.

NOTICE:

The wrong wheel can also cause problems with bearing life, brake cooling, speedometer or odometer calibration, headlamp aim, bumper height, vehicle ground clearance and tire clearance to the body and chassis.

See “Changing a Flat Tire” in the Index for more information.

Used Replacement Wheels

⚠ CAUTION:

Putting a used wheel on your vehicle is dangerous. You can't know how it's been used or how far it's been driven. It could fail suddenly and cause a crash. If you have to replace a wheel, use a new GM original equipment wheel.

Tire Chains

⚠ CAUTION:

Don't use tire chains. There's not enough clearance. Tire chains used on a vehicle without the proper amount of clearance can cause damage to the brakes, suspension or other vehicle parts. The area damaged by the tire chains could cause you to lose control of your vehicle and you or others may be injured in a crash.

Use another type of traction device only if its manufacturer recommends it for use on your vehicle and tire size combination and road conditions. Follow that manufacturer's instructions. To help avoid damage to your vehicle, drive slowly, readjust or remove the device if it's contacting your vehicle, and don't spin your wheels.

If you do find traction devices that will fit, install them on the rear tires.

Appearance Care

Remember, cleaning products can be hazardous. Some are toxic. Others can burst into flame if you strike a match or get them on a hot part of the vehicle. Some are dangerous if you breathe their fumes in a closed space. When you use anything from a container to clean your vehicle, be sure to follow the manufacturer's warnings and instructions. And always open your doors or windows when you're cleaning the inside.

Never use these to clean your vehicle:

- Gasoline
- Benzene
- Naphtha
- Carbon Tetrachloride
- Acetone
- Paint Thinner
- Turpentine
- Lacquer Thinner
- Nail Polish Remover

They can all be hazardous -- some more than others -- and they can all damage your vehicle, too.

Don't use any of these unless this manual says you can. In many uses, these will damage your vehicle:

- Alcohol
- Laundry Soap
- Bleach
- Reducing Agents

Cleaning the Inside of Your Vehicle

Use a vacuum cleaner often to get rid of dust and loose dirt. Wipe vinyl, leather, plastic and painted surfaces with a clean, damp cloth.

Cleaning of Fabric/Carpet

Your dealer has cleaners for the cleaning of fabric and carpet. They will clean normal spots and stains very well. You can get GM-approved cleaning products from your dealer. See “Appearance Care and Materials” in the Index.

Here are some cleaning tips:

- Always read the instructions on the cleaner label.
- Clean up stains as soon as you can -- before they set.
- Carefully scrape off any excess stain.
- Use a clean cloth or sponge, and change to a clean area often. A soft brush may be used if stains are stubborn.
- If a ring forms on fabric after spot cleaning, clean the entire area immediately or it will set.

Cleaning Vinyl

Use warm water and a clean cloth.

- Rub with a clean, damp cloth to remove dirt. You may have to do it more than once.
- Things like tar, asphalt and shoe polish will stain if you don’t get them off quickly. Use a clean cloth and a vinyl/leather cleaner. See your dealer for this product.

Cleaning Leather

Use a soft cloth with lukewarm water and a mild soap or saddle soap and wipe dry with a soft cloth. Then, let the leather dry naturally. Do not use heat to dry.

- For stubborn stains, use a leather cleaner. See your dealer for this product.
- *Never* use oils, varnishes, solvent-based or abrasive cleaners, furniture polish or shoe polish on leather.
- Soiled or stained leather should be cleaned immediately. If dirt is allowed to work into the finish, it can harm the leather.

Cleaning the Top of the Instrument Panel

Use only mild soap and water to clean the top surfaces of the instrument panel. Sprays containing silicones or waxes may cause annoying reflections in the windshield and even make it difficult to see through the windshield under certain conditions.

Cleaning Interior Plastic Components

Use only a mild soap and water solution on a soft cloth or sponge. Commercial cleaners may affect the surface finish.

Cleaning Wood Panels

Use a clean cloth moistened in warm, soapy water (use mild dish washing soap). Dry the wood immediately with a clean cloth.

Cleaning Speaker Covers

Vacuum around a speaker cover gently, so that the speaker won't be damaged. Clean spots with just water and mild soap.

Care of Safety Belts

Keep belts clean and dry.

⚠ CAUTION:

Do not bleach or dye safety belts. If you do, it may severely weaken them. In a crash, they might not be able to provide adequate protection. Clean safety belts only with mild soap and lukewarm water.

Cleaning Glass Surfaces

Glass should be cleaned often. GM Glass Cleaner or a liquid household glass cleaner will remove normal tobacco smoke and dust films on interior glass. See “Appearance Care and Materials” in the Index.

NOTICE:

Don’t use abrasive cleaners on glass, because they may cause scratches. Avoid placing decals on the inside rear window, since they may have to be scraped off later. If abrasive cleaners are used on the inside of the rear window, an electric defogger element may be damaged. Any temporary license should not be attached across the defogger grid.

Cleaning the Outside of the Windshield, Backglass and Wiper Blades

If the windshield is not clear after using the windshield washer, or if the wiper blade chatters when running, wax, sap or other material may be on the blade or windshield.

Clean the outside of the windshield with a full-strength glass cleaning liquid. The windshield is clean if beads do not form when you rinse it with water.

Grime from the windshield will stick to the wiper blades and affect their performance. Clean the blade by wiping vigorously with a cloth soaked in full-strength windshield washer solvent. Then rinse the blade with water.

Check the wiper blades and clean them as necessary; replace blades that look worn.

Weatherstrips

Silicone grease on weatherstrips will make them last longer, seal better, and not stick or squeak. Apply silicone grease with a clean cloth at least every six months. During very cold, damp weather more frequent application may be required. See “Recommended Fluids and Lubricants” in the Index.

Cleaning the Outside of Your Vehicle

The paint finish on your vehicle provides beauty, depth of color, gloss retention and durability.

Washing Your Vehicle

The best way to preserve your vehicle’s finish is to keep it clean by washing it often with lukewarm or cold water.

Don’t wash your vehicle in the direct rays of the sun. Use a car washing soap. Don’t use strong soaps or chemical detergents. Be sure to rinse the vehicle well, removing all soap residue completely. You can get GM-approved cleaning products from your dealer. See “Appearance Care and Materials” in the Index. Don’t use cleaning agents that are petroleum based, or that contain acid or abrasives. All cleaning agents should be flushed promptly and not allowed to dry on the surface, or they could stain. Dry the finish with a soft, clean chamois or an all-cotton towel to avoid surface scratches and water spotting.

High pressure car washes may cause water to enter your vehicle.

Cleaning Exterior Lamps/Lenses

Use only lukewarm or cold water, a soft cloth and a car washing soap to clean exterior lamps and lenses. Follow instructions under “Washing Your Vehicle.”

Finish Care

Occasional waxing or mild polishing of your vehicle by hand may be necessary to remove residue from the paint finish. You can get GM-approved cleaning products from your dealer. See “Appearance Care and Materials” in the Index.

Your vehicle has a “basecoat/clearcoat” paint finish. The clearcoat gives more depth and gloss to the colored basecoat. Always use waxes and polishes that are non-abrasive and made for a basecoat/clearcoat paint finish.

NOTICE:

Machine compounding or aggressive polishing on a basecoat/clearcoat paint finish may dull the finish or leave swirl marks.

Foreign materials such as calcium chloride and other salts, ice melting agents, road oil and tar, tree sap, bird droppings, chemicals from industrial chimneys, etc., can damage your vehicle’s finish if they remain on painted surfaces. Wash the vehicle as soon as possible. If necessary, use non-abrasive cleaners that are marked safe for painted surfaces to remove foreign matter.

Exterior painted surfaces are subject to aging, weather and chemical fallout that can take their toll over a period of years. You can help to keep the paint finish looking new by keeping your vehicle garaged or covered whenever possible.

Protecting Exterior Bright Metal Parts

Bright metal parts should be cleaned regularly to keep their luster. Washing with water is all that is usually needed. However, you may use chrome polish on chrome or stainless steel trim, if necessary.

Use special care with aluminum trim. To avoid damaging protective trim, never use auto or chrome polish, steam or caustic soap to clean aluminum. A coating of wax, rubbed to high polish, is recommended for all bright metal parts.

Cleaning Aluminum Wheels

Keep your wheels clean using a soft clean cloth with mild soap and water. Rinse with clean water. After rinsing thoroughly, dry with a soft clean towel. A wax may then be applied.

The surface of these wheels is similar to the painted surface of your vehicle. Don't use strong soaps, chemicals, abrasive polishes, abrasive cleaners, cleaners with acid or abrasive cleaning brushes on them because you could damage the surface. Do not use chrome polish on aluminum wheels.

Don't take your vehicle through an automatic car wash that has silicon carbide tire cleaning brushes. These brushes can also damage the surface of these wheels.

Cleaning Tires

To clean your tires, use a stiff brush with a tire cleaner.

NOTICE:

When applying a tire dressing always take care to wipe off any overspray or splash from all painted surfaces on the body or wheels of the vehicle. Petroleum-based products may damage the paint finish and tires.

Sheet Metal Damage

If your vehicle is damaged and requires sheet metal repair or replacement, make sure the body repair shop applies anti-corrosion material to the parts repaired or replaced to restore corrosion protection.

Original manufacturer replacement parts will provide the corrosion protection while maintaining the warranty.

Finish Damage

Any stone chips, fractures or deep scratches in the finish should be repaired right away. Bare metal will corrode quickly and may develop into a major repair expense.

Minor chips and scratches can be repaired with touch-up materials available from your dealer or other service outlets. Larger areas of finish damage can be corrected in your dealer's body and paint shop.

Underbody Maintenance

Chemicals used for ice and snow removal and dust control can collect on the underbody. If these are not removed, accelerated corrosion (rust) can occur on the underbody parts such as fuel lines, frame, floor pan and exhaust system even though they have corrosion protection.

At least every spring, flush these materials from the underbody with plain water. Clean any areas where mud and other debris can collect. Dirt packed in closed areas of the frame should be loosened before being flushed. Your dealer or an underbody car washing system can do this for you.

Chemical Paint Spotting

Some weather and atmospheric conditions can create a chemical fallout. Airborne pollutants can fall upon and attack painted surfaces on your vehicle. This damage can take two forms: blotchy, ringlet-shaped discolorations, and small irregular dark spots etched into the paint surface.

Although no defect in the paint job causes this, GMC will repair, at no charge to the owner, the surfaces of new vehicles damaged by this fallout condition within 12 months or 12,000 miles (20 000 km) of purchase, whichever occurs first.

GM Vehicle Care/Appearance Materials

PART NUMBER	SIZE	DESCRIPTION	USAGE
994954	23 in. x 25 in.	Polishing Cloth – Wax Treated	Exterior polishing cloth.
1050172	16 oz. (0.473 L)	Tar and Road Oil Remover	Removes tar, road oil and asphalt.
1050173	16 oz. (0.473 L)	Chrome Cleaner and Polish	Use on chrome or stainless steel.
1050174	16 oz. (0.473 L)	White Sidewall Tire Cleaner	Removes soil and black marks from whitewalls.
1050214	32 oz. (0.946 L)	Vinyl Cleaner	Cleans vinyl tops, upholstery and convertible tops.
1050427	23 oz. (0.680 L)	Glass Cleaner	Removes dirt, grime, smoke and fingerprints.
1052929	16 oz. (0.473 L)	Chrome and Wire Wheel Cleaner	Removes dirt and grime from chrome wheels and wire wheel covers.
12377964	16 oz. (0.473 L)	Finish Enhancer	Removes dust, fingerprints and surface contaminants. Spray on wipe off.
12377965	16 oz. (0.473 L)	Swirl Remover Polish	Removes swirl marks, fine scratches and other light surface contamination.
12377966	16 oz. (0.473 L)	Cleaner Wax	Removes light scratches and oxidation and protects finish.
12378188	15 oz. (0.443 L)	Foaming Tire Shine–Low Gloss	Cleans, shines and protects in one easy step. No wiping necessary.
12378401	16 oz. (0.473 L)	Wash Wax Concentrate	Medium foaming shampoo. Cleans and lightly waxes. Biodegradable and phosphate free.
12378488	8 oz. (0.237 L)	Spot Lifter	Quickly and easily removes spots and stains from carpets, vinyl and cloth upholstery.

See your General Motors parts department for these products.
See "Recommended Fluids and Lubricants" in the Index.

Vehicle Identification Number (VIN)

This is the legal identifier for your vehicle. It appears on a plate in the front corner of the instrument panel, on the driver's side. You can see it if you look through the windshield from outside your vehicle. The VIN also appears on the Vehicle Certification and Service Parts labels and the certificates of title and registration.

Engine Identification

The 8th character in your VIN is the engine code. This code will help you identify your engine, specifications and replacement parts.

Service Parts Identification Label

You'll find this label located in the glove box. It's very helpful if you ever need to order parts. On this label is:

- your VIN,
- the model designation,
- paint information and
- a list of all production options and special equipment.

Be sure that this label is not removed from the vehicle.

Electrical System

Add-On Electrical Equipment

NOTICE:

Don't add anything electrical to your vehicle unless you check with your dealer first. Some electrical equipment can damage your vehicle and the damage wouldn't be covered by your warranty. Some add-on electrical equipment can keep other components from working as they should.

Your vehicle has an air bag system. Before attempting to add anything electrical to your vehicle, see "Servicing Your Air Bag-Equipped Vehicle" in the Index.

Windshield Wipers

The windshield wiper motor is protected by an internal circuit breaker and a fuse. If the motor overheats due to heavy snow, etc., the wiper will stop until the motor cools. If the overload is caused by some electrical problem and not snow, etc., be sure to get it fixed.

Power Windows and Other Power Options

Circuit breakers protect the power windows and other power accessories. When the current load is too heavy, the circuit breaker opens and closes, protecting the circuit until the problem is fixed or goes away.

Fuses and Circuit Breakers

The wiring circuits in your vehicle are protected from short circuits by a combination of fuses, circuit breakers and fusible thermal links. This greatly reduces the chance of fires caused by electrical problems.

Look at the silver-colored band inside the fuse. If the band is broken or melted, replace the fuse. Be sure you replace a bad fuse with a new one of the identical size and rating.

If you ever have a problem on the road and don't have a spare fuse, you can borrow one that has the same amperage. Just pick some feature of your vehicle that you can get along without -- like the radio or cigarette lighter -- and use its fuse, if it is the correct amperage. Replace it as soon as you can.

Instrument Panel Fuse Block

The fuse block access door is on the driver's side edge of the instrument panel. Pull off the cover to access the fuse block.

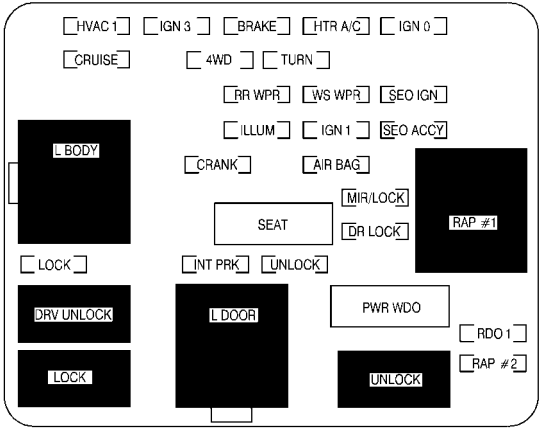

You can remove fuses with a fuse extractor which is mounted to the fuse block access door. To remove fuses if you don't have a fuse extractor, hold the end of the fuse between your thumb and index finger and pull straight out.

You may have spare fuses located behind the fuse block access door. These can be used to replace a bad fuse. However, make sure it is of the correct amperage.

NAME	Usage
HVAC 1	Climate Control System
IGN 3	Ignition, Power Seats
BRAKE	Anti-Lock Brake System
HTR A/C	Climate Control System

NAME	Usage
IGN 0	PRND321 Display, Odometer, VCM/PCM
CRUISE	Cruise Control, Instrument Cluster
4WD	Not Used
TURN	Exterior Lamps, Turn Signals, Hazard Lamps
RR WIPER	Rear Window Wiper
WS WPR	Windshield Wipers
SEO IGN	Special Equipment Option, Ignition
L BODY	Retained Accessory Power Relay
ILLUM	Interior Lamps
IGN 1	Ignition, Instrument Panel
SEO ACCY	Special Equipment Option Accessory
CRANK	Starting System
AIR BAG	Air Bag

NAME	Usage
SEAT	Power Seat Circuit Breaker
MIR/LOCK	Power Mirrors, Power Door Locks
DR LOCK	Power Door Locks
RAP #1	Retained Accessory Power Relay
LOCK	Power Door Locks
INT PRK	Interior Lamps
UNLOCK	Power Door Locks
DRV UNLOCK	Power Door Lock Relay
L DOOR	Power Door Lock Relay
PWR WDO	Power Window Circuit Breaker
RDO 1	Audio System
LOCK	Power Door Lock Relay
UNLOCK	Power Door Lock Relay
RAP #2	Rear Power Windows, Sunroof, Radio

Center Instrument Panel Utility Block

The center instrument panel utility block is located underneath the instrument panel, to the left of the steering column.

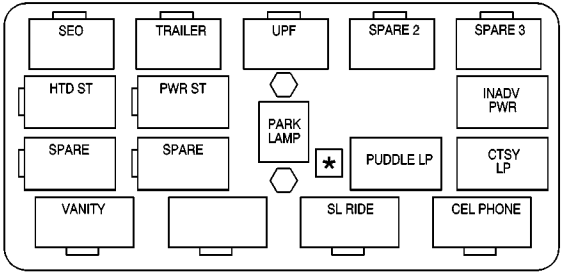

Relay Name	Usage
SEO	Special Equipment Option
TRAILER	Trailer Brake Wiring
UPF	Upfitter
SPARE 2	Not Used
SPARE 3	Not Used
HTD ST	Heated Seats
PWR ST	Power Seats
PARK LAMP	Parking Lamps
INADV PWR	Interior Lamps Feed
SPARE	Not Used
SPARE	Not Used
*FRT PRK EXPT	Not Used
PUDDLE LP	Puddle Lamps
CTSY LP	Courtesy Lamps
VANITY	Headliner Wiring
BLANK	Not Used
SL RIDE	Not Used
CEL PHONE	Not Used

Underhood Fuse Block

The underhood fuse/relay block is located near the battery in the engine compartment. See “Engine Compartment Overview” in the Index for more information on its location. Lift the cover for access to the fuse/relay block.

You will see fuses to the top right of the fuse/relay block once you remove the cover. These are spare fuses and can be used accordingly.

You can remove fuses with a fuse extractor. The fuse extractor is located in the fuse/relay block. To remove fuses if you don’t have a fuse extractor, hold the end of the fuse between your thumb and index finger and pull straight out.

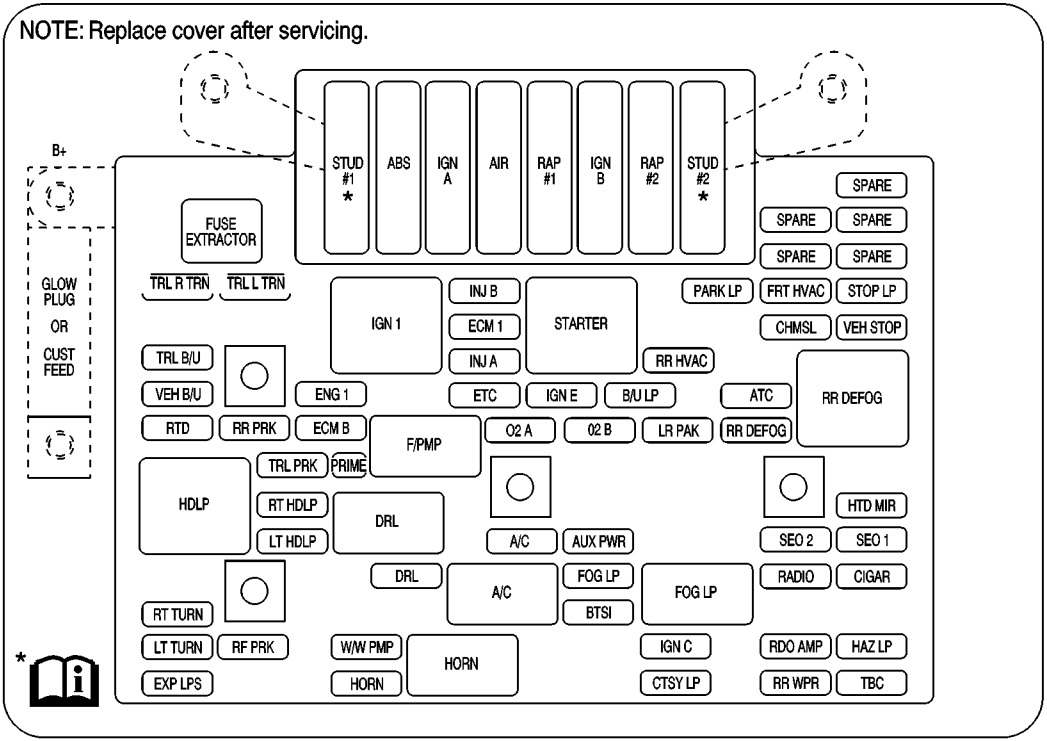
NOTE: Replace cover after servicing.
B+
GLOW PLUG OR CUST FEED
FUSE EXTRACTOR
STUD #1 *
ABS
IGN A
AIR
RAP #1
IGN B
RAP #2
STUD #2 *
SPARE
SPARE
SPARE
SPARE
SPARE
TRL R TRN
TRL L TRN
IGN 1
INJ B
ECM 1
INJ A
STARTER
PARK LP
FRT HVAC
STOP LP
CHMSL
VEH STOP
TRL B/U
VEH B/U
RTD
RR PRK
ENG 1
ECM B
ETC
IGN E
B/U LP
RR HVAC
ATC
RR DEFOG
O2 A
O2 B
LR PAK
RR DEFOG
F/PMP
TRL PRK
PRIME
HDLP
RT HDLP
LT HDLP
DRL
A/C
AUX PWR
HTD MIR
SEO 2
SEO 1
DRL
A/C
FOG LP
BTSI
FOG LP
RADIO
CIGAR
RT TURN
LT TURN
RF PRK
EXP LPS
W/W PMP
HORN
HORN
IGN C
CTSY LP
RDO AMP
HAZ LP
RR WPR
TBC
*

Name	Usage
STUD #1	Accessory Power/Trailer Wiring Feed/Load Leveling
ABS	Anti-Lock Brakes
IGN A	Ignition Switch
AIR	A.I.R. System
RAP #1	Retained Accessory Power, Power Mirrors, Power Door Locks, Power Seat(s)
IGN B	Ignition Switch
RAP #2	Retained Accessory Power/Rear Power Windows, Sunroof, Radio
STUD #2	Accessory Power/Trailer Wiring Brake Feed
TRL R TRN	Right Turn Signal Trailer Wiring
TRL L TRN	Left Turn Signal Trailer Wiring
IGN 1	Ignition, Fuel Controls
INJ-B	Ignition, Fuel Controls (Relay)

Name	Usage
STARTER	Starter (Relay)
PARK LP	Parking Lamps
FRT HVAC	Climate Control System
STOP LP	Exterior Lamps, Stoplamps
ECM 1	VCM/PCM
CHMSL	Center High Mounted Stoplamp
VEH STOP	Stoplamps, Cruise Control
TRL B/U	Backup Lamps Trailer Wiring
INJ-A	Fuel Controls, Ignition
RR HVAC	Rear Climate Control System
VEH B/U	Vehicle Backup Lamps
ENG 1	Engine Controls, Canister Purge, Fuel System
ETC	Electronic Throttle Control
IGN E	A/C Compressor Relay, Rear Window Defogger, Daytime Running Lamps, A.I.R. System

Name	Usage
B/U LP	Backup Lamps, Automatic Transmission Shift Lock Control System
ATC	Automatic Transfer Case
RR DEFOG	Rear Window Defogger, Heated Mirrors (Relay)
RTD	Autoride™ (Real Time Damping)
RR PRK	Right Rear Parking Lamps
ECM B	VCM/PCM
F/PMP	Fuel Pump (Relay)
O2 A	Oxygen Sensors
O2 B	Oxygen Sensors
LR PRK	Left Rear Parking Lamps
RR DEFOG	Rear Window Defogger, Heated Mirrors
HDLP	Headlamps (Relay)
TRL PRK	Parking Lamps Trailer Wiring
PRIME	Not Used

Name	Usage
RT HDLP	Right Headlamps
DRL	Daytime Running Lamps (Relay)
HTD MIR	Heated Mirrors
LT HDLP	Left Headlamps
A/C	Air Conditioning
AUX PWR	Cigarette Lighter, Auxiliary Power Outlets
SEO 2	Special Equipment Option Power, Power Seats
SEO 1	Special Equipment Option Power
DRL	Daytime Running Lamps
A/C	A/C (Relay)
FOG LP	Fog Lamps
FOG LP	Fog Lamps (Relay)
RADIO	Audio System, Instrument Cluster, Climate Control System
CIGAR	Cigarette Lighter, Auxiliary Power Outlets

Name	Usage
RT TURN	Right Turn Signals
BTSI	Automatic Transmission Shift Lock Control System
LT TURN	Left Turn Signals
FR PRK	Front Parking Lamps, Sidemarker Lamps
W/W PMP	Windshield Washer Pump
HORN	Horn (Relay)
IGN C	Ignition Switch, Fuel Pump, PRND321 Display, Crank
RDO AMP	Radio Amplifier
HAZ LP	Exterior Lamps, Hazard Lamps
EXP LPS	Not Used
HORN	Horn
CTSY LP	Interior Lamps
RR WPR	Rear Wipers
TBC	Body Control Module, Remote Keyless Entry, Headlamps

Replacement Bulbs

Bulb	Number
Low-Beam Headlamps	9005 or 9005LL (Long Life) (Preferred)
High-Beam Headlamps	9005
Daytime Running Lamps (DRL)	3157KX or 4157K (Preferred)
Front Marker Lamp	194
Front Parking and Turn Lamp	3157 or 3157K (long life)
Rear Marker Lamp, Taillamp and Stop Lamp	3157
Rear Turn Lamp	3157
Back-up Lamp	3157

For replacement bulbs not listed here, please consult your dealer.

Capacities and Specifications

Please refer to “Recommended Fluids and Lubricants” in the Index for more information. All capacities are approximate.

Engine	VORTEC 6000
Type	V8
VIN Code	U
Spark Plug Gap	0.060 inches (1.52 mm)

Wheels and Tires

Wheel Nut Torque	140 lb-ft (190 N·m)
Tire Pressure	See the Certification/Tire label on the rear edge of the driver’s door.

Capacities

Cooling System	19.0 quarts (18.0 L)
Engine Oil with Filter	6.0 quarts (5.7 L)
Fuel Tank	
Yukon Denali	26.0 U.S. gallons (98.0 L)
Yukon XL Denali	31.0 U.S. gallons (117.0 L)

Air Conditioning Refrigerant Capacity

If you do your own service work, you’ll need the proper service manual. See “Doing Your Own Service Work” in the Index for additional information. It is recommended that service work on your air conditioning system be performed by a qualified technician.

Air Conditioning Refrigerant R-134a	
Yukon Denali	2.71 lbs. (1.23 kg)
Yukon XL Denali	3.0 lbs. (1.36 kg)

Use Refrigerant Oil, R-134a Systems

Normal Maintenance Replacement Parts

Replacement part numbers listed in this section are based on the latest information available at the time of printing, and are subject to change. If a part listed in this manual is not the same as the part used in your vehicle when it was built, or if you have any questions, please contact your GM dealer.

These specifications are for information only. If you have any questions, see the service manual.

Oil Filter*	PF59
Engine Air Cleaner/Filter*	A1518C
Passenger Compartment Air Filter Kit**	52485513
PCV Valve*	CV948C
Spark Plugs	PTZ16R15 Denso*** PZTR5A15 NGK***
Fuel Filter*	GF626
Wiper Blades (Front)**	15153642
Wiper Blade Type (Front)	ITTA
Wiper Blade Length (Front)	22.0 inches (56.0 cm)
Wiper Blades (Rear)**	22154396
Wiper Blade Type (Rear)	ITTA
Wiper Blade Length (Rear)	18.0 inches (45.0 cm)

* ACDelco® Part No.

**GM Part No.

***Spark Plug Gap is 0.060 inches

Section 7 Maintenance Schedule

This section covers the maintenance required for your vehicle. Your vehicle needs these services to retain its safety, dependability and emission control performance.

7- 2 Introduction
7- 4 Part A: Scheduled Maintenance Services
7- 5 Scheduled Maintenance
7- 16 Part B: Owner Checks and Services
7- 21 Part C: Periodic Maintenance Inspections
7- 23 Part D: Recommended Fluids and Lubricants
7- 25 Part E: Maintenance Record

IMPORTANT:
KEEP ENGINE OIL AT THE PROPER LEVEL AND CHANGE AS RECOMMENDED

GM Protection Plan

Have you purchased the GM Protection Plan? The Plan supplements your new vehicle warranties. See your Warranty and Owner Assistance booklet or your dealer for details.

Introduction

Your Vehicle and the Environment

Proper vehicle maintenance not only helps to keep your vehicle in good working condition, but also helps the environment. All recommended maintenance procedures are important. Improper vehicle maintenance can even affect the quality of the air we breathe. Improper fluid levels or the wrong tire inflation can increase the level of emissions from your vehicle. To help protect our environment, and to keep your vehicle in good condition, please maintain your vehicle properly.

Maintenance Requirements

Maintenance intervals, checks, inspections and recommended fluids and lubricants as prescribed in this manual are necessary to keep your vehicle in good working condition. Any damage caused by failure to follow recommended maintenance may not be covered by warranty.

How This Section is Organized

This maintenance schedule is divided into five parts:

“Part A: Scheduled Maintenance Services” explains what to have done and how often. Some of these services can be complex, so unless you are technically qualified and have the necessary equipment, you should let your dealer’s service department or another qualified service center do these jobs.

⚠ CAUTION:

Performing maintenance work on a vehicle can be dangerous. In trying to do some jobs, you can be seriously injured. Do your own maintenance work only if you have the required know-how and the proper tools and equipment for the job. If you have any doubt, have a qualified technician do the work.

If you want to get the service information, see “Service and Owner Publications” in the Index.

“Part B: Owner Checks and Services” tells you what should be checked and when. It also explains what you can easily do to help keep your vehicle in good condition.

“Part C: Periodic Maintenance Inspections” explains important inspections that your dealer’s service department or another qualified service center should perform.

“Part D: Recommended Fluids and Lubricants” lists some recommended products necessary to help keep your vehicle properly maintained. These products, or their equivalents, should be used whether you do the work yourself or have it done.

“Part E: Maintenance Record” is a place for you to record and keep track of the maintenance performed on your vehicle. Keep your maintenance receipts. They may be needed to qualify your vehicle for warranty repairs.

Part A: Scheduled Maintenance Services

Using Your Maintenance Schedule

We at General Motors want to help you keep your vehicle in good working condition. But we don't know exactly how you'll drive it. You may drive very short distances only a few times a week. Or you may drive long distances all the time in very hot, dusty weather. You may use your vehicle in making deliveries. Or you may drive it to work, to do errands or in many other ways.

Because of all the different ways people use their vehicles, maintenance needs vary. You may need more frequent checks and replacements. So please read the following and note how you drive. If you have any questions on how to keep your vehicle in good condition, see your dealer.

This part tells you the maintenance services you should have done and when you should schedule them. If you go to your dealer for your service needs, you'll know that GM-trained and supported service people will perform the work using genuine GM parts.

The proper fluids and lubricants to use are listed in Part D. Make sure whoever services your vehicle uses these. All parts should be replaced and all necessary repairs done before you or anyone else drives the vehicle.

This schedule is for vehicles that:

- carry passengers and cargo within recommended limits. You will find these limits on your vehicle's Certification/Tire label. See "Loading Your Vehicle" in the Index.
- are driven on reasonable road surfaces within legal driving limits.
- use the recommended fuel. See "Fuel" in the Index.

The services shown in this schedule up to 100,000 miles (166 000 km) should be repeated after 100,000 miles (166 000 km) at the same intervals for the life of this vehicle. The services shown at 150,000 miles (240 000 km) should be repeated at the same interval after 150,000 miles (240 000 km) for the life of this vehicle.

See “Owner Checks and Services” and “Periodic Maintenance Inspections” following.

Footnotes

† The U.S. Environmental Protection Agency or the California Air Resources Board has determined that the failure to perform this maintenance item will not nullify the emission warranty or limit recall liability prior to the completion of the vehicle’s useful life. We, however, urge that all recommended maintenance services be performed at the indicated intervals and the maintenance be recorded.

+ A good time to check your brakes is during tire rotation. See “Brake System Inspection” under “Periodic Maintenance Inspections” in Part C of this schedule.

Engine Oil and Chassis Lubrication Scheduled Maintenance

Change engine oil and filter as indicated by the GM Oil Life System™ (or every 12 months, whichever occurs first). Reset the system.

Your vehicle has a computer system that lets you know when to change the engine oil and filter. This is based on engine revolutions and engine temperature, and not on mileage. Based on driving conditions, the mileage at which an oil change will be indicated can vary considerably. For the oil life system to work properly, you must reset the system every time the oil is changed.

When the system has calculated that oil life has been diminished, it will indicate that an oil change is necessary. A CHANGE ENGINE OIL message will come on. Change your oil as soon as possible within the next two times you stop for fuel. It is possible that, if you are driving under the best conditions, the oil life system may not indicate that an oil change is necessary for over a year. However, your engine oil and filter must be changed at least once a year and at this time the system must be reset. It is also important to check your oil regularly and keep it at the proper level.

If the system is ever reset accidentally, you must change your oil at 3,000 miles (5 000 km) since your last oil change. Remember to reset the oil life system whenever the oil is changed. See “Oil Life System” in the Index for information on resetting the system.

An Emission Control Service.

Lubricate chassis components with each engine oil and filter change. Lubricate the front suspension, ball joints, steering linkage, transmission shift linkage and parking brake cable guides. Ball joints should not be lubricated unless their temperature is 10°F (-12°C) or higher, or they could be damaged.

ENGINE OIL CHANGE		
DATE	ACTUAL MILEAGE	SERVICED BY:

ENGINE OIL CHANGE		
DATE	ACTUAL MILEAGE	SERVICED BY:

ENGINE OIL CHANGE		
DATE	ACTUAL MILEAGE	SERVICED BY:

ENGINE OIL CHANGE		
DATE	ACTUAL MILEAGE	SERVICED BY:

7,500 Miles (12 500 km)

- ☐ Check rear/front axle fluid level and add fluid as needed. Check constant velocity joints and axle seals for leaking.
- ☐ Rotate tires. See “Tire Inspection and Rotation” in the Index for proper rotation pattern and additional information. *(See footnote +.)*

DATE	
ACTUAL MILEAGE	SERVICED BY:

15,000 Miles (25 000 km)

- ☐ Replace passenger compartment air filter. If you drive regularly under dusty conditions, the filter may require replacement more often.
- ☐ Check rear/front axle fluid level and add fluid as needed. Check constant velocity joints and axle seals for leaking.
- ☐ Rotate tires. See “Tire Inspection and Rotation” in the Index for proper rotation pattern and additional information. *(See footnote +.)*

DATE	
ACTUAL MILEAGE	SERVICED BY:

22,500 Miles (37 500 km)

- ☐ Check rear/front axle fluid level and add fluid as needed. Check constant velocity joints and axle seals for leaking.
- ☐ Rotate tires. See “Tire Inspection and Rotation” in the Index for proper rotation pattern and additional information. *(See footnote +.)*

DATE	
ACTUAL MILEAGE	SERVICED BY:

30,000 Miles (50 000 km)

DATE	
ACTUAL MILEAGE	SERVICED BY:

- ☐ Replace passenger compartment air filter. If you drive regularly under dusty conditions, the filter may require replacement more often.
- ☐ Check rear/front axle fluid level and add fluid as needed. Check constant velocity joints and axle seals for leaking.
- ☐ Rotate tires. See “Tire Inspection and Rotation” in the Index for proper rotation pattern and additional information. *(See footnote +.)*
- ☐ Replace fuel filter.
  An Emission Control Service. (See footnote †.)

37,500 Miles (62 500 km)

DATE	
ACTUAL MILEAGE	SERVICED BY:

- ☐ Check rear/front axle fluid level and add fluid as needed. Check constant velocity joints and axle seals for leaking.
- ☐ Rotate tires. See “Tire Inspection and Rotation” in the Index for proper rotation pattern and additional information. *(See footnote +.)*

45,000 Miles (75 000 km)

DATE	
ACTUAL MILEAGE	SERVICED BY:

- ☐ Replace passenger compartment air filter. If you drive regularly under dusty conditions, the filter may require replacement more often.
- ☐ Check rear/front axle fluid level and add fluid as needed. Check constant velocity joints and axle seals for leaking.
- ☐ Rotate tires. See “Tire Inspection and Rotation” in the Index for proper rotation pattern and additional information. *(See footnote +.)*

50,000 Miles (83 000 km)

DATE	
ACTUAL MILEAGE	SERVICED BY:

☐ Change automatic transmission fluid and filter if the vehicle is mainly driven under one or more of these conditions:

- In heavy city traffic where the outside temperature regularly reaches 90°F (32°C) or higher.
- In hilly or mountainous terrain.
- When doing frequent trailer towing.
- Uses such as found in taxi, police or delivery service.

If you do not use your vehicle under any of these conditions, change the fluid and filter at 100,000 miles (166 000 km).

52,500 Miles (87 500 km)

DATE	
ACTUAL MILEAGE	SERVICED BY:

☐ Check rear/front axle fluid level and add fluid as needed. Check constant velocity joints and axle seals for leaking.

☐ Rotate tires. See “Tire Inspection and Rotation” in the Index for proper rotation pattern and additional information. *(See footnote +.)*

60,000 Miles (100 000 km)

DATE	
ACTUAL MILEAGE	SERVICED BY:

- ☐ Replace passenger compartment air filter. If you drive regularly under dusty conditions, the filter may require replacement more often.
- ☐ Check rear/front axle fluid level and add fluid as needed. Check constant velocity joints and axle seals for leaking.
- ☐ Rotate tires. See “Tire Inspection and Rotation” in the Index for proper rotation pattern and additional information. *(See footnote +.)*
- ☐ Inspect engine accessory drive belt.
  An Emission Control Service.
- ☐ Replace fuel filter.
  An Emission Control Service. (See footnote †.)
- ☐ Inspect Evaporative Control System. Check all fuel and vapor lines and hoses for proper hook-up, routing and condition. Check that the purge valve works properly, if equipped. Replace as needed.
  An Emission Control Service. (See footnote †.)

67,500 Miles (112 500 km)

DATE	
ACTUAL MILEAGE	SERVICED BY:

- ☐ Check rear/front axle fluid level and add fluid as needed. Check constant velocity joints and axle seals for leaking.
- ☐ Rotate tires. See “Tire Inspection and Rotation” in the Index for proper rotation pattern and additional information. *(See footnote +.)*

75,000 Miles (125 000 km)

- ☐ Replace passenger compartment air filter. If you drive regularly under dusty conditions, the filter may require replacement more often.
- ☐ Check rear/front axle fluid level and add fluid as needed. Check constant velocity joints and axle seals for leaking.
- ☐ Rotate tires. See “Tire Inspection and Rotation” in the Index for proper rotation pattern and additional information. *(See footnote +.)*

DATE	
ACTUAL MILEAGE	SERVICED BY:

82,500 Miles (137 500 km)

- ☐ Check rear/front axle fluid level and add fluid as needed. Check constant velocity joints and axle seals for leaking.
- ☐ Rotate tires. See “Tire Inspection and Rotation” in the Index for proper rotation pattern and additional information. *(See footnote +.)*

DATE	
ACTUAL MILEAGE	SERVICED BY:

90,000 Miles (150 000 km)

- ☐ Replace passenger compartment air filter. If you drive regularly under dusty conditions, the filter may require replacement more often.
- ☐ Check rear/front axle fluid level and add fluid as needed. Check constant velocity joints and axle seals for leaking.
- ☐ Replace fuel filter.
  An Emission Control Service. (See footnote †.)
- ☐ Rotate tires. See “Tire Inspection and Rotation” in the Index for proper rotation pattern and additional information. *(See footnote +.)*

DATE	
ACTUAL MILEAGE	SERVICED BY:

97,500 Miles (162 500 km)

DATE	
ACTUAL MILEAGE	SERVICED BY:

- ☐ Check rear/front axle fluid level and add fluid as needed. Check constant velocity joints and axle seals for leaking.
- ☐ Rotate tires. See “Tire Inspection and Rotation” in the Index for proper rotation pattern and additional information. *(See footnote +.)*

100,000 Miles (166 000 km)

DATE	
ACTUAL MILEAGE	SERVICED BY:

- ☐ Inspect spark plug wires.
  An Emission Control Service.
- ☐ Replace spark plugs.
  An Emission Control Service.
- ☐ Change automatic transmission fluid and filter if the vehicle is mainly driven under one or more of these conditions:
  - In heavy city traffic where the outside temperature regularly reaches 90°F (32°C) or higher.
  - In hilly or mountainous terrain.
  - When doing frequent trailer towing.
  - Uses such as found in taxi, police or delivery service.
- ☐ If you haven’t used your vehicle under severe service conditions listed previously and, therefore, haven’t changed your automatic transmission fluid, change both the fluid and filter.
- ☐ Inspect Positive Crankcase Ventilation (PCV) valve.
  An Emission Control Service.

150,000 Miles (240 000 km)

DATE	
ACTUAL MILEAGE	SERVICED BY:

☐ Drain, flush and refill cooling system (or every 60 months since last service, whichever occurs first). See “Engine Coolant” in the Index for what to use. Inspect hoses. Clean radiator, condenser, pressure cap and neck. Pressure test the cooling system and pressure cap.
An Emission Control Service.

Part B: Owner Checks and Services

Listed in this part are owner checks and services which should be performed at the intervals specified to help ensure the safety, dependability and emission control performance of your vehicle.

Be sure any necessary repairs are completed at once. Whenever any fluids or lubricants are added to your vehicle, make sure they are the proper ones, as shown in Part D.

At Each Fuel Fill

It is important for you or a service station attendant to perform these underhood checks at each fuel fill.

Engine Oil Level Check

Check the engine oil level and add the proper oil if necessary. See “Engine Oil” in the Index for further details.

Engine Coolant Level Check

Check the engine coolant level and add DEX-COOL® coolant mixture if necessary. See “Engine Coolant” in the Index for further details.

Windshield Washer Fluid Level Check

Check the windshield washer fluid level in the windshield washer tank and add the proper fluid if necessary. See “Windshield Washer Fluid” in the Index for further details.

At Least Once a Month

Tire Inflation Check

Make sure tires are inflated to the correct pressures. Don’t forget to check your spare tire. See “Tires” in the Index for further details.

Cassette Deck Service

Clean cassette deck. Cleaning should be done every 50 hours of tape play. See “Audio Systems” in the Index for further details.

At Least Twice a Year

Restraint System Check

Make sure the safety belt reminder light and all your belts, buckles, latch plates, retractors and anchorages are working properly. Look for any other loose or damaged safety belt system parts. If you see anything that might keep a safety belt system from doing its job, have it repaired. Have any torn or frayed safety belts replaced.

Also look for any opened or broken air bag coverings, and have them repaired or replaced. (The air bag system does not need regular maintenance.)

Wiper Blade Check

Inspect wiper blades for wear or cracking. Replace blade inserts that appear worn or damaged or that streak or miss areas of the windshield. Also see “Wiper Blades, Cleaning” in the Index.

Spare Tire Check

At least twice a year, after the monthly inflation check of the spare tire determines that the spare is inflated to the correct tire inflation pressure, make sure that the spare tire is stored securely. Push, pull, and then try to rotate or turn the tire. If it moves, use the wheel wrench/ratchet to tighten the cable. See “Storing the Spare Tire and Tools” in the Index.

Engine Air Cleaner Filter Restriction Indicator Check

Your vehicle has an indicator located on the air cleaner in the engine compartment that lets you know when the air cleaner filter is dirty and needs to be changed. Check indicator at least twice a year or when your engine oil is changed, whichever occurs first. See “Air Cleaner” in the Index for more information. Inspect your air cleaner filter restriction indicator more often if the vehicle is used in dusty areas or under off road conditions.

Weatherstrip Lubrication

Silicone grease on weatherstrips will make them last longer, seal better, and not stick or squeak. Apply silicone grease with a clean cloth. During very cold, damp weather more frequent application may be required. See “Recommended Fluids and Lubricants” in the Index.

Automatic Transmission Check

Check the transmission fluid level; add if needed. See “Automatic Transmission Fluid” in the Index. A fluid loss may indicate a problem. Check the system and repair if needed.

At Least Once a Year

Key Lock Cylinders Service

Lubricate the key lock cylinders with the lubricant specified in Part D.

Body Lubrication Service

Lubricate all hood latch assembly, secondary latch, pivots, spring anchor, release pawl, door hinges, liftgate hinge, liftgate linkage, liftgate handle pivot points, latch bolt, fuel door hinge, locks and folding seat hardware. Part D tells you what to use. More frequent lubrication may be required when exposed to a corrosive environment.

Starter Switch Check

⚠ CAUTION:

When you are doing this check, the vehicle could move suddenly. If it does, you or others could be injured. Follow the steps below.

1. Before you start, be sure you have enough room around the vehicle.
2. Firmly apply both the parking brake and the regular brake. See “Parking Brake” in the Index if necessary.

   Do not use the accelerator pedal, and be ready to turn off the engine immediately if it starts.
3. Try to start the engine in each gear. The starter should work only in PARK (P) or NEUTRAL (N). If the starter works in any other position, your vehicle needs service.

Automatic Transmission Shift Lock Control System Check

⚠ CAUTION:

When you are doing this check, the vehicle could move suddenly. If it does, you or others could be injured. Follow the steps below.

1. Before you start, be sure you have enough room around the vehicle. It should be parked on a level surface.
2. Firmly apply the parking brake. See “Parking Brake” in the Index if necessary.

   Be ready to apply the regular brake immediately if the vehicle begins to move.
3. With the engine off, turn the key to the RUN position, but don’t start the engine. Without applying the regular brake, try to move the shift lever out of PARK (P) with normal effort. If the shift lever moves out of PARK (P), your vehicle needs service.

Ignition Transmission Lock Check

While parked, and with the parking brake set, try to turn the ignition key to LOCK in each shift lever position.

- The key should turn to LOCK only when the shift lever is in PARK (P).
- The key should come out only in LOCK.

Parking Brake and Automatic Transmission PARK (P) Mechanism Check

⚠ CAUTION:

When you are doing this check, your vehicle could begin to move. You or others could be injured and property could be damaged. Make sure there is room in front of your vehicle in case it begins to roll. Be ready to apply the regular brake at once should the vehicle begin to move.

Park on a fairly steep hill, with the vehicle facing downhill. Keeping your foot on the regular brake, set the parking brake.

- To check the parking brake's holding ability: With the engine running and transmission in NEUTRAL (N), slowly remove foot pressure from the regular brake pedal. Do this until the vehicle is held by the parking brake only.
- To check the PARK (P) mechanism's holding ability: With the engine running, shift to PARK (P). Then release the parking brake followed by the regular brake.

Underbody Flushing Service

At least every spring, use plain water to flush any corrosive materials from the underbody. Take care to clean thoroughly any areas where mud and other debris can collect.

Part C: Periodic Maintenance Inspections

Listed in this part are inspections and services which should be performed at least twice a year (for instance, each spring and fall). *You should let your dealer's service department or other qualified service center do these jobs. Make sure any necessary repairs are completed at once.*

Proper procedures to perform these services may be found in a service manual. See “Service and Owner Publications” in the Index.

Steering and Suspension Inspection

Inspect the front and rear suspension and steering system for damaged, loose or missing parts, signs of wear or lack of lubrication. Inspect the power steering lines and hoses for proper hook-up, binding, leaks, cracks, chafing, etc.

Exhaust System Inspection

Inspect the complete exhaust system. Inspect the body near the exhaust system. Look for broken, damaged, missing or out-of-position parts as well as open seams, holes, loose connections or other conditions which could cause a heat build-up in the floor pan or could let exhaust fumes into the vehicle. See “Engine Exhaust” in the Index.

Fuel System Inspection

Inspect the complete fuel system for damage or leaks.

Engine Cooling System Inspection

Inspect the hoses and have them replaced if they are cracked, swollen or deteriorated. Inspect all pipes, fittings and clamps; replace as needed. Clean the outside of the radiator and air conditioning condenser. To help ensure proper operation, a pressure test of the cooling system and pressure cap is recommended at least once a year.

Transfer Case and Front Axle (All-Wheel Drive) Inspection

Every 12 months or at engine oil change intervals, check front axle and transfer case and add lubricant when necessary. A fluid loss could indicate a problem; check and have it repaired, if needed. Check vent hose at transfer case for kinks and proper installation.

Brake System Inspection

Inspect the complete system. Inspect brake lines and hoses for proper hook-up, binding, leaks, cracks, chafing, etc. Inspect disc brake pads for wear and rotors for surface condition. Inspect other brake parts, including calipers, parking brake, etc. You may need to have your brakes inspected more often if your driving habits or conditions result in frequent braking.

Part D: Recommended Fluids and Lubricants

Fluids and lubricants identified below by name, part number or specification may be obtained from your dealer.

USAGE	FLUID/LUBRICANT
Engine Oil	Engine oil with the American Petroleum Institute Certified for Gasoline Engines starburst symbol of the proper viscosity. To determine the preferred viscosity for your vehicle's engine, see "Engine Oil" in the Index.
Engine Coolant	50/50 mixture of clean, drinkable water and use only GM Goodwrench® DEX-COOL® or Havoline® DEX-COOL® Coolant. See "Engine Coolant" in the Index.

USAGE	FLUID/LUBRICANT
Hydraulic Brake System	Delco Supreme 11® Brake Fluid (GM Part No. 12377967 or equivalent DOT-3 brake fluid).
Windshield Washer Solvent	GM Optikleen® Washer Solvent (GM Part No. 1051515) or equivalent.
Power Steering System	GM Power Steering Fluid (GM Part No. 1052884 - 1 pint, 1050017 - 1 quart, or equivalent).
Automatic Transmission	DEXRON®-III Automatic Transmission Fluid.
Key Lock Cylinders	Multi-Purpose Lubricant, Superlube® (GM Part No. 12346241 or equivalent).
Chassis Lubrication	Chassis Lubricant (GM Part No. 12377985 or equivalent) or lubricant meeting requirements of NLGI # 2, Category LB or GC-LB.

USAGE	FLUID/LUBRICANT
Front and Rear Axle	SAE 75W-90 Synthetic Axle Lubricant (GM Part No. 12378261) or equivalent meeting GM Specification 9986115.
Transfer Case	DEXRON®-III Automatic Transmission Fluid.
Front Axle Propshaft Spline	Spline Lubricant, Special Lubricant (GM Part No. 12345879) or lubricant meeting requirements of GM 9985830.
Hood Latch Assembly, Secondary Latch, Pivots, Spring Anchor and Release Pawl	Lubriplate® Lubricant Aerosol (GM Part No. 12346293 or equivalent) or lubricant meeting requirements of NLGI # 2, Category LB or GC-LB.

USAGE	FLUID/LUBRICANT
Hood Hinges	Multi-Purpose Lubricant, Superlube® (GM Part No. 12346241 or equivalent).
Body Door Hinge Pins, Tailgate Hinge and Linkage, Folding Seat and Fuel Door Hinge	Multi-Purpose Lubricant, Superlube® (GM Part No. 12346241 or equivalent).
Outer Tailgate Handle Pivot Points	Multi-Purpose Lubricant, Superlube® (GM Part No. 12346241 or equivalent).
Weatherstrip Conditioning	Dielectric Silicone Grease (GM Part No. 12345579 or equivalent).
Weatherstrip Squeaks	Synthetic Grease with Teflon, Superlube® (GM Part No. 12371287 or equivalent).

Part E: Maintenance Record

After the scheduled services are performed, record the date, odometer reading and who performed the service in the boxes provided after the maintenance interval. Any additional information from “Owner Checks and Services” or “Periodic Maintenance” can be added on the following record pages. Also, you should retain all maintenance receipts. Your owner information portfolio is a convenient place to store them.

Maintenance Record			
DATE	ODOMETER READING	SERVICED BY	MAINTENANCE PERFORMED

Maintenance Record

DATE	ODOMETER READING	SERVICED BY	MAINTENANCE PERFORMED

Section 8 Customer Assistance Information

Here you will find out how to contact GMC if you need assistance. This section also tells you how to obtain service publications and how to report any safety defects.

8-2 Customer Satisfaction Procedure
8-4 Customer Assistance for Text Telephone (TTY) Users
8-4 Customer Assistance Offices
8-5 GM Mobility Program for Persons with Disabilities
8-6 Roadside Assistance
8-7 Canadian Roadside Assistance
8-8 Courtesy Transportation
8-10 Warranty Information
8-10 Reporting Safety Defects to the United States Government
8-11 Reporting Safety Defects to the Canadian Government
8-11 Reporting Safety Defects to General Motors

Customer Satisfaction Procedure

Your satisfaction and goodwill are important to your dealer and to GMC. Normally, any concerns with the sales transaction or the operation of your vehicle will be resolved by your dealer's sales or service departments. Sometimes, however, despite the best intentions of all concerned, misunderstandings can occur. If your concern has not been resolved to your satisfaction, the following steps should be taken:

STEP ONE -- Discuss your concern with a member of dealership management. Normally, concerns can be quickly resolved at that level. If the matter has already been reviewed with the sales, service or parts manager, contact the owner of the dealership or the general manager.

STEP TWO -- If after contacting a member of dealership management, it appears your concern cannot be resolved by the dealership without further help, contact the GMC Consumer Relations Manager by calling 1-800-GMC-8782 (1-800-462-8782, Customer Assistance prompt). In Canada, contact GM of Canada Customer Communication Centre in Oshawa by calling 1-800-263-3777 (English) or 1-800-263-7854 (French).

We encourage you to call the toll-free number in order to give your inquiry prompt attention. Please have the following information available to give the Customer Assistance Representative:

- Vehicle Identification Number (This is available from the vehicle registration or title, or the plate at the top left of the instrument panel and visible through the windshield.)
- Dealership name and location
- Vehicle delivery date and present mileage

When contacting GMC, please remember that your concern will likely be resolved at a dealer's facility. That is why we suggest you follow Step One first if you have a concern.

STEP THREE -- Both General Motors and your dealer are committed to making sure you are completely satisfied with your new vehicle. However, if you continue to remain unsatisfied after following the procedure outlined in Steps One and Two, you should file with the GM/BBB Auto Line Program to enforce any additional rights you may have. Canadian owners refer to your Warranty and Owner Assistance Information booklet for information on the Canadian Motor Vehicle Arbitration Plan (CAMVAP).

The BBB Auto Line Program is an out of court program administered by the Council of Better Business Bureaus to settle automotive disputes regarding vehicle repairs or the interpretation of the New Vehicle Limited Warranty. Although you may be required to resort to this informal dispute resolution program prior to filing a court action, use of the program is free of charge and your case will generally be heard within 40 days. If you do not agree with the decision given in your case, you may reject it and proceed with any other venue for relief available to you.

You may contact the BBB using the toll-free telephone number or write them at the following address:

BBB Auto Line
Council of Better Business Bureaus, Inc.
4200 Wilson Boulevard
Suite 800
Arlington, VA 22203-1804

Telephone: 1-800-955-5100

This program is available in all 50 states and the District of Columbia. Eligibility is limited by vehicle age, mileage and other factors. General Motors reserves the right to change eligibility limitations and/or discontinue its participation in this program.

Customer Assistance for Text Telephone (TTY) Users

To assist customers who are deaf, hard of hearing, or speech-impaired and who use Text Telephones (TTYs), GMC has TTY equipment available at its Customer Assistance Center. Any TTY user can communicate with GMC by dialing: 1-800-GMC-8583 (462-8583). (TTY users in Canada can dial 1-800-263-3830.)

Customer Assistance Offices

GMC encourages customers to call the toll-free number for assistance. If a U.S. customer wishes to write to GMC, the letter should be addressed to GMC's Customer Assistance Center.

United States

Pontiac-GMC Customer Assistance Center
P.O. Box 33172
Detroit, MI 48232-5172

1-800-GMC-8782 (462-8782)
1-800-GMC-8583 (462-8583)
(For Text Telephone devices (TTYs))
Roadside Assistance: 1-800-GMC-8782 (462-8782)

From:

Puerto Rico:	1-800-496-9992 (English) 1-800-496-9993 (Spanish)
U.S. Virgin Islands:	1-800-496-9994
Fax Number:	313-381-0022

Canada

General Motors of Canada Limited
Customer Communication Centre, 163-005
1908 Colonel Sam Drive
Oshawa, Ontario L1H 8P7

1-800-263-3777 (English)
1-800-263-7854 (French)
1-800-263-3830 (For Text Telephone devices (TTYs))
Roadside Assistance: 1-800-268-6800

All Overseas Locations

Please contact the local General Motors Business Unit.

Mexico, Central America and Caribbean Islands/Countries (Except Puerto Rico and U.S. Virgin Islands)

General Motors de Mexico, S. de R.L. de C.V.
Customer Assistance Center
Paseo de la Reforma # 2740
Col. Lomas de Bezares
C.P. 11910, Mexico, D.F.

01-800-508-0000
Long Distance: 011-52 - 53 29 0 800

GM Mobility Program for Persons with Disabilities

This program, available to qualified applicants, can reimburse you up to $1,000 toward aftermarket driver or passenger adaptive equipment you may require for your vehicle (hand controls, wheelchair/scooter lifts, etc.).

This program can also provide you with free resource information, such as area driver assessment centers and mobility equipment installers. The program is available for a limited period of time from the date of vehicle purchase/lease. See your dealer for more details or call the GM Mobility Assistance Center at 1-800-323-9935. Text telephone (TTY) users, call 1-800-833-9935.

GM of Canada also has a Mobility Program. Call 1-800-GM-DRIVE (463-7483) for details. When calling from outside Canada, please dial 1-905-644-3063. All TTY users call 1-800-263-3830.

Roadside Assistance

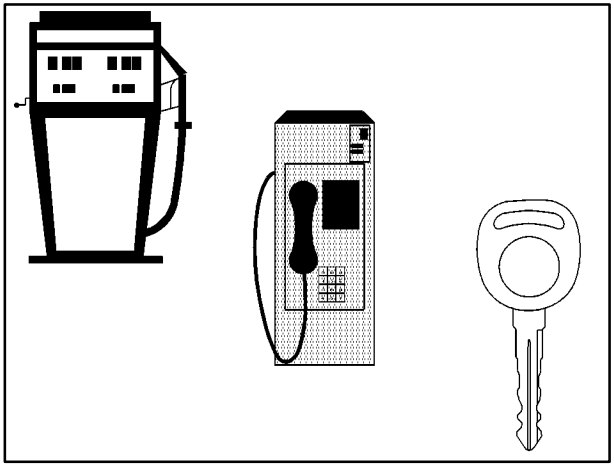

GMC's Roadside Assistance provides stranded owners with over-the-phone roadside repairs, location of the nearest GMC dealer or the following special services:

Flat Tire Change: Installation of spare tire will be covered at no charge (customer is responsible for repair or replacement of tire).

Fuel Delivery: Delivery of enough fuel for the customer to get to the nearest service station (up to $5.00) will be covered.

Jump Start: No-start situations which require a battery jump start will be covered at no charge.

Lock Out: Replacement keys or locksmith service will be covered at no charge if you are unable to gain entry into your vehicle. Delivery of the replacement key will be covered at no charge within 10 miles (16 km).

Emergency Towing Service: Towing to the nearest GMC dealer for warranty related disablements will be covered.

Trip Routing: Custom-made, computerized highlighted maps using the most direct or scenic route are provided free of charge. Maps include points of interest and a list of GMC dealers along the route. Also included is a list of hotels along the route that are discounted through affiliation with "Quest International." Trip Routing is available through Roadside Assistance by calling 1-800-GMC-8782 (462-8782). Please be prepared to provide your Vehicle Identification Number (VIN). Allow five working days for fulfillment.

Trip Interruption Assistance: GMC will reimburse any reasonable trip interruption expenses (up to $500.00) when directly associated with warranty disablement. Trip Interruption service covers expenses such as meals and overnight lodging if vehicle disablement occurs at least 150 miles (240 km) from your home or rental property. You will be required to obtain prior approval from GMC Roadside Assistance and pay for expenses at the time of disablement. Original receipts should be submitted to GMC Roadside Assistance for reimbursement. A service representative will provide assistance when you call.

The Roadside Assistance services listed are available to retail and retail lease customers operating 2002 GMC light duty trucks for a period of 3 years/36,000 miles (60 000 km). All services must be pre-arranged by GMC Roadside Assistance.

Over-the-phone assistance, such as providing the name of the closest dealer or minor technical advice, etc., is available to all owner/operators of GMC trucks, regardless of vehicle or mileage.

Just dial GMC Roadside Assistance at 1-800-GMC-8782 (1-800-462-8782, Roadside Assistance prompt) to reach a qualified representative who can assist you. Text telephone (TTY) users, call 1-888-889-2438.

Your Roadside Assistance representative will ask for the following information when your call is received:

- Vehicle Identification Number (VIN)
- Name and home address
- Telephone number and location from which you are calling
- Location, license plate number and color of your GMC truck
- Mileage of vehicle and description of problem

Roadside Assistance is available 24 hours a day, 7 days a week, 365 days a year, including weekends and holidays. Should you have any questions about roadside assistance, call the GMC Roadside Assistance Center or contact your dealer.

Roadside Assistance is not part of or included in the coverage provided by the New Vehicle Limited Warranty. GMC reserves the right to make any changes or discontinue the Roadside Assistance program at any time without notification.

Canadian Roadside Assistance

Vehicles purchased in Canada have an extensive Roadside Assistance program accessible from anywhere in Canada or the United States. Please refer to the Warranty and Owner Assistance Information book or call 1-800-268-6800 for emergency services.

Courtesy Transportation

GMC has always exemplified quality and value in its offering of motor vehicles. To enhance your ownership experience, we and our participating dealers are proud to offer Courtesy Transportation, a customer support program for new vehicles.

The Courtesy Transportation program is offered to retail purchase/lease customers in conjunction with the Bumper-to-Bumper coverage provided by the New Vehicle Limited Warranty. Several transportation options are available when warranty repairs are required. This will reduce your inconvenience during warranty repairs.

Plan Ahead When Possible

When your vehicle requires warranty service, you should contact your dealer and request an appointment. By scheduling a service appointment and advising your service consultant of your transportation needs, your dealer can help minimize your inconvenience.

If your vehicle cannot be scheduled into the service department immediately, keep driving it until it can be scheduled for service, unless, of course, the problem is safety-related. If it is, please call your dealership, let them know this, and ask for instructions.

If the dealer requests that you simply drop the vehicle off for service, you are urged to do so as early in the work day as possible to allow for same day repair.

Transportation Options

Warranty service can generally be completed while you wait. However, if you are unable to wait GMC helps minimize your inconvenience by providing several transportation options. Depending on the circumstances, your dealer can offer you one of the following:

Shuttle Service

Participating dealers can provide you with shuttle service to get you to your destination with minimal interruption of your daily schedule. This includes a one way shuttle ride to a destination up to 10 miles from the dealership.

Public Transportation or Fuel Reimbursement

If your vehicle requires overnight warranty repairs, reimbursement up to $30 per day (five days maximum) may be available for the use of public transportation such as taxi or bus. In addition, should you arrange transportation through a friend or relative, reimbursement for reasonable fuel expenses up to $10 per day (five day maximum) may be available. Claim amounts should reflect actual costs and be supported by original receipts.

Courtesy Rental Vehicle

When your vehicle is unavailable due to overnight warranty repairs, your dealer may arrange to provide you with a courtesy rental vehicle or reimburse you for a rental vehicle you obtained, at actual cost, up to a maximum of $30.00 per day supported by receipts. This requires that you sign and complete a rental agreement and meet state, local and rental vehicle provider requirements. Requirements vary and may include minimum age requirements, insurance coverage, credit card, etc.

You are responsible for fuel usage charges and may also be responsible for taxes, levies, usage fees, excessive mileage or rental usage beyond the completion of the repair.

Generally it is not possible to provide a like-vehicle as a courtesy rental.

Additional Program Information

Courtesy Transportation is available during the Bumper-to-Bumper warranty coverage period, but it *is not* part of the New Vehicle Limited Warranty. A separate booklet entitled “Warranty and Owner Assistance Information” furnished with each new vehicle provides detailed warranty coverage information.

Courtesy Transportation is available only at participating dealers and all program options, such as shuttle service, may not be available at every dealer. Please contact your dealer for specific information about availability. All Courtesy Transportation arrangements will be administered by appropriate dealer personnel.

Canadian Vehicles: For warranty repairs during the Complete Vehicle Coverage period of the General Motors of Canada New Vehicle Limited Warranty, alternative transportation may be available under the Courtesy Transportation Program. Please consult your dealer for details.

General Motors reserves the right to unilaterally modify, change or discontinue Courtesy Transportation at any time and to resolve all questions of claim eligibility pursuant to the terms and conditions described herein at its sole discretion.

Warranty Information

Your vehicle comes with a separate warranty booklet that contains detailed warranty information.

REPORTING SAFETY DEFECTS TO THE UNITED STATES GOVERNMENT

If you believe that your vehicle has a defect which could cause a crash or could cause injury or death, you should immediately inform the National Highway Traffic Safety Administration (NHTSA), in addition to notifying General Motors.

If NHTSA receives similar complaints, it may open an investigation, and if it finds that a safety defect exists in a group of vehicles, it may order a recall and remedy campaign. However, NHTSA cannot become involved in individual problems between you, your dealer or General Motors.

To contact NHTSA, you may either call the Auto Safety Hotline toll-free at 1-800-424-9393 (or 366-0123 in the Washington, D.C. area) or write to:

NHTSA, U.S. Department of Transportation
Washington, D.C. 20590

You can also obtain other information about motor vehicle safety from the hotline.

REPORTING SAFETY DEFECTS TO THE CANADIAN GOVERNMENT

If you live in Canada, and you believe that your vehicle has a safety defect, you should immediately notify Transport Canada, in addition to notifying General Motors of Canada Limited. You may write to:

Transport Canada
330 Sparks Street
Tower C
Ottawa, Ontario K1A 0N5

REPORTING SAFETY DEFECTS TO GENERAL MOTORS

In addition to notifying NHTSA (or Transport Canada) in a situation like this, we certainly hope you'll notify us. Please call us at 1-800-GMC-8782 (1-800-462-8782), or write:

Pontiac-GMC Customer Assistance Center
P.O. Box 33172
Detroit, MI 48232-5172

In Canada, please call us at 1-800-263-3777 (English) or 1-800-263-7854 (French). Or, write:

General Motors of Canada Limited
Customer Communication Centre, 163-005
1908 Colonel Sam Drive
Oshawa, Ontario L1H 8P7

SERVICE PUBLICATIONS ORDERING INFORMATION

Service Manuals

Service Manuals have the diagnosis and repair information on engines, transmission, axle, suspension, brakes, electrical, steering, body, etc.

RETAIL SELL PRICE: $120.00

Transmission, Transaxle, Transfer Case Unit Repair Manual

This manual provides information on unit repair service procedures, adjustments and specifications for GM transmissions, transaxles and transfer cases.

RETAIL SELL PRICE: $50.00

Service Bulletins

Service Bulletins give technical service information needed to knowledgeably service General Motors cars and trucks. Each bulletin contains instructions to assist in the diagnosis and service of your vehicle.

Owner's Information

Owner publications are written specifically for owners and intended to provide basic operational information about the vehicle. The owner's manual will include the Maintenance Schedule for all models.

In-Portfolio: Includes a Portfolio, Owner's Manual and Warranty Booklet.

RETAIL SELL PRICE: $35.00

Without Portfolio: Owner's Manual only.

RETAIL SELL PRICE: $25.00

Current and Past Model Order Forms

Service Publications are available for current and past model GM vehicles. To request an order form, please specify year and model name of the vehicle.

ORDER TOLL FREE: 1-800-551-4123 – Monday-Friday 8:00 AM – 6:00 PM Eastern Time

Visit Helm, Inc. on the World Wide Web at: www.helminc.com **For Credit Card Orders Only (VISA-MasterCard-Discover)**

Helm, Incorporated • P.O. Box 07130 • Detroit, MI 48207

Prices are subject to change without notice and without incurring obligation. Allow ample time for delivery.

Note to Canadian Customers: All listed prices are quoted in U.S. funds. Canadian residents are to make checks payable in U.S. funds.