# Foreword

Welcome to the growing group of value–conscious people who drive Toyotas. We are proud of the advanced engineering and quality construction of each vehicle we build.

**This Owner's Manual explains the operation of your new Toyota. Please read it thoroughly and have all the occupants follow the instructions carefully. Doing so will help you enjoy many years of safe and trouble–free motoring. For important information about this manual and your Toyota, read the following pages carefully.**

When it comes to service, remember that your Toyota dealer knows your vehicle very well and is interested in your complete satisfaction. Your Toyota dealer will provide quality maintenance and any other assistance you may require.

If there is not a Toyota dealer near you, please call the following number:

**U.S. OWNERS:**
- When traveling in the U.S. mainland or Canada:
  Toyota Customer Experience Center **Toll–free:1–800–331–4331**
- Hawaii:
  Servco Automotive Customer Services **Toll–free:1–888–272–5515**

**CANADIAN OWNERS:**
- When traveling in Canada or the U.S. mainland:
  Toyota Canada Customer Interaction Centre **Toll–free:1–888–TOYOTA–8 or 1–888–869–6828**

**Please leave this Owner's Manual in this vehicle at the time of resale. The next owner will need this information also.**

All information and specifications in this manual are current at the time of printing. However, because of Toyota's policy of continual product improvement, we reserve the right to make changes at any time without notice.

**Please note that this manual applies to all models and explains all equipment, including options. Therefore, you may find some explanations for equipment not installed on your vehicle.**

Please access our websites for further information.

- The U.S. mainland **www.toyota.com**
- Hawaii **www.toyotahawaii.com**
- Canada **www.toyota.ca**

**TOYOTA MOTOR CORPORATION**

© 2006 TOYOTA MOTOR CORPORATION

All rights reserved. This material may not be reproduced or copied, in whole or in part, without the written permission of Toyota Motor Corporation.

# Important information about this manual

## Safety and vehicle damage warnings

Throughout this manual, you will see safety and vehicle damage warnings. You must follow these warnings carefully to avoid possible injury or damage.

The types of warnings, what they look like, and how they are used in this manual are explained as follows:

**⚠ CAUTION**

**This is a warning against anything which may cause injury to people if the warning is ignored. You are informed about what you must or must not do in order to reduce the risk of injury to yourself and others.**

***NOTICE***

***This is a warning against anything which may cause damage to the vehicle or its equipment if the warning is ignored. You are informed about what you must or must not do in order to avoid or reduce the risk of damage to your vehicle and its equipment.***

## Safety symbol

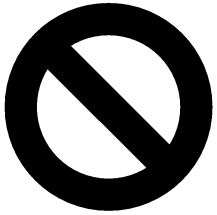

00060

**When you see the safety symbol shown above, it means: “Do not...”; “Do not do this”; or “Do not let this happen”.**

# Important information about your Toyota

## Occupant restraint systems

Toyota encourages you and your family to take the time to read Section 1–3 of this Owner's Manual carefully. In terms of helping you understand how you can receive the maximum benefit of the occupant restraint systems this vehicle provides, Section 1–3 of this Owner's Manual is the most important Section for you and your family to read.

Section 1–3 describes the function and operation concerning seats, seat belts, SRS airbags and child restraint systems of this vehicle and some potential hazards you should be aware of. These systems work together along with the overall structure of this vehicle in order to provide occupant restraint in the event of a crash. The effect of each system is enhanced when it is used properly and together with other systems. No single occupant restraint system can, by itself, provide you or your family with the equal level of restraint which these systems can provide when used together. That is why it is important for you and your family to understand the purpose and proper use of each of these systems and how they relate to each other.

The purpose of all occupant restraint systems is to help reduce the possibility of death or serious injury in the event of a collision. None of these systems, either individually or together, can ensure that there is no injury in the event of collision. However, the more you know about these systems and how to use them properly, the greater your chances become of surviving an accident without death or serious injury.

Seat belts provide the primary restraint to all occupants of the vehicle, and every occupant of the vehicle should wear seat belts properly at all times. Children should always be secured in child restraint systems that are appropriate for their age and size. SRS (Supplemental Restraint System) airbags are, as their names imply, designed to work with, and be supplemental to, seat belts and are not substitutes for them. SRS airbags can be very effective in reducing the risk of head, chest and knee injuries by preventing contact of the head, chest and knee with interior portions of the vehicle.

In order to be effective, the SRS airbags must deploy with tremendous speed. The rapid deployment of the SRS airbags makes the SRS airbags themselves potential sources of death or serious injury if an occupant is too close to an airbag, or if an object or some part of his or her body has been placed between the occupant and the airbag at the time of deployment. This is just one example of how the instructions in Section 1–3 of this Owner's Manual will help ensure proper use of the occupant restraint systems, and increase the safety they can provide to you and your family in the event of an accident.

Toyota recommends you to read the provisions in Section 1–3 carefully and refer to them as needed during your time of ownership of this vehicle.

## Event data recorder

Your vehicle has computers that monitor and control certain aspects of your vehicle. These computers assist in driving and maintaining optimal vehicle performance. Besides storing data useful for troubleshooting, there is a system to record data in a crash or a near car crash event. This is called an Event Data Recorder (EDR).

The SRS airbag sensor assembly contains the EDR. In a crash or a near car crash event, this device may record some or all of the following information:

- Engine speed
- Whether the brake pedal was applied or not
- Vehicle speed
- To what extent the accelerator pedal was depressed
- Position of the transmission selector lever
- Whether the driver and front passenger wore the seat belts or not
- Driver's seat position
- Front passenger's occupant classification
- SRS airbag deployment data

- SRS airbag system diagnostic data

If your vehicle is equipped with a vehicle stability control (VSC) system, its Electronic Control Unit (ECU) may contain another EDR. There are a variety of driving situations which include activating the VSC under which the VSC EDR will record certain information. The VSC EDR may record some or all of the following information:

- Behavior of the vehicle
- Steering wheel angle
- Vehicle speed
- To what extent the accelerator pedal was depressed
- To what extent the brake pedal was applied
- To what extent the ECU controlled the condition of the 4 wheels
- Vehicle stability control system diagnostic data

The information above is intended to be used for the purpose of improving vehicle safety performance. Unlike general data recorders, the EDR does not record sound data such as conversation between passengers.

Toyota will not disclose the data recorded in an EDR to a third party except when:

- An agreement from the vehicle's owner (or the leasing company for a leased vehicle) is obtained
- Officially requested by the police or other authorities
- Used as a defense for Toyota in a law suit
- Ordered by the court

However, if necessary Toyota will:

- Use the data for research on Toyota vehicle safety performance
- Disclose the data to a third party for research purposes without disclosing details of the vehicle owner, and only when it is deemed necessary
- Disclose summarized data cleared of vehicle identification information to a non–Toyota organization for research purposes

## New vehicle warranty

Your new vehicle is covered by the following Toyota limited warranties:

- New vehicle warranty
- Emission control systems warranty
- Others

For further information, please refer to the “Owner’s Warranty Information Booklet” or “Owner’s Manual Supplement”.

## Your responsibility for maintenance

It is the owner’s responsibility to make sure that the specified maintenance is performed. Section 6 gives details of these maintenance requirements. Also included in Section 6 is general maintenance. For scheduled maintenance information, please refer to the “Scheduled Maintenance Guide” or “Owner’s Manual Supplement”.

## Important health and safety information about your Toyota

**⚠ CAUTION**

- **WARNING: Engine exhaust, some of its constituents, and a wide variety of automobile components contain or emit chemicals known to the State of California to cause cancer and birth defects and other reproductive harm. In addition, oils, fuels and fluids contained in vehicles as well as waste produced by component wear contain or emit chemicals known to the State of California to cause cancer and birth defects or other reproductive harm.**
- **Battery posts, terminals and related accessories contain lead and lead compounds. Wash your hands after handling. Used engine oil contains chemicals that have caused cancer in laboratory animals. Always protect your skin by washing thoroughly with soap and water.**

## Accessories, spare parts and modification of your Toyota

A wide variety of non−genuine spare parts and accessories for Toyota vehicles are currently available in the market. You should know that Toyota does not warrant these products and is not responsible for their performance, repair, or replacement, or for any damage they may cause to, or adverse effect they may have on, your Toyota vehicle.

This vehicle should not be modified with non−genuine Toyota products. Modification with non−genuine Toyota products could affect its performance, safety or durability, and may even violate governmental regulations. In addition, damage or performance problems resulting from the modification may not be covered under warranty.

## Spark ignition system of your Toyota

The spark ignition system in your Toyota meets all requirements of the Canadian Interference−Causing Equipment Standard.

## Installation of a mobile two−way radio system

As the installation of a mobile two−way radio system in your vehicle could affect electronic systems such as multiport fuel injection system/sequential multiport fuel injection system, electronic throttle control system, cruise control system, dynamic laser cruise control system, anti−lock brake system, traction control system, vehicle stability control system, SRS airbag system and seat belt pretensioner system, be sure to check with your Toyota dealer for precautionary measures or special instructions regarding installation.

## Perchlorate Material

Special handling and disposal restrictions may apply, See www.dtsc.ca.gov/hazardouswaste/perchlorate.

Your vehicle has components that may contain perchlorate. These components may include airbag, seat belt pretensioners, and wireless remote control batteries.

## Smart key system

Users of any electrical medical devices such as implanted pacemakers should consult the manufacturer of the device for information about its operation under the influence of radio waves. Radio waves could have unexpected effects on the operation of such medical devices. For details, see “Keys” on page 14 and “Smart key system” on page 27 in Section 1–2.

## Tires and loading on your Toyota

Underinflated or overinflated tire pressure and excess load may result in the deterioration of steering ability and braking ability, leading to an accident. Check the tire inflation pressure periodically and be sure to stay with the load limits given in this Owner’s Manual. For details about tire inflation pressure and load limits, see pages 289 and 361.

## Scrapping of your Toyota

The SRS airbag and seat belt pretensioner devices in your Toyota contain explosive chemicals. If the vehicle is scrapped with the airbags and pretensioners left as they are, this may cause an accident such as fire. Be sure to have the systems of the SRS airbag and seat belt pretensioner removed and disposed of by the qualified service shop or by your Toyota dealer before you dispose of your vehicle.

## Leak detection pump

This pump performs fuel evaporation leakage check. This check is done approximately five hours after the engine is turned off. So you may hear sound coming from underneath the luggage compartment for several minutes. It does not indicate a malfunction.

# SECTION 1 – 1

# OPERATION OF INSTRUMENTS AND CONTROLS

## Overview of instruments and controls


Instrument panel overview . . . . . 2
Instrument cluster overview . . . . . 7
Center cluster overview . . . . . 8
Indicator symbols on the instrument panel . . . . . 9

## Instrument panel overview

▶**View A**

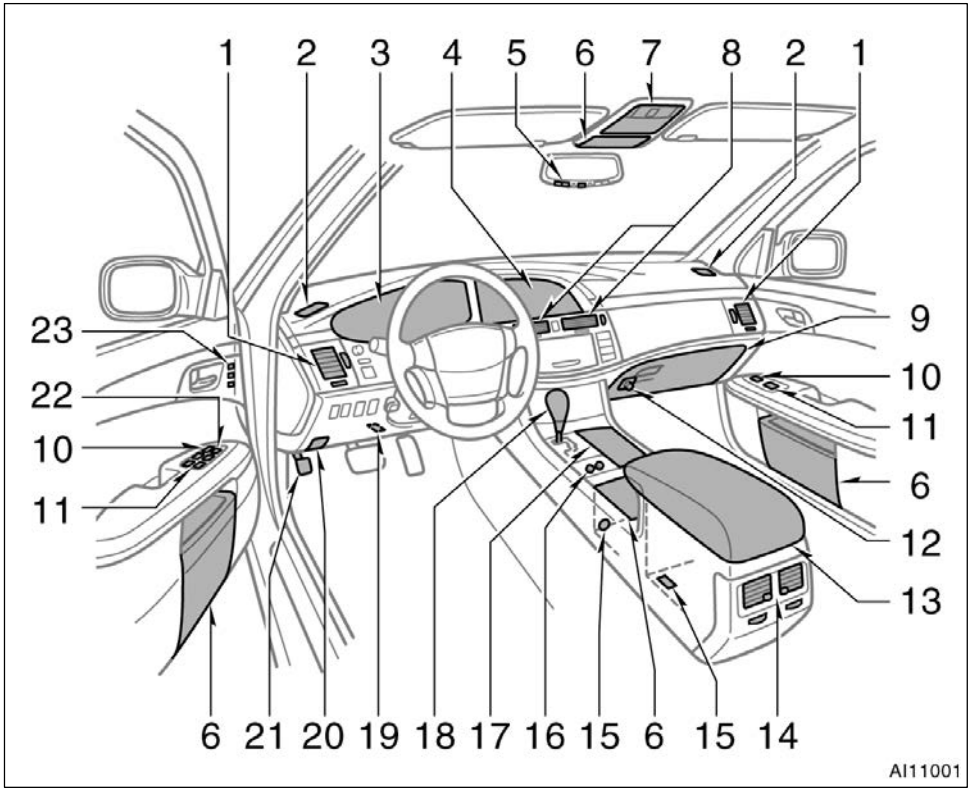


1. Side vents
2. Side defroster outlets
3. Instrument cluster
4. Center cluster
5. Garage door opener switches
6. Auxiliary boxes
7. Front personal lights, interior light and/or electric moon roof switches
8. Center vents
9. Glove box
10. Power door lock switches
11. Power window switches
12. Trunk opener main switch
13. Rear console box
14. Rear vents
15. Power outlets
16. Seat ventilator/heater switches
17. Cup holder
18. Automatic transmission selector lever
19. Tire pressure warning reset switch (On bottom of the instrument panel)
20. Hood lock release lever
21. Parking brake pedal
22. Window lock switch
23. Driving position memory switches

▶**View B (with key cylinder–type ignition switch)**

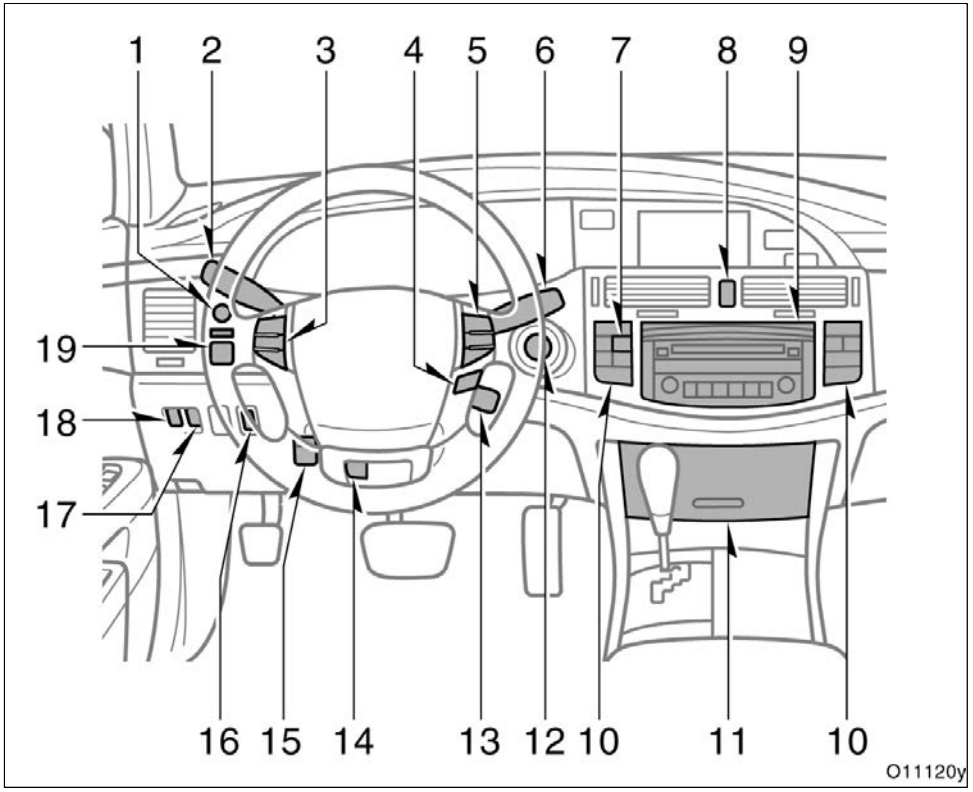


1. Instrument panel light control knob
2. Headlight, turn signal and front fog light switches
3. Audio remote control switches
4. Speech command switch (See the separate “Navigation System Owner’s Manual.”)
5. Climate remote control switches
6. Wiper and washer switches
7. Rear window and outside rear view mirror defogger switch
8. Emergency flasher switch
9. Audio system
10. Air conditioning controls
11. Cigarette lighter and ashtray, auxiliary box, cassette player or navigation system controller (For the navigation system, see the separate “Navigation System Owner’s Manual.”)
12. Ignition switch
13. Cruise control switch
14. Tilt steering lock release lever
15. Telescopic steering lock release lever

16. Glass breakage sensor
17. Trunk opener switch
18. Fuel filler door opener switch
19. Power rear view mirror control switches

▶**View B (with smart key system)**

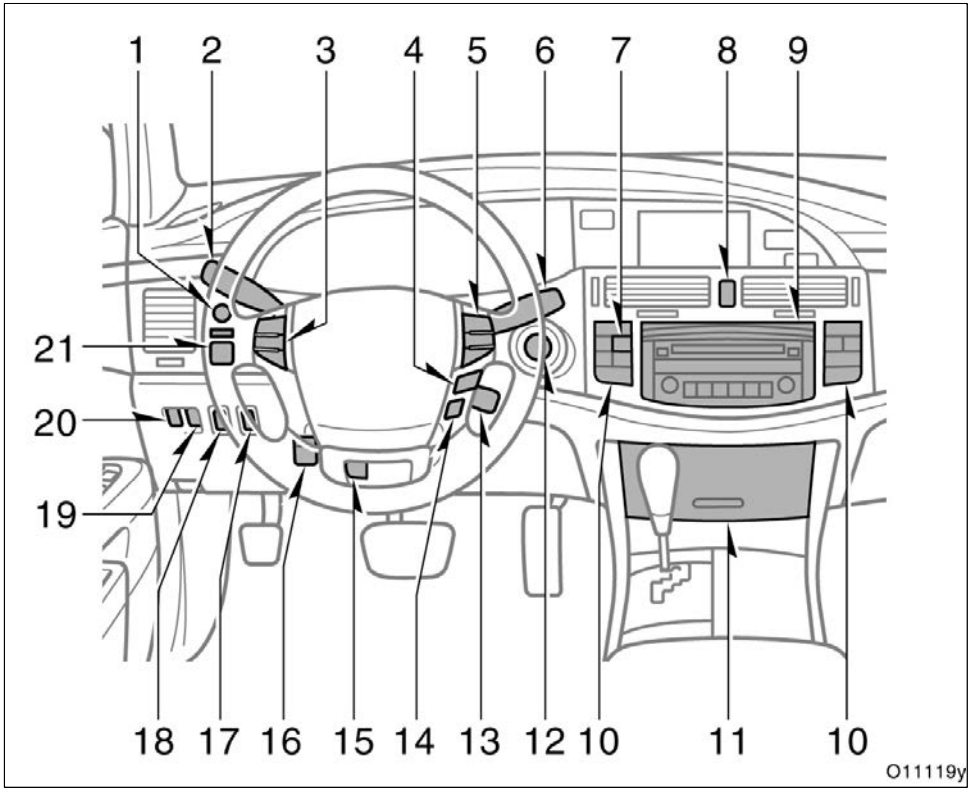


1. Instrument panel light control knob
2. Headlight, turn signal and front fog light switches
3. Audio remote control switches
4. Speech command switch (See the separate “Navigation System Owner’s Manual.”)
5. Climate remote control switches
6. Wiper and washer switches
7. Rear window and outside rear view mirror defogger switch
8. Emergency flasher switch
9. Audio system
10. Air conditioning controls
11. Cigarette lighter and ashtray, auxiliary box, cassette player or navigation system controller (For the navigation system, see the separate “Navigation System Owner’s Manual.”)
12. Ignition switch (engine switch)
13. Cruise control switch
14. Distance switch
15. Tilt steering lock release lever

16. Telescopic steering lock release lever
17. Glass breakage sensor
18. Rear electric sunshade switch
19. Trunk opener switch
20. Fuel filler door opener switch
21. Power rear view mirror control switches

## Instrument cluster overview

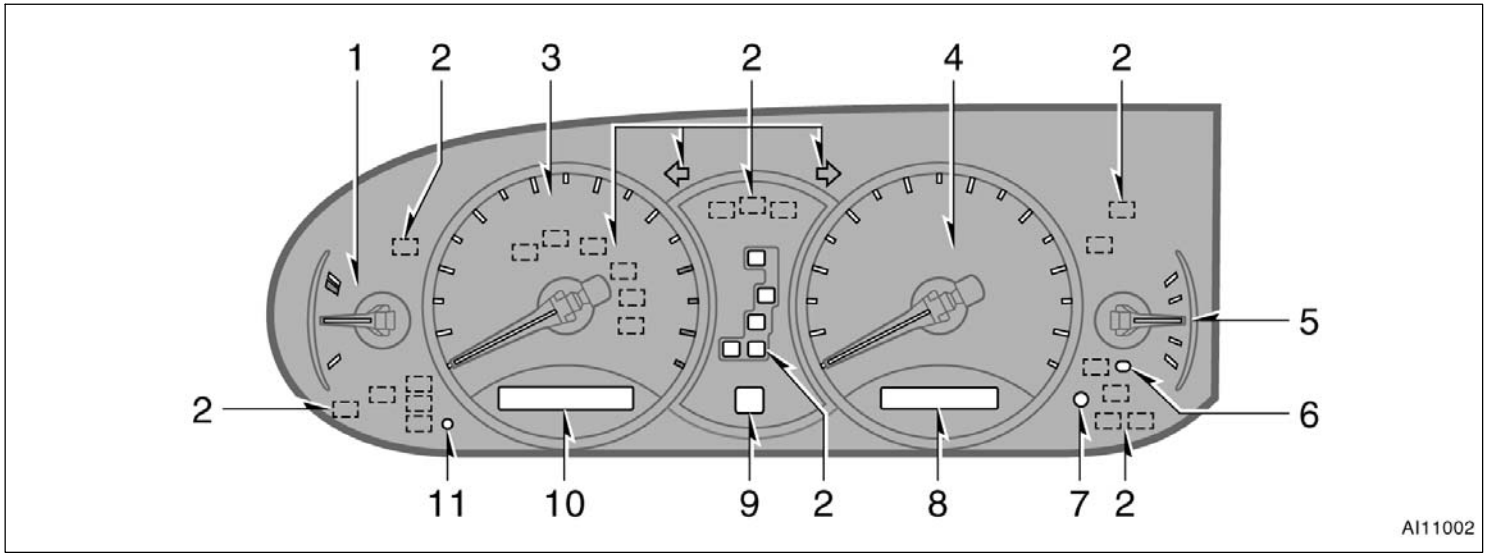


1. Engine coolant temperature gauge
2. Service reminder indicators and indicator lights
3. Tachometer
4. Speedometer
5. Fuel gauge
6. Low fuel level warning light
7. Trip meter reset knob
8. Odometer and two trip meters
9. Automatic transmission shift range position display
10. Dynamic laser cruise control display
11. Dynamic laser cruise control master warning light

## Center cluster overview

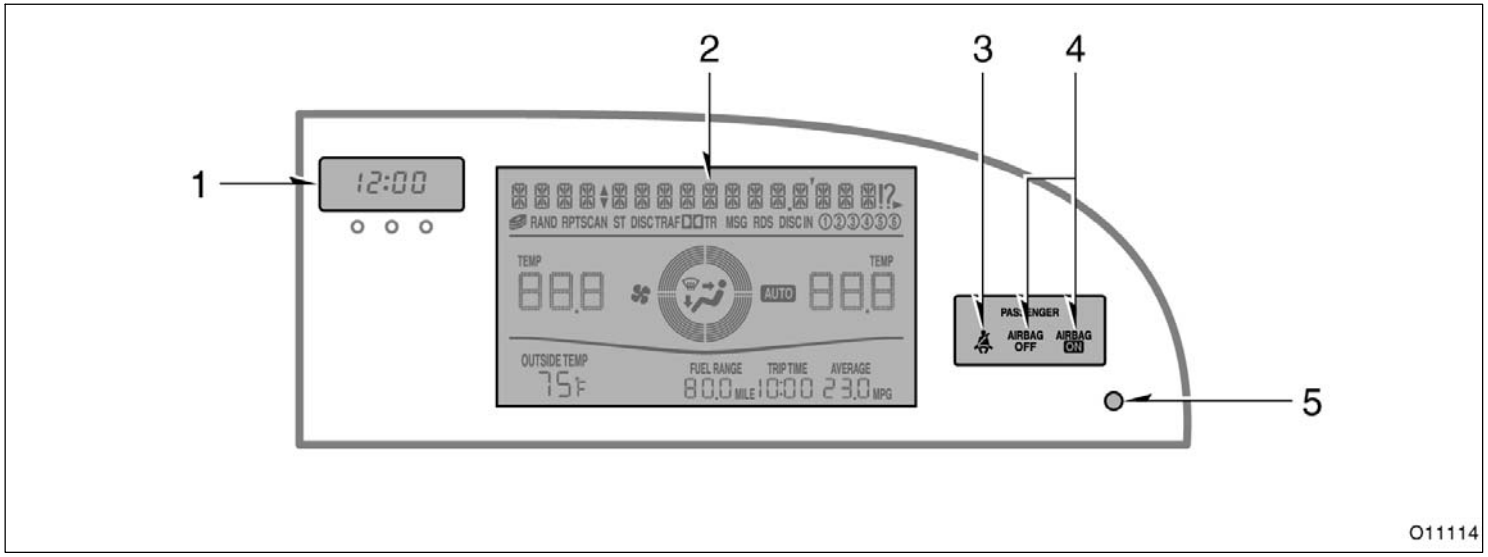


1. Clock
2. Center display*1
3. Front passenger's seat belt reminder light*2
4. "AIRBAG ON" and "AIRBAG OFF" indicator lights
5. Pattern selector knob (for center display)

*1: If your vehicle is equipped with navigation system, see the separate "Navigation System Owner's Manual".

*2: For details, see "Service reminder indicators and warning buzzers" on page 145 in Section 1–6.

## Indicator symbols on the instrument panel

| | |
|---|---|
| BRAKE or | Brake system warning light*1 |
| | Driver's seat belt reminder light*1 |
| | Charging system warning light*1 |
| | Low engine oil pressure warning light*1 |
| CHECK or | Malfunction indicator lamp*1 |
| ABS or | Anti–lock brake system warning light*1 |

| | |
|---|---|
| | Open door warning light*1 |
| | SRS warning light*1 |
| VSC | Vehicle stability control system and traction control system warning light*1 |
| | Low tire pressure warning light*1 |
| | Low windshield washer fluid level warning light*1 |
| | Automatic headlight leveling system warning light*1 |
| MAINT REQD | Engine oil replacement reminder light*1 |
| | Smart key system warning light*1 |
| | Engine immobilizer/theft deterrent system indicator light |

| | |
|---|---|
| | Headlight indicator light |
| | Tail light indicator light |
| | Headlight high beam indicator light |
| | Turn signal indicator lights |
| **P R N D S** | Automatic transmission indicator lights |
| | Slip indicator/traction control system off light |
| **CRUISE** | Cruise control indicator light*2 or dynamic laser cruise control indicator light*3 |
| **READY** | Dynamic laser cruise control ready mode indicator light |
| **NORM.** | Conventional cruise control mode indicator light |

*1: For details, see “Service reminder indicators and warning buzzers” on page 145 in Section 1–6.

*2: If this light flashes, see “Cruise control” on page 176 in Section 1–7.

*3: If this light flashes, see “Dynamic laser cruise control” on page 179 in Section 1–7.

# SECTION 1-2

## OPERATION OF INSTRUMENTS AND CONTROLS

### Keys and Doors


Keys . . . . . 12
Engine immobilizer system . . . . . 16
Wireless remote control . . . . . 18
Smart key system . . . . . 27
Side doors . . . . . 34
Power windows . . . . . 41
Trunk lid . . . . . 44
Hood . . . . . 48
Theft deterrent system . . . . . 49
Fuel tank cap . . . . . 51
Electric moon roof . . . . . 52

## Keys (with key cylinder–type ignition switch)

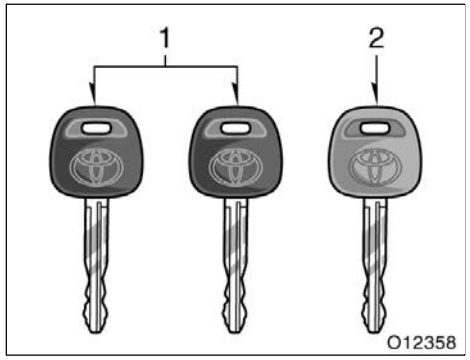


**Your vehicle is supplied with two kinds of keys.**

1. Master keys (black)—These keys work in every lock. Your Toyota dealer will need one of them to make a new key with a built–in transponder chip.
2. Sub key (gray)—This key will not work in the locks of the glove box and the door located behind the rear seat armrest.

A transponder chip for engine immobilizer system has been placed in the head of the master and sub keys. These chips are needed to enable the system to function correctly, so be careful not to lose these keys. If you make your own duplicate key, you will not be able to cancel the system or start the engine.

To protect items locked in the trunk or glove box when using valet parking, leave the sub key with the attendant.

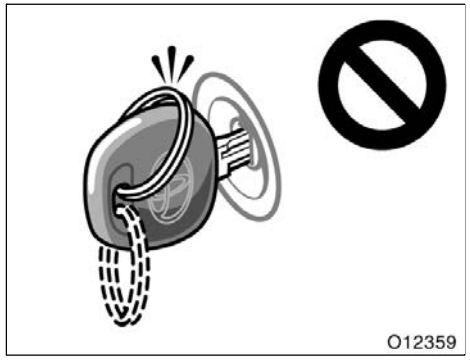


**NOTICE**

***When using a key containing a transponder chip, observe the following precautions:***

- ***When starting the engine, do not use the key with a key ring resting on the key grip and do not press the key ring against the key grip. Otherwise the engine may not start, or may stop soon after it starts.***

◆*When starting the engine, do not use the key with other transponder keys around (including keys of other vehicles) and do not press other key plates against the key grip. Otherwise the engine may not start, or may stop soon after it starts. If this happens, remove the key once and then insert it again after removing other transponder keys (including keys of other vehicles) from the ring or while gripping or covering them with your hand to start the engine.*

◆*Do not bend the key grip.*

◆*Do not cover the key grip with any material that cuts off electromagnetic waves.*

◆*Do not knock the key hard against other objects.*

◆*Do not leave the key exposed to high temperatures for a long period, such as on the dashboard and hood under direct sunlight.*

◆*Do not put the key in water or wash it in an ultrasonic washer.*

◆*Do not use the key with electromagnetic materials.*

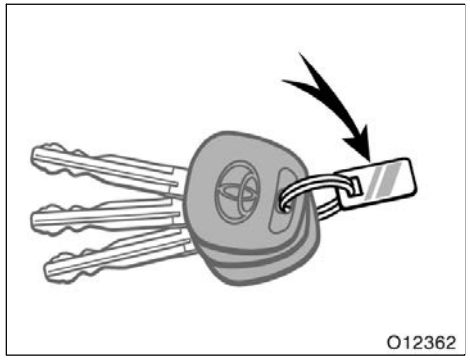


**KEY NUMBER PLATE**

**Your key number is shown on the plate. Keep the plate in a safe place such as your wallet, not in the vehicle.**

If you should lose your keys or if you need additional keys, duplicates can be made by a Toyota dealer using the key number.

We recommend writing down the key number and storing it in a safe place.

## Keys (with smart key system)

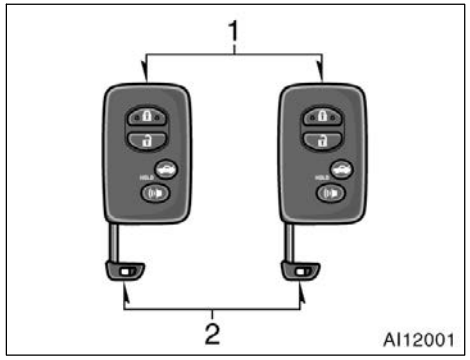


**The key consists of an electronic key and a mechanical key. The mechanical key is for emergency use. If the electronic key does not operate, you can open the driver's door using the mechanical key.**

1. Electronic keys—These keys can lock or unlock all the doors and can open the trunk by using the wireless remote control function or entry function of the smart key system.
2. Mechanical keys—These keys can lock or unlock the driver's door, the glove box and the door located behind the rear seat armrest.

**Spare keys should not be left in the cabin. In the event that a spare key is left in the cabin, the smart key system will remain actuated even after the doors have been locked. Under these circumstances, the trunk can be opened even after the driver has exited and locked the vehicle, increasing the danger of theft. (Refer to "OPENING TRUNK WITH SMART KEY SYSTEM" on page 45 in this Section.)**

To protect items locked in the trunk or the glove box when using valet parking, lock the trunk opener switch and leave the electronic key with the attendant. Keep the mechanical key with you. For details about locking the trunk opener switch, see "—Luggage security system" on page 46 in this Section.

A transponder chip for engine immobilizer system has been placed in the electronic keys. These chips are needed to enable the system to function correctly, so be careful not to lose these keys.

**⚠ CAUTION**

- **People with implanted pacemakers or cardiac defibrillators should keep away from the smart key system antennas, because the radio waves may affect the operation of such devices. For the antenna locations see "ANTENNA LOCATION" on page 29 in this Section.**
- **Users of any electrical medical device other than implanted pacemakers and implanted cardiac defibrillators should consult the manufacturer of the device for information about its operation under the influence of radio waves. Radio waves could have unexpected effects on the operation of such medical devices.**
- **If necessary, the entry function can be disabled. See "DISABLING THE SMART KEY SYSTEM" on page 33 in this Section.**

***NOTICE***

***When using a electronic key containing a transponder chip, observe the following precautions:***

- ***Do not affix any material that cuts off electromagnetic waves (such as a metal seal) on the electronic key.***
- ***Do not knock the electronic key hard against other objects.***
- ***Do not leave the electronic key exposed to high temperatures for a long period, such as on the dashboard or hood under direct sunlight.***
- ***Do not put the electronic key in water or wash it in an ultrasonic washer.***
- ***Do not keep the electronic key together with the products emitting electromagnetic waves such as a cellular phone.***

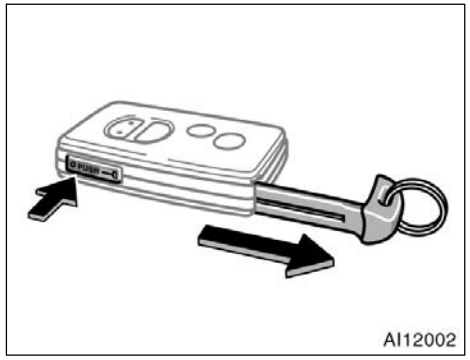


**USING A MECHANICAL KEY**

When you use the mechanical key push the release button and take out the mechanical key as shown. Be sure to put the mechanical key back when not it use.

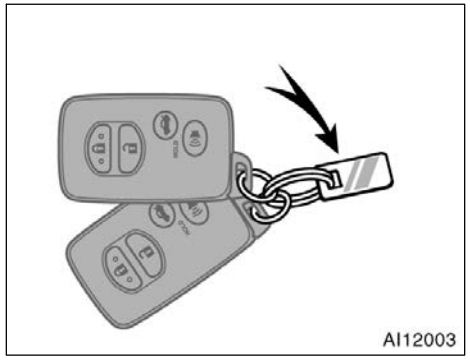


**KEY NUMBER PLATE**

**Your key number is shown on the plate. Keep the plate in a safe place such as your wallet, not in the vehicle.**

If you should lose your keys or if you need additional keys, duplicates can be made by Toyota dealer using the key number.

We recommend writing down the key number and storing it in a safe place.

## Engine immobilizer system

**The engine immobilizer system is a theft prevention system using an electronic code. The transponder chip in the key has an electronic code and transmits the code to the vehicle. Only when the electronic code in the chip corresponds to the register ID code for the vehicle, the engine immobilizer system will be canceled and the engine will start.**

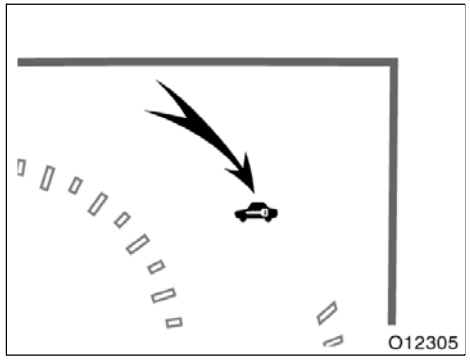


The engine immobilizer system is automatically set when:

Vehicles with key cylinder–type ignition switch—The key is removed from the ignition switch.

Vehicles with smart key system—The ignition switch is turned off.

The indicator light will start flashing to show that the system is set.

If any of the following indicator conditions occur, contact your Toyota dealer.

- The indicator light remains on.
- The indicator light does not start flashing under the following situations.

  Vehicles with key cylinder–type ignition switch—When the key is removed from the ignition switch.

  Vehicles with smart key system—When the ignition switch is turned off.
- The indicator light flashes inconsistently.

The engine immobilizer system is automatically canceled when:

Vehicles with key cylinder–type ignition switch—
You insert the key to the ignition switch.

Vehicles with smart key system—
You enter the vehicle carrying a key with smart key system and press the “ENGINE START STOP” switch (engine switch).

Even if the key battery is discharged, the engine can be started. See “Smart key system” on page 27 in this Section.

When the system is canceled, the indicator light will go off.

For your Toyota dealer to make you a new key with built–in transponder chip, your dealer will need your key number and master key (vehicles with key cylinder–type ignition switch) or electronic key (vehicles with smart key system). However, there is a limit to the number of additional keys your Toyota dealer can make for you.

**NOTICE**

***Do not modify, remove or disassemble the engine immobilizer system. If any unauthorized changes or modifications are made, proper operation of the system cannot be guaranteed.***

**For vehicles sold in U.S.A.**

**FCC ID: MOZRI–21BTY**

**FCC ID: NI4TMIMB–1**

This device complies with Part 15 of the FCC Rules. Operation is subject to the following two conditions:

(1) This device may not cause harmful interference, and (2) this device must accept any interference received, including interference that may cause undesired operation.

**⚠ CAUTION**

**Changes or modifications not expressly approved by the party responsible for compliance could void the user’s authority to operate the equipment.**

**For vehicles sold in Canada**

This device complies with RSS–210 of Industry Canada. Operation is subject to the following two conditions:

(1) This device may not cause interference, and (2) this device must accept any interference, including interference that may cause undesired operation of the device.

## Wireless remote control—

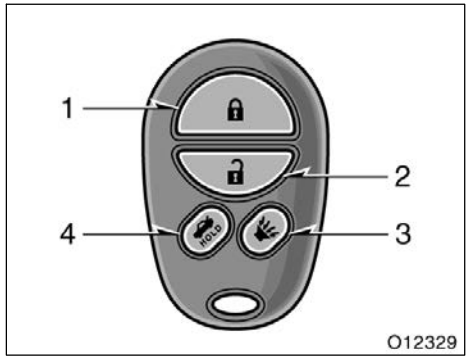


**Vehicles with key cylinder–type ignition switch**

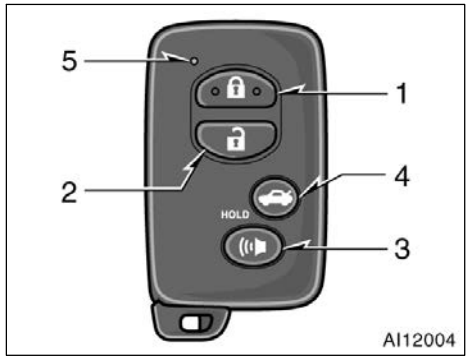


**Vehicles with smart key system**

1. Lock switch
2. Unlock switch
3. Alarm switch
4. Trunk opener switch
5. Indicator light (vehicles with smart key system only)

**The wireless remote control function is designed to lock or unlock all the doors, open the trunk lid, or activate the alarm from a distance within approximately 1 m (3 ft.) of the vehicle.**

When you operate any switch, push it slowly and securely.

Vehicles with smart key system only—When the switch is operated, the indicator light flashes once. If not, the battery may be discharged. Replace the battery at the earliest opportunity.

The wireless remote control transmitter is an electronic component. Observe the following instructions in order not to cause damage the key.

- Do not leave the transmitter in places where the temperature becomes high such as on the dashboard.
- Do not disassemble it.
- Avoid knocking it hard against other objects or dropping it.
- Avoid putting it in water.

You can use up to 4 wireless remote control transmitters (for vehicles with key cylinder–type ignition switch) or 7 wireless remote control transmitters (for vehicles with smart key system) for the same vehicle. Contact your Toyota dealer for detailed information.

If the wireless remote control transmitter does not actuate the doors, or does not operate from a normal distance, or if the indicator on the transmitter is dimmed or does not come on:

- Check for closeness to a radio transmitter such as a radio station or an airport which can interfere with normal operation of the transmitter.
- The battery may have been consumed. Check the battery in the transmitter. To replace the battery, see "—Replacing battery" on pages 24 or 25 in this Section.

If you lose your transmitter, contact your Toyota dealer as soon as possible to avoid the possibility of theft, or an accident. (See "If you lose your wireless remote control transmitter" on page 332 in Section 4.)

**For vehicles sold in U.S.A.**

This device complies with Part 15 of the FCC Rules. Operation is subject to the following two conditions:

(1) This device may not cause harmful interference, and (2) this device must accept any interference received, including interference that may cause undesired operation.

**NOTICE:**
This equipment has been tested and found to comply with the limits for a Class B digital device, pursuant to Part 15 of the FCC Rules. These limits are designed to provide reasonable protection against harmful interference in a residential installation. This equipment generates, uses and can radiate radio frequency energy and, if not installed and used in accordance with the instructions, may cause harmful interference to radio communications. However, there is no guarantee that interference will not occur in a particular installation. If this equipment does cause harmful interference to radio or television reception, which can be determined by turning the equipment off and on, the user is encouraged to try to correct the interference by one or more of the following measures:

- Reorient or relocate the receiving antenna.
- Increase the separation between the equipment and receiver.
- Connect the equipment into an outlet on a circuit different from that to which the receiver is connected.
- Consult the dealer or an experienced radio/TV technician for help.

**FCC WARNING:**
**Changes or modifications not expressly approved by the party responsible for compliance could void the user's authority to operate the equipment.**

**For vehicles sold in Canada**

Operation is subject to the following two conditions:

(1) this device may not cause interference, and (2) this device must accept any interference, including interference that may cause undesired operation of the device.

## —Locking and unlocking doors

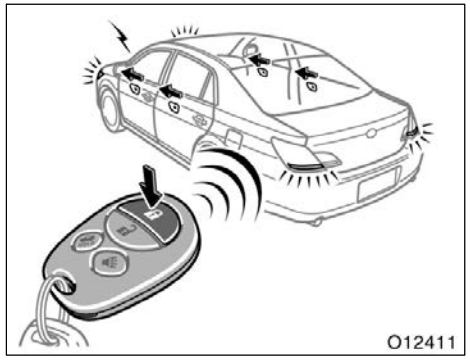


**Locking operation (vehicles with key cylinder–type ignition switch)**

**Unlocking operation (vehicles with key cylinder–type ignition switch)**

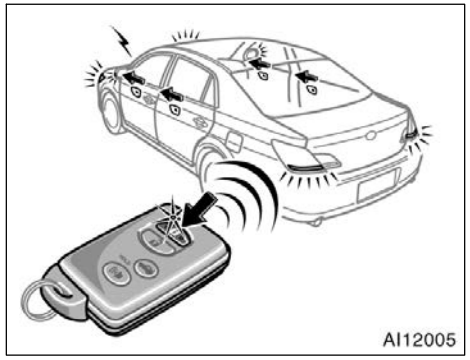


**Locking operation (vehicles with smart key system)**

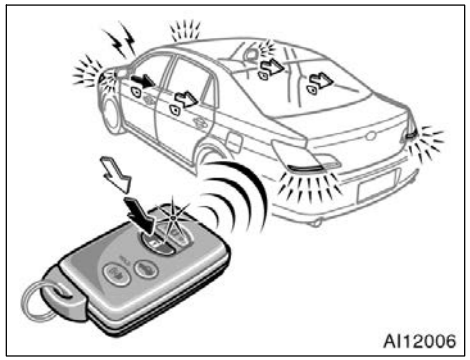


**Unlocking operation (vehicles with smart key system)**

**To lock or unlock all the doors, push the switches slowly and securely.**

To lock: Push the lock switch. All the doors are locked simultaneously. At this time one beep will sound and turn signal lights flash once.

Vehicles with smart key system—For 3 seconds after the doors have been locked, the doors cannot be re–unlocked via the smart key system.

Check to see that the doors are securely locked.

If any of the doors is not securely closed, or if the key is in the ignition switch (vehicles with key cylinder–type ignition switch) or key left in the vehicle (vehicles with smart key system), locking cannot be performed by the lock switch and a beep will sound continuously for 10 seconds.

To stop the beep, take out the key from the vehicle or push the unlock switch.

To unlock: Push the unlock switch once to unlock the driver's door alone. Pushing the switch twice within 3 seconds unlocks all the doors simultaneously. Each time the unlock switch is pushed, two beeps will sound and turn signal lights flash twice.

This double switch operation to unlock all doors can be changed to a single switch operation. For details, contact your Toyota dealer.

If the key is in the ignition (vehicles with key cylinder–type ignition switch) or the ignition switch is set to ACC or ON (vehicles with smart key system), the vehicle cannot be unlocked via the unlock switch.

When all the doors are unlocked simultaneously with a key, wireless remote control or entry function of the smart key system, the following lights come on for about 15 seconds and then fade out, even if the door is not opened.

Vehicles with key cylinder–type ignition switch—Ignition switch light, interior light, front personal lights and rear personal lights
Vehicles with smart key system—Interior light, front personal lights, rear personal lights and exterior foot lights

(For further information, see “Illuminated entry system” on page 135 in Section 1–5.)

You have 30 seconds to open a door after using the wireless remote unlock feature. If a door is not opened by then, all the doors will be automatically locked again.

If the wireless remote control is used to lock the doors near the window or door handle, there is a possibility that the door may not unlocked by entry function of smart key system. Under these circumstances, use the wireless remote control to unlock the doors.

The time before automatic door lock function can be changed. For details, contact your Toyota dealer.

If the lock or unlock switch is kept pressed in, the locking or unlocking operation is not repeated. Release the switch and then push again.

The following adjustments can be made in this system. For details, contact your Toyota dealer.

- Cancelling the wireless door locking or unlocking function
- Cancelling the flash of the turn signal lights
- Cancelling the beep sound

## —Opening trunk lid

**Vehicles with key cylinder–type ignition switch**

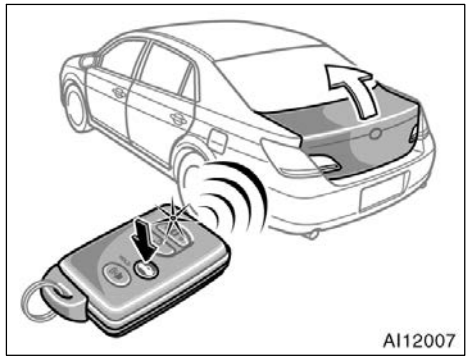


**Vehicles with smart key system**

**To open the trunk lid, push the trunk opener switch of the transmitter for 1 second. A long beep will sound.**

If the key is in the ignition (vehicles with key cylinder–type ignition switch) or the ignition switch is set at ACC or ON (vehicles with smart key system), the trunk lid cannot be opened by the trunk opener switch.

Opening of the trunk lid with the wireless remote control can be changed as follows. Contact your Toyota dealer for details.

- Trunk lid opens by pushing the trunk opener switch twice in succession.
- Trunk lid opens by pushing the trunk opener switch once regardless of how long the switch is being pressed.
- Opening of the trunk lid is disabled using the wireless remote control transmitter.

## —Activating alarm

**Vehicles with key cylinder–type ignition switch**

**Vehicles with smart key system**

**Pushing the alarm switch for 1 second blows the horn intermittently and flashes the headlights, turn signal lights, tail lights and interior light.**

Vehicles with smart key system only—When pushing the switch, the indicator light flashes.

The alarm switch is used to deter vehicle theft when you witness anyone attempting to break into or damage your vehicle.

The alarm will last for one minute. To stop the alarm midway, push the switch once again, unlock a door with the transmitter, or set the ignition switch to ON.

If the key is in the ignition (vehicles with key cylinder–type ignition switch) or the ignition switch is set at ACC or ON (vehicles with smart key system), the alarm does not work.

This alarm function can be disabled. For details, contact your Toyota dealer.

## —Replacing battery (with key cylinder–type ignition switch)

For replacement, use a CR2016 lithium battery or equivalent.

**⚠ CAUTION**

**Special care should be taken to prevent small children from swallowing the removed transmitter battery or components.**

***NOTICE***

- ***When replacing the transmitter battery, be careful not to lose the components.***
- ***Replace only with the same or equivalent type recommended by a Toyota dealer.***
- ***Dispose of used batteries according to the local laws.***

Replace the transmitter battery by following these procedures:

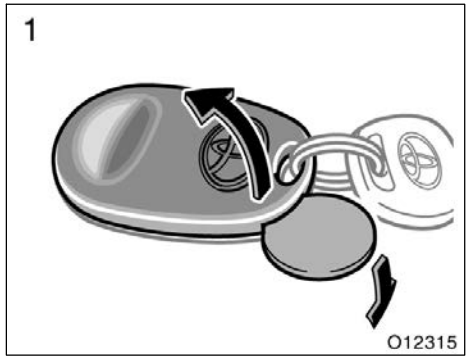


1. Using a coin or equivalent, open the transmitter case.

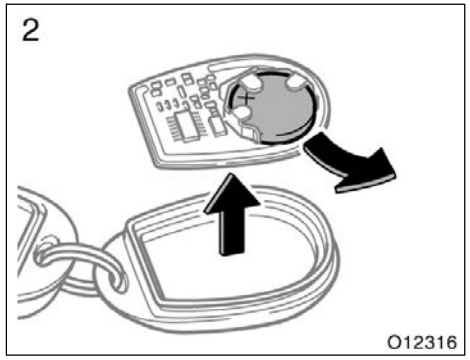


2. Remove the circuit board, then remove the discharged transmitter battery.

***NOTICE***

- ***Take care not to damage the circuit board.***
- ***Do not bend the terminals.***

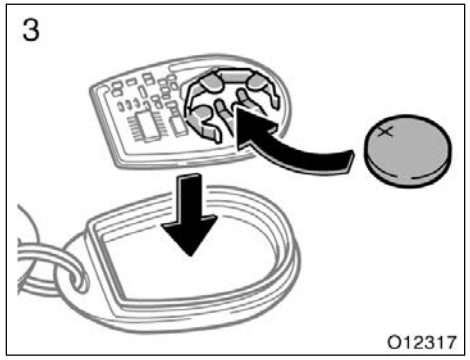


3. Put in a new transmitter battery with positive (+) side up. Install the circuit board into the transmitter case.

Close the transmitter case securely.

**NOTICE**

- ***Make sure the positive side and negative side of the transmitter battery are faced correctly.***
- ***Do not replace the battery with wet hands. Water may cause unexpected rust.***
- ***Do not touch or move any components inside the transmitter, or it may interfere with proper operation.***
- ***Be careful not to bend the electrode when inserting the transmitter battery and that dust or oils do not adhere to the transmitter case.***
- ***Close the transmitter case securely.***

After replacing the battery, check that the transmitter operates properly. If the transmitter still does not operate properly, contact your Toyota dealer.

## —Replacing battery (with smart key system)

The transmitter can easily be damaged when replacing the battery. We recommend having the battery replaced by your Toyota dealer. If you have to do it yourself, use a CR1632 lithium battery or equivalent and a flathead screwdriver.

**⚠ CAUTION**

**Special care should be taken to prevent small children from swallowing the removed transmitter battery or components.**

**NOTICE**

- ***Be careful not to touch the circuit, as this may generate static electricity that can damage the transmitter.***
- ***When replacing the transmitter battery, be careful not to lose the components.***
- ***Replace only with the same or equivalent type recommended by a Toyota dealer.***
- ***Dispose of used batteries according to the local laws.***

Replace the transmitter battery by following these procedures:

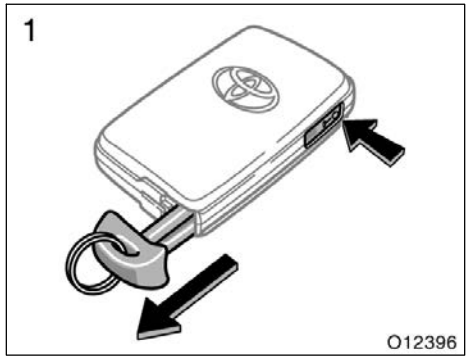


1. Push the release button and take out the mechanical key.

2. Using a flathead screwdriver or equivalent, open the transmitter case.

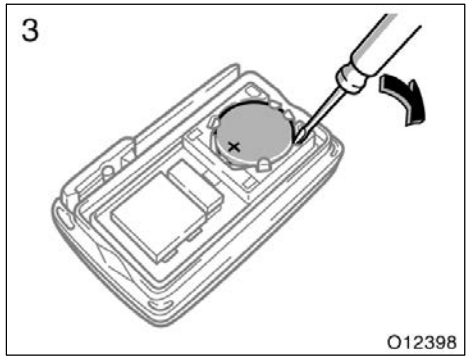


3. Remove the discharged transmitter battery by flathead screwdriver or equivalent. Insert the guide groove and lift as shown in the above illustration.

| ***NOTICE*** |
| --- |
| ***Do not modify the battery case. It may cause a trouble.*** |

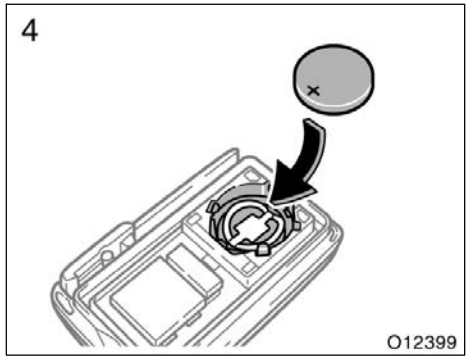


4. Put in a new battery with the positive (+) side up. Install the cover and insert the mechanical key into the transmitter.

Close the transmitter case securely.

**NOTICE**

- ***Make sure the positive side and negative side of the battery are faced correctly.***
- ***Do not replace the battery with wet hands. Water may cause unexpected rust.***
- ***Do not touch or move any components inside the transmitter, or it may interfere with proper operation.***
- ***Be careful not to bend the electrode when inserting the transmitter battery and that dust or oils do not adhere to the case.***
- ***Close the transmitter case securely.***

After replacing the battery, check that the transmitter operates properly. If the transmitter still does not operate properly, contact your Toyota dealer.

## Smart key system

**The smart key system consists mainly of the following functions.**

- Engine immobilizer function (For details, see “Engine immobilizer system” on page 16 in this Section.)
- Wireless remote control function (For details, see “Wireless remote control” on page 18 in this Section.)
- Push button start function (For details, see “How to start the engine” on page 296 in Section 3.)
- Entry function and start function (See “ENTRY FUNCTION AND START FUNCTION” described below.)
- Steering lock function (See “STEERING LOCK FUNCTION” described below.)

**⚠ CAUTION**

- **People with implanted pacemakers or cardiac defibrillators should keep away from the smart key system antennas, because the radio waves may affect the operation of such devices. For the antenna locations see "ANTENNA LOCATION" on page 29 in this Section.**
- **Users of any electrical medical device other than implanted pacemakers and implanted cardiac defibrillators should consult the manufacturer of the device for information about its operation under the influence of radio waves. Radio waves could have unexpected effects on the operation of such medical devices.**
- **If necessary, the entry function can be disabled. See "DISABLING THE SMART KEY SYSTEM" on page 33 in this Section.**

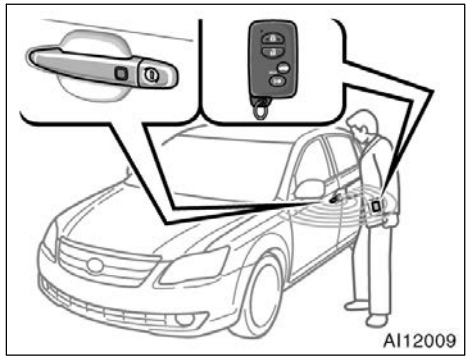


**Entry function**

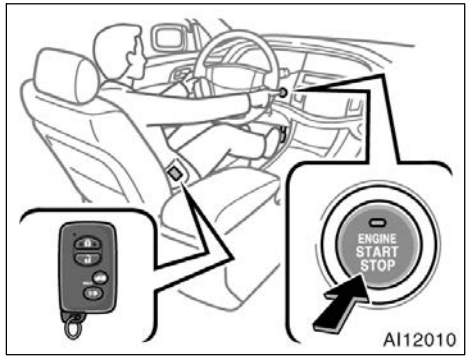


**Start function**

**ENTRY FUNCTION AND START FUNCTION**

**By carrying the key, you can lock and unlock the doors and start the engine.**

**Entry function—**You can lock and unlock the doors and open the trunk without inserting the key in the keyhole. For further information, see "Side doors" on page 34 and "Trunk lid" on page 44 in this Section.

**Start function—**You can shift the power supply mode and start the engine when the electronic key is in the vehicle. For further information, see "Ignition switch" on page 159 in Section 1–7 and "How to start the engine "on page 296 in Section 3.

**STEERING LOCK FUNCTION**

When the driver's door is opened after turning off the engine, the steering wheel will lock.

The steering lock is automatically unlocked when the "ENGINE START STOP" switch (engine switch) is pressed. If the indicator light on the "ENGINE START STOP" switch flashes green, this indicates that the steering wheel remains locked. If the amber indicator light flashes, this indicates that the steering lock is malfunctioning. For details, see "How to start the engine" on page 296 and "Driving and parking using smart key system" on page 300 in Section 3.

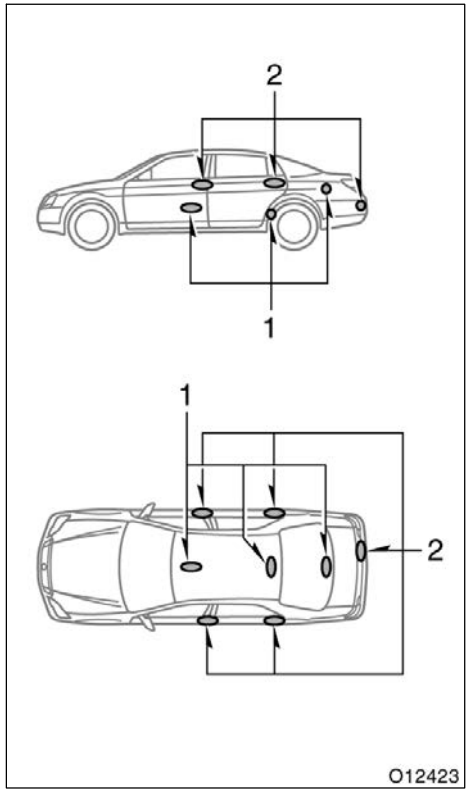


**ANTENNA LOCATION**

1. Antenna inside cabin and trunk
2. Antenna outside cabin and trunk

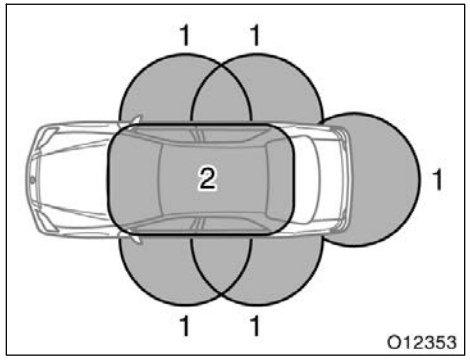


**ACTUATION AREA**

**The entry function and start function are available to use when a registered key is in the actuation area.**

1. **Entry function actuation area—**About 1 m (3 ft.) from each outside door handle and trunk opener switch.

   If the key is close to a door handle, a window, the center of the rear bumper, on the ground or above the roof, the entry function may not operate properly.

2. **Start function actuation area—**Inside of the cabin.

   The start function may not be activated if the key is on the instrument panel, on the package tray, in the glove box or on the floor, etc.

In the following cases, the smart key system may not operate properly.

- When facilities issuing strong electromagnetic waves such as TV towers, electric power stations, broad casting stations are nearby.
- In places where automated payment facilities are installed (such as gas stations).
- When you are carrying an electronic key together with a mobile communications system such as a two–way radio or cellular phone.
- When the electronic key is in contact with or covered by a metallic object.
- When another person is operating a wireless remote control function on another vehicle near your vehicle.
- When the battery is discharged. To replace the battery, see "—Replacing battery" on page 25 in this Section.
- When the electronic key is near a high–voltage or noise–emitting device.
- When you are carrying an electronic key together with a key for another smart key system equipped vehicle or another instrument emitting radio waves.
- Depending on the position of the key or vehicle body shape the key may not work well even within the actuation area.
- When the key surface is covered by a sticker, etc. that may cut off electromagnetic wave.

**If the smart key system does not operate properly and you cannot enter, you can lock and unlock all the doors by using mechanical key attached to the master key or wireless remote control function.**

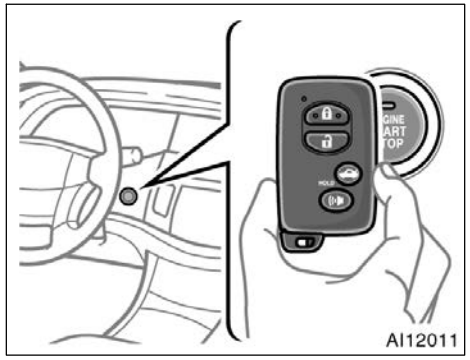


**STARTING THE ENGINE WHEN THE ELECTRONIC KEY BATTERY IS DISCHARGED**

**If the key indicator does not flash and the engine cannot be started by using the start function, the battery may be discharged. Replace the key battery as soon as possible. (See "—Replacing battery" on page 25 in this Section.)**

However the engine can be started in the following procedures.

1. While the brake pedal is depressed, touch the Toyota logo side of the electronic key to the "ENGINE START STOP" switch.
2. Start the engine within 5 seconds after the green indicator light on the "ENGINE START STOP" switch comes on and a buzzer sounds.

**BATTERY POWER SAVING**

Both the vehicle and key transmitters are always sending signals to each other. To prevent the batteries from being discharged, the smart key system is automatically deactivated in the following conditions:

- If the electronic key is left outside of the vehicle and within the effective range of the entry function actuation area for more than 10 minutes.
- If the door lock or unlock operation is not performed more than 2 weeks.

The key and the vehicle are communicating even while the vehicle is not being driven. Do not leave the key near the vehicle (within 2 m [7 ft.]).

The vehicle battery may drain if the vehicle is not used for a long period of time. To prevent battery drain, disconnect the battery negative (–) terminal or disable the smart key system. (For details about disable the smart key system, see "DISABLING THE SMART KEY SYSTEM" on page 33 in this Section.)

**If the battery is disconnected,** the power window and moon roof may not operate automatically and the jam protection function will not function correctly after you reconnect. In this case, you should normalize each system. To normalize them, see "Power windows" on page 41 and "Electric moon roof" on page 52 in Section 1–2.

**To reactivate the smart key system, perform any of the following:**

(a) Press the lock button on the outside front door handle while carrying the electronic key.

(b) Perform a wireless remote control operation.

(c) Insert and turn the mechanical key in the keyhole of the driver's door.

If the electronic key receives strong electromagnetic waves over a period of time, the battery can be drastically run down. You should always keep the at least 1 m (3 ft.) away from the electronic key following electrical appliances.

- TV
- Personal computer
- Cellular phone
- Cordless phone recharger unit
- Electric light stand
- Fluorescent desk light

**For vehicles sold in U.S.A.**

**FCC ID: NI4TMLF−1**

This device complies with Part 15 of the FCC Rules. Operation is subject to the following two conditions:

(1) This device may not cause harmful interference, and (2) this device must accept any interference received, including interference that may cause undesired operation.

**CAUTION**

**Changes or modifications not expressly approved by the party responsible for compliance could void the user's authority to operate the equipment.**

**For vehicles sold in Canada**

This device complies with RSS−210 of Industry Canada. Operation is subject to the following two conditions:

(1) This device may not cause interference, and (2) this device must accept any interference, including interference that may cause undesired operation of the device.

**For vehicles sold in U.S.A.**

This device complies with Part 15 of the FCC Rules. Operation is subject to the following two conditions:

(1) This device may not cause harmful interference, and (2) this device must accept any interference received, including interference that may cause undesired operation.

**NOTICE:**
This equipment has been tested and found to comply with the limits for a Class B digital device, pursuant to Part 15 of the FCC Rules. These limits are designed to provide reasonable protection against harmful interference in a residential installation. This equipment generates, uses and can radiate radio frequency energy and, if not installed and used in accordance with the instructions, may cause harmful interference to radio communications. However, there is no guarantee that interference will not occur in a particular installation. If this equipment does cause harmful interference to radio or television reception, which can be determined by turning the equipment off and on, the user is encouraged to try to correct the interference by one or more of the following measures:

- Reorient or relocate the receiving antenna.
- Increase the separation between the equipment and receiver.
- Connect the equipment into an outlet on a circuit different from that to which the receiver is connected.
- Consult the dealer or an experienced radio/TV technician for help.

**FCC WARNING:**
**Changes or modifications not expressly approved by the party responsible for compliance could void the user's authority to operate the equipment.**

**For vehicles sold in Canada**

Operation is subject to the following two conditions:

(1) this device may not cause interference, and (2) this device must accept any interference, including interference that may cause undesired operation of the device.

**DISABLING THE SMART KEY SYSTEM**

The following functions can be disabled:

- A function that allows you to lock/unlock the doors and open the trunk by simply carrying a key
- A function that causes the vehicle to beep if keys are forgotten inside the vehicle or trunk and a door is closed
- A function that recalls the position of the driver's seat and outside rear view mirrors
- A function that shifts the power supply mode and starts the engine when the electronic key is in the vehicle.
- Warning lights and buzzers

For details, contact your Toyota dealer.

**If the smart key system does not operate properly because of a system malfunction, consult your Toyota dealer. Make sure to bring all of the keys. They may be necessary to repair the system.**

## Side doors—
## —Locking and unlocking with key

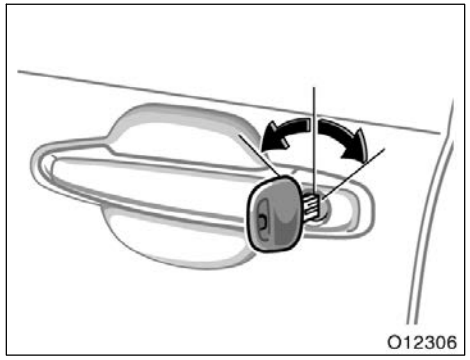


**Vehicles with key cylinder–type ignition switch**

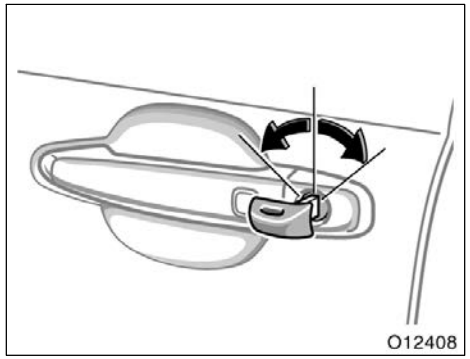


**Vehicles with smart key system**

**Insert the key into the keyhole and turn it.**

To lock: Turn the key forward.
To unlock: Turn the key backward.

All the doors lock and unlock simultaneously with the driver's door. In the driver's door lock, turning the key once will unlock the driver's door and twice in succession will unlock all the doors simultaneously.

This double key turning operation to unlock all the doors can be changed to a single key turning operation. For details, contact your Toyota dealer.

Vehicles with smart key system—For 3 seconds after the doors have been locked, the doors cannot be re–unlocked via the smart key system.

When you unlock the doors, the illuminated entry system will be activated. (For further information, see "Illuminated entry system" on page 135 in Section 1–5.)

## —Locking and unlocking with smart key system

When you carry the registered key with smart key system into the actuation area, you can lock and unlock the side doors without using the key. For further information of actuation area, see "Smart key system" on page 27 in this Section.

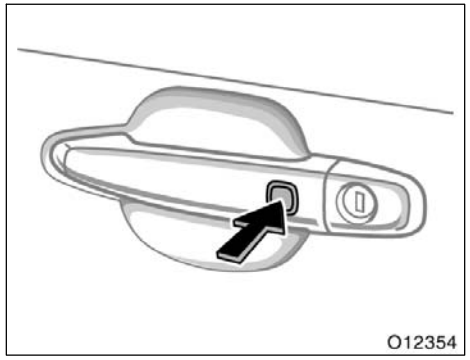


**Locking operation**

**Push the lock button on the outside door handle slowly and firmly. All the doors lock simultaneously. At this time one beep will be heard and turn signal lights flash once.**

In the following cases, you cannot be locked by pushing the lock button and a beep will sound as an indicator.

- When any of the doors is not securely closed. A beep will sound continuously for 10 seconds.
- When the lock switch is pressed while opening or closing the door. A beep will sound continuously for 10 seconds.
- When the engine is not turned off. A beep will sound continuously for 2 seconds.
- When the key is left in the vehicle. A beep will sound continuously for 2 seconds.
- When attempting to lock the doors with the key near a window or a door handle. A beep will sound continuously for 2 seconds.

The beep may not sound if the key is on the instrument panel, on the package tray, in the glove box or on the floor, etc.

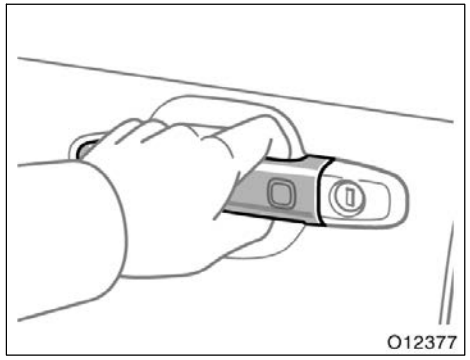


**Unlocking operation**

**Grasp the outside door handle (sensors are located on the underside of the door handles). Only the driver's door unlocks when the driver's door handle is grasped. All the doors unlock when any door handle other than the driver's door handle is grasped. At this time two beeps will be heard and the turn signal lights flash twice.**

The doors may not unlock if the handle is grasped too quickly. Be sure to confirm that the doors are unlocked before pulling the door handle. If the doors do not open when the handle is pulled, return the handle to its original position.

Wearing gloves may slow response time. For 3 seconds after the doors have been locked, the doors cannot be re–unlocked via the smart key system.

When you enter the entry function actuation area, the interior and exterior lights come on for about 15 seconds. After the lights come on, all the side doors can be unlocked by grasping the outside door handle.

You have 30 seconds to open a door after using the unlocking function. If a door is not opened by then, all the doors will be automatically locked again.

The doors may unlock if the key is within the entry function actuation area and a large amount of water splashes on the door handle (for example, in the rain or in a car wash).

When you unlock the doors, the illuminated entry system will be activated. (For further information, see “Illuminated entry system” on page 135 in Section 1–5.)

**SELECTING DOORS TO BE UNLOCKED WITH ENTRY FUNCTION**

**The unlock operation has 2 modes. To change the mode, within 1 m (3 ft.) of the vehicle press the lock switch and the alarm, the trunk opener or unlock switch simultaneously for 5 seconds.**

In order to change unlock modes, the ignition switch must be turned off.

Repeating this procedure allows you to toggle between the following 2 modes:

1. Driver’s door only (default)—In this mode, only the driver’s door unlocks when the driver’s door handle is grasped. All the doors unlock when any door handle other than the driver’s door handle is grasped. When the setting is complete, you will hear two beeps.
2. All doors—In this mode, all doors (except the trunk) unlocks when any of the door handles is grasped. When the setting is complete, you will hear two beeps.

After the mode change operation is complete, wait 5 seconds before repeating the operation.

## —Locking and unlocking with inside lock knob

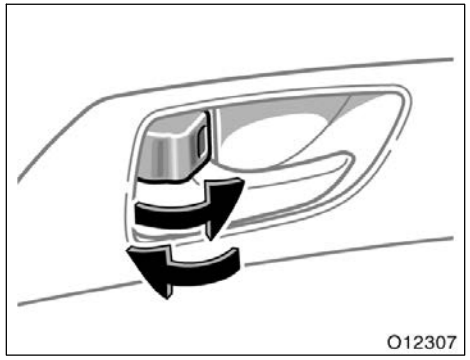


**Move the lock knob.**

To lock: Push the knob forward.
To unlock: Pull the knob backward.

The front doors can be opened by pulling the inside handle even if the lock knobs are in the locked position.

**⚠ CAUTION**

**Do not pull the inside handle of the doors while driving. The doors will open and an accident may occur. Toyota strongly recommends that all children be placed in the rear seat of the vehicle.**

Closing the door with the lock knob in the lock position will also lock the door. Be careful not to lock your keys in the vehicle.

Doors cannot be locked when either front door is open and the key is in the ignition (vehicles with key cylinder–type ignition switch) or key is left in the vehicle (vehicles with smart key system).

## —Locking and unlocking with power door lock switch

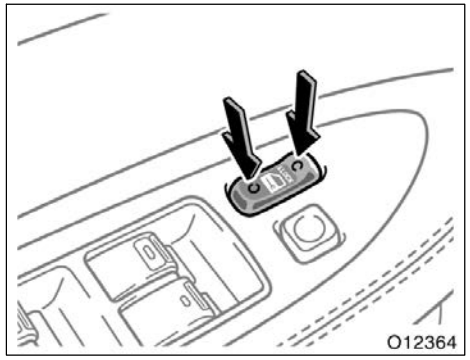


**Driver's side**

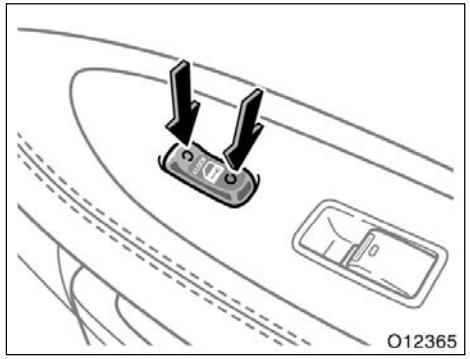


**Passenger's side**

**Push the switch.**

To lock: Push the switch down on the front side.
To unlock: Push the switch down on the rear side.

All the doors lock or unlock simultaneously.

When the front doors are locked from the outside or locked with the wireless remote control transmitter, the power door lock switch will not work until either front door is unlocked with the key, lock knob, or wireless remote control transmitter.

If the vehicle is subjected to a severe frontal, rear or side impact with the ignition switch set at ON, all doors will unlock automatically after a few seconds.

## —Automatic door locking and unlocking functions

**AUTOMATIC DOOR LOCKING**

**You can select the following functions:**

- **Locking linked with the shift position**

  All doors are automatically locked when the selector lever is moved out of “P” position.

- **Locking linked with vehicle speed**

  All doors are automatically locked when the vehicle speed goes above about 20 km/h (12 mph).

**You can set or cancel the automatic door locking functions:**

Be sure to apply the parking brake when performing the following operations.

**To select the locking linked with the shift position:**

1. Close all doors and turn the ignition switch to ON.
2. Shift the selector lever to the “P” position.
3. Within 10 seconds of turning the ignition switch to ON, press and hold the driver’s side power door lock switch in the lock position for 5 seconds and then release.

   The doors will be locked and unlocked to indicate that the function is set.

To cancel the function, do the above operation again.

**To select the locking linked with the vehicle speed:**

1. Close all doors and turn the ignition switch to ON.
2. Shift the selector lever from “P” to the “N” position.
3. Within 10 seconds of turning the ignition switch to ON, press and hold the driver’s side power door lock switch in the lock position for 5 seconds and then release.

   The doors will be locked and unlocked to indicate that the function is set.

To cancel the function, do the above operation again.

**AUTOMATIC DOOR UNLOCKING**

**You can select the following functions:**

- **Unlocking linked with the shift position**

  All doors are automatically unlocked when the selector lever is moved to “P” position.

- **Unlocking linked with the ignition switch**

  All doors are automatically unlocked when the driver’s door is opened within 10 seconds after the ignition switch is set from ON to ACC or OFF.

**You can set or cancel the automatic door unlocking functions:**

Be sure to apply the parking brake when performing the following operations.

**To select the unlocking linked with the shift position:**

1. Close all doors and turn the ignition switch to ON.
2. Shift the selector lever to the “P” position.
3. Within 10 seconds of turning the ignition switch to ON, press and hold the driver’s side power door lock switch in the unlock position for 5 seconds and then release.

   The doors will be locked and unlocked to indicate that the function is set.

To cancel the function, do the above operation again.

**To select the unlocking linked with the ignition switch:**

1. Close all doors and turn the ignition switch to ON.
2. Shift the selector lever from “P” to the “N” position.
3. Within 10 seconds of turning the ignition switch to ON, press and hold the driver’s side power door lock switch in the unlock position for 5 seconds and then release.

   The doors will be locked and unlocked to indicate that the function is set.

To cancel the function, do the above operation again.

## —Rear door child–protectors

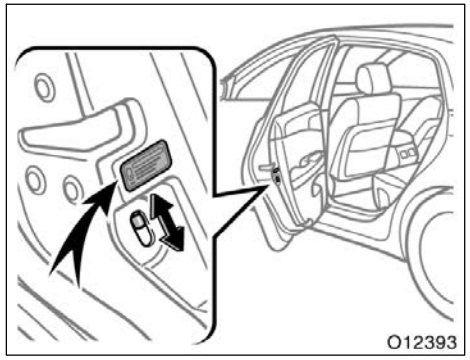


**Move the lock knob to the “LOCK” position as shown on the label.**

When the child–protector is locked, you cannot open the rear door by the inside door handle. We recommend using this feature whenever small children are in the vehicle.

**⚠ CAUTION**

**Before driving, be sure that the doors are closed and locked, especially when small children are in the vehicle. Along with the proper use of seat belts, locking the doors helps prevent the driver and passengers from being thrown out from the vehicle in an accident. It also helps prevent the doors from being opened unintentionally.**

## Power windows

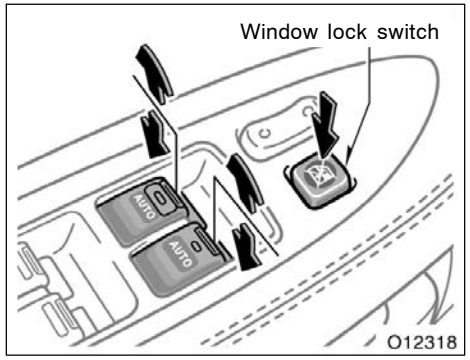


**Driver's door switches**

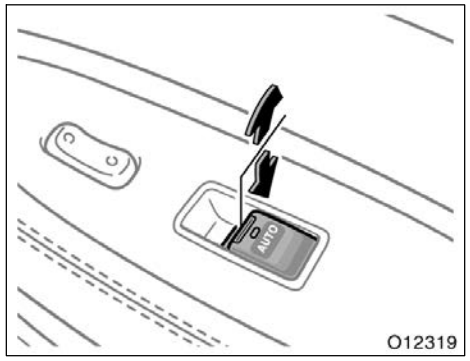


**Front passenger's door switch**

**The windows can be operated with the switch on each door.**

The power windows work when the ignition switch is set at ON.

**Key off operation:** If both front doors are closed, it works for 43 seconds even after the ignition switch is turned off. It stops working when either front door is opened.

**OPERATING THE FRONT WINDOWS**

**Use the switches on the driver's door and front passenger's door.**

**Normal operation:** The window moves as long as you hold the switch.

To open: Lightly push down the switch.
To close: Lightly pull up the switch.

If you push in the window lock switch on the driver's door, the passenger's window cannot be operated.

The indicator lights on the switch tell you which of the switches can be operated.

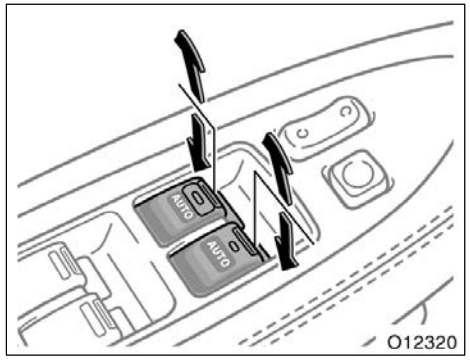


**Driver's door switches**

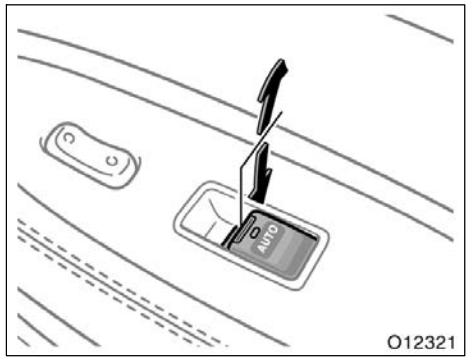


**Front passenger's door switch**

**Automatic operation:** Push the switch completely down or pull it completely up, and then release it. The window will fully open or close. To stop the window partway, lightly move the switch in the opposite direction and then release it.

If you push in the window lock switch on the driver's door, the front passenger's window cannot be operated.

The indicator lights on the switch tell you which of the switches can be operated.

**Jam protection function:** If something gets caught between the window and window frame, during automatic closing operation or key off closing operation, the window stops and opens half way.

If the window receives a strong impact, this function may work even if nothing is caught.

**If the power window does not operate automatically or the jam protection function does not operate correctly, you should normalize the power window.**

To normalize the power window:

1. Push down the power window switches of each front door and lower the windows halfway.
2. Pull up the switches until the windows close and hold the switches for 1 second.

Make sure that the windows open and close automatically. If the power windows cannot be operated properly, have it checked by your Toyota dealer.

**⚠ CAUTION**

- **Never try jamming any part of your body to activate the jam protection function intentionally, as it could result in a death or serious injury.**
- **The jam protection function may not work if something gets caught just before the window is fully closed.**

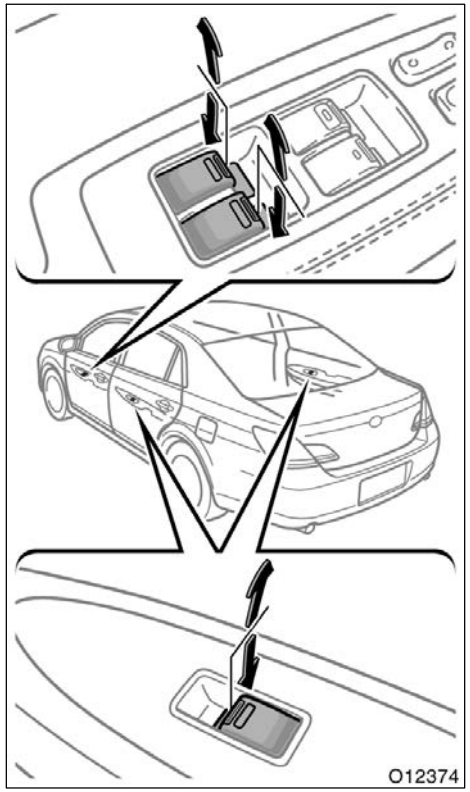


## OPERATING THE REAR WINDOWS

**Use the switch on each rear doors or the switches on the driver's door that control rear passengers' windows.**

The window moves as long as you hold the switch.

To open: Push down the switch.
To close: Pull up the switch.

If you push in the window lock switch on the driver's door, the passengers' windows cannot be operated.

**⚠ CAUTION**

**To avoid death or serious personal injury, you must do the following.**

- **Before you close the power windows, always make sure there is nobody around the power windows. You must also make sure the heads, hands and other parts of the bodies of all occupants are kept completely inside the vehicle. If someone's neck, head or hands get caught in a closing window, it could result in death or serious injury. When anyone closes the power windows, make sure he or she operates the windows safely.**
- **When small children are in the vehicle, never let them use the power window switches without supervision. Use the window lock switch to prevent them from making unexpected use of the switches.**
- **Be sure to carry the key when you leave your vehicle.**

- **Never leave anyone (particularly a small child) alone in your vehicle, with the key left in the vehicle. Otherwise, he/she could use the power window switches and get trapped in a window. Unattended person (particularly a small child) can be involved in a serious accident.**

## Trunk lid—

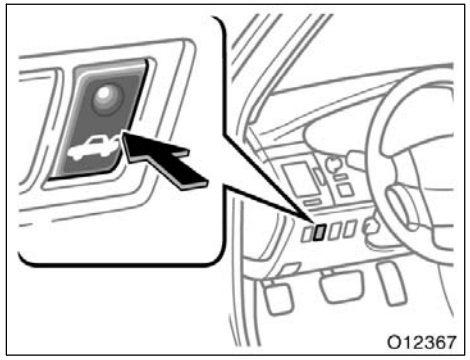


**To open the trunk lid from the driver's seat, push the trunk opener switch.**

See "Cargo and luggage" on page 290 in Section 2 for precautions when loading luggage.

To close the trunk lid, lower it and press down on it. After closing the trunk lid, try pulling it up to make sure it is securely closed.

To deactivate this lock release switch from opening the trunk lid, see "—Trunk opener main switch" described below.

The trunk lid can be opened with the wireless remote control transmitter, see "—Opening trunk lid" on page 22 in this Section.

**⚠ CAUTION**

**Keep the trunk lid closed while driving. This not only keeps the luggage from being thrown out but also prevents exhaust gases from entering the vehicle.**

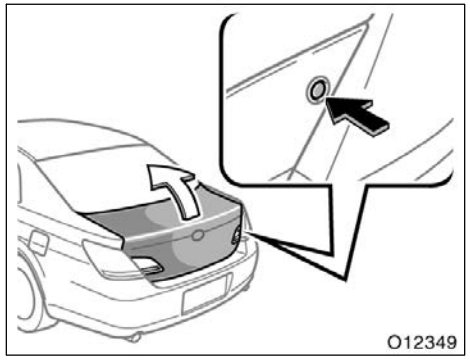


**OPENING TRUNK WITH SMART KEY SYSTEM**

When you carry the registered key into the actuation area, the trunk can be opened. For further information of actuation area, see “Smart key system” on page 27 in this Section.

A warning buzzer may sound when:

- The key is brought into the cabin after the trunk is opened, and the trunk is then closed.
- The key is near the trunk when the trunk is closed.

The buzzer may sound even when the key is not in the trunk. This does not indicate a problem. However, under these circumstances, the trunk cannot be opened using the smart key system. Open the trunk using other methods.

If you left the key in the trunk and close it when all side doors are locked, a beep will sound continuously for 2 seconds. You can open the trunk pushing the trunk opener switch without carrying another key. However, in some instances, the beep may not sound when the trunk is closed depending on the location of the key in the trunk. In addition, when the doors are open or unlocked, the beep may not sound when the trunk is closed. When closing the trunk, make sure that the key is not left in it.

## —Trunk opener main switch

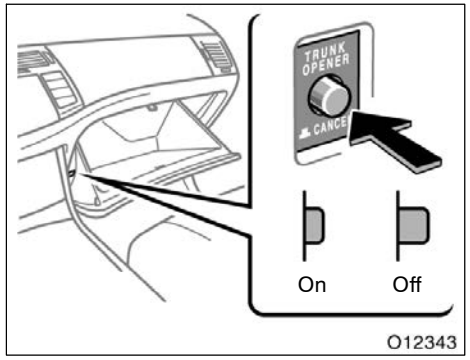


**If you do not want to activate the trunk lid opener system, turn off the trunk opener main switch in the glove box. To turn it on, push in the trunk opener main switch again.**

### —In case the trunk opener is not actuated

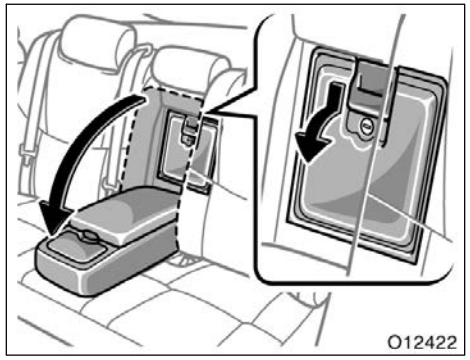


1. **Pull down the rear armrest and open the door behind it.**

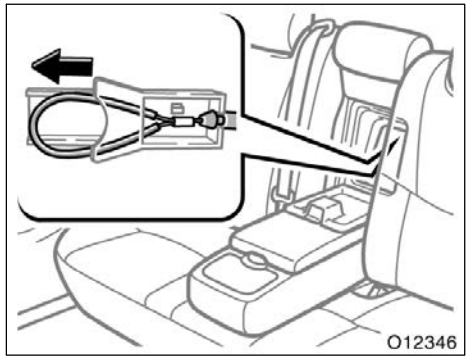


2. **Pull the loop of wire to unlock the trunk lid.**

This is used in case the trunk lid cannot be unlocked due to a discharged battery or other trouble.

### —Luggage security system

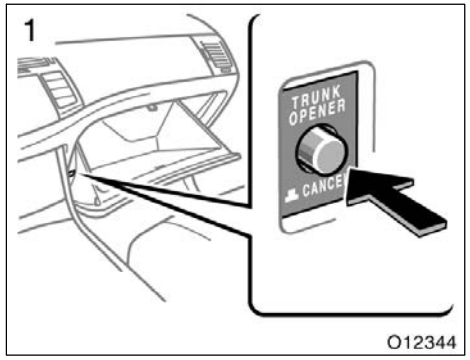


**This system helps protect things locked in the trunk by safeguarding the trunk opener main switch from unwanted access.**

1. **To cancel the trunk opener switch, turn off the trunk opener main switch in the glove box.**

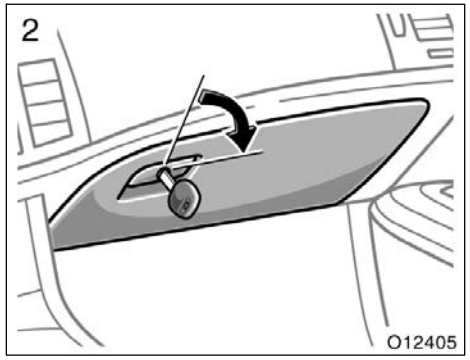


**2. After closing the glove box lid, insert the master key (vehicles with key cylinder−type ignition switch) or mechanical key (vehicles with smart key system) and turn it clockwise to safeguard the lock release switch.**

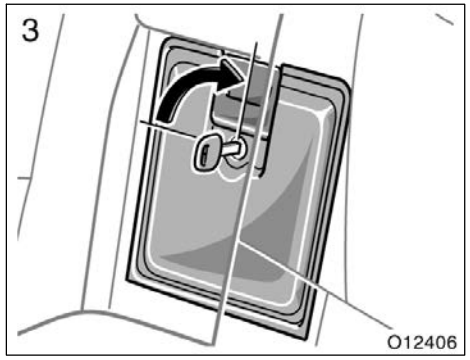


**3. After closing the door located behind the rear seat armrest, insert the master key (vehicles with key cylinder−type ignition switch) or mechanical key (vehicles with smart key system) and turn it clockwise to lock the door.**

After closing the trunk lid, try pulling it up to make sure it is securely locked.

## —Internal trunk release strap

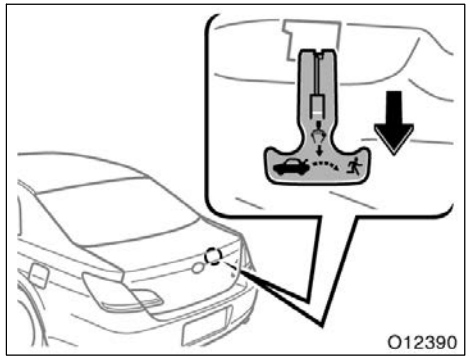


**If a person is locked in the trunk, he/she can pull down the phosphorescent strap on the inside of trunk lid to open the trunk lid.**

The phosphorescent (glow−in−the−dark) strap will continue to glow for a time after the trunk lid is closed. Exposing the strap to stronger light will cause it to glow longer.

**⚠ CAUTION**

- **Always lock the trunk lid and all doors, and keep away the vehicle keys out of children's reach.**
- **Never leave children unattended in the vehicle. Unsupervised children may lock themselves in the vehicle or trunk and suffer serious injuries or death.**

## Hood

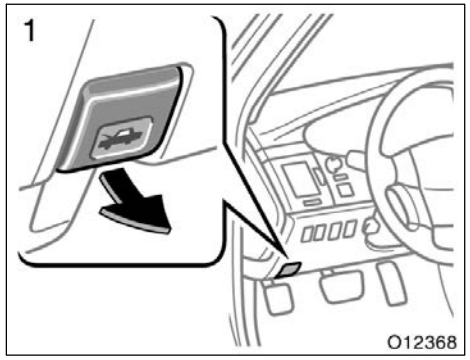


**To open the hood:**

1. **Pull the hood lock release lever. The hood will spring up slightly.**

**⚠ CAUTION**

**Before driving, be sure that the hood is closed and securely locked. Otherwise, the hood may open unexpectedly while driving and an accident may occur.**

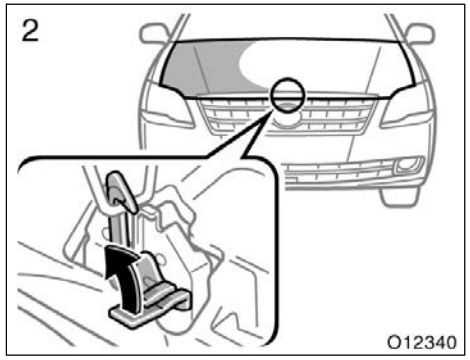


2. **In front of the vehicle, pull up the auxiliary catch lever and lift the hood.**

Before closing the hood, check to see that you have not forgotten any tools, rags, etc. Then lower the hood and make sure it locks into place. If necessary, press down gently on the front edge to lock it.

## Theft deterrent system

**To deter vehicle theft, the system is designed to sound an alarm if any of the doors, trunk or hood is forcibly unlocked or the battery terminal is disconnected and then reconnected when the vehicle is locked.**

**The alarm also sounds, when someone attempts to break the side windows.**

The alarm blows the horn intermittently and flashes the headlights, turn signal lights, tail lights and interior light.

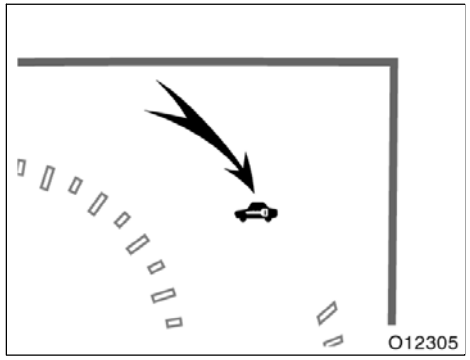


**Indicator light**

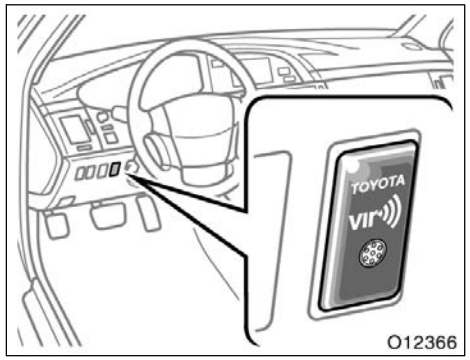


**Glass breakage sensor**

**SETTING THE SYSTEM**

1. Vehicles with key cylinder–type ignition switch—The key is removed from the ignition switch.

   Vehicles with smart key system—The ignition switch is turned off.

The engine immobilizer system is set and the indicator light will start flashing. (For details, see “Engine immobilizer system” on page 16 in this Section.)

2. Have all passengers get out of the vehicle.
3. Close and lock all the doors, trunk and hood.

The indicator light will remain on when all the doors, trunk and hood are closed and locked.

The theft deterrent system will automatically be set after 30 seconds. When the system is set, the indicator light will start flashing again.

4. After making sure the indicator light starts flashing, you may leave the vehicle.

Never leave anyone in the vehicle when you set the system, because unlocking from the inside will activate the system.

## WHEN THE SYSTEM IS SET

### Activating the system

The system will sound the alarm under the following conditions:

- If any of the doors is unlocked or if the trunk or hood is forcibly opened without the key, wireless remote control or entry function of the smart key system.
- If the battery terminal is disconnected and then reconnected.
- If the ignition is hotwired.

Vehicles with the glass breakage sensor—

- The side windows are tapped or broken.

The indicator light will come on when the system is activated.

All the doors will be automatically locked again when the following two conditions are met:

- If any of the doors is unlocked without the key, wireless remote control or entry function of the smart key system.
- If the key is not in the ignition switch (vehicles with key cylinder–type ignition switch) or the ignition switch is set to off (vehicles with smart key system).

After one minute, the alarm will automatically stop and the indicator light will start flashing again.

### Reactivating the alarm

Once set, the system automatically resets the alarm after the alarm stops.

The alarm will activate again under the same circumstances described in “Activating the system”.

### Stopping the alarm

The alarm will be stopped by the following three ways:

- Set the ignition switch to ON.
- Unlock any of the doors with the key, wireless remote control or entry function of the smart key system.
- Open the trunk with the wireless remote control or entry function of the smart key system.

## CANCELLING THE SYSTEM

The system will be cancelled by the above mentioned 3 ways.

If the tail lights come on for 2 seconds, the theft deterrent system has been alarmed. Check to see if there is any abnormality with your vehicle.

## TESTING THE SYSTEM

1. Open all the windows.
2. Set the system as described above. The doors should be locked with the key, wireless remote control or entry function of the smart key system. Be sure to wait until the indicator light starts flashing.
3. Unlock any door from the inside. The system should activate the alarm.
4. Stop the alarm as described above.
5. Repeat this operation for the other doors, trunk and hood. When testing the hood, also check that the system is activated when the battery terminal is disconnected and then reconnected.

If the system does not work properly, have it checked by your Toyota dealer.

## Fuel tank cap

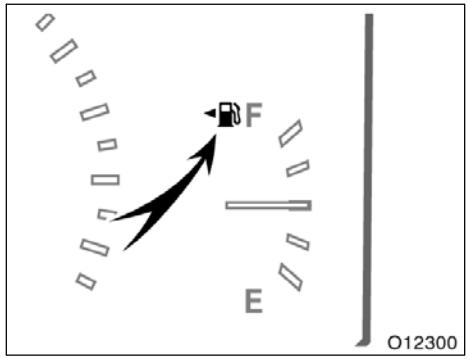


**This indicates that the fuel filler door is on the left side of your vehicle.**

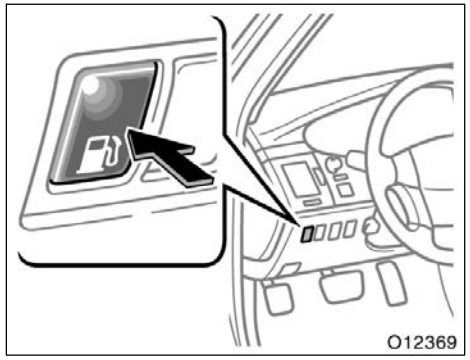


**1. To open the fuel filler door, push the opener switch.**

**When refueling, turn off the engine.**

**⚠ CAUTION**

- **Do not smoke, cause sparks or allow open flames when refueling. The fumes are flammable.**
- **When opening the cap, do not remove the cap quickly. In hot weather, fuel under pressure could cause injury by spraying out of the filler neck if the cap is suddenly removed.**

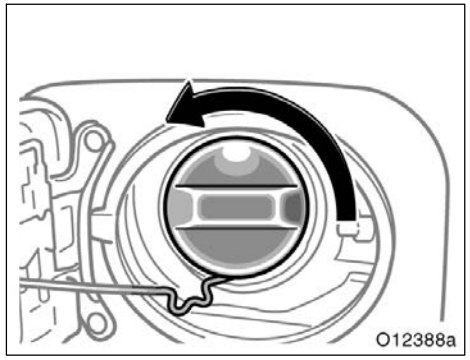


**2. To remove the fuel tank cap, turn the cap slowly counterclockwise, then pause slightly before removing it.**

It is not unusual to hear a slight swoosh when the cap is opened.

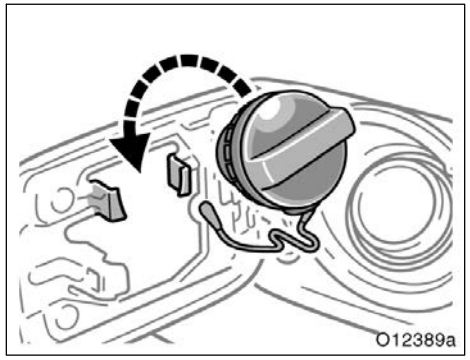


**3. The removed cap can be stored on the back side of the fuel filler door.**

When installing the cap, turn the cap clockwise until you hear a click. When you hear the click, the cap is fully closed.

If the cap is not installed securely, the malfunction indicator lamp comes on. Make sure the cap is tightened securely.

The indicator lamp goes off after driving several times. If the indicator lamp does not go off, contact your Toyota dealer as soon as possible.

**⚠ CAUTION**

- **Make sure the cap is installed securely to prevent fuel spillage in the event of an accident.**
- **Use only a genuine Toyota fuel tank cap for replacement. It is designed to regulate fuel tank pressure.**

***NOTICE***

***To prevent damage to the cap, apply force only in the turning direction to the cap. Do not pull or pry it.***

## Electric moon roof

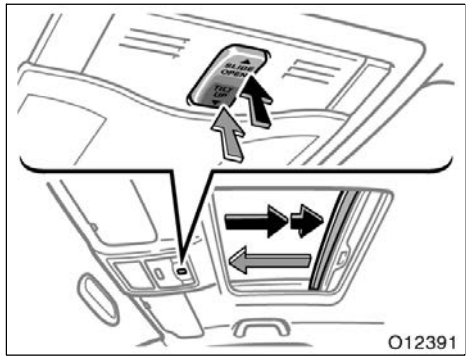


**Sliding operation**

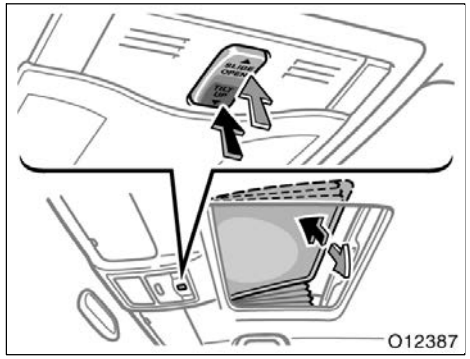


**Tilting operation**

**To operate the moon roof, use the switch between the personal lights.**

The moon roof works when the ignition switch is set at ON.

The sunshade can be opened or closed by hand.

**Sliding operation—**

To open: Push and hold the switch for 1 second on the “SLIDE OPEN” side.

The roof will open and stop partway 50 mm (2.0 in.) from the fully opened position. When you push the “SLIDE OPEN” side again, the moon roof will open fully. To stop the roof partway, push the switch on either the “SLIDE OPEN” or “TILT UP” side briefly.

As driving with the moon roof opened fully will cause wind throbs, we recommend you to drive with the moon roof partway 50 mm (2.0 in.) from the fully opened position.

The sunshade will be opened together with the roof.

To close: Push and hold the switch for 1 second on the “TILT UP” side.

The roof will fully close automatically. To stop the roof partway, push the switch on either the “SLIDE OPEN” or “TILT UP” side briefly.

**Tilting operation—**

To tilt up: Push and hold the switch for 1 second on the “TILT UP” side.

The roof will fully tilt up automatically. To stop the roof partway, push the switch on either the “SLIDE OPEN” or “TILT UP” side briefly.

To tilt down: Push and hold the switch for 1 second on the “SLIDE OPEN” side.

The roof will fully tilt down automatically. To stop the roof partway, push the switch on either the “SLIDE OPEN” or “TILT UP” side briefly.

**Key off operation:** If both front doors are closed, the moon roof works for 43 seconds even after the ignition switch is turned off. It stops working when either door is opened.

**Jam protection function:** If something gets caught between the moon roof and frame during closing operation, the moon roof stops and opens half way.

If the moon roof receives a strong impact, this function may work even if nothing is caught.

**If the moon roof does not operate automatically or the jam protection function does not operate correctly, you should normalize the moon roof.**

To normalize the moon roof, push and hold the switch on the “TILT UP” side until the moon roof tilts all the way up and then tilts down a little automatically.

Make sure that the moon roof opens and closes automatically. If the moon roof cannot be operated properly, have it checked by your Toyota dealer.

**⚠ CAUTION**

**To avoid death or serious personal injury, you must do the following.**

- **While the vehicle is moving, always keep the heads, hands and other parts of the bodies of all occupants away from the roof opening. Otherwise, they could be killed or seriously injured if the vehicle stops suddenly or if the vehicle is involved in an accident.**
- **Before you close the moon roof, always make sure there is nobody around the moon roof. You must also make sure nobody places his or her head, hands and other parts of the body in the roof opening. If someone's neck, head or hands get caught in the closing roof, it could result in death or serious injury. When anyone closes the moon roof, first make sure it is safe to do so.**
- **Be sure to carry the key when you leave your vehicle.**
- **Never leave anyone (particularly a small child) alone in your vehicle, with the key left in the vehicle. Otherwise, he/she could use the moon roof switches and get trapped in the roof opening. Unattended person (particularly a small child) can be involved in a serious accident.**
- **Never sit on top of the vehicle around the roof opening.**
- **Never try jamming any part of your body to activate the jam protection function intentionally, as it could result in a death or serious injury.**
- **The jam protection function may not work if something gets caught just before the moon roof is fully closed.**

# SECTION 1 – 3

## OPERATION OF INSTRUMENTS AND CONTROLS

### Occupant restraint systems


Seats . . . . . 56
Front seats . . . . . 56
Driving position memory system . . . . . 60
Rear seats . . . . . 63
Trunk storage extension . . . . . 64
Head restraints . . . . . 65
Armrest . . . . . 65
Seat ventilators/heaters . . . . . 66
Seat belts . . . . . 68
SRS airbags . . . . . 79
Child restraint . . . . . 98

## Seats

While the vehicle is being driven, all vehicle occupants should have the seatback upright, sit well back in the seat and properly wear the seat belts provided.

**⚠ CAUTION**

- **Do not drive the vehicle unless the occupants are properly seated. Do not allow any passengers to sit in the luggage compartment or cargo area. Persons not properly seated and/or not properly restrained by seat belts can be killed or severely injured in the event of emergency braking or a collision.**
- **During driving, do not allow any passengers to stand up or move around between seats. Otherwise, death or severe injuries can occur in the event of emergency braking or a collision.**

## Front seats—
## —Front seat precautions

**Driver seat**

**⚠ CAUTION**

**The SRS driver airbag deploys with considerable force, and can cause death or serious injury especially if the driver is very close to the airbag. The National Highway Traffic Safety Administration ("NHTSA") advises:**

**Since the risk zone for driver airbag is the first 50—75 mm (2—3 in.) of inflation, placing yourself 250 mm (10 in.) from your driver airbag provides you with a clear margin of safety. This distance is measured from the center of the steering wheel to your breastbone. If you sit less than 250 mm (10 in.) away now, you can change your driving position in several ways:**

- **Move your seat to the rear as far as you can while still reaching the pedals comfortably.**
- **Slightly recline the back of the seat. Although vehicle designs vary, many drivers can achieve the 250 mm (10 in.) distance, even with the driver seat all the way forward, simply by reclining the back of the seat somewhat. If reclining the back of your seat makes it hard to see the road, raise yourself by using a firm, non−slippery cushion, or raise the seat if your vehicle has that feature.**
- **If your steering wheel is adjustable, tilt it downward. This points the airbag toward your chest instead of your head and neck.**

**The seat should be adjusted as recommended by NHTSA above, while still maintaining control of the foot pedals, steering wheel, and your view of the instrument panel controls.**

Front passenger seat

**CAUTION**

- The SRS front passenger airbag also deploys with considerable force, and can cause death or serious injury especially if the front passenger is very close to the airbag. The front passenger seat should be as far from the airbag as possible with the seatback adjusted, so the front passenger sits upright.

Front seats (with SRS side airbags)

**CAUTION**

The SRS side airbags are installed in the driver and front passenger seats. Observe the following precautions.

- Do not lean against the front door when the vehicle is in use, since the side airbag inflates with considerable speed and force. Otherwise, you may be killed or seriously injured.
- Do not use seat accessories which cover the area where the side airbags inflate. Such accessories may prevent the side airbags from activating correctly, causing death or serious injury.
- Do not modify or replace the seats or upholstery of the seats with side airbags. Such change may prevent the side airbag system from activating correctly, disable the system, or cause the side airbags to inflate accidentally, resulting in death or serious injury.

## —Seat adjustment precautions

**CAUTION**

- Do not adjust the seat while the vehicle is moving as the seat may unexpectedly move and cause the driver to lose control of the vehicle.
- Be careful that the seat does not hit a passenger or luggage.
- After adjusting the seat position, release the lever and try sliding the seat forward and backward to make sure it is locked in position.
- After adjusting the seatback, push your body back against the seat to make sure the seat is locked in position.
- Do not put objects under the seats. Otherwise, the objects may interfere with the seat–lock mechanism or unexpectedly push up the seat position adjusting lever and the seat may suddenly move, causing the driver to lose control of the vehicle.
- While adjusting the seat, do not put your hands under the seat or near the moving parts. Otherwise, your hands or fingers may be caught and injured.

**NOTICE**

***Do not operate the control switch in more than one dimension at a time. It may cause electrical overload.***

## —Adjusting front seats (manual seat)

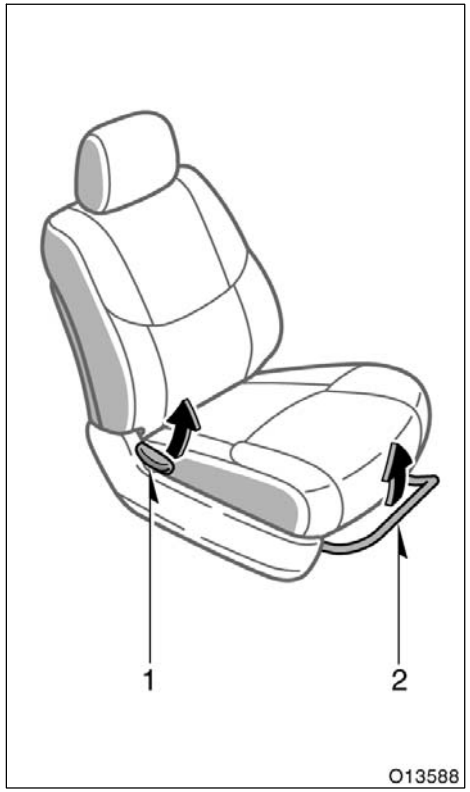


**1. SEATBACK ANGLE ADJUSTING LEVER**

**Lean forward and pull the lever up. Then lean back to the desired angle and release the lever.**

**⚠ CAUTION**

**Avoid reclining the seatback any more than needed. The seat belts provide maximum protection in a frontal or rear collision when the driver and the front passenger are sitting up straight and well back in the seats. If you are reclined, the lap belt may slide past your hips and apply restraint forces directly to the abdomen or your neck may contact the shoulder belt. In the event of a frontal collision, the more the seat is reclined, the greater the risk of death or serious injury.**

**2. SEAT POSITION ADJUSTING LEVER**

**Hold the center of the lever and pull it up. Then slide the seat to the desired position with slight body pressure and release the lever.**

## —Adjusting front seats (power seat)

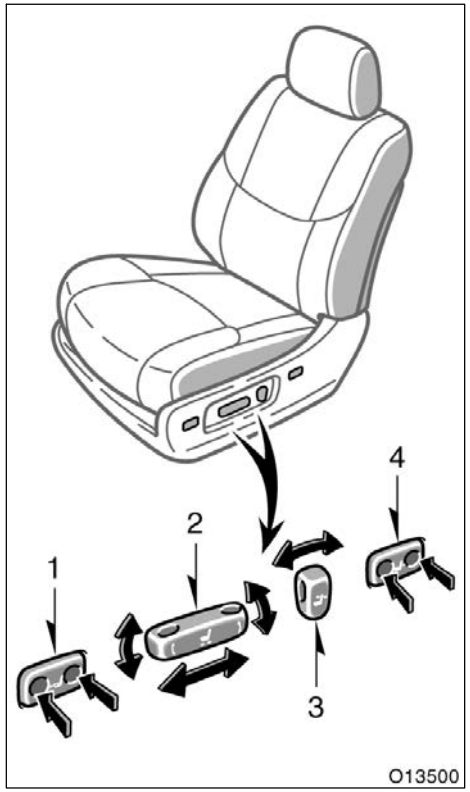


1. **SEAT LEG SUPPORT ADJUSTING SWITCH (some models on driver's side)**

**Operating this switch raises the front edge of the seat cushion.**

**Push the switch on either side.**

Releasing the switch will stop the seat cushion at that position.

Do not place anything under the front seats, as this might interfere with the seat movement.

2. **SEAT POSITION AND SEAT CUSHION ANGLE ADJUSTING SWITCH (driver's side only)**

**Move the control switch in the desired direction.**

Releasing the switch will stop the seat at that position.

Do not place anything under the front seats, as this might interfere with the seat movement.

3. **SEATBACK ANGLE ADJUSTING SWITCH**

**Move the control switch in the desired direction.**

Releasing the switch will stop the seatback at that position.

**⚠ CAUTION**

**Avoid reclining the seatback any more than needed. The seat belts provide maximum protection in a frontal or rear collision when the driver and the front passenger are sitting up straight and well back in the seats. If you are reclined, the lap belt may slide past your hips and apply restraint forces directly to the abdomen or your neck may contact the shoulder belt. In the event of a frontal collision, the more the seat is reclined, the greater the risk of death or serious injury.**

4. **SEAT LUMBAR SUPPORT ADJUSTING SWITCH (driver's side only)**

**Push the switch on either side.**

The amount of lumbar support will change while the switch is pushed.

## Driving position memory system—

**This system can memorize the position of the driver's seat and outside rear view mirrors, and recall them at the touch of a button.**

**Buttons "1" and "2" can memorize two separate positions.**

## —Memory call system using memory buttons

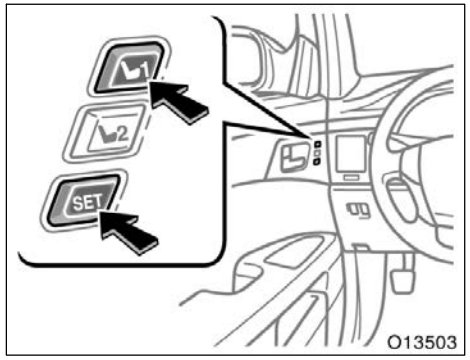


**SETTING THE DRIVING POSITION**

The ignition switch must be set at ON and the shift lever is in the "P" position.

1. **Adjust the driver's seat and outside rear view mirrors to the desired position.**
2. **While pushing the "SET" button, push button "1" or "2" until a beep is heard.**

The system can memorize up to 2 positions by repeating the above steps. If step 2 is performed when both buttons "1" and "2" are memorized, the previous position will be erased and a new position will be set.

To make only slight changes to an already memorized position, the easiest way is to first activate the memorized position, then make the desired changes and perform step 2 above.

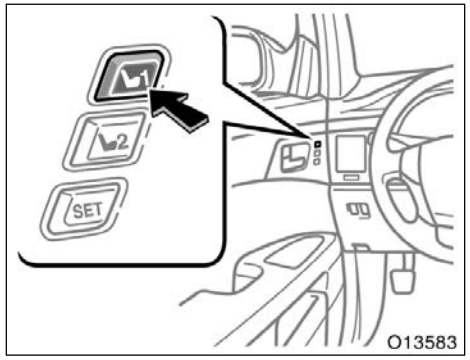


**RECALLING THE MEMORIZED POSITION**

**When you push button “1” or “2”, a beep will sound and the driving position will be automatically adjusted to the position recorded for that button.**

The memorized position can be recalled under the following conditions:

- The ignition switch is set at ON and the shift lever is in the “P” position with the brake pedal released.
- The key is not in the ignition switch (vehicles with key cylinder–type ignition switch) or the ignition is turned off (vehicles with smart key system), and less than 30 seconds have passed since opening the driver’s door.

To stop the operation, push any driving position memory button.

To reactivate the system, push the button “1” or “2” again.

If the vehicle’s battery is disconnected, the memory will be erased and the memorized positions will have to be set again.

**CAUTION**

- **Do not start the vehicle while the adjustments are being made.**
- **Take care not to select the wrong button, or the seat could strike the rear passenger or hit your body against the steering wheel. If this happens, you can stop the movement by pressing another driving position memory switch, or depressing the brake pedal.**

## —Memory call system using the electronic key (smart key system only)

**When the driver’s door is opened, you can recall the memorized position using the wireless remote control function or the entry function of the smart key system.**

This function can be used after setting the driving position by following procedure.

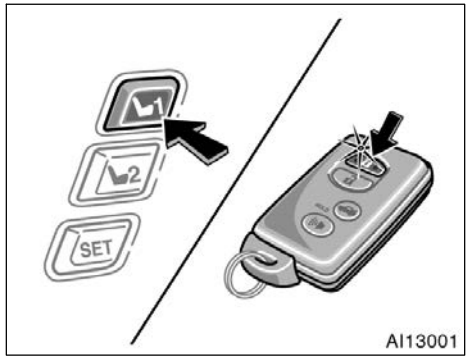


**REGISTERING THE DRIVING POSITION ONTO THE ELECTRONIC KEY**

An electronic key can memorize only one driving position.

The driver's door must be closed with the ignition switch is turned off.

1. **Push and hold the previously memorized driving position button "1" or "2".**
2. **While depressing the button above–mentioned, push and hold the lock or unlock button on the electronic key until a beep sounds.**

If you want to set other driving position, repeat the above procedure. The previous setting will be erased and the new position will be set.

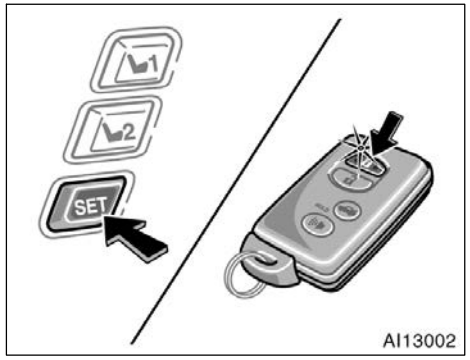


**CANCELING THE DRIVING POSITION ON TO THE ELECTRONIC KEY**

The driver's door must be closed with the ignition switch turned off.

1. **Push and hold the "SET" switch.**
2. **Push and hold the lock or unlock button on the electronic key until two beeps sound.**

The memory on the key is disabled. To enable it again, repeat the above procedure.

## Rear seats

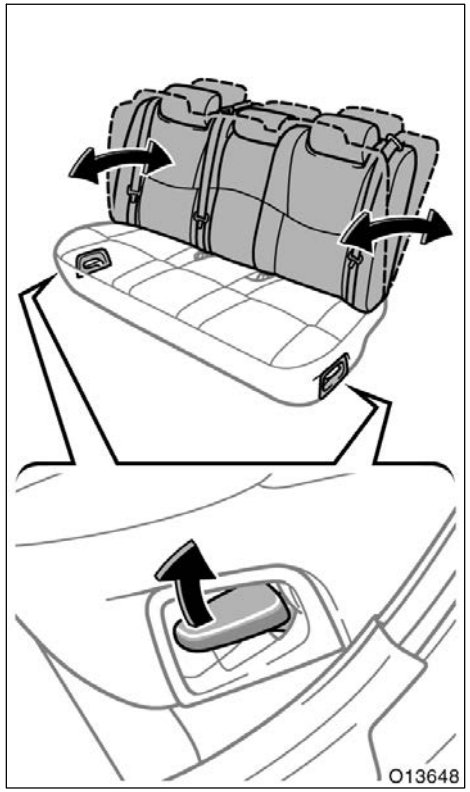


**SEATBACK ANGLE ADJUSTING LEVER**

**Lean forward and pull the lever up. Then lean back to the desired angle and release the lever.**

**⚠ CAUTION**

- **Adjustment should not be made while the vehicle is moving.**
- **When adjusting the seat, be careful that the seat does not hit a passenger or luggage.**
- **After adjusting the seatback, push back your body to make sure it is locked in position.**
- **When operating the seat, be careful not to get your hands or feet pinched in the seat.**

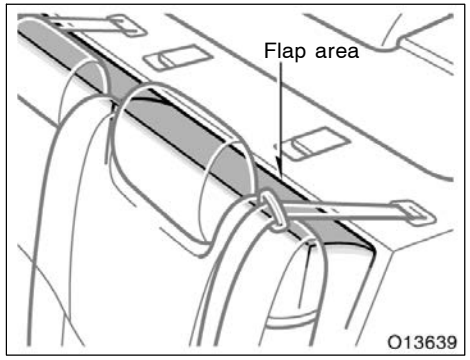


- **Do not place objects on the flap area. Objects placed behind the rear seat may fall into the gap behind the seatback. If objects are left in the gap, the reclining seatback will not lock properly, leaving the seatback free to move. When the vehicle is in operation, moving seatbacks may cause injury.**

  **In the event that an object gets caught behind the rear seatback, contact your Toyota dealer.**

## Trunk storage extension

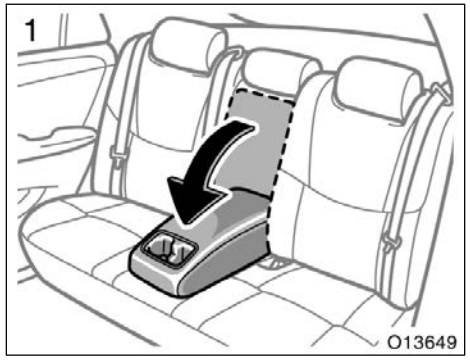


**1. Pull down the armrest in the rear seat.**

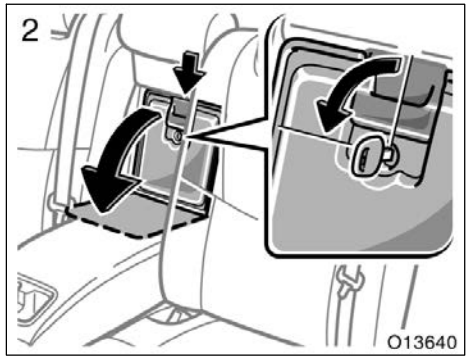


**2. Push down the handle and open the door.**

If the door is locked, insert the key and turn it counterclockwise to unlock. Use the master key (vehicles with the key cylinder–type ignition switch) or mechanical key (vehicles with the smart key system).

Lock the door after use to protect items in the trunk.

See "—Stowage precautions" on page 290 in Section 2 for precautions when loading luggage.

**⚠ CAUTION**

**To reduce the chance of injury in case of an accident or a sudden stop, always keep the door behind the armrest closed when not in use.**

## Head restraints

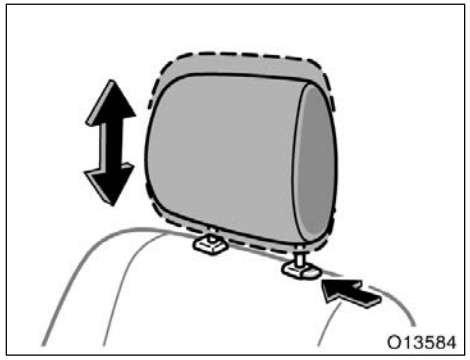


Front

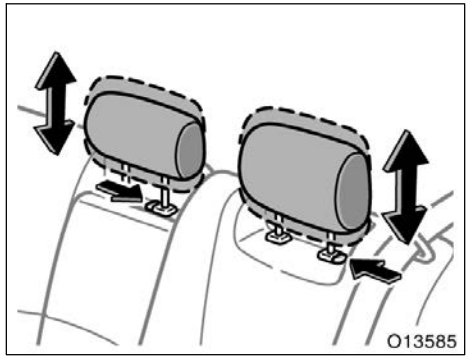


Rear

**For your safety and comfort, adjust the head restraint before driving.**

To raise: Pull it up.
To lower: Push it down while pressing the lock release button.

The head restraint is most effective when it is close to your head. Therefore, using a cushion on the seatback is not recommended.

**⚠ CAUTION**

- **Adjust the center of the head restraint so that it is closest to the top of your ears.**
- **After adjusting the head restraint, make sure it is locked in position.**
- **Do not drive with the head restraints removed.**

## Armrest

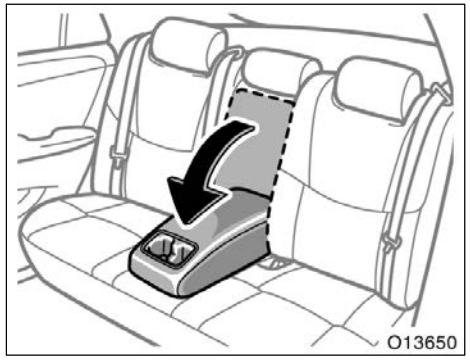


Type A

Type B

**To use the armrest, pull it down as shown above.**

| NOTICE |
| --- |
| ***To prevent damage to the armrest, avoid putting heavy loads on it.*** |

## Seat ventilators/heaters—
## —Seat heater

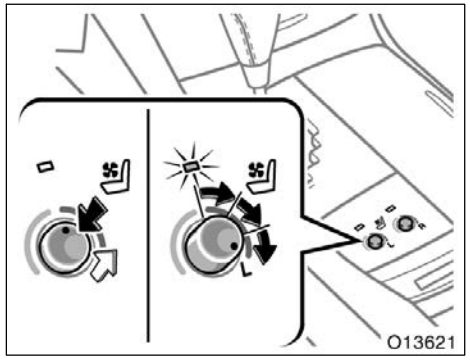


**With seat ventilator**

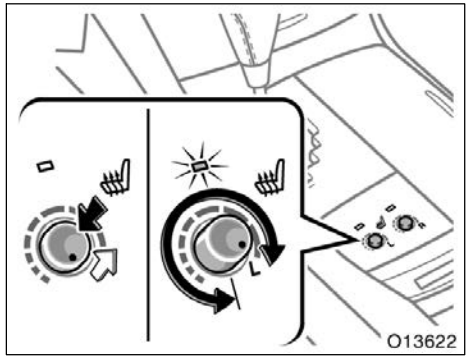


**Without seat ventilator**

**The front seat heater has two switches: one marked "L" (for driver's seat) and the other marked "R" (for front passenger's seat).**

**To turn on the seat heater, push the knob to pop it out and turn the knob clockwise.**

At this time, the indicator light will illuminate to indicate the seat heater is operating.

The ignition switch must be set at ON to operate seat heaters.

With seat ventilator: Three setting levels are available.

To disable this function, turn the knob to the center position. The indicator light goes off.

Without seat ventilator: To adjust temperature, turn the knob.

To disable this function, turn the knob to the leftmost position. The indicator light goes off.

Push the knob into the recessed position when not in use.

**⚠ CAUTION**

**Occupants must use caution when operating the seat heater because it may make them feel too hot or cause burns at low temperatures (erythema, varicella). Use extra caution for;**

- **Babies, small children, elderly persons, sick persons or persons with physical disabilities**
- **Persons who have sensitive skin**
- **Persons who are exhausted**
- **Persons who have taken alcohol or drugs which induce sleep (sleeping drug, cold remedy, etc.)**

**To prevent the seat from overheating, do not use the seat heater with a blanket, cushion, or other insulating objects which cover the seat.**

***NOTICE***

- ***Do not put unevenly weighed objects on the seat and do not stick sharp objects (needles, nails, etc.) into the seat.***
- ***When cleaning the seats, do not use organic substances (paint thinner, benzine, alcohol, gasoline, etc.). They may damage the seat ventilation/heating system and seat surface.***
- ***Before cleaning the seats, fully wring out the towel that will be used. Water entering the seats may cause the seat ventilation/heating system to malfunction.***
- ***To prevent the battery from being discharged, turn the switches off when the engine is not running.***

## —Seat ventilator

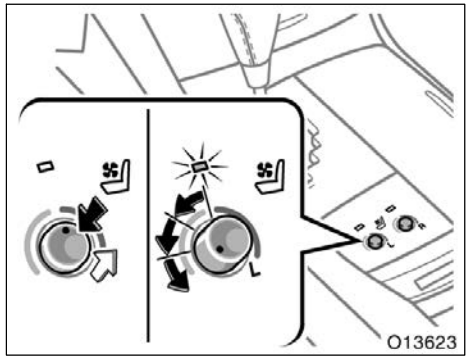


**The front seat ventilator has two switches: one marked “L” (for driver’s seat) and the other marked “R” (for front passenger’s seat).**

**To turn on the seat ventilator, push the knob to pop it out and then turn the knob counterclockwise.**

At this time, the indicator light will illuminate to indicate the seat ventilator is operating.

The ignition switch must be set at ON to operate seat ventilators.

Three setting levels are available.

To disable this function, turn the knob to the center position. The indicator light goes off.

Push the knob into the recessed position when not in use.

**NOTICE**

- ***Do not put unevenly weighted objects on the seat and do not stick sharp objects (needles, nails, etc.) into the seat.***
- ***When cleaning the seats, do not use organic substances (paint thinner, benzine, alcohol, gasoline, etc.). They may damage the seat ventilation/heating system and seat surface.***
- ***Before cleaning the seats, fully wring out the towel that will be used. Water entering the seats may cause the seat ventilation/heating system to malfunction.***
- ***To prevent the battery from being discharged, turn the switches off when the engine is not running.***

## Seat belts—
## —Seat belt precautions

Toyota strongly urges that the driver and passengers in the vehicle be properly restrained at all times with the seat belts provided. Failure to do so could increase the chance of injury and/or the severity of injury in accidents.

The seat belts provided for your vehicle are designed for people of adult size, large enough to properly wear them.

**Child.** Use a child restraint system appropriate for the child until the child becomes large enough to properly wear the vehicle's seat belts. See "Child restraint" on page 98 in this Section for details.

If a child is too large for a child restraint system, the child should sit in the rear seat and must be restrained using the vehicle's seat belt. According to accident statistics, the child is safer when properly restrained in the rear seat than in the front seat.

If a child must sit in the front seat, the seat belts should be worn properly. If an accident occurs and the seat belts are not worn properly, the force of the rapid inflation of the airbag may cause death or serious injury to the child.

Do not allow any children to stand up or kneel on either rear or front seats. An unrestrained child could suffer serious injury or death during emergency braking or a collision. Also, do not let the child sit on your lap. Holding a child in your arms does not provide sufficient restraint.

**Pregnant woman.** Toyota recommends the use of a seat belt. Ask your doctor for specific recommendations. The lap belt should be worn securely and as low as possible over the hips and not on the waist.

**Injured person.** Toyota recommends the use of a seat belt. Depending on the injury, first check with your doctor for specific recommendations.

**⚠ CAUTION**

**Persons should ride in their seats properly wearing their seat belts whenever the vehicle is moving. Otherwise, they are much more likely to suffer serious bodily injury or death in the event of sudden braking or a collision.**

**When using the seat belts, observe the following:**

- **Use the belt for only one person at a time. Do not use a single belt for two or more people—even children.**
- **Avoid reclining the seatback any more than needed. The seat belts provide maximum protection in a frontal or rear collision when the driver and the front passenger are sitting up straight and well back in the seats. If you are reclined, the lap belt may slide past your hips and apply restraint forces directly to the abdomen or your neck may contact the shoulder belt. In the event of a frontal collision, the more the seat is reclined, the greater the risk of death or serious injury.**
- **Be careful not to damage the belt webbing or hardware. Take care that they do not get caught or pinched in the seat or doors.**
- **Inspect the belt system periodically. Check for cuts, fraying, and loose parts. Damaged parts should be replaced. Do not disassemble or modify the system.**
- **Keep the belts clean and dry. If they need cleaning, use a mild soap solution or lukewarm water. Never use bleach, dye, or abrasive cleaners, or allow them to come into contact with the belts—they may severely weaken the belts. (See "Cleaning the interior" on page 337 in Section 5.)**
- **Replace the belt assembly (including bolts) if it has been used in a severe impact. The entire assembly should be replaced even if damage is not obvious.**

## —Fastening front and rear seat belts

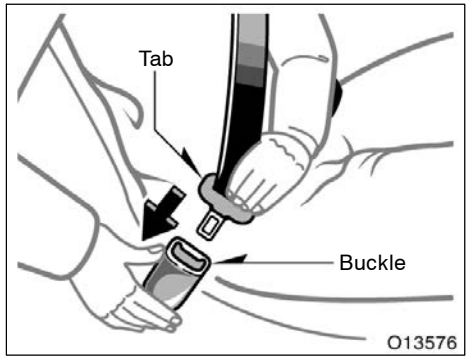


**Adjust the seat as needed and sit up straight and well back in the seat. To fasten your belt, pull it out of the retractor and insert the tab into the buckle.**

You will hear a click when the tab locks into the buckle.

The seat belt length automatically adjusts to your size and the seat position.

The retractor will lock the belt during a sudden stop or on impact. It also may lock if you lean forward too quickly. A slow, easy motion will allow the belt to extend, and you can move around freely.

When a passenger's shoulder belt is completely extended and is then retracted even slightly, the belt is locked in that position and cannot be extended. This feature is used to hold the child restraint system securely. (For details, see "Child restraint" on page 98 in this Section.) To free the belt again, fully retract the belt and then pull the belt out once more.

If the seat belt cannot be pulled out of the retractor, firmly pull the belt and release it. You will then be able to smoothly pull the belt out of the retractor.

**⚠ CAUTION**

- **After inserting the tab, make sure the tab and buckle are locked and that the belt is not twisted.**
- **Do not insert coins, clips, etc. in the buckle as this may prevent you from properly latching the tab and buckle.**
- **If the seat belt does not function normally, immediately contact your Toyota dealer. Do not use the seat until the seat belt is fixed, because it cannot protect an adult occupant or your child from death or serious injury.**

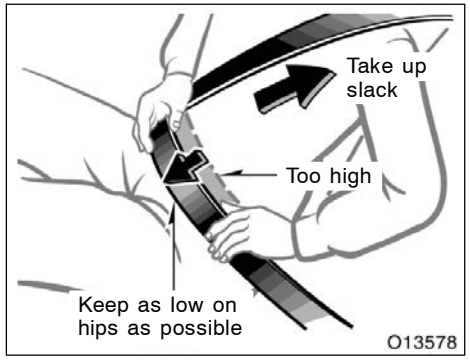


**Adjust the position of the lap and shoulder belts.**

Position the lap belt as low as possible on your hips—not on your waist, then adjust it to a snug fit by pulling the shoulder portion upward through the latch plate.

**⚠ CAUTION**

- **Both high–positioned lap belts and loose–fitting belts could cause death or serious injuries due to sliding under the lap belt during a collision or other unintended event. Keep the lap belt positioned as low on hips as possible.**
- **Do not place the shoulder belt under your arm.**

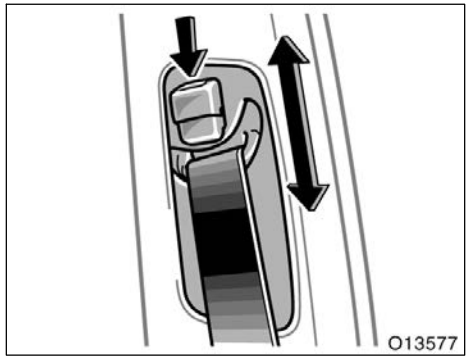


**Seat belts with an adjustable shoulder anchor—**

**Adjust the shoulder anchor position to your size.**

To raise: Slide the anchor up.
To lower: Push in the lock release button and slide the anchor down.

After adjustment, make sure the anchor is locked in position.

**⚠ CAUTION**

**Always make sure the shoulder belt is positioned across the center of your shoulder. The belt should be kept away from your neck, but not falling off your shoulder. Failure to do so could reduce the amount of protection in an accident and cause death or serious injuries in a collision.**

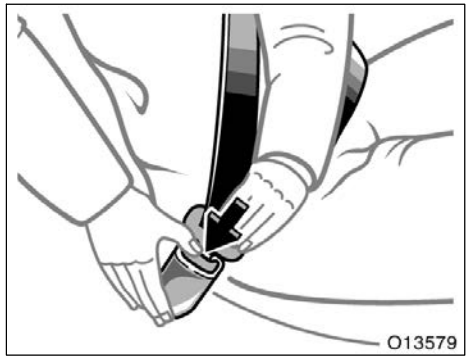


**To release the belt, press the buckle release button and allow the belt to retract.**

If the belt does not retract smoothly, pull it out and check for kinks or twists. Then make sure it remains untwisted as it retracts.

## —Seat belt comfort guides

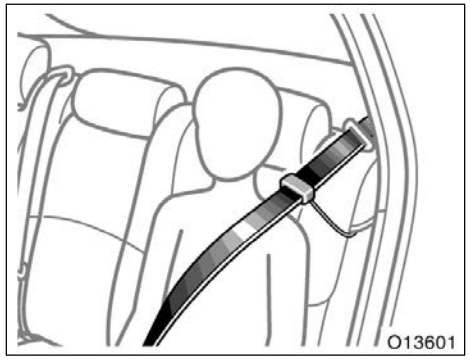


**The seat belt comfort guides for the rear seat outboard positions will provide added seat belt comfort for children who have outgrown child restraints and for small adults. When the outboard shoulder belt is inserted through the guide, the comfort guide pulls the belt away from the neck and head of an occupant.**

**To use the comfort guide, do as follows.**

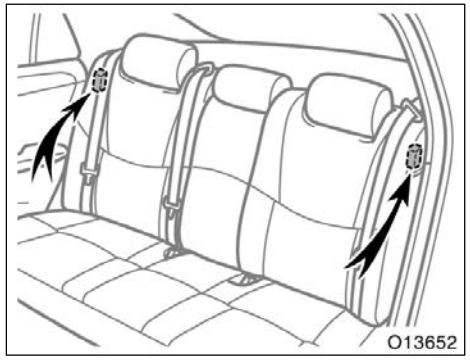


Seat belt comfort guides are stored in the both pockets on the sides of the rear seatback.

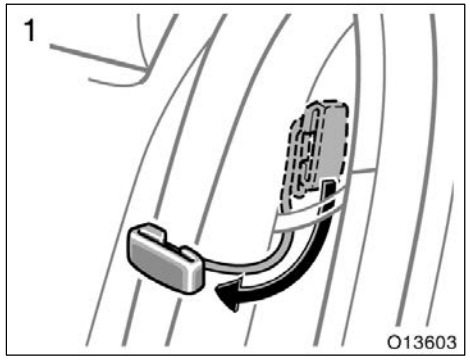


**INSTALLING THE COMFORT GUIDE**

**Adjust the seatback to the upright most position.**

1. **Pull the comfort guide from the pocket.**

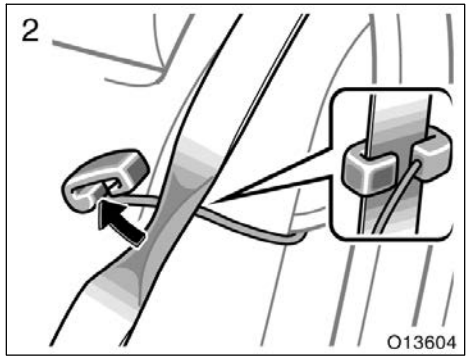


2. Pinch the two edges of the shoulder belt for the rear seat outboard position with your fingers and slide the belt past the slot of the guide as shown above. At this time, the elastic cord must be behind the seat belt.

**⚠ CAUTION**

**Make sure the belt is not twisted and that it lies flat. The elastic cord must be behind the belt and the guide must be on the front.**

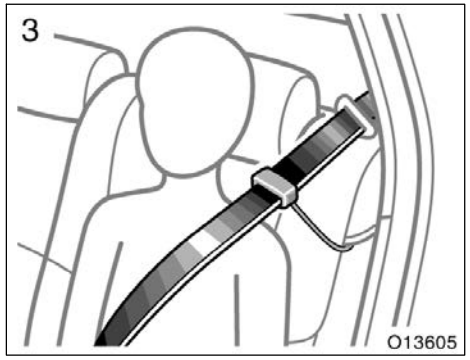


3. Buckle, position and release the seat belt. (For wearing the seat belt, see "—Fastening front and rear seat belts" on page 69 in this Section.)

**⚠ CAUTION**

**Always make sure the shoulder belt is positioned across the center of the shoulder. The belt should be kept away from the neck, and should not fall off the shoulder. Failure to observe these precautions could reduce the effectiveness of the seat belt in an accident, causing death or serious injury.**

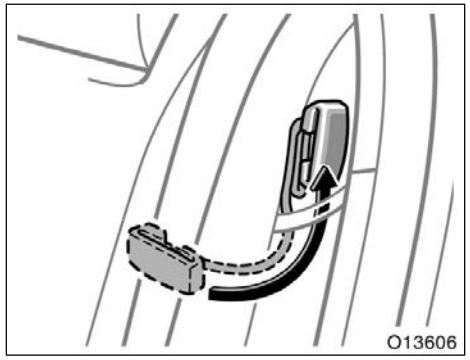


**REMOVING AND STORING THE COMFORT GUIDE**

**Pinch the two edges of the seat belt together so that you can slide them out of the guide. Store the guide with the elastic cord into the pocket.**

**⚠ CAUTION**

**To reduce the chance of injury in case of an accident or a sudden stop while driving, remove and store the comfort guide in its pocket when it is not in use.**

## —Stowing the rear seat belt buckles

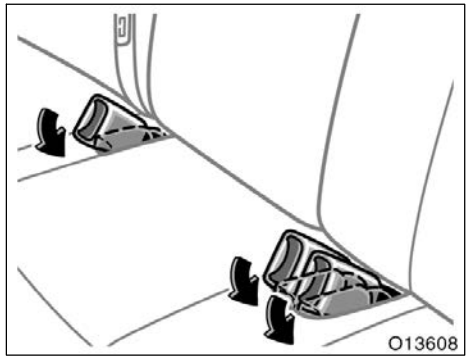


**The rear seat belt buckles can be stowed when not in use.**

## —Seat belt extender

If your seat belts cannot be fastened securely because they are not long enough, a personalized seat belt extender is available from your Toyota dealer free of charge.

Please contact your local Toyota dealer so that the dealer can order the proper required length for the extender. Bring the heaviest coat you expect to wear for proper measurement and selection of length. Additional ordering information is available at your Toyota dealer.

**⚠ CAUTION**

**When using the seat belt extender, observe the following precautions. Failure to follow these instructions could reduce the effectiveness of the seat belt restraint system in case of an accident, increasing the chance of death or serious injury.**

- **Remember that the extender provided for you may not be safe when used on a different vehicle, for another person, or at a different seating position than the one originally intended.**

- **If the seat belt extender has been connected to the driver's seat belt buckle without wearing the seat belt when using the extender in the driver's seat, the SRS driver's airbag system will judge that the driver wears the seat belt even if not wearing it. In this case, the driver's airbag may not activate correctly, causing death or serious injury in the event of collision. Be sure to wear the seat belt with the seat belt extender.**

- **Make sure the "AIRBAG ON" indicator light is illuminated when using the seat belt extender for the front passenger seat. If the "AIRBAG OFF" indicator light is illuminated, disconnect the extender tongue from the seat belt buckle, then reconnect the seat belt. Reconnect the seat belt extender after making sure the "AIRBAG ON" indicator light is illuminated. If you use the seat belt extender while the "AIRBAG OFF" indicator light is illuminated, the front passenger airbag and side airbag on the front passenger side may not activate correctly, causing death or serious injury in the event of collision.**
- **Be sure to wear the seat belt without the seat belt extender if you can fasten the seat belt without the extender.**

- **Do not use the seat belt extender when installing a child restraint system on the front or rear passenger seat. If installing a child restraint system with the seat belt extender connected to the seat belt, the seat belt will not securely hold the child restraint system, which could cause death or serious injury to the child or other passengers in the event of collision.**

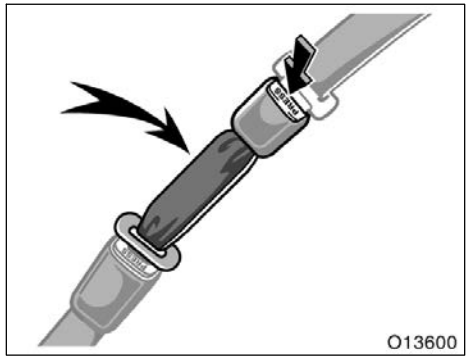


**To connect the extender to the seat belt, insert the tab into the seat belt buckle so that the "PRESS" signs on the buckle release buttons of the extender and the seat belt are both facing outward as shown.**

You will hear a click when the tab locks into the buckle.

When releasing the seat belt, press on the buckle release button on the extender, not on the seat belt. This helps prevent damage to the vehicle interior and extender itself.

As far as the seat belt extender on the front passenger side is concerned, do not fail to disconnect the extender from the seat belt after the above operation in order to activate the front passenger airbag correctly when getting into the vehicle next time.

When not in use, remove the extender and store in the vehicle for future use.

**⚠ CAUTION**

- **After inserting the tab, make sure the tab and buckle are locked and that the lap and shoulder portion of the belt and the seat belt extender are not twisted.**
- **Do not insert coins, clips, etc. in the buckle as this may prevent you from properly latching the tab and buckle.**
- **If the seat belt does not function normally, immediately contact your Toyota dealer. Do not use the seat until the seat belt is fixed, because it cannot protect an adult occupant or your child from death or serious injury.**

## —Seat belt pretensioners

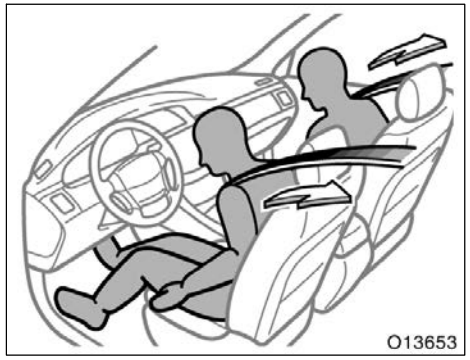


**The driver and front passenger seat belt pretensioners are designed to be activated in response to a severe frontal impact.**

When the sensor detects a severe frontal impact, the front seat belts are quickly drawn back by the retractors so that the belts snugly restrain the occupants.

The front passenger's seat belt pretensioner will not activate if no passenger is detected in the front passenger seat by the front passenger occupant classification system. However, the front passenger's seat belt pretensioner may activate if luggage is put on the seat, or the seat belt is buckled up regardless of the presence of an occupant in the seat. (As for the front passenger occupant classification system, see "—Front passenger occupant classification system" on page 94 in this Section.)

The seat belt pretensioners and SRS airbags may not operate together in all collisions.

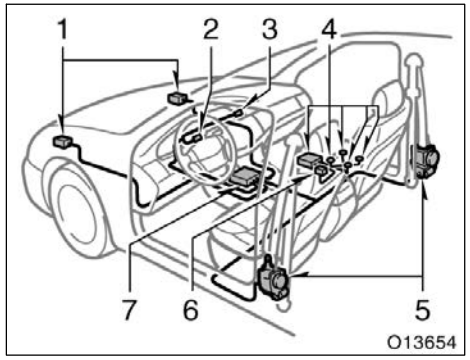


The seat belt pretensioner system consists mainly of the following components, and their locations are shown in the illustration.

1. Front airbag sensors
2. SRS warning light
3. "AIRBAG ON" and "AIRBAG OFF" indicator lights
4. Front passenger occupant classification system (ECU and sensors)
5. Seat belt pretensioner assemblies
6. Front passenger's seat belt buckle switch
7. Airbag sensor assembly

The seat belt pretensioners are controlled by the airbag sensor assembly. The airbag sensor assembly consists of a safing sensor and airbag sensor.

When the seat belt pretensioners are activated, an operating noise may be heard and a small amount of non–toxic gas may be released. This does not indicate that a fire is occurring. This gas is normally harmless.

Once the seat belt pretensioners have been activated, the seat belt retractors remain locked.

**⚠ CAUTION**

**Do not modify, remove, strike or open the seat belt pretensioner assemblies, airbag sensor or surrounding area or wiring. Failure to follow these instructions may prevent the seat belt pretensioners from activating correctly, cause sudden operation of the system or disable the system, which could result in death or serious injury. Consult your Toyota dealer about any repair and modification.**

**NOTICE**

***Do not perform any of the following changes without consulting your Toyota dealer. Such changes can interfere with proper operation of the seat belt pretensioners in some cases.***

- ***Installation of electronic devices such as a mobile two–way radio, cassette tape player or compact disc player***
- ***Repairs on or near the front seat belt retractor assemblies***
- ***Modification of the suspension system***
- ***Modification of the front end structure***
- ***Attachment of a grille guard (bull bar, kangaroo bar, etc.), snowplow, winches or any other equipment to the front end***
- ***Repairs made on or near the front fenders, front end structure or console***

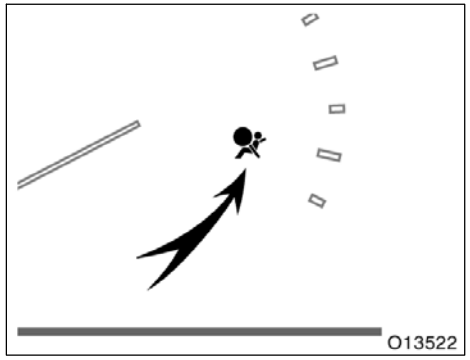


**This indicator comes on when the ignition switch is set at ON. It goes off after about 6 seconds. This means the seat belt pretensioners are operating properly.**

This warning light system monitors the airbag sensor assembly, front airbag sensors, side and curtain shield airbag sensors, curtain shield airbag sensors, driver's seat position sensor, driver's seat belt buckle switch, front passenger occupant classification system, "AIRBAG ON" indicator light, "AIRBAG OFF" indicator light, front passenger's seat belt buckle switch, seat belt pretensioner assemblies, inflators, interconnecting wiring and power sources. (For details, see "Service reminder indicators and warning buzzers" on page 145 in Section 1–6.)

If any of the following conditions occurs, this indicates a malfunction of the airbags or seat belt pretensioners. Contact your Toyota dealer as soon as possible.

- The light does not come on when the ignition switch is set at ON or remains on for more than 6 seconds.
- The light comes on while driving.
- If any seat belt does not retract or cannot be pulled out due to a malfunction or activation of the relevant seat belt pretensioner.
- The seat belt pretensioner assembly or surrounding area has been damaged.

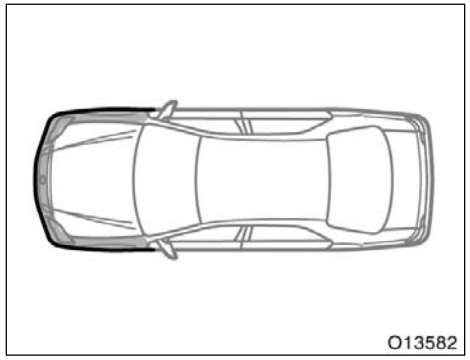


In the following cases, contact your Toyota dealer as soon as possible:

- The front of the vehicle (shaded in the illustration) was involved in an accident that was not severe enough to cause the seat belt pretensioners to operate.
- Either seat belt pretensioner assembly or surrounding area is scratched, cracked, or otherwise damaged.

## SRS airbags—
## —SRS driver airbag, driver knee airbag and front passenger airbag

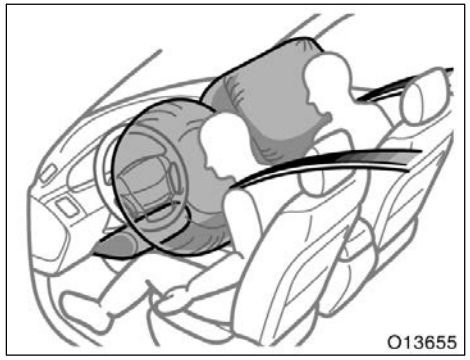


**The SRS (Supplemental Restraint System) front airbags are designed to provide further protection for the driver and front passenger in addition to the primary safety protection provided by the seat belts.**

Your vehicle is equipped with “ADVANCED AIRBAGS” designed based on US motor vehicle safety standards (FMVSS208). The airbag system controls airbag deployment power for the driver and front passenger. The driver airbag system consists of the driver seat’s position sensor, etc. The front passenger’s airbag system consists of the front passenger occupant classification sensor, etc.

In response to a severe frontal impact, the SRS front airbags work with the seat belts to help reduce injury by inflating. The SRS front airbags help reduce injuries mainly to the driver’s or front passenger’s head, chest or knee caused by hitting the vehicle interior.

The SRS front passenger airbag will not activate if there is no passenger sitting in the front passenger seat. However, the front passenger airbag may deploy if luggage is put in the seat, or the seat belt is buckled up, regardless of the presence of an occupant in the seat. (As for the front passenger occupant classification system, see “—Front passenger occupant classification system” on page 94 in this Section.)

Always wear your seat belt properly.

**CAUTION**

- **The SRS front airbag system is designed only as a supplement to the primary protection of the driver and front passenger seat belt systems. The driver and front passenger can be killed or seriously injured by the inflating airbags if they do not wear the available seat belts properly. During sudden braking just before a collision, an unrestrained driver or front passenger can move forward into direct contact with or close proximity to the airbag which may then deploy during the collision. To ensure maximum protection in an accident, the driver and all passengers in the vehicle must wear their seat belts properly. Wearing a seat belt properly during an accident reduces the chances of death or serious injury or being thrown out of the vehicle. For instructions and precautions concerning the seat belt system, see "Seat belts" on page 68 in this Section.**

- **Improperly seated and/or restrained infants and children can be killed or seriously injured by the deploying front airbags. An infant or child who is too small to use a seat belt should be properly secured using a child restraint system. Toyota strongly recommends that all infants and children be placed in the rear seat of the vehicle and properly restrained. The rear seat is the safest for infants and children. For instructions concerning the installation of a child restraint system, see "Child restraint" on page 98 in this Section.**

**The SRS front airbags are designed to deploy in severe (usually frontal) collisions where the magnitude and duration of the forward deceleration of the vehicle exceeds the designed threshold level.**

The SRS front airbags will deploy if the severity of the impact is above the designed threshold level, comparable to an approximate 25 km/h (15 mph) collision when the vehicle has the impact straight into a fixed barrier that does not move or deform.

However, this threshold velocity will be considerably higher if the vehicle strikes an object, such as a parked vehicle or sign pole, which can move or deform on impact, or if the vehicle is involved in an underride collision (e.g. a collision in which the front of the vehicle "underrides", or goes under, the bed of a truck, etc.).

It is possible that in some collisions where the forward deceleration of the vehicle is very close to the designed threshold level, the SRS front airbags and the seat belt pretensioners may not activate together.

Always wear your seat belts properly.

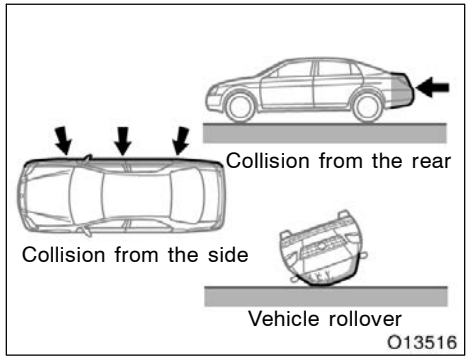


**The SRS front airbags are not generally designed to inflate if the vehicle is involved in a side or rear collision, if it rolls over, or if it is involved in a low–speed frontal collision. But, whenever a collision of any type causes sufficient forward deceleration of the vehicle, deployment of the SRS front airbags may occur.**

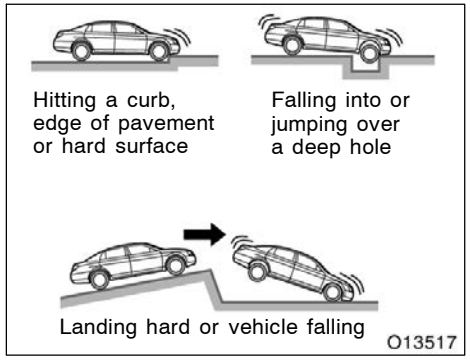


**The SRS front airbags may also deploy if a serious impact occurs to the underside of your vehicle. Some examples are shown in the illustration.**

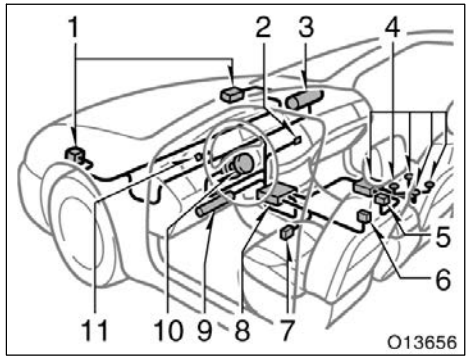


The SRS front airbag system consists mainly of the following components, and their locations are shown in the illustration.

1. Front airbag sensors
2. “AIRBAG ON” and “AIRBAG OFF” indicator lights
3. Airbag module for front passenger (airbag and inflator)
4. Front passenger occupant classification system (ECU and sensors)
5. Front passenger’s seat belt buckle switch
6. Driver’s seat belt buckle switch
7. Driver’s seat position sensor

8. Airbag sensor assembly
9. Knee airbag module for driver (airbag and inflator)
10. Airbag module for driver (airbag and inflator)
11. SRS warning light

The airbag sensor assembly consists of a safing sensor and airbag sensor.

The front airbag sensors constantly monitor the forward deceleration of the vehicle. If an impact results in a forward deceleration beyond the designed threshold level, the system triggers the airbag inflators. At this time a chemical reaction in the inflators very quickly fills the airbags with non–toxic gas to help restrain the forward motion of the occupants. The front airbags then quickly deflate, so that there is no obstruction of the driver's vision should it be necessary to continue driving.

When the airbags inflate, they produce a loud noise and release some smoke and residue along with non–toxic gas. This does not indicate a fire. This smoke may remain inside the vehicle for some time, and may cause some minor irritation to the eyes, skin or breathing. Be sure to wash off any residue as soon as possible to prevent any potential skin irritation with soap and water. If you can safely exit from the vehicle, you should do so immediately.

Deployment of the airbags happens in a fraction of a second, so the airbags must inflate with considerable force. While the system is designed to reduce serious injuries, primarily to the head and chest, it may also cause other, less severe injuries to the face, chest, arms and hands. These are usually in the nature of minor burns or abrasions and swelling, but the force of a deploying airbag can cause more serious injuries, especially if an occupant's hands, arms, chest or head is in close proximity to the airbag module at the time of deployment. This is why it is important for the occupant to; avoid placing any object or part of the body between the occupant and the airbag module; sit straight and well back into the seat; wear the available seat belt properly; and sit as far as possible from the airbag module, while still maintaining control of the vehicle.

Parts of the airbag module (steering wheel hub, lower portion of driver's side instrument panel, airbag cover and inflator) may be hot for several minutes after deployment, so do not touch! The airbags inflate only once. The windshield may be damaged by absorbing some of the force of the inflating airbag.

**⚠ CAUTION**

**The driver or front passenger who is too close to the steering wheel, lower portion of driver's side instrument panel or dashboard during airbag deployment can be killed or seriously injured. Toyota strongly recommends that:**

- **The driver sit as far back as possible from the steering wheel while still maintaining control of the vehicle.**
- **The front passenger sit as far back as possible from the dashboard.**
- **All vehicle occupants be properly restrained using the available seat belts.**

- **If the seat belt extender has been connected to the driver's seat belt buckle without wearing the seat belt when using the extender in the driver's seat, the SRS driver's airbag system will judge that the driver wears the seat belt even if not wearing it. In this case, the driver's airbag may not activate correctly, causing death or serious injury in the event of collision. Be sure to wear the seat belt with the seat belt extender.**

**For instructions and precautions concerning the seating position, see "—Front seat precautions" on page 56 in this Section.**

- **Do not sit on the edge of the seat or lean against the dashboard when the vehicle is in use, since the front passenger airbag could inflate with considerable speed and force. Anyone who is up against, or very close to, an airbag when it inflates, can be killed or seriously injured. Sit up straight and well back in the seat, and always use your seat belt properly.**

- **Toyota strongly recommends that all infants and children be placed in the rear seat of the vehicle and be properly restrained.**
- **Do not hold a child on your lap or in your arms. Use a child restraint system in the rear seat. For instructions concerning the installation of a child restraint system, see "Child restraint" on page 98 in this Section.**

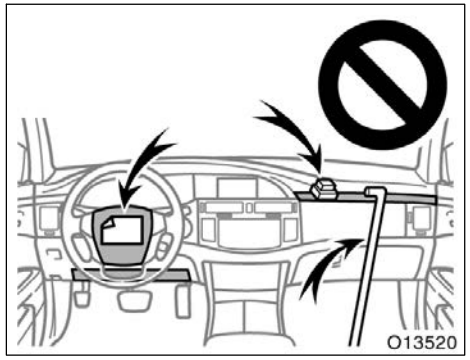


- **Do not put anything or any part of your body on or in front of the dashboard, lower portion of driver's side instrument panel or steering wheel pad that houses the front airbag system. They might restrict inflation or cause death or serious injury as they are projected rearward by the force of the deploying airbags. Likewise, the driver and front passenger should not hold objects in their arms or on their knees.**

- **If the vinyl cover is put on the area where the SRS knee airbag will deploy, be sure to remove it.**
- **Do not modify or remove any wiring. Do not modify, remove, strike or open any components, such as the steering wheel pad, steering wheel, column cover, dashboard near the front passenger airbag, front passenger airbag cover, front passenger airbag, driver knee airbag or airbag sensor assembly. Doing so may prevent the front airbag system from activating correctly, cause sudden activation of the system or disable the system, which could result in death or serious injury.**

**Failure to follow these instructions can result in death or serious injury. Consult your Toyota dealer about any repair and modification.**

**If you wish to modify your vehicle for a person with a physical disability, consult your Toyota dealer. It may dangerously interfere with the SRS front airbags operation.**

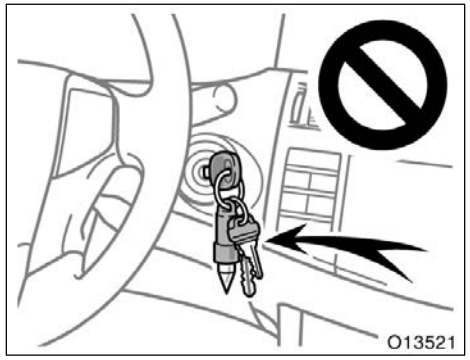


- **Vehicle with key cylinder−type ignition switch—Do not attach any heavy, sharp or hard objects such as keys or accessories to the ignition switch. The objects may restrict the SRS knee airbag inflation or be thrust into the driver's seat area by the force of the deploying airbag, thus causing a danger.**

***NOTICE***

***Do not perform any of the following changes without consulting your Toyota dealer. Such changes can interfere with proper operation of the SRS front airbag system in some cases.***

- ***Installation of electronic devices such as a mobile two−way radio, cassette tape player or compact disc player***
- ***Modification of the suspension system***
- ***Modification of the front end structure***
- ***Attachment of a grille guard (bull bar, kangaroo bar, etc.), snowplow, winches or any other equipment to the front end***
- ***Repairs made on or near the front fenders, front end structure, console, steering column, steering wheel, lower portion of driver's side instrument panel or dashboard near the front passenger airbag***

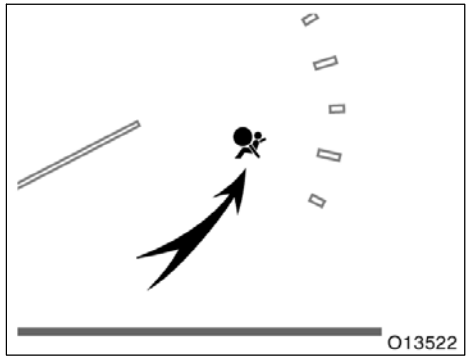


**This indicator comes on when the ignition switch is set at ON. It goes off after about 6 seconds. This means the SRS front airbags are operating properly.**

This warning light system monitors the airbag sensor assembly, front airbag sensors, side and curtain shield airbag sensors, curtain shield airbag sensors, driver's seat position sensor, driver's seat belt buckle switch, front passenger occupant classification system, "AIRBAG ON" indicator light, "AIRBAG OFF" indicator light, front passenger's seat belt buckle switch, seat belt pretensioner assemblies, inflators, interconnecting wiring and power sources. (For details, see "Service reminder indicators and warning buzzers" on page 145 in Section 1–6.)

If any of the following conditions occurs, this indicates a malfunction of the airbags or seat belt pretensioners. Contact your Toyota dealer as soon as possible.

- The light does not come on when the ignition switch is set at ON or remains on for more than 6 seconds.
- The light comes on while driving.

The SRS warning light and "AIRBAG OFF" indicator light will come on if there is a malfunction in the front passenger occupant classification system.

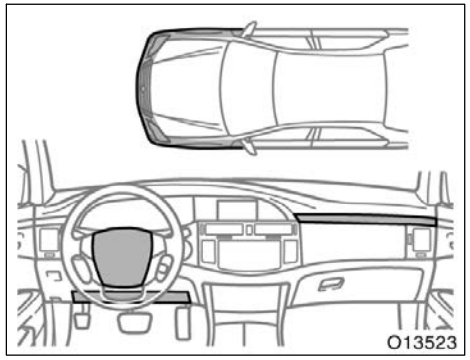


In the following cases, contact your Toyota dealer as soon as possible:

- The SRS front airbags have been inflated.
- The front of the vehicle (shaded in the illustration) was involved in an accident that was not severe enough to cause the SRS front airbags to inflate.
- The pad section of the steering wheel, lower portion of driver's side instrument panel or front passenger airbag cover (shaded in the illustration) is scratched, cracked, or otherwise damaged.

**NOTICE**

***Do not disconnect the battery cables before contacting your Toyota dealer.***

## —SRS side airbags and curtain shield airbags

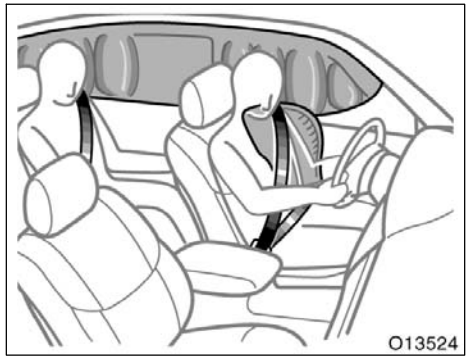


**The SRS (Supplemental Restraint System) side airbags and curtain shield airbags are designed to provide further protection for the driver, front passenger and rear outboard passengers in addition to the primary safety protection provided by the seat belts.**

In response to a severe side impact, the SRS side airbags and curtain shield airbags work with the seat belts to help reduce injury by inflating. The SRS side airbags help reduce injuries mainly to the driver's or front passenger's chest and the SRS curtain shield airbags help reduce injuries mainly to the driver's, front passenger's or rear outboard passenger's head.

The SRS side airbag on the passenger seat will not activate if there is no passenger sitting in the front passenger seat. However, the side airbag on the passenger seat may deploy if luggage is put in the seat, or the seat belt is buckled up, regardless of the presence of an occupant in the seat. (As for the front passenger occupant classification system, see "—Front passenger occupant classification system" on page 94 in this Section.)

The SRS curtain shield airbags may activate even when the side airbags are not activated.

Always wear your seat belt properly.

**⚠ CAUTION**

- **The SRS side airbag and curtain shield airbag system is designed only as a supplement to the primary protection of the driver, front passenger and rear outboard passenger seat belt systems. To ensure maximum protection in an accident, the driver and all passengers in the vehicle must wear their seat belts properly. Wearing a seat belt properly during an accident reduces the chances of death or serious injury or being thrown out of the vehicle. For instructions and precautions concerning the seat belt system, see "Seat belts" on page 68 in this Section.**

- **Do not allow anyone to lean his/her head or any part of his/her body against the door or the area of the seat, front pillar, rear pillar or roof side rail from which the SRS side airbag and curtain shield airbag deploy even if he/she is a child seated in the child restraint system. It is dangerous if the SRS side airbag and curtain shield airbag inflate, and the impact of the deploying airbags could cause death or serious injury to the occupant.**

- **Improperly seated and/or restrained infants and children can be killed or seriously injured by the deploying airbags. An infant or child who is too small to use a seat belt should be properly secured using a child restraint system. Toyota strongly recommends that all infants and children be placed in the rear seats of the vehicle and properly restrained. The rear seats are the safest for infants and children. For instructions concerning the installation of a child restraint system, see "Child restraint" on page 98 in this Section.**

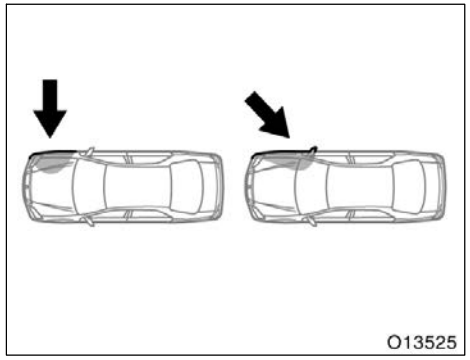


**The SRS side airbag and curtain shield airbag system may not activate if the vehicle is subjected to a collision from the side at certain angles, or a collision to the side of the vehicle body other than the passenger compartment as shown in the illustration.**

The SRS side airbags and curtain shield airbags are designed to inflate when the passenger compartment area suffers a severe impact from the side.

Always wear your seat belts properly.

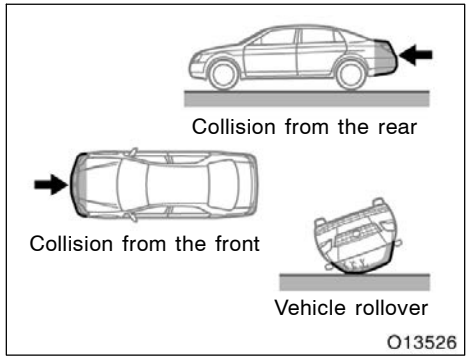


**The SRS side airbags and curtain shield airbags are not generally designed to inflate if the vehicle is involved in a front or rear collision, if it rolls over, or if it is involved in a low–speed side collision.**

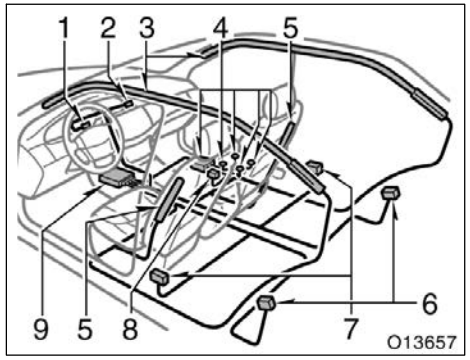


The SRS side airbag and curtain shield airbag system consists mainly of the following components, and their locations are shown in the illustration.

1. SRS warning light
2. “AIRBAG ON” and “AIRBAG OFF” indicator lights
3. Curtain shield airbag modules (airbag and inflator)
4. Front passenger occupant classification system (ECU and sensors)
5. Side airbag modules (airbag and inflator)
6. Curtain shield airbag sensors
7. Side and curtain shield airbag sensors
8. Front passenger’s seat belt buckle switch
9. Airbag sensor assembly

The SRS side airbag and curtain shield airbag system is controlled by the airbag sensor assembly. The airbag sensor assembly consists of a safing sensor and airbag sensor.

In a severe side impact, the side and curtain shield airbag sensor and/or the curtain shield airbag sensor trigger(s) the side airbag inflators and/or the curtain shield airbag inflators. At this time a chemical reaction in the inflators quickly fills the airbags with non–toxic gas to help restrain the lateral motion of the occupants.

When the airbags inflate, they produce a fairly loud noise and release some smoke and residue along with non–toxic gas. This does not indicate a fire. This smoke may remain inside the vehicle for some time, and may cause some minor irritation to the eyes, skin or breathing. Be sure to wash off any residue as soon as possible to prevent any potential skin irritation with soap and water. If you can safely exit from the vehicle, you should do so immediately.

Deployment of the airbags happens in a fraction of a second, so the airbags must inflate with considerable force. While the system is designed to reduce serious injuries, it may also cause minor burns or abrasions and swelling.

Front seats as well as parts of the front and rear pillars, and roof side rail may be hot for several minutes, but the airbags themselves will not be hot. The airbags are designed to inflate only once.

**⚠ CAUTION**

**SRS side airbags and curtain shield airbags inflate with considerable force. To reduce the possibility of death or serious injury when they inflate, the driver, front passenger and rear outboard passengers must:**

- **Wear their seat belts properly.**
- **Remain properly seated with their backs upright and against the seats at all times.**

- **Do not allow anyone to lean against the door when the vehicle is in use, since the side airbag and curtain shield airbag could inflate with considerable speed and force. Otherwise, he/she may be killed or seriously injured. Special care should be taken especially when you have a small child in the vehicle.**
- **Sit up straight and well back in the seat, distributing your weight evenly in the seat. Do not apply excessive weight to the outer side of the seats with a side airbag and to the front pillar, rear pillar and roof side rail with a curtain shield airbag.**

- **Do not allow anyone to get his/her head close to the area where the side airbag and curtain shield airbag inflate, since these airbags could inflate with considerable speed and force. Otherwise, he/she may be killed or seriously injured. Special care should be taken especially when you have a small child in the vehicle.**

- **Do not allow anyone to kneel on the passenger seat, facing the passenger's side door, since the side airbag and curtain shield airbag could inflate with considerable speed and force. Otherwise, he/she may be killed or seriously injured. Special care should be taken especially when you have a small child in the vehicle.**

- **Do not allow anyone to get his/her head or hands out of windows, since the curtain shield airbags could inflate with considerable speed and force. Otherwise, he/she may be killed or seriously injured. Special care should be taken especially when you have a small child in the vehicle.**

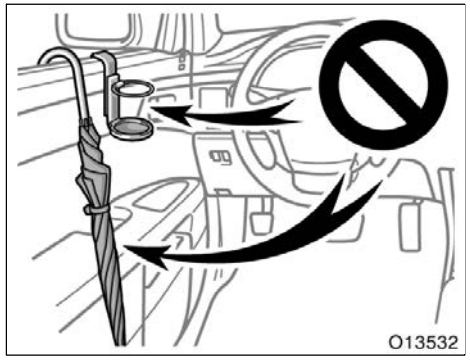


- **Do not attach a cup holder or any other device or object on or around the door. When the side airbag inflates, the cup holder or any other device or object will be thrown with great force, or the side airbag may not activate correctly, resulting in death or serious injury. Likewise, the driver and front passenger should not hold objects in their arms or on their knees.**

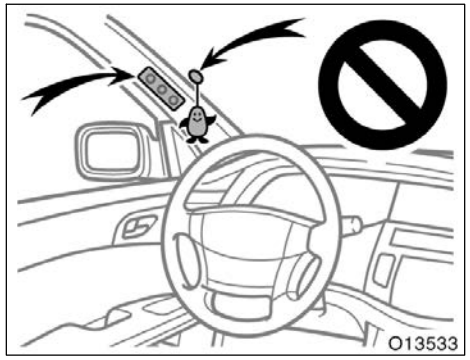


- **Do not attach a microphone or any other device or object around the area where the curtain shield airbag activates such as on the windshield glass, side door glass, front and rear pillars, roof side rail and assist grips. When the curtain shield airbag inflates, the microphone or other device or object will be thrown away with great force or the curtain shield airbag may not activate correctly, resulting in death or serious injury.**

- **Do not hook a hanger, heavy or sharp pointed objects on the coat hook. If the curtain shield airbag inflates, those items will be thrown away with great force or the curtain shield airbag may not activate correctly, resulting in death or serious injury. When you hang clothes, hang them on the coat hook directly.**
- **Do not use seat accessories which cover the parts where the side airbags inflate. Such accessories may prevent the side airbags from activating correctly, causing death or serious injury.**
- **Do not modify or replace the seats or upholstery of the seats with side airbags. Such changes may prevent the side airbag system from activating correctly, disable the system or cause the side airbags to inflate accidentally, resulting in death or serious injury.**

- **Do not disassemble or repair the front and rear pillars and roof side rail containing the curtain shield airbags. Such changes may disable the system or cause the curtain shield airbags to inflate accidentally, resulting in death or serious injury.**

**Failure to follow these instructions can result in death or serious injury. Consult your Toyota dealer about any repair and modification.**

**If you wish to modify your vehicle for a person with a physical disability, consult your Toyota dealer. It may dangerously interfere with the SRS side airbags and curtain shield airbags operation.**

**NOTICE**

***Do not perform any of the following changes without consulting your Toyota dealer. Such changes can interfere with proper operation of the SRS side airbag and curtain shield airbag system in some cases.***

- ***Installation of electronic devices such as a mobile two–way radio, cassette tape player or compact disc player***
- ***Modification of the suspension system***
- ***Modification of the side structure of the passenger compartment***
- ***Repairs made on or near the console or front seat***

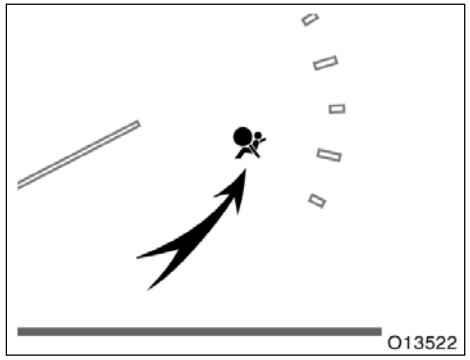


**This indicator comes on when the ignition switch is set at ON. It goes off after about 6 seconds. This means the SRS side airbags and curtain shield airbags are operating properly.**

This warning light system monitors the airbag sensor assembly, front airbag sensors, side and curtain shield airbag sensors, curtain shield airbag sensors, driver's seat position sensor, driver's seat belt buckle switch, front passenger occupant classification system, "AIRBAG ON" indicator light, "AIRBAG OFF" indicator light, front passenger's seat belt buckle switch, seat belt pretensioner assemblies, inflators, interconnecting wiring and power sources. (For details, see "Service reminder indicators and warning buzzers" on page 145 in Section 1–6.)

If any of the following conditions occurs, this indicates a malfunction of the airbags or seat belt pretensioners. Contact your Toyota dealer as soon as possible.

- The light does not come on when the ignition switch is set at ON or remains on for more than 6 seconds.
- The light comes on while driving.

The SRS warning light and "AIRBAG OFF" indicator light will come on if there is a malfunction in the front passenger occupant classification system.

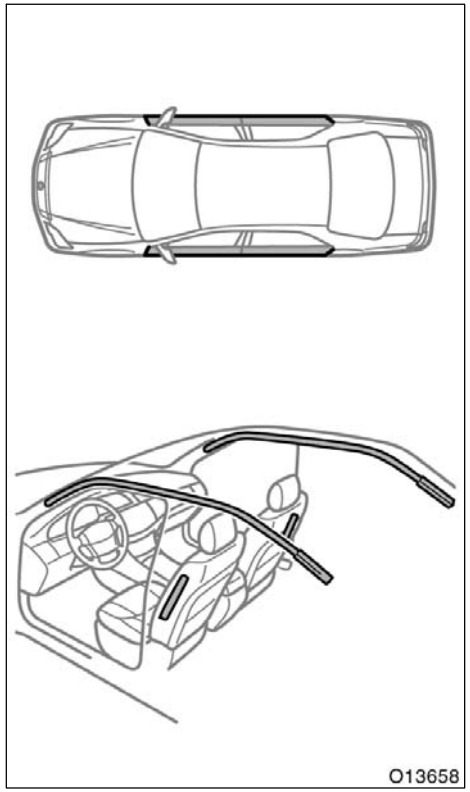


In the following cases, contact your Toyota dealer as soon as possible:

- Any of the SRS side airbags and curtain shield airbags have been inflated.
- The portion of the doors (shaded in the illustration) was involved in an accident that was not severe enough to cause the SRS side airbags and curtain shield airbags to inflate.
- The surface of the seats with the side airbag (shaded in the illustration) is scratched, cracked, or otherwise damaged.
- The portion of the front pillars, rear pillars or roof side rail garnishes (padding) containing the curtain shield airbags inside (shaded in the illustration) is scratched, cracked, or otherwise damaged.

**NOTICE**

***Do not disconnect the battery cables before contacting your Toyota dealer.***

## —Front passenger occupant classification system

**Your vehicle is equipped with a front passenger occupant classification system. This system detects the conditions 1—4 in the table on page 96 and based on these conditions activates or deactivates the following systems;**

- Front passenger airbag
- Side airbag on the front passenger seat
- Front passenger's seat belt pretensioner

**The system monitors the weight and load on the front passenger seat, and the seat belt buckle switch to determine conditions 1—4.**

**In order for the system to detect the conditions correctly, do not do any of the following:**

- Apply a heavy load to the front passenger seat or equipment (e.g. seatback pocket).
- Do not use a seat accessory, such as a cushion or seat cover, that covers the seat cushion surface.
- Put weight on the front passenger seat by putting your hands or feet on the seatback from the rear passenger seat.

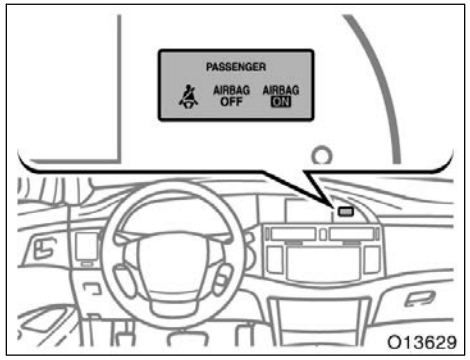


**The "AIRBAG ON" and "AIRBAG OFF" indicator lights indicate the actuation of the front passenger airbag, side airbag on the front passenger seat and front passenger's seat belt pretensioner.**

The "AIRBAG OFF" indicator light will be illuminated when the ignition switch is set at ON with the condition 2 in the table shown below.

If the front passenger occupant classification system determines that a person of adult size sits in the front passenger seat but the "AIRBAG OFF" indicator light is illuminated, one of the following is likely to have occurred:

- A rear passenger lifts the front passenger seat cushion with their legs.
- Objects are placed under the front passenger seat.
- The front passenger seatback is in contact with the rear seat.

To ensure the system correctly detects an adult sitting in the front passenger seat, make sure the above do not occur.

Make sure that the "AIRBAG ON" indicator light is illuminated when an adult is seated in the front passenger seat. If the "AIRBAG OFF" indicator light is illuminated, ask the passenger to sit up straight, well back in the seat, and with the seat belt worn correctly. If the "AIRBAG OFF" indicator light still remains illuminated, either ask the passenger to move to the rear seat, or if that is not possible, move the front passenger seat fully rearward.

**The "AIRBAG ON" and "AIRBAG OFF" indicator lights will be illuminated initially when the ignition switch is set at ON. After about 4 seconds, they will go off. After that, the front passenger occupant classification system operates and judges which indicator light be illuminated.**

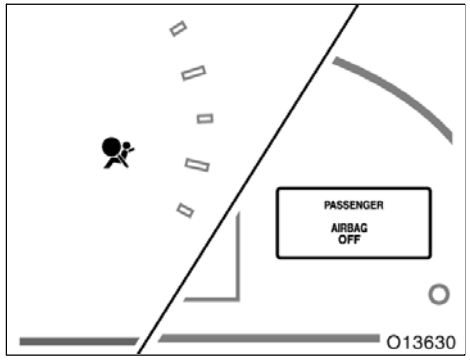


**The SRS warning light and "AIRBAG OFF" indicator light will come on if there is a malfunction in the front passenger occupant classification system.**

**Condition and operation in the front passenger occupant classification system**

| Condition detected by the front passenger occupant classification system | Indicator/warning light | | | Devices | | | |
|---|---|---|---|---|---|---|---|
| | "AIRBAG ON" and "AIRBAG OFF" indicator lights | SRS warning light | Front passenger's seat belt reminder light | Front passenger airbag | Side airbag on the front passenger seat | Curtain shield airbag in the front passenger side | Front passenger's seat belt pretensioner |
| 1. Adult*1 | "AIRBAG ON" | Off | Flashing*4 | Activated | | | |
| 2. Child*2 or child restraint system*3 | "AIRBAG OFF" | Off | Flashing*4 | Deactivated | | Activated | Activated |
| 3. Unoccupied | Not illuminated | Off | Off | Deactivated | | | Deactivated |
| 4. There is a malfunction in the system | "AIRBAG OFF" | On | Off | Deactivated | | | Activated |

*1: The system judges a person of adult size as an adult. When a smaller adult sits in the front passenger seat, the system may recognize him/her as a child depending on his/her physique and posture.

*2: When a larger child who has outgrown a child restraint system sits in the front passenger seat, the system may recognize him/her as an adult depending on his/her physique or posture.

*3: Never install a rear-facing child restraint system on the front passenger seat. A forward-facing child restraint system should only be installed on the front passenger seat when it is unavoidable. (See "Child restraint" on page 98 in this Section as for installing the child restraint system.)

*4: In the event that the front passenger does not wear a seat belt.

**⚠ CAUTION**

To avoid potential death or serious injury when the front passenger occupant classification system does not detect the conditions correctly, observe the following.

- Do not recline the front passenger seat seatback so that it interferes with a rear seat as it may cause the "AIRBAG OFF" indicator light be illuminated. If the seatback interferes with the rear seat, return the seatback to a position where it does not interfere with the rear seat.

  Keep the front passenger seatback as upright as possible when the vehicle is moving. Reclining the seatback excessively may lessen the effectiveness of the seat belt system.

- Make sure the "AIRBAG ON" indicator light is illuminated when using the seat belt extender for the front passenger seat. If the "AIRBAG OFF" indicator light is illuminated, disconnect the extender tongue from the seat belt buckle, then reconnect the seat belt. Reconnect the seat belt extender after making sure the "AIRBAG ON" indicator light is illuminated. If you use the seat belt extender while the "AIRBAG OFF" indicator light is illuminated, the front passenger airbag and side airbag on the front passenger side may not activate correctly, which could cause death or serious injury in the event of collision.

- If an adult sits in the front passenger seat, the "AIRBAG ON" indicator light should be illuminated. If the "AIRBAG OFF" indicator light is illuminated, ask the passenger to sit up straight, well back in the seat, feet on the floor, and with the seat belt worn correctly. If the "AIRBAG OFF" indicator light still remains illuminated, either ask the passenger to move to the rear seat, or if that is not possible, move the front passenger seat fully rearward.
- Wear the seat belt properly.
- Make sure the front passenger's seat belt tab has not been left inserted into the buckle before someone sits in the front passenger seat.
- Do not apply a heavy load to the front passenger seat or equipment (e.g. seatback pocket).

- **Do not put weight on the front passenger seat by putting your hands or feet on the front passenger seat seatback from the rear passenger seat.**
- **Do not let a rear passenger lift the front passenger seat with their feet or press on the seatback with their legs.**
- **Do not put objects under the front passenger seat.**
- **Child restraint systems installed on the rear seat should not contact the front seatbacks.**
- **When it is unavoidable to install the forward–facing child restraint system on the front passenger seat, install the child restraint system on the front passenger seat in the proper order. (As for the installation order, see "—Child restraint system" on page 100 in this Section.)**
- **Do not remove the seat.**

- **Do not kick the front passenger seat or subject it to severe impact. Otherwise, the SRS warning light may come on to indicate a malfunction of the detection system. In this case, contact your Toyota dealer immediately.**

The "AIRBAG ON" indicator light may be illuminated (the front passenger airbag and side airbag on the front passenger seat may deploy) even if observing the above cautions, when a child sits in, or a forward–facing child restraint system is installed on the front passenger seat. Refer to all the cautions in "SRS airbags" on page 79 and "Child restraint" described below.

## Child restraint—
## —Child restraint precautions

**Toyota strongly urges the use of appropriate child restraint systems for children.**

The laws of all 50 states in the U.S.A. and Canada now require the use of a child restraint system.

Your vehicle conforms to SAEJ1819.

If a child is too large for a child restraint system, the child should sit in the rear seat and must be restrained using the vehicle's seat belt. See "Seat belts" on page 68 in this Section for details.

**⚠ CAUTION**

- **For effective protection in automobile accidents and sudden stops, a child must be properly restrained, using a seat belt or child restraint system depending on the age and size of the child. Holding a child in your arms is not a substitute for a child restraint system. In an accident, the child can be crushed against the windshield, or between you and the vehicle's interior.**

- **Toyota strongly urges use of a proper child restraint system which conforms to the size of the child, installed on the rear seat. According to accident statistics, the child is safer when properly restrained in the rear seat than in the front seat.**
- **Never install a rear−facing child restraint system on the front passenger seat even if the "AIRBAG OFF" indicator light is illuminated. In the event of an accident, the force of the rapid inflation of the front passenger airbag can cause death or serious injury to the child if the rear−facing child restraint system is installed on the front passenger seat.**

- **A forward−facing child restraint system should be allowed to be installed on the front passenger seat only when it is unavoidable. Always move the seat as far back as possible even if the "AIRBAG OFF" indicator light is illuminated, because the front passenger airbag could inflate with considerable speed and force. Otherwise, the child may be killed or seriously injured.**
- **Do not allow the child to lean his/her head or any part of his/her body against the door or the area of the seat, front or rear pillar or roof side rail from which the side airbags or curtain shield airbags deploy even if the child is seated in the child restraint system. It is dangerous if the side airbag and/or curtain shield airbag inflate, and the impact could cause death or serious injury to the child.**

- **Do not use the seat belt extender when installing a child restraint system on the front or rear passenger seat. If installing a child restraint system with the seat belt extender connected to the seat belt, the seat belt will not securely hold the child restraint system, which could cause death or serious injury to the child or other passengers in the event of collision.**
- **Make sure you have complied with all installation instructions provided by the child restraint manufacturer and that the system is properly secured. If it is not secured properly, it may cause death or serious injury to the child in the event of a sudden stop or accident.**

## —Child restraint system

**A child restraint system for a small child or baby must itself be properly restrained on the seat with the lap portion of the lap/shoulder belt. You must carefully consult the manufacturer's instructions which accompany the child restraint system.**

To provide proper restraint, use a child restraint system following the manufacturer's instructions about the appropriate age and size of the child for the child restraint system.

Install the child restraint system correctly following the instructions provided by its manufacturer. General directions are also provided under the following instructions.

The child restraint system should be installed on the rear seat. According to accident statistics, the child is safer when properly restrained in the rear seat than in the front seat.

When not using the child restraint system, keep it secured with the seat belt or place it in the trunk or somewhere other than the passenger compartment. This will prevent it from injuring passengers in the event of a sudden stop or accident.

## —Types of child restraint system

Child restraint systems are classified into the following 3 types depending on the child's age and size.

(A) Infant seat
(B) Convertible seat
(C) Booster seat

Install the child restraint system following the instructions provided by its manufacturer.

Your vehicle has anchor brackets for securing the top strap of a child restraint system.

For instructions about how to use the anchor bracket, see "—Using a top strap" on page 112 in this Section.

The child restraint lower anchorages approved for your vehicle may also be used. See "—Installation with child restraint lower anchorages" on page 114 in this Section.

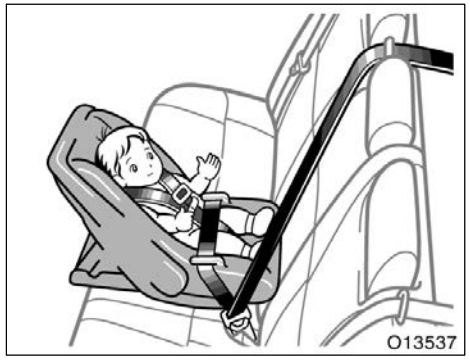


**(A) Infant seat**

**(B) Convertible seat**

## —Installation with seat belt

(C) Booster seat

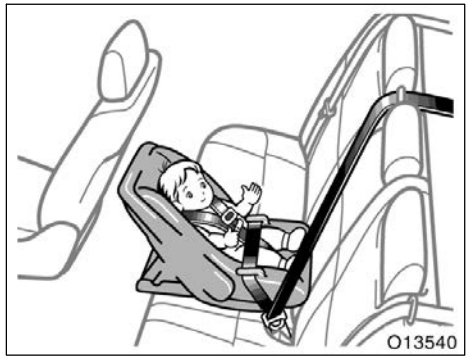


(A) INFANT SEAT INSTALLATION

An infant seat must be used in rear–facing position only.

**⚠ CAUTION**

- Never install a rear–facing child restraint system on the front passenger seat even if the “AIRBAG OFF” indicator light is illuminated. In the event of an accident, the impact of the rapid inflation of the front passenger airbag could cause death or serious injury to the child if the rear–facing child restraint system is installed on the front passenger seat.

- **Do not install a child restraint system on the rear seat if it interferes with the lock mechanism of the front seats. Otherwise, the child or front seat occupant(s) may be killed or seriously injured in case of sudden braking or a collision.**
- **If the driver's seat position does not allow sufficient space for safe installation, install the child restraint system on the rear right seat.**

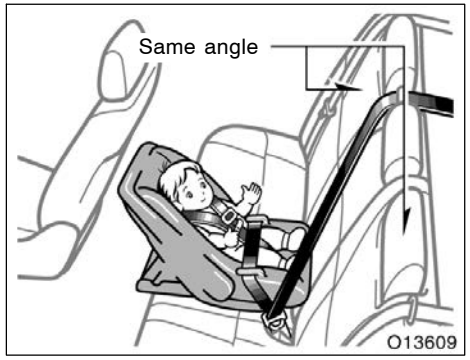


- **When installing a child restraint system in the rear center position, adjust both seatbacks to the same angle. Otherwise, the child restraint system cannot be securely restrained and this may cause death or serious injuries in a collision.**

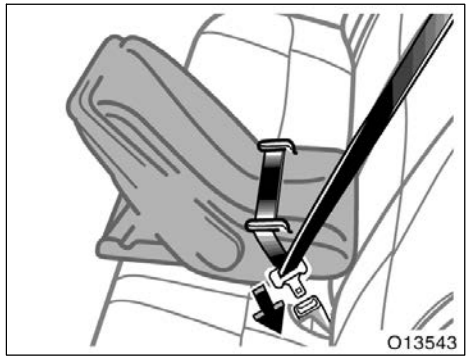


1. Run the lap and shoulder belt through or around the infant seat following the instructions provided by its manufacturer and insert the tab into the buckle taking care not to twist the belt. Keep the lap portion of the belt tight.

**⚠ CAUTION**

- **After inserting the tab, make sure the tab and buckle are locked and that the lap and shoulder portions of the belt are not twisted.**
- **Do not insert coins, clips, etc. in the buckle as this may prevent you from properly latching the tab and buckle.**
- **If the seat belt does not function normally, it cannot protect your child from death or serious injury. Contact your Toyota dealer immediately. Do not install the child restraint system on the seat until the seat belt is fixed.**

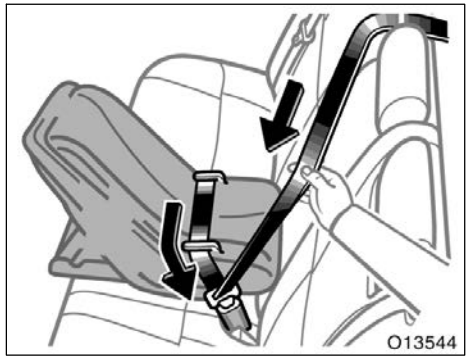


2. Fully extend the shoulder belt to put it in the lock mode. When the belt is then retracted even slightly, it cannot be extended.

To hold the infant seat securely, make sure the belt is in the lock mode before letting the belt retract.

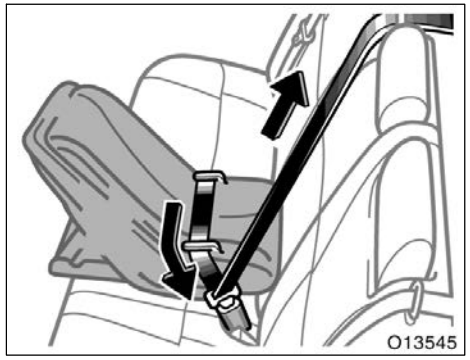


3. While pressing the infant seat firmly against the seat cushion and seatback, let the shoulder belt retract as far as it will go to hold the infant seat securely.

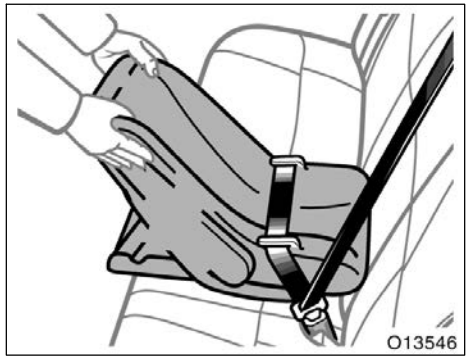


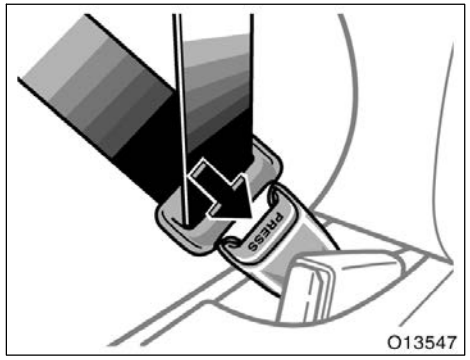


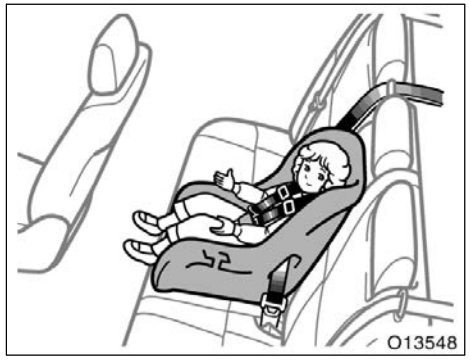


**⚠ CAUTION**

**Push and pull the child restraint system in different directions to be sure it is secure. Follow all the installation instructions provided by its manufacturer.**

4. To remove the infant seat, press the buckle release button and allow the belt to retract completely. The belt will move freely again and be ready to work for an adult or older child passenger.

**(B) CONVERTIBLE SEAT INSTALLATION**

**A convertible seat must be used in forward−facing or rear−facing position depending on the age and size of the child. When installing, follow the manufacturer's instructions about the appropriate age and size of the child as well as directions for installing the child restraint system.**

Install the child restraint system on the front passenger seat only when it is unavoidable. Your vehicle is equipped with a front passenger occupant classification system. In order to activate the occupant classification system correctly, install the forward–facing child restraint system on the front passenger seat in the following order:

1. Turn the ignition switch to ON.
2. Move the front passenger seat to the rearward position.
3. Put the child restraint system on the front passenger seat without putting your weight on the front passenger seat.
4. Insert the seat belt tab into the seat belt buckle.
5. Fully extend the shoulder belt to put it in the lock mode. When the belt is then retracted even slightly, it cannot be extended. To hold the seat securely, make sure the belt is in the lock mode before letting the belt retract.
6. While pressing the convertible seat firmly against the seat cushion and seatback, let the shoulder belt retract as far as it will go to hold the convertible seat securely.

**⚠ CAUTION**

**Push and pull the child restraint system in different directions to be sure it is secure. Follow all the installation instructions provided by its manufacturer.**

7. Put a child on the child restraint system and secure the child, complying with the instructions provided by the child restraint system manufacturer.

The “AIRBAG OFF” indicator light should be illuminated when the ignition switch is set at ON and the child is in the child restraint system after following these procedures. The “AIRBAG OFF” indicator light indicates the SRS front passenger airbag and side airbag on the passenger side will not deploy. If the “AIRBAG ON” indicator light is illuminated, remove the child restraint system and reinstall it with the engine off. If the “AIRBAG ON” indicator light is illuminated when the ignition switch is set to ON, then the SRS front passenger airbag and side airbag on the passenger side may deploy in an accident. Do not drive the vehicle in this condition. Remove the child restraint system and contact your Toyota dealer.

**⚠ CAUTION**

- **Never install a rear–facing child restraint system on the front passenger seat. A forward–facing child restraint system should only be installed on the front passenger seat when unavoidable. If you must install the child restraint system on the front passenger seat, put the seat in its most rearward position, and install the forward–facing child restraint system in the proper order. Otherwise, the front passenger occupant classification system can not detect the presence of the child restraint system and the front passenger airbag and side airbag on the front passenger seat could deploy, and the impact could cause death or serious injury to the child.**

- **Do not allow the child to lean his/her head or any part of his/her body against the door or the area of the seat, front or rear pillar or roof side rail from which the side airbags or curtain shield airbags deploy even if the child is seated in the child restraint system. It is dangerous if the side airbag and curtain shield airbag inflate, and the impact could cause death or serious injury to the child.**

- **Never install a rear−facing child restraint system on the front passenger seat even if the "AIRBAG OFF" indicator light is illuminated. In the event of an accident, the impact of the rapid inflation of the front passenger airbag could cause death or serious injury to the child if the rear−facing child restraint system is installed on the front passenger seat.**

- **A forward−facing child restraint system should be allowed to be installed on the front passenger seat only when it is unavoidable. Always move the seat as far back as possible even if the "AIRBAG OFF" indicator light is illuminated, because the front passenger airbag could inflate with considerable speed and force. Otherwise, the child may be killed or seriously injured.**

- **Do not install a child restraint system on the rear seat if it interferes with the lock mechanism of the front seats. Otherwise, the child or front seat occupant(s) may be killed or seriously injured in case of sudden braking or a collision.**
- **If the driver's seat position does not allow sufficient space for safe installation, install the child restraint system on the rear right seat.**

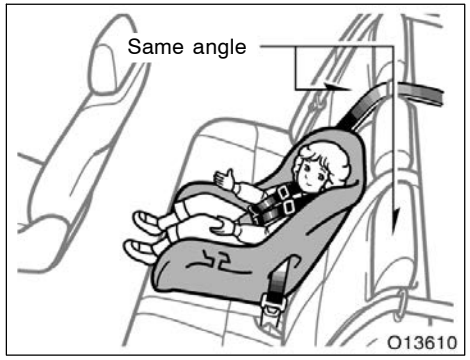


- **When installing a child restraint system in the rear center position, adjust both seatbacks to the same angle. Otherwise, the child restraint system cannot be securely restrained and this may cause death or serious injuries in a collision.**

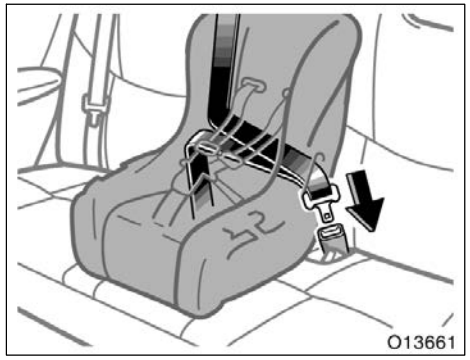


1. Run the lap and shoulder belt through or around the convertible seat following the instructions provided by its manufacturer and insert the tab into the buckle taking care not to twist the belt. Keep the lap portion of the belt tight.

**⚠ CAUTION**

- **After inserting the tab, make sure the tab and buckle are locked and that the lap and shoulder portions of the belt are not twisted.**
- **Do not insert coins, clips, etc. in the buckle as this may prevent you from properly latching the tab and buckle.**
- **If the seat belt does not function normally, it cannot protect your child from death or serious injury. Contact your Toyota dealer immediately. Do not install the child restraint system on the seat until the seat belt is fixed.**

2. Fully extend the shoulder belt to put it in the lock mode. When the belt is then retracted even slightly, it cannot be extended.

To hold the convertible seat securely, make sure the belt is in the lock mode before letting the belt retract.

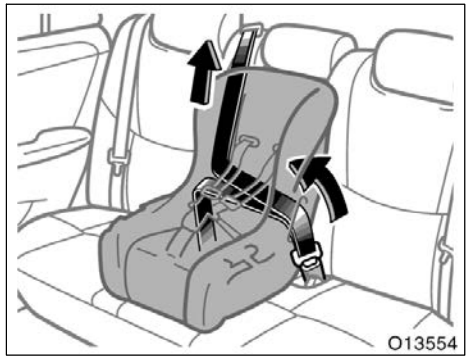


3. While pressing the convertible seat firmly against the seat cushion and seatback, let the shoulder belt retract as far as it will go to hold the convertible seat securely.

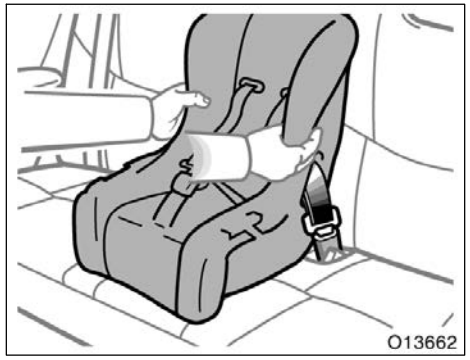


**⚠ CAUTION**

**Push and pull the child restraint system in different directions to be sure it is secure. Follow all the installation instructions provided by its manufacturer.**

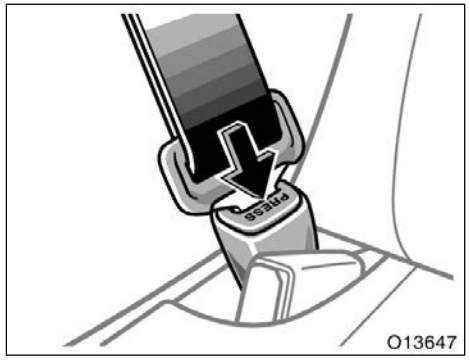


4. To remove the convertible seat, press the buckle release button and allow the belt to retract completely. The belt will move freely again and be ready to work for an adult or older child passenger.

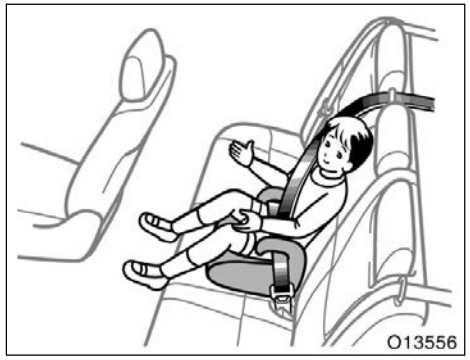


**(C) BOOSTER SEAT INSTALLATION**

**A booster seat must be used in forward−facing position only.**

**CAUTION**

- **A forward–facing child restraint system should be allowed to be installed on the front passenger seat only when it is unavoidable. Always move the seat as far back as possible even if the "AIRBAG OFF" indicator light is illuminated, because the front passenger airbag could inflate with considerable speed and force. Otherwise, the child may be killed or seriously injured.**

- **Do not allow the child to lean his/her head or any part of his/her body against the door or the area of the seat, front or rear pillar or roof side rail from which the side airbags or curtain shield airbags deploy even if the child is seated in the child restraint system. It is dangerous if the side airbag and curtain shield airbag inflate, and the impact could cause death or serious injury to the child.**

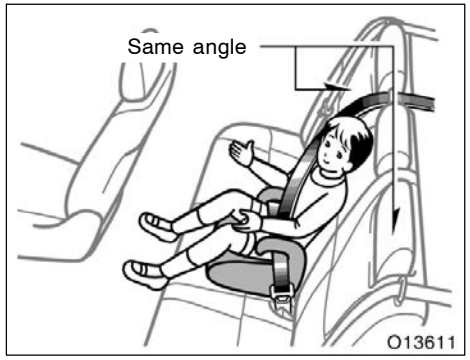


- **When installing a child restraint system in the rear center position, adjust both seatbacks to the same angle. Otherwise, the child restraint system cannot be securely restrained and this may cause death or serious injuries in a collision.**

1. Sit the child on a booster seat. Run the lap and shoulder belt through or around the booster seat and across the child following the instructions provided by its manufacturer and insert the tab into the buckle taking care not to twist the belt.

Make sure the shoulder belt is correctly across the child's shoulder and that the lap belt is positioned as low as possible on the child's hips. See "Seat belts" on page 68 in this Section for details.

**⚠ CAUTION**

- **Always make sure the shoulder belt is positioned across the center of child's shoulder. The belt should be kept away from child's neck, but not falling off child's shoulder. Otherwise, the child may be killed or seriously injured in case of sudden braking or a collision.**
- **Both high–positioned lap belts and loose–fitting belts could cause death or serious injuries due to sliding under the lap belt during a collision or other unintended event. Keep the lap belt position as low on a child's hips as possible.**
- **For child's safety, do not place the shoulder belt under child's arm.**
- **After inserting the tab, make sure the tab and buckle are locked and that the lap and shoulder portions of the belt are not twisted.**
- **Do not insert coins, clips, etc. in the buckle as this may prevent you from properly latching the tab and buckle.**

- **If the seat belt does not function normally, it cannot protect your child from death or serious injury. Contact your Toyota dealer immediately. Do not install the child restraint system on the seat until the seat belt is fixed.**

## —Using a top strap

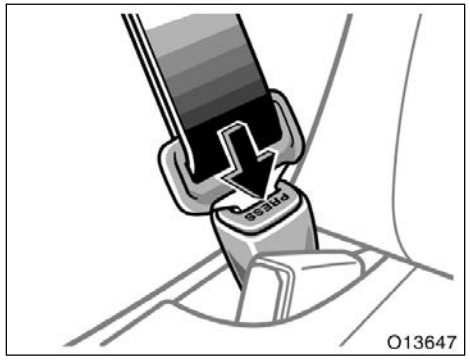


2. To remove the booster seat, press the buckle release button and allow the belt to retract.

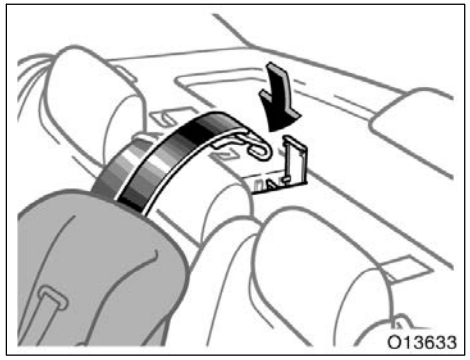


**Follow the procedure below for a child restraint system that requires the use of a top strap.**

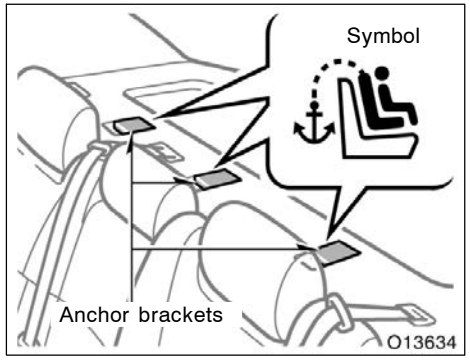


Use the anchor bracket on the package tray behind the rear seat to attach the top strap.

Anchor brackets are installed for each rear seating position.

This symbol indicates the locations of the anchor brackets.

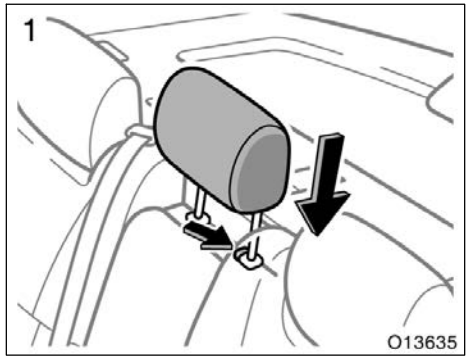


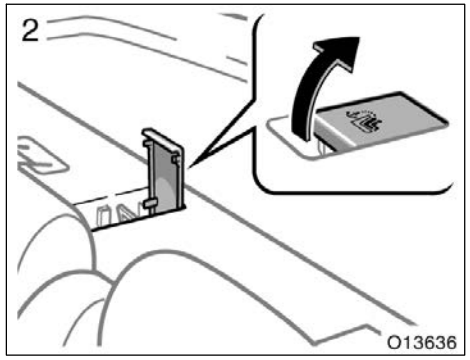


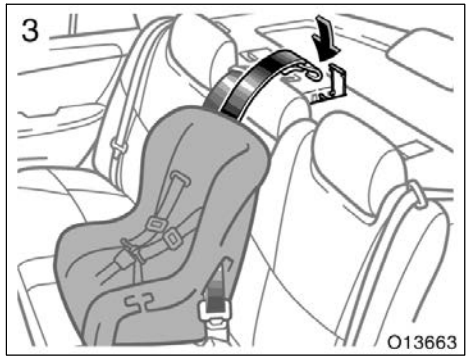


**TO USE THE ANCHOR BRACKET:**

**1. Lower the head restraint.**

**2. Open the lid of the anchor bracket.**

**3. Securely fasten the child restraint system with the seat belt.**

**Latch the hook onto the anchor bracket and tighten the top strap.**

For instructions to install the child restraint system, see “Child restraint” on page 98 in this Section.

**CAUTION**

- **Do not adjust the head restraint or the seat after securing the child restraint system.**
- **Make sure the top strap is securely latched, and check that the child restraint system is secure by pushing and pulling it in different directions.**

**Follow all the installation instructions provided by its manufacturer.**

### —Installation with child restraint lower anchorages

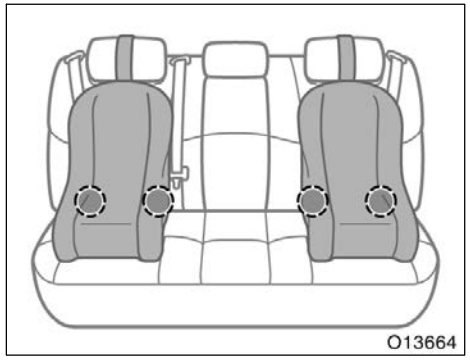


**Lower anchorages for the child restraint systems complying with the FMVSS225 or CMVSS210.2 specifications are installed in the rear seat.**

The anchorages are installed in the gap between the seat cushion and seatback of both outboard rear seats.

Child restraint systems complying with the FMVSS213 or CMVSS213 specification can be fixed to these anchorages. In this case, it is not necessary to fix the child restraint system with a seat belt on the vehicle.

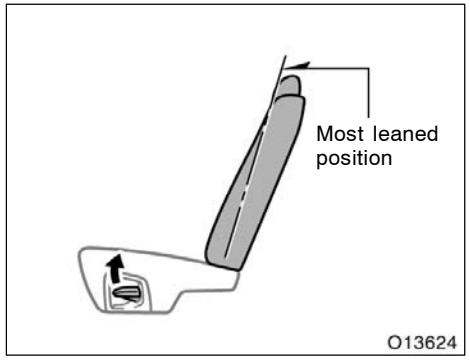


**CHILD RESTRAINT SYSTEM INSTALLATION**

1. **Adjust the seatback to the most leaned position.**

Make sure the seatback is locked securely.

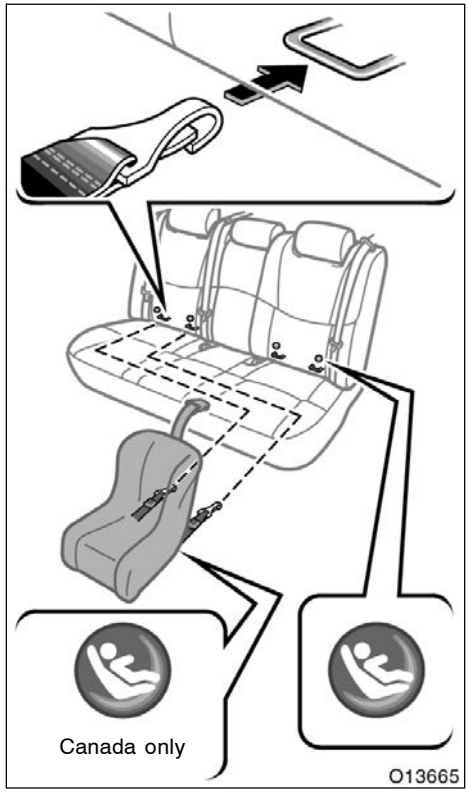


**Type A**

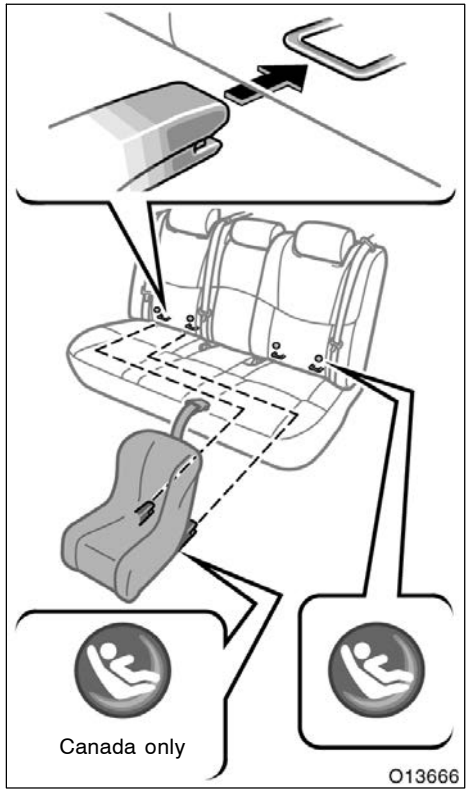


**Type B**

2. **Widen the gap between the seat cushion and seatback slightly and confirm the position of the lower anchorages near the buttons on the seatback.**
3. **Type A—Latch the hooks of lower straps onto the anchorages and tighten the lower straps.**

   **Type B—Latch the buckles onto the anchorages.**

**For owners in Canada**

The symbol on a child restraint system indicates the presence of a lower connector system.

If your child restraint system has a top strap, it should be anchored. (For the installation of the top strap, see "—Using a top strap" on page 112 in this Section.)

For installation details, refer to the instruction manual equipped with each product.

**⚠ CAUTION**

- **When using the lower anchorages for the child restraint system, be sure that there are no irregular objects around the anchorages or that the seat belt is not caught.**
- **Push and pull the child restraint system in different directions to be sure it is secure. Follow all the installation instructions provided by its manufacturer.**
- **After securing the child restraint system, never recline the seat.**
- **Do not install a child restraint system on the rear seat if it interferes with the lock mechanism of the front seats. Otherwise, the child or front seat occupant(s) may be killed or seriously injured in case of sudden braking or a collision.**

# SECTION 1–4

## OPERATION OF INSTRUMENTS AND CONTROLS

### Steering wheel and Mirrors

Tilt and telescopic steering wheel . . . . . 118
Outside rear view mirrors . . . . . 119
Anti–glare inside rear view mirror . . . . . 120
Auto anti–glare inside rear view mirror . . . . . 121
Sun visors . . . . . 122

## Tilt and telescopic steering wheel

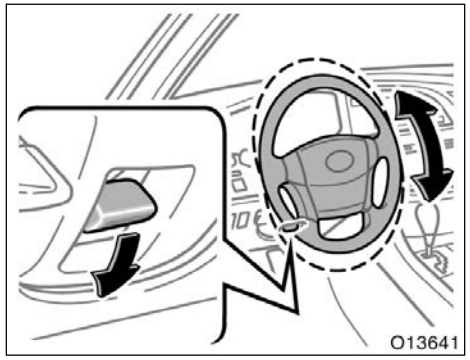


### TILT STEERING WHEEL

**To change the steering wheel angle, hold the steering wheel, push down the tilt lock release lever, tilt the steering wheel to the desired angle and release the lever.**

When the steering wheel is in a low position, it will spring up as you release the lock release lever.

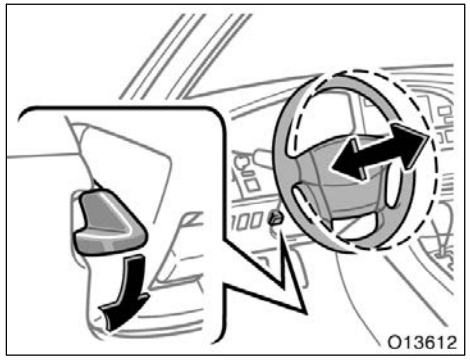


### TELESCOPIC STEERING WHEEL

**To change the steering wheel column length, hold the steering wheel, push down the telescopic lock release lever, push or pull the steering wheel to the desired length and return the lever to its original position.**

**⚠ CAUTION**

- **Do not adjust the steering wheel while the vehicle is moving. Doing so may cause the driver to mishandle the vehicle and an accident may occur resulting in death or serious injuries.**
- **After adjusting the steering wheel, try moving it up and down or forward and rearward to make sure it is locked in position.**

## Outside rear view mirrors—

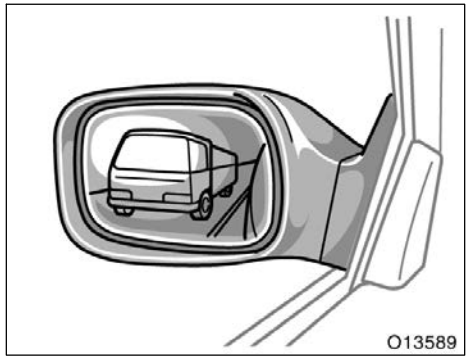


**Adjust the mirror so that you can just see the side of your vehicle in the mirror.**

Be careful when judging the size or distance of any object seen in the outside rear view mirror on the passenger's side because it is a convex mirror. Any object seen in a convex mirror will look smaller and farther away than when seen in a flat mirror.

Vehicles with the auto anti–glare inside rear view mirror—

When the inside rear view mirror surface darkens in automatic mode, the driver's side and front passenger's side (on some models) outside rear view mirror surface also darkens to reduce the reflection of the headlights of the vehicle behind you. (For details, see "Auto anti–glare inside rear view mirror" on page 121 in this Section.)

When you push the rear window defogger switch, the heater panels in the outside rear view mirrors will quickly clear the surface. (See "Rear window and outside rear view mirror defoggers" on page 140 in Section 1–5.)

**⚠ CAUTION**

- **Do not adjust the mirror while the vehicle is moving. Doing so may cause the driver to mishandle the vehicle and an accident may occur resulting in death or serious injuries.**
- **On some models, since the mirror surfaces can get hot, do not touch them when the defogger switch is on.**

***NOTICE***

***The outside rear view mirrors are fixed in place. Do not try to fold the mirrors. It may damage the mirrors.***

## —Power rear view mirror control

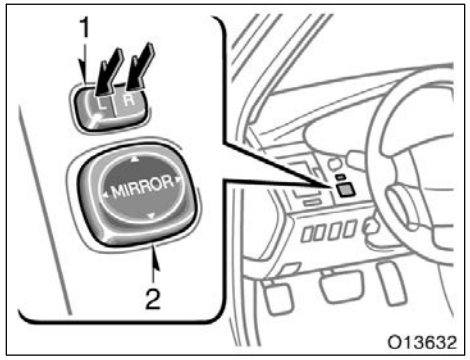


**To adjust a mirror, use the switches.**

1. Master switch—To select the mirror to be adjusted
   Push the switch at “L” (left) or “R” (right).
2. Control switch—To move the mirror
   Push the switch in the desired direction.

The mirrors can be adjusted when the ignition switch is set at the ACC or ON.

Vehicles with the driving position memory system—The position of the outside rear view mirrors and driver’s seat can be memorized. For details, see “Driving position memory system” on page 60 in Section 1–3.

**NOTICE**

***If ice should jam the mirror, do not operate the control or scrape the mirror face. Use a spray de–icer to free the mirror.***

## Anti–glare inside rear view mirror

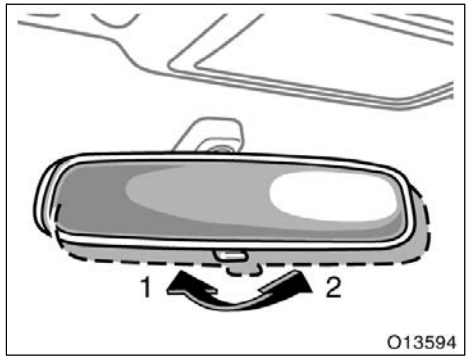


**Adjust the mirror so that you can just see the rear of your vehicle in the mirror.**

**To reduce glare from the headlights of the vehicle behind you during night driving, operate the lever on the lower edge of the mirror.**

Daylight driving—Lever at position 1

The reflection in the mirror has greater clarity at this position.

Night driving—Lever at position 2

Remember that by reducing glare you also lose some rear view clarity.

**⚠ CAUTION**

**Do not adjust the mirror while the vehicle is moving. Doing so may cause the driver to mishandle the vehicle and an accident may occur resulting in death or serious injuries.**

## Auto anti–glare inside rear view mirror

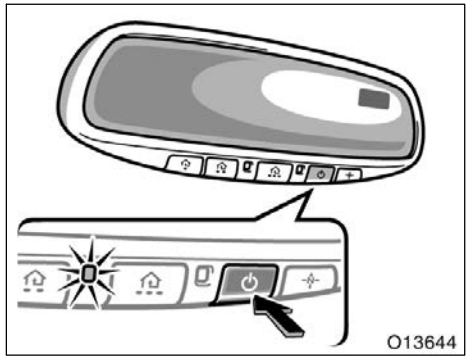


**Adjust the mirror so that you can just see the rear of your vehicle in the mirror.**

**This mirror is equipped with auto anti–glare function. The function is designed to reduce glare from the headlights of the vehicle behind you during night driving.**

When the ignition switch is set to ON, the inside rear view mirror always turns on in the automatic function mode.

The indicator illuminates to show you that the function is on.

In automatic function mode, if the mirror detects light from the headlights of the vehicle behind you, the mirror surface darkens slightly to reduce the reflected light.

To turn off the automatic function, press the "⏻" switch.

To turn on the automatic function again, press the "⏻" switch.

Adjust it before driving so that the rear view is optimized.

When the inside air temperature is low, it may take a little longer for the mirror to darken in response to the detection of headlights.

**⚠ CAUTION**

**Do not adjust the mirror while the vehicle is moving. Doing so may cause the driver to mishandle the vehicle and an accident may occur resulting in death or serious injuries.**

## Sun visors—

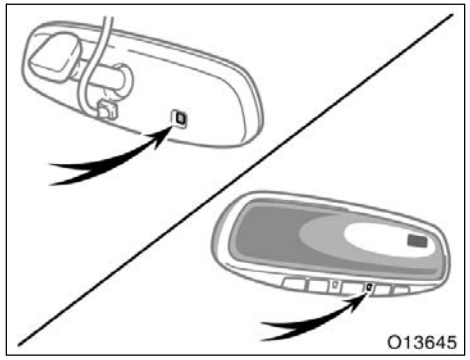


**To ensure correct functioning of anti–glare mirror sensors located on both sides of the mirror, do not touch or cover the sensors with your finger or a piece of cloth, etc.**

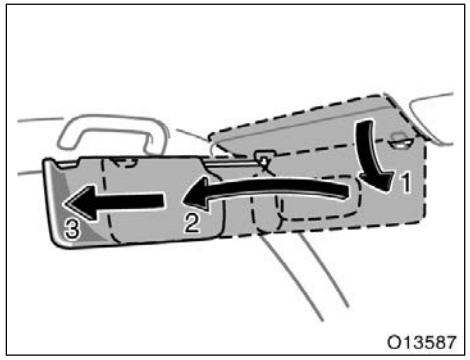


**To block out glare, move the sun visor.**

To block out glare from the front—Swing down the sun visor (position 1).

To block out glare from the side—Swing down the sun visor, remove it from the hook and swing it to the lateral side (position 2).

If glare comes from obliquely behind you, slide the sun visor backward (to position 3).

**⚠ CAUTION**

**Do not slide the sun visor when the visor is in the position 1. It can cover the anti–glare inside rear view mirror and obstruct the rear view.**

## —Vanity mirrors

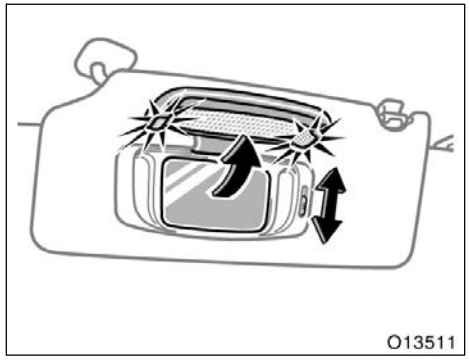


**To use the vanity mirrors, swing down the sun visor and open the cover.**

The vanity lights come on when you open the cover.

To adjust the brightness of the lights, slide the switch.

# SECTION 1 – 5

## OPERATION OF INSTRUMENTS AND CONTROLS

### Lights, Wipers and Defogger


Headlights and turn signals . . . . . 126
Emergency flashers . . . . . 132
Instrument panel light control . . . . . 133
Front fog lights . . . . . 133
Interior light . . . . . 133
Front personal lights . . . . . 134
Rear personal lights . . . . . 134
Illuminated entry system . . . . . 135
Windshield wipers and washer . . . . . 136
Rear window and outside rear view mirror defoggers . . . . . 140

## Headlights and turn signals (for U.S.A.)

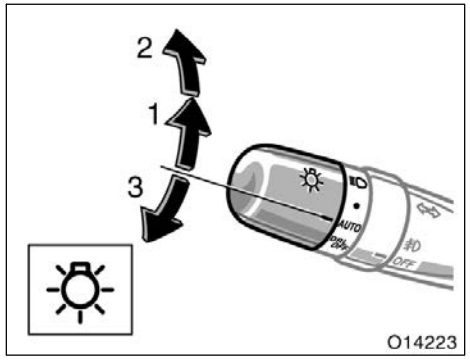


**HEADLIGHTS**

**Manual operation—**

**To turn on the following lights: Twist the headlight/turn signal lever knob.**

Position 1—Parking, side marker, tail, license plate and instrument panel lights

Position 2—Headlights and all of the above

The headlight indicator lights up in the instrument cluster.

**Automatic operation—**

**To turn on or off the lights automatically, twist the headlight/turn signal lever knob to the "AUTO" position when the ignition switch is set at ON.**

The headlights and/or all of the lights in position 1 automatically turn on or off depending on the darkness of the surroundings.

Manually twist the knob to the position 2 to turn on the headlights if they are needed immediately when entering a dark tunnel, parking structure, etc.

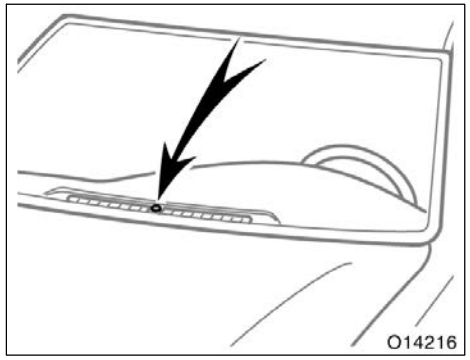


The automatic light control sensor is on the top of the center instrument panel.

Do not place anything on the instrument panel, and/or do not affix anything on the windshield to block this sensor.

If you feel that the automatic light control comes into operation too early or too late, have the sensor adjusted by your Toyota dealer.

**Automatic light cut off system**

**Position 1 or "AUTO" position with the tail lights on—**

The lights automatically turn off when the driver's door is opened with the engine off.

**Position 2 or "AUTO" position with the headlights on—**

The lights automatically turn off after 30 seconds when any of the doors or trunk lid is opened and closed with the engine off.

The lights can be turned off immediately by pushing the lock switch on the wireless remote control transmitter with all the doors locked and the trunk lid closed.

If any of the doors or trunk lid is kept open, the lights automatically turn off after 20 minutes.

To turn on the lights again, turn the ignition switch is set at ON or actuate the headlight switch. If you are going to park for over one week, make sure the headlight switch is off.

**NOTICE**

***To prevent the battery from being discharged, do not leave the lights on for a long period when the engine is not running.***

**Daytime Running Light (DRL) system**

The Daytime Running Light (DRL) system can make it easier for others to see the front of your vehicle during the day. The DRL system can be helpful in many different driving conditions, but they can be especially helpful in the short periods after dawn and before sunset.

The DRL system will make your headlights come on at a reduced brightness when:

- The engine is running.
- The light switch is in the "AUTO" position.
- The parking brake is released.

To turn on the other exterior lights and instrument panel lights, twist the knob to position 1.

Twist the knob to position 2 to turn the headlights to full intensity for night driving.

To turn off the DRL system, twist the knob to the position 3 ("DRL OFF") or turn the ignition switch off.

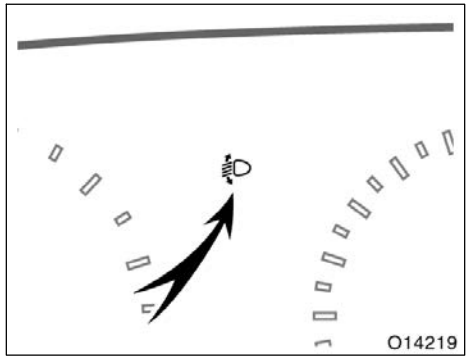


**Automatic headlight leveling system (with discharge headlights)**

Vehicle position changes according to loading condition, passengers getting on and off, vehicle acceleration and deceleration, etc. However, the headlight beam level is always maintained automatically by the system at the proper level so that your headlights do not dazzle other road users.

The warning light will come on when the ignition switch is set at ON and will go off after a few second.

If this system fails, the warning light in the instrument panel comes on. If this occurs, have your vehicle checked by your Toyota dealer.

If you replace the rear suspension and/or the vehicle height changes, contact your Toyota dealer to check the automatic headlight leveling system and headlight beam level.

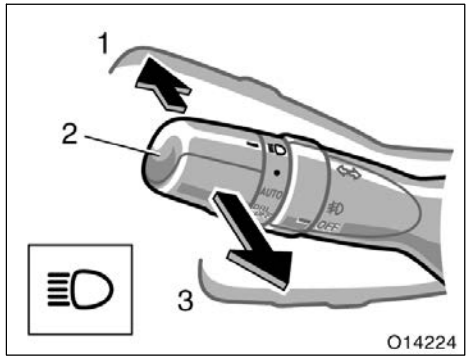


**High−Low beams—**For high beams, turn the headlights on and push the lever away from you (position 1). Pull the lever toward you (position 2) for low beams.

The headlight high beam indicator light (blue light) on the instrument panel will tell you that the high beams are on.

**Flashing the high beam headlights** (position 3)—Pull the lever all the way back. The high beam headlights turn off when you release the lever.

You can flash the high beam headlights even when the headlight switch is off.

## Headlights and turn signals (for Canada)

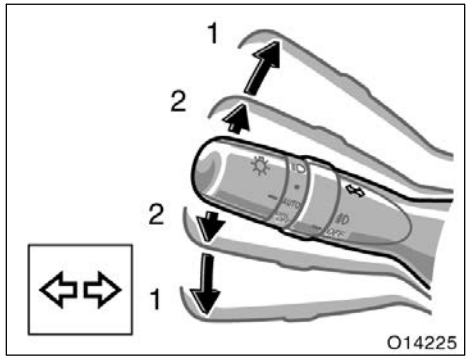


**TURN SIGNALS**

**To signal a turn, push the headlight/turn signal lever up or down to position 1.**

The ignition switch must be set at ON.

The lever automatically returns after you make a turn, but you may have to return it by hand after you change lanes.

To signal a lane change, move the lever up or down to the pressure point (position 2) and hold it.

If the turn signal indicator lights (green lights) on the instrument panel flash faster than normal, a front or rear turn signal bulb is burned out. See “Replacing light bulbs” on page 377 in Section 7–3.

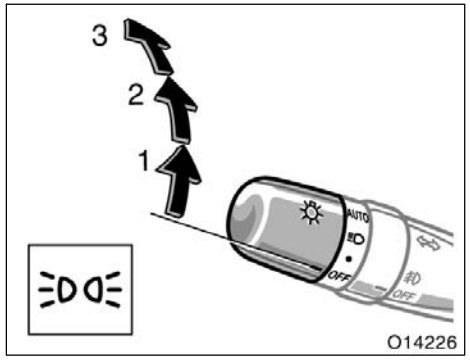


**HEADLIGHTS**

**Manual operation—**

**To turn on the following lights: Twist the headlight/turn signal lever knob.**

Position 1—Parking, side marker, tail, license plate and instrument panel lights

The tail light indicator lights up in the instrument cluster.

Position 2—Headlights and all of the above

**Automatic operation—**

**To turn on or off the lights automatically, twist the headlight/turn signal lever knob to the position 3 (“AUTO”) when the ignition switch is set at ON.**

The headlights and/or all of the lights in position 1 automatically turn on or off depending on the darkness of the surroundings.

Manually twist the knob to the position 2 to turn on the headlights if they are needed immediately when entering a dark tunnel, parking structure, etc.

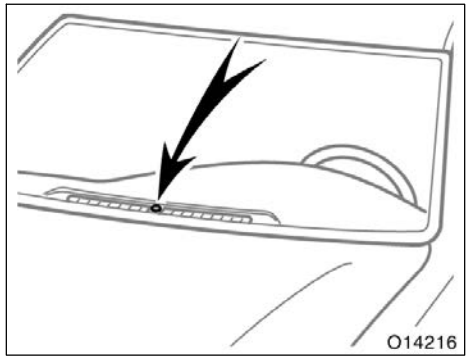


The automatic light control sensor is on the top of the center instrument panel.

Do not place anything on the instrument panel, and/or do not affix anything on the windshield to block this sensor.

If you feel that the automatic light control comes into operation too early or too late, have the sensor adjusted by your Toyota dealer.

**Automatic light cut off system**

**Position 1 or position 3 with the tail lights on—**

The lights automatically turn off when the driver's door is opened with the engine off.

**Position 2 or position 3 with the headlights on—**

The lights automatically turn off after 30 seconds when any of the door or trunk lid is opened and closed with the engine off.

The lights can be turned off immediately by pushing the lock switch on the wireless remote control transmitter with all the doors locked and the trunk lid closed.

If any of the door or trunk lid is kept opened, the lights automatically turn off after 20 minutes.

To turn on the lights again, turn the ignition switch is set at ON or actuate the headlight switch. If you are going to park for over one week, make sure the headlight switch is off.

**NOTICE**

***To prevent the battery from being discharged, do not leave the lights on for a long period when the engine is not running.***

**Daytime Running Light (DRL) system**

The headlights turn on when the parking brake is released with the engine started, even with the light switch in the "OFF" position. They will not go off until the ignition switch is turned off.

To turn on the other exterior lights and instrument panel lights, twist the knob to position 1.

Twist the knob to the position 2 to turn the headlights to full intensity for night driving.

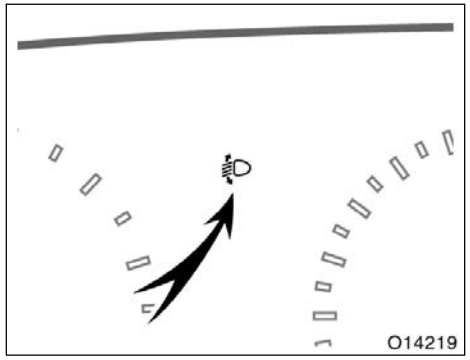


**Automatic headlight leveling system (with discharge headlights)**

Vehicle position changes according to loading condition, passengers getting on and off, vehicle acceleration and deceleration, etc. However, the headlight beam level is always maintained automatically by the system at the proper level so that your headlights do not dazzle other road users.

The warning light will come on when the ignition switch is set at ON and will go off after a few second.

If this system fails, the warning light in the instrument panel comes on. If this occurs, have your vehicle checked by your Toyota dealer.

If you replace the rear suspension and/or the vehicle height changes, contact your Toyota dealer to check the automatic headlight leveling system and headlight beam level.

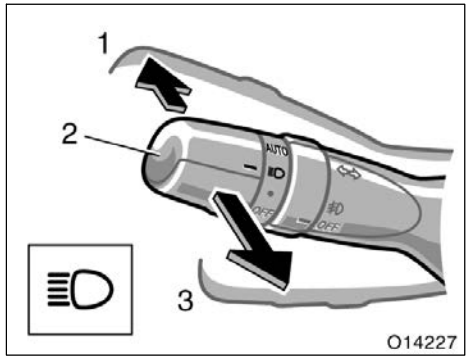


**High−Low beams—**For high beams, turn the headlights on and push the lever away from you (position 1). Pull the lever toward you (position 2) for low beams.

The headlight high beam indicator light (blue light) on the instrument panel will tell you that the high beams are on.

**Flashing the high beam headlights** (position 3)—Pull the lever all the way back. The high beam headlights turn off when you release the lever.

You can flash the high beam headlights even when the headlight switch is off.

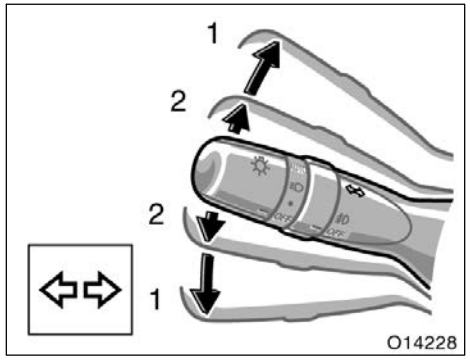


**TURN SIGNALS**

**To signal a turn, push the headlight/ turn signal lever up or down to position 1.**

The ignition switch must be set at ON.

The lever automatically returns after you make a turn, but you may have to return it by hand after you change lanes.

To signal a lane change, move the lever up or down to the pressure point (position 2) and hold it.

If the turn signal indicator lights (green lights) on the instrument panel flash faster than normal, a front or rear turn signal bulb is burned out. See “Replacing light bulbs” on page 377 in Section 7–3.

## Emergency flashers

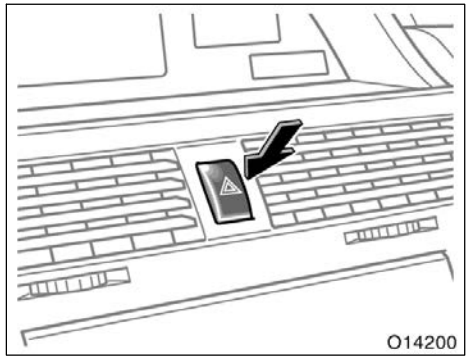


**To turn on the emergency flashers, push the switch.**

All the turn signal lights will flash. To turn them off, push the switch once again.

Turn on the emergency flashers to warn other drivers if your vehicle must be stopped where it might be a traffic hazard.

Always pull as far off the road as possible.

The turn signal light switch will not work when the emergency flashers are operating.

**NOTICE**

***To prevent the battery from being discharged, do not leave the switch on longer than necessary when the engine is not running.***

## Instrument panel light control

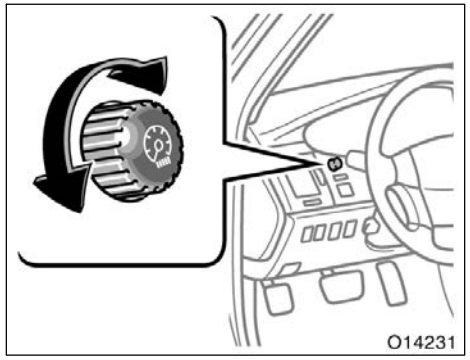


**To adjust the brightness of the instrument panel lights, turn the knob.**

With the knob turned fully clockwise, the intensity of the instrument panel lights will not be reduced even when the tail lights/headlights are turned on.

## Front fog lights

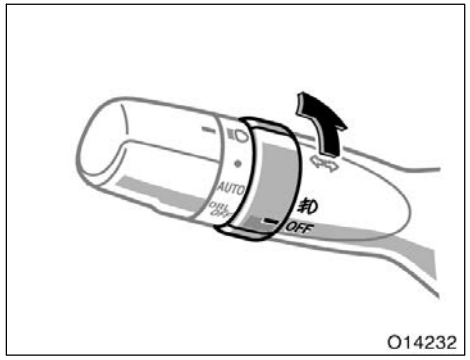


**To turn on the front fog lights, twist the band of the headlight switch lever to the fog light mark. They will come on only when the headlights are on low beam.**

## Interior light

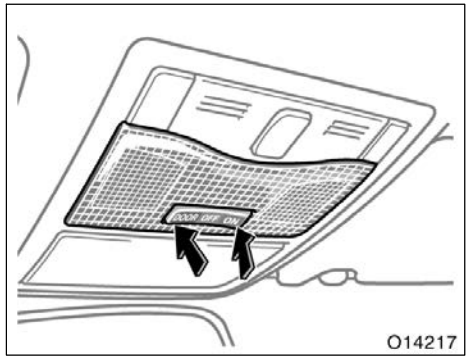


**To turn on the interior light, push the switch.**

The interior light switch has the following positions:

“ON”—Keeps the light on all the time.

“OFF”—Turns the light off.

“DOOR”—Turns the light on when any door is opened. The light goes off when all the doors are closed. For details, see “Illuminated entry system” on page 135 in this Section.

**Interior light and rear personal lights—**The rear personal lights can be turned on or off by the interior light switch.

## Front personal lights

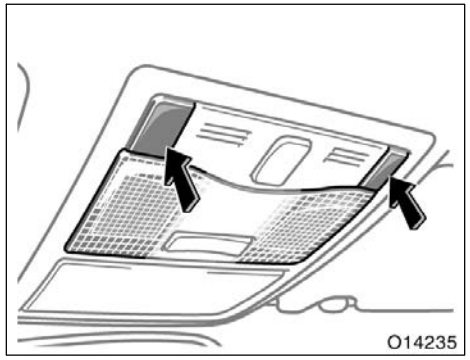


**To turn on the front personal light, push the switch. To turn the light off, push the switch once again.**

## Rear personal lights

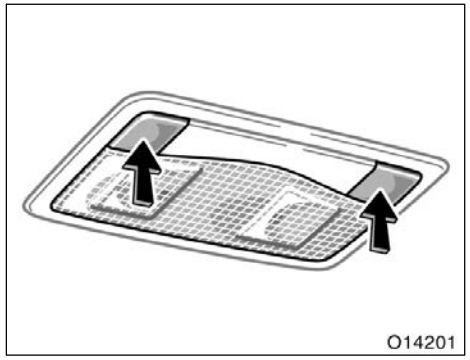


**Personal light switch**

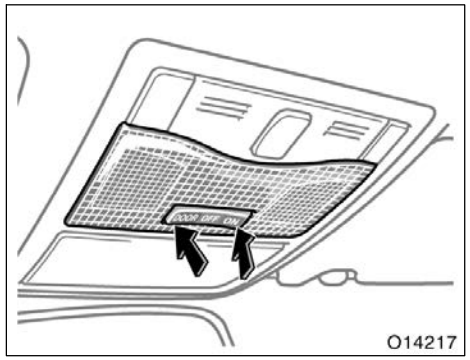


**Interior light switch**

**To turn on the rear personal lights, operate the interior light switch. The lights can be turned on or off by pushing on each button when the interior light switch is in the "OFF" or "DOOR" position.**

The interior light switch has the following positions:

"ON"—Keeps the light on all the time.

"OFF"—Turn the lights on only when pushing on each button.

"DOOR"—Turns the light on when any door is opened or unlock a door with all the doors are locked. For details, see "Illuminated entry system" on page 135 in this Section.

## Illuminated entry system

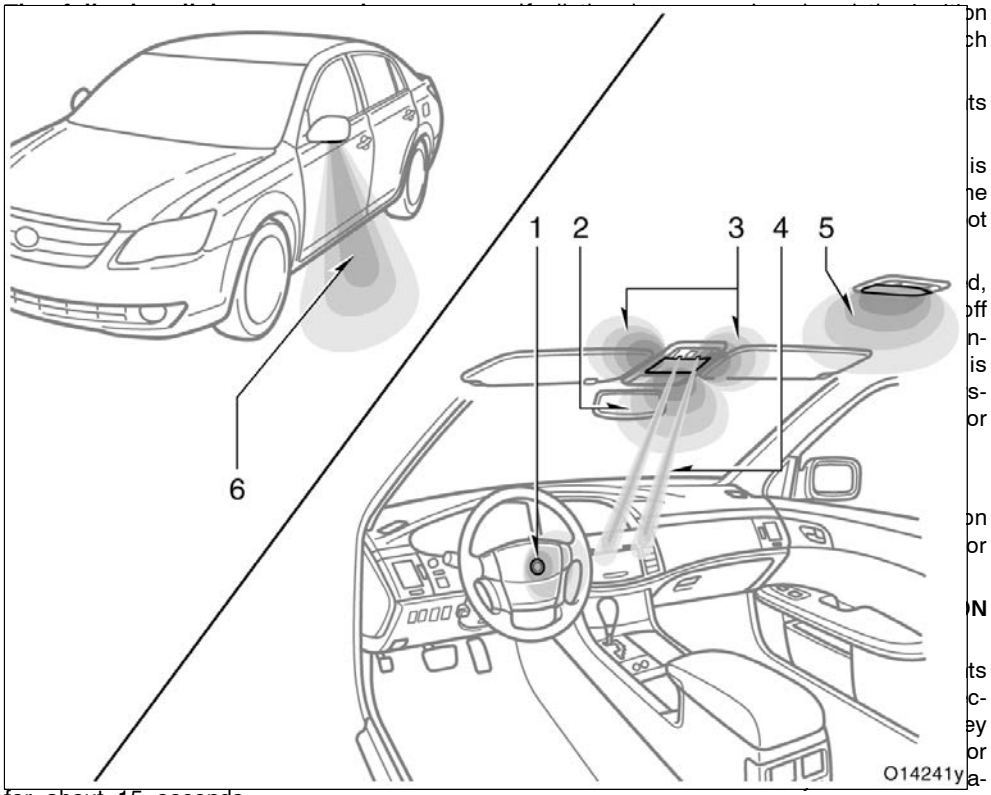


for about 15 seconds.

tion area, see “Smart key system” on page 27 in Section 1–2.

## Windshield wipers and washer (intermittent operation type)

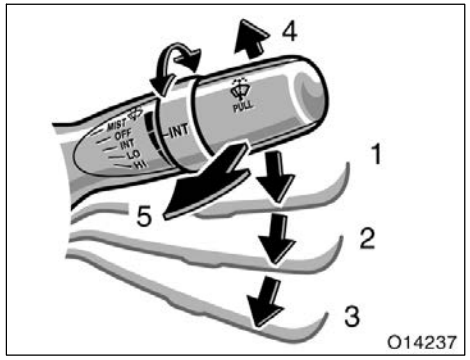


**To turn on the windshield wipers, move the lever to the desired setting.**

The ignition switch must be set at ON.

| Lever position | Operation |
|---|---|
| Position 1 | Intermittent operation |
| Position 2 | Low speed operation |
| Position 3 | High speed operation |
| Position 4 | Single sweep operation |
| Position 5 | Washer on |

Rotating the band on the lever lets you adjust the wiper time interval when the wiper lever is in the intermittent position (position 1). Twist the band upward to increase the time between sweeps, and downward to decrease it.

When the lever is set to the intermittent position (position 1), the wipers move according to the vehicle speed. The higher the vehicle speed is, the shorter the intermittent time becomes.

When the lever is in the position 2, the wipers operate at low speed while the vehicle is moving and, when it stops, they switch to intermittent operation. If the lever is shifted “LO” position while the vehicle is stopped, the wiper will begin to work in intermittent operation after a couple of wipes at low speed.

This feature can be deactivated. For details, ask your Toyota dealer.

As soon as the vehicle starts to move, the wiper will operate once to clear the driver’s front view if it is set to “INT”.

**To squirt washer fluid, pull the lever toward you (position 5).**

After the washer operates, the wipers operate three times in low operation, pause for several seconds, and then operate once more. This occurs only if the wiper switch is in the “OFF” or “INT” position.

The interval between the 3 wipes and the final wipe depends on the vehicle speed. The final sweep does not occur if the vehicle speed exceeds 170 km/h (106 mph).

The final wipe (after a pause of several seconds) prevents the washer fluid from dripping. The final wipe can be set to occur after a three second pause, or can be deactivated. For details, ask your Toyota dealer.

For instructions on adding washer fluid, see “Adding washer fluid” on page 375 in Section 7–3.

In freezing weather, warm the windshield with the defroster before using the washer. This will help prevent the washer fluid from freezing on your windshield, which can block your vision.

**NOTICE**

***Do not operate the wipers if the windshield is dry. It may scratch the glass or may damage wiper blades.***

When waxing your vehicle, make sure that the washer nozzles do not become blocked. If a nozzle becomes blocked, contact your Toyota dealer to have the vehicle serviced.

**NOTICE**

***If a nozzle becomes blocked, do not try to clear it with a pin or other object. The nozzle will be damaged.***

## Windshield wipers and washer

## (raindrop detection type)

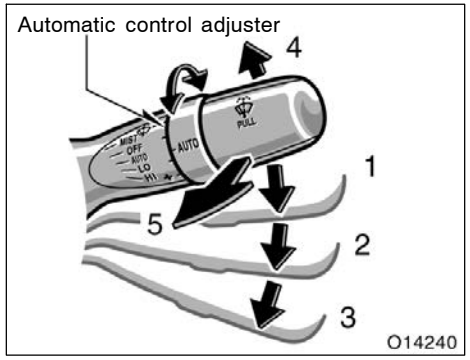


**To turn on the windshield wipers, move the lever to the desired setting.**

The ignition switch must be set at ON.

| Lever position | Operation |
|---|---|
| Position 1 | Automatic operation |
| Position 2 | Low speed operation |
| Position 3 | High speed operation |
| Position 4 | Single sweep operation |
| Position 5 | Washer on |

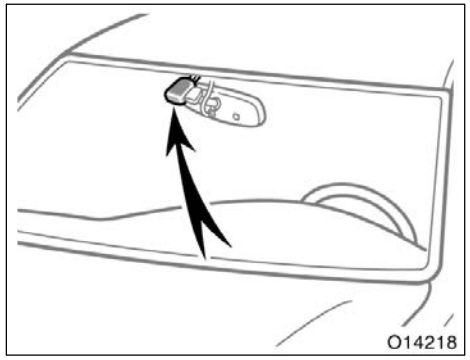


**Automatic operation (position 1)**

The wiper speed is determined by the amount of raindrops and sunlight detected by the automatic wiper control sensor.

The automatic wiper control sensor is on the inside of the windshield as shown above.

If you feel that the operation of the automatic wiper control is too fast or too slow, twist the automatic control adjuster in the "–" direction to lower sensitivity, and "+" direction to boost the sensitivity.

Even if the wiper lever is in the position 1, the system will switch to intermittent operations in the following conditions:

- When the windshield gets extremely cold (at less than –10°C [14°F])
- When the system malfunctions

However, when the windshield gets extremely hot (at more than 90°C [194°F]), the wipers do not operate even if the wiper lever is in the position 1.

As soon as the vehicle starts to move, the wiper will operate once to clear the driver's front view if it is set to "AUTO".

**⚠ CAUTION**

**Be careful not to get your fingers caught between the wipers and windshield.**

**When the wiper lever is in the position 1 with the ignition switch on, the wipers could operate automatically in the following cases:**

- **If you touch the upper center of the windshield adjacent to the sensor.**
- **If you wipe the upper center of the windshield (adjacent to which the sensor is located) with a towel or other object.**
- **If the windshield vibrates.**
- **If you touch the sensor.**

***NOTICE***

***Do not apply detergent to or wet the automatic wiper control sensor when cleaning the inside of the windshield.***

**To squirt washer fluid, pull the lever toward you (position 5).**

After the washer operates, the wipers operate three times in low operation, pause for several seconds, and then operate once more. This occurs only if the wiper switch is in the “OFF” or “AUTO” position.

The interval between the 3 wipes and the final wipe depends on the vehicle speed. The final sweep does not occur if the vehicle speed exceeds 170 km/h (106 mph).

The final wipe (after a pause of several seconds) prevents the washer fluid from dripping. The final wipe can be set to occur after a three second pause, or can be deactivated. For details, ask your Toyota dealer.

For instructions on adding washer fluid, see “Adding washer fluid” on page 375 in Section 7–3.

In freezing weather, warm the windshield with the defroster before using the washer. This will help prevent the washer fluid from freezing on your windshield, which can block your vision.

***NOTICE***

***Do not operate the wipers if the windshield is dry. It may scratch the glass or may damage wiper blades.***

When waxing your vehicle, make sure that the washer nozzles do not become blocked. If a nozzle becomes blocked, contact your Toyota dealer to have the vehicle serviced.

***NOTICE***

***If a nozzle becomes blocked, do not try to clear it with a pin or other object. The nozzle will be damaged.***

## Rear window and outside rear view mirror defoggers

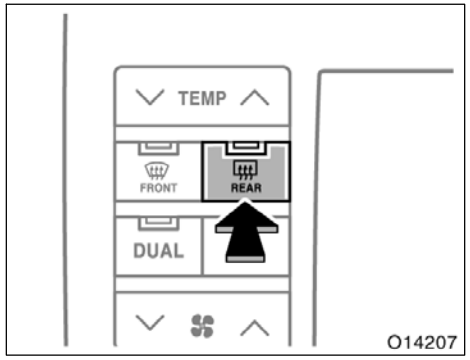


Type A

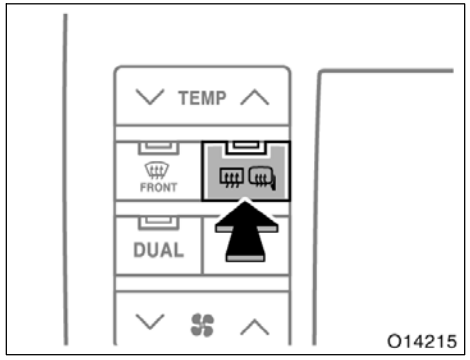


Type B

**To defog or defrost the rear window, push the switch.**

The ignition switch must be set at ON.

The thin heater wires on the inside of the rear window will quickly clear the surface. An indicator light will illuminate to indicate the defogger is operating.

Type B only—The heater panels in the outside rear view mirrors will also quickly clear the surfaces. Keep your hands off the mirror faces when the switch is on.

Push the switch once again to turn the defoggers off.

The system will automatically shut off after the defogger has operated about 15 minutes.

**⚠ CAUTION**

**Type B only—Since the mirror surfaces can get hot, do not touch them when the defogger switch is on.**

Make sure you turn the defoggers off when the surfaces are clear. Leaving the defoggers on for a long time could cause the battery to discharge, especially during stop–and–go driving. The defoggers are not designed for drying rain water or for melting snow.

Type B only—If the outside rear view mirrors are heavily coated with ice, use a spray de–icer before operating the switch.

***NOTICE***

***When cleaning the inside of the rear window, be careful not to scratch or damage the heater wires or connectors.***

# SECTION 1 – 6

## OPERATION OF INSTRUMENTS AND CONTROLS

### Gauges, Meters and Service reminder indicators


Fuel gauge . . . . . 142
Engine coolant temperature gauge . . . . . 142
Tachometer . . . . . 143
Odometer and two trip meters . . . . . 143
Service reminder indicators and warning buzzers . . . . . 145

## Fuel gauge

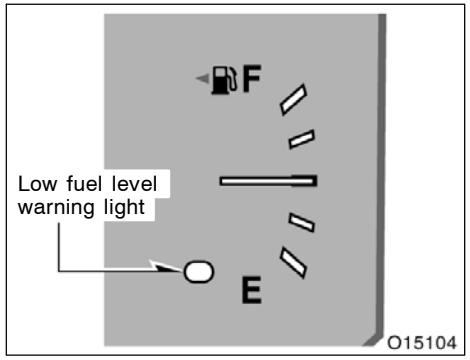


**The gauge indicates the approximate quantity of fuel remaining in the tank when the ignition switch is set at ON.**

Nearly full—Needle at “F”
Nearly empty—Needle at “E”

It is a good idea to keep the tank over 1/4 full.

If the fuel level approaches “E” or the low fuel level warning light comes on, fill the fuel tank as soon as possible.

On inclines or curves, due to the movement of fuel in the tank, the fuel gauge needle may fluctuate or the low fuel level warning light may come on earlier than usual.

If the fuel tank is completely empty, the malfunction indicator lamp comes on. Fill the fuel tank immediately.

The indicator lamp goes off after driving several times. If the indicator lamp does not go off, contact your Toyota dealer as soon as possible.

## Engine coolant temperature gauge

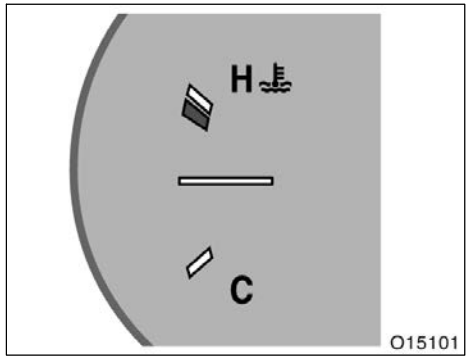


**The gauge indicates the engine coolant temperature when the ignition switch is on. The engine operating temperature will vary with changes in weather and engine load.**

If the needle moves into the red zone, your engine is too hot. If your vehicle overheats, stop your vehicle and allow the engine to cool.

Your vehicle may overheat during severe operating conditions, such as:

- Driving up a long hill on a hot day.
- Reducing speed or stopping after high speed driving.
- Idling for a long period with the air conditioning on in stop–and–go traffic.
- Towing a trailer.

**NOTICE**

- ***Do not remove the thermostat in the engine cooling system as this may cause the engine to overheat. The thermostat is designed to control the flow of coolant to keep the temperature of the engine within the specified operating range.***
- ***Do not continue driving with an overheated engine. See "If your vehicle overheats" on page 319 in Section 4.***

## Tachometer

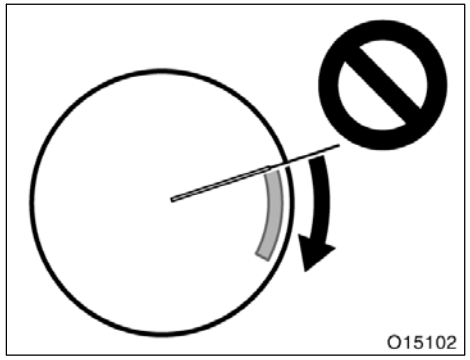


**The tachometer indicates engine speed in thousands of rpm (revolutions per minute). Use it while driving to select correct shift points and to prevent engine lugging and over–revving.**

Driving with the engine running too fast causes excessive engine wear and poor fuel economy. Remember, in most cases the slower the engine speed, the greater the fuel economy.

**NOTICE**

***Do not let the indicator needle get into the red zone. This may cause severe engine damage.***

## Odometer and two trip meters

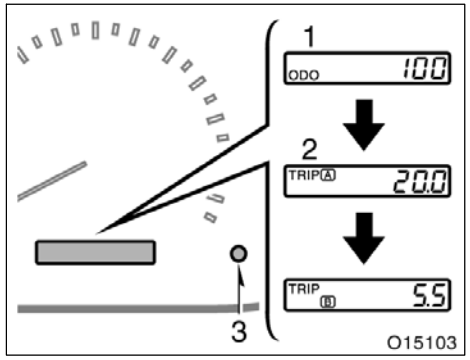


**This meter displays the odometer and two trip meters when the ignition switch is set at ON.**

1. Odometer—Shows the total distance the vehicle has been driven.
2. Two trip meters—Show two different distances independently driven since the last time each trip meter was set to zero.

   You can use one trip meter to calculate the fuel economy and the other to measure the distance on each trip. All trip meter data is cancelled if the electrical power source is disconnected.

3. Trip meter reset knob—Resets the two trip meters to zero, and also change the meter display.

   To change the meter display, quickly push and release the button. The meter display changes in the order from the odometer to trip meter A to trip meter B, then back to the odometer each time you push.

   To reset the trip meter A to zero, display the meter A reading, then push and hold the button until the meter is set to zero. The same process can be applied for resetting the trip meter B.

## Service reminder indicators and warning buzzers

| If the indicator or buzzer comes on... | | Do this. |
|---|---|---|
| (a) | BRAKE or (indicator and buzzer) | If parking brake is off, stop immediately and contact Toyota dealer. |
| (b) | (indicator and buzzer) | Fasten driver's seat belt. |
| (c) | PASSENGER (indicator and buzzer) | Fasten front passenger's seat belt. |
| (d) | | Stop immediately and contact Toyota dealer. |
| (e) | | Stop and check. |
| (f) | CHECK or | Take vehicle to Toyota dealer. |
| (g) | Low fuel level warning light | Fill up tank. |

| If the indicator or buzzer comes on... | | Do this. |
|---|---|---|
| (h) | **ABS** or | Take vehicle to Toyota dealer.<br>If brake system warning light is also on, stop immediately and contact Toyota dealer. |
| (i) | (indicator and buzzer) | Close all doors. |
| (j) | | Take vehicle to Toyota dealer immediately. |
| (k) | **VSC** | Take vehicle to Toyota dealer. |
| (l) | | Adjust tire inflation pressure (including spare tire). If the light blinks, contact Toyota dealer. |
| (m) | | Add washer fluid. |
| (n) | | Take vehicle to Toyota dealer. |

| If the indicator or buzzer comes on... | | Do this. |
|---|---|---|
| (o) | MAINT REQD | Replace engine oil. |
| (p) | (indicator and buzzer) | Shift selector lever to “P” and turn off engine. Check key. |
| (q) | Dynamic laser cruise control master warning light | Check condition according to warning code. If system malfunctions, contact Toyota dealer. |
| (r) | Key reminder buzzer | Remove key. |

**(a) Brake System Warning Light and Buzzer**

This light comes on in the following cases when the ignition switch is set at ON.

- **When the parking brake is applied...**

This light comes on for a few seconds when the ignition switch is set at ON even after the parking brake is released.

If the vehicle speed rises above 5 km/h (3 mph) with the parking brake applied for 1 seconds or more, a buzzer sounds.

- **When the brake fluid level is low...**

**⚠ CAUTION**

**It is dangerous to continue driving normally when the brake fluid level is low.**

**Have your vehicle checked at your Toyota dealer in the following cases:**

- The light does not come on even if the parking brake is applied when the ignition switch is set at ON.
- The light does not come on even if the ignition switch is set at ON with the parking brake released.

A warning light turning on briefly during operation does not indicate a problem.

**⚠ CAUTION**

**If either of the following conditions occurs, immediately stop your vehicle at a safe place and contact your Toyota dealer.**

- **The light does not turn off even after the parking brake is released while the engine is running.**

  **In this case, the brakes may not work properly and your stopping distance will become longer. Depress the brake pedal firmly and bring the vehicle to an immediate stop.**

- **The brake system warning light remains on together with the "ABS" warning light.**

  **In this case, not only the anti−lock brake system will fail but also the vehicle will become extremely unstable during braking.**

**(b) Driver's Seat Belt Reminder Light and Buzzer**

The light and buzzer act as a reminder to buckle up the driver's seat belt.

Once the ignition switch is set at ON or engine start, the reminder light flashes and buzzer sounds if the driver's seat belt is not fastened. Unless the driver fastens the belt, the light continues flashing and the buzzer sounds for about 6 seconds.

If the vehicle speed rises above 15 km/h (9 mph) with the seat belt unfastened, the buzzer will sound for about 10 seconds. Then, if the seat belt is still unfastened, the buzzer will sound in a different tone for 20 seconds. Even if the vehicle speed drops below 15 km/h (9 mph), the buzzer will continue to sound. To stop the buzzer, fasten the seat belt. If the buzzer still sounds, make sure the front passenger's seat belt is fastened.

**(c) Front Passenger's Seat Belt Reminder Light and Buzzer**

The light and buzzer act as a reminder to have the front passenger buckle up the seat belt.

Once the ignition switch is set at ON or engine start, the reminder light flashes if a passenger sits in the front passenger seat and does not fasten the seat belt. Unless the front passenger fastens the belt, the light continue flashing.

If the vehicle speed rises above 15 km/h (9 mph) with the seat belt unfastened, the buzzer will sound for about 10 seconds. Then, if the seat belt is still unfastened, the buzzer will sound in a different tone for 20 seconds. Even if the vehicle speed drops below 15 km/h (9 mph), the buzzer will continue to sound. To stop the buzzer, fasten the seat belt. If the buzzer still sounds, make sure the driver's seat belt is fastened.

If luggage or other load is placed on the front passenger seat, depending on its weight, the reminder light to flash and buzzer to sound.

**(d) Charging System Warning Light**

This warning light comes on when the ignition switch is set at ON, and goes off when the engine is started.

When there are problems in the charging system while the engine is running, the warning light comes on.

**NOTICE**

***When the charging system warning light comes on while the engine is running, malfunctions such as the engine drive belt being broken may have occurred. If the warning light comes on, immediately stop the vehicle in a safe place and contact your Toyota dealer.***

**(e) Low Engine Oil Pressure Warning Light**

This light warns that the engine oil pressure is too low.

If it flickers or stays on while you are driving, pull off the road to a safe place and stop the engine immediately. Call a Toyota dealer or qualified repair shop for assistance.

The light may occasionally flicker when the engine is idling or it may come on briefly after a hard stop. There is no cause for concern if it then goes out when the engine is accelerated slightly.

The light may come on when the oil level is extremely low. It is not designed to indicate low oil level, and the oil level must be checked using the level dipstick.

**NOTICE**

***Do not drive the vehicle with the warning light on—even for one block. It may ruin the engine.***

**(f) Malfunction Indicator Lamp**

**This lamp comes on when the ignition switch is set at ON and goes off after the engine starts. This means that the warning light system is operating properly.**

**If the lamp remains on, or the lamp comes on while driving, first check the followings.**

- Empty fuel tank

  If the fuel tank is empty, refuel immediately.

- Loose fuel tank cap

  If the fuel tank cap is loose, securely tighten it.

These cases are temporary malfunctions. The malfunction indicator lamp will go off after taking several driving trips.

If the lamp does not go off even after several trips, contact your Toyota dealer as soon as possible.

**If the fuel tank is not empty or the fuel tank cap is not loose...**

- There is a problem somewhere in the engine, emission control system, electronic throttle control system, automatic transmission electrical system or warning light system itself.

Contact your Toyota dealer as soon as possible to service the vehicle.

If engine speed does not increase when the accelerator pedal is depressed, there may be a problem somewhere in the electronic throttle control system.

At this time, vibration may occur. However, if you depress the accelerator pedal more firmly and slowly, you can drive your vehicle at low speeds. Have your vehicle checked by your Toyota dealer as soon as possible.

Even if the abnormality of the electronic throttle control system is corrected during low speed driving, the system may not be recovered until the engine is stopped and the engine off.

**⚠ CAUTION**

**Be especially careful to prevent erroneous pedal operation.**

**Emissions Inspection and Maintenance (I/M) programs**

Your vehicle may not pass a state emission inspection if the malfunction indicator lamp remains on. Contact your Toyota dealer to check your vehicle's emission control system and OBD (On–Board Diagnostics) system before taking your vehicle for the inspection.

For details, see "Emissions Inspection and Maintenance (I/M) programs" on page 346 in Section 6.

**(g) Low Fuel Level Warning Light**

This light comes on when the fuel level in the tank becomes nearly empty. Fill up the tank as soon as possible.

On inclines or curves, due to the movement of fuel in the tank, the low fuel level warning light may come on earlier than usual.

**(h) “ABS” Warning Light**

**Vehicles without vehicle stability control system—**

The light comes on with the ignition switch is set at ON. If the anti–lock brake system works properly, the light turns off after a few seconds. Thereafter, if the system malfunctions, the light comes on again.

When the “ABS” warning light is on (and the brake system warning light is off), the anti–lock brake system does not operate, but the brake system still operates conventionally.

When the “ABS” warning light is on (and the brake system warning light is off), the anti–lock brake system does not operate so that the wheels could lock up during a sudden braking or braking on slippery road surfaces.

**If either of the following conditions occurs, this indicates a malfunction somewhere in the components monitored by the warning light system. Contact your Toyota dealer as soon as possible to service the vehicle.**

- The light does not come on when the ignition switch is set at ON or remains on.
- The light comes on while you are driving.

A warning light turning on briefly during operation does not indicate a problem.

**⚠ CAUTION**

**If the “ABS” warning light remains on together with the brake system warning light, immediately stop your vehicle at a safe place and contact your Toyota dealer.**

**In this case, not only the anti–lock brake system will fail but also the vehicle will become extremely unstable during braking.**

**Vehicles with vehicle stability control system—**

The light comes on when the ignition switch is set at ON. If the anti–lock brake system and the brake assist system work properly, the light turns off after a few seconds. Thereafter, if the system malfunctions, the light comes on again.

When the “ABS” warning light is on (and the brake system warning light is off), the anti–lock brake system and the brake assist system do not operate, but the brake system still operates conventionally.

When the “ABS” warning light is on (and the brake system warning light is off), the anti–lock brake system does not operate so that the wheels could lock up during a sudden braking or braking on slippery road surfaces.

**If either of the following conditions occurs, this indicates a malfunction somewhere in the components monitored by the warning light system. Contact your Toyota dealer as soon as possible to service the vehicle.**

- The light does not come on when the ignition switch is set at ON or remains on.
- The light comes on while you are driving.

A warning light turning on briefly during operation does not indicate a problem.

**⚠ CAUTION**

**If the "ABS" warning light remains on together with the brake system warning light, immediately stop your vehicle at a safe place and contact your Toyota dealer.**

**In this case, not only the anti–lock brake system will fail but also the vehicle will become extremely unstable during braking.**

**(i) Open Door Warning Light and Buzzer**

This light remains on until all the doors are completely closed.

The buzzer also sounds once when any of the doors is not completely closed at the vehicle speed 5 km/h (3 mph) or more. Stop the vehicle and close the door completely.

**(j) SRS Warning Light**

**This indicator comes on when the ignition switch is set at ON. It goes off after about 6 seconds. This means the SRS airbags and seat belt pretensioners are operating properly.**

This warning light system monitors the airbag sensor assembly, front airbag sensors, side and curtain shield airbag sensors, curtain shield airbag sensors, driver's seat position sensor, driver's seat belt buckle switch, front passenger occupant classification system, "AIRBAG ON" indicator light, "AIRBAG OFF" indicator light, front passenger's seat belt buckle switch, seat belt pretensioner assemblies, inflators, interconnecting wiring and power sources.

If any of the following conditions occurs, this indicates a malfunction of the airbags or seat belt pretensioners. Contact your Toyota dealer as soon as possible.

- The light does not come on when the ignition switch is set at ON or remains on for more than 6 seconds.
- The light comes on while driving.

The SRS warning light and "AIRBAG OFF" indicator light will come on if there is a malfunction in the front passenger occupant classification system.

**(k) "VSC" Warning Light**

The light warns that there is a problem somewhere in the vehicle stability control system or traction control system.

The light will come on when the ignition switch is set at ON and will go off after about a few seconds.

If the light comes on while driving, the vehicle stability control system and traction control system do not work. However, as conventional braking operates when applied, there is no problem to continue your driving.

In the following cases, contact your Toyota dealer:

- The light does not come on after the ignition is turned to on.
- The light is left on after the ignition is turned to on.
- The light comes on while driving.

**(l) Tire Pressure Warning Light**

This light warns that the tire inflation pressure of one or more of your tires is low. The light comes on when the ignition switch is set at ON. It goes off after a few seconds. This indicates that the tire pressure warning system is functioning properly.

If the warning light comes on, stop your vehicle in a safe place as soon as possible and check that the inflation pressure of all tires is as specified on the tire and loading information label. (See "Checking tire inflation pressure" on page 361 in Section 7–2.) The light should go off a few minutes after the tire pressure is adjusted.

If the warning light comes on after blinking for 1 minute, the tire pressure warning system may be malfunctioning. Contact your Toyota dealer.

For details, see "Tire pressure warning system" on page 169 in Section 1–7.

**(m) Low Windshield Washer Fluid Level Warning Light**

The light warns that the windshield washer fluid level is too low. Add washer fluid at your earliest opportunity. (For instructions, see "Adding washer fluid" on page 375 in Section 7–3.)

The light will come on when the ignition switch is set at ON and will go off after about a few seconds.

**(n) Automatic Headlight Leveling System Warning Light**

This light warns that when there is a problem somewhere in the automatic headlight leveling system.

The light will come on when the ignition switch is set at ON and will go off after a few seconds.

If it comes on, have your vehicle checked by your Toyota dealer.

**(o) Engine Oil Replacement Reminder Light (for vehicles sold in U.S.A.)**

This light acts as a reminder to replace the engine oil.

This light will come on when the ignition switch is set at ON and will go off after about a few seconds.

When you drive for about 7200 km (4500 miles) after the engine oil replacement, this light illuminates for about 3 seconds and then flashes for about 15 seconds with the ignition switch is set at ON. If you continue driving without replacing the engine oil, and if the distance driven exceeds 8000 km (5000 miles), the light will come on after the ignition switch is set at ON. The light will remain on thereafter.

If the light is flashing, we recommend that you replace the engine oil at an early opportunity depending on the driving and road conditions. If the light comes on, replace it as soon as possible.

The system must be reset after the engine oil replacement. Reset the system by the following procedure:

1. Turn the engine off with the odometer reading shown. (For details, see “Odometer and two trip meters” on page 143 in this Section.)
2. Turn the ignition switch is set at ON while holding down the trip meter reset knob.

Hold down the knob for at least 5 seconds. The odometer indicates “000000” and the light goes off.

If the system fails to reset, the light will continue flashing.

**(p) Smart Key System Warning Light and Buzzer**

The light and buzzer warn that there is a problem somewhere in the operation of the smart key system. See “Driving and parking using smart key system” on page 300 in Section 3.

**(q) Dynamic Laser Cruise Control Master Warning Light**

This light warns that there is a problem somewhere in the dynamic laser cruise control system.

The light will come on when the ignition switch is set at ON and go off after a few seconds.

When the light comes on, the alarm sounds and the warning code will appear on the display. At this time, dynamic laser cruise control is cancelled. For details, see “Dynamic laser cruise control” on page 179 in Section 1–7.

**(r) Key Reminder Buzzer (vehicles with key cylinder–type ignition switch)**

This buzzer act as a reminder to remove the key when you open the driver’s door with the engine off.

**CHECKING SERVICE REMINDER INDICATORS (except the low fuel level warning light)**

1. Apply the parking brake.
2. Open one of the doors.
   The open door warning light should come on.
3. Close the door.
   The open door warning light should go off.
4. Set the ignition switch at ON, but do not start the engine.
   All the service reminder indicators except the open door warning light should come on. The “ABS” and “VSC” warning lights, tire pressure warning light, low windshield washer fluid level warning light, automatic headlight leveling system warning light, engine oil replacement reminder light and dynamic laser cruise master warning light go off after a few seconds. The SRS warning light goes off after about 6 seconds. (slip indicator light and “READY” [dynamic laser cruise ready mode] indicator light also come on and go off after a few seconds. Front passenger occupant classification indicator lights also come on and go off after about 4 seconds.)

If any service reminder indicator or warning buzzer does not function as described above, have it checked by your Toyota dealer as soon as possible.

# SECTION 1–7

## OPERATION OF INSTRUMENTS AND CONTROLS

### Ignition switch, Transmission and Parking brake


Ignition switch . . . . . 158
Automatic transmission . . . . . 161
Traction control system . . . . . 165
Vehicle stability control system . . . . . 167
Tire pressure warning system . . . . . 169
Parking brake . . . . . 175
Cruise control . . . . . 176
Dynamic laser cruise control . . . . . 179

## Ignition switch (with key cylinder−type ignition switch)

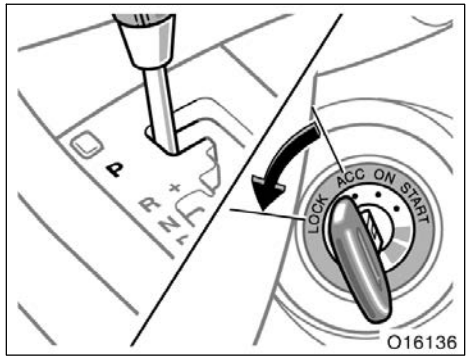


**“START”—Starter motor on. The key will return to the “ON” position when released.**

For starting tips, see page 295 in Section 3.

**“ON”—Engine on and all accessories on.**

This is the normal driving position.

**“ACC”—Accessories such as the radio operate, but the engine is off.**

If you leave the key at the “ACC” or “LOCK” position and open the driver’s door, a buzzer will remind you to remove the key.

**“LOCK”—Engine is off and the steering wheel is locked. The key can be removed only at this position.**

The selector lever must be put in the “P” position before turning the key from “ACC” to the “LOCK” position.

Once you remove the key, the engine immobilizer system is automatically set. (See “Engine immobilizer system” on page 16 in Section 1−2.)

When starting the engine, the key may seem stuck at the “LOCK” position. To free it, first be sure the key is pushed all the way in, and then rock the steering wheel slightly while turning the key gently.

Approximately five hours after the engine is turned off, you may hear sound coming from underneath the luggage compartment for several minutes. This is normal operation and does not indicate a malfunction. (See “Leak detection pump” on page viii.)

It is not a malfunction if the needle on all meters and gauges move slightly when the key is turned to the “ACC”, “ON” or “START” position.

**NOTICE**

***Do not leave the key at the “ON” if the engine is not running. The battery will discharge and the ignition could be damaged.***

## Ignition switch (with smart key system)

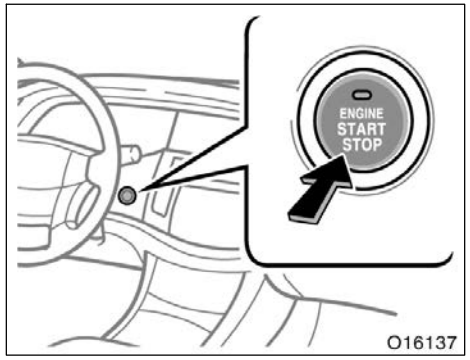


**When the key is in the vehicle, pressing the "ENGINE START STOP" switch (engine switch) allows you to start and stop the engine or choose at the ACC, ON, or ignition switch off.**

When the brake pedal is not depressed, pressing the "ENGINE START STOP" switch changes the ignition switch mode as follows. Press the "ENGINE START STOP" switch slowly and firmly.

**First time—ACC (accessory) mode (illuminate amber)**
Accessories such as the radio operate.

**Second time—ON mode (illuminate amber)**
Power on and all accessories on.

**Third time—Power off (indicator light off)**

Pressing the "ENGINE START STOP" switch again returns the ignition switch to the ACC.

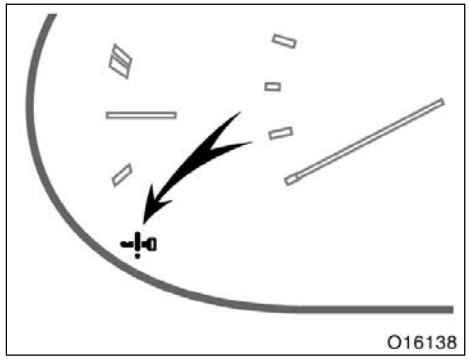


If a buzzer sounds and the smart key system warning light comes on for 5 seconds when pressing the "ENGINE START STOP" switch, this indicates that the key is not in the vehicle.

**If the brake pedal is depressed, the indicator light will turn green, regardless of which mode is selected. When the indicator light is green, pressing the "ENGINE START STOP" switch once starts the engine. (For starting tips, see "How to start the engine" on page 296 in Section 3.)**

If the amber indicator light on the "ENGINE START STOP" switch blinks, this indicates a malfunction of the push start system. Turn off the engine immediately and contact your Toyota dealer.

Approximately five hours after the engine is turned off, you may hear sound coming from underneath the luggage compartment for several minutes. This is normal operation and does not indicate a malfunction. (See "Leak detection pump" on page viii.)

It is not a malfunction if the needle on all meters and gauges move slightly when the ignition switch is set at ACC, ON or when the engine starts.

| ***NOTICE*** |
| --- |
| ***Do not leave the ignition switch at ON if the engine is not running. The battery will discharge and the ignition could be damaged.*** |

**When the battery is disconnected or run down,** the push button start function memorizes the current mode. After you reconnect, replace, or recharge the battery, the memorized mode is selected automatically. In any of these cases, turn off the engine if the engine comes on.

## Automatic transmission

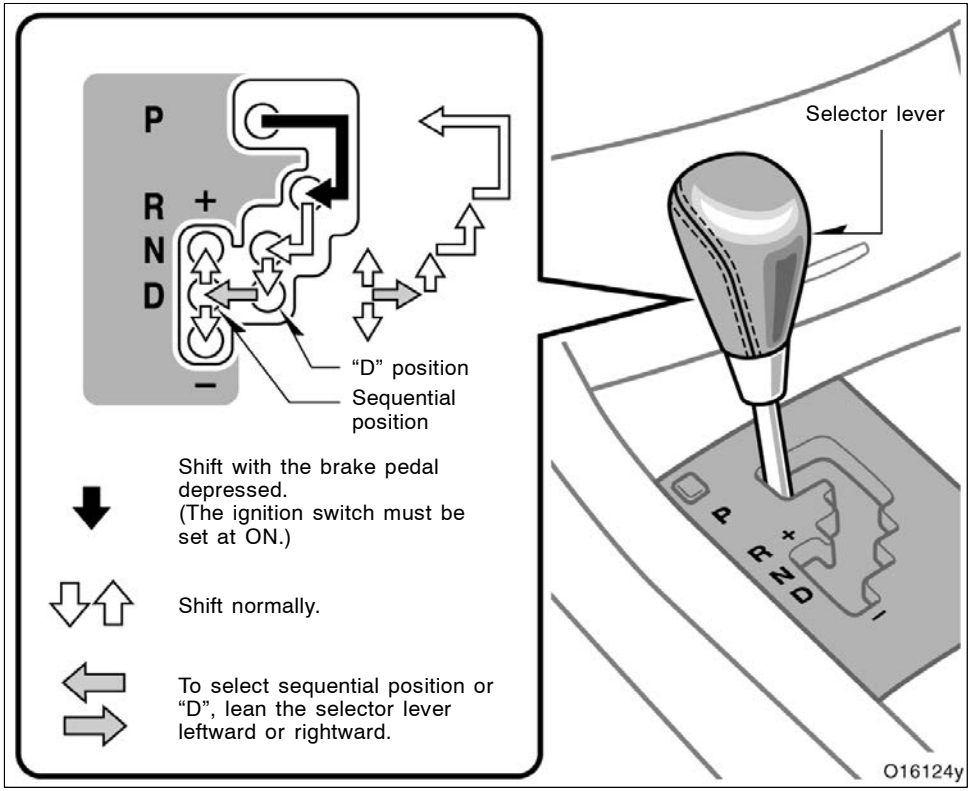


Your automatic transmission has a shift lock system to minimize the possibility of incorrect operation. This means you can only shift out of "P" position when the brake pedal is depressed (with the ignition switch is set at ON).

**(a) Selector lever**

The shift position is also displayed on the instrument cluster.

**P:** Parking, engine starting and key removal

**R:** Reverse

**N:** Neutral

**D:** Normal driving (shifting into overdrive)

**Sequential position:** "S" mode driving

**+:** Upshift range

**–:** Downshift range

**(b) Normal driving**

1. Start the engine as instructed in “How to start the engine” on page 296 in Section 3. The transmission must be in “P” or “N”.
2. With your foot holding down the brake pedal, shift the selector lever to “D”.

When the lever is in the “D” position, the automatic transmission system will select the most suitable gear for running conditions such as normal cruising, hill climbing, hard towing, etc.

Always use the “D” position for better fuel economy and quieter driving. In this position, shifting into the overdrive gear is possible. If the engine coolant temperature is low, the transmission will not shift into the overdrive gear even in the “D” position.

**⚠ CAUTION**

**Never put your foot on the accelerator pedal while shifting.**

3. Release the parking brake and brake pedal. Depress the accelerator pedal slowly for smooth starting.

**(c) Driving in “S” mode**

**To select the “S” mode, put the selector lever in the sequential position.**

**In the “S” mode, you can change the shift range position. The shift range position can be switched between 5 (fifth range) and 1 (first range) by pushing the selector lever forward towards “+” or pulling back towards “–”. When the selector lever is moved into the “S” mode, the initial shift range position is 4 (fourth range).**

The “S” mode indicator light and the current shift range position are shown on the instrument cluster.

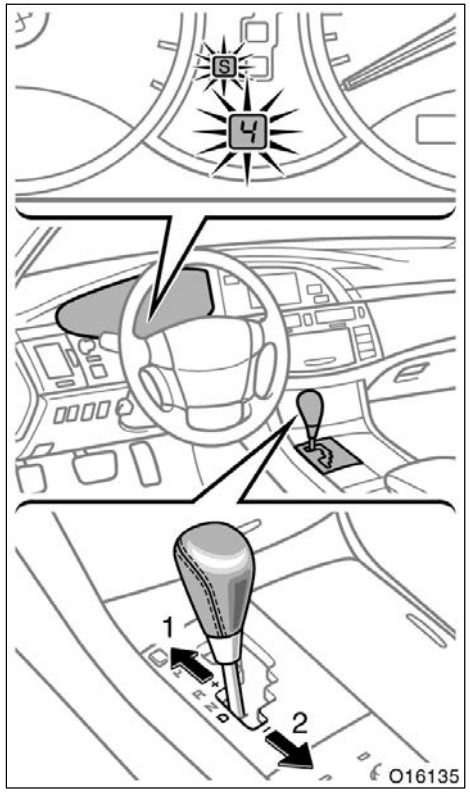


**1: Upshift range**
**2: Downshift range**

**Shift range positions**

- **“5” (Fifth range):**
  The most suitable gear is selected automatically between first and overdrive (fifth) gears according to the vehicle speed or driving conditions.
- **“4” (Fourth range):**
  The most suitable gear is selected automatically between first and fourth gears according to the vehicle speed or driving conditions. Slight engine braking will be obtained on a downhill road. Smooth running with less shifting will be obtained on an uphill road.
- **“3” (Third range):**
  The most suitable gear is selected automatically between first and third gears according to the vehicle speed or driving conditions. This range is to be used when stronger engine braking is necessary.
- **“2” (Second range):**
  First or second gear will be selected automatically according to the vehicle speed or driving conditions. This range is to be used when engine braking stronger than that of the “3” range position is necessary.
- **“1” (First range):**
  The gear is fixed in first regardless of vehicle speed or driving conditions. This range is to be used when maximum engine braking is necessary.

If you attempt to downshift the transmission when it is not possible to downshift due to high vehicle speed, a warning tone sounds twice.

**Maximum allowable speeds**

To get on a highway or to pass slower traffic, maximum acceleration may be necessary. Make sure you observe the following maximum allowable speeds in each range:

| range | km/h (mph) |
|---|---|
| 1 | 59 (37) |
| 2 | 106 (66) |
| 3 | 165 (103) |

**NOTICE**

***Do not downshift if you are going faster than the maximum allowable speed for the next lower range.***

When the “S” mode indicator light does not come on even with the selector lever moved to the sequential position, there may be a problem somewhere in the system. Have your vehicle checked/repaired by your Toyota dealer as soon as possible. In this case, you can drive in the same condition as in the “D” position.

**(d) Using engine braking**

To use engine braking, you can downshift the transmission as follows:

- When driving in the “D” position—
  Shift the selector lever to sequential position.

  When driving in the “5” range within the sequential position—
  Move the selector lever down to the “–” side to select the “4” range.

  The transmission will downshift to fourth range and engine braking will be enabled.

  Vehicles with cruise control or dynamic laser cruise control—When the cruise control is being used, engine braking can not be enabled because the cruise control is not cancelled.

For ways to decrease the vehicle speed, see “Cruise control” on page 176 or “Dynamic laser cruise control” on page 179 in this Section.

- Move the selector lever down to the “–” side to select the “3” range. The transmission will downshift to third range when the vehicle speed drops down to or lower than 147 km/h (91 mph), and stronger engine braking will be enabled.
- Move the selector lever down to the “–” side to select the “2” range. The transmission will downshift to second range when the vehicle speed drops down to or lower than 91 km/h (56 mph), and more powerful engine braking than that of the “3” range position will be enabled.
- Move the selector lever down to the “–” side to select the “1” range. The transmission will downshift to first range when the vehicle speed drops down to or lower than 39 km/h (24 mph), and maximum engine braking will be enabled.

**⚠ CAUTION**

**Be careful when downshifting on a slippery surface. Abrupt shifting could cause the vehicle to skid or spin.**

**(e) Backing up**

1. Bring the vehicle to a complete stop.
2. With the brake pedal held down with your foot, shift the selector lever to the “R” position.

***NOTICE***

***Never shift into reverse while the vehicle is moving.***

**(f) Parking**

1. Bring the vehicle to a complete stop.
2. With the brake pedal pressed down, fully depress the parking brake pedal to apply the parking brake securely.
3. With the brake pedal pressed down, shift the selector lever to the “P” position.

**⚠ CAUTION**

**Never attempt to move the selector lever into “P” position under any circumstances while the vehicle is moving. Serious mechanical damage and loss of vehicle control may result.**

**(g) Good driving practice**

- If the transmission repeatedly shifts up and down between third gear and overdrive when climbing a gentle slope, shift the selector lever into sequential position.
- When towing a trailer, in order to maintain engine braking efficiency, do not use overdrive.

**⚠ CAUTION**

**Always keep your foot on the brake pedal while stopped with the engine running. This prevents the vehicle from creeping.**

***NOTICE***

***Always use the brake pedal or the parking brake to hold the vehicle on an upgrade. Do not attempt to hold the vehicle using the accelerator pedal, as this can cause the transmission to overheat.***

**(h) If you cannot shift the selector lever out of "P" position**

If you cannot shift the selector lever from the "P" position even though the brake pedal is depressed, use the shift lock override button. For instructions, see "If you cannot shift automatic transmission selector lever" on page 331 in Section 4.

## Traction control system

**The traction control system automatically helps prevent the spinning of front wheels when the vehicle is started or accelerated on slippery road surfaces.**

When the ignition switch is set at ON, the system automatically turns on.

**⚠ CAUTION**

**Under certain slippery road conditions, full traction of the vehicle and power against front wheels cannot be maintained, even though the traction control system is in operation. Do not drive the vehicle under any speed or maneuvering conditions which may cause the vehicle to lose traction control. In situations where the road surface is covered with ice or snow, your vehicle should be fitted with snow tires or tire chains. Always drive at an appropriate and cautious speed for the present road conditions.**

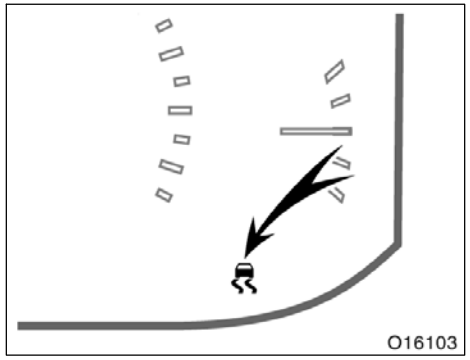


**NORMAL DRIVING MODE**

**Leave the system on during the ordinary driving so that it can operate when needed.**

You may hear a sound in the engine compartment for a few seconds when the engine is started or just after the vehicle begins to move. This means that the traction control system is in the self–check mode, but does not indicate a malfunction.

When the traction control system is operating, the following conditions occur:

- The system controls the spinning of the front wheels. At this time, the slip indicator light blinks.
- You may feel vibration or noise in your vehicle, caused by operation of the brakes. This indicates the system is functioning properly.

The slip indicator light comes on for a few seconds when the ignition switch is set at ON. If the indicator light does not come on when the ignition is turned on, contact your Toyota dealer.

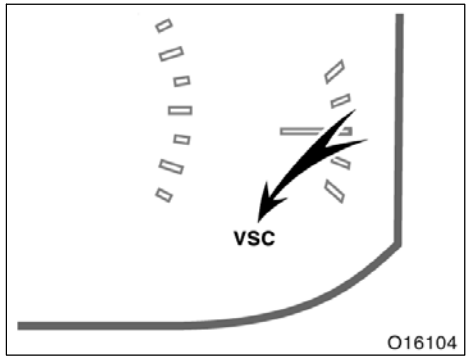


**“VSC” warning light**

This light warns that there is a problem somewhere in the traction control system or the vehicle stability control system.

The light will come on when the ignition switch is set at ON and will go off after a few seconds.

If the light comes on while driving, the system does not work. However, as conventional braking operates when applied, there is no problem to continue your driving.

In the following cases, contact your Toyota dealer:

- The warning light does not come on after the ignition switch is set at ON.
- The warning light remains on after the ignition switch is set at ON.
- The warning light comes on while driving.

## Vehicle stability control system

**The vehicle stability control system helps provide integrated control of the systems such as anti–lock brake system, traction control, engine control, etc. This system automatically controls the brakes and engine to help prevent the vehicle from skidding when cornering on a slippery road surface or operating steering wheel abruptly.**

This system will activate when your vehicle speed reaches or exceeds 15 km/h (9 mph), and will deactivate when the vehicle speed reduces to below 15 km/h (9 mph).

You may hear a sound in the engine compartment for a few seconds when the engine is started or just after the vehicle begins to move. This means that the system is in the self–check mode but does not indicate a malfunction.

**⚠ CAUTION**

- **Do not rely excessively on the vehicle stability control system. Even if the vehicle stability control system is operating, you must always drive carefully and attentively to avoid serious injury. Reckless driving will result in an unexpected accident. If the slip indicator light flashes and an alarm sounds, special care should be taken while driving.**
- **Only use tires of specified size. The size, manufacture, brand and tread pattern for all 4 tires should be the same. If you use the tires other than specified, different type or size, the vehicle stability control system may not function correctly. When replacing the tires or wheels, contact your Toyota dealer. (See “Checking and replacing tires” on page 363 in Section 7–2.)**
- **In situations where the road surface is covered with ice or snow, your vehicle should be fitted with snow tires or tire chains.**

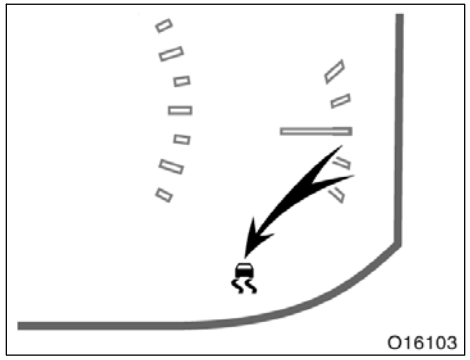


If the vehicle is going to skid during driving, the slip indicator light blinks and an alarm sounds intermittently. Special care should be taken while driving.

The slip indicator light comes on for a few seconds when the ignition switch is set at ON. If the indicator light does not come on when the ignition is turned on, contact your Toyota dealer.

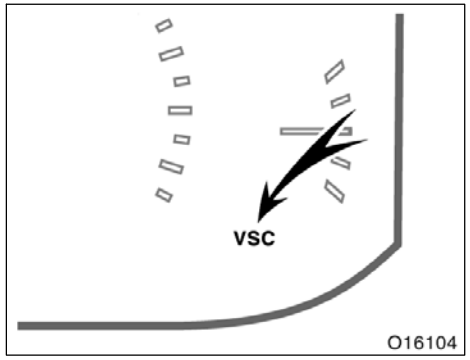


**"VSC" warning light**

This light warns that there is a problem somewhere in the vehicle stability control system or the traction control system.

The light will come on when the ignition switch is set at ON and will go off after a few seconds.

If the light comes on while driving, the system does not work. However, as conventional braking operates when applied, there is no problem to continue your driving.

In the following cases, contact your Toyota dealer:

- The warning light does not come on after the ignition switch is set at ON.
- The warning light remains on after the ignition switch is set at ON.
- The warning light comes on while driving.

## Tire pressure warning system

**The tire pressure warning system warns you that the tire inflation pressure is low.**

The tire pressure warning system is not a substitute for checking normal tire inflation pressure. Check the tire inflation pressure with a tire pressure gauge regularly.

**⚠ CAUTION**

**The warning system may not activate immediately if the tire bursts or sudden air leakage should occur.**

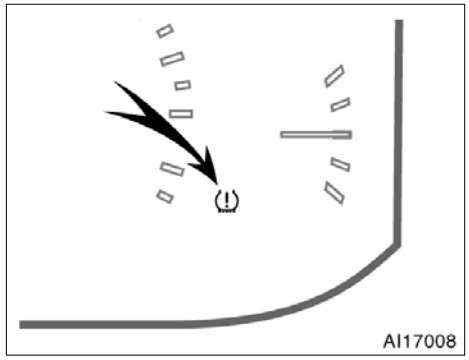


The tire pressure warning light comes on when the ignition switch is set at ON and goes off after a few seconds. This means the tire pressure warning light is operating properly. If the tire inflation pressure becomes low, the light comes on again. In this case, adjusting the tire inflation pressure will turn off the light after a few minutes. If the light comes on after blinking for 1 minute, the tire pressure warning system is not working properly.

| Indicator status | Meanings | Do this |
|---|---|---|
| ON | Tire inflation pressure is low | Adjust the tire inflation pressure |
| ON after blinking for 1 minute | Tire pressure warning system malfunction | Have the system checked at your Toyota dealer |

**⚠ CAUTION**

**If the tire pressure warning light comes on, be sure to observe the following precautions. Failure to do so could cause loss of vehicle control and result in death or serious injury.**

- **Stop your vehicle in a safe place as soon as possible. Adjust the tire inflation pressure immediately.**
- **If the tire pressure warning light comes on even after tire inflation pressure adjustment, it is probable that you have a flat tire. Check the tires. If the tire is flat, change to the spare tire and have the flat tire repaired by the nearest Toyota dealer.**
- **Avoid abrupt maneuvering and braking. If the vehicle tires deteriorate, you could lose control of the steering wheel or the brakes.**

The tire pressure warning light may turn on due to natural causes such as natural air leaks or tire inflation pressure changes caused by temperature. In this case, adjusting the tire inflation pressure will turn off the light after a few minutes.

Pushing the tire pressure warning reset switch should not turn off the tire pressure warning light. Adjusting the tire inflation pressure will turn off the light.

The spare tire (except compact spare tire) is also equipped with the tire pressure warning valve and transmitter. The tire pressure warning light will turn on if the tire inflation pressure of the spare tire is low. If a tire goes flat, even though the flat tire is replaced with the spare tire, the warning light does not turn off. Replace the spare tire with the repaired tire and adjust the proper tire inflation pressure. The tire pressure warning light will turn off after a few minutes.

The compact spare tire is not equipped with the tire pressure warning valve and transmitter. If a tire goes flat, the warning light will not turn off even though the flat tire is replaced with the spare tire. Replace the spare tire with the repaired tire and adjust the proper tire inflation pressure. The tire pressure warning light will turn off after a few minutes.

**⚠ CAUTION**

**Each tire, including the spare (if provided), should be checked monthly when cold and inflated to the inflation pressure recommended by the vehicle manufacturer on the vehicle placard or tire inflation pressure label (tire and load information label). (If your vehicle has tires of a different size than the size indicated on the vehicle placard or tire inflation pressure label (tire and load information label), you should determine the proper tire inflation pressure for those tires.)**

**As an added safety feature, your vehicle has been equipped with a tire pressure monitoring system (TPMS–tire pressure warning system) that illuminates a low tire pressure telltale (tire pressure warning light) when one or more of your tires is significantly under–inflated. Accordingly, when the low tire pressure telltale (tire pressure warning light) illuminates, you should stop and check your tires as soon as possible, and inflate them to the proper pressure. Driving on a significantly under–inflated tire causes the tire to overheat and can lead to tire failure. Under–inflation also reduces fuel efficiency and tire tread life, and may affect the vehicle's handling and stopping ability.**

**Please note that the TPMS (tire pressure warning system) is not a substitute for proper tire maintenance, and it is the driver's responsibility to maintain correct tire pressure, even if under–inflation has not reached the level to trigger illumination of the TPMS low tire pressure telltale (tire pressure warning light).**

***NOTICE***

- ***Do not use liquid sealants for a flat tire as tire pressure warning valve and transmitter will be damaged.***
- ***When the tires must be repaired or replaced, have them repaired or replaced by the nearest Toyota dealer or an authorized tire dealer. The tire pressure warning valves and transmitters will be affected by the installation or removal of tires.***

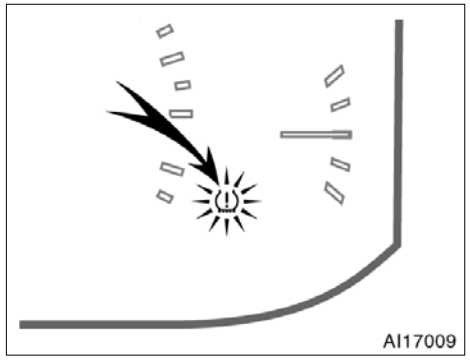


**IF THE TIRE PRESSURE WARNING LIGHT COMES ON AFTER BLINKING FOR 1 MINUTE...**

**If the tire pressure warning light comes on after blinking for 1 minute when the ignition switch is set at ON, the tire pressure warning system is not working properly.**

The system will be disabled in the following conditions:
(When the condition becomes normal, the system will work properly.)

- If tires not equipped with tire pressure warning valves and transmitters are used.

- If the ID code on the tire pressure warning valves and transmitters is not registered.
- If electronic devices or facilities using similar radio wave frequencies are nearby.
- If a radio set at similar frequencies is in use in the vehicle.
- If a window tint that affects the radio wave signals is installed.
- If there is a lot of snow or ice on the vehicle, in particular around the wheels or wheel housings.
- If non–genuine Toyota wheels are used.
- If tire chains are used.
- If the spare tire (except compact spare tire) is in a location subject to poor radio wave signal reception.
- If the tire inflation pressure is more than 500 kPa (5.1 kgf/cm$^2$ or bar, 73 psi).

If the tire pressure warning light comes on after blinking for 1 minute frequently when the ignition switch is set at ON, have the system checked by your Toyota dealer.

Even if you use genuine wheels, the tire pressure warning system may not work properly with some types of tires.

Pushing the tire pressure warning reset switch should not turn off the tire pressure warning light.

**For vehicles sold in U.S.A.**

This device complies with Part 15 of the FCC Rules. Operation is subject to the following two conditions: (1) This device may not cause harmful interference, and (2) this device must accept any interference received, including interference that may cause undesired operation.

NOTICE:
This equipment has been tested and found to comply with the limits for a Class B digital device, pursuant to Part 15 of the FCC Rules. These limits are designed to provide reasonable protection against harmful interference in a residential installation. This equipment generates, uses and can radiate radio frequency energy and, if not installed and used in accordance with the instructions, may cause harmful interference to radio communications. However, there is no guarantee that interference will not occur in a particular installation. If this equipment does cause harmful interference to radio or television reception, which can be determined by turning the equipment off and on, the user is encouraged to try to correct the interference by one or more of the following measures:

—Reorient or relocate the receiving antenna.

—Increase the separation between the equipment and receiver.

—Connect the equipment into an outlet on a circuit different from that to which the receiver is connected.

—Consult the dealer or an experienced radio/TV technician for help.

**FCC WARNING:**
**Changes or modifications not expressly approved by the party responsible for compliance could void the user's authority to operate the equipment.**

**For vehicles sold in Canada**

Operation is subject to the following two conditions: (1) This device may not cause harmful interference, and (2) this device must accept any interference, including interference that may cause undesired operation of the device.

## REPLACING TIRES AND WHEELS

When replacing the tires and wheels, be sure to install tire pressure warning valves and transmitters. ID codes on the tire pressure warning valves and transmitters are registered on the tire pressure warning ECU. When replacing a tire pressure warning valve and transmitter, it is necessary to register the ID code of tire pressure warning valve and transmitter. Have the ID code registered by your Toyota dealer.

If the ID code is not registered, the system will not work properly. After about 1 hour, the tire pressure warning light comes on after blinking for 1 minute to indicate a system malfunction.

**NOTICE**

***When the tires or tire pressure warning valves and transmitters must be replaced, have them replaced by your Toyota dealer. The tire pressure warning valves and transmitters will be affected by the installation or removal of tires.***

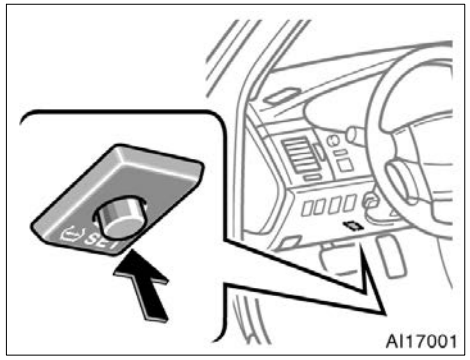


## TIRE PRESSURE WARNING RESET SWITCH

When initializing the system, the present tire inflation pressure is stored as standard. The tire pressure warning system determines decreased air pressure by comparing the present and the standard tire inflation pressures. When you change the set tire inflation pressure, it is necessary to initialize the tire pressure warning system.

- When rotating the tires on vehicles differing with front and rear tire inflation pressures.
- When changing the tire inflation pressure by changing traveling speed or load weight, etc.
- When changing the tire size.

**To initialize the system, perform the following:**

1. Park the vehicle in a safe place and turn the ignition switch off.
2. Adjust the pressure of all the installed tires to the specified cold tire inflation pressure level. (See “Tires” on page 386 in Section 8.)
3. Set the ignition switch to ON.
4. Push and hold the tire pressure warning reset switch until the tire pressure warning light blinks slowly three times.
5. Wait for a few minutes with the ignition switch ON, and then turn the ignition switch off.

If you push the tire pressure reset switch while the vehicle is moving, initialization is not performed.

If you push the tire pressure reset switch accidentally and initialization is performed, adjust the tire inflation pressure to the specified level and initialize the system again.

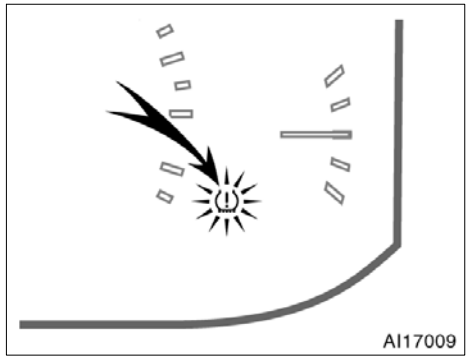


If the tire pressure warning light does not blink slowly three times when you push and hold the reset switch, initialization has failed and the tire pressure warning system may not work properly. In this case, initialize the system again. If initialization cannot be performed, have the system checked at your Toyota dealer.

**⚠ CAUTION**

**Do not push the reset switch without first adjusting the tire inflation pressure to the specified level. Otherwise, the tire pressure warning light may not come on even if the tire inflation pressure is low, or it may come on when the tire inflation pressure is actually normal.**

## Parking brake

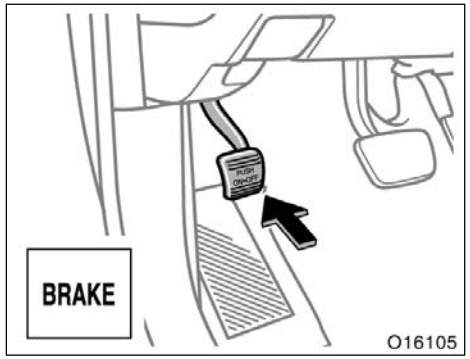


Type A

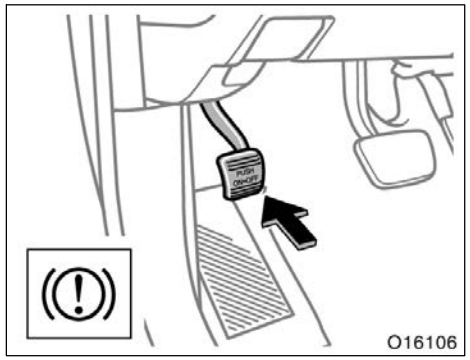


Type B

**When parking, firmly apply the parking brake to avoid inadvertent creeping.**

To set: Fully depress the parking brake pedal. For better holding power, first depress the brake pedal and hold it while setting the parking brake.
To release: Depress the parking brake pedal while depressing the brake pedal.

To remind you that the parking brake is set, the parking brake reminder light in the instrument panel remains on until you release the parking brake.

**⚠ CAUTION**

**Before driving, be sure the parking brake is fully released and the parking brake reminder light is off.**

## Cruise control

**The cruise control allows you to cruise the vehicle at a desired speed over 40 km/h (25 mph) with your foot off the accelerator pedal.**

Your cruising speed can be maintained although a slight speed change may occur when driving up or down gradient, within the limits of engine performance. On steeper hills, a greater speed change will occur so it is better to drive without the cruise control.

**⚠ CAUTION**

- **To help maintain maximum control of your vehicle, do not use the cruise control when driving in heavy or varying traffic, or on slippery (rainy, icy or snow–covered) or winding roads.**

- **Avoid vehicle speed increases when driving downhill. If the vehicle speed is too fast in relation to the cruise control set speed, cancel the cruise control then downshift the transmission to use engine braking to slow down.**

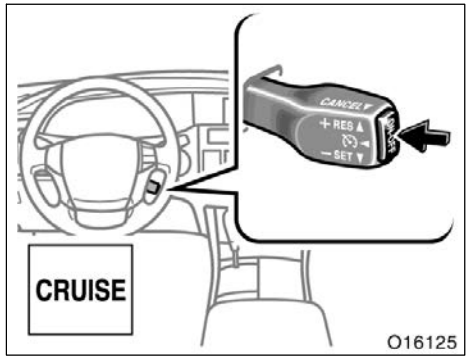


### TURNING THE SYSTEM ON

To operate the cruise control, press the “ON–OFF” button. This turns the system on. The indicator light in the instrument cluster shows that you can now set your desired cruising speed. Another push will turn the system completely off.

When the ignition switch is turned off, the system automatically turned off. To use the cruise control again, press the “ON–OFF” button again to turn it on.

**⚠ CAUTION**

**To avoid accidentally engaging the cruise control, keep the "ON–OFF" button off when not using the cruise control.**

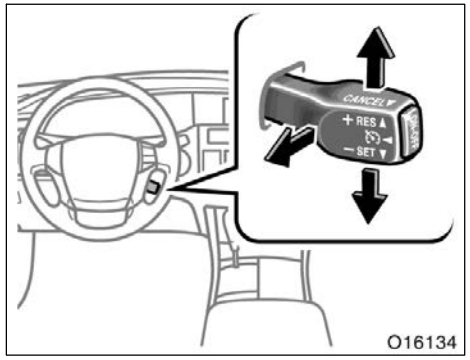


**SETTING AT A DESIRED SPEED**

The transmission must be in the "D" position or the shift range position must be "4" (fourth range) or "5" (fifth range) in "S" mode before you set the cruise control speed.

Bring your vehicle to the desired speed, push the lever down in the "– SET" direction and release it. This sets the vehicle at that speed. If the speed is not satisfactory, tap the lever up for a faster speed, or tap it down for a slower speed. Each tap changes the set speed by 1.6 km/h (1.0 mph). You can now take your foot off the accelerator pedal.

If you need acceleration—for example, when passing—depress the accelerator pedal enough for the vehicle to exceed the set speed. When you release it, the vehicle will return to the speed set prior to the acceleration.

**CANCELLING THE PRESET SPEED**

You can cancel the preset speed by:

a. Pulling the lever in the "CANCEL" direction.

b. Depressing the brake pedal.

c. Pressing the "ON–OFF" button.

If cancelled by c., the "CRUISE" indicator light goes off in the instrument panel. In this case, the present speed data is cleared, and you must set the speed from the beginning.

In the following cases, the preset speed automatically cancels out:

a. When vehicle speed falls below about 40 km/h (25 mph).

b. When vehicle stability control is activated.

c. When vehicle speed drops 16 km/h (10 mph) below the preset speed.

If cancelled by c., the present speed data is cleared, and you must set the speed from the beginning.

If the preset speed automatically cancels out for other than the above reasons, do not operate the cruise control. Although it is no problem to continue driving, have your vehicle checked by your Toyota dealer at the earliest opportunity.

**RESETTING TO A FASTER SPEED**

Push the lever up in the "+ RES" direction and hold it. Release the lever when the desired speed is attained. While the lever is held up, the vehicle will gradually gain speed.

When the difference between the actual vehicle speed and the set speed is less than 5 km/h (3 mph), the set speed can be increased 1.6 km/h (1 mph) each time by pushing the lever up in the "+ RES" direction quickly within 0.5 seconds.

However, a faster way to reset is to accelerate the vehicle and then push the lever down in the "– SET" direction.

**RESETTING TO A SLOWER SPEED**

Push the lever down in the "– SET" direction and hold it. Release the lever when the desired speed is attained. While the lever is held down, the vehicle speed will gradually decrease.

When the difference is 5 km/h (3 mph) or more, the vehicle will cruise with its actual speed. When the difference between the actual vehicle speed and the set speed is less than 5 km/h (3 mph), the set speed can be lowered 1.6 km/h (1 mph) each time by pushing the lever down in the "– SET" direction quickly within 0.5 seconds.

However, a faster way to reset is to depress the brake pedal and then push the lever down in the "– SET" direction.

Even if you downshift the transmission from the "D" position or "5" (fifth range) to "4" (fourth range) in "S" mode with the cruise control on, engine braking will not be enabled because the cruise control is not cancelled. To decrease the vehicle speed, reset to a slower speed with the cruise control lever or depress the brake pedal. If you use the brake pedal, cruise control is cancelled.

**RESUMING THE PRESET SPEED**

If the preset speed is cancelled by pulling the control lever or by depressing the brake pedal or by activating the vehicle stability control system, pushing the lever up in the "+ RES" direction will restore the speed set prior to cancellation.

If the preset speed is cancelled when vehicle speed falls below about 40 km/h (25 mph), the preset speed will be resumed by pushing the control lever up in the "+ RES" direction when vehicle speed exceeds about 40 km/h (25 mph) again.

**CRUISE CONTROL FAILURE WARNING**

If "CRUISE" indicator light in the instrument cluster flashes when using the cruise control, press the "ON–OFF" button to turn the system off and then push it again to turn it on.

If any of the following conditions then occurs, there is some trouble in the cruise control system.

- The indicator light does not come on.
- The indicator light flashes again.
- The indicator light goes out after it comes on.

If this is the case, contact your Toyota dealer and have your vehicle inspected.

## Dynamic laser cruise control—

**Dynamic laser cruise control allows you to drive at a selected cruising speed over about 45 km/h (28 mph) with your foot off the accelerator pedal, maintaining an appropriate vehicle–to–vehicle distance.**

**⚠ CAUTION**

**Do not rely excessively on dynamic laser cruise control in order to avoid serious injury or death, or to prevent accidents or to control the vehicle's speed in emergency situations. Do not use cruise control except in appropriate road and traffic conditions. Always drive carefully and attentively. Before using dynamic laser cruise control, read and understand the following instructions.**

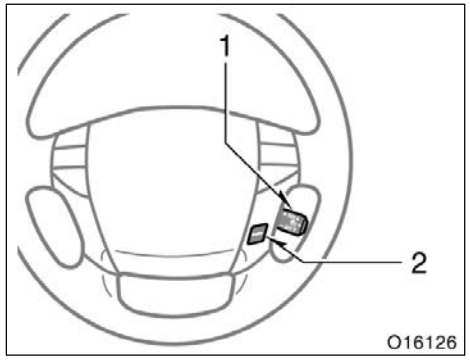


**Steering wheel**

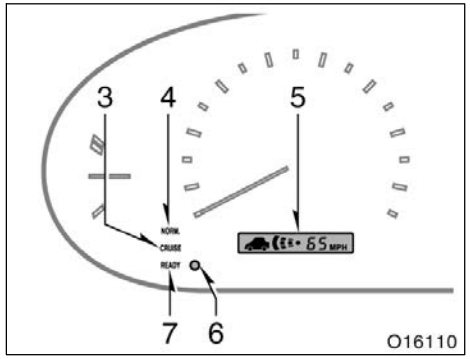


**Instrument cluster**

1. Cruise control switch
2. Distance switch
3. "CRUISE" indicator light
4. "NORM." indicator light (conventional cruise control mode indicator light)
5. Display
6. Master warning light
7. "READY" indicator light (ready mode indicator light)

## —Dynamic laser cruise control modes

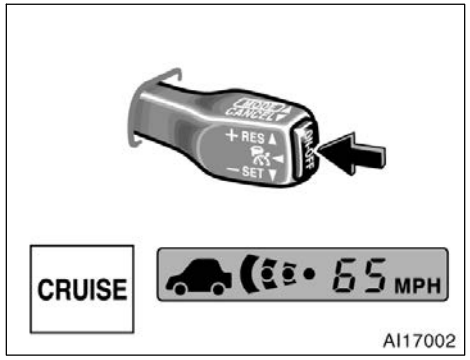


**Vehicle–to–vehicle distance control mode**

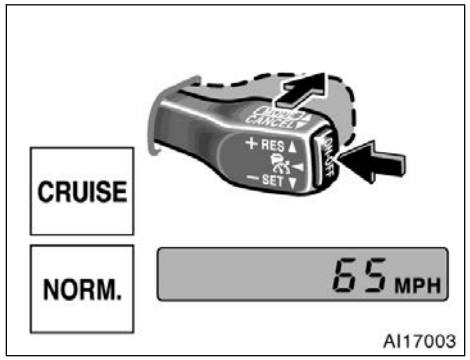


**Conventional (fixed speed) cruise control mode**

**The dynamic laser cruise control function has two cruise control modes.**

- Vehicle–to–vehicle distance control mode for maintaining an appropriate distance between vehicles
- Conventional (fixed speed) cruise control mode for cruising at preset speeds

You can change the mode by using the control lever.

The two cruise control modes function differently. If you use dynamic laser cruise control, always confirm which mode is selected.

For the vehicle–to–vehicle distance control mode, see "—Vehicle–to–vehicle distance control mode" on page 180. For the conventional (fixed speed) cruise control mode, see "—Conventional (fixed speed) cruise control mode" on page 191.

## —Vehicle–to–vehicle distance control mode

**The laser radar sensor in this system primarily detects the reflectors of the vehicle ahead of you to determine the presence of the vehicle ahead as well as measuring the vehicle–to–vehicle distance. The detection range of the sensor is about 120 m (400 ft.) ahead.**

**⚠ CAUTION**

**Dynamic laser cruise control is not a collision–avoidance system and will not prevent accidents. Dynamic laser cruise control is a vehicle speed control device that is intended for use only on freeways or roads where the traffic is light or moderate. To avoid serious injury, you must use caution and be attentive to road and traffic conditions while using dynamic laser cruise control.**

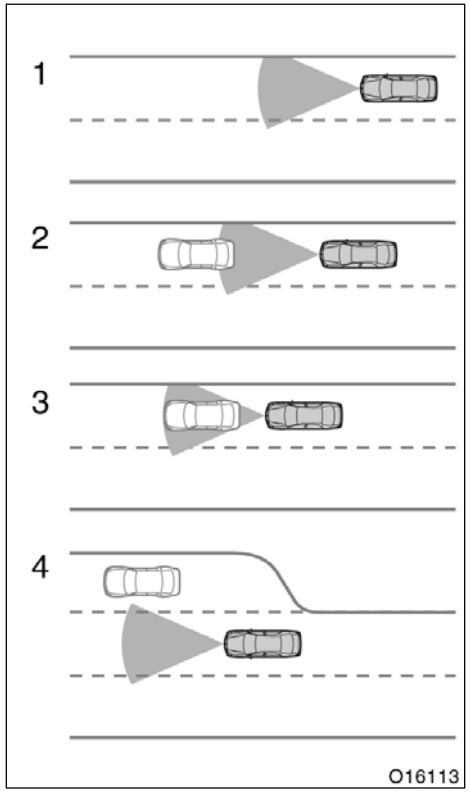


**DYNAMIC LASER CRUISE CONTROL OPERATIONS**

**The dynamic laser cruise control function operates automatically and depending on whether a vehicle is detected ahead may change the speed of your vehicle as follows.**

**If no vehicle is running ahead of you—**

1. **Cruising at a fixed speed:** If there is no vehicle detected ahead, your cruising speed is maintained at the preset speed from about 45 km/h (28 mph) to about 135 km/h (85 mph). The preset speed is displayed in the display. For the vehicle speed setting, see “SETTING THE DESIRED SPEED” on page 185.

**If a vehicle is detected ahead of you—**

2. **Deceleration cruising function:** If a slower moving vehicle is detected ahead of you, your vehicle cruising speed decreases within the range of about 40 km/h (25 mph) to about 135 km/h (85 mph). The display shows the preset speed, the detected vehicle ahead and selected vehicle–to–vehicle distance. If your vehicle gets closer to the vehicle ahead because of insufficient automatic deceleration, then the alarm warns you to also manually apply brakes.
3. **Follow–up cruising function:** After deceleration, your vehicle cruising speed changes in proportion to the speed of the vehicle ahead to maintain an appropriate distance from your vehicle to the vehicle ahead. The vehicle–to–vehicle distance can be changed. For details, see “CHANGING VEHICLE–TO–VEHICLE DISTANCE” on page 187.
4. **Acceleration cruising function:** If the vehicle ahead changes lanes, your vehicle cruising speed will be gradually increased up to the preset speed, and your vehicle resumes fixed–speed cruising.

This system operates by detecting primarily the reflectors of the vehicle ahead. The distance may not be accurately or absolutely detected in the following cases:

- The vehicle ahead has higher ground clearance, which means that the placement of the reflectors is in a higher position.
- The rear section of the vehicle ahead is extremely dirty.
- The vehicle ahead or other vehicles around you are flinging up water or snow.
- Excessive exhaust gas (black smoke) is coming from the vehicle ahead or other vehicles around you, obscuring your front view.
- There is an obstruction (protective film, sticker, etc.) on the reflectors on the vehicle ahead, or reflectors are not installed on the vehicle ahead or are damaged.
- Heavy luggage in the luggage compartment or rear seats is causing the nose of your vehicle to tilt up.

**CAUTION**

To avoid accidents, always keep the laser radar sensor glass clean and never allow it to be covered with icicle or any substance, so it can detect the vehicle in front. (See "LASER RADAR SENSOR" on page 189.)

**CAUTION**

Do not rely excessively on dynamic laser cruise control. Observe the following precautions in order to avoid serious injury or death:

- Under certain conditions where the vehicle in front slows drastically, or is stopped, the dynamic laser cruise control will neither warn you nor decelerate. You must depress the brake pedal to slow down, ensuring collision avoidance or that sufficient vehicle–to–vehicle distance is maintained.
- Do not use dynamic laser cruise control in the following conditions:

  In bad weather (such as rain, fog, snow, sandstorms or direct sunlight, or when raindrops or snowflakes get on the laser radar sensor glass), the vehicle–to–vehicle distance will not be measured accurately.

  When using the windshield wipers at high or low speeds the dynamic laser radar cruise control turns off.

On roads with heavy traffic or sharp bends, an appropriate speed cannot be maintained and an accident may occur.

On slippery road surfaces (icy or snow−covered road surfaces), the tires will race and you will be unable to control the vehicle.

When there is no vehicle detected ahead on steep downhill slopes, the preset speed will be easily exceeded because of inefficient engine braking. (In this case, automatic braking will not work.) If there is a vehicle detected ahead, the delay in deceleration timing could cause serious injury or death.

When the alarm sounds frequently (because acceleration or deceleration was repeated or sufficient vehicle−to−vehicle distance was not maintained), an appropriate vehicle speed cannot be attained and an accident may occur.

On roads with steep and short inclines and declines, failure to detect the vehicle ahead will shorten the distance between your vehicle and the vehicle ahead and an accident may occur.

- Deceleration cruising function and approach warning do not operate when the vehicle ahead is at a stop or driving very slowly.
- If the vehicle ahead of you decelerates abruptly or if another vehicle cuts in ahead of you, your vehicle may collide with the vehicle ahead unless you manually depress the brake pedal to slow down your vehicle.
- Depending on the road configuration (curved, left and right continuous curved, the start or end of a curve, or narrow driving lanes due to road construction) or your vehicle condition (steering wheel maneuvering, position in the lane, or unstable driving because of an accident or breakdown), vehicles in other lanes or surrounding objects may be detected, resulting in a control failure or the approach warning activation. This may also result in a very close distance between vehicles due to a failure to detect the vehicle ahead.

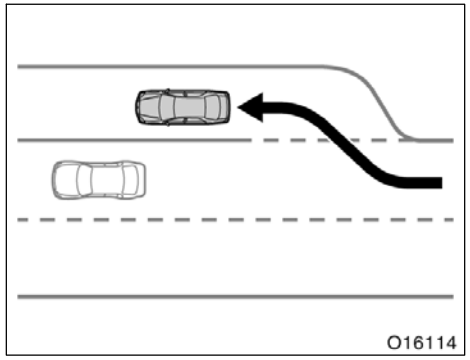


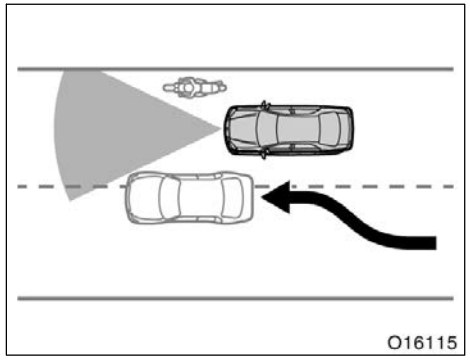


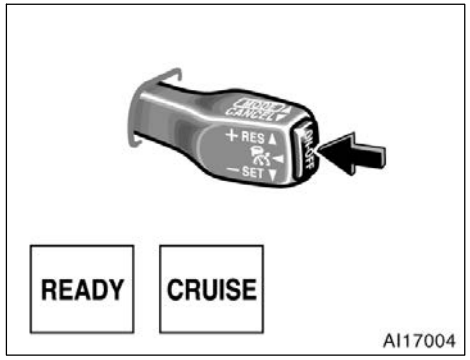


Dynamic laser cruise control should not be used in circumstances which are inappropriate for any cruise control, such as entering free way on–ramps or off–ramps.

**⚠ CAUTION**

- **Do not use dynamic laser cruise control when exiting from or when entering or merging onto a freeway. When you are following a slower moving vehicle and exiting, the sensor does not detect the vehicle and will accelerate to the preset speed.**

- **If other vehicles are driving outside of the laser radar detection range, a delay in the detection of the vehicle cutting in at short range or failure to detect a motorcycle running on the side of the same lane will occur. In this case, the dynamic laser cruise control system will not function properly.**
- **When a slower vehicle in front of you leaves the lane, the dynamic laser cruise control will no longer detect a vehicle ahead and will attempt to accelerate the vehicle to the faster preset speed.**

### TURNING THE SYSTEM ON

To operate dynamic laser cruise control, press the “ON–OFF” button. This turns the system on. When the “CRUISE” and “READY” indicator lights in the instrument cluster come on, you can now set your desired cruising speed and vehicle–to–vehicle distance. Pressing the “ON–OFF” button again will turn the system completely off.

When the ignition is turned off, the system is also automatically turned off. To use dynamic laser cruise control again, press the “ON–OFF” button again to turn it on.

When the ignition is turned off, all the preset data is cleared. When you use the dynamic laser cruise control again, you need to reset the data.

**⚠ CAUTION**

**To avoid accidentally engaging the cruise control, keep the "ON–OFF" button off when not using the dynamic laser cruise control.**

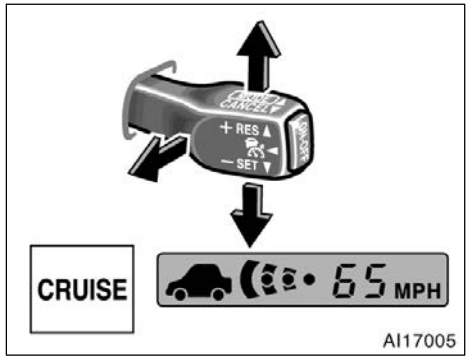


### SETTING THE DESIRED SPEED

The transmission must be in the "D" position or the shift range position must be "4" (fourth range) or "5" (fifth range) in "S" mode before you set the cruise control speed.

Bring your vehicle to the desired speed, push the lever down in the "– SET" direction and release it. This sets the vehicle at that speed. At this time, the display indicates settings such as the preset vehicle speed, whether a vehicle is present ahead and selected vehicle–to–vehicle distance. If there is no vehicle detected ahead, the display does not indicate the vehicle ahead. You can now take your foot off the accelerator pedal.

If you need to accelerate—for example, when passing—depress the accelerator pedal enough for the vehicle to exceed the preset speed. When you release the accelerator pedal, the vehicle will return to the control prior to acceleration.

You cannot set a desired speed if the master warning light comes on, the alarm sounds and the display indicates one of the warning codes "C1", "C2" or "E3". If any of the above codes appears on the display, see "VEHICLE–TO–VEHICLE DISTANCE CONTROL MODE FAILURE WARNING" on page 190.

### CANCELLING THE PRESET SPEED

You can cancel the preset speed by doing any of the following:

a. Pulling the lever in the "CANCEL" direction.

b. Depressing the brake pedal.

c. Pressing the "ON–OFF" button.

If cancelled by a. or b., the "READY" indicator comes on and the dynamic laser cruise control enters the ready mode.

If cancelled by c., the "CRUISE" indicator light goes off in the instrument panel. In this case, the preset speed data is cleared, and you must set the speed from the beginning.

In the following cases, the preset speed automatically cancels out:

a. When vehicle speed falls below about 40 km/h (25 mph).

b. When vehicle stability control is activated.

If cancelled by a. or b., the “READY” indicator comes on and the dynamic laser cruise control enters the ready mode.

If one of the warning codes “C1”, “C2” or “E3” appears on the display, the preset speed automatically cancels out. See “VEHICLE–TO–VEHICLE DISTANCE CONTROL MODE FAILURE WARNING” on page 190.

If the preset speed automatically cancels out for other than the above reasons, do not operate the dynamic laser cruise control. Although there is no problem to continue driving, please contact your Toyota dealer.

### RESETTING TO A FASTER SPEED

Push the lever up in the “+ RES” direction and hold it. The displayed speed will increase in increments of 5 mph. Release the lever when the desired speed is attained. The vehicle speed will gradually increase to the display speed.

**⚠ CAUTION**

**When the vehicle–to–vehicle distance control is on, your cruising speed is regulated in proportion to the speed of the vehicle ahead, so increasing the preset speed using the control lever does not accelerate the vehicle. However, if the vehicle ahead leaves the lane, your cruising speed will increase to the preset speed because the preset speed has been set higher using the control lever. Confirm the setting on the display.**

### RESETTING TO A SLOWER SPEED

Push the lever down in the “– SET” direction and hold it. The displayed speed will decrease in increments of 5 mph. Release the lever when the desired speed is attained. The vehicle speed will gradually decrease to the display speed.

However, a faster way to reset is to depress the brake pedal and then push the lever down in the “– SET” direction.

If the control lever is released when the vehicle speed exceeds the upper limit of the preset speed traveling downhill while you are pushing the lever down, the system will memorize the upper limit of the preset speed as a preset speed.

Even if you downshift the transmission from “D” position or “5” (fifth range) to “4” (fourth range) in “S” mode in the vehicle–to–vehicle distance control mode, engine braking will not be enabled because this mode is not cancelled. To decrease the vehicle speed, reset to a slower speed with the cruise control lever or depress the brake pedal. If you use the brake pedal, cruise control is cancelled.

## RESUMING THE PRESET SPEED

If the preset speed has been cancelled, when you push the lever up in the "+ RES" direction while the "READY" indicator in the instrument cluster comes on at a vehicle speed of more than 40 km/h (25 mph), the speed set prior to cancellation will be restored.

During follow–up cruising, if there are no vehicles ahead because they have changed lanes, your vehicle will accelerate gradually up to the preset speed. At this time, pushing the lever up in the "+ RES" direction will quickly speed up your vehicle in vehicle–to–vehicle distance control mode.

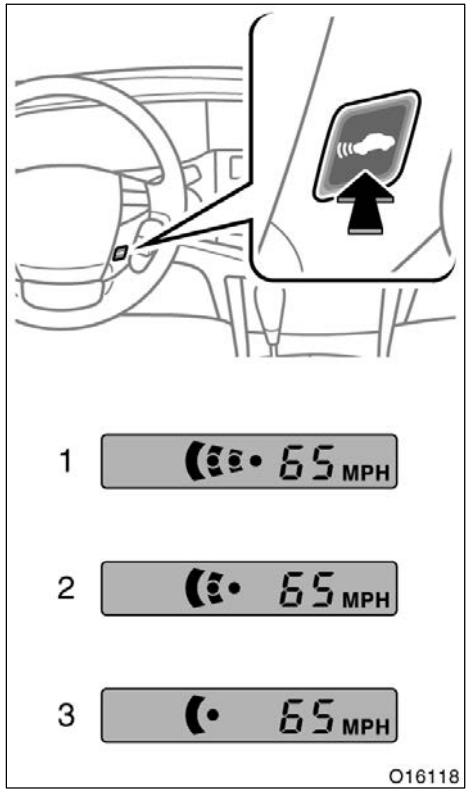


## CHANGING VEHICLE–TO–VEHICLE DISTANCE

You can select one of the following vehicle–to–vehicle distances.

1. LONG
2. MIDDLE
3. SHORT

Each time you push the distance switch briefly, the setting changes from LONG to MIDDLE to SHORT and then back to LONG. You can confirm the setting on the display.

Your vehicle speed changes in proportion to the speed of the vehicle ahead, maintaining the selected distance. However, if the vehicle ahead is slower, the selected distance will be shorter than the designated distance.

When the vehicle–to–vehicle distance control mode is activated or the "READY" indicator comes on, the vehicle–to–vehicle distance setting can be changed.

The vehicle–to–vehicle distance is always set to LONG when the ignition switch is turned on.

Select the vehicle–to–vehicle distance considering traffic conditions. The approximate vehicle–to–vehicle distance based on time interval when driving at 88 km/h (55 mph) is shown below:

LONG ..... about 75 m (245 ft.)
MIDDLE ..... about 50 m (165 ft.)
SHORT ..... about 30 m (100 ft.)

If the vehicle speed is slower than 88 km/h (55 mph), the distance will be shorter than the above.

During long downhill driving, the vehicle–to–vehicle distance will be shorter than the selected distance.

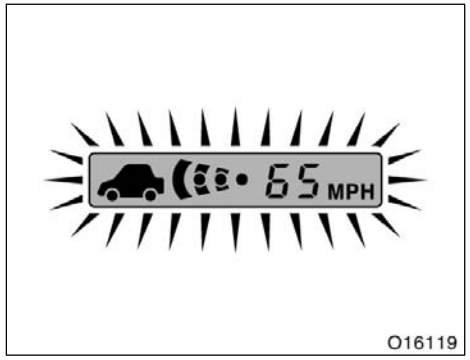


## BRAKING CONTROL

Dynamic laser cruise control is not a collision avoidance system. If the approach warning is activated, depress the brake pedal to decelerate to ensure an appropriate vehicle–to–vehicle distance.

If you are getting closer to the vehicle ahead at a relatively higher speed than that of the vehicle ahead or if engine braking cannot be applied properly, braking control is automatically activated. At this time, the display flashes.

Braking control is operating only when the vehicle–to–vehicle distance control mode is selected and your vehicle speed exceeds about 40 km/h (25 mph). If the speed decreases below about 40 km/h (25 mph), braking control will cease, requiring the manual application of brakes.

**⚠ CAUTION**

**Braking control will not ensure that your vehicle will reduce speed appropriately. You must depress the brake pedal to slow down, ensuring collision avoidance or that sufficient vehicle–to–vehicle distance is maintained.**

## APPROACH WARNING

While you are cruising in the vehicle–to–vehicle distance control mode, if the vehicle ahead decelerates abruptly or if another vehicle cuts in ahead of you, inadequate braking will make your vehicle become closer to the vehicle ahead of you and the display will flash and beep.

**CAUTION**

- **If the display flashes and beeps, you must depress the brake pedal to slow down to avoid a collision or maintain sufficient vehicle–to–vehicle distance.**
- **In the following conditions, the approach warning may not turn on even if the vehicle drives closer to the vehicle ahead, and an accident may occur:**

  **Your vehicle and the vehicle ahead are cruising at almost the same speed.**

  **The vehicle ahead is cruising at a faster speed than yours. (The distance between the vehicles will become longer.)**

  **The vehicle ahead is at a stop or driving very slowly. Pay special attention to a very slow vehicle at the end of the line in heavy traffic or at a tollgate.**

  **The speed has just been set.**

  **The accelerator pedal is depressed or has just been released.**

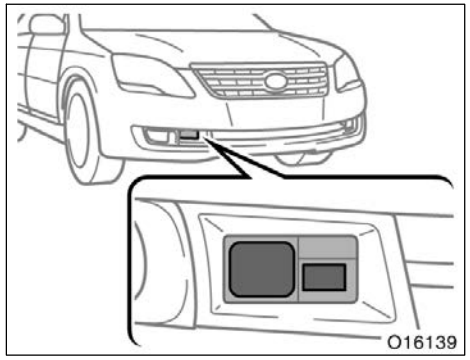


**LASER RADAR SENSOR**

**The laser radar sensor is used for vehicle–to–vehicle distance control cruising.**

**If dirt is on the sensor glass, the dynamic laser cruise control function is automatically cancelled and a warning code appears on the display. (See "VEHICLE–TO–VEHICLE DISTANCE CONTROL MODE FAILURE WARNING" described below.)**

**However, if the glass sensor is covered with icicle or any substance, dirt may not be detected.**

**Before driving in the vehicle–to–vehicle distance control mode, make sure the radar sensor glass is clean.**

This product is a class I laser product complied with 21 C.F.R part 1040.10 and 1040.11.

**CAUTION**

**To ensure that dynamic laser cruise control will function properly while driving, observe the following:**

- **Always keep the laser radar sensor glass clean. When cleaning, use a soft cloth and be careful not to damage the sensor.**
- **Avoid strong impacts around the laser radar sensor. An incorrect laser radar sensor alignment will result in system malfunction. A special device is required to adjust the laser radar sensor alignment. Be sure to have the sensor adjusted by your Toyota dealer.**
- **Do not affix a sticker (including a transparent sticker) or attach an accessory around the laser radar sensor.**

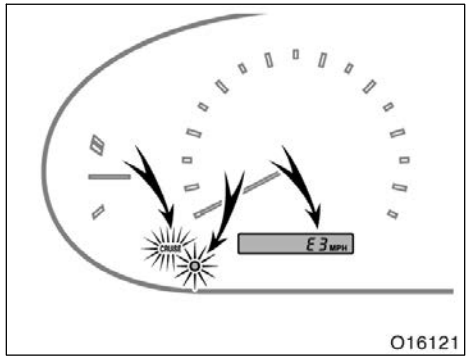


**VEHICLE–TO–VEHICLE DISTANCE CONTROL MODE FAILURE WARNING**

If there is trouble somewhere in the dynamic laser cruise control while the vehicle–to–vehicle distance control mode is on, the master warning light comes on and the alarm sounds, and one of the warning codes “C1”, “C2” or “E3” will appear on the display. Dynamic laser cruise control is automatically cancelled.

If “E3” appears on the display, the “CRUISE” indicator light in the instrument cluster also flashes.

**If “C1” appears on the display,** the system cannot easily measure the vehicle–to–vehicle distance because of a dirty laser radar sensor glass while the dynamic laser cruise control is on.

If this code appears, clean the sensor glass with a soft cloth and try setting the preset speed again. If the dirt is removed without cleaning, the system will automatically enter the ready mode.

If the system does not enter the ready mode even after cleaning or the code remains on the display, the system might be malfunctioning. Although there is no problem to continue driving, please contact your Toyota dealer.

**⚠ CAUTION**

**Always keep the sensor glass and never allow it to be covered with icicle or any substance, so it can detect the vehicle in front.**

**If “C2” appears on the display,** the system cannot easily measure the vehicle–to–vehicle distance because of the following conditions:

- The wipers are operating at high or low speeds
- Direct sunlight from the front
- It is difficult to make a measurement because of bad weather (such as rainy, foggy, or snowy weather)

In the following cases, dynamic laser cruise control switches to the ready mode:

- The wipers are stopped or are switched to intermittent operation.
- No direct sunlight from the front

In the above conditions, push the lever up in the “+ RES” direction and release it. Dynamic laser cruise control will be restored. If the setting operation cannot be performed or if the warning code still appears even after the weather clears, the system might have malfunctioned. Although there is no problem to continue driving, please contact your Toyota dealer.

**If "E3" appears on the display,** a system malfunction has been detected.

If this code appears, stop your vehicle in a safe place, turn the ignition off, and then restart it to reset the system. If the setting still cannot be made or the same code appears again, the system might have malfunctioned. Although there is no problem to continue driving, please contact your Toyota dealer.

## —Conventional (fixed speed) cruise control mode

**This mode allows you to cruise at a desired speed over about 40 km/h (25 mph) with your foot off the accelerator pedal.**

Your cruising speed can be maintained up or down grades within the limits of engine performance, although a slight speed change may occur when driving up or down the grades. On steeper hills, a greater speed change will occur so it is better to drive without the cruise control.

**⚠ CAUTION**

- **In the conventional (fixed speed) cruise control mode, the approach warning does not activate and no alarm will sound even if you are too close to the vehicle ahead, as neither the presence of the vehicle ahead nor the vehicle–to–vehicle distance is detected. Pay special attention to the distance between your vehicle and the vehicle ahead. Always confirm the setting in the display.**

- **Do not use the conventional (fixed speed) mode in the following conditions, or serious injury or death could result:**

  **To help maintain maximum control of your vehicle, do not use conventional cruise control mode when using dynamic laser cruise control while driving in heavy or varying traffic, or on slippery (rainy, icy or snow–covered) or winding roads.**

  **Avoid vehicle speed increasing when driving downhill. If the vehicle speed is too fast in relation to the preset speed in the conventional cruise control mode, cancel the conventional cruise control mode and then downshift the transmission to use engine braking to slow down.**

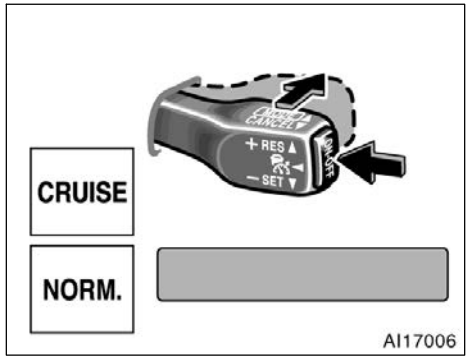


### TURNING THE SYSTEM ON

To operate conventional cruise control mode, press the “ON–OFF” button. This turns the system on. The “CRUISE” and “READY” indicator lights in the instrument cluster comes on. Push the lever in the “MODE” direction for longer than 1 second to change to conventional cruise control mode. The indicator in the instrument cluster is as shown. You can now set your desired cruising speed. Pressing the “ON–OFF” button again will turn the system completely off.

However, once the vehicle–to–vehicle distance control mode activates and is used, it cannot be changed to the conventional cruise control mode using the above operation. To change the mode, press the “ON–OFF” button to turn the system off and then press it again to turn it on. Next push the lever in the “MODE” direction for longer than about 1 second.

To change to the vehicle–to–vehicle distance control mode from the conventional cruise control mode, push the lever in the “MODE” direction for longer than about 1 second.

**⚠ CAUTION**

**To avoid accidentally engaging the cruise control, keep the “ON–OFF” button off when not using dynamic laser cruise control.**

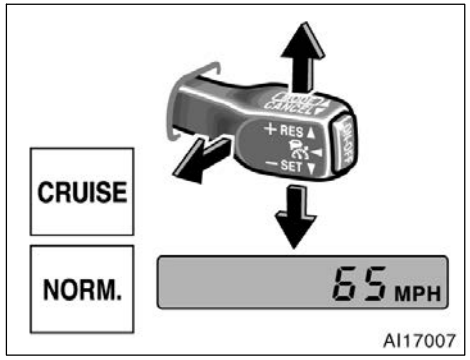


### SETTING THE DESIRED SPEED

The transmission must be in the “D” position, “5” (fifth range) or “4” (fourth range) in “S” mode before you set the cruise control speed in the conventional cruise control mode.

Bring your vehicle to the desired speed, push the lever down in the “– SET” direction and release it. This sets the vehicle at that speed and the display shows the preset speed. You can now take your foot off the accelerator pedal.

If you need to accelerate—for example, when passing—depress the accelerator pedal enough for the vehicle to exceed the preset speed. When you release the accelerator pedal, the vehicle will return to the speed set prior to acceleration.

You cannot set a desired speed if the master warning light comes on, the alarm sounds and the display indicates the warning code “E3”. If this code appears on the display, see “VEHICLE–TO–VEHICLE DISTANCE CONTROL MODE FAILURE WARNING” on page 190.

**CANCELLING THE PRESET SPEED**

You can cancel the preset speed by doing any of the following:

a. Pulling the lever in the “CANCEL” direction.

b. Depressing the brake pedal.

c. Pressing the “ON–OFF” button.

If cancelled by c., the “CRUISE” indicator light goes off in the instrument panel. In this case, the preset speed data is cleared, and you must set the speed from the beginning.

In the following cases, the preset speed automatically cancels out:

a. When vehicle speed falls below about 40km/h (25 mph).

b. When vehicle speed drops 16 km/h (10 mph) below the preset speed.

c. When vehicle stability control is activated.

If cancelled by b., the preset speed data is cleared and you must set the speed from the beginning.

If the preset speed automatically cancels out for other than the above reasons, do not operate the cruise control. Although it is no problem to continue driving, have your vehicle checked by your Toyota dealer at the earliest opportunity.

**RESETTING TO A FASTER SPEED**

Push the lever up in the “+ RES” direction and hold it. Release the lever when the desired speed is attained. While the lever is held up, the vehicle will gradually gain speed.

When the difference between the actual vehicle speed and the set speed is less than 5 km/h (3 mph), the set speed can be increased 1.6 km/h (1 mph) each time by pushing the lever up in the “+ RES” direction quickly within 0.6 seconds.

However, a faster way to reset is to accelerate the vehicle and then push the lever down in the “– SET” direction.

**RESETTING TO A SLOWER SPEED**

Push the lever down in the “– SET” direction and hold it. Release the lever when the desired speed is attained. While the lever is held down, the vehicle speed will gradually decrease.

When the difference between the actual vehicle speed and the set speed is less than 5 km/h (3 mph), the set speed can be lowered 1.6 km/h (1 mph) each time by pushing the lever down in the “– SET” direction quickly within 0.6 seconds.

However, a faster way to reset is to accelerate the vehicle and then push the lever down in the "– SET" direction.

Even if you downshift from "D" position or "5" (fifth range) to "4" (fourth range) in "S" mode in the conventional cruise control mode, engine braking will not be enabled because this mode is not cancelled. To decrease the vehicle's speed, reset to a slower speed with the cruise control lever or depress the brake pedal. If you use the brake pedal, cruise control is cancelled.

**RESUMING THE PRESET SPEED**

If the preset speed is cancelled by pulling the lever, by depressing the brake pedal or by activating the vehicle stability control system, pushing the lever up in the "+ RES" direction will restore the speed set prior to cancellation.

If the preset speed is cancelled when vehicle speed falls below about 40 km/h (25 mph), the preset speed will be resumed by pushing the control lever up in the "+ RES" direction when vehicle speed exceeds about 40 km/h (25 mph) again.

**CONVENTIONAL CRUISE CONTROL MODE FAILURE WARNING**

If there is trouble in the conventional cruise control mode, the "CRUISE" indicator light in the instrument cluster flashes, the master warning light comes on and the alarm sounds, the warning code "E3" will appear on the display.

If a system malfunction is detected when the conventional cruise control mode is in the ready mode or operating, the master warning light comes on, an alarm sounds and the above code appears.

If this code appears, press the "ON–OFF" button to turn the system off and then push it again to turn it on. If the setting still cannot be made or the same code appears again, the system might have malfunctioned. Although there is no problem to continue driving, please contact your Toyota dealer.

# SECTION 1–8

## OPERATION OF INSTRUMENTS AND CONTROLS

### Audio system

Reference . . . . . 196
Using your audio system . . . . . 197
Audio remote controls . . . . . 221
Audio system operating hints . . . . . 222

For information about the speech command system of a vehicle equipped with navigation system, please refer to the separate “Navigation System Owner’s Manual”.

## Reference

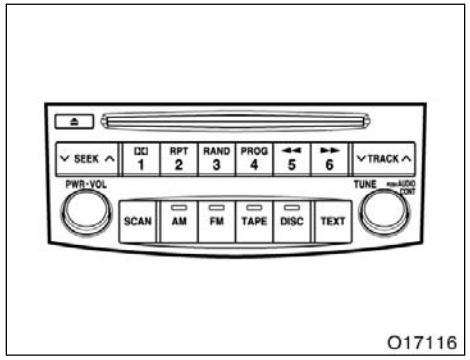


**Type 1: AM·FM radio/compact disc player (with cassette player controller)**

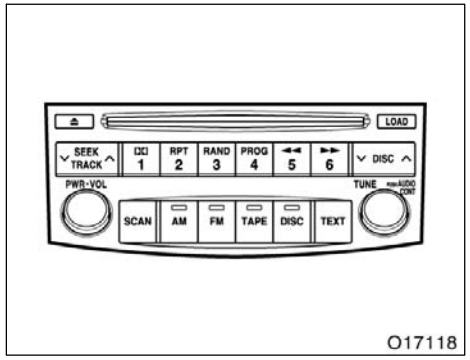


**Type 2: AM·FM radio/compact disc player with changer (with cassette player controller)**

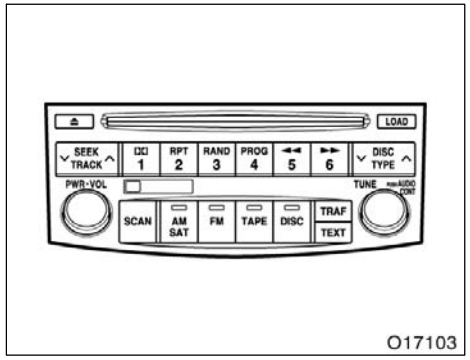


**Type 3: AM·FM radio/compact disc player with changer (with cassette player and XM® satellite radio* controller)**

*: Use of satellite radio requires XM® tuner and service. Contact your Toyota dealer for details.

## Using your audio system——Some basics

This section describes some of the basic features on Toyota audio systems. Some information may not pertain to your system.

Your audio system works when the ignition switch is set at ACC or ON.

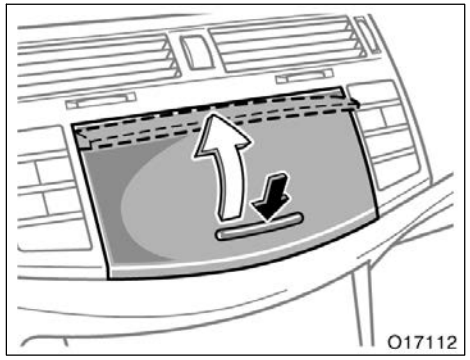


**OPENING THE AUDIO COVER**

Push the button to open the audio cover.

**TURNING THE SYSTEM ON AND OFF**

Push “PWR·VOL” to turn the audio system on and off.

Push “AM”, “AM/SAT”*, “FM”, “TAPE” or “DISC” to turn on that function without pushing “PWR·VOL”.

You can turn on each player by inserting a cassette tape or compact disc.

You can turn off each player by ejecting the cassette tape or compact disc. If the audio system was previously off, then the entire audio system will be turned off when you eject the cassette tape or compact disc. If another function was previously playing, it will come on again.

*: Use of satellite radio requires XM® tuner and service. Contact your Toyota dealer for details.

**SWITCHING BETWEEN FUNCTIONS**

Push “AM”, “AM/SAT”*, “FM”, “TAPE” or “DISC” if the system is already on but you want to switch from one function to another.

*: Use of satellite radio requires XM® tuner and service. Contact your Toyota dealer for details.

## LISTENING TO THE XM® SATELLITE RADIO BROADCAST* (type 3)

To listen to a satellite radio broadcast in your vehicle, an additional genuine Toyota satellite receiver and antenna (or equivalents) must be purchased and installed. A subscription to the XM® satellite radio service is also necessary.

### How to subscribe to an XM® satellite radio

An XM® satellite radio is a tuner designed exclusively to receive broadcasts provided under a separate subscription. Availability is limited to the 48 contiguous states.

How to subscribe:
You must enter into a separate service agreement with the XM® radio in order to receive satellite broadcast programming in the vehicle. Additional activation and service subscription fees apply that are not included in the purchase price of the vehicle and optional digital satellite tuner. For complete information on subscription rates and terms, or to subscribe to the XM® radio, visit XM® on the web at www.xmradio.com or call an XM®'s Listener Care at (800) 967–2346. The XM® radio is solely responsible for the quality, availability and content of the satellite radio services provided, which are subject to the terms and conditions of the XM® radio customer service agreement.

Customers should have their radio ID ready; the radio ID can be found by tuning to "channel 000" on the radio. For details, see "Displaying the radio ID" below.

All fees and programming are the responsibility of the XM® satellite radio and are subject to change.

Satellite tuner technology notice:
Toyota's satellite radio tuners are awarded Type Approval Certificates from XM® Satellite Radio Inc. as proof of compatibility with the services offered by the XM® satellite radio.

### Displaying the radio ID

Each XM® tuner is identified with a unique radio ID. You will need the radio ID when activating XM® service or when reporting a problem.

If you select the "CH 000" using the "TUNE" knob, the ID code of 8 alphanumeric characters appears. If you select another channel, display of the ID code is canceled. The channel (000) alternates the display between the radio ID and the specific radio ID code.

*: Use of satellite radio requires XM® tuner and service. Contact your Toyota dealer for details.

## TONE AND BALANCE

For details about your system's tone and balance controls, see the description of your own system.

Type 1 and type 2 audio systems utilize FOCUS® and TruBass® audio enhancement technologies, under license from SRS Labs, Inc., in all mode except AM radio mode.

### Tone

How good an audio program sounds to you is largely determined by the mix of the treble, midrange (type 3 only), and bass levels. In fact, different kinds of music and vocal programs usually sound better with different mixes of treble, midrange and bass.

### Balance

A good balance of the left and right stereo channels and of the front and rear sound levels is also important.

Keep in mind that if you are listening to a stereo recording or broadcast, changing the right/left balance will increase the volume of one group of sounds while decreasing the volume of another.

## YOUR RADIO ANTENNA

Your vehicle has an antenna printed on the inside of the rear window.

**NOTICE**

***Putting a film (especially a conductive or metallic film) on the rear window will noticeably reduce the sensitivity of the radio.***

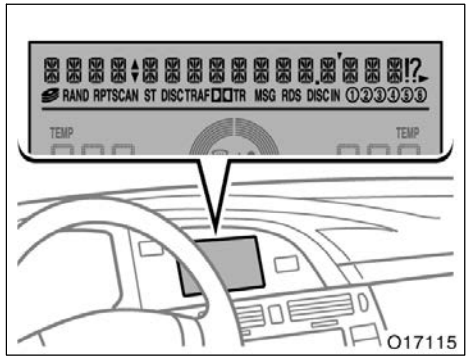


## YOUR AUDIO DISPLAY

The audio information is displayed on the center display.

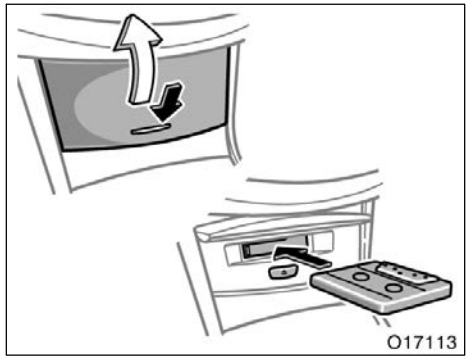


## YOUR CASSETTE PLAYER

Push the button to open the cover for the cassette player.

When you insert a cassette, the exposed tape should face to the right.

Push the "⏏" button to eject a cassette.

For instruction the player, see "—Controls and features" described below.

**NOTICE**

***Never try to disassemble or oil any part of the cassette player. Do not insert anything other than cassette tapes into the slot.***

## YOUR COMPACT DISC PLAYER (type 1)

When you insert a disc, gently push it in with the label side up. The player will play from track 1 through to the end of the disc. Then it will play from track 1 again.

The player is intended for use with 12 cm (4.7 in.) discs only.

**NOTICE**

***Never try to disassemble or oil any part of the compact disc player. Do not insert anything other than compact discs into the slot.***

## YOUR COMPACT DISC PLAYER WITH CHANGER (type 2 and 3)

When you insert a disc, push the "LOAD" button and gently push the disc in with the label side up. The player will play from track 1 through to the end of the disc. Then it will play from track 1 of the next disc.

The changer is intended for use with 12 cm (4.7 in.) discs only.

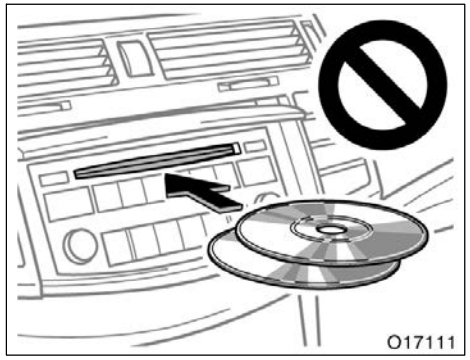


**NOTICE**

- ***Do not stack up two discs for insertion, or it will cause damage to the compact disc changer. Insert only one compact disc into slot at a time.***
- ***Never try to disassemble or oil any part of the compact disc player. Do not insert anything other than compact discs into the slot.***

## —Controls and features

▶Type 1

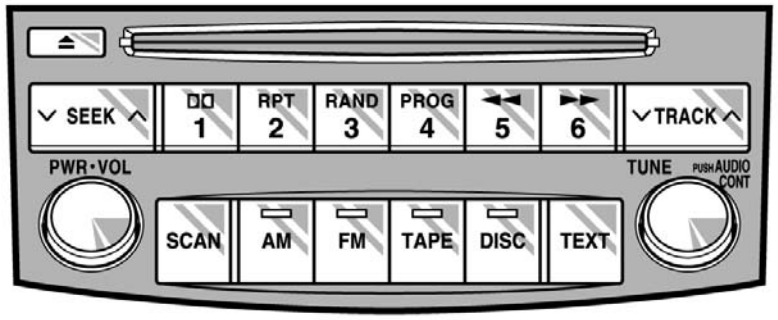


O17117y

Details of specific buttons, controls, and features are described in the alphabetical list that follows.

**1 2 3 4 5 6 (Preset buttons)**

These buttons are used to preset and tune in radio stations.

To preset a station to a button: Tune in the desired station. (See “TUNE” or “SEEK”.) Push and hold down the button until you hear a beep—this will set the station to the button. The preset button number will appear on the display.

To recall a preset station: Push the button for the station you want. The preset button number and station frequency will appear on the display.

This radio can store one AM and two FM for each button. (The display will show “AM”, “FM1” or “FM2” when you push “AM” or “FM” button.)

**⏏ (Eject button)**

This button is used to eject a compact disc.

**◀◀/▶▶ (Reverse/Fast−forward button)**

**Cassette player**

Push “▶▶” (preset button 6) to fast−forward a cassette tape. “FF” will appear on the display. Push “◀◀” (preset button 5) to rewind a tape. “REW” will appear on the display.

To stop the tape while it is fast−forwarding, push “▶▶” or “TAPE” button. To stop the tape while it is rewinding, push “◀◀” or “TAPE” button.

If a tape rewinds completely, the cassette player will stop and then play that same side. If a tape fast−forwards completely, the cassette will play the other side of the tape using the auto−reverse feature.

**Compact disc player**

Push and hold “▶▶” (preset button 6) or “◀◀” (preset button 5) to fast−forward or reverse within a compact disc. When you release the button, the compact disc player will resume playing.

**AM**

Push the “AM” button to turn on the radio and select the AM band. The indicator light will come on and “AM” will appear on the display.

**AUDIO CONT (Tone and sound balance adjustment function)**

Each time you push the “AUDIO CONT” knob, the mode changes. To adjust the tone and balance, turn the knob.

BAS: Adjusts low−pitched tones. The display ranges from −5 to 5.

TRE: Adjusts high−pitched tones. The display ranges from −5 to 5.

FAD: Adjusts the sound balance between the front and rear speakers. The display ranges from F7 to R7.

BAL: Adjusts the sound balance between the right and left speakers. The display ranges from L7 to R7.

**DISC (Compact disc)**

Push the “DISC” button to play a compact disc. The indicator light will come on.

When the audio system is set into compact disc operation, the display shows the track, or track and disc number currently being played.

### Error messages

If the player malfunctions, your audio system will display following error messages.

**"WAIT":** The compact disc player unit may be too hot. Allow the player to cool down.

**"ERROR 1":** The disc may be dirty, damaged or inserted incorrectly (up–side down). Clean the disc and re–insert it.

**"NO DISC":** The compact disc changer of separate unit is empty. Insert a disc.

**"ERROR 4":** Over–current. Ask your Toyota dealer to inspect.

**If the malfunction still exists,** take your vehicle to your Toyota dealer.

### Dolby® DD B NR*

If you are listening to a tape that was recorded with Dolby® B Noise Reduction, push "DD" (preset button 1). "DD" will appear on the display. Push the button again to turn off Dolby® B NR.

The Dolby NR mode reduces tape noise by about 10 dB. For best sound reproduction, play your tapes with this button on or off according to the mode used to record the tape.

*: Dolby noise reduction manufactured under license from Dolby Laboratories Licensing Corporation. "DOLBY" and the double D symbol DD are trademarks of Dolby Laboratories Licensing Corporation.

### FM

Push the "FM" button to turn on the radio and select the FM band. The indicator light will come on and "FM1" or "FM2" will appear on the display. This system allows you to set twelve FM, two for each of the preset button.

### PROG (Program)

Push "PROG" (preset button 4) to select the other side of a cassette tape. The display indicates which side is currently selected ("▲" indicates the top side, "▼" indicates the bottom side).

Auto–reverse feature: After the cassette player reaches the end of a tape side, it automatically reverses and begins to play the other side. This is true whether the cassette was playing or fast forwarding.

### PWR·VOL (Power and Volume)

Push "PWR·VOL" to turn the audio system on and off. Turn "PWR·VOL" to adjust the volume.

### RAND (Random)

Push "RAND" (preset button 3) to listen the tracks on the disc in random order. "RAND" will appear on the display and the player will perform the tracks on the disc you are listening to in random order. To turn off the random feature, push this button again.

**RPT (Repeat)**

**Cassette player**

Push “RPT” (preset button 2) while the track is playing. “RPT” will appear on the display. When the track ends, it will automatically rewind and replay. To turn off the repeat feature, push this button again.

There must be at least 3 seconds of blank space between tracks in order for the repeat feature to work correctly.

**Compact disc player**

Push “RPT” (preset button 2) while the track is playing. “RPT” will appear on the display. When the track ends, it will automatically replay. To turn off the repeat feature, push this button again.

**SCAN**

**Radio**

You can either scan all the frequencies on a band or scan only the preset stations for that band.

To scan the preset stations:
Push and hold the “SCAN” button until you hear a beep. The radio will tune in the next preset station up the band, stay there for 5 seconds, and then move to the next preset station. To stop scanning, push this button again.

To scan all the frequencies:
Quickly push and release the “SCAN” button. The radio will find the next station up the station band, stay there for 5 seconds, and then scan again to the next station. To stop scanning, push this button again.

**Compact disc player**

Push the “SCAN” button to scan the tracks on a disc. “SCAN” will appear on the display and the player will scan all the tracks on the disc you are listening to. To stop scanning, push this button again. If the player has scanned all the tracks on the disc, it will stop scanning.

**SEEK (Seeking)**

**Radio**

In the seek mode, the radio finds and plays the next station up or down the station band.

To seek the next station, quickly push and release “∧” or “∨” side of the “SEEK/TRACK” button. Do this again to find the station after that.

**Cassette player**

Use this button to skip up or down to locate a song or recording.

You can select up to nine recordings (including current one).

A blank space of at least 3 seconds is considered to be a start of a recording.

When the beginning of a tape is reached, the player automatically resumes play.

When the end of the tape is reached, the player automatically reverses sides and resumes normal play.

In addition, the feature may not work well with some spoken word, live, or classical recordings.

**ST (Stereo reception) display**

Your radio automatically changes to stereo reception when a stereo broadcast is received. “ST” appears on the display. If the signal becomes weak, the radio reduces the amount of channel separation to prevent the weak signal from creating noise. If the signal becomes extremely weak, the radio switches from stereo to mono reception.

**TAPE**

Push the “TAPE” button to play a cassette tape. The indicator light will come on.

**TEXT**

This button is used to change the display for the compact disc that contains text data.

To change the display, quickly push and release the “TEXT” button while the compact disc is playing. The display changes in the order from the elapsed time to disc title to track title, then back to the elapsed time.

If this button is pushed while a compact disc that does not contain text data is playing, “NO TITLE” will appear on the display.

If the entire disc or track title does not appear on the display, push and hold the button until you hear a beep. The rest of the title will appear.

**TRACK (Tracking up/down)**

Use this button to skip up or down to a different track.

Push “∧” or “∨” side of the “TRACK” button until the number of the track you want to listen to appears on the display. If you want to return to the beginning of the current track, quickly push the down side of the button one time.

**TUNE (Tuning)**

Turn the “TUNE” knob clockwise to step up the frequency. Turn the knob counter-clockwise to step down the frequency.

▶**Type 2**

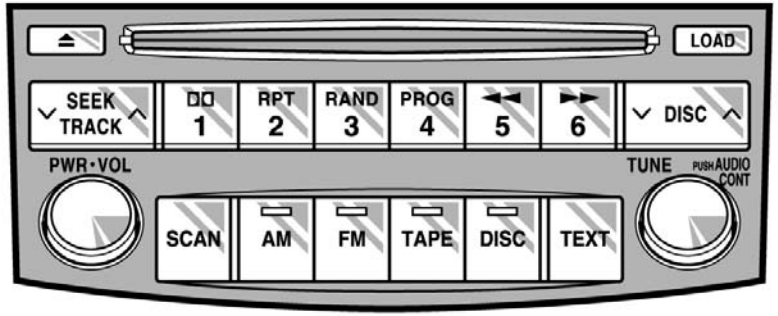


O17119y

Details of specific buttons, controls, and features are described in the alphabetical list that follows.

**1 2 3 4 5 6 (Preset buttons)**

These buttons are used to preset and tune in radio stations.

To preset a station to a button: Tune in the desired station. (See “TUNE” or “SEEK/TRACK”.) Push and hold down the button until you hear a beep—this will set the station to the button. The preset button number will appear on the display.

To recall a preset station: Push the button for the station you want. The preset button number and station frequency will appear on the display.

This radio can store one AM and two FM for each button. (The display will show “AM”, “FM1” or “FM2” when you push “AM” or “FM” button.)

**⏏ (Eject button)**

This button is used to eject one or all compact discs.

To eject the current compact disc, push and release the compact disc eject button.

To eject a specific disc, push “∨” or “∧” side of the “∨ DISC ∧” button until the number of the disc you want to eject is displayed. Push and release the eject button.

To eject all discs at a time, press and hold the eject button until you hear a beep. The last compact disc played before pushing the button will be ejected first. If the ejected disc is not removed for a long time, the eject function will be cancelled.

**◀◀/▶▶ (Reverse/Fast–forward button)**

**Cassette player**

Push “▶▶” (preset button 6) to fast–forward a cassette tape. “FF” will appear on the display. Push “◀◀” (preset button 5) to rewind a tape. “REW” will appear on the display.

To stop the tape while it is fast–forwarding, push “▶▶” or “TAPE” button. To stop the tape while it is rewinding, push “◀◀” or “TAPE” button.

If a tape rewinds completely, the cassette player will stop and then play that same side. If a tape fast–forwards completely, the cassette will play the other side of the tape using the auto–reverse feature.

**Compact disc player**

Push and hold “▶▶” (preset button 6) or “◀◀” (preset button 5) to fast–forward or reverse within a compact disc. When you release the button, the compact disc player will resume playing.

**AM**

Push the “AM” button to turn on the radio and select the AM band. The indicator light will come on and “AM” will appear on the display.

**AUDIO CONT (Tone and sound balance adjustment function)**

Each time you push the “AUDIO CONT” knob, the mode changes. To adjust the tone and balance, turn the knob.

BAS: Adjusts low–pitched tones. The display ranges from –5 to 5.

TRE: Adjusts high–pitched tones. The display ranges from –5 to 5.

FAD: Adjusts the sound balance between the front and rear speakers. The display ranges from F7 to R7.

BAL: Adjusts the sound balance between the right and left speakers. The display ranges from L7 to R7.

**DISC (Compact disc)**

Push the “DISC” button to play a compact disc. The indicator light will come on.

When the audio system is set into compact disc operation, the display shows the track, or track and disc number currently being played.

**Error messages**

If the player malfunctions, your audio system will display following error messages.

**“WAIT”:** The compact disc player unit may be too hot. Allow the player to cool down.

**“ERROR 1”:** The disc may be dirty, damaged or inserted incorrectly (up–side down). Clean the disc and re–insert it.

**“NO DISC”:** The compact disc changer of separate unit is empty. Insert a disc.

**“ERROR 3”:** There is a problem inside the system. Eject the disc or magazine. Set the disc or magazine again.

**“ERROR 4”:** Over–current. Ask your Toyota dealer to inspect.

**“CD OPEN”:** The compact disc changer lid of separate unit is open. Close the compact disc changer lid.

**If the malfunction still exists,** take your vehicle to your Toyota dealer.

**∨ DISC ∧**

Use the “∨ DISC ∧” button to select a disc you want to listen to.

Push “∨” or “∧” side of this button until the number of the disc you want to listen to appears on the display.

**Dolby® DD B NR***

If you are listening to a tape that was recorded with Dolby® B Noise Reduction, push “DD” (preset button 1). “DD” will appear on the display. Push the button again to turn off Dolby® B NR.

The Dolby NR mode reduces tape noise by about 10 dB. For best sound reproduction, play your tapes with this button on or off according to the mode used to record the tape.

*: Dolby noise reduction manufactured under license from Dolby Laboratories Licensing Corporation. “DOLBY” and the double D symbol DD are trademarks of Dolby Laboratories Licensing Corporation.

**FM**

Push the “FM” button to turn on the radio and select the FM band. The indicator light will come on and “FM1” or “FM2” will appear on the display. This system allows you to set twelve FM, two for each of the preset button.

**LOAD**

This button is used to load the compact discs in the compact disc player. This player can store up to six discs.

To load one compact disc only, quickly push and release the button, then insert a compact disc. After the disc is loaded, the shutter of the slot will close.

If no compact disc is inserted, the shutter will close after 15 seconds.

To load multiple compact discs, push and hold the button (until you hear a beep when the audio system is on), then insert the first compact disc. After the disc is loaded, the shutter of the slot will close. After a few seconds, the shutter will automatically open again so the next disc can be inserted. The same process can be applied for loading the rest of the discs. If the player is full of discs, “DISC FULL” will appear on the display.

If no compact disc is inserted, the shutter will close after 15 seconds.

**PROG (Program)**

Push “PROG” (preset button 4) to select the other side of a cassette tape. The display indicates which side is currently selected (“▲” indicates the top side, “▼” indicates the bottom side).

Auto–reverse feature: After the cassette player reaches the end of a tape side, it automatically reverses and begins to play the other side. This is true whether the cassette was playing or fast–forwarding.

**PWR·VOL (Power and Volume)**

Push “PWR·VOL” to turn the audio system on and off. Turn “PWR·VOL” to adjust the volume.

**RAND (Random)**

There are two random features—you can either listen to the tracks on one compact disc in random order, or listen to the tracks on all the compact discs in the magazine in random order.

To play the tracks on one disc in random order:
Quickly push and release “RAND” (preset button 3). “RAND” will appear on the display and the player will perform the tracks on the disc you are listening to in random order. To turn off the random feature, push this button again.

To play all the tracks in the magazine in random order:
Push and hold “RAND” (preset button 1) until you hear a beep. “” and “RAND” will appear on the display and the player will perform all the tracks on all the discs in the magazine in random order. To turn off the random feature, push this button again.

**RPT (Repeat)**

**Cassette player**

Push “RPT” (preset button 2) while the track is playing. “RPT” will appear on the display. When the track ends, it will automatically rewind and replay. To turn off the repeat feature, push this button again.

There must be at least 3 seconds of blank space between tracks in order for the repeat feature to work correctly.

**Compact disc player**

There are two repeat features—you can either replay a disc track or a whole compact disc.

Repeating a track:
Quickly push and release “RPT” (preset button 2) while the track is playing. “RPT” will appear on the display. When the track ends, it will automatically replay. To turn off the repeat feature, push this button again.

Repeating a disc:
Push and hold “RPT” (preset button 2) until you hear a beep. “” and “RPT” will appear on the display. The player will repeat all the tracks on the disc you are listening to. When the disc ends, the player will automatically go back to the first track on the disc and replay. To turn off the repeat feature, push this button again.

**SCAN**

**Radio**

You can either scan all the frequencies on a band or scan only the preset stations for that band.

To scan the preset stations:
Push and hold the “SCAN” button until you hear a beep. The radio will tune in the next preset station up the band, stay there for 5 seconds, and then move to the next preset station. To stop scanning, push this button again.

To scan all the frequencies:
Quickly push and release the “SCAN” button. The radio will find the next station up the station band, stay there for 5 seconds, and then scan again to the next station. To stop scanning, push this button again.

**Compact disc player**

There are two scan features—you can either scan the tracks on a specific disc or scan the first tracks of all the discs in the magazine.

Scanning the tracks on a disc:
Quickly push and release the “SCAN” button. “SCAN” will appear on the display and the player will scan all the tracks on the disc you are listening to. To stop scanning, push this button again. If the player has scanned all the tracks on the disc, it will stop scanning.

Scanning the first tracks of all the discs in the magazine:
Push the “SCAN” button until you hear a beep. “” and “SCAN” will appear on the display and the player will scan the first track of the next disc. To stop scanning, push this button again. If the player has scanned all the discs, it will stop scanning.

**SEEK/TRACK (Seeking/Track up or down)**

**Radio**

In the seek mode, the radio finds and plays the next station up or down the station band.

To seek the next station, quickly push and release “∧” or “∨” side of the “SEEK/TRACK” button. Do this again to find the station after that.

**Cassette player**

Use this button to skip up or down to locate a song or recording.

You can select up to nine recordings (including current one).

A blank space of at least 3 seconds is considered to be a start of a recording.

When the beginning of a tape is reached, the player automatically resumes play.

When the end of the tape is reached, the player automatically reverses sides and resumes normal play.

In addition, the feature may not work well with some spoken word, live, or classical recordings.

**Compact disc player**

Use this button to skip up or down to a different track.

Push "∧" or "∨" side of the "SEEK/ TRACK" button until the number of the track you want to listen to appears on the display. If you want to return to the beginning of the current track, quickly push the down side of the button one time.

**ST (Stereo reception) display**

Your radio automatically changes to stereo reception when a stereo broadcast is received. "ST" appears on the display. If the signal becomes weak, the radio reduces the amount of channel separation to prevent the weak signal from creating noise. If the signal becomes extremely weak, the radio switches from stereo to mono reception.

**TAPE**

Push the "TAPE" button to play a cassette tape. The indicator light will come on.

**TEXT**

This button is used to change the display for the compact disc that contains text data.

To change the display, quickly push and release the "TEXT" button while the compact disc is playing. The display changes in the order from the elapsed time to disc title to track title, then back to the elapsed time.

If this button is pushed while a compact disc that does not contain text data is playing, "NO TITLE" will appear on the display.

If the entire disc or track title does not appear on the display, push and hold the button until you hear a beep. The rest of the title will appear.

**TUNE (Tuning)**

Turn the "TUNE" knob clockwise to step up the frequency. Turn the knob counterclockwise to step down the frequency.

▶**Type 3**

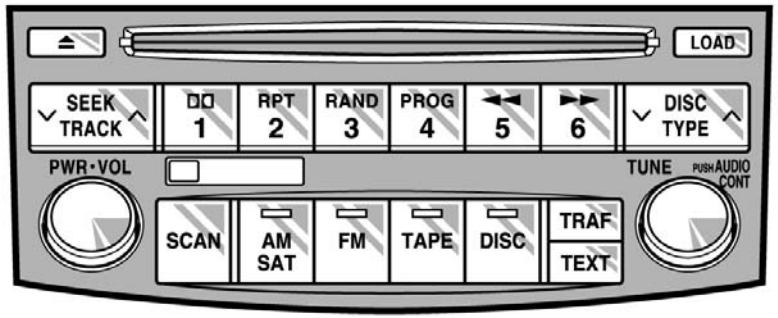


O17108y

Details of specific buttons, controls and features are described in the alphabetical list that follows.

**1 2 3 4 5 6 (Preset buttons)**

These buttons are used to preset and tune in radio stations.

To preset a station to a button: Tune in the desired station. (See “TUNE” or “SEEK/TRACK”.) Push and hold down the button until you hear a beep—this will set the station to the button. The preset button number will appear on the display.

To recall a preset station: Push the button for the station you want. The preset button number and station frequency will appear on the display.

This radio can store one AM and two FM stations for each button. (The display will show “AM”, “FM1” or “FM2” when you push “AM/SAT” or “FM” button.)

XM® satellite radio*—

These buttons are used to preset and tune in radio channels.

To preset a channel to a button: Tune in the desired channel. (See “TUNE” or “SEEK/TRACK”.) Push and hold down the button until you hear a beep—this will set the channel to the button. The preset button number will appear on the display.

To recall a preset channel: Push the button for the channel you want. The preset button number and channel number will appear on the display.

This radio can store three XM® channels for each button. (The display will show “SAT1”, “SAT2” or “SAT3” when you push “AM/SAT” button.)

*: Use of satellite radio requires XM® tuner and service. Contact your Toyota dealer for details.

**⏏ (Eject button)**

This button is used to eject one or all compact discs.

To eject the current compact disc, push and release the compact disc eject button.

To eject a specific disc, push either side of the “DISC/TYPE” button until the number of the disc you want to eject is displayed. Push and release the eject button.

To eject all discs at a time, press and hold the eject button until you hear a beep. The last compact disc played before pushing the button will be ejected first. If the ejected disc is not removed for a long time, the eject function will be cancelled.

**◀◀/▶▶ (Reverse/Fast–forward button)**

**Cassette player**

Push “▶▶” (preset button 6) to fast–forward a cassette tape. “FF” will appear on the display. Push “◀◀” (preset button 5) to rewind a tape. “REW” will appear on the display.

To stop the tape while it is fast–forwarding, push “▶▶” or “TAPE” button. To stop the tape while it is rewinding, push “◀◀” or “TAPE” button.

If a tape rewinds completely, the cassette player will stop and then play that same side. If a tape fast–forwards completely, the cassette will play the other side of the tape using the auto–reverse feature.

**Compact disc player**

Push and hold “▶▶” (preset button 6) or “◀◀” (preset button 5) to fast–forward or reverse within a compact disc. When you release the button, the compact disc player will resume playing.

**AM/SAT* (AM and Satellite radio)**

Push the “AM/SAT” button to turn on the radio and select the AM band. The indicator light will come on and “AM” will appear on the display.

XM® satellite radio—

Push the “AM/SAT” button to turn on the radio and select the XM® band. “SAT1”, “SAT2” or “SAT3” will appear on the display. This system allows you to set eighteen XM® channels, three for each of the preset button.

**Error messages**

If the satellite radio tuner malfunctions, your audio system will display following error messages.

**“ANTENNA”:**

- The XM® antenna is not connected. Check whether the XM® antenna cable is attached securely.
- A short–circuit occurs in the antenna or the surrounding antenna cable. See a Toyota certified dealer.

**“UPDATING”:**

- You have not subscribed to the XM® satellite radio. The radio is being updated with the latest encryption code. Contact the XM® satellite radio for subscription information. When a contact is canceled, you can choose the “CH000” and all free–to–air channels.
- The premium channel you selected is not authorized. Wait for about 2 seconds until the radio returns to the previous channel or “CH001”. If it does not change automatically, select another channel. If you want to listen to the premium channel, contact the XM® satellite radio.

**“NO SIGNAL”:** The XM® signal is too weak at the current location. Wait until your vehicle reaches a location with a stronger signal.

**“LOADING”:** The unit is acquiring audio or program information. Wait until the unit has received the information.

**“OFF AIR”:** The channel you selected is not broadcasting any programming. Select another channel.

**“– – –”:** The channel you selected is no longer available. Wait for about 2 seconds until the radio returns to the previous channel or “CH001”. If it does not change automatically, select another channel.

The XM® Listener Care Center is also available on the phone, please call (800) 967–2346 during the following hours.

Monday—Saturday: 6 a.m.—2 a.m. Eastern time
Sunday: 8 a.m.—8 p.m. Eastern time

*: Use of satellite radio requires XM® tuner and service. Contact your Toyota dealer for details.

**AUDIO CONT (Tone and sound balance adjustment function)**

Each time you push the “AUDIO CONT” knob, the mode changes. To adjust the tone and balance, turn the knob.

BAS: Adjusts low–pitched tones. The display ranges from –5 to 5.

MID: Adjusts mid–pitched tones. The display ranges from –5 to 5.

TRE: Adjusts high–pitched tones. The display ranges from –5 to 5.

FAD: Adjusts the sound balance between the front and rear speakers. The display ranges from F7 to R7.

BAL: Adjusts the sound balance between the right and left speakers. The display ranges from L7 to R7.

SURROUND: Turn on or off the surround function. “SURROUND ON” or “SURROUND OFF” on the display.

**DISC (Compact disc)**

Push the “DISC” button to play a compact disc. The indicator light will come on.

When the audio system is set into compact disc operation, the display shows the track, or track and disc number currently being played.

**Error messages**

If the player malfunctions, your audio system will display following error messages.

**“WAIT”:** The compact disc player unit may be too hot. Allow the player to cool down.

**“ERROR 1”:** The disc may be dirty, damaged or inserted incorrectly (up–side down). Clean the disc and re–insert it.

**“NO DISC”:** The compact disc changer of separate unit is empty. Insert a disc.

**“ERROR 3”:** There is a problem inside the system. Eject the disc or magazine. Set the disc or magazine again.

**“ERROR 4”:** Over–current. Ask your Toyota dealer to inspect.

**“CD OPEN”:** The compact disc changer lid of separate unit is open. Close the compact disc changer lid.

**If the malfunction still exists,** take your vehicle to your Toyota dealer.

**DISC/TYPE**

**Radio**

When you push the “∧” or “∨” side of the “DISC/TYPE” button while receiving an RDS station, the current program type appears on the display.

Each time you push “∧” or “∨” side of this button, the program type changes as in the following:

- NEWS
- SPORTS
- TALK
- POP
- ROCK
- JAZZ
- CLASSIC
- OTHERS
- INFORM (Information)
- EASY LIS (Easy listening)
- CLS/JAZZ (Classical music and Jazz)
- R&B (Rhythm and Blues)
- RELIGION
- ALERT (Emergency message)

With the program type displayed, push the “SEEK/TRACK” or “SCAN” button. You can seek or scan for the station broad casting the same type of program.

XM® satellite radio*—

When you push the “∨” or “∧” side of the “DISC/TYPE” button while receiving a XM® channel, the current channel category appears on the display.

When the channel category appears, push either “∨” or “∧” side of this button to switch to the next or previous category.

*: Use of satellite radio requires XM® tuner and service. Contact your Toyota dealer for details.

**Compact disc player**

Use the “DISC/TYPE” button to select a disc you want to listen to.

Push “∨” or “∧” side of the “DISC/TYPE” button until the number of the disc you want to listen appears on the display.

**Dolby® DD B NR***

If you are listening to a tape that was recorded with Dolby® B Noise Reduction, push “DD” (preset button 1). “DD” will appear on the display. Push the button again to turn off Dolby® B NR.

The Dolby NR mode reduces tape noise by about 10 dB. For best sound reproduction, play your tapes with this button on or off according to the mode used to record the tape.

*: Dolby noise reduction manufactured under license from Dolby Laboratories Licensing Corporation. “DOLBY” and the double D symbol DD are trademarks of Dolby Laboratories Licensing Corporation.

**FM**

Push the “FM” button to turn on the radio and select the FM band. The indicator light will come on and “FM1” or “FM2” will appear on the display. This system allows you to set twelve FM stations, two for each of the preset button.

**LOAD**

This button is used to load the compact discs in the compact disc player. This player can store up to six discs.

To load one compact disc only, quickly push and release the button, then insert a compact disc. After the disc is loaded, the shutter of the slot will close.

If no compact disc is inserted, the shutter will close after 15 seconds.

To load multiple compact discs, push and hold the button (until you hear a beep when the audio system is on), then insert the first compact disc. After the disc is loaded, the shutter of the slot will close. After a few seconds, the shutter will automatically open again so the next disc can be inserted. The same process can be applied for loading the rest of the discs. If the player is full of discs, “DISC FULL” will appear on the display.

If no compact disc is inserted, the shutter will close after 15 seconds.

**PROG (Program)**

Push “PROG” (preset button 4) to select the other side of a cassette tape. The display indicates which side is currently selected (“▲” indicates the top side, “▼” indicates the bottom side).

Auto–reverse feature: After the cassette player reaches the end of a tape side, it automatically reverses and begins to play the other side. This is true whether the cassette was playing or fast–forwarding.

**PWR·VOL (Power and Volume)**

Push “PWR·VOL” to turn the audio system on and off. Turn “PWR·VOL” to adjust the volume.

**RAND (Random)**

There are two random features—you can either listen to the tracks on one compact disc in random order, or listen to the tracks on all the compact discs in the magazine in random order.

To play the tracks on one disc in random order:
Quickly push and release “RAND” (preset button 3). “RAND” will appear on the display and the player will perform the tracks on the disc you are listening to in random order. To turn off the random feature, push this button again.

To play all the tracks in the magazine in random order:
Push and hold “RAND” (preset button 1) until you hear a beep. “” and “RAND” will appear on the display and the player will perform all the tracks on all the discs in the magazine in random order. To turn off the random feature, push this button again.

**RDS (Radio Data System) display**

The radio will automatically switch to the RDS mode to receive an RDS station while turned to FM broadcasts. “RDS” will appear on the display.

**RPT (Repeat)**

**Cassette player**

Push “RPT” (preset button 2) while the track is playing. “RPT” will appear on the display. When the track ends, it will automatically rewind and replay. To turn off the repeat feature, push this button again.

There must be at least 3 seconds of blank space between tracks in order for the repeat feature to work correctly.

**Compact disc player**

There are two repeat features—you can either replay a disc track or a whole compact disc.

Repeating a track:
Quickly push and release “RPT” (preset button 2) while the track is playing. “RPT” will appear on the display. When the track ends, it will automatically replay. To turn off the repeat feature, push this button again.

Repeating a disc:
Push and hold “RPT” (preset button 2) until you hear a beep. “” and “RPT” will appear on the display. The player will repeat all the tracks on the disc you are listening to. When the disc ends, the player will automatically go back to the first track on the disc and replay. To turn off the repeat feature, push this button again.

## SCAN

### Radio

You can either scan all the frequencies on a band or scan only the preset stations for that band.

To scan the preset stations:
Push and hold the “SCAN” button until you hear a beep. The radio will tune in the next preset station up the band, stay there for 5 seconds, and then move to the next preset station. To stop scanning, push this button again.

To scan all the frequencies:
Quickly push and release the “SCAN” button. The radio will find the next station up the station band, stay there for 5 seconds, and then scan again to the next station. To stop scanning, push this button again.

XM® satellite radio*—

You can either scan the currently selected channel category or scan only the preset channels for that band.

To scan the preset channels:
Push and hold the “SCAN” button until you hear a beep. “SCAN” appears on the display. The radio will tune in the next preset channel up the band, stay there for 5 seconds, and then move to the next preset channel. To stop scanning, push this button again.

To scan the currently selected channel category:
Quickly push and release the “SCAN” button. “SCAN” appears on the display. The radio will find the next channel in the same channel category up the band, stay there for 5 seconds, and then scan again. To stop scanning, push this button again.

*: Use of satellite radio requires XM® tuner and service. Contact your Toyota dealer for details.

### Compact disc player

There are two scan features—you can either scan the tracks on a specific disc or scan the first tracks of all the discs in the magazine.

Scanning the tracks on a disc:
Quickly push and release the “SCAN” button. “SCAN” will appear on the display and the player will scan all the tracks on the disc you are listening to. To stop scanning, push this button again. If the player scanned all the tracks on the disc, it will stop scanning.

Scanning the first tracks of all the discs in the magazine:
Push the “SCAN” button until you hear a beep. “” and “SCAN” will appear on the display and the player will scan the first track on the next disc. To stop scanning, push this button again. If the player has scanned all the discs, it will stop scanning.

**SEEK/TRACK (Seeking/Tracking up or down)**

**Radio**

In the seek mode, the radio finds and plays the next station up or down the station band.

To seek the next station, quickly push and release "∧" or "∨" side of the "SEEK/TRACK" button. Do this again to find the station after that.

XM® satellite radio*—

To select the next channel within the current channel category, push the "∧" or "∨" side of the "SEEK/TRACK" button. Repeat until a desired channel is found.

*: Use of satellite radio requires XM® tuner and service. Contact your Toyota dealer for details.

**Cassette player**

Use this button to skip up or down to locate a song or recording.

You can select up to nine recordings (including current one).

A blank space of at least 3 seconds is considered to be a start of a recording.

When the beginning of a tape is reached, the player automatically resumes play.

When the end of the tape is reached, the player automatically reverses sides and resumes normal play.

In addition, the feature may not work well with some spoken word, live, or classical recordings.

**Compact disc player**

Use this button to skip up or down to a different track.

Push "∧" or "∨" side of the "SEEK/TRACK" button until the number of the track you want to listen to appears on the display. If you want to return to the beginning of the current track, quickly push the down side of the button one time.

**ST (Stereo reception) display**

Your radio automatically changes to stereo reception when a stereo broadcast is received. "ST" appears on the display. If the signal becomes weak, the radio reduces the amount of channel separation to prevent the weak signal from creating noise. If the signal becomes extremely weak, the radio switches from stereo to mono reception.

**TAPE**

Push the "TAPE" button to play a cassette tape. The indicator light will come on.

**TEXT**

**Radio**

This button is operational in RDS mode.

When an RDS station transmits a text message, "MSG" will appear on the displayed.

To display the text message, first push the "TEXT" button to change the radio station display. Then push the "TEXT" button once more to display, and the message will appear on the display.

If the entire the message is not displayed, "►" will appear on the display. To display the rest of the message, push and hold the "TEXT" button until you hear a beep.

After the entire message has been displayed, the message will disappear.

The message display will be canceled if any button that affects the display is pushed.

If no messages are received, "NO MESSAGE" will appear on the display, and the display returns to the previous mode.

The message display will be canceled if you activate any function that affects the display.

XM® satellite radio*1—

When you push the “TEXT” button, the display changes as follows:
CH NAME → TITLE (SONG/PROGRAM TITLE) → NAME (ARTIST NAME/FEATURE) → CH NUMBER → CH NAME

Up to 10 alphanumeric characters can be displayed. (Some information will not be fully displayed.)

The message display will be canceled if any button that affects the display is pushed.

If there is no song/program title or artist name/feature associated with the channel at that time, “– – – – –” will appear on the display.

This XM® tuner supports “Audio Services” (Music and Talk) of only XM® satellite radio and “Text Information”*2 linked to the respective audio services.

*1: Use of satellite radio requires XM® tuner and service. Contact your Toyota dealer for details.

*2: Text Information includes, Channel Name, (Artist) Name, (Song) Title and Category Name.

**Compact disc player**

This button is used to change the display for the compact disc that contains text data.

To change the display, quickly push and release the “TEXT” button while the compact disc is playing. The display changes in the order from the elapsed time to disc title to track title, then back to the elapsed time.

If this button is pushed while a compact disc that does not contain text data is playing, “NO TITLE” will appear on the display.

If the entire disc or track title does not appear on the display, push and hold the button until you hear a beep. The rest of the title will appear.

**TRAF (Traffic)**

This button turns the traffic announcement (TA) feature on and off. This button is operational only in FM mode.

By pushing the “TRAF” button, “TRAF SEEK” will flash on the display and the radio will seek a traffic program station.

After the traffic announcement program is over, the display returns to the previous mode.

If no traffic program station is found, “NO TRAF INFO” appears on the display, and the display returns to the previous mode and a beep sound.

To cancel the traffic announcement, push this button again.

**TUNE (Tuning)**

Turn the “TUNE” knob clockwise to step up the frequency. Turn the knob counterclockwise to step down the frequency.

XM® satellite radio*—

Turn the “TUNE” knob clockwise to step up the channel. Turn the knob counterclockwise to step down the channel.

*: Use of satellite radio requires XM® tuner and service. Contact your Toyota dealer for details.

## Audio remote controls (steering switches)

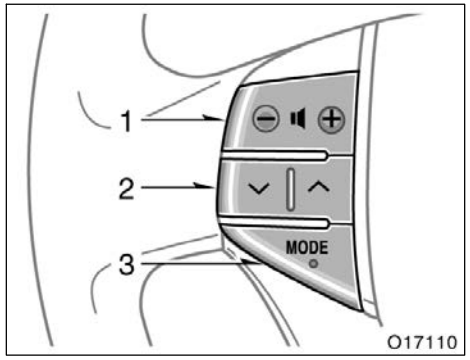


Some parts of the audio system can be adjusted using the switches on the steering wheel.

Details of the specific switches, controls, and features are described below.

1. Volume control switch
2. "∨ ∧" switch
3. "MODE" switch

**1. Volume control switch**

Push "+" side to increase the volume. The volume continues to increase while the switch is being pushed.

Push "–" side to decrease the volume. The volume continues to decrease while the switch is being pushed.

**2. "∨ ∧" switch**

**Radio**

This switch has the following features—

To select a preset station:
Quickly push and release the "∨" or "∧" side of the switch. Do this again to select the next preset station.

To seek a station:
Push and hold the "∨" or "∧" side of the switch until you hear a beep. Do this again to find the next station. If you push the switch on either side during the seek mode, seeking will be cancelled.

To step up or down the frequency, push and hold the switch even after you hear a beep. When you release the switch, the radio will begin seeking up or down for a station. Do this again to find the next station.

XM® satellite radio*—

To select a preset channel, push the "∨" or "∧" side of the switch. Repeat until a desired channel is found.

*: Use of satellite radio requires XM® tuner and service. Contact your Toyota dealer for details.

**Cassette player**

This switch has the following features—

To skip up or down to a different track in either direction:
Quickly push and release the "∨" or "∧" side of the switch.

You can select up to nine recordings (including current one).

A blank space of at least 3 seconds is considered to be a start of a recording.

When the beginning of a tape is reached, the player automatically resumes play.

When the end of the tape is reached, the player automatically reverses sides and resumes normal play.

In addition, the feature may not work well with some spoken word, live, or classical recordings.

To fast–forward or reverse:
Push and hold the "∧" side of the switch to fast–forward a cassette tape. "FF" will appear on the display. Push and hold the "∨" side of the switch to rewind a tape. "REW" will appear on the display.

To stop the tape while it is fast–forwarding, push the "∧" side of the switch. To stop the tape while it is rewinding, push the "∨" side of the switch.

If a tape rewinds completely, the cassette player will stop and then play that same side. If a tape fast–forwards completely, the cassette will play the other side of the tape using the auto–reverse feature.

**Compact disc player**

Use this switch to skip up or down to a different track in either direction.

Quickly push and release the "∨" or "∧" side of the switch until the track you want to listen to is set. If you want to return to the beginning of the current track, push the "∨" side of the switch once, quickly.

With compact disc changer only—

Push and hold the "∨" or "∧" side of the switch until the disc you want to listen to is set.

**3. "MODE" switch**

Push "MODE" switch to select an audio mode. Each push changes the mode sequentially if the desired mode is ready to use.

To turn the audio system on, push the "MODE" switch.

To turn the audio system off, push and hold the "MODE" switch until the system turns off.

## Audio system operating hints

***NOTICE***

***To ensure correct audio system operations:***

- ***Be careful not to spill beverages over the audio system.***
- ***Do not put anything other than a cassette tape or Compact Disc into the slot.***
- ***The use of a cellular phone inside or near the vehicle may cause a noise from the speakers of the audio system which you are listening to. However, this does not indicate a malfunction.***

**RADIO RECEPTION**

Usually, a problem with radio reception does not mean there is a problem with your radio—it is just the normal result of conditions outside the vehicle.

For example, nearby buildings and terrain can interfere with FM reception. Power lines or telephone wires can interfere with AM signals. The farther you are from a station, the weaker its signal will be. In addition, reception conditions change constantly as your vehicle moves.

Here are some common reception problems that you may experience.

FM

Fading and drifting stations—Generally, the effective range of FM is about 40 km (25 miles). Once outside this range, you may notice fading and drifting, which increase with the distance from the radio transmitter. They are often accompanied by distortion.

Multi–path—FM signals are reflective, making it possible for two signals to reach your antenna at the same time. If this happens, the signals will cancel each other out, causing a momentary flutter or loss of reception.

Static and fluttering—These occur when signals are blocked by buildings, trees, or other large objects. Increasing the bass level may reduce static and fluttering.

Station swapping—If the FM signal you are listening to is interrupted or weakened, and there is another strong station nearby on the FM band, your radio may tune in the second station until the original signal can be picked up again.

AM

Fading—AM broadcasts are reflected by the upper atmosphere–especially at night. These reflected signals can interfere with those received directly from the radio station, causing the radio station to sound alternately strong and weak.

Station interference—When a reflected signal and a signal received directly from a radio station are very nearly the same frequency, they can interfere with each other, making it difficult to hear the broadcast.

Static—AM is easily affected by external sources of electrical noise, such as high tension power lines, lightening, or electrical motors. This results in static.

XM®*

Alternation or modifications carried out without appropriate authorization may invalidate the user's right to operate the equipment.

*: Use of satellite radio requires XM® tuner and service. Contact your Toyota dealer for details.

**NOTICE**

***This equipment has been tested and found to comply with the limits for a class B digital device, pursuant to Part 15 of the FCC Rules. These limits are designed to provide reasonable protection against harmful interference in a residential installation. This equipment generates, uses and can radiate radio frequency energy and, if not installed and used in accordance with the instructions, may cause harmful interference to radio communications. However, there is no guarantee that interference will not occur in a particular installation.***

***If this equipment does cause harmful interference to radio or television reception, which can be determined by turning the equipment off and on, the user is encouraged to try to correct the interference by one or more of the following measures:***

***—Reorient or relocate the receiving antenna.***

***—Increase the separation between the equipment and receiver.***

***—Connect the equipment into an outlet on a circuit different from that to which the receiver is connected.***

***—Consult the dealer or an experienced radio/TV technician for help.***

**CARING FOR YOUR CASSETTE PLAYER AND TAPES**

For the best performance for your cassette player and tapes:

Clean the tape head and other parts regularly.

- A dirty tape head or tape path can decrease sound quality and tangle your cassette tapes. The easiest way to clean them is by using a cleaning tape. (A wet type is recommended.)

Use high–quality cassettes.

- Low–quality cassette tapes can cause many problems, including poor sound, inconsistent playing speed, and constant auto–reversing. They can also get stuck or tangled in the cassette player.
- Do not use a cassette if it has been damaged or tangled or if its label is peeling off.
- Do not leave a cassette in the player if you are not listening to it, especially if it is hot outside.
- Store cassettes in their cases and out of direct sunlight.
- Avoid using cassettes with a total playing time longer than 100 minutes (50 minutes per side). The tape used in these cassettes is thin and could get stuck or tangled in the cassette player.

## CARING FOR YOUR COMPACT DISC PLAYER AND DISCS

- Your compact disc player is intended for use with 12 cm (4.7 in.) discs only.
- Extremely high temperatures can keep your compact disc player from working. On hot days, use the air conditioning to cool the vehicle interior before you listen to a disc.
- Bumpy roads or other vibrations may make your compact disc player skip.
- If moisture gets into your compact disc player, you may not hear any sound even though your compact disc player appears to be working. Remove the disc from the player and wait until it dries.

**⚠ CAUTION**

**Compact disc players use an invisible laser beam which could cause hazardous radiation exposure if directed outside the unit. Be sure to operate the player correctly.**

- Use only compact discs marked as shown above. The following products may not be playable on your compact disc player.

  Copy–protected CD
  CD–R (CD–Recordable)
  CD–RW (CD–Re–writable)
  CD–ROM

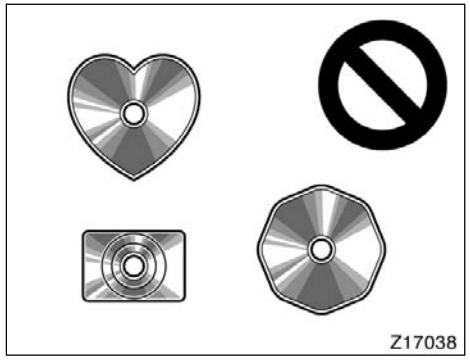


**Special shaped discs**

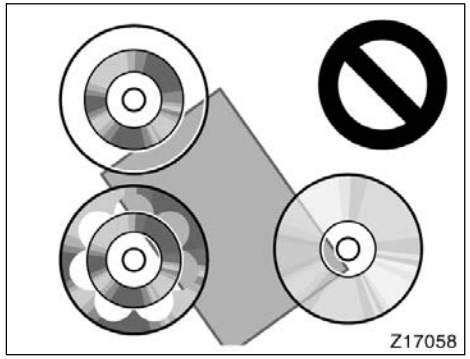


**Transparent/translucent discs**

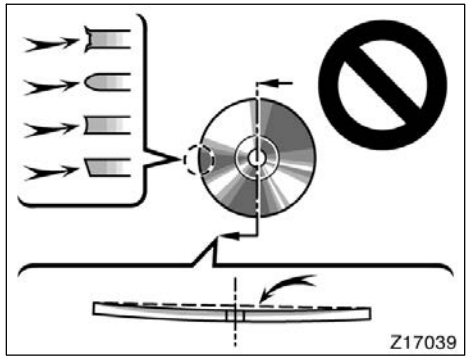


**Low quality discs**

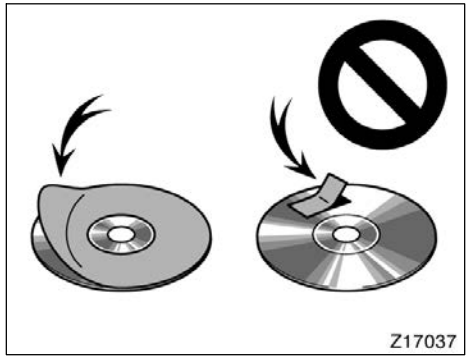


**Labeled discs**

***NOTICE***

- ***Do not use special shaped, transparent/translucent, low quality or labeled discs such as those shown in the illustrations. The use of such discs may damage the player or changer, or it may be impossible to eject the disc.***
- ***This system is not designed for use of Dual Disc. Do not use Dual Disc because it may cause damage to the player or changer.***

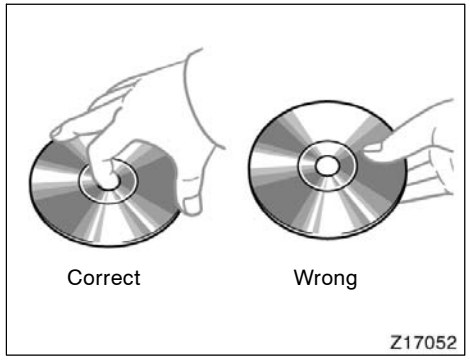


- Handle compact discs carefully, especially when you are inserting them. Hold them on the edge and do not bend them. Avoid getting fingerprints on them, particularly on the shiny side.
- Dirt, scratches, warping, pin holes, or other disc damage could cause the player to skip or to repeat a section of a track. (To see a pin hole, hold the disc up to the light.)
- Remove discs from the compact disc player when you are not listening to them. Store them in their plastic cases away from moisture, heat, and direct sunlight.

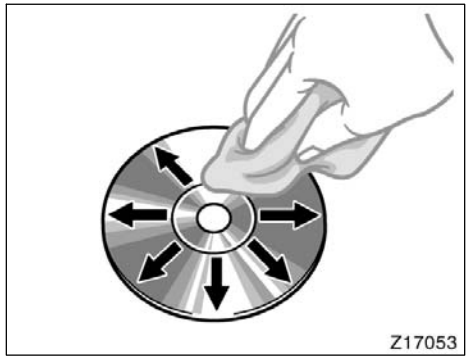


To clean a compact disc: Wipe it with a soft, lint–free cloth that has been dampened with water. Wipe in a straight line from the center to the edge of the disc (not in circles). Dry it with another soft, lint–free cloth. Do not use a conventional record cleaner or anti–static device.

# SECTION 1 – 9

## OPERATION OF INSTRUMENTS AND CONTROLS

### Air conditioning system


Controls . . . . . 230
Air flow selector settings . . . . . 234
Operating tips . . . . . 234
Climate remote controls . . . . . 237
Instrument panel and rear vents . . . . . 238
Air conditioning filter . . . . . 239

## Controls

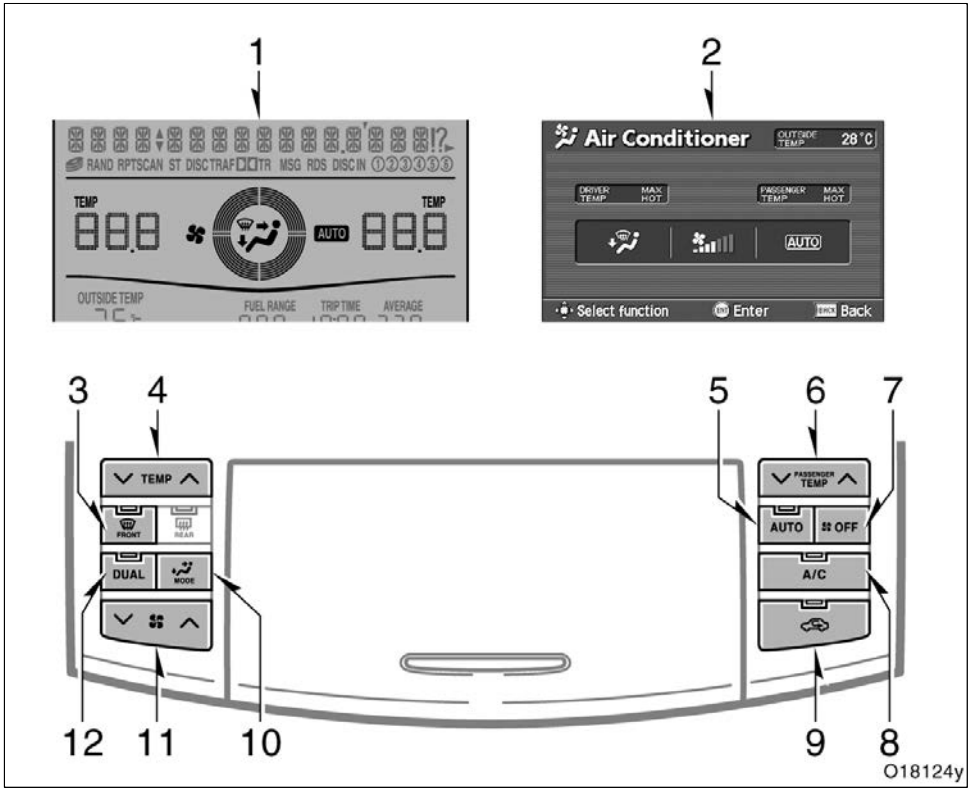


1. Air conditioning display (without navigation system)
2. Air conditioning display (For the navigation system, see the separate “Navigation System Owner’s Manual.”)
3. Windshield air flow button
4. Temperature selector (“TEMP”)
   (with “DUAL” button indicator on—individual setting on driver side only)
   (with “DUAL” button indicator off—simultaneous setting on driver, front passenger)
5. “AUTO” button
6. Temperature selector (“PASSENGER TEMP”)
   (individual setting on front passenger side only)
7. “OFF” button
8. “A/C” button
9. Air intake selector
10. “MODE” button (air flow selector)
11. Fan speed selector
12. “DUAL” button (temperature setting mode change)

**“AUTO” button**

For automatic operation of the air conditioning, press the “AUTO” button. “AUTO” will appear on the display to show that the automatic operation mode has been selected.

In the automatic operation mode, the air conditioning selects the most suitable fan speed, air flow, air intake and on–off of the air conditioning according to the temperature.

When you press the “AUTO” button with the air intake mode at FRESH, internal circulation may be applied for maximum cooling.

You may use manual controls if you want to select your own settings.

**Fan speed selector**

Push the “∧” (increase) or “∨” (decrease) side of the button to adjust the fan speed.

In automatic operation, you do not have to adjust the fan speed unless you desire another fan speed mode.

**“DUAL” button**

Push the button to change the mode of the temperature setting.

**With the indicator on—**Individual temperature setting for driver and front passenger

**With the indicator off—**Simultaneous temperature setting for driver and front passenger

**Temperature selectors**

To increase the temperature, press the “∧” side. To decrease it, press the “∨” side.

“LO” appears when you adjust to maximum cooling, and “HI” appears when you adjust to maximum warming.

**—“TEMP” button**

With the “DUAL” button indicator on—This button changes the temperature on the driver side only.

With the “DUAL” button indicator off—This button changes the temperature on the driver side and front passenger side simultaneously.

This function will be cancelled when the “PASSENGER TEMP” button is pushed.

**—“PASSENGER TEMP” button**

This button changes the temperature on the front passenger side only.

**“OFF” button**

Push the “OFF” button to turn off the air conditioning system.

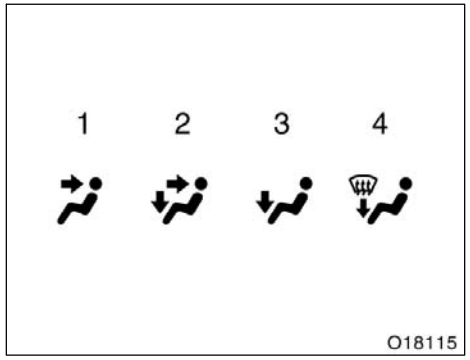


**“MODE” button (air flow selector)**

Push the “MODE” button to select the vents used for air flow.

In automatic operation, you do not have to select the air flow unless you desire another air flow mode.

1. **Panel—**Air flows mainly from the instrument panel vents and the rear vents.
2. **Bi–level—**Air flows from the floor vents, the instrument panel vents and the rear vents.

   When you set the temperature selector setting at about the middle in automatic operation, warm air flows out of the floor vents and relatively low–temperature air flows out of the center and side vents.
3. **Floor—**Air flows mainly from the floor vents.
4. **Floor/Windshield—**Air flows mainly from the floor vents and windshield vents.

   This position allows the air intake to select FRESH automatically. This is to clean up the front view more quickly.

   If you want to return the setting to RECIRCULATE mode, press the air intake selector button once again.

For details about air flow selector settings, see “Air flow selector settings” described below.

**Windshield air flow button**

When this button is pressed, air flows mainly from the windshield vents and turns on the defogging function with the purpose of clearing the front view.

Pressing this button once again returns the air flow mode to the last one used.

In this position, the air intake selector mode changes to FRESH automatically to clean up the front view quickly. It is not possible to return to RECIRCULATE in this position.

For details about air flow selector settings, see “Air flow selector settings” described below.

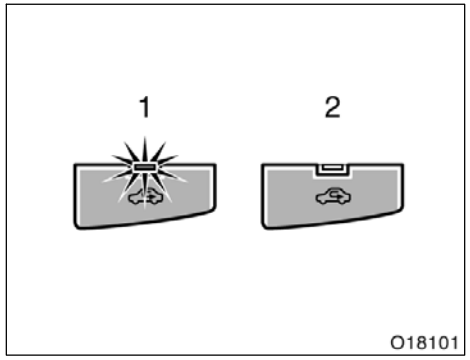


**Air intake selector**

Press the button to select the air source. The air intake mode which is being selected is shown on the display.

1. **Recirculate—**Recirculates the air inside the vehicle.
2. **Fresh—**Draws outside air into the system.

To prevent fogging up of the windshield, the air intake mode may change automatically to FRESH depending on the condition of the air conditioning system.

For example, when the ambient temperature is low, the air intake mode may change automatically to FRESH. This is not a malfunction.

**"A/C" button**

To turn on the air conditioning, press the "A/C" button. The "A/C" button indicator will come on. To turn the air conditioning off, press the button again.

If the "A/C" button indicator flashes, there is a problem in the air conditioning system and the air conditioning automatically shuts off. If this happens, take your vehicle to your Toyota dealer for service.

## Air flow selector settings

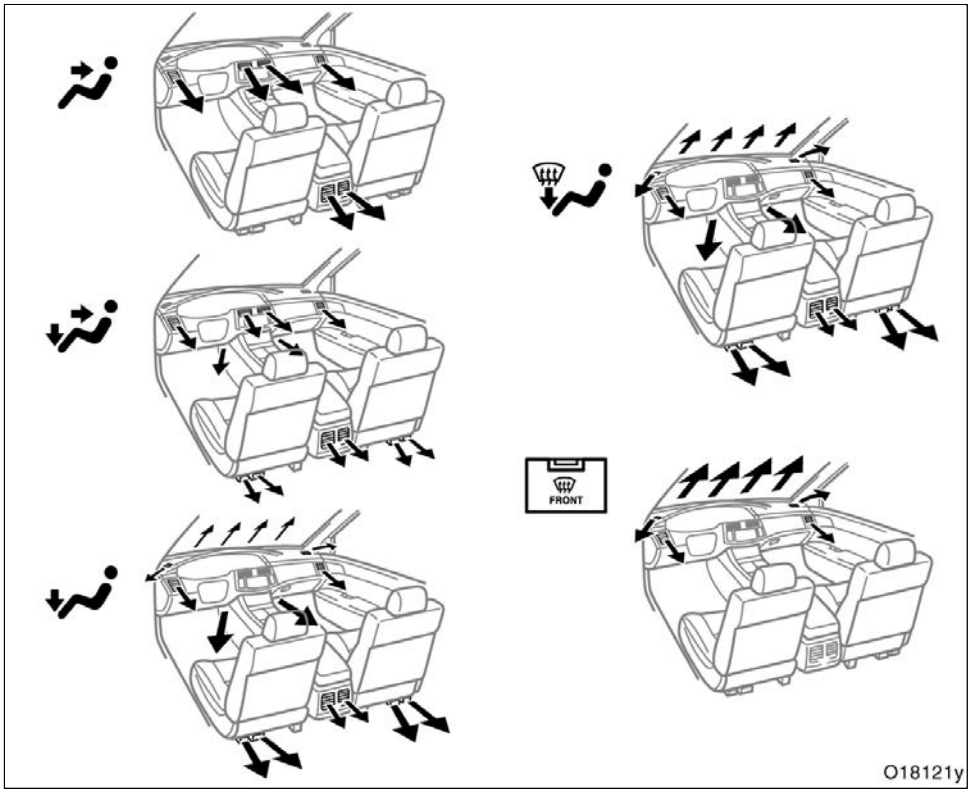


## Operating tips

- To cool off your Toyota after it has been parked in the hot sun, drive with the windows open for a few minutes. This vents the hot air, allowing the air conditioning to cool the interior more quickly.
- Make sure the air intake grilles in front of the windshield are not blocked (by leaves or snow, for example).
- On humid days, do not blow cold air on the windshield. The windshield could fog up because of the difference in air temperature on the inside and outside of the windshield.
- Keep the area under the front seats clear to allow air to circulate throughout the vehicle.
- On cold days, set the fan speed to high for a minute to help clear the intake ducts of snow or moisture. This can reduce the amount of fogging on the windows.
- When driving on dusty roads, close all windows. If dust thrown up by the vehicle is still drawn into the vehicle after closing the windows, it is recommended that the air intake selector be set to FRESH and the fan speed selector to any setting except off.

- If following another vehicle on a dusty road, or driving in windy and dusty conditions, it is recommended that the air intake selector be temporarily set to RECIRCULATE, which will close off the outside passage and prevent outside air and dust from entering the vehicle interior.

**Heating**

For best results, set controls to:

—For automatic operation

**Press in the "AUTO" button.**
**Temperature—**To the desired temperature
**Air intake—FRESH** (outside air)
**Air conditioning—OFF**

—For manual operation

**Fan speed—**To the desired fan speed
**Temperature—**Towards high temperature
**Air intake—FRESH** (outside air)
**Air flow—FLOOR**
**Air conditioning—OFF**

- For quick heating, select recirculated air for a few minutes. To keep the windows from fogging, select fresh after the vehicle interior has been warmed.
- Press the "A/C" button on for dehumidified heating.
- Choose floor/windshield air flow to heat the vehicle interior while defrosting or defogging the windshield.

**Air conditioning**

For best results, set controls to:

—For automatic operation

**Press in the "AUTO" button.**
**Temperature—**To the desired temperature
**Air intake—FRESH** (outside air)
**Air conditioning—ON**

—For manual operation

**Fan speed—**To the desired fan speed
**Temperature—**Towards low temperature
**Air intake—FRESH** (outside air)
**Air flow—PANEL**
**Air conditioning—ON**

- For quick cooling, select recirculated air for a few minutes.

**Ventilation**

For best results, set controls to:

—For automatic operation

**Press in the "AUTO" button.**
**Temperature—**Towards low temperature
**Air intake—FRESH** (outside air)
**Air conditioning—OFF**

—For manual operation

**Fan speed—**To the desired fan speed
**Temperature—**Towards low temperature
**Air intake—FRESH** (outside air)
**Air flow—PANEL**
**Air conditioning—OFF**

**Defogging and defrosting**

**—The inside of the windshield**

For best results, set controls to:

—For automatic operation

**Temperature—**Towards high temperature to heat; low temperature to cool
**Air intake—FRESH** (outside air)
**Air flow—WINDSHIELD**

—For manual operation

**Fan speed—**To the desired fan speed
**Temperature—**Towards high temperature to heat; low temperature to cool
**Air intake—FRESH** (outside air)
**Air flow—WINDSHIELD**

Pressing the windshield air flow button turns on the defogging function with the purpose of clearing the front view.

Pressing this button once again returns the air flow mode to the last one used.

In this position, the air intake selector mode changes to FRESH automatically to clean up the front view quickly. It is not possible to return to RECIRCULATE in this position.

- On humid days, do not blow cold air on the windshield—the difference between the outside and inside temperatures could make the fogging worse.

**—The outside of the windshield**

For best results, set controls to:

—For automatic operation

**Temperature—**Towards high temperature
**Air intake—FRESH** (outside air)
**Air flow—WINDSHIELD**

—For manual operation

**Fan speed—**To the desired fan speed
**Temperature—**Towards high temperature
**Air intake—FRESH** (outside air)
**Air flow—WINDSHIELD**

Pressing the windshield air flow button turns on the defrosting function with the purpose of clearing the front view.

Pressing this button once again returns the air flow mode to the last one used.

In this position, the air intake selector mode changes to FRESH automatically to clean up the front view quickly. It is not possible to return to RECIRCULATE in this position.

- To heat the vehicle interior while defrosting the windshield, choose floor/windshield air flow.

## Climate remote controls (steering switches)

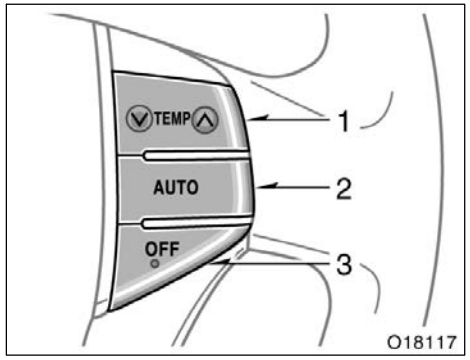


Some parts of the air conditioning system can be adjusted using the switches on the steering wheel.

Details of the specific switches, controls, and features are described below.

1. Temperature selector (“TEMP”)
   (with “DUAL” button indicator on—individual setting on driver side only)
   (with “DUAL” button indicator off—simultaneous setting on driver, front passenger)
2. “AUTO” button
3. “OFF” button

**“AUTO” button**

For automatic operation of the air conditioning, press the “AUTO” button. “AUTO” will appear on the display to show that the automatic operation mode has been selected.

In the automatic operation mode, the air conditioning selects the most suitable fan speed, air flow, air intake and on–off of the air conditioning according to the temperature.

When you press the “AUTO” button with the air intake mode at FRESH, internal circulation may be applied for maximum cooling.

You may use manual controls if you want to select your own settings.

**Temperature selector**

To increase the temperature, press the “∧” side. To decrease it, press the “∨” side.

“LO” appears when you adjust to maximum cooling, and “HI” appears when you adjust to maximum warming.

With the “DUAL” button indicator on—This button changes the temperature on the driver side only.

With the “DUAL” button indicator off—This button changes the temperature on the driver side and front passenger side simultaneously.

This function will be cancelled when the “PASSENGER TEMP” button on the instrument panel is pushed.

**“OFF” button**

Push the “OFF” button to turn off the air conditioning system.

## Instrument panel and rear vents

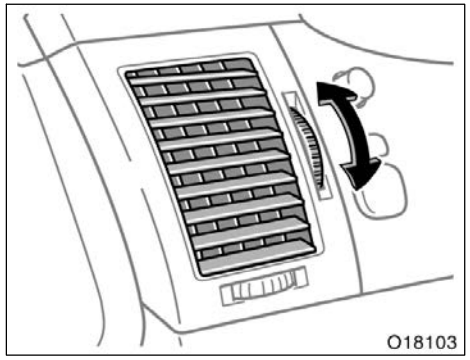


**Side vents**

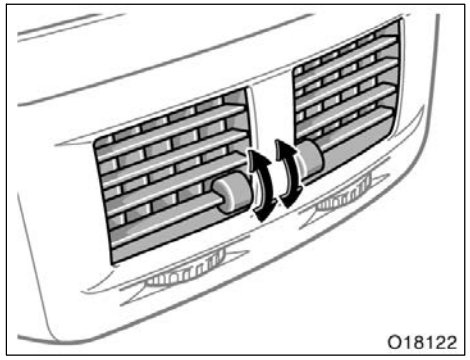


**Rear vents**

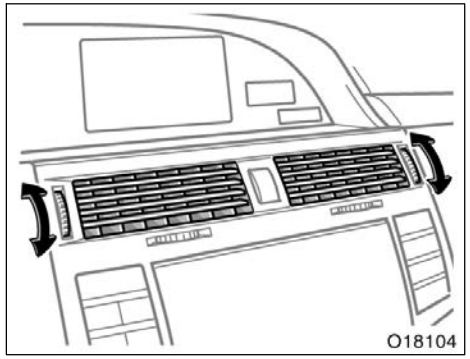


**Center vents**

If air flow control is not satisfactory, check the instrument panel vents and rear vents. The instrument panel vents and rear vents may be opened or closed as shown.

## Air conditioning filter—

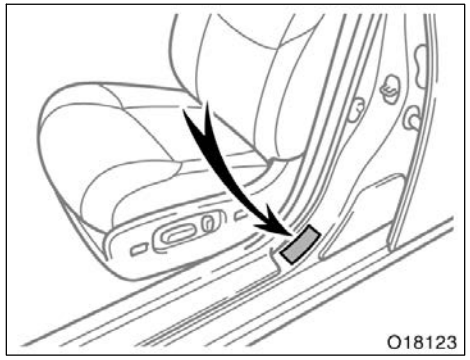


**The air conditioning filter information label is placed as shown and indicates that a filter has been installed.**

The air conditioning filter prevents dust from entering the vehicle through the air conditioning vent.

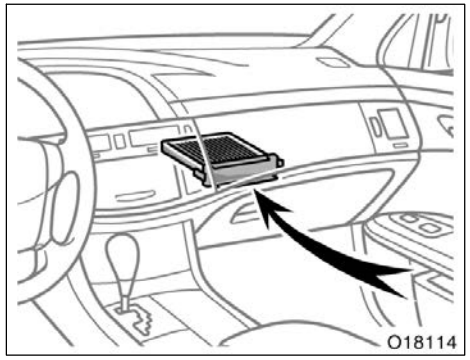


**This air conditioning system has a high efficient air refiner filter which helps eliminate dust and pollen, thereby increasing your driving comfort.**

**The air conditioning filter is set behind the glove box.**

## —Checking and replacing the air conditioning filter

**The air conditioning filter may clog after long use. The filter may need to be cleaned or replaced if the air flow of the air conditioner and heater experiences extreme reductions in operating efficiency, or if the windows begin to fog up easily.**

To maintain the air conditioning efficiency, cleaning and replace the air conditioning filter according to the maintenance schedule. In dusty areas or areas with heavy traffic flow, such as inner city or desert areas, early replacement may be required. (For scheduled maintenance information, please refer to the “Scheduled Maintenance Guide” or “Owner’s Manual Supplement”.)

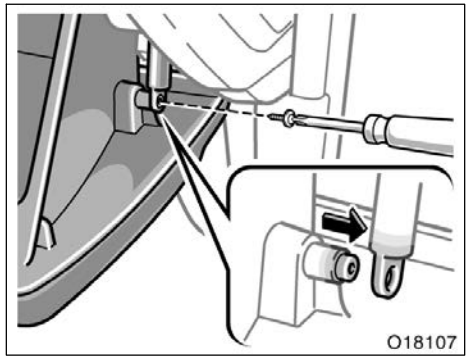


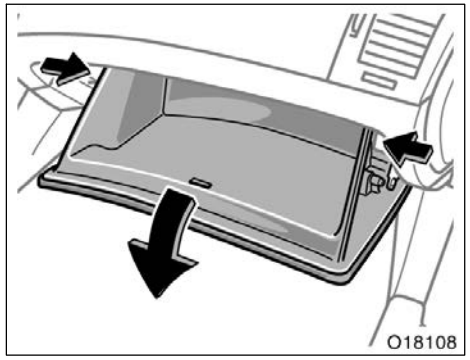


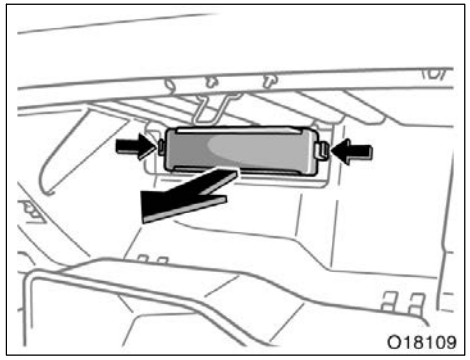


**REMOVAL METHOD:**

1. **Open the glove box. Remove the screw with a Phillips−head screwdriver and slide off the damper as shown.**
2. **Push in each side of the glove box to disconnect the claws.**
3. **Remove the filter cover while pushing in both ends of the cover.**

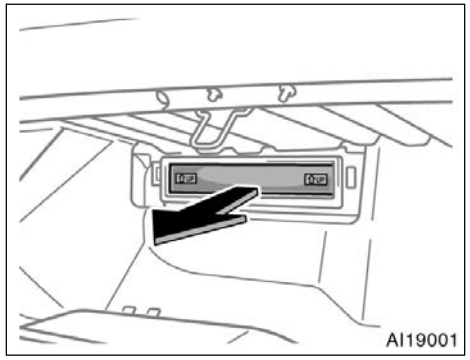


**4. Pull the filter out of the filter outlet.**

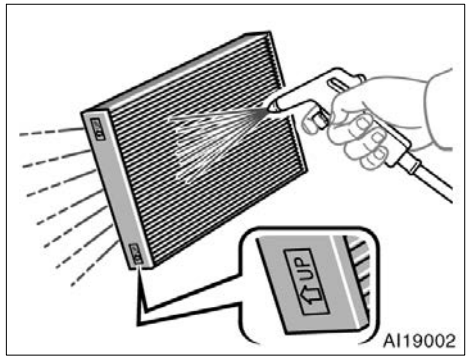


**CLEANING METHOD:**
**If the filter is dirty, clean by blowing compressed air through the filter from the downward side.**

Hold the air gun 5 cm (2 in.) from the filter and blow for approximately 2 minutes at 500 kPa (5.0 kgf/cm$^2$ or bar, 72 psi).

If it is not available, have the filter cleaned by your Toyota dealer.

***NOTICE***

***When cleaning the filter, do not clean the filter with water.***

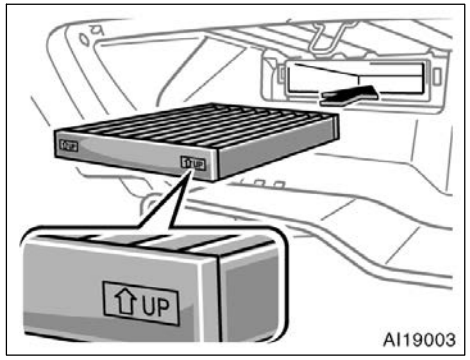


**REPLACEMENT METHOD:**
**When inserting the filter in the filter outlet, keep the "↑ UP" mark pointing up.**

***INFORMATION***

***The air filter should be installed properly in position. The use of air conditioning with the air filter removed may cause deteriorated dustproof performance and then affect air conditioning performance.***

# SECTION 1–10

## OPERATION OF INSTRUMENTS AND CONTROLS

### Other equipment


Center display . . . . . 244
Clock . . . . . 247
Compass . . . . . 247
Cigarette lighter and ashtrays . . . . . 252
Power outlets . . . . . 253
Garage door opener . . . . . 254
Glove box . . . . . 257
Auxiliary boxes . . . . . 258
Rear console box . . . . . 259
Cup holders . . . . . 260
Rear electric sunshade . . . . . 261
Storage box . . . . . 262
Grocery bag hooks . . . . . 262
Cargo net . . . . . 263
Floor mat . . . . . 263

## Center display—

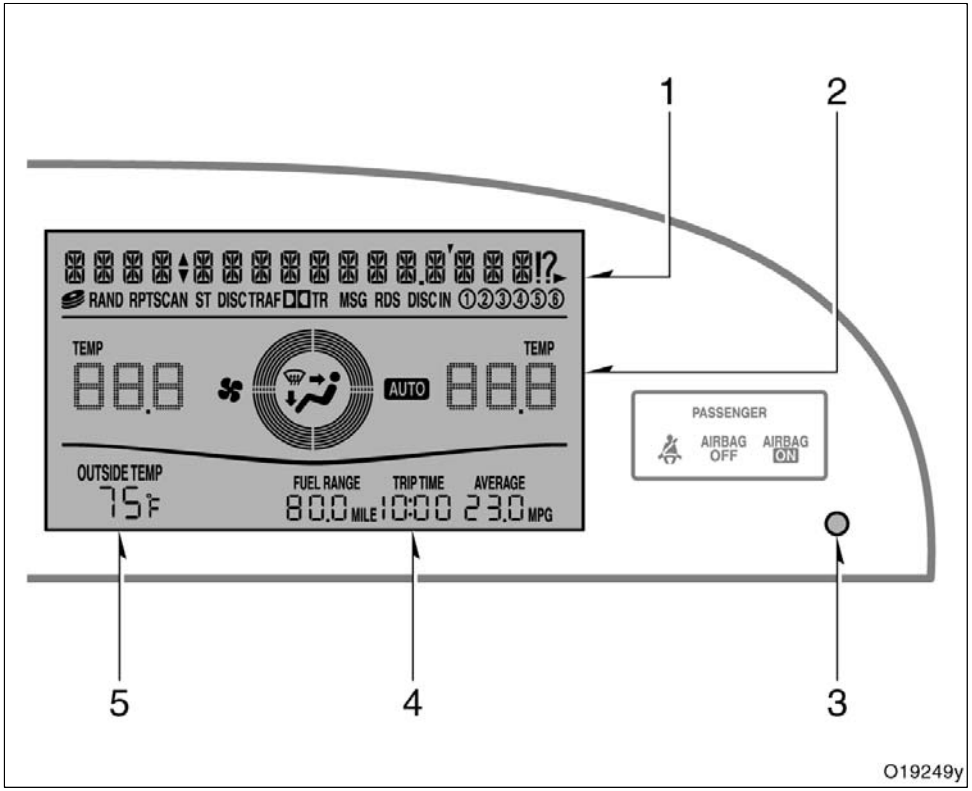


1. Audio display

   (For details, see “Audio system” on page 195 in Section 1–8.)
2. Air conditioning display

   (For details, see “Air conditioning system” on page 229 in Section 1–9.)
3. Pattern selector knob
4. Cruise information display
5. Outside temperature display

## —Before using the center display

**Operate the center display with the ignition switch on.**

When the ignition switch is set at ON, the last previously used mode displayed just before the ignition switch is turned off will appear.

If the electrical power source has been disconnected from the center display, the display will automatically be set to the initial mode.

When the instrument panel lights are turned on, the brightness of the display may be reduced.

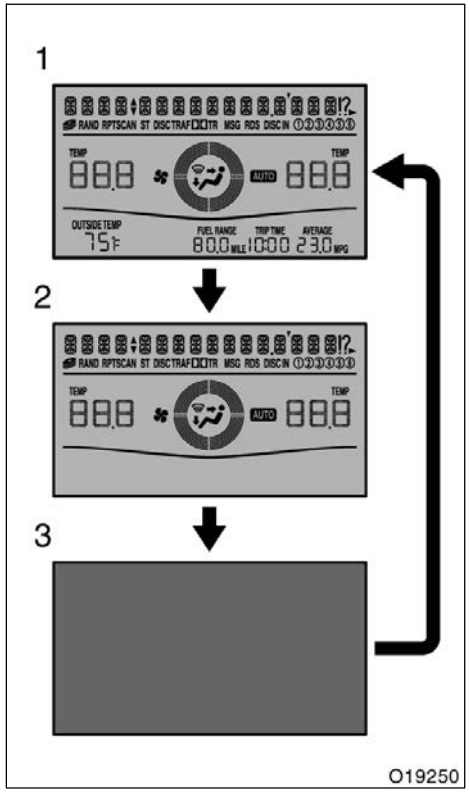


**Pattern selector knob**

**This knob is used to select the pattern of the display.**

Every time you push the pattern selector knob, the display illuminates in the following order.

1. All the display
2. Audio display and air conditioning display
3. Display off

**⚠ CAUTION**

**Do not adjust the display while the vehicle is moving. Be sure to adjust the display only when the vehicle is stopped.**

## —Outside temperature display

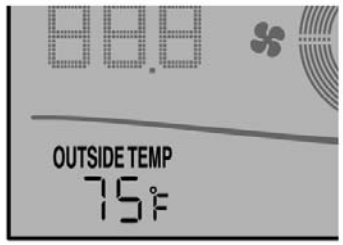


O19239

The outside temperature value is updated every 1 second.

The displayed temperature ranges from –30°C (–22°F) up to 50°C (122°F).

If an abnormality exists in the connection of the outside air temperature sensor, "––", "F" or "E" will appear on the display. If "––", "F" or "E" appears on the display, contact your Toyota dealer.

There may be a case that "––", "F" or "E" appears momentarily when the ignition switch is quickly set to ON. It is normal if it goes out soon.

## —Cruise information display

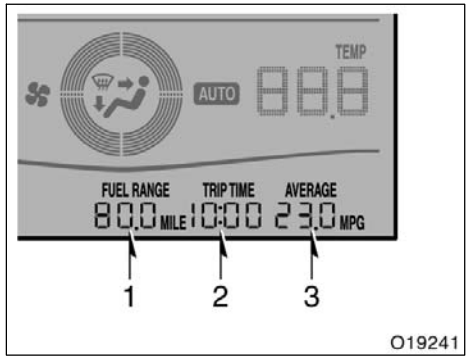


O19241

**1. Driving range ("FUEL RANGE")**

**The distance the vehicle can travel with the remaining fuel is calculated and displayed based on the quantity of remaining fuel and past fuel consumption.**

The displayed value is updated every 10 seconds.

Every time you refuel the vehicle, the driving range calculation is automatically reset.

The actual driving range varies with driving habits and road conditions. If fuel consumption is good, the driving range will be longer than indicated. If fuel consumption is poor, the driving range will be shorter than indicated.

**2. Elapsed time ("TRIP TIME")**

**The elapsed time after the engine starts is displayed.**

When the engine is started, driving time is counted from 0:00. Up to 99:59 (99 hours, 59 minutes) can be displayed. When the driving time exceeds 99:59, the counter returns to 0:00.

The calculation is reset when the ignition switch is turned off.

**3. Average fuel consumption after refueling ("AVERAGE")**

**Average fuel consumption after refueling is calculated and displayed based on total driving distance and total fuel consumption with the engine running.**

The displayed value is updated every 10 seconds.

Every time you refuel the vehicle, the average fuel consumption after refueling calculation is automatically reset.

## Clock

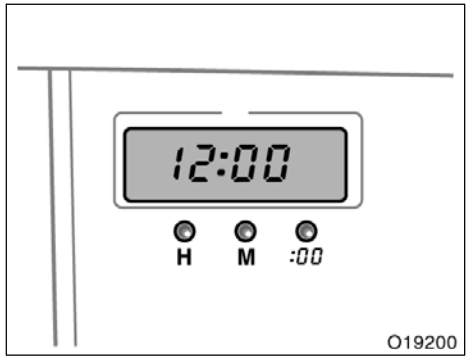


To reset the hour: Push the “H” button.
To reset the minutes: Push the “M” button.

If quick adjustment to a full hour is desired, push the “:00” button.

For example, if the “:00” button is depressed when the time is between 1:01—1:29, the time will change to 1:00. If the time is between 1:30—1:59, the time will change to 2:00.

The ignition switch must be set at ON.

If the electrical power source has been disconnected from the clock, the time display will automatically be set to 1:00 (one o’clock).

When the instrument panel lights are turned on, the brightness of the time indication may be reduced.

## Compass

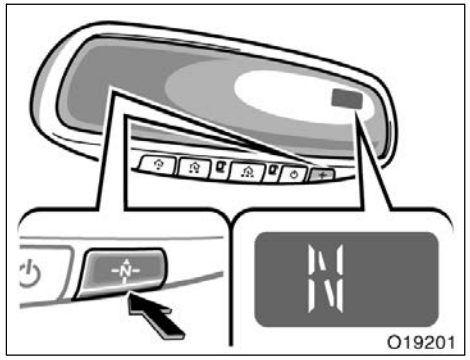


**The direction is indicated on the inside rear view mirror.**

If the ignition switch was turned off with the system on, the system will automatically turn back on when the ignition switch is turned on.

Push the “N” switch to turn the compass system on and off.

**The compass indicates the direction that the vehicle is heading. In the above case, it shows that the vehicle is heading north.**

| Displays | Directions |
|---|---|
| N | North |
| NE | Northeast |
| E | East |
| SE | Southeast |
| S | South |
| SW | Southwest |
| W | West |
| NW | Northwest |

The compass may not show the correct direction in the following conditions:

- The vehicle is stopped immediately after turning.
- The compass does not adjust while the vehicle is stopped.
- The ignition switch is turned off immediately after turning.
- The vehicle is on an inclined surface.
- The vehicle is in a place where the earth's magnetic field is subject to interference by artificial magnetic fields (underground parking, under a steel tower, between buildings, roof parking, near a crossing, near a large vehicle, etc.).
- The vehicle is magnetized. (There is a magnet or a metal object on or near the inside rear view mirror.)
- The battery has been disconnected.

If your vehicle is out of the set zone, refer to "CALIBRATING THE COMPASS" below to set the zone number.

If the deviation is small, the compass works to calibrate the direction automatically while the vehicle is in motion.

For additional precision or for complete calibrating, see "CALIBRATING THE COMPASS" below.

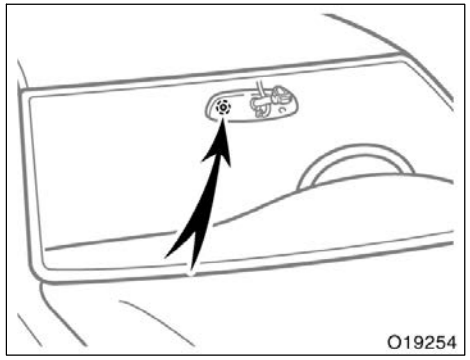


**The compass sensor is in the inside rear view mirror.**

***NOTICE***

***Do not put magnets or a metal object on or near the inside rear view mirror of the vehicle. Doing this may cause malfunction of the compass sensor.***

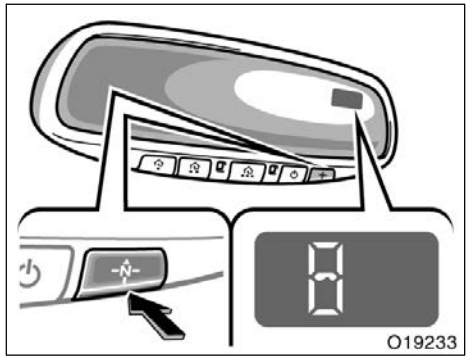


**CALIBRATING THE COMPASS (deviation calibration)**

The direction display on the compass deviates from the true direction determined by the earth's magnetic field. The angle of deviation varies according to the geographic position of the vehicle.

To adjust this deviation, stop the vehicle, then push and hold the "-N-" switch until the zone number appears on the display. Then push the "-N-" switch, referring to the following map to select the number of the zone where the vehicle is.

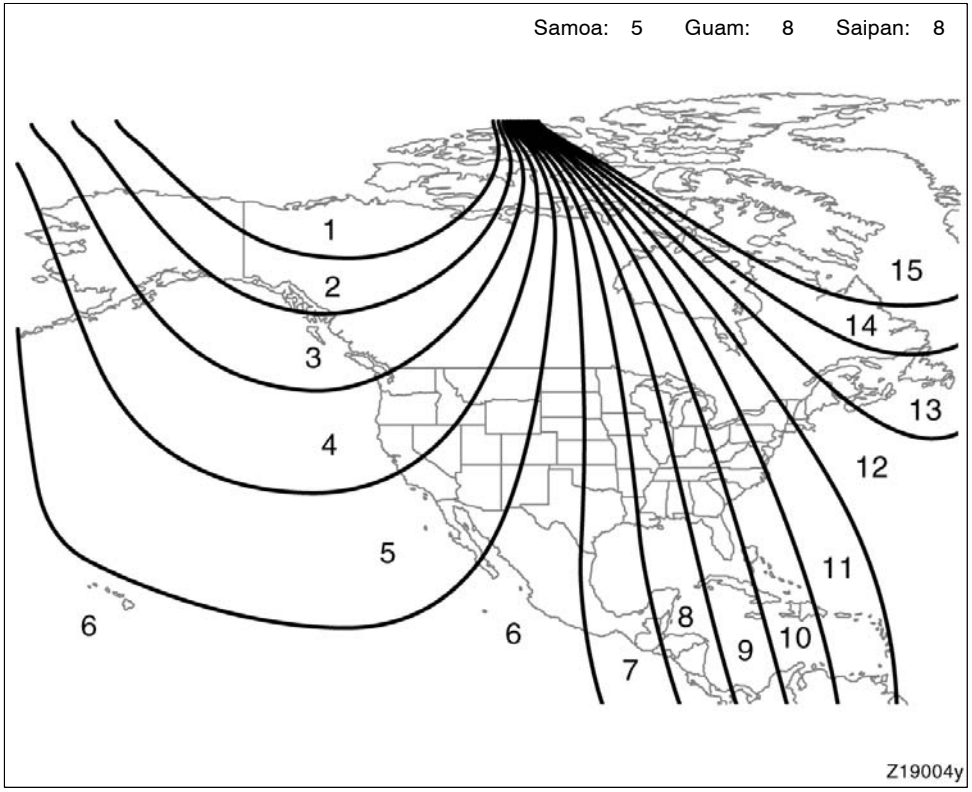


**Zone number**

After calibration, leaving the system for several seconds returns it to the compass mode.

**⚠ CAUTION**

**Do not adjust the display while the vehicle is moving. Be sure to adjust the display only when the vehicle is stopped.**

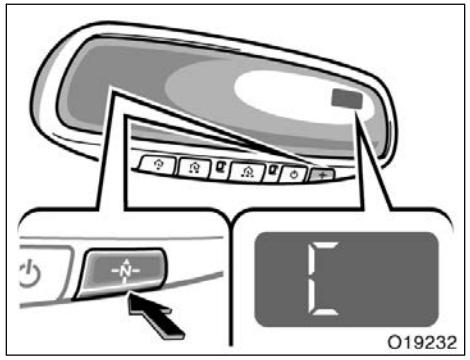


**CALIBRATING THE COMPASS (circling calibration)**

Sometimes the direction display on the compass may not change after a turn. To rectify this, stop the vehicle and push and hold the "N" switch until "C" appears on the display.

If "C" appears on the display because of a drastic change in the magnetic field, perform circling calibration.

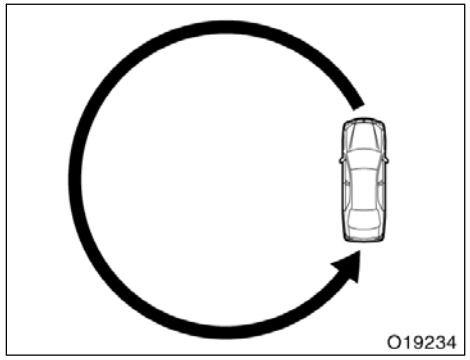


Drive the vehicle in a circle at 8 km/h (5 mph) or less. If there is not enough space to drive in a circle, drive around the block.

After driving 1 to 3 circles in the above method, calibration is completed when the direction is shown on the display.

If calibration cannot be performed because of the magnetized vehicle etc., take your vehicle to Toyota dealer.

**Perform circling calibration just after you have purchased your Toyota. And then always perform circling calibration after the battery has been removed, replaced or disconnected.**

- Do not perform circling calibration of the compass in a place where the earth's magnetic field is subject to interference by artificial magnetic fields (underground parking, under a steel tower, between buildings, roof parking, near a crossing, near a large vehicle, etc.).
- During calibration, do not operate electric systems (moon roof, power windows, etc.) as they may interfere with the calibration.

**⚠ CAUTION**

- **When doing the circling calibration, be sure to secure a wide space, and watch out for people and vehicles in the neighborhood. Do not violate any local traffic rules while performing circling calibration.**
- **Do not adjust the display while the vehicle is moving. Be sure to adjust the display only when the vehicle is stopped.**

## Cigarette lighter and ashtrays

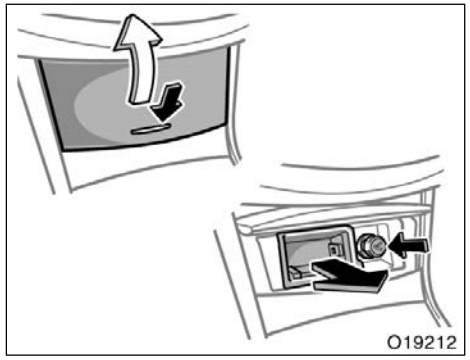


**Type A**

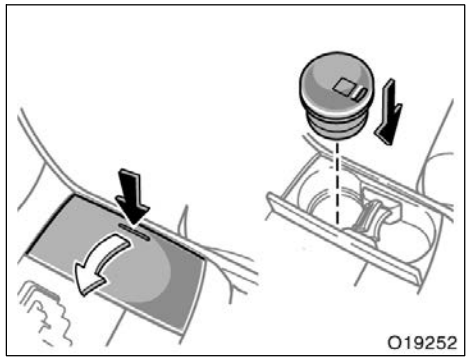


**Type B**

**CIGARETTE LIGHTER (type A)**

**To use the cigarette lighter, first open the ashtray lid, then press in the lighter. After it finishes heating up, it automatically pops out ready for use.**

If the engine is not running, the ignition switch must be set at ACC.

Do not hold the cigarette lighter pressed in.

Use a Toyota genuine cigarette lighter or equivalent for replacement.

**ASHTRAY**

**Type A: To use the ashtray, push the lid to open.**

**Type B: Open the lid of the cup holder and set the ashtray in it. It can be used outside the vehicle. To use the ashtray, raise the lid.**

When finished with your cigarette, thoroughly extinguish it in the ashtray to prevent other cigarette butts from catching fire. After using the ashtray, close the lid completely.

To detach the ashtray, pull it out.

**⚠ CAUTION**

**To reduce the chance of injury in case of an accident or sudden stop while driving, always completely close the ashtray after use.**

## Power outlets

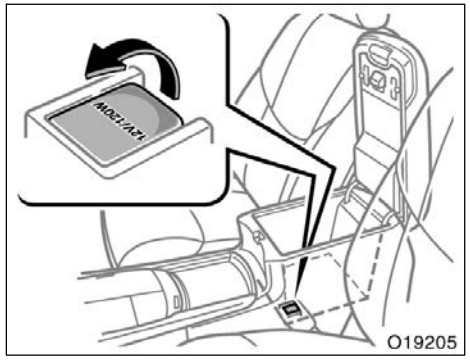


**Rear console box**

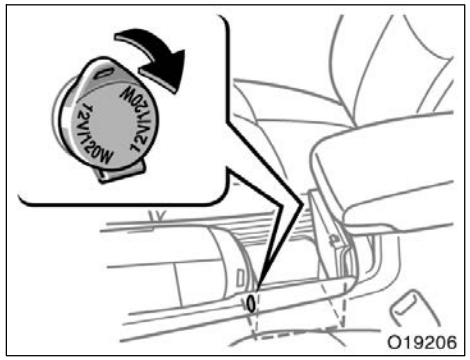


**Center auxiliary box**

**The power outlets are designed for power supply for car accessories.**

The ignition switch must be set at ACC or ON for the power outlet to be used.

***NOTICE***

- ***To prevent the fuse from being blown, do not use the electricity over the total vehicle capacity of 12 V/120W.***
- ***To prevent the battery from being discharged, do not use the power outlet longer than necessary when the engine is not running.***
- ***Close the power outlet lids when the power outlets are not in use. Inserting anything other than an appropriate plug that fits the outlet, or allowing any liquid to get into the outlet may cause electrical failure or short circuits.***

## Garage door opener

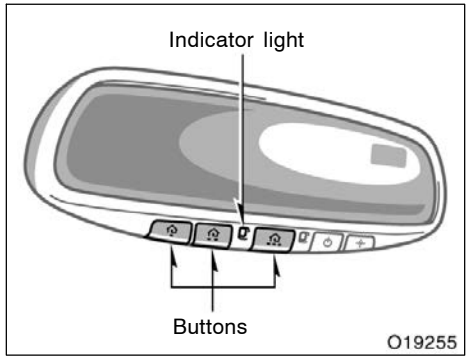


**The garage door opener (HomeLink® Universal Transceiver) is manufactured under license from HomeLink® and can be programmed to operate garage doors, gates, entry doors, door locks, home lighting systems, and security systems, etc.**

**(a) Programming the HomeLink®**

**The HomeLink® in your vehicle has 3 buttons and you can store one program for each button.**

To ensure correct programming into the HomeLink®, install a new battery in the hand–held transmitter prior to programming.

The battery side of the hand–held transmitter must be pointed away from the HomeLink® during the programming process.

For Canadian users, follow the procedure in “Programming an entrance gate/Programming all devices in the Canadian market”.

1. Decide which of 3 HomeLink® buttons you want to program.

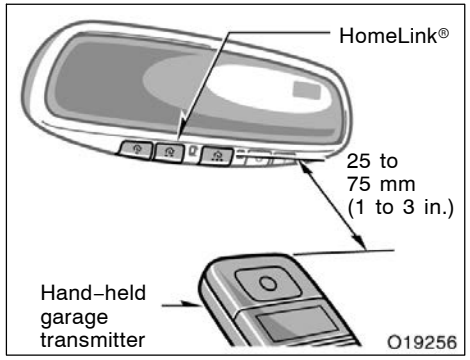


2. Place your hand–held garage transmitter 25 to 75 mm (1 to 3 in.) away from the surface of the HomeLink®.

Keep the indicator light on the HomeLink® in view while programming.

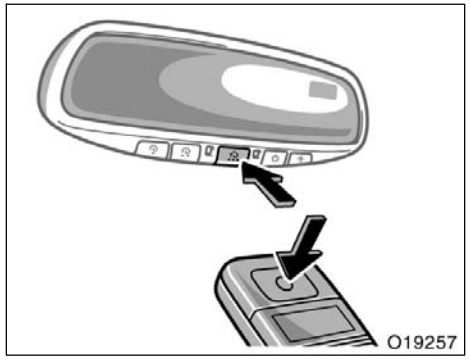


3. Simultaneously press and hold the hand–held garage transmitter button along with the selected HomeLink® button.

Do not release the buttons until step 4 has been completed.

4. When the indicator light on the HomeLink® changes from a slow to a rapid flash after 20 seconds, you can release both buttons.

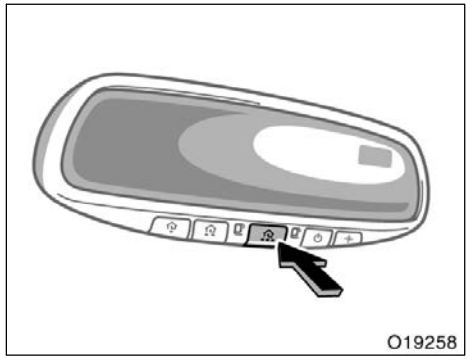


5. Test the operation of the HomeLink® by pressing the newly programmed button. If programming a garage door opener, check to see if the garage door opens and closes.

If the garage door does not operate, identify if your garage transmitter is of the "Rolling Code" type. Press and hold the programmed HomeLink® button. The garage door has the rolling code feature if the indicator light (on the HomeLink®) flashes rapidly and then remains lit after 2 seconds. If your garage transmitter is the "Rolling Code" type, proceed to the heading "Programming a rolling code system".

6. Repeat steps 2 through 5 for each remaining HomeLink® button to program another device.

**Programming a rolling code system**

**If your device is "Rolling Code" equipped, it is necessary to follow steps 1 through 4 under the heading "Programming the HomeLink®" before proceeding with the steps listed below.**

1. Locate the "training" button on the ceiling mounted garage door opener motor. The exact location and color of the button may vary by brand of garage door opener. Refer to the owner's guide supplied by the garage door opener manufacturer for the location of this "training" button.
2. Press the "training" button on the ceiling mounted garage door opener motor.

Following this step, you have 30 seconds in which to initiate step 3 below.

3. Press and release the vehicle's programmed HomeLink® button twice. The garage door may open. If the door does open, the programming process is complete. If the door does not open, press and release the button a third time. This third press and release will complete the programming process by opening the garage door.

The ceiling mounted garage door opener motor should now recognize the HomeLink® unit and be able activate the garage door up/down.

4. Repeat steps 1 through 3 for each remaining HomeLink® button to program another rolling code system.

**Programming an entrance gate/Programming all devices in the Canadian market**

1. Decide which of the 3 HomeLink® buttons you want to program.
2. Place your hand–held gate/device transmitter 25 to 75 mm (1 to 3 in.) away from the surface of the HomeLink®.

Keep the indicator light on the HomeLink® in view while programming.

3. Press and hold the selected HomeLink® button.
4. Continuously press and release (cycle) the hand–held gate/device transmitter button every 2 seconds until step 5 is complete.
5. When the indicator light on the HomeLink® changes from a slow to a rapid flash after 20 seconds, you can release both buttons.
6. Test the operation of the HomeLink® by pressing the newly programmed button. Check to see if the gate/device operates correctly.
7. Repeat steps 1 through 6 for each remaining HomeLink® button to program another device.

**Programming other devices**

To program other devices such as home security systems, home door locks or lighting, contact your authorized Toyota dealer for assistance.

**Reprogramming a button**

Individual HomeLink® buttons cannot be erased, however, to reprogram a single button, follow the procedure “Programming the HomeLink®”.

**(b) Operating the HomeLink®**

To operate the HomeLink®, press the appropriate HomeLink® button to activate the programmed device. The HomeLink® indicator light should come on. The HomeLink® continues to send the signal for up to 20 seconds as long as the button is pressed.

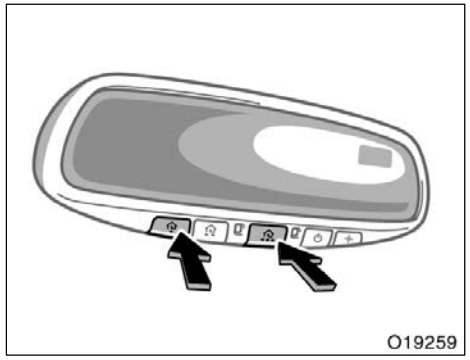


**(c) Erasing the entire HomeLink® memory (all three programs)**

To erase all previously programmed codes at one time, press and hold down the 2 outside buttons for 20 seconds until the indicator light flashes.

If you sell your vehicle, be sure to erase the programs stored in the HomeLink® memory.

**For additional programming assistance with your HomeLink® Universal Transceiver call the:**

- Toyota Customer Experience Center at 1–800–331–4331 (U.S.A.)
- Toyota Canada Customer Interaction Centre at 1–888–869–6828 (Canada)

Refer to HomeLink® on the internet at: WWW.HOMELINK.COM

**⚠ CAUTION**

- **When programming the HomeLink® Universal Transceiver, you may be operating a garage door or other device. Make sure people and objects are out of the way of the garage door or other device to prevent potential harm or damage.**
- **Do not use this HomeLink® Universal Transceiver with any garage door opener that lacks the safety stop and reverse feature as required by federal safety standards. (This includes any garage door opener model manufactured before April 1, 1982.) A garage door opener which cannot detect an object (signaling the door to stop and reverse), does not meet current federal safety standards. Using a garage door opener without these features increases risk of serious injury or death.**

This device complies with Part 15 of the FCC Rules and with RSS–210 of the IC Rules. Operation is subject to the following two conditions: (1) This device may not cause harmful interference, and (2) this device must accept any interference that may be received, including interference that may cause undersired operation.

**WARNING: This transmitter has been tested and complies with FCC and IC rules. Changes or modifications not expressly approved by the party responsible for compliance could void the user's authority to operate the device.**

## Glove box

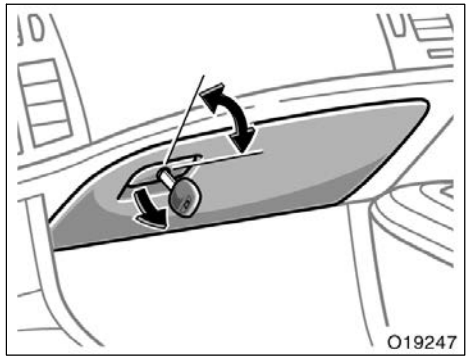


**To use the glove box:**

Open by pulling the lever.

Lock by inserting the master key (vehicles with key cylinder–type ignition switch) or mechanical key (vehicles with smart key system) and turning it clockwise.

Unlock by inserting the master key (vehicles with key cylinder–type ignition switch) or mechanical key (vehicles with smart key system) and turning it counterclockwise.

With the instrument panel lights on, the glove box light will come on when the glove box is open.

**CAUTION**

**To reduce the chance of injury in case of an accident or a sudden stop, always keep the glove box door closed while driving.**

## Auxiliary boxes

**To use the auxiliary boxes, open the lids as shown in the following illustrations.**

**CAUTION**

- **To reduce the chance of injury in case of an accident or sudden stop, always keep the auxiliary box closed while driving.**
- **Type A—It is designed for holding a light objects, do not place any heavy objects in it. Heavy objects may cause the holder to open and contents to fly out resulting in injuries.**

***NOTICE***

***Type A—During hot weather, the interior of the vehicle becomes very hot. Do not leave anything flammable or deformable such as a lighter, glasses, etc. inside.***

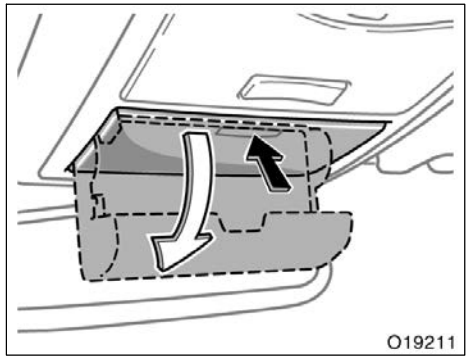


**Type A (ceiling)**

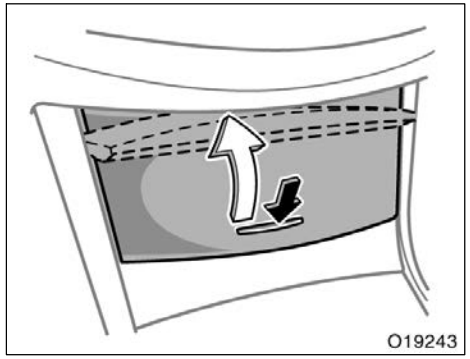


**Type B (front console)**

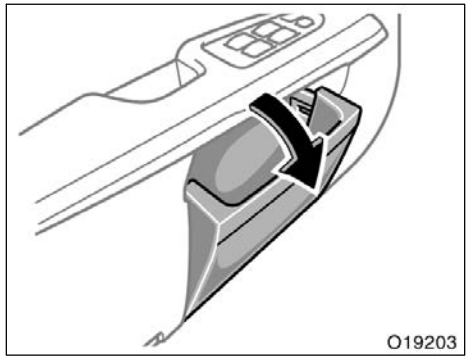


Type C (door panel)

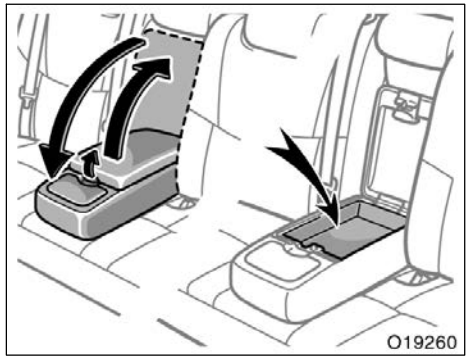


Type E (rear seat)

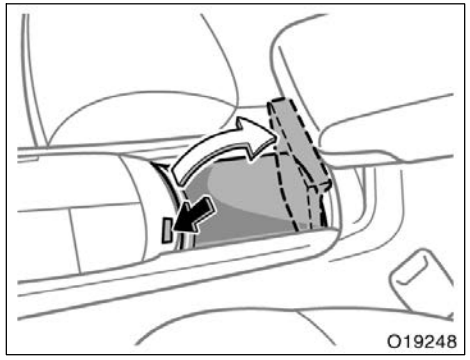


Type D (center console)

## Rear console box

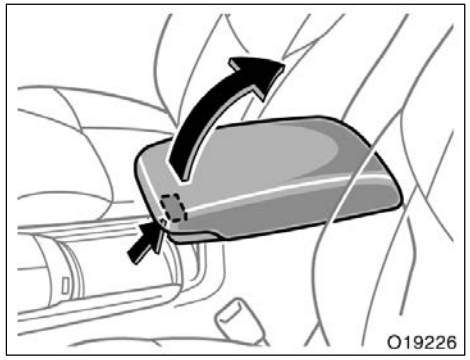


**To access the rear console box, pull up the lock release lever while raising the rear console box lid.**

**⚠ CAUTION**

**To reduce the chance of injury in case of an accident or a sudden stop, always keep the console box closed while driving.**

## Cup holders

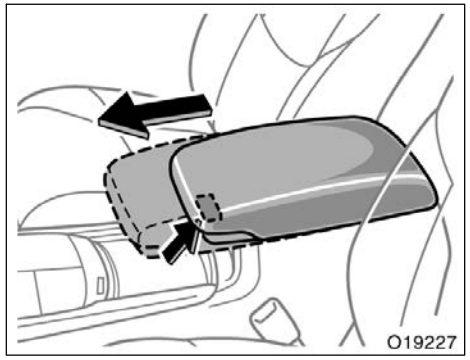


**It is possible to use the rear console box lid as an armrest by moving it as shown in the illustration.**

When using the console box, return the lid to its original position.

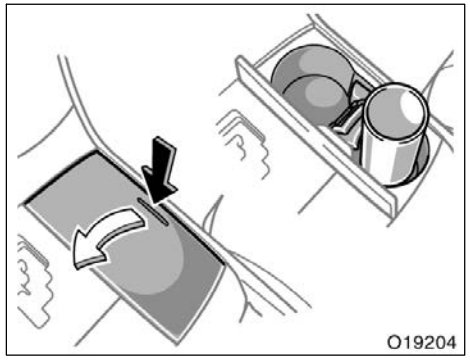


**Type A (center console)**

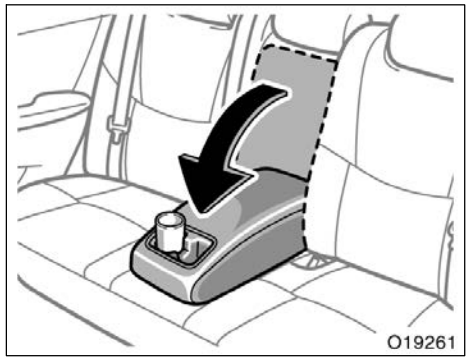


**Type B (rear armrest)**

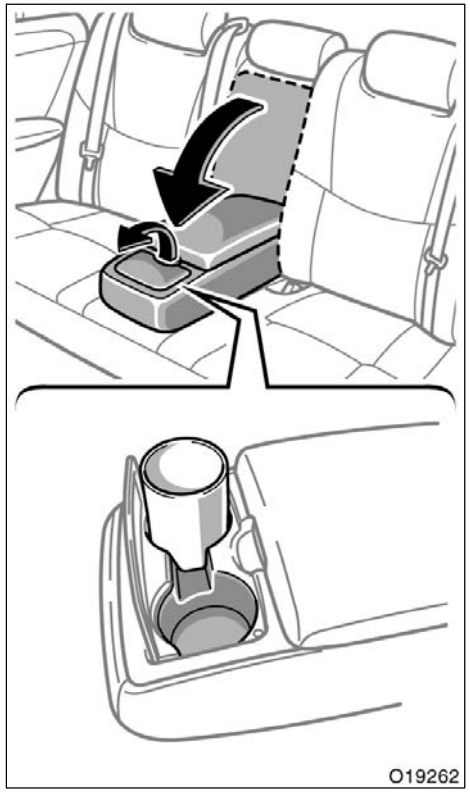


**Type C (rear armrest)**

**The cup holders are designed for holding cups or drink−cans securely.**

To use the cup holder, do the following.

Type A—Push on the lid.

Type B—Pull down the rear armrest.

Type C—Pull down the rear armrest and open the lid on the armrest.

**⚠ CAUTION**

- **Do not place anything else other than cups or drink−cans on the cup holder, as such items may be thrown about in the compartment and possibly injure people in the vehicle during sudden braking or in an accident.**
- **To reduce the chance of injury in case of an accident or sudden stop while driving, keep the cup holder closed when it is not in use.**

## Rear electric sunshade

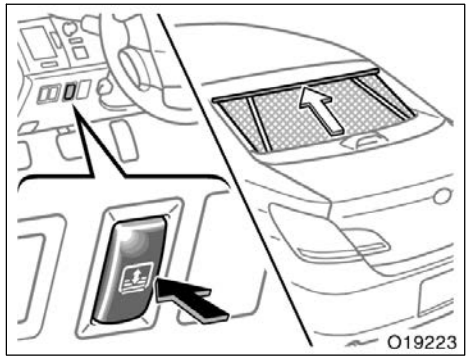


**To raise the rear electric sunshade, push the switch. To lower the sunshade, push the switch again.**

The sunshade works when the ignition switch is set at ON.

**When the selector lever is shifted into the "R" position while the sunshade is raised, the sunshade will be automatically lowered. To raise the sunshade, move the selector lever out of "R" position and push the switch.**

**⚠ CAUTION**

- **Do not touch the brackets fastening the sunshade to avoid injuring your fingers or hands.**
- **Do not put your fingers in the sunshade groove while the sunshade is operating to avoid getting them caught or injured by the runner.**

**NOTICE**

- ***To prevent the vehicle battery from being discharged, always operate the sunshade while the engine is running.***
- ***Observe the following to avoid damage and/or malfunction:***

  ***Do not overload the sunshade motor and other parts (for instance by pushing down on the sunshade bracket while it is opening).***

  ***Do not place anything where they may hinder the opening/closing of the sunshade.***

  ***Do not affix anything to the sunshade.***

  ***Clean the sunshade groove if there is any foreign matter or dust on it.***

  ***Do not operate the rear electric sunshade repeatedly for a long time as its motor may overheat.***

## Storage box

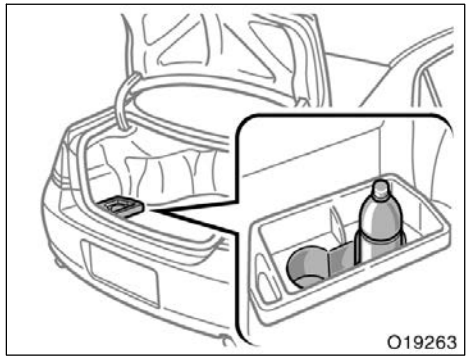


**This box is designed to hold things like bottles.**

## Grocery bag hooks

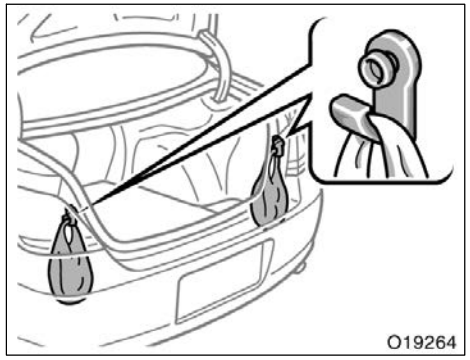


**This hook is designed to hang things like grocery bags.**

**NOTICE**

***To prevent damage to the hook, avoid hanging heavy loads on it.***

## Cargo net

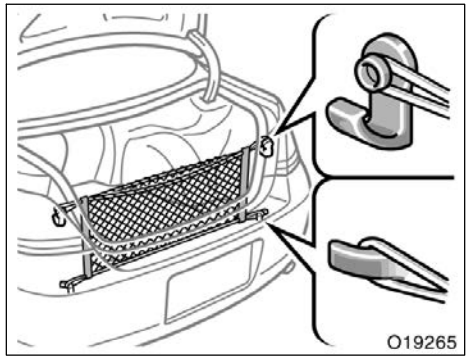


**To secure belongings, hang the cargo net on the hooks.**

***NOTICE***

- ***Do not use the net to secure sharp or heavy objects. The net will tear off.***
- ***Be sure not to twist the net when hooking.***

## Floor mat

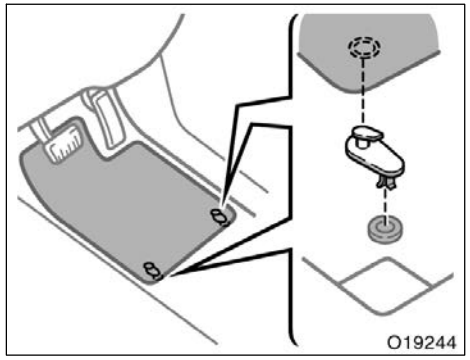


**Use a floor mat of the correct size.**

If the vehicle carpet and floor mat have 2 holes, then they are designed for use with 2 locking clips. Attach the floor mat to the vehicle carpet using the clips. Lock the clips into the holes in the vehicle carpet.

**⚠ CAUTION**

**Make sure the floor mat is properly placed on the vehicle carpet. If the floor mat slips and interferes with the movement of the pedals during driving, it may cause an accident.**

# SECTION 2

# INFORMATION BEFORE DRIVING YOUR TOYOTA

## Information before driving your toyota


Break–in period . . . . . 266
Fuel . . . . . 266
Fuel pump shut off system . . . . . 268
Operation in foreign countries . . . . . 268
Three–way catalytic converters . . . . . 269
Engine exhaust cautions . . . . . 270
Facts about engine oil consumption . . . . . 270
Iridium–tipped spark plugs . . . . . 272
Brake system . . . . . 272
Brake pad wear limit indicators . . . . . 276
Your Toyota's identification . . . . . 277
Theft prevention labels . . . . . 278
Suspension and chassis . . . . . 278
Tire information . . . . . 279
Vehicle load limits . . . . . 289
Cargo and luggage . . . . . 290
Types of tires . . . . . 292

## Break–in period

**Drive gently and avoid high speeds.**

Your vehicle does not need an elaborate break–in. But following a few simple tips for the first 1600 km (1000 miles) can add to the future economy and long life of your vehicle:

- Avoid full throttle acceleration when starting and driving.
- Avoid racing the engine.
- Try to avoid hard stops during the first 300 km (200 miles).
- Do not drive for a long time at any single speed, either fast or slow.

## Fuel

### FUEL TYPE

**Your new vehicle must use only unleaded gasoline.**

To help prevent gas station mix–ups, your Toyota has a smaller fuel tank opening. The special nozzle on pumps with unleaded fuel will fit it, but the larger standard nozzle on pumps with leaded gas will not.

At a minimum, the gasoline you use should meet specifications of ASTM D4814 in the U.S.A. and CGSB 3.5–M93 in Canada.

***NOTICE***

***Do not use leaded gasoline. Use of leaded gasoline will cause the three–way catalytic converter to lose its effectiveness and the emission control system to function improperly. Also, this can increase maintenance costs.***

### OCTANE RATING

**Select Octane Rating 87 (Research Octane Number 91) or higher.**

Use of unleaded gasoline with an octane rating or research octane number lower than stated above will cause persistent heavy knocking. If it is severe, this will lead to engine damage.

**If your engine knocks...**

If you detect heavy knocking even when using the recommended fuel, or if you hear steady knocking while holding a steady speed on level roads, consult your Toyota dealer.

However, occasionally, you may notice light knocking for a short time while accelerating or driving up hills. This is normal and there is no need for concern.

## GASOLINE CONTAINING DETERGENT ADDITIVES

**Toyota recommends the use of gasoline that contains detergent additives to avoid build–up of engine deposits.**

However, all gasoline sold in the U.S. contains detergent additives to keep clean and/or clean intake systems.

## QUALITY GASOLINE

**Automotive manufacturers in the U.S., Europe and Japan have developed a specification for quality fuel named World–Wide Fuel Charter (WWFC) that is expected to be applied world wide. The WWFC consists of four categories that depend on required emission levels. In the U.S., category 4 has been adopted. The WWFC improves air quality by providing for better emissions in vehicle fleets, and customer satisfaction through better vehicle performance.**

## CLEANER BURNING GASOLINE

**Cleaner burning gasoline, including reformulated gasoline that contains oxygenates such as ethanol or MTBE is available in many areas.**

Toyota recommends the use of cleaner burning gasoline and appropriately blended reformulated gasoline. These types of gasoline provide excellent vehicle performance, reduce vehicle emissions, and improve air quality.

## OXYGENATES IN GASOLINE

**Toyota allows the use of oxygenate blended gasoline where the oxygenate content is up to 10% ethanol or 15% MTBE. If you use gasohol in your Toyota, be sure that it has an octane rating no lower than 87.**

Toyota does not recommend the use of gasoline containing methanol.

## GASOLINE CONTAINING MMT

**Some gasoline contain an octane enhancing additive called MMT (Methylcyclopentadienyl Manganese Tricarbonyl).**

Toyota does not recommend the use of gasoline that contains MMT. If fuel containing MMT is used, your emission control system may be adversely affected. The Malfunction Indicator Lamp on the instrument cluster may come on. If this happens, contact your Toyota dealer for service.

## GASOLINE QUALITY

In a very few cases, you may experience driveability problems caused by the particular gasoline that you are using. If you continue to have unacceptable driveability, try changing gasoline brands. If this does not rectify your problem, then consult your Toyota dealer.

**NOTICE**

- ***Do not use gasohol other than stated above. It will cause fuel system damage or vehicle performance problems.***
- ***If driveability problems are encountered (poor hot starting, vaporizing, engine knock, etc.), discontinue the use.***
- ***Take care not to spill gasohol during refueling. Gasohol may cause paint damage.***

**FUEL TANK CAPACITY**

70 L (18.5 gal., 15.4 Imp. gal.)

## Fuel pump shut off system

The fuel pump shut off system stops supplying fuel to the engine to minimize the risk of fuel leakage when the engine stalls or an airbag inflates upon collision. To restart the engine after the fuel pump shut off system activates, set the ignition switch to ACC or off once and start it.

**⚠ CAUTION**

**Inspect the ground under the vehicle before restarting the engine. If you find that fuel has leaked onto the ground, the fuel system has been damaged and is in need of repair. In this case, do not restart the engine.**

## Operation in foreign countries

**If you plan to drive your Toyota in another country...**

**First,** comply with the vehicle registration laws.

**Second,** confirm the availability of the correct fuel (unleaded and minimum octane number).

## Three−way catalytic converters

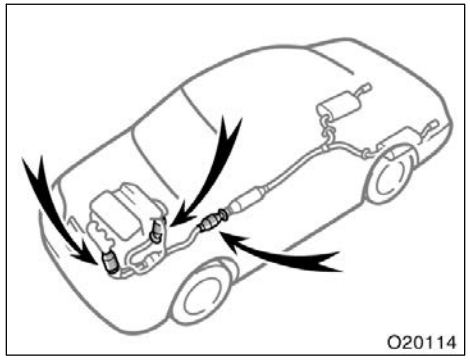


**The three−way catalytic converters are emission control devices installed in the exhaust system.**

The purpose is to reduce pollutants in the exhaust gas.

**⚠ CAUTION**

- **Keep people and combustible materials away from the exhaust pipe while the engine is running. The exhaust gas is very hot.**
- **Do not drive, idle or park your vehicle over anything that might burn easily such as grass, leaves, paper or rags.**

***NOTICE***

***A large amount of unburned gases flowing into the three−way catalytic converter may cause it to overheat and create a fire hazard. To prevent this and other damage, observe the following precautions:***

- ***Use only unleaded gasoline.***
- ***Do not drive with an extremely low fuel level; running out of fuel could cause the engine to misfire, creating an excessive load on the three−way catalytic converter.***
- ***Do not allow the engine to run at idle speed for more than 20 minutes.***
- ***Avoid racing the engine.***
- ***Do not push−start or pull−start your vehicle.***
- ***Do not turn off the ignition while the vehicle is moving.***
- ***Keep your engine in good running order. Malfunctions in the engine electrical system, electronic ignition system/distributor ignition system or fuel system could cause an extremely high three−way catalytic converter temperature.***
- ***If the engine becomes difficult to start or stalls frequently, take your vehicle in for a check−up as soon as possible. Remember, your Toyota dealer knows your vehicle and its three−way catalytic converter system best.***
- ***To ensure that the three−way catalytic converter and the entire emission control system operate properly, your vehicle must receive the periodic inspections required by the Toyota Maintenance Schedule. For scheduled maintenance information, refer to the "Scheduled Maintenance Guide" or "Owner's Manual Supplement".***

## Engine exhaust cautions

**⚠ CAUTION**

- **Avoid inhaling the engine exhaust. It contains carbon monoxide, which is a colorless and odorless gas. It can cause unconsciousness or even death.**
- **Make sure the exhaust system has no holes or loose connections. The system should be checked from time to time. If you hit something, or notice a change in the sound of the exhaust, have the system checked immediately.**
- **Do not run the engine in a garage or enclosed area except for the time needed to drive the vehicle in or out. The exhaust gases cannot escape, making this a particularly dangerous situation.**
- **Do not remain for a long time in a parked vehicle with the engine running. If it is unavoidable, however, do so only in an unconfined area and adjust the heating or cooling system to force outside air into the vehicle.**
- **Keep the trunk lid closed while driving. An open or unsealed trunk lid may cause exhaust gases to be drawn into the vehicle.**
- **To allow proper operation of your vehicle's ventilation system, keep the inlet grilles in front of the windshield clear of snow, leaves, or other obstructions.**
- **If you smell exhaust fumes in the vehicle, open the windows and close the trunk lid to ensure plenty of fresh air enters the vehicle. If you can smell exhaust fumes even though there are no other vehicles in the surrounding area, have your vehicle checked by your Toyota dealer. Continued inhalation of exhaust fumes can lead to death by gas poisoning.**

## Facts about engine oil consumption

### FUNCTIONS OF ENGINE OIL

Engine oil has the primary functions of lubricating and cooling the inside of the engine, and plays a major role in maintaining the engine in proper working order.

### ENGINE OIL CONSUMPTION

**It is normal that an engine should consume some engine oil during normal engine operation. The causes of oil consumption in a normal engine are as follows.**

- Oil is used to lubricate pistons, piston rings and cylinders. A thin film of oil is left on the cylinder wall when a piston moves downwards in the cylinder. High negative pressure generated when the vehicle is decelerating sucks some of this oil into the combustion chamber. This oil as well as some part of the oil film left on the cylinder wall is burned by the high temperature combustion gases during the combustion process.

- Oil is also used to lubricate the stems of the intake valves. Some of this oil is sucked into the combustion chamber together with the intake air and is burned along with the fuel. High temperature exhaust gases also burn the oil used to lubricate the exhaust valve stems.

**The amount of engine oil consumed depends on the viscosity of the oil, the quality of the oil and the conditions the vehicle is driven under.**

More oil is consumed by high–speed driving and frequent acceleration and deceleration.

A new engine consumes more oil, since its pistons, piston rings and cylinder walls have not become conditioned.

**Oil consumption:** Max. 1.0 L per 1000 km (1.1 qt./600 miles, 0.9 Imp. qt./600 miles)

**When judging the amount of oil consumption, note the that oil may become diluted and make it difficult to judge the true level accurately.**

As an example, if a vehicle is used for repeated short trips, and consumes a normal amount of oil, the dipstick may not show any drop in the oil level at all, even after 1000 km (600 miles) or more. This is because the oil is gradually becoming diluted with fuel or moisture, making it appear that the oil level has not changed.

The diluting ingredients evaporate out when the vehicle is then driven at high speeds, as on an expressway, making it appear that oil is excessively consumed after driving at high speeds.

**IMPORTANCE OF ENGINE OIL LEVEL CHECK**

One of the most important points in proper vehicle maintenance is to keep the engine oil at the optimum level so that oil function will not be impaired. Therefore, it is essential that the oil level be checked regularly. Toyota recommends that the oil level be checked every time you refuel the vehicle.

***NOTICE***

***Failure to check the oil level regularly could lead to serious engine trouble due to insufficient oil.***

For detailed information on oil level check, see “Checking the engine oil level” on page 356 in Section 7–2.

## Iridium–tipped spark plugs

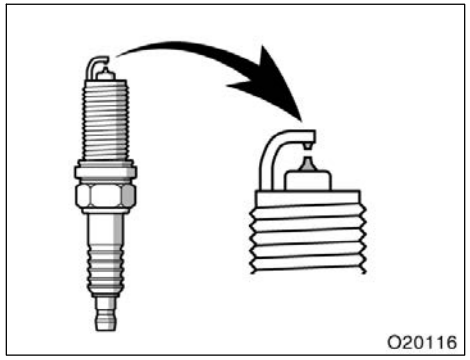


**Your engine is fitted with iridium–tipped spark plugs.**

***NOTICE***

***Use only Toyota genuine iridium–tipped spark plugs and do not adjust gaps for your engine performance and smooth driveability.***

For details about the spark plug type, see “Service specifications” on page 383 in Section 8.

## Brake system

The tandem master cylinder brake system is a hydraulic system with two separate sub–systems. If either sub–system should fail, the other will still work. However, the pedal will be harder to press, and your stopping distance will increase. Also, the brake system warning light may come on.

**CAUTION**

**Do not drive your vehicle with only a single brake system. Have your brakes fixed immediately.**

### BRAKE BOOSTER

The brake booster uses engine vacuum to power–assist the brakes. If the engine should quit while you are driving, you can bring the vehicle to a stop with normal pedal pressure. There is enough reserved vacuum for one or two stops—but no more!

**CAUTION**

- **Do not pump the brake pedal if the engine stalls. Each push on the pedal uses up your reserved vacuum.**
- **Even if the power assist is completely lost, the brakes will still work. But you will have to push the pedal hard, much harder than normal. And your braking distance will increase.**

## ANTI–LOCK BRAKE SYSTEM

**The anti–lock brake system is designed to automatically help prevent lock–up of the wheels during a sudden braking or braking on slippery road surfaces. This assists in providing directional stability and steering performance of the vehicle under these circumstances.**

**Effective way to press the ABS brake pedal:** When the anti–lock brake system function is in action, you may feel the brake pedal pulsating and hear a noise. In this situation, to let the anti–lock brake system work for you, just hold the brake pedal down more firmly. Do not pump the brake in a panic stop. This will result in reduced braking performance.

The anti–lock brake system becomes operative after the vehicle has accelerated to a speed in excess of approximately 10 km/h (6 mph). It stops operating when the vehicle decelerates to a speed below approximately 5 km/h (3 mph).

Depressing the brake pedal on slippery road surfaces such as on a manhole cover, a steel plate at a construction site, joints in a bridge, etc. on a rainy day tends to activate the anti–lock brake system.

You may hear a click or motor sound in the engine compartment for a few seconds when the engine is started or just after the vehicle is started. This means that the anti–lock brake system is in the self check mode, and does not indicate a malfunction.

**When the anti–lock brake system is activated, the following conditions may occur. They do not indicate a malfunction of the system:**

- You may hear the anti–lock brake system operating and feel the brake pedal pulsating and the vibrations of the vehicle body and steering wheel. You may also hear the motor sound in the engine compartment even after the vehicle is stopped.
- At the end of the anti–lock brake system activation, the brake pedal may move a little forward.

**⚠ CAUTION**

**Do not overestimate the anti–lock brake system: Although the anti–lock brake system assists in providing vehicle control, it is still important to drive with all due care and maintain a moderate speed and safe distance from the vehicle in front of you, because there are limits to the vehicle stability and effectiveness of steering wheel operation even with the anti–lock brake system on.**

**If tire grip performance exceeds its capability, or if hydroplaning occurs during high speed driving in the rain, the anti–lock brake system does not provide vehicle control.**

**Anti–lock brake system is not designed to shorten the stopping distance: Always drive at a moderate speed and maintain a safe distance from the vehicle in front of you. Compared with vehicles without an anti–lock brake system, your vehicle may require a longer stopping distance in the following cases:**

- **Driving on rough, gravel or snow–covered roads.**
- **Driving with tire chains installed.**
- **Driving over the steps such as the joints on the road.**
- **Driving on roads where the road surface is pitted or has other differences in surface height.**

**Install all 4 tires of specified size at appropriate pressure: The anti–lock brake system detects vehicle speeds using the speed sensors for respective wheels' turning speeds. The use of tires other than specified may fail to detect the accurate turning speed resulting in a longer stopping distance.**

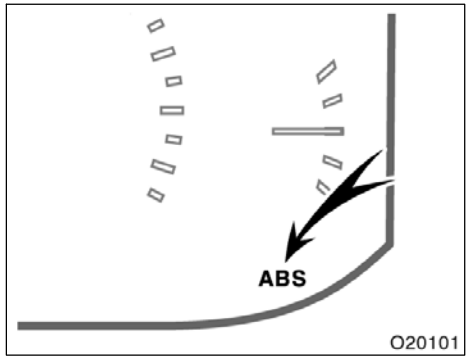


**Type A**

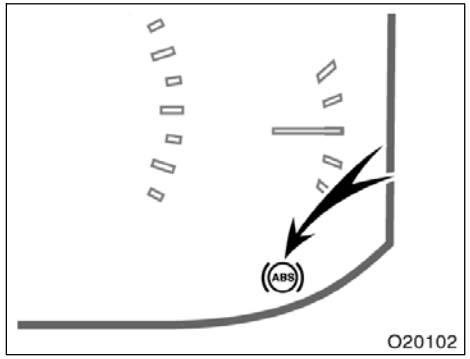


**Type B**

**"ABS" warning light**

**Vehicles without the vehicle stability control system—**

The light comes on when the ignition switch is set at ON. If the anti–lock brake system works properly, the light turns off after a few seconds. Thereafter, if the system malfunctions, the light comes on again.

When the "ABS" warning light is on (and the brake system warning light is off), the anti–lock brake system does not operate, but the brake system still operates conventionally.

When the "ABS" warning light is on (and the brake system warning light is off), the anti–lock brake system does not operate so that the wheels could lock up during a sudden braking or braking on slippery road surfaces.

**If either of the following conditions occurs, this indicates a malfunction somewhere in the components monitored by the warning light system. Contact your Toyota dealer as soon as possible to service the vehicle.**

- The light does not come on when the ignition switch is set at ON, or remains on.
- The light comes on while you are driving.

A warning light turning on briefly during operation does not indicate a problem.

**⚠ CAUTION**

**If the "ABS" warning light remains on together with the brake system warning light, immediately stop your vehicle at a safe place and contact your Toyota dealer.**

**In this case, not only the anti–lock brake system will fail but also the vehicle will become extremely unstable during braking.**

**Vehicles with the vehicle stability control system—**

The light comes on when the ignition switch is set at ON. If the anti–lock brake system and the brake assist system work properly, the light turns off after a few seconds. Thereafter, if either of the systems malfunctions, the light comes on again.

When the "ABS" warning light is on (and the brake system warning light is off), the anti–lock brake system and the brake assist system do not operate, but the brake system still operates conventionally.

When the "ABS" warning light is on (and the brake system warning light is off), the anti–lock brake system does not operate so that the wheels could lock up during a sudden braking or braking on slippery road surfaces.

**If either of the following conditions occurs, this indicates a malfunction somewhere in the components monitored by the warning light system. Contact your Toyota dealer as soon as possible to service the vehicle.**

- The light does not come on when the ignition switch is set at ON, or remains on.
- The light comes on while you are driving.

A warning light turning on briefly during operation does not indicate a problem.

**⚠ CAUTION**

**If the "ABS" warning light remains on together with the brake system warning light, immediately stop your vehicle at a safe place and contact your Toyota dealer.**

**In this case, not only the anti–lock brake system will fail but also the vehicle will become extremely unstable during braking.**

**DRUM–IN–DISC TYPE PARKING BRAKE SYSTEM**

Your vehicle has a drum–in–disc type parking brake system. This type of brake system needs bedding–down of the brake shoes periodically or whenever the parking brake shoes and/or drums are replaced.

Have your Toyota dealer perform the bedding–down.

**BRAKE ASSIST SYSTEM (vehicles with vehicle stability control system)**

**When you slam the brakes on, the brake assist system judges as an emergency stop and provides more powerful braking for a driver who cannot hold down the brake pedal firmly.**

When you slam the brakes on, more powerful braking will be applied. At this time, you may hear a sound in the engine compartment and feel the vibration of the brake pedal. This does not indicate a malfunction.

The brake assist system becomes operative after the vehicle has accelerated to a speed in excess of approximately 10 km/h (6 mph). It stops operating when the vehicle decelerates to a speed below approximately 5 km/h (3 mph).

For an explanation of this system's warning light, see "Service reminder indicators and warning buzzers" on page 145 in Section 1–6.

## Brake pad wear limit indicators

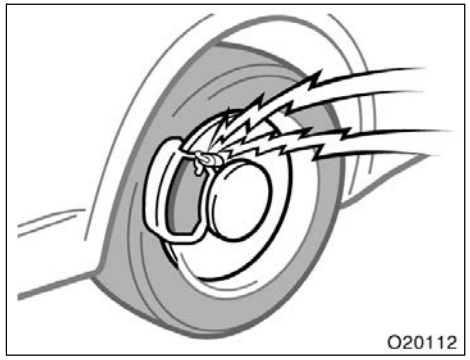


**The brake pad wear limit indicators on your disc brakes give a warning noise when the brake pads are worn to where replacement is required.**

If you hear a squealing or scraping noise while driving, have the brake pads checked and replaced by your Toyota dealer as soon as possible. Expensive rotor damage can result if the pads are not replaced when necessary.

## Your Toyota's identification——Vehicle identification number

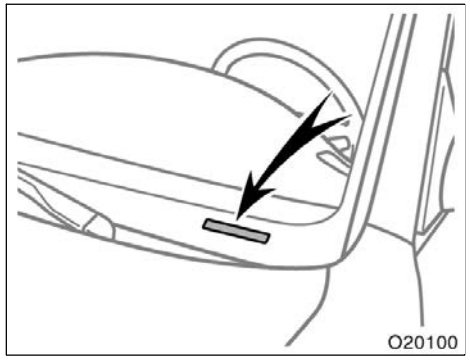


**The vehicle identification number (VIN) is the legal identifier for your vehicle. This number is on the left top of the instrument panel, and can be seen through the windshield from outside.**

This is the primary identification number for your Toyota. It is used in registering the ownership of your vehicle.

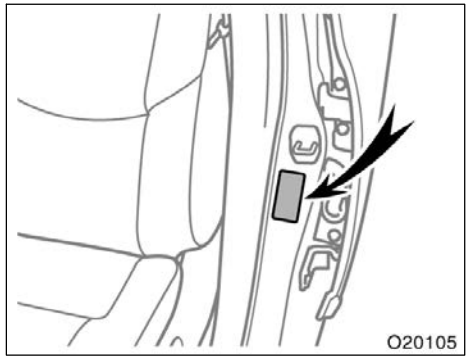


The vehicle identification number (VIN) is also on the Certification Label.

## —Engine number

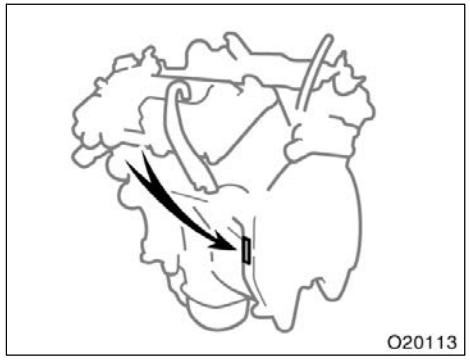


**The engine number is stamped on the engine block as shown.**

## Theft prevention labels (except for Canada)

**Your new vehicle carries theft prevention labels which are approximately 47 mm (1.85 in.) by 12 mm (0.47 in.).**

The purpose of these labels is to reduce the incidence of vehicle thefts by facilitating the tracing and recovery of parts from stolen vehicles. The label is designed so that once it is applied to a surface, any attempt to remove it will result in destroying the integrity of the label. Transferring these labels intact from one part to another, will be impossible.

***NOTICE***

***You should not attempt to remove the theft prevention labels as it may violate certain state or federal laws.***

## Suspension and chassis

**CAUTION**

**Do not modify the suspension/chassis with lift kits, spacers, springs, etc. It can cause dangerous handling characteristics, resulting in loss of control.**

**Tire information—**
**—Tire symbols (standard tire)**

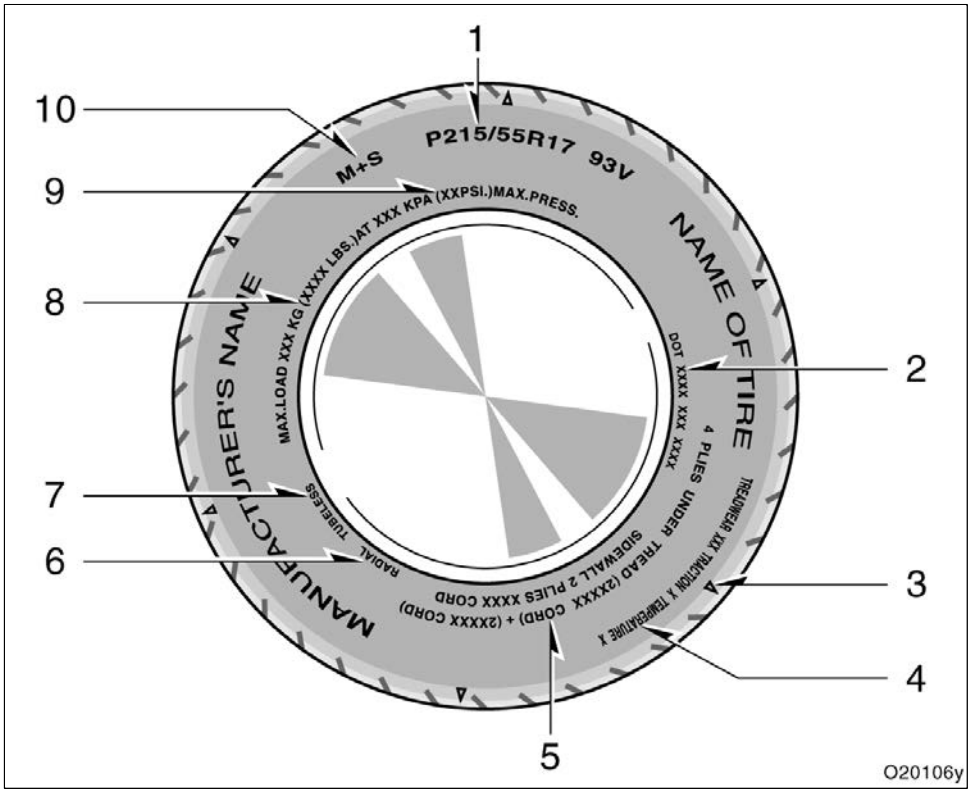


This illustration indicates typical tire symbols.

1. **Tire size—**For details, see "—Tire size" on page 283.
2. **DOT and Tire Identification Number (TIN)—**For details, see "—DOT and Tire Identification Number (TIN)" on page 282.
3. **Location of the tread wear indicators—**For details, see "Checking and replacing tires" on page 363.
4. **Uniform tire quality grading—**For details, see "—Uniform tire quality grading" on page 284.
5. **Tire ply composition and materials—**Plies mean a layer of rubber–coated parallel cords. Cords mean the strands forming the plies in the tire.
6. **Radial tires or bias–ply tires—**A radial tire has "RADIAL" on the sidewall. A tire not marked with "RADIAL" is a bias–ply tire.

7. **“TUBELESS” or “TUBE TYPE”—**A tubeless tire does not have a tube inside the tire and air is directly filled in the tire. A tube type tire has a tube inside the tire and the tube maintains the air pressure.
8. **Load limit at maximum cold tire inflation pressure—**For details, see “Vehicle load limits” on page 289 and “Tires” on page 386.
9. **Maximum cold tire inflation pressure—**This means the pressure to which a tire may be inflated. For details about recommended cold tire inflation pressure, see “Tires” on page 386.
10. **Summer tire or all season tire—**An all season tire has “M+S” on the sidewall. The tire not marked with “M+S” is a summer tire. For details, see “Types of tires” on page 292.

**—Tire symbols (compact spare tire)**

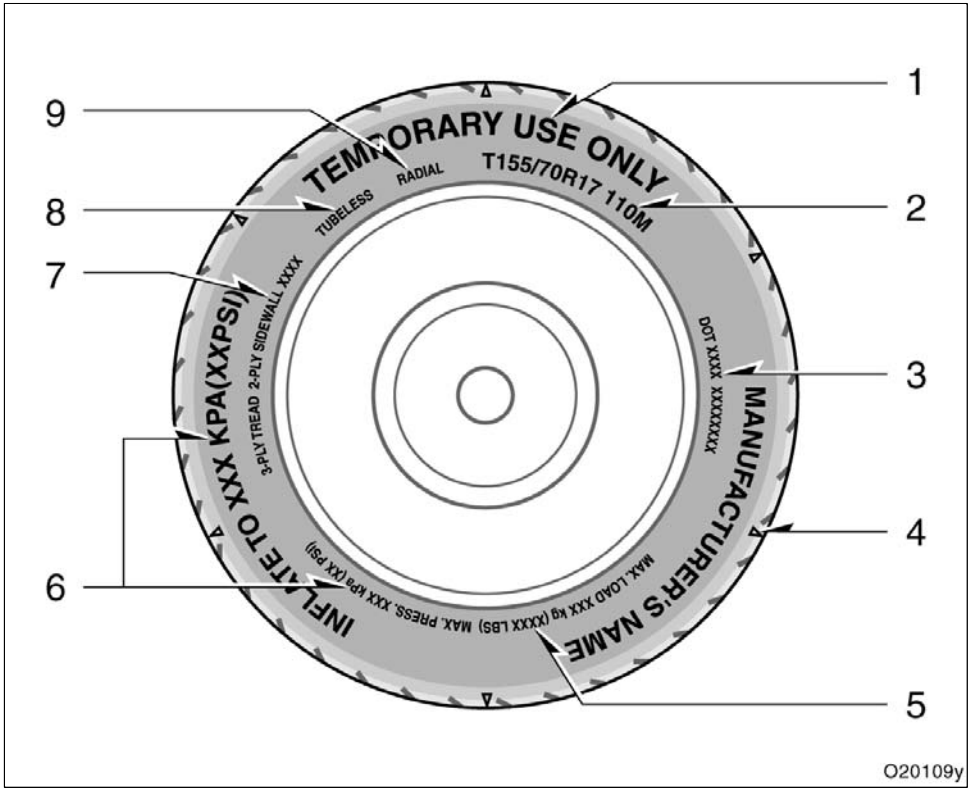


This illustration indicates typical tire symbols.

1. **"TEMPORARY USE ONLY"—**A compact spare tire is identified by the phrase "TEMPORARY USE ONLY" molded into its sidewall. This tire is designed for temporary emergency use only. For details, see "Compact spare tire" on page 321.
2. **Tire size—**For details, see "—Tire size" on page 283.
3. **DOT and Tire Identification Number (TIN)—**For details, see "—DOT and Tire Identification Number (TIN)" on page 282.
4. **Location of the tread wear indicators—**For details, see "Checking and replacing tires" on page 363.
5. **Load limit at maximum cold tire inflation pressure—**For details, see "Vehicle load limits" on page 289 and "Tires" on page 386.

6. **Maximum cold tire inflation pressure—**This means the pressure to which a tire may be inflated. For details about recommended cold tire inflation pressure, see “Tires” on page 386.
7. **Tire ply composition and materials—**Plies mean a layer of rubber–coated parallel cords. Cords mean the strands forming the plies in the tire.
8. **“TUBELESS” or “TUBE TYPE”—**A tubeless tire does not have a tube inside the tire and air is directly filled in the tire. A tube type tire has a tube inside the tire and the tube maintains the air pressure.
9. **Radial tires or bias–ply tires—**A radial tire has “RADIAL” on the sidewall. A tire not marked with “RADIAL” is a bias–ply tire.

**—DOT and Tire Identification Number (TIN)**

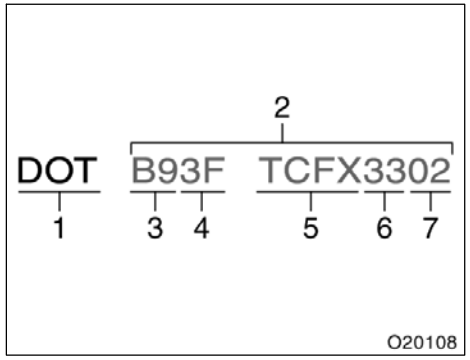


This illustration indicates typical DOT and Tire Identification Number (TIN).

1. “DOT” symbol
2. Tire Identification Number (TIN)
3. Tire manufacturer’s identification mark
4. Tire size code
5. Manufacturer’s optional tire type code (3 or 4 letters)
6. Manufacturing week
7. Manufacturing year

The “DOT” symbol certifies that the tire conforms to applicable Federal Motor Vehicle Safety Standards.

**—Tire size**

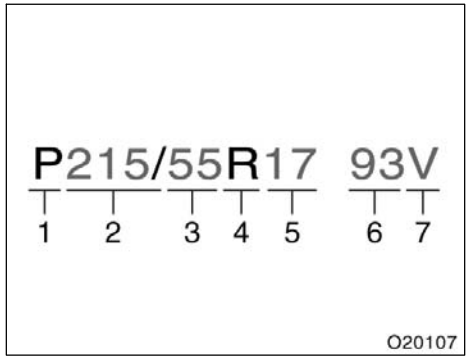


This illustration indicates typical tire size.

1. Tire use (P=Passenger car, T=Temporary use)
2. Section width (in millimeters)
3. Aspect ratio (tire height to section width)
4. Tire construction code (R=Radial, D=Diagonal)
5. Wheel diameter (in inches)
6. Load index (2 digits or 3 digits)
7. Speed symbol (alphabet with one letter)

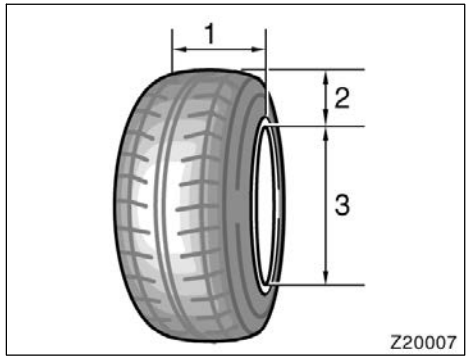


1. Section width
2. Tire height
3. Wheel diameter

**—Name of each section of tire**

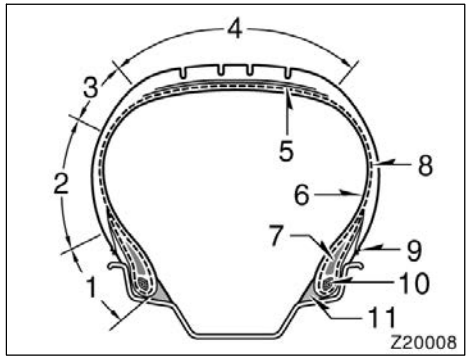


1. Bead
2. Sidewall
3. Shoulder
4. Tread
5. Belt
6. Inner liner
7. Reinforcing rubber
8. Carcass
9. Rim lines
10. Bead wires
11. Chafer

## —Uniform tire quality grading

This information has been prepared in accordance with regulations issued by the National Highway Traffic Safety Administration of the U.S. Department of Transportation. It provides the purchasers and/or prospective purchasers of Toyota vehicles with information on uniform tire quality grading.

Your Toyota dealer will help answer any questions you may have as you read this information.

**DOT quality grades—All passenger vehicle tires must conform to Federal Safety Requirements in addition to these grades. Quality grades can be found where applicable on the tire sidewall between tread shoulder and maximum section width. For example: Treadwear 200 Traction AA Temperature A**

**Treadwear—**The treadwear grade is a comparative rating based on the wear rate of the tire when tested under controlled conditions on a specified government test course. For example, a tire graded 150 would wear one and a half (1–1/2) times as well on the government course as a tire graded 100. The relative performance of tires depends upon the actual conditions of their use, however, and may depart significantly from the norm due to variations in driving habits, service practices and differences in road characteristics and climate.

**Traction AA, A, B, C—**The traction grades, from highest to lowest, are AA, A, B, and C, and they represent the tire's ability to stop on wet pavement as measured under controlled conditions on specified government test surfaces of asphalt and concrete. A tire marked C may have poor traction performance.

Warning: The traction grade assigned to this tire is based on braking (straight ahead) traction tests and does not include cornering (turning) traction.

**Temperature A, B, C—**The temperature grades are A (the highest), B, and C, representing the tire's resistance to the generation of heat and its ability to dissipate heat when tested under controlled conditions on a specified indoor laboratory test wheel. Sustained high temperature can cause the material of the tire to degenerate and reduce tire life, and excessive temperature can lead to sudden tire failure. The grade C corresponds to a level of performance which all passenger car tires must meet under the Federal Motor Vehicle Safety Standard No.109. Grades B and A represent higher levels of performance on the laboratory test wheel than the minimum required by law.

Warning: The temperature grades for this tire are established for a tire that is properly inflated and not overloaded. Excessive speed, underinflation, or excessive loading, either separately or in combination, can cause heat buildup and possible tire failure.

**—Glossary of tire terminology**

| Tire related term | Meaning |
|---|---|
| Accessory weight | the combined weight (in excess of those standard items which may be replaced) of automatic transmission, power steering, power brakes, power windows, power seats, radio, and heater, to the extent that these items are available as factory–installed equipment (whether installed or not) |
| Cold tire inflation pressure | tire inflation pressure when the vehicle has been parked for at least 3 hours or more, or it has not been driven more than 1.5 km or 1 mile under that condition |
| Curb weight | the weight of a motor vehicle with standard equipment including the maximum capacity of fuel, oil, and coolant, and, if so equipped, air conditioning and additional weight optional engine |
| Intended outboard sidewall | (A) the sidewall that contains a whitewall, bears white lettering or bears manufacturer, brand, and/or model name molding that is higher or deeper than the same molding on the other sidewall of the tire, or<br>(B) the outward facing sidewall of an asymmetrical tire that has a particular side that must always face outward when mounted on a vehicle |
| Maximum inflation pressure | the maximum cold inflation pressure to which a tire may be inflated and it is shown on the sidewall of the tire |
| Maximum loaded vehicle weight | the sum of—<br>(a) curb weight;<br>(b) accessory weight;<br>(c) vehicle capacity weight; and<br>(d) production options weight |

| Tire related term | Meaning |
|---|---|
| Normal occupant weight | 68 kg (150 lb.) times the number of occupants specified in the second column of Table 1 that follows |
| Occupant distribution | distribution of occupants in a vehicle as specified in the third column of Table 1 that follows |
| Production options weight | the combined weight of those installed regular production options weighing over 2.3 kg (5 lb.) in excess of those standard items which they replace, not previously considered in curb weight or accessory weight, including heavy duty brakes, ride levelers, roof rack, heavy duty battery, and special trim |
| Recommended inflation pressure | cold tire inflation pressure recommended by a manufacturer |
| Rim | a metal support for a tire or a tire and tube assembly upon which the tire beads are seated |
| Rim diameter (Wheel diameter) | nominal diameter of the bead seat |
| Rim size designation | rim diameter and width |
| Rim type designation | the industry of manufacturer's designation for a rim by style or code |
| Rim width | nominal distance between rim flanges |
| Vehicle capacity weight (Total load capacity) | the rated cargo and luggage load plus 68 kg (150 lb.) times the vehicle's designated seating capacity |
| Vehicle maximum load on the tire | the load on an individual tire that is determined by distributing to each axle its share of the maximum loaded vehicle weight and dividing by two |

| Tire related term | Meaning |
|---|---|
| Vehicle normal load on the tire | the load on an individual tire that is determined by distributing to each axle its share of the curb weight, accessory weight, and normal occupant weight (distributed in accordance with Table 1 that follows) and dividing by two |
| Weather side | the surface area of the rim not covered by the inflated tire |

**Table 1—Occupant loading and distribution for vehicle normal load for various designated seating capacities**

| Designated seating capacity, number of occupants | Vehicle normal load, number of occupants | Occupant distribution in a normally loaded vehicle |
|---|---|---|
| 2 through 4 | 2 | 2 in front |
| 5 through 10 | 3 | 2 in front, 1 in second seat |

## Vehicle load limits

Vehicle load limits include total load capacity, seating capacity, towing capacity and cargo capacity. Follow the load limits shown below. Total load capacity and seating capacity are also described on the tire and loading information label. For location of the tire and loading information label, see “Checking tire inflation pressure” on page 361.

**Total load capacity:**

395 kg (870 lb.)

Total load capacity means combined weight of occupants, cargo and luggage. Tongue load is included when trailer towing.

**Seating capacity:**

Total 5 (Front 2, Rear 3)

Seating capacity means the maximum number of occupants whose estimated average weight is 68 kg (150 lb.) per person. Depending on the weight of each person, the seating capacity given may exceed the total load capacity.

***NOTICE***

***Even if the number of occupants are within the seating capacity, do not exceed the total load capacity.***

**Towing capacity:**

454 kg (1000 lb.)

Towing capacity means the maximum gross trailer weight (trailer weight plus its cargo weight) that your vehicle is able to tow.

### Cargo capacity

Cargo capacity may increase or decrease depending on the size (weight) and the number of occupants. For details, see “—Capacity and distribution” that follows.

**⚠ CAUTION**

**Do not apply the load more than each load limit. That may cause not only damage to the tires, but also deterioration to the steering ability and braking ability, which may cause an accident.**

## Cargo and luggage—
## —Stowage precautions

When stowing cargo and luggage in the vehicle, observe the following:

- Put cargo and luggage in the trunk when at all possible. Be sure all items are secured in place.
- Be careful to keep the vehicle balanced. Locating the weight as far forward as possible helps maintain balance.
- For better fuel economy, do not carry unneeded weight.

**⚠ CAUTION**

- **Do not place anything on the package tray behind the rear seatback. Such items may be thrown about and possibly injure people in the vehicle during sudden braking or an accident.**

- **Do not drive with objects left on top of the instrument panel. They may interfere with the driver's field of view. Or they may move during sharp vehicle acceleration or turning, and impair the driver's control of the vehicle. In an accident they may injure the vehicle occupants.**

## —Capacity and distribution

**Cargo capacity depends on the total weight of the occupants.**

(Cargo capacity) = (Total load capacity) – (Total weight of occupants)

**Steps for Determining Correct Load Limit—**

(1) Locate the statement "The combined weight of occupants and cargo should never exceed XXX kg or XXX lbs." on your vehicle's placard.

(2) Determine the combined weight of the driver and passengers that will be riding in your vehicle.

(3) Subtract the combined weight of the driver and passengers from XXX kg or XXX lbs.

(4) The resulting figure equals the available amount of cargo and luggage load capacity. For example, if the “XXX” amount equals 1400 lbs. and there will be five 150 lb passengers in your vehicle, the amount of available cargo and luggage load capacity is 650 lbs. (1400–750 (5x150)=650 lbs.)

(5) Determine the combined weight of luggage and cargo being loaded on the vehicle. That weight may not safely exceed the available cargo and luggage load capacity calculated in Step 4.

(6) If your vehicle will be towing a trailer, load from your trailer will be transferred to your vehicle. Consult this manual to determine how this reduces the available cargo and luggage load capacity of your vehicle.

For details about trailer towing, see page 306.

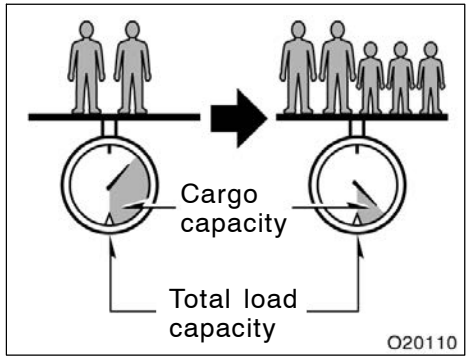


**Example on Your Vehicle**

In case that 2 people with the combined weight of 166 kg (366 lb.) are riding in your vehicle with the total load capacity of 395 kg (870 lb.), the available amount of cargo and luggage load capacity will be as follows:

395 kg – 166 kg = 229 kg
(870 lb. – 366 lb. = 504 lb.)

From this condition, if 3 more passengers with the combined weight of 176 kg (388 lb.) get on, the available cargo and luggage load will be reduced as follows:

229 kg – 176 kg = 53 kg
(504 lb. – 388 lb. = 116 lb.)

As shown in the above example, if the number of occupants increases, the cargo and luggage load equaling the combined weight of occupants who got on later must be reduced. In other words, if the increase in the number of occupants causes the excess of the total load capacity (combined weight of occupants plus cargo and luggage load), you have to reduce the cargo and luggage on your vehicle.

For details about total load capacity, see “Vehicle load limits” on page 289.

**⚠ CAUTION**

**Even if the total load of occupant’s weight and the cargo load is less than the total load capacity, do not apply the load unevenly. That may cause not only damage to the tire but also deterioration to the steering ability due to unbalance of the vehicle, causing an accident.**

## Types of tires

**Determine what kind of tires your vehicle is originally equipped with.**

### 1. Summer tires

Summer tires are high–speed capability tires best suited to highway driving under dry conditions.

Since summer tires do not have the same traction performance as snow tires, summer tires are inadequate for driving on snow–covered or icy roads. For driving on snow–covered or icy roads, we recommend using snow tires. If installing snow tires, be sure to replace all four tires.

### 2. All season tires

All season tires are designed to provide better traction in snow and to be adequate for driving in most winter conditions, as well as for use all year round.

All season tires, however, do not have adequate traction performance compared with snow tires in heavy or loose snow. Also, all season tires fall short in acceleration and handling performance compared with summer tires in highway driving.

The details about how to distinguish summer tires from all season tires are described on page 279 in this Section.

**⚠ CAUTION**

- **Do not mix summer and all season tires on your vehicle as this can cause dangerous handling characteristics, resulting in loss of control.**
- **Do not use tires other than the manufacturer's designated tires, and never mix tires or wheels of the sizes different from the originals.**

# SECTION 3

## STARTING AND DRIVING

### Starting and driving


Before starting the engine . . . . . 296
How to start the engine . . . . . 296
Driving and parking using smart key system . . . . . 300
Tips for driving in various conditions . . . . . 303
Winter driving tips . . . . . 304
Dinghy towing . . . . . 305
Trailer towing . . . . . 306
How to save fuel and make your vehicle last longer . . . . . 311

## Before starting the engine

1. Check the area around the vehicle before entering it.
2. Adjust seat position, seatback angle, seat cushion angle, seat cushion length, head restraint height, steering wheel angle and length.
3. Adjust the inside and outside rear view mirrors.
4. Lock all the doors.
5. Fasten seat belts.

## How to start the engine——Cranking hold function

**With smart key system only—**

Once you press “ENGINE START STOP” switch (engine switch) and release it, the cranking hold function continues to crank the engine until it starts.

The function stops cranking the engine after about 25 seconds maximum if the engine has not started yet. When you crank the engine again, wait a few seconds and restart it.

If you press and hold the “ENGINE START STOP” switch, the function will keep cranking for about 30 seconds maximum.

## (a) Before cranking

1. Apply the parking brake firmly.
2. Turn off unnecessary lights and accessories.
3. Put the selector lever in “P”. If you need to restart the engine while the vehicle is moving, put the selector lever in “N”. A starter safety device will prevent the starter from operating if the selector lever is in any drive position.
4. Depress the brake pedal and hold it to the floor until driving off.

## (b) Starting the engine (with key cylinder–type ignition switch)

Before starting the engine, be sure to follow the instructions in “(a) Before cranking”.

**Normal starting procedure**

The multiport fuel injection system/sequential multiport fuel injection system in your engine automatically controls the proper air–fuel mixture for starting. You can start a cold or hot engine as follows:

With your foot off the accelerator pedal, crank the engine by turning the key to “START” position. Release it when the engine starts.

Engine should be warmed up by driving, not in idle. For warming up, drive with smoothly turning engine until engine coolant temperature is within normal range.

**If the engine stalls...**

Simply restart it, using the correct procedure given in normal starting.

**If the engine will not start...**

See “If your vehicle will not start” on page 314 in Section 4.

**NOTICE**

- ***Do not crank for more than 30 seconds at a time. This may overheat the starter and wiring systems.***
- ***Do not race a cold engine.***
- ***If the engine becomes difficult to start or stalls frequently, have the engine checked immediately.***

## (b) Starting the engine (with smart key system)

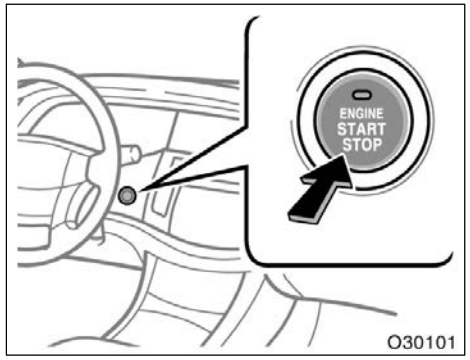


**PUSH BUTTON START FUNCTION**

The engine can be started by pressing the “ENGINE START STOP” switch.

Before starting the engine, be sure to follow the instructions in “(a) Before cranking”.

**Normal starting procedure**

The multiport fuel injection system/sequential multiport fuel injection system in your engine automatically controls the proper air–fuel mixture for starting. You can start a cold or hot engine as follows:

When the key is in the vehicle (on your person), it is possible to start the engine.

With the brake pedal firmly depressed, the indicator light on the “ENGINE START STOP” switch will turn green. Check that the automatic transmission selector lever is in the “P” position. Pressing the “ENGINE START STOP” switch once starts the engine.

Press the “ENGINE START STOP” switch slowly and firmly.

Engine should be warmed up by driving, not in idle. For warming up, drive with smoothly turning engine until engine coolant temperature is within normal range.

**If the engine stalls...**

Simply restart it, using the correct procedure given in normal starting.

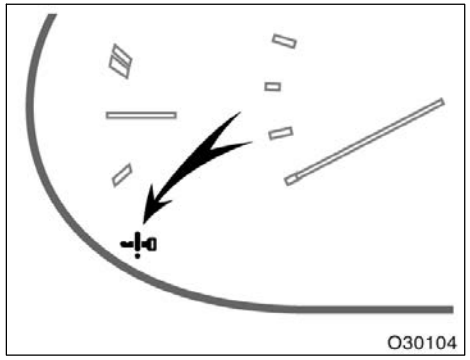


**If the engine will not start...**

In the following cases, the engine will not start.

- If a buzzer sounds from the vehicle and the smart key system warning light comes on when pressing the “ENGINE START STOP” switch, this indicates that the key is not in the vehicle.
- If the key is placed in the trunk.
- There are instances in which the engine will not start, even if the key is in the vehicle (e.g. on the floor, in the cup holder or glove box).

**When the push button start function does not operate properly, the following may be causes:**

- The key battery may be discharged if the electronic key does not work.

  You can start the engine by touching the Toyota logo side of the electronic key to the “ENGINE START STOP” switch. For derails, see “Smart key system” on page 27 in Section 1–2.

  Replace the key battery as soon as possible. (See “—Replacing battery” on page 25 in Section 1–2.)
- The engine was repeatedly turned on and off over a short period.

  Wait 10 seconds and then start the engine.

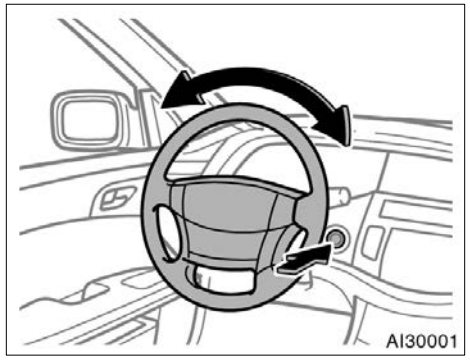


- If the green indicator light on the “ENGINE START STOP” switch flashes and the smart key system warning light on the instrument cluster comes on, the steering wheel is locked.

  To free it, rock the steering wheel slightly while pressing the “ENGINE START STOP” switch.

- If the amber indicator light on the “ENGINE START STOP” switch flashes and the smart key system warning light on the instrument cluster comes on, there is a problem in the push button start function or the steering lock function.

  Contact your Toyota dealer and have your vehicle and all keys inspected.

- In addition to the above, there are instances in which the smart key system does not operate properly because of the circumstances of use. For details, see “Smart key system” on page 27 in Section 1–2.

In cases other than those described above, it is possible that a problem has occurred in an area other than the start system. See “If your vehicle will not start” on page 314 in Section 4.

**When the battery is disconnected or run down,** the push button start function memorizes the current mode. After you reconnect, replace, or recharge the battery, the memorized mode is selected automatically. In any of these cases, turn off the engine if the engine comes on.

Wait 10 seconds to start the engine after the battery has been reconnected. The engine may not start on the first try. This does not indicate a malfunction.

***NOTICE***

- ***Do not race a cold engine.***
- ***If the engine becomes difficult to start or stalls frequently, have the engine checked immediately.***

## Driving and parking using smart key system

### TIPS FOR USING SMART KEY SYSTEM

When using the smart key system, it is possible to start or stop the engine as long as the key is on your person.

For this reason, it is possible that a passenger may remove the key from the vehicle without the driver being aware of the fact. In such a case, it is not possible to restart the engine after having turned it off. In addition, it is possible that one may get out of the vehicle without being aware that the ignition switch has not been turned off completely.

When driving or getting in or out of the vehicle, drivers should make sure that they are carrying the key.

**⚠ CAUTION**

**Do not touch the "ENGINE START STOP" switch (engine switch) while driving.**

If you have to make an emergency stop, press and hold the "ENGINE START STOP" switch for more than 3 seconds.

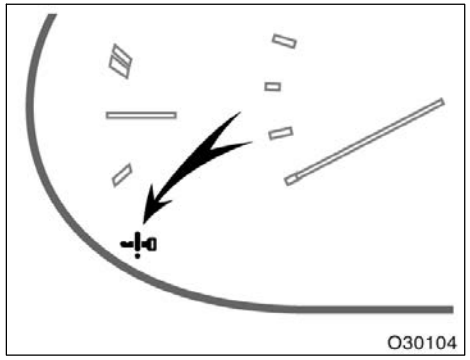


**Smart key system warning light**

### SYSTEM FUNCTION REMINDERS

Follow the instructions described below if any of the following warnings occur:

**(A) A warning buzzer sounds once from the instrument cluster when the ignition switch is turned on**

This indicates that the driver has gotten into the vehicle without the key. The smart key system warning light on the instrument panel will come on.

Operate the ignition switch only after taking care that the key is in the vehicle.

**(B) A warning buzzer beeps repeatedly from the instrument cluster when opening the driver's door**

This indicates that the ignition switch is not set at OFF although the transmission selector lever has been set in the "P" position.

Get out of the vehicle only after turning off the engine by pressing the "ENGINE START STOP" switch and checking that the ignition switch indicator light has gone off.

**(C) A warning buzzer sounds once from the instrument cluster, accompanied by three warning sounds from the vehicle when the driver gets out of the vehicle and closes the door**

This indicates that the driver is attempting to leave the vehicle carrying the key, neglecting to follow the instructions for case (B) above. In addition, the smart key system warning light on the instrument panel will come on.

Get out of the vehicle only after turning off the engine by pressing the “ENGINE START STOP” switch and checking that the ignition switch indicator light has gone off. If the driver returns to the vehicle without carrying the key and begins driving, a warning buzzer will sound once more.

**(D) A warning buzzer sounds from the vehicle for 2 seconds after locking the door with the door handle switch**

This indicates that the driver is attempting to lock the doors while carrying the key, neglecting to follow the instructions for cases (B) and (C) above.

Lock the doors only after turning off the engine by pressing the “ENGINE START STOP” switch and checking that the ignition switch indicator light has gone off.

A warning buzzer that sounds even though the engine has been turned off indicates that you are attempting to lock the vehicle with the keys still in the vehicle.

Leave the vehicle only after making sure that you are carrying the key.

**(E) A warning buzzer sounds continuously from the instrument cluster when opening the driver’s door**

This indicates that the transmission selector lever is in a position other than “P” and that the ignition switch is not set at OFF.

Get out of the vehicle only after setting the transmission selector lever in the “P” position, turning off the engine by pressing the “ENGINE START STOP” switch and checking that the ignition switch indicator light has gone off.

**(F) A warning buzzer sounds continuously from the instrument cluster and from the vehicle when closing the door after getting out of the vehicle**

This indicates that the driver is attempting to leave the vehicle carrying the key, neglecting to follow the instructions for case (E) above. The smart key system warning light on the instrument panel will come on.

Get out of the vehicle only after setting the transmission selector lever in the “P” position, turning off the engine by pressing the “ENGINE START STOP” switch and checking that the ignition switch indicator light has gone off.

**(G) A warning buzzer sounds once from the instrument cluster and three times from the vehicle when a passenger is getting out of the vehicle**

This indicates that the passenger is attempting to leave the vehicle carrying the key, without the ignition switch is not set at OFF. The smart key system warning light on the instrument panel will also come on.

When passengers get out of the vehicle, care should be taken to leave the key with the driver. If the driver begins driving after a passenger gets out of the vehicle carrying the key, a warning buzzer will sound once more.

**(H) A warning buzzer sounds from the vehicle for 2 seconds when locking the vehicle from the outside with the door handle switch**

This indicates that the driver is attempting to lock the door with the key still in the vehicle.

Leave the vehicle only after making sure that you are carrying the key.

**(I) A warning buzzer sounds once from the instrument cluster when turning off the ignition switch**

This indicates that the key battery is low. (This warning buzzer sounds only when the engine has been on or the ignition switch has been set at the ON for 20 minutes or more.)

Change the key battery ahead of time in order to ensure that the smart key system properly.

**(J) A warning buzzer sounds continuously from the instrument cluster when opening the driver’s door with the ignition switch turned off.**

This indicates that the steering wheel is not locked. Turn the engine off and then open the door in order to lock the steering wheel.

**(K) The “ENGINE START STOP” switch flashes green once every second.**

This indicates that the steering lock is stuck. To free it, rock the steering wheel slightly while pressing the “ENGINE START STOP” switch.

**(L) The “ENGINE START STOP” switch flashes amber once every 2 seconds.**

This indicates a problem with the push button start function or the steering lock function. Have your vehicle checked at a Toyota dealer.

**THEFT PREVENTION FUNCTION**

- When the engine is turned off, the engine immobilizer system is automatically set. (See “Engine immobilizer system” on page 16 in Section 1–2.)
- When the driver’s door is opened after turning off the engine, the steering wheel will lock.

  When the vehicle’s battery is discharged, the steering lock function may not operate properly.

## Tips for driving in various conditions

- Always slow down in gusty crosswinds. This will allow you much better control.
- Drive slowly onto curbs and, if possible, at a right angle. Avoid driving onto high, sharp–edged objects and other road hazards. Failure to do so can lead to severe tire damage such as a tire burst.

  Drive slowly when passing over bumps or travelling on a bumpy road. Otherwise, the impact could cause severe damage to the tires and/or wheels.
- When parking on a hill, turn the front wheels until they touch the curb so that the vehicle will not roll. Apply the parking brake, and place the transmission in “P”. If necessary, block the wheels.
- Washing your vehicle or driving through deep water may get the brakes wet. To see whether they are wet, check that there is no traffic near you, and then press the pedal lightly. If you do not feel a normal braking force, the brakes are probably wet. To dry them, drive the vehicle cautiously while lightly pressing the brake pedal with the parking brake applied. If they still do not work safely, pull to the side of the road and call a Toyota dealer for assistance.

**CAUTION**

- **Before driving off, make sure the parking brake is fully released and the parking brake reminder light is off.**
- **Do not leave your vehicle unattended while the engine is running.**
- **Do not rest your foot on the brake pedal while driving. It can cause dangerous overheating, needless wear, and poor fuel economy.**
- **To drive down a long or steep hill, reduce your speed and downshift. Remember, if you ride the brakes excessively, they may overheat and not work properly.**
- **Be careful when accelerating, upshifting, downshifting or braking on a slippery surface. Sudden acceleration or engine braking, could cause the vehicle to skid or spin.**

- **Do not drive in excess of the speed limit. Even if the legal speed limit permits it, do not drive over 140 km/h (85 mph) unless your vehicle has high–speed capability tires. Driving over 140 km/h (85 mph) may result in tire failure, loss of control and possible injury. Be sure to consult a tire dealer to determine whether the tires on your vehicle are high–speed capability tires or not before driving at such speeds.**
- **Do not continue normal driving when the brakes are wet. If they are wet, your vehicle will require a longer stopping distance, and it may pull to one side when the brakes are applied. Also, the parking brake will not hold the vehicle securely.**

## Winter driving tips

**Make sure you have a proper freeze protection for engine coolant.**

Only use “Toyota Super Long Life Coolant” or similar high quality ethylene glycol based non–silicate, non–amine, non–nitrite, and non–borate coolant with long–life hybrid organic acid technology. (Coolant with long–life hybrid organic acid technology is a combination of low phosphates and organic acids.)

See “Checking the engine coolant level” on page 358 in Section 7–2 for details of coolant type selection.

For the U.S.A.—“Toyota Super Long Life Coolant” is a mixture of 50% coolant and 50% deionized water. This coolant provides protection down to about –35°C (–31°F).

For Canada—“Toyota Super Long Life Coolant” is a mixture of 55% coolant and 45% deionized water. This coolant provides protection down to about –42°C (–44°F).

***NOTICE***

***Do not use plain water alone.***

**Check the condition of the battery and cables.**

Cold temperatures reduce the capacity of any battery, so it must be in top shape to provide enough power for winter starting. Section 7–3 tells you how to visually inspect the battery. Your Toyota dealer and most service stations will be pleased to check the level of charge.

**Make sure the engine oil viscosity is suitable for the cold weather.**

See page 357 in Section 7–2 for recommended viscosity. Leaving a heavy summer oil in your vehicle during winter months may cause harder starting. If you are not sure about which oil to use, call your Toyota dealer—they will be pleased to help.

**Keep the door locks from freezing.**

Squirt lock de–icer or glycerine into the locks to keep them from freezing.

**Use a washer fluid containing an antifreeze solution.**

This product is available at your Toyota dealer and most auto parts stores. Follow the manufacturer's directions for how much to mix with water.

***NOTICE***

***Do not use engine antifreeze or any other substitute because it may damage your vehicle's paint.***

**Do not use your parking brake when there is a possibility it could freeze.**

When parking, put the transmission into "P" and block the rear wheels. Do not use the parking brake, or snow or water accumulated in and around the parking brake mechanism may freeze, making it hard to release.

**Keep ice and snow from accumulating under the fenders.**

Ice and snow built up under your fenders can make steering difficult. During bad winter driving, stop and check under the fenders occasionally.

**Depending on where you are driving, we recommend you carry some emergency equipment.**

Some of the things you might put in the vehicle are tire chains, window scraper, bag of sand or salt, flares, small shovel, jumper cables, etc.

## Dinghy towing

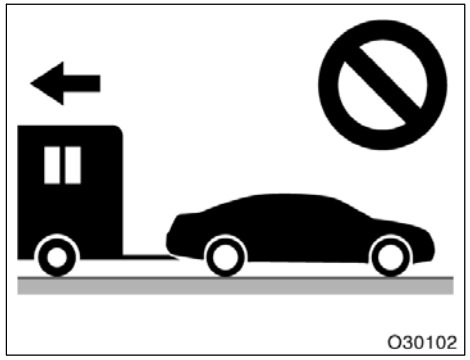


**Your vehicle is not designed to be dinghy towed (with four wheels on the ground) behind a motorhome.**

***NOTICE***

***Do not tow your vehicle with four wheels on the ground. This may cause serious damage to your vehicle.***

## Trailer towing

Your vehicle is designed primarily as a passenger–carrying vehicle. Towing a trailer will have an adverse effect on handling, performance, braking, durability and driving economy (fuel consumption, etc.). Your safety and satisfaction depend on the proper use of correct equipment and cautious driving habits. For your safety and the safety of others, you must not overload your vehicle or trailer. Toyota warranties do not apply to damage or malfunction caused by towing a trailer for commercial purposes. Ask your local Toyota dealer for further details before towing.

***NOTICE***

***When towing a trailer, be sure to consult your Toyota dealer for further information on additional requirements such as a towing kit, etc.***

**WEIGHT LIMITS**

**Before towing, make sure the total trailer weight, gross vehicle weight, gross axle weight and trailer tongue load are all within the limits.**

The total trailer weight and tongue load can be measured with platform scales found at a highway weighing station, building supply company, trucking company, junk yard, etc.

**⚠ CAUTION**

- **The total trailer weight (trailer weight plus its cargo load) must not exceed 454 kg (1000 lb.). Exceeding this weight is dangerous.**

- **Trailer hitch assemblies have different weight capacities established by the hitch manufacturer. Even though the vehicle may be physically capable of towing a higher weight, the operator must determine the maximum weight rating of the particular hitch assembly and never exceed the maximum weight rating specified for the trailer–hitch. Exceeding the maximum weight rating set by the trailer hitch manufacturer can cause an accident resulting in serious personal injuries.**

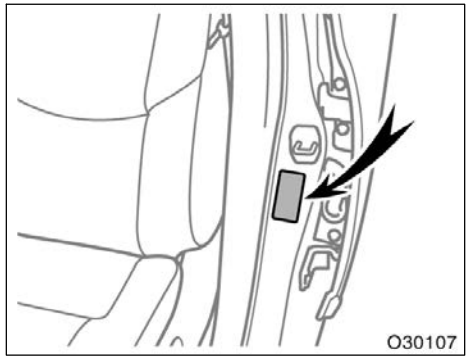


- **The gross vehicle weight must not exceed the Gross Vehicle Weight Rating (GVWR) indicated on the Certification Label. The gross vehicle weight is the sum of weights of the unloaded vehicle, driver, passengers, luggage, hitch and trailer tongue load. It also includes the weight of any special equipment installed on your vehicle.**

- **The load on either the front or rear axle resulting from distribution of the gross vehicle weight on both axles must not exceed the Gross Axle Weight Rating (GAWR) listed on the Certification Label.**

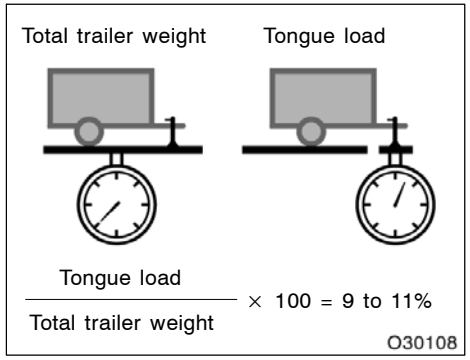


- **The trailer cargo load should be distributed so that the tongue load is 9 to 11% of the total trailer weight, not exceeding the maximum of 45 kg (100 lb.). Never load the trailer with more weight in the back than in the front. About 60% of the trailer load should be in the front half of the trailer and the remaining 40% in the rear.**

## HITCHES

- Use only a hitch which is recommended by the hitch manufacturer and conforms to the total trailer weight requirement.
- Follow the directions supplied by the hitch manufacturer, and bolt the hitch securely to the rear bumper. Lubricate the hitch ball with a light coat of grease.
- Toyota recommends removing the trailer hitch whenever you are not towing a trailer to reduce the possibility of additional damage caused by the hitch if your vehicle is struck from behind. After removing the hitch, seal any mounting holes in the vehicle body to prevent entry of pollutants such as exhaust fumes, dirt, water, etc.

***NOTICE***

***Do not use axle–mounted hitches as they can cause damage to the axle housing, wheel bearings, wheels or tires. Also, never install a hitch which may interfere with the normal function of an Energy Absorbing Bumper.***

## BRAKES AND SAFETY CHAINS

- **Toyota recommends trailers with brakes that conform to any applicable federal and state/provincial regulations.**
- **A safety chain must always be used between the towing vehicle and the trailer. Leave sufficient slack in the chain for turns. The chain should cross under the trailer tongue to prevent the tongue from dropping to the ground in case it becomes damaged or separated. For correct safety chain procedures, follow the hitch or trailer manufacturer's recommendations.**

**⚠ CAUTION**

- **Never tap into your vehicle's hydraulic system as it would lower its braking effectiveness.**

- **Never tow a trailer without using a safety chain securely attached to both the trailer and the vehicle. If damage occurs to the coupling unit or hitch ball, there is danger of the trailer wandering over into another lane.**

## TIRES

- Ensure that your vehicle's tires are properly inflated. See Section 7–2 and Section 8 for instructions.
- The trailer tires should be inflated to the pressure recommended by the trailer manufacturer in respect to the total trailer weight.

## TRAILER LIGHTS

- Trailer lights must comply with federal, state/provincial and local regulations. See your local recreational vehicle dealer or rental agency for the correct type of wiring and relays for your trailer. Check for correct operation of the turn signals and stop lights each time you hitch up. Direct splicing may damage your vehicle's electrical system and cause a malfunction of your lights.

## BREAK–IN SCHEDULE

- Toyota recommends that you do not tow a trailer with a new vehicle or a vehicle with any new power train component (engine, transmission, differential, wheel bearing, etc.) for the first 800 km (500 miles) of driving.

## MAINTENANCE

- If you tow a trailer, your vehicle will require more frequent maintenance due to the additional load. For this information, please refer to the scheduled maintenance information in the “Scheduled Maintenance Guide” or “Owner’s Manual Supplement”.
- Retighten all fixing bolts of the towing ball and bracket after approximately 1000 km (600 miles) of trailer driving.

## PRE–TOWING SAFETY CHECK

- Check that your vehicle remains level when a loaded or unloaded trailer is hitched. Do not drive if the vehicle has an abnormal nose–up or nose–down condition, and check for improper tongue load, overload, worn suspension or other possible causes.
- Make sure the trailer cargo is securely loaded so that it can not shift.
- Check that your rear view mirrors conform to any applicable federal, state/provincial or local regulations. If not, install the rear view mirrors required for towing purpose.

## TRAILER TOWING TIPS

**When towing a trailer, your vehicle will handle differently than when not towing. The three main causes of vehicle–trailer accidents are driver error, excessive speed and improper trailer loading. Keep these in mind when towing:**

- Before starting out, check operation of the lights and all vehicle–trailer connections. After driving a short distance, stop and recheck the lights and connections. Before actually towing a trailer, practice turning, stopping and backing with a trailer in an area away from traffic until you learn the feel.
- Backing with a trailer is difficult and requires practice. Grip the bottom of the steering wheel and move your hand to the left to move the trailer to the left. Move your hand to the right to move the trailer to the right. (This procedure is generally opposite to that when backing without a trailer.) Also, just turn the steering wheel a little at a time, avoiding sharp or prolonged turning. Have someone guide you when backing to reduce the risk of an accident.
- Because stopping distance may be increased, vehicle–to–vehicle distance should be increased when towing a trailer. For each 16 km/h (10 mph) of speed, allow at least one vehicle and trailer length between you and the vehicle ahead. Avoid sudden braking as you may skid, resulting in jackknifing and loss of control. This is especially true on wet or slippery surfaces.
- Avoid jerky starts or sudden acceleration.

- Avoid jerky steering and sharp turns. The trailer could hit your vehicle in a tight turn. Slow down before making a turn to avoid the necessity of sudden braking.
- Remember that when making a turn, the trailer wheels will be closer than the vehicle wheels to the inside of the turn. Therefore, compensate for this by making a larger than normal turning radius with your vehicle.
- Crosswinds and rough roads will adversely affect handling of your vehicle and trailer, causing sway. Pay attention to the rear from time to time to prepare yourself for being passed by large trucks or buses, which may cause your vehicle and trailer to sway. If swaying happens, firmly grip the steering wheel and reduce speed immediately but gradually. Never increase speed. Steer straight ahead. If you make no extreme correction with the steering or brakes, the vehicle and trailer will stabilize.
- Be careful when passing other vehicles. Passing requires considerable distance. After passing a vehicle, do not forget the length of your trailer and be sure you have plenty of room before changing lanes.
- In order to maintain engine braking efficiency do not use overdrive.
- Because of the added load of the trailer, your vehicle's engine may overheat on hot days (at temperatures over 30°C [85°F]) when going up a long or steep grade with a trailer. If the engine coolant temperature gauge indicates overheating, immediately turn off the air conditioning (if in use), pull off the road and stop in a safe spot. Refer to "If your vehicle overheats" in Section 4.
- Always place wheel blocks under both the vehicle and trailer wheels when parking. Apply the parking brake firmly. Put the transmission in "P". Avoid parking on a slope with a trailer, but if it cannot be avoided, do so only after performing the following:

1. Apply the brakes and hold.
2. Have someone place wheel blocks under both the vehicle and trailer wheels.
3. When the wheel blocks are in place, release your brakes slowly until the blocks absorb the load.
4. Apply the parking brake firmly.
5. Shift into "P" and turn off the engine.

When restarting out after parking on a slope:

1. With the transmission in "P" position, start the engine. Be sure to keep the brake pedal depressed.
2. Shift into gear.
3. Release the parking brake and brake pedal and slowly pull or back away from the wheel blocks. Stop and apply your brakes.
4. Have someone retrieve the blocks.

**⚠ CAUTION**

- **Do not exceed 72 km/h (45 mph) or the posted towing speed limit, whichever is lower. Because instability (swaying) of a towing vehicle–trailer combination usually increases as the speed increases, exceeding 72 km/h (45 mph) may cause loss of control.**
- **Slow down and downshift before descending steep or long downhill grades. Do not make sudden downshifts.**
- **Avoid holding the brake pedal down too long or too frequently. This could cause the brakes to overheat and result in reduced braking efficiency.**

## How to save fuel and make your vehicle last longer

Improving fuel economy is easy—just take it easy. It will help make your vehicle last longer, too. Here are some specific tips on how to save money on both fuel and repairs:

- **Keep your tires inflated at the correct pressure.** Underinflation causes tire wear and wastes fuel. See page 361 in Section 7–2 for instructions.
- **Do not carry unneeded weight in your vehicle.** Excess weight puts a heavier load on the engine, causing greater fuel consumption.
- **Avoid lengthy warm–up idling.** Once the engine is running smoothly, begin driving—but gently. Remember, however, that on cold winter days this may take a little longer.
- **Put the selector lever into the "D" when engine braking is not required.** Driving without the "D" position will reduce the fuel economy. (For details, see "Automatic transmission" on page 161 in Section 1–7.)
- **Accelerate slowly and smoothly.** Avoid jackrabbit starts.
- **Avoid long engine idling.** If you have a long wait and you are not in traffic, it is better to turn off the engine and start again later.
- **Avoid engine lugging or over–revving.** Use a gear position suitable for the road on which you are travelling.
- **Avoid continuous speeding up and slowing down.** Stop–and–go driving wastes fuel.
- **Avoid unnecessary stopping and braking.** Maintain a steady pace. Try to time the traffic signals so you only need to stop as little as possible or take advantage of through streets to avoid traffic lights. Keep a proper distance from other vehicles to avoid sudden braking. This will also reduce wear on your brakes.
- **Avoid heavy traffic or traffic jams whenever possible.**
- **Do not rest your foot on the brake pedal.** This causes premature wear, overheating and poor fuel economy.
- **Maintain a moderate speed on highways.** The faster you drive, the greater the fuel consumption. By reducing your speed, you will cut down on fuel consumption.

- **Keep the front wheels in proper alignment.** Avoid hitting the curb and slow down on rough roads. Improper alignment not only causes faster tire wear but also puts an extra load on the engine, which, in turn, wastes fuel.
- **Keep the bottom of your vehicle free from mud, etc.** This not only lessens weight but also helps prevent corrosion.
- **Keep your vehicle tuned–up and in top shape.** A dirty air cleaner, improper valve clearance, dirty plugs, dirty oil and grease, brakes not adjusted, etc. all lower engine performance and contribute to poor fuel economy. For longer life of all parts and lower operating costs, keep all maintenance work on schedule, and if you often drive under severe conditions, see that your vehicle receives more frequent maintenance. (For scheduled maintenance information, please refer to the “Scheduled Maintenance Guide” or “Owner’s Manual Supplement”.)

**⚠ CAUTION**

**Never turn off the engine to coast down hills. Your power steering and brake booster will not function without the engine running. Also, the emission control system operates properly only when the engine is running.**

# SECTION 4

# IN CASE OF AN EMERGENCY

## In case of an emergency


If your vehicle will not start . . . . . 314
If your engine stalls while driving . . . . . 318
If you cannot increase engine speed . . . . . 318
If your vehicle overheats . . . . . 319
If you have a flat tire . . . . . 320
If your vehicle becomes stuck . . . . . 329
If your vehicle needs to be towed . . . . . 330
If you cannot shift automatic transmission selector lever . . . . . 331
If you lose your keys . . . . . 332
If you lose your wireless remote control transmitter . . . . . 332

## If your vehicle will not start—
## (a) Simple checks

Before making these checks, make sure you have followed the correct starting procedure given in “How to start the engine” on page 296 in Section 3 and that you have sufficient fuel. Also, check whether the other keys will start the engine. If they work, your key may be broken. Have the key checked at your Toyota dealer. If none of your keys work, there may be a malfunction in the immobilizer system. Call your Toyota dealer. (See “Keys” on pages 12 or 14 in Section 1–2.)

**If the engine is not turning over or is turning over too slowly—**

1. Check that the battery terminals are tight and clean.
2. If the battery terminals are O.K., switch on the interior light.
3. If the light is out, dim or goes out when the starter is cranked, the battery is discharged. You may try jump starting. See “(c) Jump starting” on page 315 for further instructions.
4. With smart key system—If the engine does not start even after the battery has been recharged or replace, see “(d) Starting the engine after a battery discharge” on page 318 for further instruction.

If the light is O.K., but the engine still will not start, it needs adjustment or repair. Call a Toyota dealer or qualified repair shop.

**NOTICE**

***Do not pull– or push–start the vehicle. Your vehicle may suddenly move when the engine starts, and may damage itself or cause a collision. Also the three–way catalytic converter may overheat and become a fire hazard.***

**If the engine turns over at its normal speed but will not start—**

1. Set the ignition switch to ACC or off and try starting the engine again.
2. If the engine will not start, the engine may be flooded because of repeated cranking. See “(b) Starting a flooded engine” on page 314 for further instructions.
3. If the engine still will not start, it needs adjustment or repair. Call a Toyota dealer or qualified repair shop.

## (b) Starting a flooded engine

**If the engine will not start, your engine may be flooded because of repeated cranking.**

With key cylinder–type ignition switch—If this happens, turn the key to “START” with the accelerator pedal fully depressed. Keep the key and accelerator pedal in these positions for 15 seconds and release them. Then try starting the engine with your foot off the accelerator pedal.

With smart key system—If this happens, press the “ENGINE START STOP” switch (engine switch) with the brake pedal and the accelerator pedal fully depressed, and hold the “ENGINE START STOP” switch for about 30 seconds. Then the cranking hold function stops cranking automatically, and you can try starting the engine with your foot off the accelerator pedal.

If the engine does not start, wait a few minutes and try again.

If the engine still will not start, it needs adjustment or repair. Call a Toyota dealer or qualified repair shop for assistance.

**NOTICE**

***With key cylinder–type ignition switch—Do not crank for more than 30 seconds at a time. This may overheat the starter and wiring systems.***

### (c) Jump starting

**To avoid serious personal injury and damage to your vehicle which might result from battery explosion, acid burns, electrical burns, or damaged electronic components, these instructions must be followed precisely.**

If you are unsure about how to follow this procedure, we strongly recommend that you seek the help of a competent mechanic or towing service.

**⚠ CAUTION**

- **Batteries contain sulfuric acid which is poisonous and corrosive. Wear protective safety glasses when jump starting, and avoid spilling acid on your skin, clothing, or vehicle.**
- **If you should accidentally get acid on yourself or in your eyes, remove any contaminated clothing and flush the affected area with water immediately. Then get immediate medical attention. If possible, continue to apply water with a sponge or cloth while en route to the medical office.**
- **The gas normally produced by a battery will explode if a flame or spark is brought near. Use only standardized jumper cables and do not smoke or light a match while jump starting.**

**NOTICE**

***The battery used for boosting must be 12 V. Do not jump start unless you are sure that the booster battery is correct.***

**JUMP STARTING PROCEDURE**

1. If the booster battery is installed in another vehicle, make sure the vehicles are not touching. Turn off all unnecessary lights and accessories.

   When boosting, use the battery of matching or higher quality. Any other battery may be difficult to jump start with.

   If jump starting is difficult, charge the battery for several minutes.

2. If required, remove all the vent plugs from the booster and discharged batteries. Lay a cloth over the open vents on the batteries. (This helps reduce the explosion hazard, personal injuries and burns.)

3. If the engine in the vehicle with the booster battery is not running, start it and let it run for a few minutes. During jump starting, run the engine at about 2000 rpm with the accelerator pedal lightly depressed.

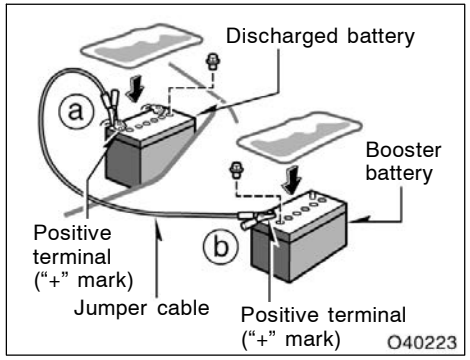


4. Make the cable connections in the order a, b, c, d.

   a. Connect the clamp of the positive (red) jumper cable to the positive (+) terminal on the discharged battery.

   b. Connect the clamp at the other end of the positive (red) jumper cable to the positive (+) terminal on the booster battery.

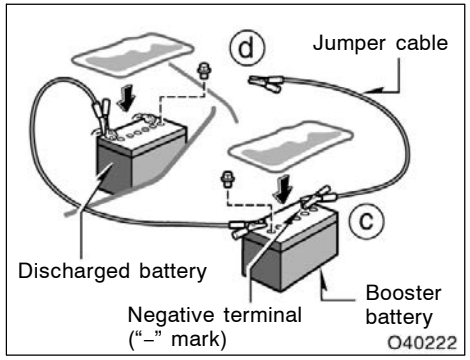


   c. Connect the clamp of the negative (black) jumper cable to the negative (–) terminal on the booster battery.

   d. Connect the clamp at the other end of the negative (black) jumper cable to a solid, stationary, unpainted, metallic point of the vehicle with the discharged battery.

   The recommended connecting point is shown in the following illustration:

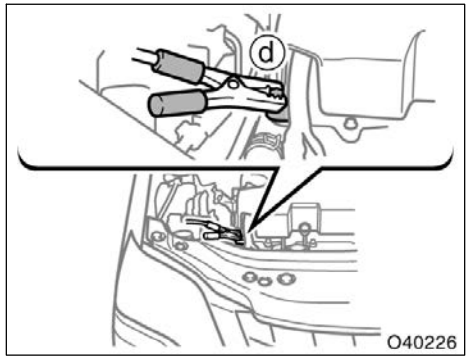


**Connecting point**

Do not connect the cable to or near any part that moves when the engine is cranked.

**CAUTION**

**When making the connections, to avoid serious injury, do not lean over the battery or accidentally let the jumper cables or clamps touch anything except the correct battery terminals or the ground.**

5. With smart key system—Charge the discharged battery with the jumper cables connected for approximately 5 minutes. At this time, run the engine in the vehicle with the booster battery at about 2000 rpm with the accelerator pedal lightly depressed.
6. Start your engine in the normal way. After starting, run it at about 2000 rpm for several minutes with the accelerator pedal lightly depressed.
7. Carefully disconnect the cables in the exact reverse order: the negative cable and then the positive cable.
8. Carefully dispose of the battery cover cloths—they may now contain sulfuric acid.
9. If removed, replace all the battery vent plugs.

With smart key system—The engine may not restart even after battery charging or replacement. If this happens, see “(d) Starting the engine after a battery discharge” described below.

If the cause of your battery discharging is not apparent (for example, lights left on), you should have it checked at your Toyota dealer.

**If the first start attempt is not successful...**

Check that the clamp on the jumper cables are tight. Recharge the discharged battery with the jumper cables connected for several minutes and restart your engine in the normal way.

If the another attempt is not successful, the battery may be depleted. Have it checked at your Toyota dealer.

### (d) Starting the engine after a battery discharge

**With smart key system only—**

**In the event that the battery is discharged, the engine may not restart even after the battery is recharged or replaced. For safety reasons, the engine may be disabled when battery voltage is extremely low. If the engine is disabled, the start system must be normalized.**

To normalize the start system:

1. Shift the transmission to the "P" position and set the ignition switch off.
2. Open and close any of the doors.
3. Start the engine.

### If your engine stalls while driving

If your engine stalls while driving...

1. Reduce your speed gradually, keeping a straight line. Move cautiously off the road to a safe place.
2. Turn on your emergency flashers.
3. Set the ignition switch to ACC or off, and try starting the engine again.

If the engine will not start, see "If your vehicle will not start" on page 314 in this Section.

**CAUTION**

- **If the engine is not running, the power assist for the brakes and steering will not work so steering and braking will be much harder than usual.**
- **Vehicles with smart key system— If the engine stalls while driving, do not open the driver's door until the vehicle comes to a complete stop. Opening the driver's door locks the steering wheel, resulting in loss of steering control.**

### If you cannot increase engine speed

If engine speed does not increase when the accelerator pedal is depressed, there may be a problem somewhere in the electronic throttle control system.

At this time, vibration may occur. However, if you depress the accelerator pedal more firmly and slowly, you can drive your vehicle at low speeds. Have your vehicle checked by your Toyota dealer as soon as possible.

Even if the abnormality of the electronic throttle control system is corrected during low speed driving, the system may not be recovered until the engine is stopped and set the ignition switch to ACC or off.

**CAUTION**

**Be especially careful to prevent erroneous pedal operation.**

## If your vehicle overheats

**If your engine coolant temperature gauge indicates overheating, if you experience a loss of power, or if you hear a loud knocking or pinging noise, the engine has probably overheated. You should follow this procedure...**

1. Pull safely off the road, stop the vehicle and turn on your emergency flashers. Put the transmission in "P" and apply the parking brake. Turn off the air conditioning if it is being used.
2. If coolant or steam is boiling out of the radiator or reservoir, stop the engine. Wait until the steam subsides before opening the hood. If there is no coolant boiling over or steam, leave the engine running and make sure the electric cooling fan is operating. If it is not, turn the ignition off.

**⚠ CAUTION**

**To help avoid personal injury, keep the hood closed until there is no steam. Escaping steam or coolant is a sign of very high pressure.**

3. Look for obvious coolant leaks from the radiator, hoses, and under the vehicle. However, note that water draining from the air conditioning is normal if it has been used.

**⚠ CAUTION**

**When the engine is running, keep hands and clothing away from the moving fan and engine drive belts.**

4. If the coolant is leaking, stop the engine immediately. Call a Toyota dealer for assistance.
5. If there are no obvious leaks, check the coolant reservoir. If it is dry, add coolant to the reservoir while the engine is running. Fill it about half full. For the coolant type, see "Coolant type selection" on page 358 in Section 7–2.

**⚠ CAUTION**

**Do not attempt to remove the radiator cap when the engine and radiator are hot. Serious injury could result from scalding hot fluid and steam blown out under pressure.**

6. After the engine coolant temperature has cooled to normal, again check the coolant level in the reservoir. If necessary, bring it up to half full again. Serious coolant loss indicates a leak in the system. You should have it checked as soon as possible at your Toyota dealer.

**If you have a flat tire—**

1. Reduce your speed gradually, keeping a straight line. Move cautiously off the road to a safe place well away from the traffic. Avoid stopping on the center divider of a highway. Park on a level spot with firm ground.
2. Stop the engine and turn on your emergency flashers.
3. Firmly set the parking brake and put the transmission in “P”.
4. Have everyone get out of the vehicle on the side away from traffic.
5. Read the following instructions thoroughly.

**⚠ CAUTION**

**When jacking, be sure to observe the following to reduce the possibility of death or serious injury:**

- **Follow jacking instructions.**
- **Do not put any part of your body under the vehicle supported by the jack. Otherwise, personal injury may occur.**
- **Do not start or run the engine while your vehicle is supported by the jack.**
- **Stop the vehicle on a level firm ground, firmly set the parking brake and put the transmission in “P”. Block the wheel diagonally opposite to the one being changed if necessary.**
- **Make sure to set the jack properly in the jack point. Raising the vehicle with jack improperly positioned will damage the vehicle or may allow the vehicle to fall off the jack and cause personal injury.**
- **Never get under the vehicle when the vehicle is supported by the jack alone.**
- **Use the jack only for lifting your vehicle during wheel changing.**
- **Do not raise the vehicle with someone in the vehicle.**
- **When raising the vehicle, do not place any objects on top of or underneath the jack.**
- **Raise the vehicle only high enough to remove and change the tire.**

**NOTICE**

***Do not continue driving with a deflated tire. Driving even a short distance can damage a tire and wheel beyond repair.***

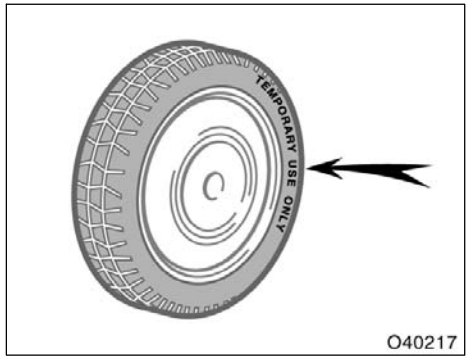


### Compact spare tire

**The compact spare tire is designed for temporary emergency use only.**

The compact spare tire is identified by the distinctive wording "TEMPORARY USE ONLY" molded into the side wall of the tire.

The compact spare tire saves space in your luggage compartment, and its lighter weight helps to improve fuel economy and permits easier installation in case of a flat tire.

The compact spare tire can be used many times, if necessary. It has tread life of up to 4800 km (3000 miles) depending on road conditions and your driving habits. When tread wear indicators appear on the tire, replace the tire.

See also the tire information on page 363 in Section 7–2 for details on the tread wear indicators and other service information.

**⚠ CAUTION**

- **The compact spare tire was designed especially for your Toyota. Do not use it on any other vehicle.**
- **Do not use more than one compact spare tire at the same time.**
- **The pressure for the compact spare tire must be 420 kPa (4.2 kgf/cm$^2$ or bar, 60 psi).**
- **Do not exceed 80 km/h (50 mph) when driving with the compact spare tire.**

- **Replace the compact spare tire with the standard tire as soon as possible.**
- **Avoid sudden acceleration, sudden deceleration and sharp turns with the compact spare tire.**

***NOTICE***

***Your ground clearance is reduced when the compact spare tire is installed so avoid driving over obstacles and drive slowly on rough, unpaved roads and speed bumps. Also, do not attempt to go through an automatic car wash as the vehicle may get caught, resulting in damage.***

**—Required tools and spare tire**

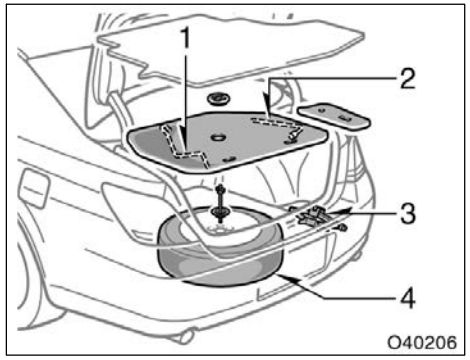


1. **Get the required tools and spare tire.**
   1. Jack handle
   2. Wheel nut wrench
   3. Jack
   4. Spare tire

To prepare yourself for an emergency, you should familiarize yourself with the use of the jack, each of the tools and their storage locations.

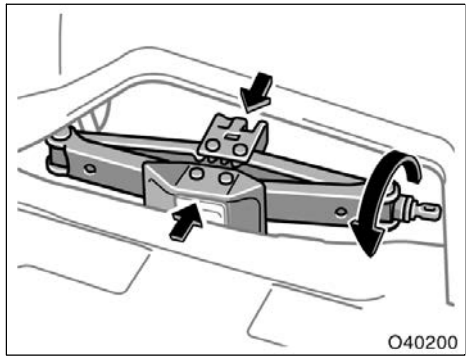


To remove the jack, turn the jack joint by hand until the jack becomes free.

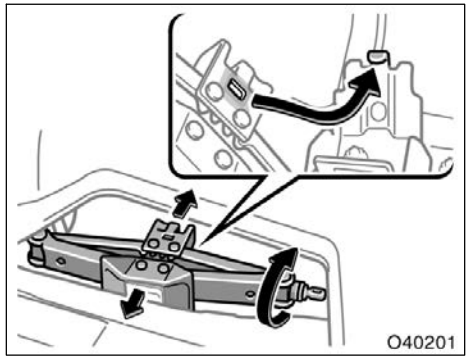


To store the jack, align the hole of the jack head with the vehicle hook. Turn the jack joint until the jack base fits securely with the vehicle body.

This prevents the jack from flying forward during a collision or sudden stop.

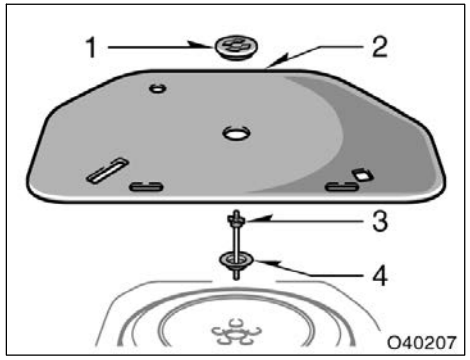


To remove the spare tire:

1. Loosen the nut and remove it.
2. Remove the spare tire cover.
3. Loosen the bolt and remove it.
4. Remove the spacer.

Then take the spare tire out of the vehicle.

When storing the spare tire, put it in place with the outer side of the wheel facing up. Then secure the tire by repeating the above removal steps in reverse order to prevent it from flying forward during a collision or sudden braking.

**—Blocking the wheel**

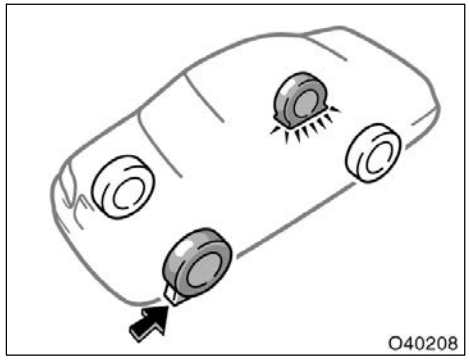


2. **Block the wheel diagonally opposite the flat tire to keep the vehicle from rolling when it is jacked up.**

When blocking the wheel, place a wheel block in front of one of the front wheels or behind one of the rear wheels.

**—Removing wheel ornament (on some models)**

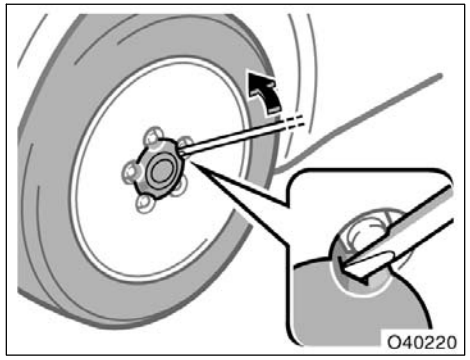


**3. Remove the wheel ornament.**

Pry off the wheel ornament, using the beveled end of the wheel nut wrench as shown.

> **⚠ CAUTION**
>
> **Do not try to pull off the ornament by hand. Take due care in handling the ornament to avoid unexpected personal injury.**

**—Loosening wheel nuts**

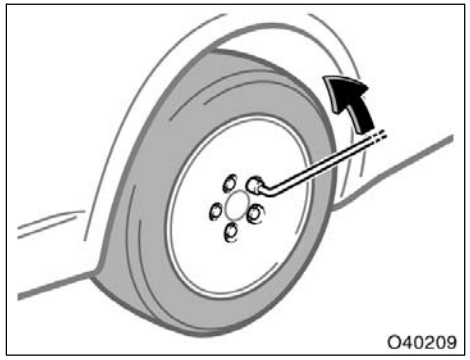


**4. Loosen all the wheel nuts.**

Always loosen the wheel nuts before raising the vehicle.

Turn the wheel nuts counterclockwise to loosen. To get maximum leverage, fit the wrench to the nut so that the handle is on the right side, as shown above. Grab the wrench near the end of the handle and pull up on the handle. Be careful that the wrench does not slip off the nut.

Do not remove the nuts yet—just unscrew them about one–half turn.

> **⚠ CAUTION**
>
> **Never use oil or grease on the bolts or nuts. The nuts may loose and the wheels may fall off, which could cause a serious accident.**

**—Positioning the jack**

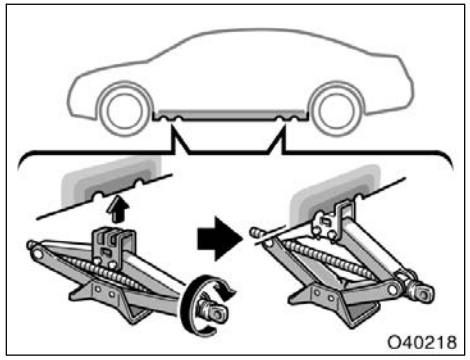


**5. Position the jack at the correct jack point as shown.**

Make sure the jack is positioned on a level and solid place.

**—Raising your vehicle**

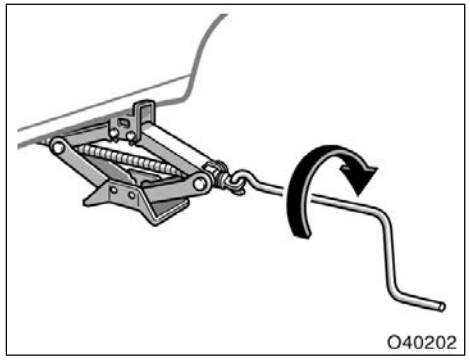


**6. After making sure that no one is in the vehicle, raise it high enough so that the spare tire can be installed.**

Remember you will need more ground clearance when putting on the spare tire than when removing the flat tire.

To raise the vehicle, insert the jack handle into the jack (it is a loose fit) and turn it clockwise. As the jack touches the vehicle and begins to lift, double–check that it is properly positioned.

**⚠ CAUTION**

**Never get under the vehicle when the vehicle is supported by the jack alone.**

## —Changing wheels

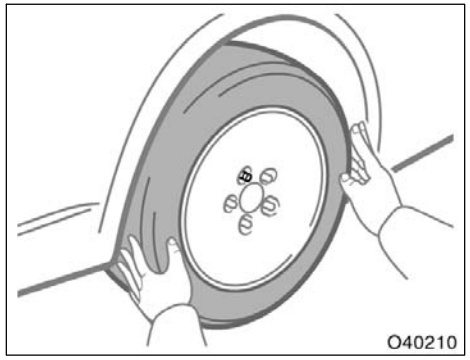


**7. Remove the wheel nuts and change tires.**

Lift the flat tire straight off and put it aside.

Roll the spare wheel into position and align the holes in the wheel with the bolts. Then lift up the wheel and get at least the top bolt started through its hole. Wiggle the tire and press it back over the other bolts.

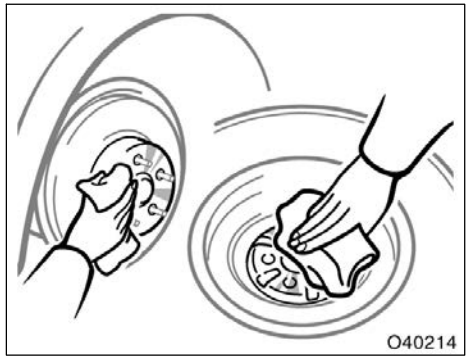


Before putting on wheels, remove any corrosion on the mounting surfaces with a wire brush or such. Installation of wheels without good metal–to–metal contact at the mounting surface can cause wheel nuts to loosen and eventually cause a wheel to come off while driving.

## —Reinstalling wheel nuts

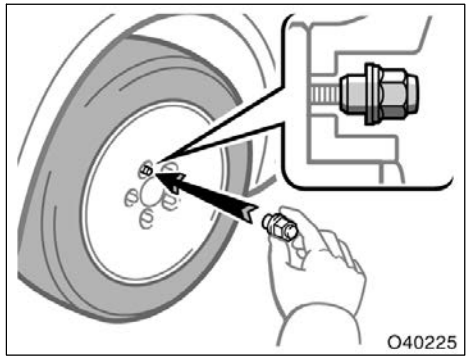


**8. Reinstall all the wheel nuts finger tight.**

Reinstall the wheel nuts (tapered end inward) and tighten them as much as you can by hand. Press back on the tire and see if you can tighten them more.

**⚠ CAUTION**

**Never use oil or grease on the bolts or nuts. Doing so may lead to overtightening the nuts and damaging the bolts. The nuts may loose and the wheels may fall off, which could cause a serious accident. If there is oil or grease on any bolt or nut, clean it.**

**—Lowering your vehicle**

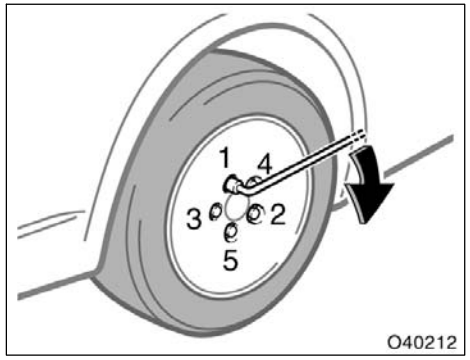


**9. Lower the vehicle completely and tighten the wheel nuts.**

Turn the jack handle counterclockwise to lower the vehicle.

Use only the wheel nut wrench and turn it clockwise to tighten the nuts. Do not use other tools or any additional leverage other than your hands, such as a hammer, pipe or your foot. Make sure the wrench is securely engaged over the nut.

Tighten each nut a little at a time in the order shown. Repeat the process until all the nuts are tight.

**⚠ CAUTION**

- **When lowering the vehicle, make sure all portions of your body and all other persons around will not be injured as the vehicle is lowered to the ground.**
- **Have the wheel nuts tightened with torque wrench to 103 N·m (10.5 kgf·m, 76 ft·lbf), as soon as possible after changing wheels. Otherwise, the nuts may loosen and the wheels may fall off, which could cause a serious accident.**

**—Reinstalling wheel ornament (on some models)**

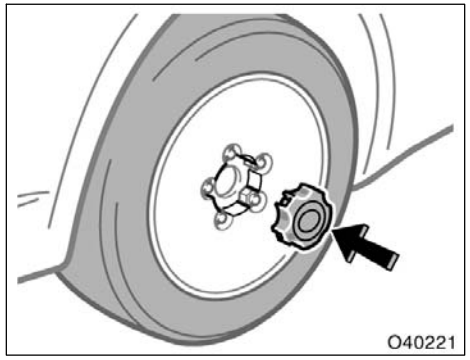


**10. Reinstall the wheel ornament.**

Align the cutout of the wheel ornament with the valve stem as shown. Then press hand firmly on one side of wheel ornament and then firmly tap the other side around the edge of wheel ornament with the heel of your hand to snap into place.

**⚠ CAUTION**

- **Take due care in handling the ornament to avoid unexpected personal injury.**
- **Do not attach a heavily damaged plastic wheel ornament. It may fly off the wheel and cause accidents while the vehicle is moving.**

**—After changing wheels**

**11. Check the air pressure of the replaced tire.**

Adjust the air pressure to the specification designated on page 386 in Section 8. If the pressure is lower, drive slowly to the nearest service station and fill to the correct pressure.

Do not forget to reinstall the tire inflation valve cap as dirt and moisture could get into the valve core and possibly cause air leakage. If the cap is missing, have a new one put on as soon as possible.

**12. Restow all the tools, jack and flat tire securely.**

As soon after changing wheels as possible, tighten the wheel nuts to the torque specified on page 386 in Section 8 with a torque wrench. Have a technician repair the flat tire and replace the spare tire with it.

Initial adjustment of the tire pressure warning system is necessary after you have replaced your tires or wheels. See “Tire pressure warning system” on page 169 in Section 1–7.

**⚠ CAUTION**

**Before driving, make sure all the tools, jack and flat tire are securely in place in their storage location to reduce the possibility of personal injury during a collision or sudden braking.**

## If your vehicle becomes stuck

If your vehicle becomes stuck in snow, mud, sand, etc., then you may attempt to rock the vehicle free by moving it forward and backward.

Vehicles with traction control system— The traction control system can be turned off to become unstuck to allow the tires to spin enough to remove the vehicle from the obstruction. Contact your Toyota dealer for detailed information.

**⚠ CAUTION**

**Do not attempt to rock the vehicle free by moving it forward and backward if people or objects are anywhere near the vehicle. During the rocking operation the vehicle may suddenly move forward or backward as it becomes unstuck, causing injury or damage to nearby people or objects.**

***NOTICE***

***If you rock your vehicle, observe the following precautions to prevent damage to the transmission and other parts.***

- ***Do not depress the accelerator pedal while shifting the selector lever or before the transmission is completely shifted to forward or reverse gear.***
- ***Do not race the engine and avoid spinning the wheels.***
- ***If your vehicle remains stuck after rocking the vehicle several times, consider other ways such as towing.***

## If your vehicle needs to be towed—

(a) Towing with wheel lift type truck—

—From front

—From rear

(b) Using flat bed truck

O40215

**If towing is necessary, we recommend you to have it done by your Toyota dealer or a commercial tow truck service. In consultation with them, have your vehicle towed using either (a) or (b).**

Proper equipment will help ensure that your vehicle is not damaged while being towed. Commercial operators are generally aware of the state/provincial and local laws pertaining to towing.

Your vehicle can be damaged if it is towed incorrectly. Although most operators know the correct procedure, it is possible to make a mistake. To avoid damage to your vehicle, make sure the following precautions are observed. If necessary, show this page to the tow truck driver.

**TOWING PRECAUTIONS:**

Use a safety chain system for all towing, and abide by the state/provincial and local laws. The wheels and axle on the ground must be in good condition. If they are damaged, use a towing dolly.

**(a) Towing with wheel lift type truck**

**From front—**Release the parking brake.

| NOTICE |
|---|
| ***When lifting wheels, take care to ensure adequate ground clearance for towing at the opposite end of the raised vehicle. Otherwise, the bumper and/or underbody of the towed vehicle will be damaged during towing.*** |

**From rear—**Use a towing dolly under the front wheels.

| NOTICE |
|---|
| ***Never tow from the rear with the front wheels on the ground, as this may cause serious damage to the transmission.*** |

**(b) Using flat bed truck**

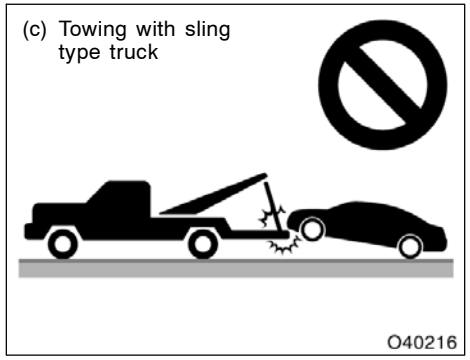


**(c) Towing with sling type truck**

| ***NOTICE*** |
| --- |
| ***Do not tow with sling type truck, either from the front or rear. This may cause body damage.*** |

## If you cannot shift automatic transmission selector lever

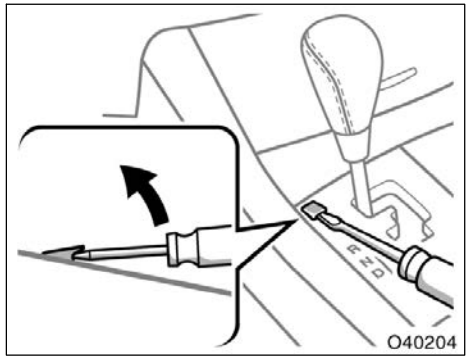


**If you cannot shift the selector lever out of "P" position to other positions even though the brake pedal is depressed, use the shift lock override button as follows:**

1. **Make sure the engine is off and the parking brake is applied.**
2. **Pry up the cover with a flathead screwdriver or equivalent.**

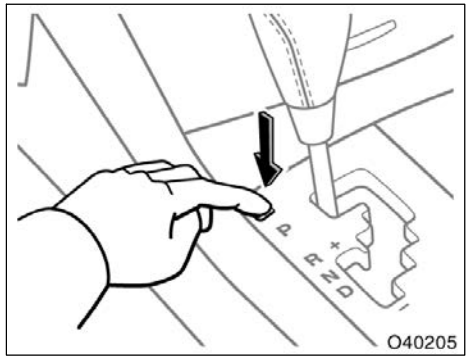


3. **Insert your finger into the hole to push down the shift lock override button. You can shift out of "P" position only while pushing the button.**
4. **Shift into "N" position.**
5. **Insert the cover.**
6. **Start the engine. For your safety, keep the brake pedal depressed.**

Be sure to have the system checked by your Toyota dealer as soon as possible.

## If you lose your keys

**You can purchase a new key at your Toyota dealer if you can give them the key number and master key.**

Vehicles with key cylinder–type ignition switch—Even if you lose only one key, contact your Toyota dealer at the earliest opportunity to make a new key. If you lose all your master keys, you cannot make new keys; the whole engine immobilizer system must be replaced.

Vehicles with smart key system—If you lose any of your keys, contact your Toyota dealer to have new keys made. Lost keys increase the danger of vehicle theft. Bring all of the remaining vehicle keys when you visit your Toyota dealer.

See the suggestion given in “Keys” on pages 12 or 14 in Section 1–2.

If your keys are locked in the vehicle and you cannot get a duplicate, many Toyota dealers can still open the door for you, using their special tools. If you must break a window to get in, we suggest breaking the smallest side window because it is the least expensive to replace. Be extremely cautious to avoid cuts from the glass.

## If you lose your wireless remote control transmitter

**You can purchase a new wireless remote control transmitter at your Toyota dealer.**

Have the registered identification numbers of your transmitters deleted from your vehicle by your Toyota dealer as soon as possible to avoid the possibility of theft or an accident. Then, have the identification number of your new transmitter registered. At the same time, you must bring all of the remaining transmitters to have them registered again as well.

You can use the wireless remote control function with the new transmitter. Contact your Toyota dealer for detailed information.

# SECTION 5

# CORROSION PREVENTION AND APPEARANCE CARE

## Corrosion prevention and appearance care

Protecting your Toyota from corrosion . . . . . 334
Washing and waxing your Toyota . . . . . 335
Cleaning the interior . . . . . 337

## Protecting your Toyota from corrosion

Toyota, through the diligent research, design and use of the most advanced technology available, helps prevent corrosion and provides you with the finest quality vehicle construction. Now, it is up to you. Proper care of your Toyota can help ensure long–term corrosion prevention.

**The most common causes of corrosion to your vehicle are:**

- The accumulation of road salt, dirt and moisture in hard–to–reach areas under the vehicle.
- Chipping of paint, or undercoating caused by minor accidents or by stones and gravel.

**Care is especially important if you live in particular areas or operate your vehicle under certain environmental conditions:**

- Road salt or dust control chemicals will accelerate corrosion, as will the presence of salt in the air near the sea–coast or in areas of industrial pollution.
- High humidity accelerates corrosion especially when temperatures range just above the freezing point.
- Wetness or dampness to certain parts of your vehicle for an extended period of time, may cause corrosion even though other parts of the vehicle may be dry.
- High ambient temperatures can cause corrosion to those components of the vehicle which do not dry quickly due to lack of proper ventilation.

The above signifies the necessity to keep your vehicle, particularly the underside, as clean as possible and to repair any damage to paint or protective coatings as soon as possible.

**To help prevent corrosion on your Toyota, follow these guidelines:**

**Wash your vehicle frequently.** It is, of course, necessary to keep your vehicle clean by regular washing, but to prevent corrosion, the following points should be observed:

- If you drive on salted roads in the winter or if you live near the ocean, you should hose off the undercarriage at least once a month to minimize corrosion.
- High pressure water or steam is effective for cleaning the vehicle's underside and wheel housings. Pay particular attention to these areas as it is difficult to see all the mud and dirt. It will do more harm than good to simply wet the mud and debris without removing. The lower edge of doors, rocker panels and frame members have drain holes which should not be allowed to clog with dirt as trapped water in these areas can cause corrosion.
- Wash the underside of the vehicle thoroughly when winter is over.

See "Washing and waxing your Toyota" on page 335 for more tips.

**Check the condition of your vehicle's paint and trim.** If you find any chips or scratches in the paint, touch them up immediately to prevent corrosion from starting. If the chips or scratches have gone through the bare metal, have a qualified body shop make the repair.

**Check the interior of your vehicle.** Water and dirt can accumulate under the floor mats and could cause corrosion. Occasionally check under the mats to make sure the area is dry. Be particularly careful when transporting chemicals, cleansers, fertilizers, salt, etc.; these should be transported in proper containers. If a spill or leak should occur, immediately clean and dry the area.

**Use mud shields on your wheels.** If you drive on salted or gravel roads, mud shields help protect your vehicle. Full–size shields, which come as near to the ground as possible, are the best. We recommend that the fittings and the area where the shields are installed be treated to resist corrosion. Your Toyota dealer will be happy to assist in supplying and installing the shields if they are recommended for your area.

**Keep your vehicle in a well ventilated garage or a roofed place. Do not park your vehicle in a damp, poorly ventilated garage.** If you wash your vehicle in the garage, or if you drive it covered with water or snow, your garage may be so damp as to cause corrosion. Even if your garage is heated, a wet vehicle can corrode if the ventilation is poor.

## Washing and waxing your Toyota

### Washing your Toyota

**Keep your vehicle clean by regular washing.**

The following cases may cause weakness to the paint or corrosion to the body and parts. Wash your vehicle as soon as possible.

- When driving in a coastal area
- When driving on a road sprinkled with antifreeze
- When exposed to coal tar, tree sap, bird droppings and carcass of an insect
- When driving in areas where there is a lot of smoke, soot, dust, iron dust or chemical substances
- When the vehicle becomes remarkably dirty with dust and mud

### Hand–washing your Toyota

**Work in the shade and wait until the vehicle body is not warm to the touch.**

**⚠ CAUTION**

- **When cleaning under floor or chassis, be careful not to injure your hands.**
- **Exhaust gases cause the exhaust pipe to become quite hot. When washing the vehicle, be careful not to touch the pipe until it has cooled sufficiently, as touching a hot exhaust pipe can cause burns.**

1. Rinse off loose dirt with a hose. Remove any mud or road salt from the underside of the vehicle or the wheel wells.
2. Wash with a mild car–wash soap, mixed according to the manufacturer's instructions. Use a soft cotton mitt and keep it wet by dipping it frequently into the wash water. Do not rub hard—let the soap and water remove the dirt.

Fuel filler door: Do not apply water (high–pressure car wash, for example) at or near the fuel tank inlet with the fuel filler door opened. If the water enters the air vent, you may experience trouble with refueling or rough engine idling.

Plastic wheel ornaments: The plastic wheel ornaments are damaged easily by organic substances. If any organic substances splash an ornament, be sure to wash them off with water and check if the ornament is damaged.

Aluminum wheels: Use only a mild soap or neutral detergent.

Plastic bumpers: Wash carefully. Do not scrub with abrasive cleaners. The bumper faces are soft.

Exterior lights: Wash carefully. Do not use organic substances or scrub them with a hard brush. This may damage the surfaces of the lights.

Road tar: Remove with turpentine or cleaners that are marked safe for painted surfaces.

3. Rinse thoroughly—dried soap can cause streaking. In hot weather you may need to rinse each section right after you wash it.
4. To prevent water spots, dry the vehicle using a clean soft cotton towel. Do not rub or press hard—you might scratch the paint.

**NOTICE**

- ***Do not use organic substances (gasoline, kerosene, benzine or strong solvents), which may be toxic or cause damage.***
- ***Do not scrub any part of the vehicle with a hard brush, which may cause damage.***

### Automatic car wash

Your vehicle may be washed in an automatic car wash, but remember that the paint can be scratched by some types of brushes, unfiltered washing water, or the washing process itself. Scratching reduces paint durability and gloss, especially on darker colors. The manager of the car wash should be able to advise you whether the process is safe for the paint on your vehicle.

### Waxing your Toyota

**Polishing and waxing is recommended to maintain the original beauty of your Toyota's finish.**

Apply wax once a month or if the vehicle surface does not repel water well.

1. Always wash and dry the vehicle before you begin waxing, even if you are using a combined cleaner and wax.
2. Use a good quality polish and wax. If the finish has become extremely weathered, use a car–cleaning polish, followed by a separate wax. Carefully follow the manufacturer's instructions and precautions. Be sure to polish and wax the chrome trim as well as the paint.

Windshield washer nozzles: Make sure that the nozzles do not become blocked when waxing. If a nozzle becomes blocked, contact your Toyota dealer to have the vehicle serviced.

**NOTICE**

***If a nozzle becomes blocked, do not try to clear it with a pin or other object. The nozzle will be damaged.***

Exterior lights: Do not apply wax on the surfaces of the lights. Wax may cause damage to the lenses. If you accidentally put wax on the light surfaces, wipe or wash it off.

3. Wax the vehicle again when water does not bead but remains on the surface in large patches.

## Cleaning the interior

**CAUTION**

- **Be careful not to splash water or spill liquid on the floor. This may prevent the side and curtain shield airbags from activating correctly, resulting in serious injury.**
- **Do not wash the vehicle floor with water, or allow water to get onto the floor when cleaning the vehicle interior or exterior. Water may get into audio components or other electrical components above or under the floor carpet (or mat) and cause a malfunction; and it may cause body corrosion.**

### Vinyl interior

**The vinyl upholstery may be easily cleaned with a mild soap or detergent and water.**

First vacuum over the upholstery to remove loose dirt. Then, using a sponge or soft cloth, apply the soap solution to the vinyl. After allowing it to soak in for a few minutes to loosen the dirt, remove the dirt and wipe off the soap with a clean damp cloth. If all the dirt does not come off, repeat the procedure. Commercial foaming–type vinyl cleaners are also available which work well. Follow the manufacturer's instructions.

***NOTICE***

***Do not use solvent, thinner, gasoline or window cleaner on the interior.***

### Carpets

**Use a good foam–type shampoo to clean the carpets.**

Begin by vacuuming thoroughly to remove as much dirt as possible. Several types of foam cleaners are available; some are in aerosol cans and others are powders or liquids which you mix with water to produce a foam. To shampoo the carpets, use a sponge or brush to apply the foam. Rub in overlapping circles.

Do not apply water—the best results are obtained by keeping the carpet as dry as possible. Read the shampoo instructions and follow them closely.

**Seat belts**

**The seat belts may be cleaned with mild soap and water or with lukewarm water.**

Use a cloth or sponge. As you are cleaning, check the belts for excessive wear, fraying, or cuts.

**NOTICE**

- ***Do not use dye or bleach on the belts—it may weaken them.***
- ***Do not use the belts until they become dry.***

**Windows**

**The windows may be cleaned with any household window cleaner.**

**NOTICE**

- ***When cleaning the inside of the rear window, be careful not to scratch or damage the heater wires or connectors.***
- ***When cleaning the inside of the rear window, be careful not to scratch or damage the printed antenna.***

**Air conditioning control panel, audio panel, instrument panel, console panel, and switches**

**Use a soft damp cloth for cleaning.**

Soak a clean soft cloth in water or lukewarm water then lightly wipe off dirt.

**NOTICE**

- ***Do not use organic substances (solvents, kerosene, alcohol, gasoline, etc.) or alkaline or acidic solutions. These chemicals can cause discoloring, staining or peeling of the surface.***
- ***If you use cleaners or polishing agents, make sure their ingredients do not include the substances mentioned above.***
- ***If you use a liquid car freshener, do not spill the liquid onto the vehicle's interior surfaces. It may contain the ingredients mentioned above. Immediately clean any spill using the method mentioned above.***

**Leather interior**

**The leather upholstery may be cleaned with neutral detergent for wool.**

Remove dirt using a soft cloth dampened with 5% solution of neutral detergent for wool. Then thoroughly wipe off all traces of detergent with a clean damp cloth.

After cleaning or whenever any part of the leather gets wet, dry with a soft clean cloth. Allow the leather to dry in a ventilated shaded area.

**NOTICE**

- ***If a stain should fail to come out with a neutral detergent, apply a cleaner that does not contain an organic solvent.***
- ***Never use organic substances such as benzine, alcohol or gasoline, or alkaline or acid solutions for cleaning the leather as these could cause discoloring.***
- ***Use of a nylon brush or synthetic fiber cloth, etc. may scratch the fine grained surface of the leather.***
- ***Mildew may develop on soiled leather upholstery. Be especially careful to avoid oil spots. Try to keep your upholstery always clean.***
- ***Long exposure to direct sunlight may cause the leather surface to harden and shrink. Keep your vehicle in a shaded area, especially in the summer.***
- ***The interior of your vehicle is apt to heat up on hot summer days, so avoid placing on the upholstery items made of vinyl or plastic or containing wax as these tend to stick to leather when warm.***
- ***Improper cleaning of the leather upholstery could result in discoloration or staining.***

**If you have any questions about the cleaning of your Toyota, your local Toyota dealer will be pleased to answer them.**

# SECTION 6

# VEHICLE MAINTENANCE AND CARE

## Vehicle maintenance and care

Maintenance requirements . . . . . 342
General maintenance . . . . . 343
Does your vehicle need repairing? . . . . . 345
Emissions Inspection and Maintenance (I/M) programs . . . . . 346

For scheduled maintenance information, please refer to the “Scheduled Maintenance Guide” or “Owner’s Manual Supplement”.

## Maintenance requirements

Your Toyota vehicle has been designed for fewer maintenance requirements with longer service intervals to save both your time and money. However, each regular maintenance, as well as day–to–day care, is more important than ever before to ensure smooth, and trouble–free, safe, and economical drivings.

It is the owner's responsibility to make sure the specified maintenance, including general maintenance service, is performed. Note that both the new vehicle and emission control system warranties specify that proper maintenance and care must be performed. See "Owner's Warranty Information Booklet" or "Owner's Manual Supplement" for complete warranty information.

### General maintenance

General maintenance items are those day–to–day care practices that are important to your vehicle for proper operation. It is the owner's responsibility to ensure that the general maintenance items are performed regularly.

These checks or inspections can be done either by yourself or a qualified technician, or if you prefer, your Toyota dealer will be pleased to do them at a nominal cost.

### Scheduled maintenance

The scheduled maintenance items listed in the "Scheduled Maintenance Guide" or "Owner's Manual Supplement" are those required to be serviced at regular intervals.

For details of your maintenance schedule, read the "Scheduled Maintenance Guide" or "Owner's Manual Supplement".

**It is recommended that any replacement parts used for maintenance or for the repair of the emission control system be Toyota supplied.**

**The owner may elect to use non–Toyota supplied parts for replacement purposes without invalidating the emission control system warranty. However, use of replacement parts which are not of equivalent quality may impair the effectiveness of the emission control systems.**

**You may also elect to have maintenance, replacement, or repair of the emission control devices and system performed by any automotive repair establishment or individual without invalidating this warranty. See "Owner's Warranty Information Booklet" or "Owner's Manual Supplement" for complete warranty information.**

### Where to go for service?

Toyota technicians are well–trained specialists and are kept up to date with the latest service information through technical bulletins, service tips, and in–dealership training programs. They learn to work on Toyotas before they work on your vehicle, rather than while they are working on it.

You can be confident that your Toyota dealer's service department performs the best job to meet the maintenance requirements on your vehicle—reliably and economically.

Your copy of the repair order is proof that all required maintenance has been performed for warranty coverage. If any problems should arise with your vehicle while under warranty, your Toyota dealer will promptly take care of it. Again, be sure to keep a copy of the repair order for any service performed on your Toyota.

## General maintenance

**What about do–it–yourself maintenance?**

Many of the maintenance items are easy to do yourself if you have a little mechanical ability and a few basic automotive tools. Simple instructions for how to perform them are presented on page 347 in Section 7.

If you are a skilled do–it–yourself mechanic, the Toyota service manuals are recommended. Please be aware that do–it–yourself maintenance can affect your warranty coverage. See “Owner’s Warranty Information Booklet” or “Owner’s Manual Supplement” for the details.

Listed below are the general maintenance items that should be performed as frequently as specified. In addition to checking the items listed, if you notice any unusual noise, smell or vibration, you should investigate the cause or take your vehicle to your Toyota dealer or a qualified service shop immediately. It is recommended that any problem you notice be brought to the attention of your dealer or the qualified service shop for their advice.

**⚠ CAUTION**

**Make these checks only with adequate ventilation if you run the engine.**

### IN THE ENGINE COMPARTMENT

**Items listed below should be checked from time to time, e.g. each time when refueling.**

**Washer fluid**
Make sure there is sufficient fluid in the tank. See page 375 in Section 7–3 for additional information.

**Engine coolant level**
Make sure the coolant level is between the “F” and “L” lines on the see–through reservoir when the engine is cold. See page 358 in Section 7–2 for additional information.

**Radiator, condenser and hoses**
Check that the front of the radiator and condenser are clean and not blocked with leaves, dirt, or insects. See page 359 in Section 7–2 for additional information.

**Battery condition**
Check the battery condition by the indicator color. See page 373 in Section 7–3 for additional information.

**Brake fluid level**
Make sure the brake fluid level is correct. See page 359 in Section 7–2 for additional information.

**Engine oil level**
Check the level on the dipstick with the engine turned off and the vehicle parked on a level spot. See page 356 in Section 7–2 for additional information.

**Power steering fluid level**
Check the level through the reservoir. The level should be in the “HOT” or “COLD” range depending on the fluid temperature. See page 360 in Section 7–2 for additional information.

**Exhaust system**
If you notice any change in the sound of the exhaust or smell exhaust fumes, have the cause located and corrected immediately. (See “Engine exhaust cautions” on page 270 in Section 2.)

**INSIDE THE VEHICLE**

**Items listed below should be checked regularly, e.g. while performing periodic services, cleaning the vehicle, etc.**

**Lights**
Make sure the headlights, stop lights, tail lights, turn signal lights, and other lights are all working. Check headlight aim.

**Service reminder indicators and warning buzzers**
Check that all service reminder indicators and warning buzzers function properly.

**Steering wheel**
Check that it has the specified free play. Be alert for changes in steering condition, such as hard steering or strange noise.

**Seats**
Check that all front seat controls such as seat adjusters, seatback recliner, etc. operate smoothly and that all latches lock securely in any position. Check that the head restraints move up and down smoothly and that the locks hold securely in any latched position.

**Seat belts**
Check that the seat belt system such as buckles, retractors and anchors operate properly and smoothly. Make sure the belt webbing is not cut, frayed, worn or damaged.

**Accelerator pedal**
Check the pedal for smooth operation and uneven pedal effort or catching.

**Brake pedal**
Check the pedal for smooth operation and that the pedal has the proper clearance. Check the brake booster function.

**Brakes**
In a safe place, check that the brakes do not pull to one side when applied.

**Parking brake**
Check that the pedal has the proper travel and that, on a safe incline, your vehicle is held securely with only the parking brake applied.

**Automatic transmission “Park” mechanism**
Check the lock release button of the selector lever for proper and smooth operation. On a safe incline, check that your vehicle is held securely with the selector lever in “P” position and all brakes released.

**OUTSIDE THE VEHICLE**

**Items listed below should be performed from time to time, unless otherwise specified.**

**Wiper blades**

Check for wear or cracks whenever they do not wipe cleanly. See page 375 in Section 7–3 for additional information.

**Fluid leaks**
Check underneath for leaking fuel, oil, water or other fluid after the vehicle has been parked for a while. If you smell fuel fumes or notice any leak, have the cause found and corrected immediately.

**Doors and engine hood**
Check that all doors including trunk lid operate smoothly and all latches lock securely. Make sure the engine hood secondary latch secures the hood from opening when the primary latch is released.

## Tire inflation pressure

Check the pressure with a gauge every two weeks, or at least once a month. See page 361 in Section 7–2 for additional information.

### Tire surface and wheel nuts

Check the tires carefully for cuts, damage or excessive wear. See page 363 in Section 7–2 for additional information. When checking the tires, make sure no nuts are missing, and check the nuts for looseness. Tighten them if necessary.

### Tire rotation

Rotate the tires according to the maintenance schedule. (For scheduled maintenance information, please refer to the “Scheduled Maintenance Guide” or “Owner’s Manual Supplement”.) See page 365 in Section 7–2 for additional information.

## Does your vehicle need repairing?

Be on the alert for changes in performance, sounds, and visual tip–offs that indicate service is needed. Some important clues are as follows:

- Engine missing, stumbling, or pinging
- Appreciable loss of power
- Strange engine noises
- A leak under the vehicle (however, water dripping from the air conditioning after use is normal.)
- Change in exhaust sound (This may indicate a dangerous carbon monoxide leak. Drive with the windows open and have the exhaust system checked immediately.)
- Flat–looking tire; excessive tire squeal when cornering; uneven tire wear
- Vehicle pulls to one side when driving straight on a level road
- Strange noises related to suspension movement
- Loss of brake effectiveness; spongy feeling brake pedal; pedal almost touches floor; vehicle pulls to one side when braking
- Engine coolant temperature continually higher than normal

If you notice any of these clues, take your vehicle to your Toyota dealer as soon as possible. It probably needs adjustment or repair.

**⚠ CAUTION**

**Do not continue driving with the vehicle unchecked. It could result in serious vehicle damage and possibly personal injury.**

## Emissions Inspection and Maintenance (I/M) programs

Some states have vehicle emission inspection programs which include OBD (On–Board Diagnostics) checks.

The OBD system monitors the operation of the emission control system. When the OBD system determines that a problem exists somewhere in the emission control system, the malfunction indicator lamp comes on. In this case, your vehicle may not pass the I/M test and need to be repaired. Contact your Toyota dealer to service the vehicle.

Even if the malfunction indicator lamp does not come on, your vehicle may not pass the I/M test as readiness codes have not been set in the OBD system.

Readiness codes are automatically set during ordinary driving. However, when the battery is disconnected or run down, the codes are erased. Also, depending on your driving habits, the codes may not be completely set.

Also, if the malfunction indicator lamp had come on recently due to temporary malfunction such as a loose fuel tank cap, your vehicle may not pass the I/M test.

The malfunction indicator lamp will go off after taking several driving trips, but the error code in the OBD system will not be cleared unless about 40 trips or more are taken.

If your vehicle does not pass the I/M test even the malfunction indicator lamp does not come on, contact your Toyota dealer to prepare the vehicle for re–testing.

# SECTION 7 – 1

## DO–IT–YOURSELF MAINTENANCE

### Introduction

Engine compartment overview . . . . . 348
Fuse locations . . . . . 349
Do–it–yourself service precautions . . . . . 349
Positioning the jack . . . . . 351
Parts and tools . . . . . 352

## Engine compartment overview

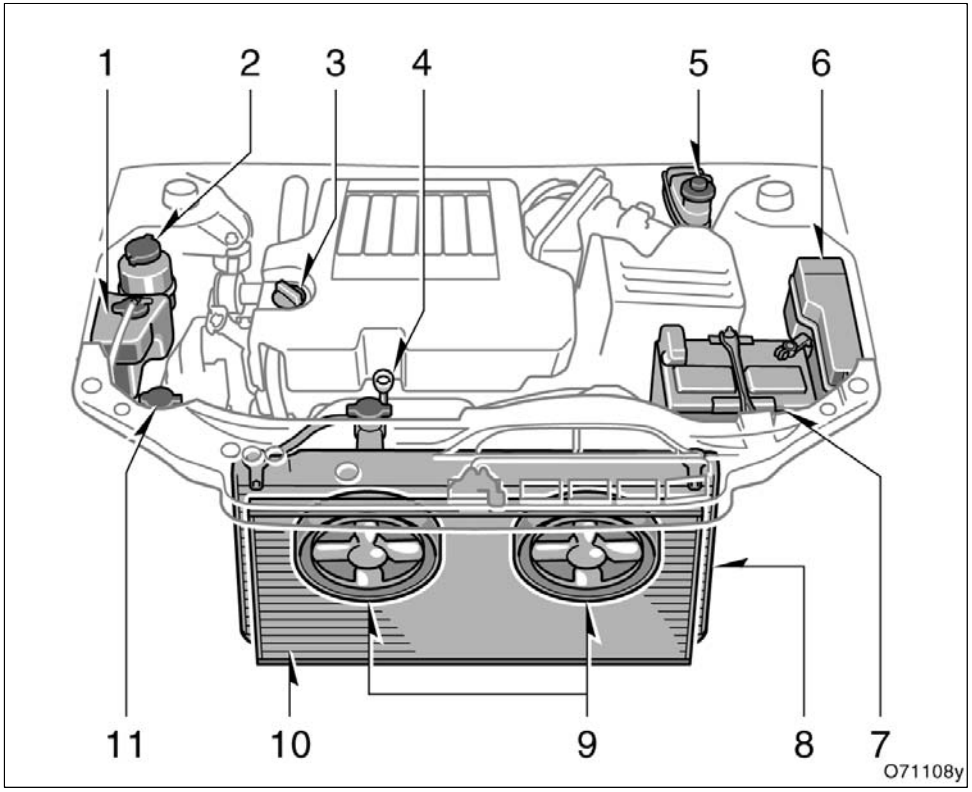


1. Engine coolant reservoir
2. Power steering fluid reservoir
3. Engine oil filler cap
4. Engine oil level dipstick
5. Brake fluid reservoir
6. Fuse block
7. Battery
8. Radiator
9. Electric cooling fans
10. Condenser
11. Windshield washer fluid tank

## Fuse locations

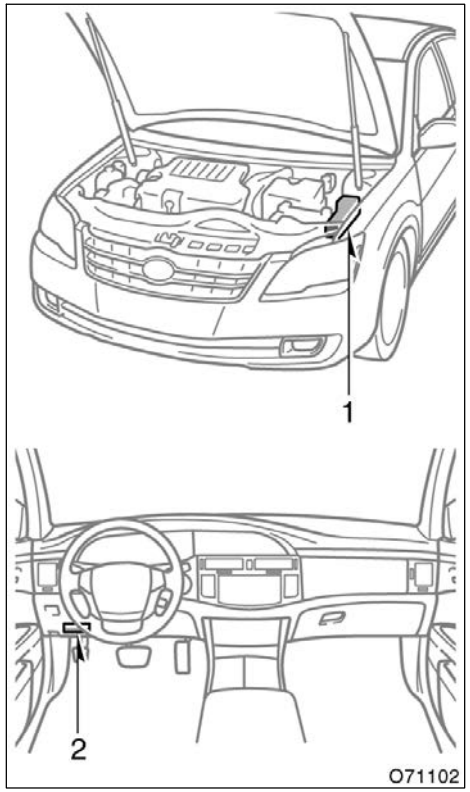


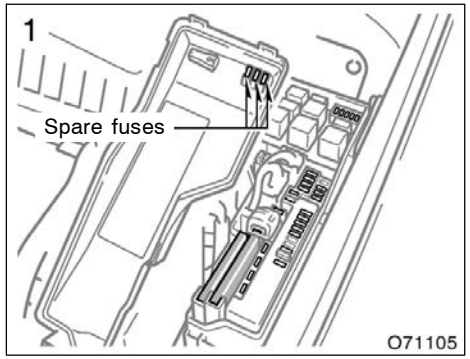


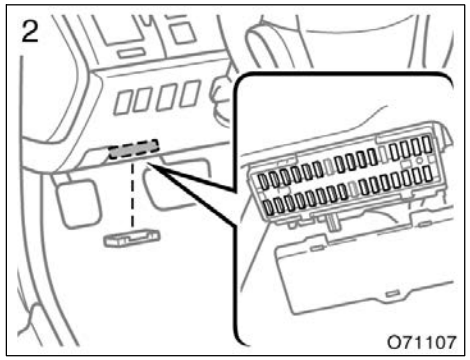


## Do–it–yourself service precautions

**If you perform maintenance by yourself, be sure to follow the correct procedure given in this Section.**

You should be aware that improper or incomplete servicing may result in operating problems.

Performing do–it–yourself maintenance during the warranty period may affect your warranty coverage. Read the separate Toyota Warranty statement for details and suggestions.

This Section gives instructions only for those items that are relatively easy for an owner to perform. As explained in Section 6, there are still a number of items that must be done by a qualified technician with special tools.

For information on tools and parts for do–it–yourself maintenance, see “Parts and tools” on page 352 in this Section.

Utmost care should be taken when working on your vehicle to prevent accidental injury. Here are a few precautions that you should be especially careful to observe:

**⚠ CAUTION**

- When the engine is running, keep hands, clothing, and tools away from the moving fan and engine drive belts. (Removing rings, watches, and ties is advisable.)
- Right after driving, the engine compartment—the engine, radiator, exhaust manifold and spark plug boots, etc.—will be hot. So be careful not to touch them. Oil, fluids and spark plugs may also be hot.
- If the engine is hot, do not remove the radiator cap or loosen the drain plugs to prevent burning yourself.
- Do not leave anything that may burn easily, such as paper or rags, in the engine compartment.
- Do not smoke, cause sparks or allow open flames around fuel or the battery. Their fumes are flammable.
- Do not get under your vehicle with just the body jack supporting it. Always use automotive jack stands or other solid supports.

- Be sure that the ignition is off if you work near the electric cooling fans or radiator grille. With the ignition on, the electric cooling fans will automatically start to run if the engine coolant temperature is high and/or the air conditioning is on.
- Use eye protection whenever you work on or under your vehicle where you may be exposed to flying or falling material, fluid spray, etc.
- Used engine oil contains potentially harmful contaminants which may cause skin disorders such as inflammation or skin cancer, so care should be taken to avoid prolonged and repeated contact with it. To remove used engine oil from your skin, wash thoroughly with soap and water.
- Do not leave used oil within the reach of children.
- Dispose of used oil and filter only in a safe and acceptable manner. Do not dispose of used oil and filter in household trash, in sewers or onto the ground. Call your dealer or a service station for information concerning recycling or disposal.

- Be extremely cautious when working on the battery. It contains poisonous and corrosive sulfuric acid.

***NOTICE***

- *Remember that battery and ignition cables carry high currents or voltages. Be careful of accidentally causing a short circuit.*
- *Add only "Toyota Super Long Life Coolant" or similar high quality ethylene glycol based non−silicate, non−amine, non−nitrite, and non−borate coolant with long−life hybrid organic acid technology to fill the radiator. "Toyota Super Long Life Coolant" is a mixture of 50% coolant and 50% deionized water (for the U.S.A.) or 55% coolant and 45% deionized water (for Canada).*
- *If you spill some of the coolant, be sure to wash it off with water to prevent it from damaging the parts or paint.*

- *Do not allow dirt or anything else to fall through the spark plug holes.*
- *Do not pry the outer electrode of a spark plug against the center electrode.*
- *Use only spark plugs of the specified type. Using other types will cause engine damage, loss of performance or radio noise.*
- *Do not reuse iridium–tipped spark plugs by cleaning or regapping.*
- *Do not overfill automatic transmission fluid and power steering fluid, or the transmission and power steering could be damaged.*
- *Do not drive with the air cleaner filter removed, or excessive engine wear could result. Also backfiring could cause a fire in the engine compartment.*
- *Be careful not to scratch the glass surface with the wiper frame.*
- *When closing the engine hood, check to see that you have not forgotten any tools, rags, etc.*

## Positioning the jack

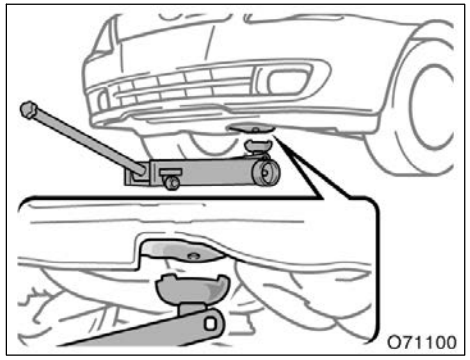


**Front**

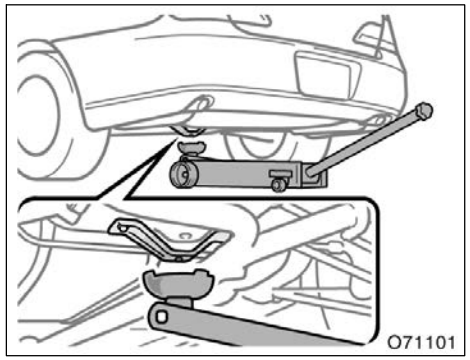


**Rear**

**When jacking up your vehicle with the jack, position the jack correctly as shown in the illustrations.**

**⚠ CAUTION**

**When jacking, be sure to observe the following to reduce the possibility of death or serious injury:**

- **Follow jacking instructions.**
- **Do not put any part of your body under the vehicle supported by the jack. Personal injury may occur.**
- **Do not start or run the engine while your vehicle is supported by the jack.**
- **Stop the vehicle on a level firm ground, firmly set the parking brake and put the transmission in "P". Block the wheels on the opposite side of the jack up point if necessary.**
- **Make sure to set the jack properly in the jack point. Raising the vehicle with jack improperly positioned will damage the vehicle or may allow the vehicle to fall off the jack and cause personal injury.**

- **Never get under the vehicle when the vehicle is supported by the jack alone; use vehicle support stands.**
- **Do not raise the vehicle with someone in the vehicle.**
- **When raising the vehicle, do not place any objects on top of or underneath the jack.**

***NOTICE***

***Make sure to place the jack correctly, or your vehicle may be damaged.***

## Parts and tools

Here is a list of parts and tools you will need to perform do–it–yourself maintenance. Remember all Toyota parts are designed in metric sizes, so your tools must be metric.

**CHECKING THE ENGINE OIL LEVEL**

**Parts (if level is low):**

- "Toyota Genuine Motor Oil" or equivalent

  See page 357 in Section 7–2 for details about engine oil selection.

**Tools:**

- Rag or paper towel
- Funnel (only for adding oil)

**CHECKING THE ENGINE COOLANT LEVEL**

**Parts (if level is low):**

- "Toyota Super Long Life Coolant" or similar high quality ethylene glycol based non–silicate, non–amine, non–nitrite, and non–borate coolant with long–life hybrid organic acid technology.

  "Toyota Super Long Life Coolant" is a mixture of 50% coolant and 50% deionized water (for the U.S.A.) or 55% coolant and 45% deionized water (for Canada).

**Tools:**

- Funnel (only for adding coolant)

**CHECKING BRAKE FLUID**

**Parts (if level is low):**

- SAE J1703 or FMVSS No.116 DOT 3 brake fluid

**Tools:**

- Rag or paper towel
- Funnel (only for adding fluid)

**CHECKING POWER STEERING FLUID**

**Parts (if level is low):**

- Automatic transmission fluid DEXRON®II or III

**Tools:**

- Rag or paper towel
- Funnel (only for adding fluid)

**CHECKING BATTERY CONDITION**

**Tools:**

- Warm water
- Baking soda
- Grease
- Conventional wrench (for terminal clamp bolts)

## CHECKING AND REPLACING FUSES

**Parts (if replacement is necessary):**

- Fuse with same amperage rating as original

## ADDING WASHER FLUID

**Parts:**

- Water
- Washer fluid containing antifreeze (for winter use)

**Tools:**

- Funnel

## REPLACING LIGHT BULBS

**Parts:**

- Bulb with same number and wattage rating as original (See charts in “Replacing light bulbs” on page 377 in Section 7–3.)

**Tools:**

- Screwdriver

# SECTION 7 – 2

## DO–IT–YOURSELF MAINTENANCE

### Engine and Chassis


Checking the engine oil level . . . . . 356
Checking the engine coolant level . . . . . 358
Checking the radiator and condenser . . . . . 359
Checking brake fluid . . . . . 359
Checking power steering fluid . . . . . 360
Checking tire inflation pressure . . . . . 361
Checking and replacing tires . . . . . 363
Rotating tires . . . . . 365
Installing snow tires and chains . . . . . 367
Replacing wheels . . . . . 368
Aluminum wheel precautions . . . . . 369

## Checking the engine oil level

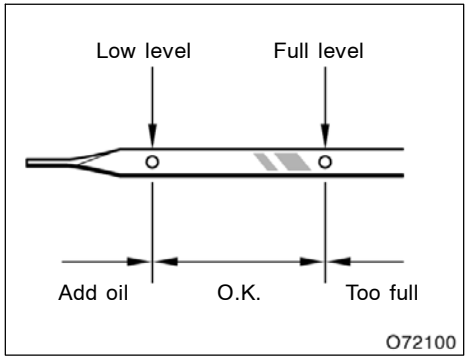


**With the engine at operating temperature and turned off, check the oil level on the dipstick.**

1. To get a correct reading, the vehicle should be on level ground. After turning off the engine, wait a few minutes for the oil to drain back into the bottom of the engine.
2. Pull the dipstick out, hold a rag under the end and wipe it clean.
3. Reinsert the dipstick—push it in as far as it will go, or the reading will not be correct.
4. Pull the dipstick out and look at the oil level while holding a rag under the end.

**⚠ CAUTION**

**Be careful not to touch the hot exhaust manifold.**

***NOTICE***

***Be careful not to drop engine oil on the vehicle components.***

**If the oil level is below or only slightly above the low level, add engine oil of the same type as already in the engine.**

Remove the oil filler cap and add engine oil in small quantities at a time, checking the dipstick. We recommend that you use a funnel when adding oil.

The approximate quantity of oil needed to raise the level between low and full on the dipstick is indicated as follows:
1.5 L (1.6 qt., 1.3 Imp. qt.)

For the engine oil capacity, see “Service specifications” on page 383 in Section 8.

When the level reaches within the correct range, install the filler cap hand–tight.

***NOTICE***

- ***Be careful not to spill engine oil on the vehicle components.***
- ***Avoid overfilling, or the engine could be damaged.***
- ***Check the oil level on the dipstick once again after adding the oil.***

## ENGINE OIL SELECTION

"Toyota Genuine Motor Oil" is used in your Toyota vehicle. Use Toyota approved "Toyota Genuine Motor Oil" or equivalent to satisfy the following grade and viscosity.

Oil grade:
ILSAC multigrade engine oil

Recommended viscosity:
SAE 5W–30

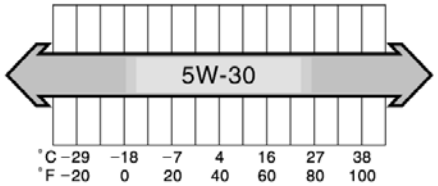


Outside temperature

OIL008

**SAE 5W–30 is the best choice for good fuel economy, and good starting in cold weather.**

**If SAE 5W–30 oil is not available, SAE 10W–30 oil may be used. However, it should be replaced with SAE 5W–30 at the next oil change.**

API-02

### Oil identification mark

The ILSAC (International Lubricant Standardization and Approval Committee) Certification Mark is added to some oil containers to help you select the oil you should use.

To ensure excellent lubrication performance for your engine, “Toyota Genuine Motor Oil” is available, which has been specifically tested and approved for all Toyota engines.

Please contact your Toyota dealer for further details about “Toyota Genuine Motor Oil”.

## Checking the engine coolant level

**Look at the see–through coolant reservoir when the engine is cold. The coolant level is satisfactory if it is between the “F” and “L” lines on the reservoir. If the level is low, add the coolant. (For the coolant type, see “Coolant type selection” described below.)**

The coolant level in the reservoir will vary with engine temperature. However, if the level is on or below the “L” line, add coolant. Bring the level up to the “F” line.

If the coolant level drops within a short time after replenishing, there may be a leak in the system. Visually check the radiator, hoses, radiator cap and drain cock and water pump.

If you can find no leak, have your Toyota dealer test the cap pressure and check for leaks in the cooling system.

**CAUTION**

**To prevent burning yourself, do not remove the radiator cap when the engine is hot.**

### Coolant type selection

Use of improper coolants may damage your engine cooling system.

Only use “Toyota Super Long Life Coolant” or similar high quality ethylene glycol based non–silicate, non–amine, non–nitrite, and non–borate coolant with long–life hybrid organic acid technology. (Coolant with long–life hybrid organic acid technology is a combination of low phosphates and organic acids.)

For the U.S.A.—“Toyota Super Long Life Coolant” is a mixture of 50% coolant and 50% deionized water. This coolant provides protection down to about –35°C (–31°F).

For Canada—“Toyota Super Long Life Coolant” is a mixture of 55% coolant and 45% deionized water. This coolant provides protection down to about –42°C (–44°F).

***NOTICE***

***Do not use plain water alone.***

Toyota recommends “Toyota Super Long Life Coolant”, which has been tested to ensure that it will not cause corrosion nor result in malfunction of your engine coolant system with proper usage. “Toyota Super Long Life Coolant” is formulated with long–life hybrid organic acid technology and has been specifically designed to avoid engine cooling system malfunction on Toyota vehicles.

Please contact your Toyota dealer for further details.

## Checking the radiator and condenser

If any of the above parts are extremely dirty or you are not sure of their condition, take your vehicle to a Toyota dealer.

**CAUTION**

**To prevent burning yourself, be careful not to touch the radiator or condenser when the engine is hot after driving.**

***NOTICE***

***To prevent damage to the radiator and condenser, do not perform the work by yourself.***

## Checking brake fluid

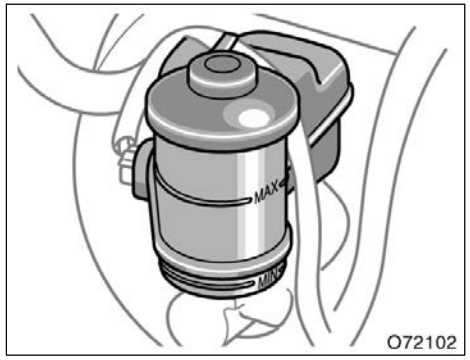


**To check the fluid level, simply look at the see–through reservoir. The level should be between the “MAX” and “MIN” lines on the reservoir.**

It is normal for the brake fluid level to go down slightly as the brake pads wear. So be sure to keep the reservoir filled.

If the reservoir needs frequent refilling, it may indicate a serious mechanical problem.

**If the level is low, add SAE J1703 or FMVSS No.116 DOT 3 brake fluid to the brake reservoir.**

Remove and replace the reservoir cap by hand. Fill the brake fluid to the dotted line. This brings the fluid to the correct level when you put the cap back on.

Use only newly opened brake fluid. Once opened, brake fluid absorbs moisture from the air, and excess moisture can cause a dangerous loss of braking.

**⚠ CAUTION**

**Take care when filling the reservoir because brake fluid can harm your hands or eyes. If fluid gets on your hands or in your eyes, flush the affected area with clean water immediately. If you still feel uncomfortable with your hands or eyes, go to the doctor.**

***NOTICE***

***If you spill some of the fluid, be sure to wipe it off to prevent it from damaging the parts or paintwork.***

## Checking power steering fluid

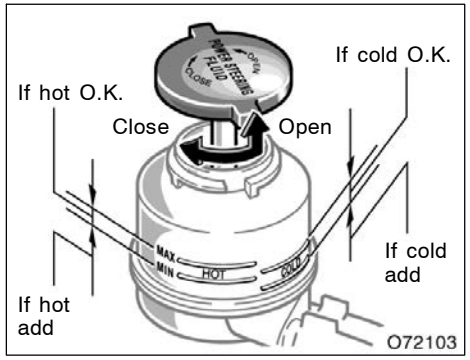


**Check the fluid level through the reservoir. If necessary, add automatic transmission fluid DEXRON®II or III.**

If the vehicle has been driven around 80 km/h (50 mph) for 20 minutes (a little more in frigid temperatures), the fluid is hot (60°C—80°C or 140°F—175°F). You may also check the level when the fluid is cold (about room temperature, 10°C—30°C or 50°F—85°F) if the engine has not been run for about five hours.

Clean all dirt from the outside of the reservoir tank and look at the fluid level. If the fluid is cold, the level should be in the “COLD” range. Similarly, if it is hot, the fluid level should be in the “HOT” range. If the level is at the low side of either range, add automatic transmission fluid DEXRON®II or III to bring the level within the range.

To remove the reservoir cap, turn it counterclockwise and lift up. To reinstall it, turn it clockwise. After replacing the reservoir cap, visually check the steering box case, vane pump and hose connections for leaks or damage.

**⚠ CAUTION**

**The reservoir tank may be hot so be careful not to burn yourself.**

***NOTICE***

***Avoid overfilling, or the power steering could be damaged.***

## Checking tire inflation pressure

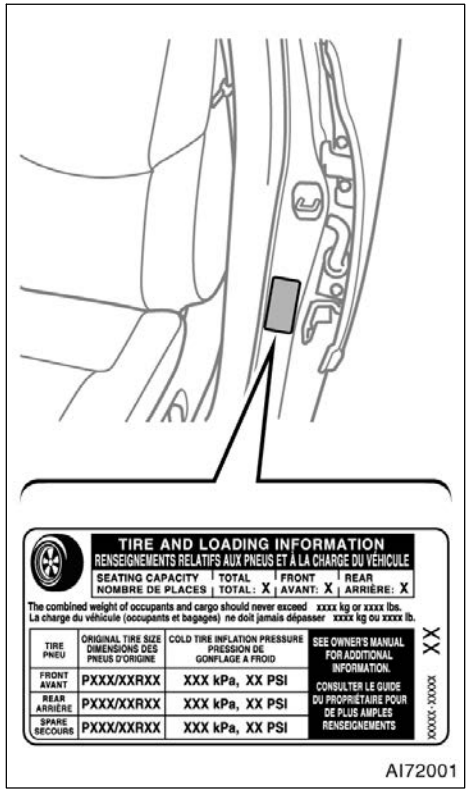


**Keep your tire inflation pressures at the proper level.**

The recommended cold tire inflation pressures, tire sizes and the combined weight of occupants and cargo (vehicle capacity weight) are described on page 382 in Section 8. They are also on the tire and loading information label.

You should check the tire inflation pressure every two weeks, or at least once a month. And do not forget the spare!

**The following instructions for checking tire inflation pressure should be observed:**

- **The pressure should be checked only when the tires are cold.** If your vehicle has been parked for at least 3 hours and has not been driven for more than 1.5 km or 1 mile since, you will get an accurate cold tire inflation pressure reading.
- **Always use a tire pressure gauge.** The appearance of a tire can be misleading. Besides, tire inflation pressures that are even just a few pounds off can degrade ride and handling.
- **Take special care when adding air to the compact spare tire.** The smaller tire size can gain pressure very quickly. Add compressed air in small quantities and check the pressure often until it reaches the specified pressure.

- **Do not bleed or reduce tire inflation pressure after driving.** It is normal for the tire inflation pressure to be higher after driving.
- **Never exceed the vehicle capacity weight.** Passenger and luggage weight should be located so that the vehicle is balanced.

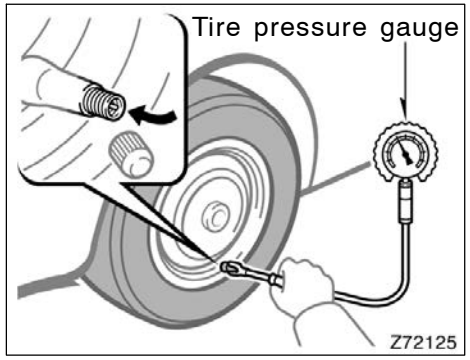


**INSPECTION AND ADJUSTMENT PROCEDURE**

1. Remove the tire valve cap.
2. Press the tip of the tire pressure gauge to the tire valve.
3. Read the pressure using the graduations of the gauge.
4. In case the tire inflation pressure is not within the prescribed range, insert the compressed air from the valve. In case of applying too much air, press the center of the valve and release the air to adjust.
5. After completing the tire inflation pressure measurement and adjustment, apply soapy water to the valve and check for leakage.
6. Install the tire valve cap.

If a gauge and air pump are not available, have your vehicle checked by your Toyota dealer.

**⚠ CAUTION**

**Be sure to reinstall the tire valve caps. Without the valve caps, dirt or moisture could get into the valve core and cause air leakage. If the caps have been lost, have new ones put on as soon as possible.**

Incorrect tire inflation pressure may waste fuel, reduce the comfort of driving, reduce tire life and make your vehicle less safe to drive.

If a tire frequently needs refilling, have it checked by your Toyota dealer.

**⚠ CAUTION**

**Keep your tires properly inflated. Otherwise, the following conditions may occur and cause an accident resulting in death or serious injuries.**

**Low tire pressure (underinflation)—**

- **Excessive wear**
- **Uneven wear**
- **Poor handling**
- **Possibility of blowouts from an overheated tire**
- **Poor sealing of the tire bead**
- **Wheel deformation and/or tire separation**
- **A greater possibility of tire damage from road hazards**

**High tire pressure (overinflation)—**

- **Poor handling**
- **Excessive wear**
- **Uneven wear**
- **A greater possibility of tire damage from road hazards**

## Checking and replacing tires

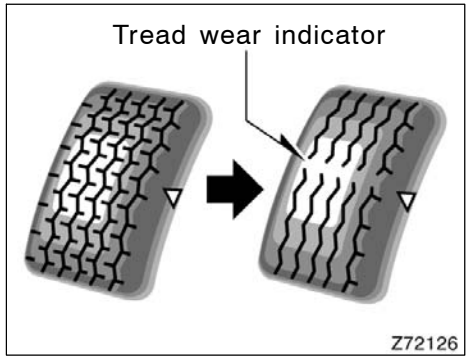


### CHECKING YOUR TIRES

**Check the tire's tread for tread wear indicators. If the indicators show, replace the tires. The location of tread wear indicators is shown by the "TWI" or "Δ" marks, etc., molded on the sidewall of each tire.**

The tires on your Toyota have built–in tread wear indicators to help you know when the tires need replacement. When the tread depth wears to 1.6 mm (0.06 in.) or less, the indicators will appear. If you can see the indicators in two or more adjacent grooves, the tire should be replaced. The lower the tread, the higher the risk of skidding.

**The effectiveness of snow tires is lost if the tread wears down below 4 mm (0.16 in.).**

**If you have tire damage such as cuts, splits, cracks deep enough to expose the fabric, or bulges indicating internal damage, the tire should be replaced.**

If a tire often goes flat or cannot be properly repaired due to the size or location of a cut or other damage, it should be replaced. If you are not sure, consult with your Toyota dealer.

If air loss occurs while driving, do not continue driving. Driving even a short distance can damage a tire beyond repair.

**Any tires which are over 6 years old must be checked by a qualified technician even if damage is not obvious.**

Tires deteriorate with age even if they have never or seldom been used.

This applies also to the spare tire and tires stored for future use.

## REPLACING YOUR TIRES

**When replacing a tire, use a tire of the same size and construction, and the same or greater maximum load as the originally installed tires.**

Using any other size or type of tire may seriously affect handling, ride, speedometer/odometer calibration, ground clearance, and clearance between the body and tires or snow chains.

Check that the maximum load of the replaced tire is greater than 1/2 of the Gross Axle Weight Ratings (GAWR) of either the front axle or the rear axle, whichever is greater. As for the maximum load of the tire, see the load limit at maximum cold tire inflation pressure mentioned on the sidewall of the tire, and as for the Gross Axle Weight Ratings (GAWR), see the Certification Label.

For details about the side wall of the tire and the Certification Label, see pages 277 and 279.

**⚠ CAUTION**

**Observe the following instructions. Otherwise, an accident may occur resulting in death or serious injuries.**

- **Do not mix radial, bias belted, or bias−ply tires on your vehicle, as this may cause dangerous handling characteristics resulting in loss of control.**
- **Do not use tires other than the manufacturer's recommended size, as this may cause dangerous handling characteristics resulting in loss of control.**

**Toyota recommends all four tires, or at least both of the front or rear tires be replaced at a time as a set.**

See "If you have a flat tire" on page 320 for tire change procedure.

**When a tire is replaced, the wheel should always be balanced.**

An unbalanced wheel may affect vehicle handling and tire life. Wheels can get out of balance with regular use and should therefore be balanced occasionally.

**When replacing a tubeless tire, the air valve should also be replaced with a new one.**

**Initial adjustment of the tire pressure warning system is necessary after you have replaced your tires. See "Tire pressure warning system" on page 169 in Section 1−7.**

## Rotating tires

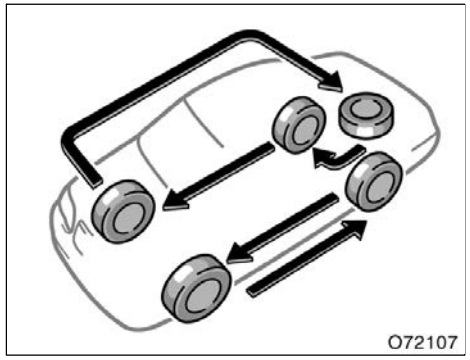


**With a spare tire of the same wheel type as the installed tires**

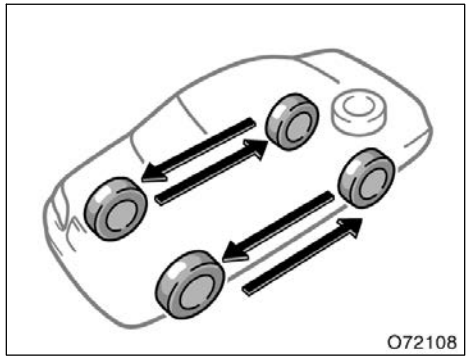


**With a spare tire of different wheel type from the installed tires**

**To equalize the wear and help extend tire life, Toyota recommends that you rotate your tires according to the maintenance schedule. (For scheduled maintenance information, please refer to the "Scheduled Maintenance Guide" or "Owner's Manual Supplement".) However, the most appropriate timing for tire rotation may vary according to your driving habits and road surface conditions.**

See "If you have a flat tire" on page 320 in Section 4 for tire change procedure.

When rotating tires, check for uneven wear and damage. Abnormal wear is usually caused by incorrect tire pressure, improper wheel alignment, out–of–balance wheels, or severe braking.

**⚠ CAUTION**

**Do not include a compact spare tire when rotating the tires. It is designed for temporary use only.**

**Initial adjustment of the tire pressure warning system is necessary after you have rotated your tires. See "Tire pressure warning system" on page 169 in Section 1–7.**

## Installing snow tires and chains

### WHEN TO USE SNOW TIRES OR CHAINS

**Snow tires or chains are recommended when driving on snow or ice.**

On wet or dry roads, conventional tires provide better traction than snow tires.

### SNOW TIRE SELECTION

**If you need snow tires, select tires of the same size, construction and load capacity as the originally installed tires.**

Do not use tires other than those mentioned above. Do not install studded tires without first checking local regulations for possible restrictions.

**⚠ CAUTION**

**Do not use snow tires other than the manufacturer's recommended size, as this may cause dangerous handling characteristics resulting in loss of control. Otherwise, an accident may occur resulting in death or serious injuries.**

### SNOW TIRE INSTALLATION

**Snow tires should be installed on all wheels.**

Installing snow tires on the front wheels only can lead to an excessive difference in road grip capability between the front and rear tires which could cause loss of vehicle control.

When storing removed tires, you should store them in a cool dry place.

Mark the direction of rotation and be sure to install them in the same direction when replacing.

**⚠ CAUTION**

- **Do not drive with the snow tires incorrectly inflated.**
- **Never drive over 120 km/h (75 mph) with any type of snow tires.**

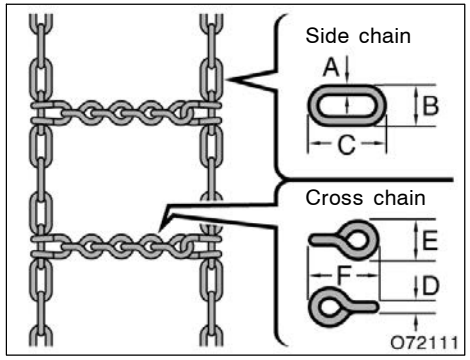


### TIRE CHAIN SELECTION

**Use the tire chains of correct size.**

For P215/60R16 and P215/55R17 tires, use the following type chains.

| | | mm (in.) |
|---|---|---|
| A | Diameter of side chain | 3 (0.12) |
| B | Width of side chain | 10 (0.39) |
| C | Length of side chain | 30 (1.18) |
| D | Diameter of cross chain | 4 (0.16) |
| E | Width of cross chain | 14 (0.55) |
| F | Length of cross chain | 25 (0.98) |

**Regulations regarding the use of tire chains vary according to location or type of road, so always check local regulations before installing chains.**

***NOTICE***

***If the wrong combination of tire and chain is used, the chains could damage the vehicle body.***

CHAIN INSTALLATION

**Install the chains on the front tires as tightly as possible. Do not use tire chains on the rear tires. Retighten chains after driving 0.5—1.0 km (1/4—1/2 mile).**

When installing chains on your tires, carefully follow the instructions of the chain manufacturer.

If wheel covers are used, they will be scratched by the chain band, so remove the covers before putting on the chains.

**CAUTION**

- **Do not exceed 50 km/h (30 mph) or the chain manufacturer's recommended speed limit, whichever is lower.**
- **Drive carefully avoiding bumps, holes, and sharp turns, which may cause the vehicle to bounce.**
- **Avoid sharp turns or locked–wheel braking, as use of chains may adversely affect vehicle handling.**
- **When driving with chains installed, be sure to drive carefully. Slow down before entering curves to avoid losing control of the vehicle. Otherwise an accident may occur.**

***NOTICE***

***Do not attempt to use a tire chain on the compact spare tire, as it may result in damage to the vehicle as well as the tire.***

## Replacing wheels

WHEN TO REPLACE YOUR WHEELS

**If you have wheel damage such as bending, cracks or heavy corrosion, the wheel should be replaced.**

If you fail to replace a damaged wheel, the tire may slip off the wheel or cause loss of handling control.

WHEEL SELECTION

**When replacing wheels, care should be taken to ensure that the wheels are replaced by ones with the same load capacity, diameter, rim width, and offset.**

This must be observed on compact spare tires, too.

Correct replacement wheels are available at your Toyota dealer.

A wheel of a different size or type may adversely affect handling, wheel and bearing life, brake cooling, speedometer/odometer calibration, stopping ability, headlight aim, bumper height, vehicle ground clearance, and tire or snow chain clearance to the body and chassis.

Replacement with used wheels is not recommended as they may have been subjected to rough treatment or high mileage and could fail without warning. Also, bent wheels which have been straightened may have structural damage and therefore should not be used. Never use an inner tube in a leaking wheel which is designed for a tubeless tire.

**⚠ CAUTION**

**Do not use wheels other than the manufacturer's recommended size, as this may cause dangerous handling characteristics resulting in loss of control. Otherwise, an accident may occur resulting in death or serious injuries.**

**Initial adjustment of the tire pressure warning system is necessary after you have replaced your wheels. See "Tire pressure warning system" on page 169 in Section 1–7.**

## Aluminum wheel precautions

- When installing aluminum wheels, check that the wheel nuts are tight after driving your vehicle the first 1600 km (1000 miles).
- If you have rotated, repaired, or changed your tires, check that the wheel nuts are still tight after driving 1600 km (1000 miles).
- When using tire chains, be careful not to damage the aluminum wheels.
- Use only Toyota wheel nuts and wrench designed for your aluminum wheels.
- When balancing your wheels, use only Toyota balance weights or equivalent and a plastic or rubber hammer.
- As with any wheel, periodically check your aluminum wheels for damage. If damaged, replace immediately.

# SECTION 7 – 3

## DO–IT–YOURSELF MAINTENANCE

### Electrical components


Checking battery condition . . . . . 372
Battery recharging precautions . . . . . 373
Checking and replacing fuses . . . . . 374
Replacing the wiper blades . . . . . 375
Adding washer fluid . . . . . 375
Checking the headlight aim . . . . . 376
Replacing light bulbs . . . . . 377

## Checking battery condition——Precautions

**⚠ CAUTION**

**BATTERY PRECAUTIONS**

**The battery produces flammable and explosive hydrogen gas.**

- **Do not cause a spark from the battery with tools.**
- **Do not smoke or light a match near the battery.**

**The electrolyte contains poisonous and corrosive sulfuric acid.**

- **Avoid contact with eyes, skin or clothes.**
- **Never ingest electrolyte.**
- **Wear protective safety glasses when working near the battery.**
- **Keep children away from the battery.**

**EMERGENCY MEASURES**

- **If electrolyte gets in your eyes, flush your eyes with clean water immediately and get immediate medical attention. If possible, continue to apply water with a sponge or cloth while en route to the medical office.**
- **If electrolyte gets on your skin, thoroughly wash the contact area. If you feel pain or burning, get medical attention immediately.**
- **If electrolyte gets on your clothes, there is a possibility of its soaking through to your skin, so immediately take off the exposed clothing and follow the procedure above, if necessary.**
- **If you accidentally swallow electrolyte, drink a large quantity of water or milk. Follow with milk of magnesia, beaten raw egg or vegetable oil. Then go immediately for emergency help.**

## —Checking battery exterior

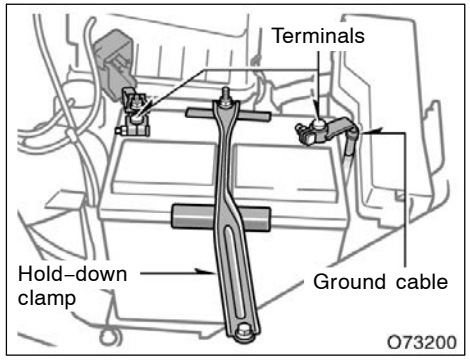


**Check the battery for corroded or loose terminal connections, cracks, or loose hold–down clamp.**

a. If the battery is corroded, wash it off with a solution of warm water and baking soda. Coat the outside of the terminals with grease to prevent further corrosion.

b. If the terminal connections are loose, tighten their clamp nuts—but do not overtighten.

c. Tighten the hold–down clamp only enough to keep the battery firmly in place. Overtightening may damage the battery case.

**NOTICE**

- ***Be sure the engine and all accessories are off before performing maintenance.***
- ***When checking the battery, remove the ground cable from the negative terminal ("–" mark) first and reinstall it last.***
- ***Be careful not to cause a short circuit with tools.***
- ***Take care no solution gets into the battery when washing it.***

**If the battery is disconnected or run down,** the power window and moon roof may not operate automatically and the jam protection function will not function correctly after you reconnect, replace or recharge the battery. In any of these cases, you should normalize each system. To normalize them, see "Power windows" on page 41 and "Electric moon roof" on page 52 in Section 1–2.

## —Checking battery condition

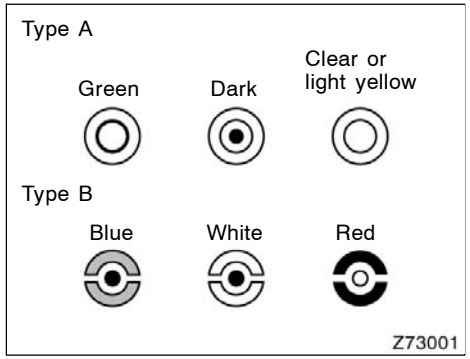


### CHECKING BY INDICATOR

**Check the battery condition by the indicator color.**

| Indicator color | | Condition |
|---|---|---|
| Type A | Type B | |
| Green | Blue | Good |
| Dark | White | Charging necessary. Have battery checked by your Toyota dealer. |
| Clear or light yellow | Red | Have battery checked by your Toyota dealer. |

## Battery recharging precautions

**During recharging, the battery is producing hydrogen gas.**

Therefore, before recharging:

1. If recharging with the battery installed on the vehicle, be sure to disconnect the ground cable.
2. Be sure the power switch on the recharger is off when connecting the charger cables to the battery and when disconnecting them.

**⚠ CAUTION**

- **Always charge the battery in an unconfined area. Do not charge the battery in a garage or closed room where there is not sufficient ventilation.**
- **Only do a slow charge (5 A or less). Charging at a quicker rate is dangerous. The battery may explode, causing personal injuries.**

**NOTICE**

***Never recharge the battery while the engine is running. Also, be sure all accessories are turned off.***

## Checking and replacing fuses

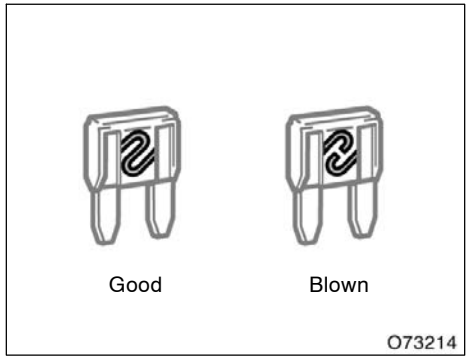


**Type A**

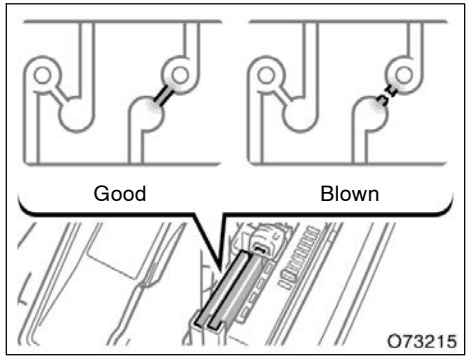


**Type B**

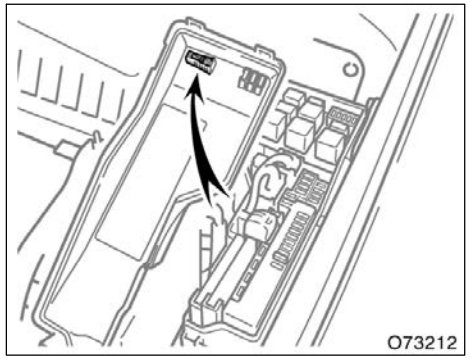


**If the headlights or other electrical components do not work, check the fuses. If any of the fuses are blown, they must be replaced.**

See “Fuse locations” on page 349 in Section 7–1 for locations of the fuses.

**Turn the ignition switch and inoperative component off. Pull the suspected fuse straight out and check it.**

Determine which fuse may be causing the problem. The lid of the fuse box shows the name of the circuit for each fuse. See page 387 in Section 8 for the functions controlled by each circuit.

Type B fuses—When any of the fuses are blown, contact your Toyota dealer.

Type A fuses can be pulled out by the pull–out tool. The location of the pull–out tool is shown in the illustration.

If you are not sure whether the fuse has blown, try replacing the suspected fuse with one that you know is good.

**If the fuse has blown, push a new fuse into the clip.**

Only install a fuse with the amperage rating designated on the fuse box lid.

If you do not have a spare fuse, in an emergency you can pull out the “MIR HTR”, “CIG” or “A/C” fuse, which may be dispensable for normal driving, and use it if its amperage rating is the same.

If you cannot use one of the same amperage, use one that is lower, but as close to the rating as possible. If the amperage is lower than that specified, the fuse might blow out again but this does not indicate anything wrong. Be sure to get the correct fuse as soon as possible and return the substitute to its original clip.

It is a good idea to purchase a set of spare fuses and keep them in your vehicle for emergencies.

If the new fuse immediately blows out, there is a problem with the electrical system. Have your Toyota dealer correct it as soon as possible.

You should normalize the power window and moon roof if they do not operate automatically or the jam protection function does not operate correctly after replacing blown fuses. To normalize the power window and moon roof, see “Power windows” on page 41 and “Electric moon roof” on page 52 in Section 1–2.

**⚠ CAUTION**

**Never use a fuse with a higher amperage rating, or any other object, in place of a fuse. This may cause extensive damage and possibly a fire.**

## Replacing the wiper blades

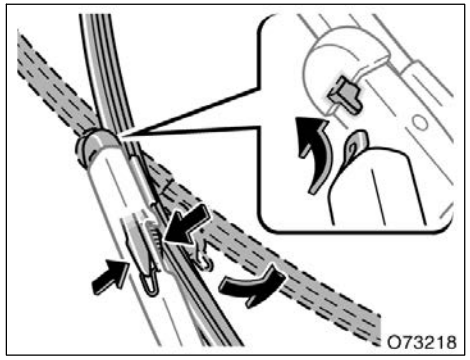


**When the wipers no longer clean adequately, the wiper blades may be worn or cracked, requiring replacement.**

To remove the wiper blade from the arm, pull the blade in the direction of the arrow while squeezing the clip.

***NOTICE***

***Be careful not to scratch the glass surface with the wiper frame.***

## Adding washer fluid

**If any washer does not work, the low windshield washer fluid level warning light comes on, the washer tank may be empty. Add washer fluid.**

You may use plain water as washer fluid. However, in cold areas where temperatures range below the freezing point, use washer fluid containing antifreeze. This product is available at your Toyota dealer and most auto parts stores. Follow the manufacturer’s directions for how much to mix with water.

***NOTICE***

***Do not use engine antifreeze or any other substitute because it may damage your vehicle’s paint.***

## Checking the headlight aim (with discharge headlight)—

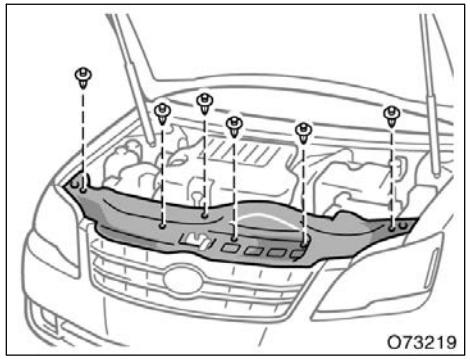


**Remove the cover clips with a Phillips–head screwdriver and remove the covers.**

Remove and install the cover clip and cover as shown in the following illustrations.

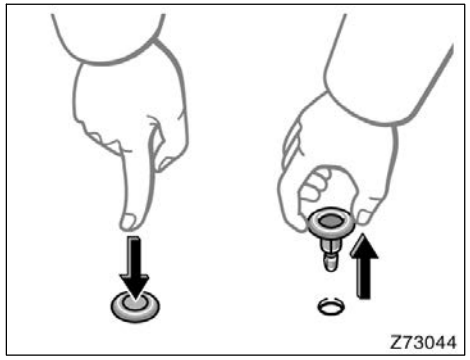


**Removing clip**

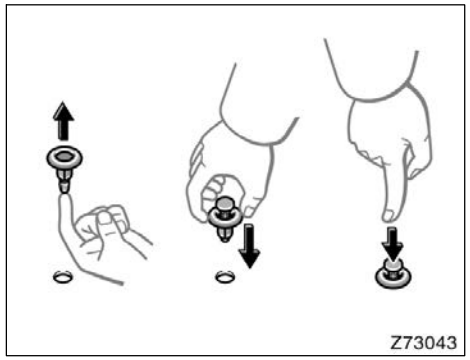


**Installing clip**

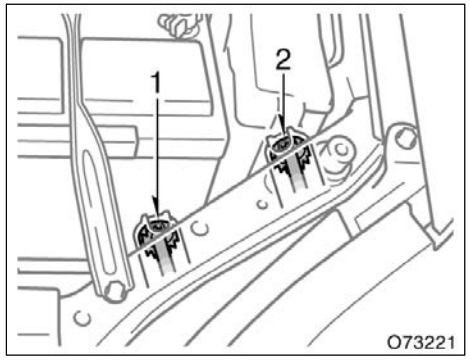


**1: Vertical movement adjusting bolt 1**
**2: Vertical movement adjusting bolt 2**

Before checking the headlight aim:

1. Be sure that the body around the headlight is not deformed.
2. Park the vehicle on a level spot.
3. The driver gets into the driver's seat and puts the vehicle in a state readying for a driving (with a full tank).
4. Bounce the vehicle several times.

## —Adjusting the vertical aiming

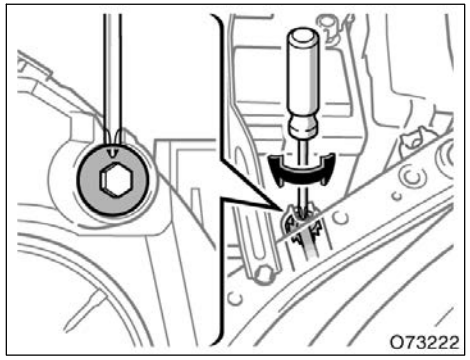


1. Turn the vertical movement adjusting bolt 1 in either direction using a Phillips–head screwdriver. At this time, keep the turning direction and number of turns in mind.

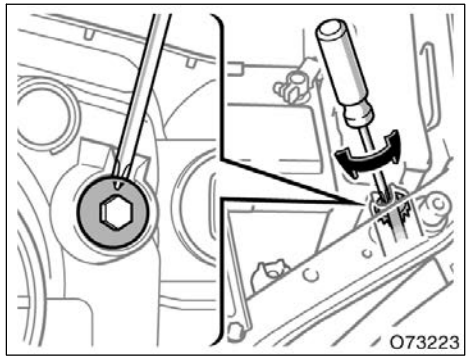


2. Turn the vertical movement adjusting bolt 2 the same number of turns and in the same direction as step 1 using a Phillips–head screwdriver.

## Replacing light bulbs—

The following illustrations show how to gain access to the bulbs. When replacing a bulb, make sure the ignition switch and light switch are off. Use bulbs with the wattage ratings given in the table.

The high mounted stoplight consists of a number of LEDs. If any of the LEDs burn out, take your vehicle to your Toyota dealer to have the light replaced.

**⚠ CAUTION**

- **To prevent burning yourself, do not replace the light bulbs while they are hot.**
- **Halogen bulbs have pressurized gas inside and require special handling. They can burst or shatter if scratched or dropped. Hold a bulb only by its plastic or metal case. Do not touch the glass part of a bulb with bare hands.**

**Vehicles with discharge headlights—**

- **Do not touch the high–intensity discharge headlight's high voltage socket when the headlights are turned on. An extremely high voltage of 20000 V will be discharged and could result in serious injury or death by electric shock.**
- **Do not attempt to take apart or repair the low beam headlight bulbs, connectors, power supply circuits, or related components. Doing so could result in electric shock and serious injury or death. Call your Toyota dealer for headlight repair or servicing, including replacement of bulbs and bulb disposal.**

***NOTICE***

***Only use a bulb of the listed type.***

The inside of the lens of exterior lights such as headlights may temporarily fog up when the lens becomes wet in the rain or in a car wash. This is not a problem because the fogging is caused by the temperature difference between the outside and inside of the lens, just like the windshield fogs up in the rain. However, if there is a large drop of water on the inside of the lens, or if there is water pooled inside the light, contact your Toyota dealer.

| Light bulbs | Bulb No. | W | Type |
|---|---|---|---|
| Headlights (low) | | | |
| Discharge bulbs | D2R | 35 | A |
| Halogen bulbs | 9006 | 51 | B |
| Headlights (high) | 9005 | 60 | C |
| Front fog lights | 9006 | 51 | B |
| Front turn signal/parking lights | 3457A | 27/7 | D |
| Front side marker lights | W5W | 5 | E |
| Rear turn signal lights | 469 | 21 | D |
| Stop/tail lights | 7443 | 21/5 | E |
| Rear side marker lights | 194 | 3.8 | E |
| Tail lights | 194 | 3.8 | E |
| Back–up lights | 921 | 16 | E |
| License plate lights | 194 | 3.8 | E |
| Interior light | W5W | 5 | E |

| Light bulbs | Bulb No. | W | Type |
|---|---|---|---|
| Front personal lights | W5W | 5 | E |
| Rear personal lights | W5W | 5 | E |
| Vanity lights | 7065 | 1.4 | F |
| Glove box light | 74 | 1.2 | E |
| Door courtesy lights | 168 | 5 | E |
| Trunk light | 2825 | 4.8 | E |

A: D2R discharge bulbs
B: HB4 halogen bulbs
C: HB3 halogen bulbs
D: Wedge base bulbs (amber)
E: Wedge base bulbs (clear)
F: Double end bulbs

### —Headlights, front fog, front turn signal/parking, front side marker, tail and back–up lights, and LED* type high mounted stoplight

**If either the left or right headlights, front fog, front turn signal/parking, front side marker, tail or back–up lights, or LED* type high mounted stoplight burns out, contact your Toyota dealer.**

**NOTICE**

***Do not try to replace the headlights, front fog, front turn signal/parking, front side marker, tail or back–up light bulbs by yourself. You may damage the vehicle.***

*: Light–emitting Diode

### —Rear turn signal, stop/tail and rear side marker lights

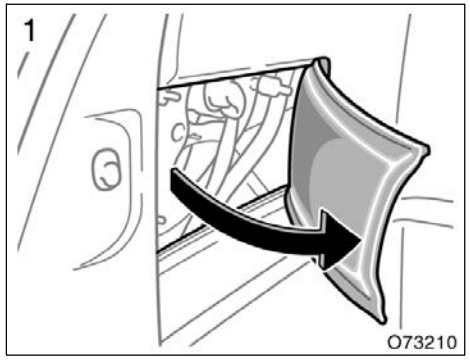


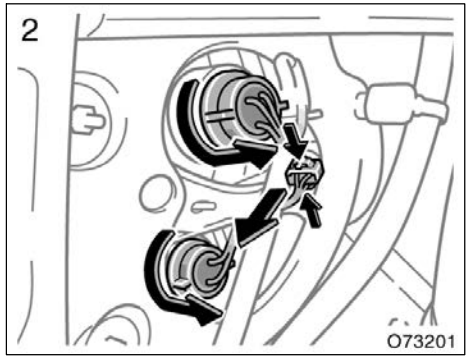

## —License plate lights

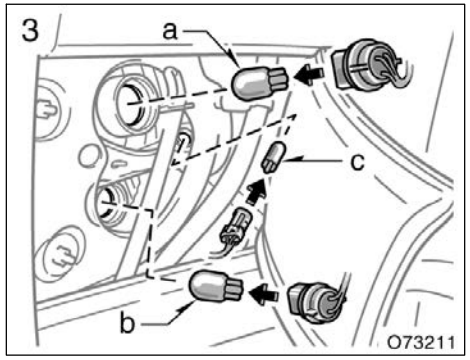


**a: Rear turn signal light**
**b: Stop/tail light**
**c: Rear side marker light**

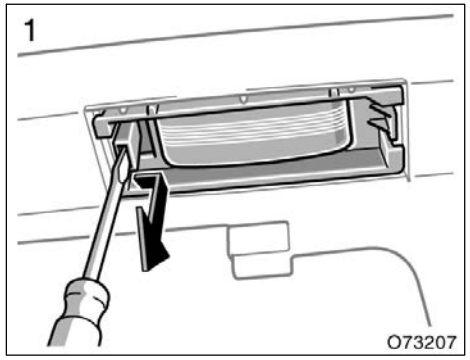


**Use a flathead screwdriver.**

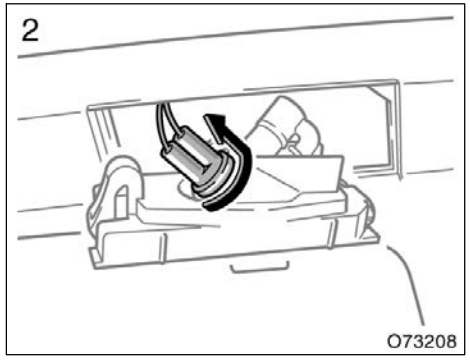


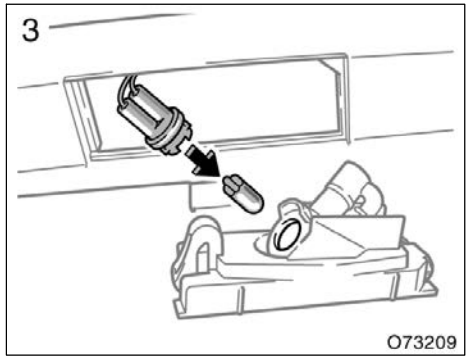

# SECTION 8

# SPECIFICATIONS

## Specifications

Dimensions and weights . . . . . 382
Engine . . . . . 382
Fuel . . . . . 383
Service specifications . . . . . 383
Tires . . . . . 386
Fuses . . . . . 387

## Dimensions and weights

| | | |
|---|---|---|
| Overall length | mm (in.) | 5010 (197.2) |
| Overall width | mm (in.) | 1850 (72.8) |
| Overall height* | mm (in.) | 1485 (58.5) |
| Wheelbase | mm (in.) | 2820 (111.0) |
| Front tread | mm (in.) | 1581 (62.2) |
| Rear tread | mm (in.) | 1570 (61.8) |
| Vehicle capacity weight (occupants + luggage) | kg (lb.) | 395 (870) |
| Towing capacity (trailer weight + cargo weight) | kg (lb.) | 454 (1000) |

*: Unladen vehicle

## Engine

Model:
3.5 L V6 (2GR–FE)

Type:
6 cylinder V type 4 cycle, gasoline

Bore and stroke, mm (in.):
94.0 × 83.0 (3.70 × 3.27)

Displacement, $cm^3$ (cu. in.):
3456 (210.9)

## Fuel

Fuel type:
Unleaded gasoline, Octane Rating 87 (Research Octane Number 91) or higher.

Fuel tank capacity, L (gal., Imp. gal.):
70 (18.5, 15.4)

## Service specifications

### ENGINE

Spark plug type:
DENSO FK20HR11

Spark plug gap, mm (in.):
1.1 (0.043)

**NOTICE**

***Use only above spark plugs. Do not adjust gaps for engine performance or smooth driveability.***

### ENGINE LUBRICATION

Oil capacity (drain and refill), L (qt., Imp. qt.):

| | |
|---|---|
| With filter | 6.1 (6.4, 5.4) |
| Without filter | 5.7 (6.0, 5.0) |

"Toyota Genuine Motor Oil" is used in your Toyota vehicle. Use Toyota approved "Toyota Genuine Motor Oil" or equivalent to satisfy the following grade and viscosity.

Oil grade:
ILSAC multigrade engine oil.

Recommended oil viscosity:
SAE 5W–30

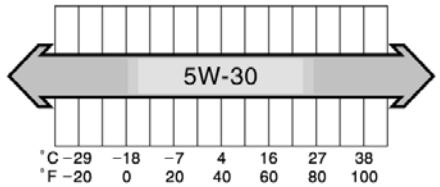


Outside temperature

OIL008

Please contact your Toyota dealer for further details.

**COOLING SYSTEM**

Total capacity, L (qt., Imp. qt.):
8.3 (8.8, 7.3)

Coolant type:

"Toyota Super Long Life Coolant" is used in your Toyota vehicle at factory fill. In order to avoid technical problems, only use "Toyota Super Long Life Coolant" or similar high quality ethylene glycol based non–silicate, non–amine, non–nitrite, and non–borate coolant with long–life hybrid organic acid technology. (Coolant with long–life hybrid organic acid technology is a combination of low phosphates and organic acids.)

Do not use plain water alone.

Please contact your Toyota dealer for further details.

**BATTERY**

Open voltage* at 20°C (68°F):

| | |
|---|---|
| 12.6—12.8 V | Fully charged |
| 12.2—12.4 V | Half charged |
| 11.8—12.0 V | Discharged |

*: Voltage that is checked 20 minutes after the key is removed (vehicles with key cylinder–type ignition switch) or the engine is turned off (vehicles with smart key system) with all the lights turned off.

Charging rates:
5 A max.

**AUTOMATIC TRANSAXLE**

Fluid capacity (drain and refill), L (qt., Imp. qt.):
Up to 3.5 (3.7, 3.1)

Fluid type:
Toyota Genuine ATF WS

Change automatic transmission fluid only as necessary.

Generally, it is necessary to change automatic transmission fluid only if your vehicle is driven under one of the Special Operating Conditions listed in your "Scheduled Maintenance Guide" or "Owner's Manual Supplement". When changing the automatic transmission fluid, use only "Toyota Genuine ATF WS" (ATF JWS3324 or NWS9638) to aid in assuring maximum transaxle performance.

**Notice: Using automatic transmission fluid other than "Toyota Genuine ATF WS" may cause deterioration in shift quality, locking up of your transmission accompanied by vibration, and ultimately damage the automatic transmission of your vehicle.**

Please contact your Toyota dealer for further details.

**BRAKES**

Minimum pedal clearance when depressed with the force of 490 N (50 kgf, 110 lbf) with the engine running, mm (in.):
77 (3.0)

Pedal free play, mm (in.):
1—6 (0.04—0.24)

Pad wear limit, mm (in.):
1.0 (0.04)

Lining wear limit, mm (in.):
1.0 (0.04)

Parking brake adjustment when depressed with the force of 294 N (30 kgf, 66.1 lbf):
9—11 clicks

Fluid type:
SAE J1703 or FMVSS No.116 DOT 3

**STEERING**

Wheel free play:
Less than 30 mm (1.2 in.)

Power steering fluid type:
Automatic transmission fluid DEXRON®II or III

## Tires

**Tire size and cold tire inflation pressure:**

Front and rear

kPa (kgf/cm$^2$ or bar, psi)

| Tire size | Tire inflation pressure | | Wheel size |
|---|---|---|---|
| | Under 160 km/h (99 mph) | Over 160 km/h (99 mph) | |
| P215/60R16 94V | 200 (2.0, 29) | 240 (2.4, 35) | 16 × 6 1/2JJ |
| P215/55R17 93V | 220 (2.2, 32) | 260 (2.6, 38) | 17 × 7JJ |

When driving under the above vehicle load conditions at sustained high speeds above 160 km/h (100 mph), in countries where such speeds are permitted by–law, inflate the front and rear tires to 280 kPa (2.8 kgf/cm$^2$ or bar, 41 psi) provided that it does not exceed the maximum cold tire pressure molded on the tire sidewall.

Spare

kPa (kgf/cm$^2$ or bar, psi)

| Tire size | Tire inflation pressure | Wheel size |
|---|---|---|
| P215/60R16 94V | 200 (2.0, 29) | 16 × 6 1/2JJ |
| P215/55R17 93V | 220 (2.2, 32) | 17 × 7JJ |
| T155/70R17 110M | 420 (4.2, 60) | 17 × 4T |

**Wheel nut torque, N·m (kgf·m, ft·lbf):**

103 (10.5, 76)

NOTE: For complete information on tires (e.g. replacing tires or replacing wheels), see “Checking tire inflation pressure” through “Aluminum wheel precautions” on pages 361 through 369 in Section 7–2.

## Fuses

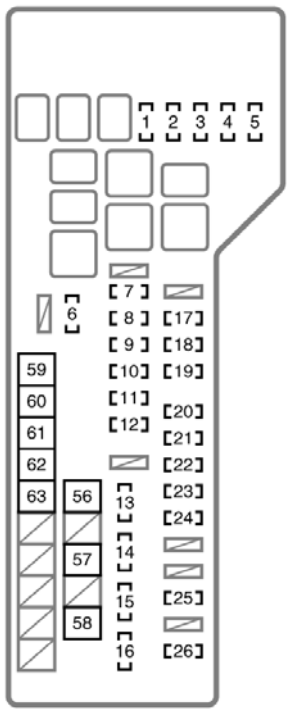


**Engine compartment**

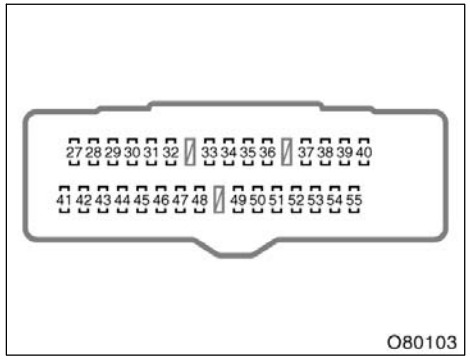


**Instrument panel**

**Fuses (type A)**

1. **EFI NO.2 10 A:** Multiport fuel injection system/sequential multiport fuel injection system
2. **STOP NO.2 7.5 A:** Stop lights, high mounted stoplight, vehicle stability control system, anti–lock brake system
3. **RADAR CC 7.5 A:** Vehicle stability control system
4. **HEAD RH LWR 15 A:** Right–hand headlight (low beam)
5. **HEAD LH LWR 15 A:** Left–hand headlight (low beam)
6. **INJ 15 A:** Multiport fuel injection system/sequential multiport fuel injection system
7. **STOP NO.1 15 A:** Multiplex communication system
8. **STR LOCK 25 A:** Steering lock system
9. **IMMOBI 7.5 A:** Smart key system
10. **AMP 30 A:** Audio system
11. **TURN/HAZ 15 A:** Turn signal lights
12. **IG2 25 A:** Multiport fuel injection system/sequential multiport fuel injection system
13. **ETCS 10 A:** Multiport fuel injection system/sequential multiport fuel injection system
14. **ALT–S 7.5 A:** Charging system
15. **DOOR NO.1 25 A:** Multiplex communication system
16. **AM2 7.5 A:** Starter system
17. **RAD NO.1 15 A:** Audio system, center display, navigation system
18. **ECU–B 10 A:** Center display, multiplex communication system

19. **DOME 7.5 A:** Gauges and meters, clock, front personal lights, door courtesy lights, garage door opener, rear personal lights, trunk light
20. **S–HORN 7.5 A:** Horn
21. **WASHER 20 A:** Windshield washer
22. **A/F 25 A:** Air fuel ratio sensor
23. **HEAD RH UPR 15 A:** Right–hand headlight (high beam)
24. **HEAD LH UPR 15 A:** Left–hand headlight (high beam)
25. **HORN 10 A:** Horn
26. **EFI NO.1 25 A:** Multiport fuel injection system/sequential multiport fuel injection system, fuel pump
27. **RR DOOR 25 A:** Power window (for rear right passenger)
28. **RL DOOR 25 A:** Power window (for rear left passenger)
29. **FR DOOR 25 A:** Power window (front passenger), driving position memory system
30. **FOG 15 A:** Front fog lights
31. **OBD 7.5 A:** On–board diagnosis system
32. **MPX–B 7.5 A:** Multiplex communication system
33. **P/W 25 A:** Power window, driving position memory system
34. **FUEL OPN 7.5 A:** Fuel filler door opener
35. **AM1 7.5 A:** Multiport fuel injection system/sequential multiport fuel injection system, starting system, ignition system
36. **A/C 7.5 A:** Air conditioning system
37. **DOOR NO.2 25 A:** Multiplex communication system
38. **S/ROOF 30 A:** Electric moon roof
39. **TAIL 10 A:** Parking lights, license plate lights, tail lights, front and rear side marker lights
40. **PANEL 7.5 A:** Seat heaters, navigation system, emergency flasher, electronically controlled automatic transmission system, glove box light, instrument panel lights, power outlets
41. **ECU IG NO.1 10 A:** Center display, shift lock control system, electric moon roof, multiplex communication system
42. **ECU IG NO.2 10 A:** Anti–lock brake system, dynamic laser cruise control system, automatic headlight leveling system, vehicle stability control system, multiplex communication system
43. **HTR 7.5 A:** Air conditioning system, instrument panel lights, electric cooling fan
44. **A/C COMP 7.5 A:** Air conditioning system
45. **S–HTR 20 A:** Air conditioning system
46. **GAUGE NO.1 10 A:** Back–up lights, navigation system, emergency flashers
47. **WIP 30 A:** Windshield wipers
48. **RR S/SHADE 10 A:** Rear electric sunshade
49. **IGN 10 A:** Multiport fuel injection system/sequential multiport fuel injection system, SRS airbag system, front passenger occupant classification system, smart key system, starter system
50. **GAUGE NO.2 7.5 A:** Gauges and meters, center display
51. **ECU–ACC 7.5 A:** Power rear view mirrors, center display, shift lock system, multiplex communication system
52. **CIG 15 A:** Cigarette lighter
53. **PWR OUTLET 15 A:** Power outlets
54. **RADIO NO.2 7.5 A:** Audio system, navigation system
55. **MIR HTR 10 A:** Outside rear view mirror defoggers

**Fuses (type B)**

56. **ALT 120 A (vehicles without compass)/140 A (vehicles with compass):** Charging system, “RR DEF”, “ABS/VSC NO.2” “HEATER”, “ABS/VSC NO.1”, “RDI FAN”, “WASHER” and “S–HORN” fuses
57. **MAIN 40 A:** Headlights
58. **ST/AM2 30 A:** Starter system
59. **HEATER 50 A:** Air conditioning system
60. **ABS/VSC NO.1 50 A:** Anti–lock brake system, vehicle stability control system
61. **RDI FAN 50 A:** Electric cooling fan
62. **ABS/VSC NO.2 30 A:** Anti–lock brake system, vehicle stability control system
63. **RR DEF 50 A:** Rear windshield defogger, outside rear view mirror defoggers

# SECTION 9

## REPORTING SAFETY DEFECTS FOR U.S. OWNERS

### Reporting safety defects for u.s. owners

Reporting safety defects for U.S. owners . . . . . 392

## Reporting safety defects for U.S. owners

If you believe that your vehicle has a defect which could cause a crash or could cause injury or death, you should immediately inform the National Highway Traffic Safety Administration (NHTSA) in addition to notifying Toyota Motor Sales, U.S.A., Inc.
(Toll–free: 1–800–331–4331).

If NHTSA receives similar complaints, it may open an investigation, and if it finds that a safety defect exists in a group of vehicles, it may order a recall and remedy campaign. However, NHTSA cannot become involved in individual problems between you, your dealer, or Toyota Motor Sales, U.S.A., Inc.

To contact NHTSA, you may call the Vehicle Safety Hotline toll–free at 1–888–327–4236 (TTY: 1–800–424–9153); go to *http://www.safercar.gov*; or write to: Administrator, NHTSA, 400 Seventh Street, SW., Washington, DC 20590. You can also obtain other information about motor vehicle safety from *http://www.safercar.gov*.

## WE REALLY CARE ABOUT YOU — PLEASE BUCKLE UP

**Toyota has made a special effort to encourage use of seat belts.**

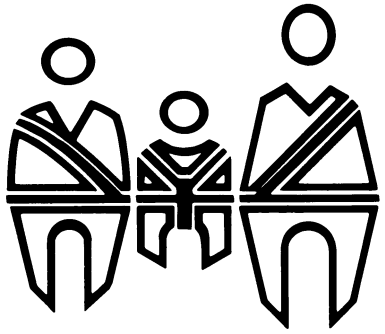

**Toyota belts are:**

- **Comfortable**
- **Easy to use**
- **Convenient**

**We encourage you to use your belts every time you drive.**

**You should know as much about the quality and importance of proper maintenance of your new vehicle as the people who built it.**

**The Toyota authorized Repair Manual tells you how to maintain your vehicle and enables you to correctly perform your own maintenance.**

The best way to keep your new vehicle in top running order is to maintain it properly from the moment you drive it off the showroom floor.

The Toyota authorized Repair Manual is packed with literally everything you need to know to perform your own maintenance in virtually every area of your new vehicle.

# Maintenance procedures for the engine, chassis, body, electrical system, and more, are clearly explained and illustrated.

### Periodic maintenance and tune–up

Periodic maintenance and tune–up helps to prevent small problems from growing into larger ones later on. The repair manual outlines exactly what maintenance is required and clearly explains how to do the work yourself step–by–step.

Areas covered include such things as spark plug replacement, valve clearance adjustment and engine oil and filter replacement.

## Where to obtain the Repair Manual

The repair manual for AVALON may be purchased from any Toyota dealer or the Material Distribution Center. To purchase the repair manual, please contact your Toyota dealer or call the Material Distribution Center toll–free at 1–800–622–2033.

# aU–3

## Quick index


- If a service reminder indicator or warning buzzer comes on ..... 145
- If your vehicle will not start ..... 314
- If your engine stalls while driving ..... 318
- If your vehicle overheats ..... 319
- If you have a flat tire ..... 320
- If your vehicle needs to be towed ..... 330
- Tips for driving during break–in period ..... 266
- How to start the engine ..... 296
- General maintenance ..... 343
- Complete index ..... NO TAG


## Gas station information

**Fuel type:**

UNLEADED gasoline, Octane Rating 87 (Research Octane Number 91) or higher. For improved vehicle performance, use premium unleaded gasoline with an Octane Rating of 91 (Research Octane Number 96) or higher.

See page 266 for detailed information.

**Fuel tank capacity:**
70 L (18.5 gal., 15.4 Imp. gal.)

**Engine oil:**
ILSAC multigrade engine oil is recommended.

See page 357 for detailed information.

**Tire information:** See pages 361 through 369.

**Tire inflation pressure:** See page 386.


**Publication No. OM41418U**
**Part No. 01999-41418**
Printed in Japan 01–0608–00 Z
¿¿¿¿ **(¿¿U)**