Jeep®

2017 Cherokee

OWNER'S MANUAL

VEHICLES SOLD IN CANADA

With respect to any Vehicles Sold in Canada, the name FCA US LLC shall be deemed to be deleted and the name FCA Canada Inc. used in substitution therefore.

DRIVING AND ALCOHOL

Drunken driving is one of the most frequent causes of accidents.

Your driving ability can be seriously impaired with blood alcohol levels far below the legal minimum. If you are drinking, don't drive. Ride with a designated non-drinking driver, call a cab, a friend, or use public transportation.

WARNING!
Driving after drinking can lead to an accident. Your perceptions are less sharp, your reflexes are slower, and your judgment is impaired when you have been drinking. Never drink and then drive.

This manual illustrates and describes the operation of features and equipment that are either standard or optional on this vehicle. This manual may also include a description of features and equipment that are no longer available or were not ordered on this vehicle. Please disregard any features and equipment described in this manual that are not on this vehicle.

FCA US LLC reserves the right to make changes in design and specifications, and/or make additions to or improvements to its products without imposing any obligation upon itself to install them on products previously manufactured.

Copyright © 2016 FCA US LLC

TABLE OF CONTENTS

SECTION		PAGE
1	INTRODUCTION	3
2	GRAPHICAL TABLE OF CONTENTS	9
3	GETTING TO KNOW YOUR VEHICLE	15
4	GETTING TO KNOW YOUR INSTRUMENT PANEL	125
5	SAFETY	169
6	STARTING AND OPERATING	255
7	IN CASE OF EMERGENCY	385
8	SERVICING AND MAINTENANCE	437
9	TECHNICAL SPECIFICATIONS	503
10	MULTIMEDIA	517
11	CUSTOMER ASSISTANCE	583
12	INDEX	589

INTRODUCTION

CONTENTS

■ INTRODUCTION 4
■ ROLLOVER WARNING 4
■ HOW TO USE THIS MANUAL 5
□ Essential Information 5
□ Symbols 6
■ WARNINGS AND CAUTIONS 7
■ VEHICLE MODIFICATIONS/ALTERATIONS 7

INTRODUCTION

Congratulations on selecting your new FCA US LLC vehicle. Be assured that it represents precision workmanship, distinctive styling, and high quality.

The two-wheel drive version of this vehicle was designed for on-road use only. It is not intended for off-road driving or use in other severe conditions suited for a four-wheel drive vehicle.

Before you start to drive this vehicle, read the Owner's Manual. Be sure you are familiar with all vehicle controls, particularly those used for braking, steering, transmission, and transfer case shifting. Learn how your vehicle handles on different road surfaces. Your driving skills will improve with experience. When driving off-road, or working the vehicle, don't overload the vehicle, or expect the vehicle to overcome the natural laws of physics.

Always observe federal, state, provincial, and local laws wherever you drive.

As with other vehicles of this type, failure to operate this vehicle correctly may result in loss of control or a collision. Refer to "Driving Tips" in "Starting And Operating" for further information.

This Owner's Manual has been prepared with the assistance of service and engineering specialists to acquaint you with the operation and maintenance of your vehicle. It is supplemented by Warranty Information, and various customer-oriented documents. Please take the time to read these publications carefully. Following the instructions and recommendations in this manual will help assure safe and enjoyable operation of your vehicle.

NOTE: After reviewing the owner information, it should be stored in the vehicle for convenient referencing and remain with the vehicle when sold.

When it comes to service, remember that your authorized dealer knows your Jeep® vehicle best, has factory-trained technicians and genuine MOPAR® parts, and cares about your satisfaction.

ROLLOVER WARNING

Utility vehicles have a significantly higher rollover rate than other types of vehicles. This vehicle has a higher ground clearance and a higher center of gravity than many passenger vehicles. It is capable of performing better in a wide variety of off-road applications. Driven in an unsafe manner, all vehicles can go out of control. Because of the

higher center of gravity, if this vehicle is out of control it may roll over while some other vehicles may not.

Do not attempt sharp turns, abrupt maneuvers, or other unsafe driving actions that can cause loss of vehicle control. Failure to operate this vehicle safely may result in a collision, rollover of the vehicle, and severe or fatal injury. Drive carefully.

80bfe0f0

Rollover Warning Label

Failure to use the driver and passenger seat belts provided is a major cause of severe or fatal injury. In fact, the U.S. government notes that the universal use of existing seat belts could cut the highway death toll by 10,000 or more each year and could reduce disabling injuries by two million annually. In a rollover crash, an unbelted person is significantly more likely to die than a person wearing a seat belt. Always buckle up.

HOW TO USE THIS MANUAL

Essential Information

Consult the Table of Contents to determine which section contains the information you desire.

Since the specification of your vehicle depends on the items of equipment ordered, certain descriptions and illustrations may differ from your vehicle's equipment.

The detailed index at the back of this Owner's Manual contains a complete listing of all subjects.

Symbols

Consult the following table for a description of the symbols that may be used on your vehicle or throughout this Owner's Manual:

WARNINGS AND CAUTIONS

This Owner's Manual contains **WARNINGS** against operating procedures that could result in a collision, bodily injury and/or death. It also contains **CAUTIONS** against procedures that could result in damage to your vehicle. If you do not read this entire Owner's Manual, you may miss important information. Observe all Warnings and Cautions.

VEHICLE MODIFICATIONS/ALTERATIONS

WARNING!
Any modifications or alterations to this vehicle could seriously affect its roadworthiness and safety and may lead to a collision resulting in serious injury or death.

GRAPHICAL TABLE OF CONTENTS

CONTENTS

- FRONT VIEW 10
- REAR VIEW. 11
- INSTRUMENT PANEL 12
- INTERIOR 13

FRONT VIEW

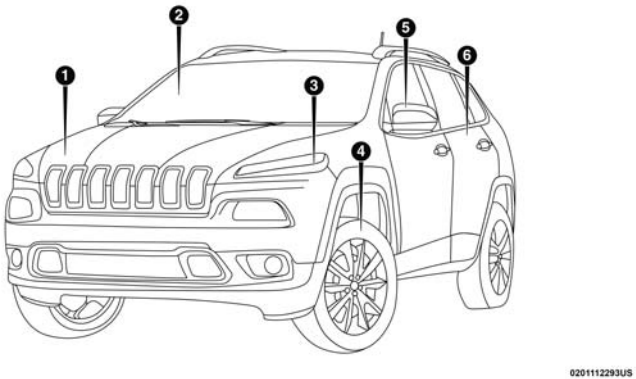

Front View

1 — Hood/Engine Compartment
2 — Windshield
3 — Daytime Running Lights
4 — Wheels/Tires
5 — Exterior Mirrors
6 — Doors

REAR VIEW

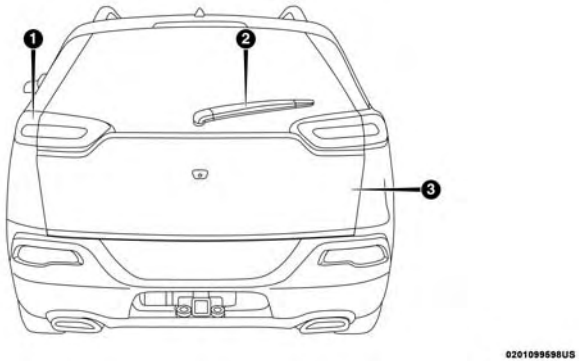

Rear View

1 — Rear Lights
2 — Rear Windshield Wiper
3 — Liftgate

INSTRUMENT PANEL

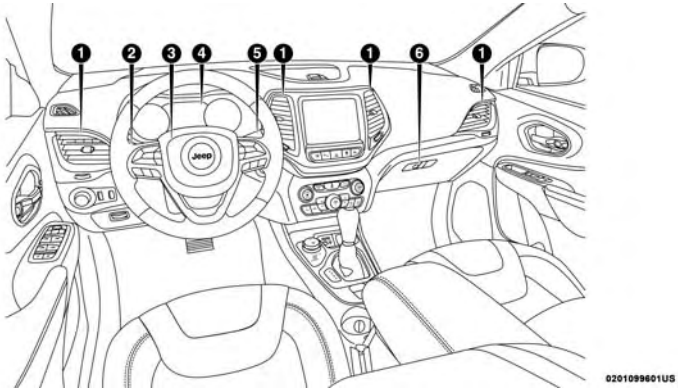

Instrument Panel

1 — Air Vents
2 — Multifunction Lever
3 — Steering Wheel
4 — Instrument Cluster
5 — Windshield Wiper Lever
6 — Glove Compartment

INTERIOR

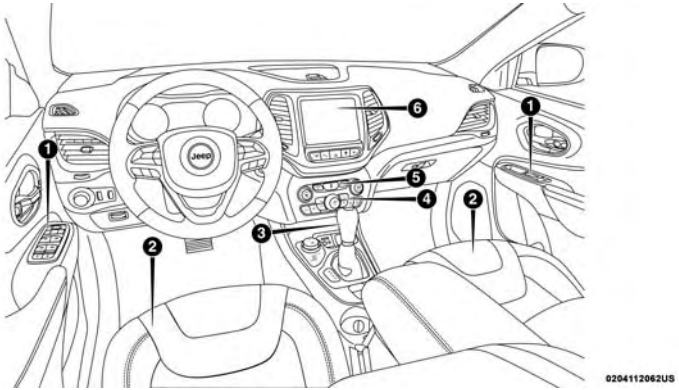

Interior Features

1 — Power Window Switches
2 — Seats
3 — Transmission Gear Selector
4 — Climate Controls
5 — Switch Panel
6 — Uconnect Radio

GETTING TO KNOW YOUR VEHICLE

CONTENTS

■ KEYS 19

□ Key Fob 19

■ IGNITION SWITCH 24

□ Keyless Enter-N-Go — Ignition 24

□ Vehicle On Message 26

■ REMOTE STARTING SYSTEM — IF EQUIPPED . . .27

□ How To Use Remote Start — If Equipped 27

□ Remote Start Abort Message On The Instrument Cluster Display — If Equipped 28

□ To Enter Remote Start Mode 29

□ To Exit Remote Start Mode Without Driving The Vehicle 29

□ To Exit Remote Start Mode And Drive The Vehicle 29

□ Remote Start Comfort Systems — If Equipped . . .30

□ Remote Start Windshield Wiper De–Icer Activation — If Equipped. 30

□ General Information 30

■ SENTRY KEY 31

□ Replacement Keys 31

□ Customer Key Programming 32

□ General Information 32

■ VEHICLE SECURITY ALARM — IF EQUIPPED . . .32

□ Rearming Of The System 32

□ To Arm The System 33

□ To Disarm The System 33

□ Security System Manual Override 34

■ DOORS 34

□ Manual Door Locks 34

- Power Door Locks 35
- Keyless Enter-N-Go — Passive Entry 36
- Automatic Unlock Doors On Exit 40
- Child-Protection Door Lock System — Rear Doors 40

■ SEATS 41
- Manual Front Seat Adjustment 42
- Power Seats — If Equipped 44
- 60/40 Split Folding Rear Seat With Fold-Flat Feature 46
- Driver Memory Seat — If Equipped 48
- Front Heated Seats — If Equipped 51
- Front Ventilated Seats — If Equipped 52

■ HEAD RESTRAINTS 52
- Reactive Head Restraints — Front Seats 53
- Rear Head Restraints 54

■ STEERING WHEEL 56
- Tilt/Telescoping Steering Column 56
- Heated Steering Wheel — If Equipped. 56

■ MIRRORS 57
- Inside Day/Night Mirror — If Equipped 57
- Electrochromic Mirror 58
- Outside Mirrors 59
- Heated Mirrors — If Equipped 60
- Illuminated Vanity Mirrors — If Equipped 61
- Sun Visor “Slide-On-Rod” Feature — If Equipped 61

■ EXTERIOR LIGHTS 61
- Headlight Switch 61
- Automatic Headlights — If Equipped 62
- Headlights On With Wipers (Available With Automatic Headlights Only) 62
- Headlight Time Delay 63
- Lights-On Reminder 63
- Daytime Running Lights (DRL) — If Equipped . .63
- Fog Lights — If Equipped 64

- Multifunction Lever 64
- Turn Signals 65
- Lane Change Assist — If Equipped 65
- High/Low Beam Switch 65
- Flash-To-Pass 65
- Automatic High Beam Headlamp Control — If Equipped 65
- Battery Saver Feature 66

■ INTERIOR LIGHTS 66
- Front Map/Reading Lights 66
- Instrument Panel Dimmer Control 67
- Ambient Light Control — If Equipped 68
- Dome Light Position 68
- Interior Light Defeat (Off) 68
- Parade Mode (Daytime Brightness Feature) 68

■ WINDSHIELD WIPERS AND WASHERS 69
- Windshield Wiper Operation 69
- Rain Sensing Wipers — If Equipped 71
- Windshield Wiper De-Icer — If Equipped 72
- Intermittent Wiper System 72
- Rear Window Features 73

■ CLIMATE CONTROLS 75
- Manual Climate Control Without A Touchscreen Overview 75
- Climate Controls With A Touchscreen Overview . .80
- Automatic Temperature Control (ATC) — If Equipped 90
- Operating Tips 91

■ WINDOWS 93
- Power Window Controls 93
- Auto-Down Feature 94
- Auto-Up Feature With Anti-Pinch Protection 94
- Reset Auto-Up 95
- Window Lockout Switch 95

■ POWER SUNROOF WITH POWER SHADE — IF EQUIPPED 96
□ Opening Sunroof 97
□ Closing Sunroof. 98
□ Venting Sunroof — Express. 98
□ Opening Power Shade 98
□ Closing Power Shade 99
□ Pinch Protect Feature 99
□ Wind Buffeting 99
□ Sunroof Maintenance 99
□ Ignition Off Operation 100
■ HOOD 100
□ Opening The Hood 100
□ Closing The Hood 101
■ LIFTGATE 101
□ Opening 101
□ Closing 103
□ Cargo Area Features 103
■ GARAGE DOOR OPENER — IF EQUIPPED 105
□ Before You Begin Programming HomeLink. 105
□ Canadian/Gate Operator Programming 108
□ Using HomeLink 109
□ Security. 110
□ Troubleshooting Tips 110
□ General Information 110
■ INTERNAL EQUIPMENT 111
□ Storage 111
□ Cupholders 114
□ Sun Visors 115
□ Power Outlets 116
□ Power Inverter — If Equipped 119
□ Wireless Charging Pad — If Equipped 120
■ ROOF LUGGAGE RACK — IF EQUIPPED 122

KEYS

Key Fob

The key fob allows you to lock or unlock the doors and liftgate from distances up to approximately 66ft (20m) using a handheld key fob. The key fob does not need to be pointed at the vehicle to activate the system.

- This feature allows the driver to operate the ignition switch with the push of a button as long as the key fob is in the passenger compartment.
- The Keyless Push Button Ignition has three operating positions which are labeled and will illuminate when in position. The three positions are: OFF, ACC, and ON/RUN. During start, RUN will illuminate.

NOTE: In case the ignition switch does not change with the push of a button, the key fob may have a low or dead battery. In this situation, a back up method can be used to operate the ignition switch. Put the nose side (side opposite of the emergency key) of the key fob against the ENGINE START/STOP button and push to operate the ignition switch.

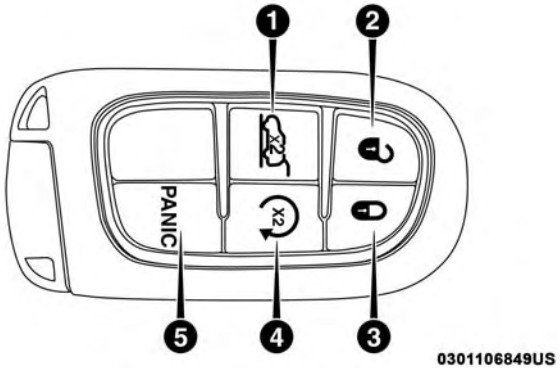

Key Fob

1 — Liftgate Button
2 — Unlock Button
3 — Lock Button
4 — Remote Start Button
5 — PANIC Button

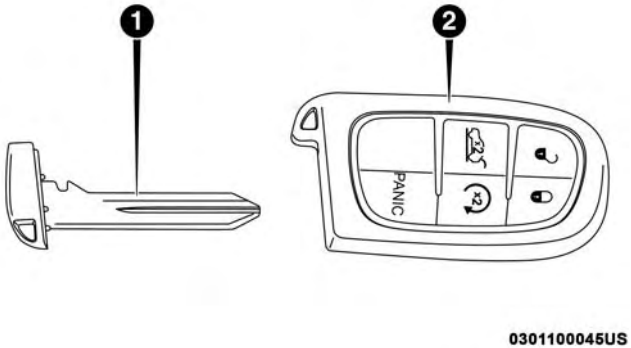

Key Fob With Emergency Key

1 — Emergency Key
2 — Key Fob

NOTE: In case the ignition switch does not change with the push of a button, the key fob may have a low or dead battery. In this situation, a backup method can be used to operate the ignition switch. Put the nose side of the key fob (side opposite of the Emergency Key) against the ENGINE START/STOP button and push to operate the ignition switch.

To Unlock The Doors And Liftgate

Push the interior door unlock button on the door panel.

Push and release the unlock button on the key fob once to unlock the driver's door or twice within five seconds to unlock all doors and the liftgate.

All doors can be programmed to unlock on the first push of the unlock button. Refer to "Uconnect Settings" in "Multimedia" for further information.

The turn signal lights will flash to acknowledge the unlock signal. The illuminated entry system will be activated.

1st Push Of Key Fob Unlock Button

This feature lets you program the system to unlock either the driver's door or all doors on the first push of the unlock button on the key fob. To change the current setting, refer to "Uconnect Settings" in "Multimedia" for further information.

NOTE: If the vehicle is equipped with Passive Entry, refer to "Keyless Enter-N-Go — Passive Entry" located in "Doors" in "Getting To Know Your Vehicle" for further information.

To Lock The Doors And Liftgate

Push and release the lock button on the key fob to lock all doors and liftgate.

The turn signal lights will flash and the horn will chirp to acknowledge the signal. Refer to "Uconnect Settings" located in "Multimedia" for further programmable information.

If the vehicle is equipped with Passive Entry, refer to "Keyless Enter-N-Go — Passive Entry" located in "Doors" in "Getting To Know Your Vehicle" for further information.

Vehicles Equipped With Keyless Enter-N-Go — Passive Entry

If one or more doors are open, or the liftgate is open, the doors will lock. The doors will unlock again automatically if the key is left inside the passenger compartment, otherwise the doors will stay locked.

Replacing The Battery In The Key With Remote Control

The recommended replacement battery is one CR2032 battery.

NOTE:

- Perchlorate Material — special handling may apply. See www.dtsc.ca.gov/hazardouswaste/perchlorate for further information.
- Do not touch the battery terminals that are on the back housing or the printed circuit board.

1. Remove the emergency key by sliding the mechanical latch on the back of the key fob sideways with your thumb and pull the emergency key out with your other hand.

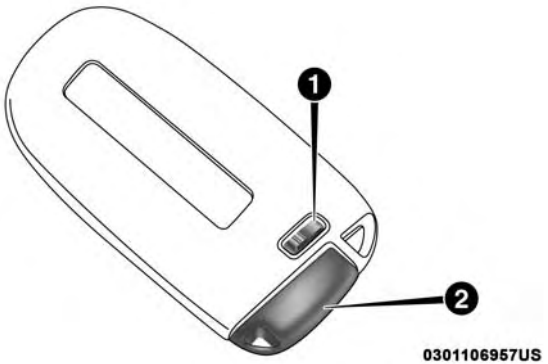

Emergency Key Removal

1 — Emergency Key Release Button
2 — Emergency Key

2. Separate the key fob halves using the tip of the emergency key, a #2 flat blade screwdriver, or a coin and gently pry the two halves of the key fob apart. Make sure not to damage the seal during removal.

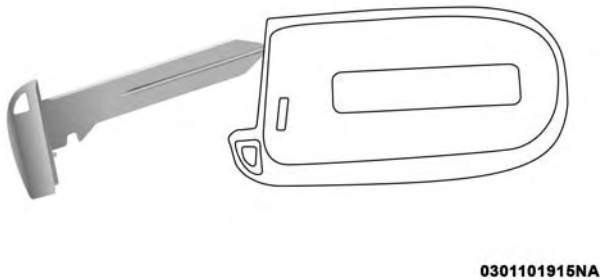

Emergency Key Removal

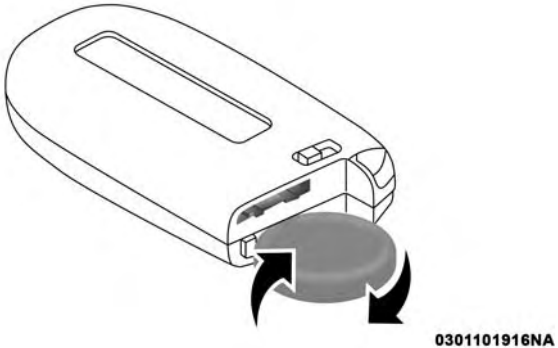

Separating Case With A Coin

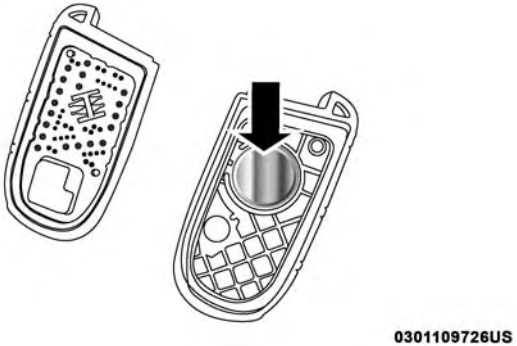

Key Fob Battery Replacement

3. Remove the battery by turning the back cover over (battery facing downward) and tapping it lightly on a solid surface such as a table or similar and replace the battery. When replacing the battery, match the + sign on the battery to the + sign on the inside of the battery clip, located on the back cover. Avoid touching the new battery with your fingers. Skin oils may cause battery deterioration. If you touch a battery, clean it with rubbing alcohol.

4. To assemble the key fob case, snap the two halves together.

Programming Additional Key Fobs

Programming the key fob may be performed by your authorized dealer.

Request For Additional Key Fobs

NOTE: Only key fobs that are programmed to the vehicle electronics can be used to start and operate the vehicle. Once a key fob is programmed to a vehicle, it cannot be programmed to any other vehicle.

WARNING!

- **Always remove the key fobs from the vehicle and lock all doors when leaving the vehicle unattended.**
- **For vehicles equipped with Keyless Enter-N-Go — Ignition, always remember to place the ignition in the OFF mode.**

Duplication of key fobs may be performed at an authorized dealer. This procedure consists of programming a blank key fob to the vehicle electronics. A blank key fob is one that has never been programmed.

NOTE: When having the Sentry Key Immobilizer System serviced, bring all vehicle keys with you to an authorized dealer.

General Information

The following regulatory statement applies to all radio frequency (RF) devices equipped in this vehicle:

This device complies with Part 15 of the FCC Rules and with Industry Canada license-exempt RSS standard(s). Operation is subject to the following two conditions:

1. This device may not cause harmful interference, and
2. This device must accept any interference received, including interference that may cause undesired operation.

NOTE: Changes or modifications not expressly approved by the party responsible for compliance could void the user's authority to operate the equipment.

IGNITION SWITCH

Keyless Enter-N-Go — Ignition

This feature allows the driver to operate the ignition switch with the push of a button as long as the key fob is in the passenger compartment.

The push button ignition has three operating modes. The three modes are OFF, ACC, and RUN.

NOTE: If the ignition switch does not change with the push of a button, the key fob may have a low or dead battery. In this situation, a back up method can be used to operate the ignition switch. Put the nose side (side opposite of the emergency key) of the key fob against the ENGINE START/STOP button and push to operate the ignition switch.

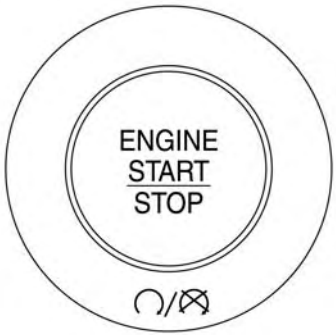

0302110417US

START/STOP Ignition Button

The push button ignition can be placed in the following modes:

OFF

- The engine is stopped.
- Some electrical devices (e.g. Central locking, alarm, etc.) are still available.

ACC

- Engine is not started.
- Some electrical devices are available.

RUN

- Driving position.
- All the electrical devices are available.

NOTE: The vehicle will not start if the key fob is located inside the cargo area and the liftgate is opened.

WARNING!

- **When exiting the vehicle, always remove the key fob from the vehicle and lock your vehicle.**

(Continued)

WARNING! ***(Continued)***

- **Never leave children alone in a vehicle, or with access to an unlocked vehicle.**
- **Allowing children to be in a vehicle unattended is dangerous for a number of reasons. A child or others could be seriously or fatally injured. Children should be warned not to touch the parking brake, brake pedal or the gear selector.**
- **Do not leave the key fob in or near the vehicle, or in a location accessible to children, and do not leave the ignition of a vehicle equipped with Keyless Enter-N-Go in the ON/RUN mode. A child could operate power windows, other controls, or move the vehicle.**
- **Do not leave children or animals inside parked vehicles in hot weather. Interior heat build-up may cause serious injury or death.**

CAUTION!

An unlocked vehicle is an invitation for thieves. Always remove key fob from the vehicle and lock all doors when leaving the vehicle unattended.

NOTE: For further information, refer to "Starting The Engine" in "Starting And Operating."

Vehicle On Message

When opening the driver's door and the ignition is in ON/RUN (engine not running) position, a chime will sound to remind you to place the ignition in the OFF position. In addition to the chime, the Vehicle On message will display in the cluster.

NOTE: The power window switches and power sunroof (if equipped) will remain active for three minutes after the ignition is cycled to the OFF position. Opening either front door will cancel this feature. The time for this feature is programmable.

WARNING!

- **Before exiting a vehicle, always shift the automatic transmission into PARK, apply the parking brake, place the engine in the OFF position, remove the key fob from the vehicle and lock your vehicle. If equipped with Keyless Enter-N-Go, always make sure the keyless ignition is in "OFF" position, remove the key fob from the vehicle and lock the vehicle.**

(Continued)

WARNING! *(Continued)*

- **Never leave children alone in a vehicle, or with access to an unlocked vehicle.**
- **Allowing children to be in a vehicle unattended is dangerous for a number of reasons. A child or others could be seriously or fatally injured. Children should be warned not to touch the parking brake, brake pedal or the gear selector.**
- **Do not leave the key fob in or near the vehicle, or in a location accessible to children, and do not leave the ignition of a vehicle equipped with Keyless Enter-N-Go in the ON/RUN mode. A child could operate power windows, other controls, or move the vehicle.**
- **Do not leave children or animals inside parked vehicles in hot weather. Interior heat build-up may cause serious injury or death.**

CAUTION!

An unlocked vehicle is an invitation for thieves. Always remove key fob from the vehicle and lock all doors when leaving the vehicle unattended.

REMOTE STARTING SYSTEM — IF EQUIPPED

This system uses the key fob to start the engine conveniently from outside the vehicle while still maintaining security. The system has a range of approximately 328ft (100m).

NOTE:

- The vehicle must be equipped with an automatic transmission to be equipped with Remote Start.
- Obstructions between the vehicle and key fob may reduce this range.

How To Use Remote Start — If Equipped

- Push remote start button on the key fob twice within five seconds. Pushing the remote start button a third time shuts the engine off.
- To drive the vehicle, push unlock button, insert the key in the ignition and turn to the ON/RUN position.
- With remote start, the engine will only run for 15 minutes (timeout) unless the ignition key is placed in the ON/RUN position.

- The vehicle must be started with the key after two consecutive timeouts.

All of the following conditions must be met before the engine will remote start:

- Gear selector in PARK
- Doors closed
- Hood closed
- Liftgate closed
- Hazard switch off
- Brake switch inactive (brake pedal not pushed)
- Battery at an acceptable charge level
- Check engine light shall not be present
- PANIC button not pushed
- System not disabled from previous remote start event
- Vehicle alarm system indicator flashing
- Ignition in STOP/OFF position
- Fuel level meets minimum requirement
- Vehicle security alarm is not signaling an intrusion

WARNING!

- **Do not start or run an engine in a closed garage or confined area. Exhaust gas contains Carbon Monoxide (CO) which is odorless and colorless. Carbon Monoxide is poisonous and can cause serious injury or death when inhaled.**
- **Keep key fobs away from children. Operation of the Remote Start System, windows, door locks or other controls could cause serious injury or death.**

Remote Start Abort Message On The Instrument Cluster Display — If Equipped

The following messages will display in the instrument cluster display if the vehicle fails to remote start or exits remote start prematurely:

- Remote Start Aborted — Door Open
- Remote Start Aborted — Hood Open
- Remote Start Aborted — Fuel Low
- Remote Start Aborted — Liftgate Open
- Remote Start Disabled — Start Vehicle To Reset
- Remote Start Aborted — Too Cold
- Remote Start Aborted — Time Expired

The message will stay active until the ignition is turned to the ON/RUN position.

To Enter Remote Start Mode

Push and release the remote start button on the key fob twice within five seconds. The vehicle doors will lock, the parking lights will flash, and the horn will chirp twice (if programmed). Then, the engine will start, and the vehicle will remain in the Remote Start mode for a 15-minute cycle.

NOTE:

- If an engine fault is present or fuel level is low, the vehicle will start and then shut down in 10 seconds.
- The park lamps will turn on and remain on during Remote Start mode.
- For security, power window and power sunroof operation (if equipped) are disabled when the vehicle is in the Remote Start mode.
- The engine can be started two consecutive times with the key fob. However, the ignition must be cycled by pushing the START/STOP button twice (or the ignition switch must be cycled to the ON/RUN position) before you can repeat the start sequence for a third cycle.

To Exit Remote Start Mode Without Driving The Vehicle

Push and release the remote start button one time or allow the engine to run for the entire 15-minute cycle.

NOTE: To avoid unintentional shutdowns, the system will disable with a one time push of the remote start button for two seconds after receiving a valid remote start request.

To Exit Remote Start Mode And Drive The Vehicle

Before the end of 15-minute cycle, push and release the unlock button on the key fob to unlock the doors and disarm the vehicle security alarm (if equipped). Then, prior to the end of the 15-minute cycle, push and release the START/STOP button. If the START/STOP button is not present, insert the key fob into the ignition switch and turn the switch to the ON/RUN position.

NOTE:

- For vehicles not equipped with the Keyless Enter-N-Go — Passive Entry feature, the ignition switch must be in the ON/RUN position in order to drive the vehicle.
- For vehicles not equipped with the Keyless Enter-N-Go — Passive Entry feature, the message "Remote Start Active — Insert Key and Turn To Run" will show in the instrument cluster display until you insert the key.
- For vehicles equipped with the Keyless Enter-N-Go — Passive Entry feature, the message "Remote Start Active — Push Start Button" will will show in the instrument cluster display until you push the START button.

Remote Start Comfort Systems — If Equipped

When remote start is activated, the heated steering wheel and driver heated seat features will automatically turn on in cold weather. In warm weather, the driver vented seat feature will automatically turn on when the remote start is activated. These features will stay on through the duration of remote start or until the ignition switch is cycled to the ON/RUN position.

Remote Start Windshield Wiper De–Icer Activation — If Equipped

When remote start is active and the outside ambient temperature is less than 40°F (4.4°C), the Windshield Wiper De-Icer will be enabled. Exiting remote start will resume previous operation, except if the Windshield Wiper De-Icer is active. The Windshield Wiper De-Icer timer and operation will continue.

General Information

The following regulatory statement applies to all radio frequency (RF) devices equipped in this vehicle:

This device complies with Part 15 of the FCC Rules and with Industry Canada license-exempt RSS standard(s). Operation is subject to the following two conditions:

1. This device may not cause harmful interference, and
2. This device must accept any interference received, including interference that may cause undesired operation.

NOTE: Changes or modifications not expressly approved by the party responsible for compliance could void the user's authority to operate the equipment.

SENTRY KEY

The Sentry Key Immobilizer system prevents unauthorized vehicle operation by disabling the engine. The system does not need to be armed or activated. Operation is automatic, regardless of whether the vehicle is locked or unlocked.

The system uses a key fob, keyless push button ignition and a RF receiver to prevent unauthorized vehicle operation. Therefore, only key fobs that are programmed to the vehicle can be used to start and operate the vehicle. The system will not allow the engine to crank if an invalid key fob is used to start and operate the vehicle. The system will shut the engine off in two seconds if an invalid key fob is used to start the engine.

After turning the ignition switch to the ON/RUN position, the vehicle security light will turn on for three seconds for a bulb check. If the light remains on after the bulb check, it indicates that there is a problem with the electronics. In addition, if the light begins to flash after the bulb check, it indicates that someone used an invalid key fob to start the engine. Either of these conditions will result in the engine being shut off after two seconds.

If the vehicle security light turns on during normal vehicle operation (vehicle running for longer than ten seconds), it indicates that there is a fault in the electronics. Should this occur, have the vehicle serviced as soon as possible by your authorized dealer.

CAUTION!

The Sentry Key Immobilizer system is not compatible with some aftermarket remote starting systems. Use of these systems may result in vehicle starting problems and loss of security protection.

All of the key fobs provided with your new vehicle have been programmed to the vehicle electronics.

Replacement Keys

NOTE: Only key fobs that are programmed to the vehicle electronics can be used to start and operate the vehicle. Once a key fob is programmed to a vehicle, it cannot be programmed to any other vehicle.

CAUTION!

- **Always remove the key fobs from the vehicle and lock all doors when leaving the vehicle unattended.**
- **For vehicles equipped with Keyless Enter-N-Go — Ignition, always remember to place the ignition in the OFF position.**

NOTE: Duplication of key fobs may be performed at an authorized dealer. This procedure consists of programming a blank key fob to the vehicle electronics. A blank key fob is one that has never been programmed.

When having the Sentry Key Immobilizer System serviced, bring all vehicle keys with you to an authorized dealer.

Customer Key Programming

Programming key fobs may be performed at your authorized dealer.

General Information

The following regulatory statement applies to all radio frequency (RF) devices equipped in this vehicle:

This device complies with Part 15 of the FCC Rules and with Industry Canada license-exempt RSS standard(s). Operation is subject to the following two conditions:

1. This device may not cause harmful interference, and
2. This device must accept any interference received, including interference that may cause undesired operation.

NOTE: Changes or modifications not expressly approved by the party responsible for compliance could void the user's authority to operate the equipment.

VEHICLE SECURITY ALARM — IF EQUIPPED

The vehicle security alarm monitors the vehicle doors, hood, liftgate, and the Keyless Enter-N-Go — Ignition for unauthorized operation. While the vehicle security alarm is armed, interior switches for door locks and liftgate release are disabled. If something triggers the alarm, the vehicle security alarm will provide the following audible and visible signals:

- The horn will pulse
- The turn signals will flash
- The vehicle security light in the instrument cluster will flash

Rearming Of The System

If something triggers the alarm, and no action is taken to disarm it, the vehicle security alarm will turn the horn off after approximately 90 seconds, and then the vehicle security alarm will rearm itself.

To Arm The System

Follow these steps to arm the vehicle security alarm:

1. Make sure the vehicle's ignition is placed in the "OFF" mode.
   - For vehicles equipped with Keyless Entry, make sure the vehicle's keyless ignition system is OFF.
2. Perform one of the following methods to lock the vehicle:
   - Push the lock button on the interior power door lock switch with the driver and/or passenger door open.
   - Push the lock button on the exterior Passive Entry Door Handle with a valid key fob available in the same exterior zone (refer to "Doors" in "Getting To Know Your Vehicle" for further information).
   - Push the lock button on the key fob.
3. If any doors are open, close them.

To Disarm The System

The vehicle security alarm can be disarmed using any of the following methods:

- Push the unlock button on the key fob.
- Grasp the passive entry door handle to unlock the door, refer to "Doors" in "Getting To Know Your Vehicle" for further information.
- Cycle the ignition out of the off mode to disarm the system.

NOTE:

- The driver's door key cylinder and the liftgate button on the key fob cannot arm or disarm the vehicle security alarm.
- The vehicle security alarm remains armed during power liftgate entry. Pushing the liftgate button will not disarm the vehicle security alarm. If someone enters the vehicle through the liftgate and opens any door, the alarm will sound.
- When the vehicle security alarm is armed, the interior power door lock switches will not unlock the doors.

The vehicle security alarm is designed to protect your vehicle. However, you can create conditions where the system will give you a false alarm. If one of the previously described arming sequences has occurred, the vehicle security alarm will arm regardless of whether you are in

the vehicle or not. If you remain in the vehicle and open a door, the alarm will sound. If this occurs, disarm the vehicle security alarm.

If the vehicle security alarm is armed and the battery becomes disconnected, the vehicle security alarm will remain armed when the battery is reconnected; the exterior lights will flash, and the horn will sound. If this occurs, disarm the vehicle security alarm.

Security System Manual Override

The vehicle security alarm will not arm if you lock the doors using the manual door lock plunger.

DOORS

Manual Door Locks

To lock each door, rotate the door lock knob on each door trim panel rearward until the red area is hidden. To unlock the front doors, pull the inside door handle to the first detent or rotate the door lock button until the red indicator is visible. To unlock the rear doors, rotate the door lock button until the red indicator is visible.

If the door lock button is locked (red indicator hidden) when you shut the door, the door will lock. Therefore, make sure the key fob is not inside the vehicle before closing the door.

NOTE: The manual door locks will not lock or unlock the liftgate.

WARNING!

- **For personal security and safety in the event of a collision, lock the vehicle doors before you drive as well as when you park and exit the vehicle.**
- **When exiting the vehicle, always remove the key fob from the vehicle and lock your vehicle. If equipped with Keyless Enter-N-Go — Ignition, always make sure the keyless ignition node is in "OFF" mode, remove the key fob from the vehicle and lock the vehicle. Unsupervised use of vehicle equipment may cause severe personal injuries or death.**
- **Never leave children alone in a vehicle, or with access to an unlocked vehicle. Allowing children to be in a vehicle unattended is dangerous for a number of reasons. A child or others could be seriously or fatally injured. Children should be warned not to**

(Continued)

WARNING! *(Continued)*

touch the parking brake, brake pedal or the gear selector.

- **Do not leave the key fob in or near the vehicle, or in a location accessible to children, and do not leave the ignition of a vehicle equipped with Keyless Enter-N-Go — Ignition the ACC or ON/RUN mode. A child could operate power windows, other controls, or move the vehicle.**

Power Door Locks

The power door lock switches are located on each front door panel. Push the switch to lock or unlock the doors.

NOTE: The key fob may not be able to be detected by the vehicle keyless-go system if it is located next to a mobile phone, laptop or other electronic device; these devices may block the key fob's wireless signal and prevent the keyless-go system from starting the vehicle.

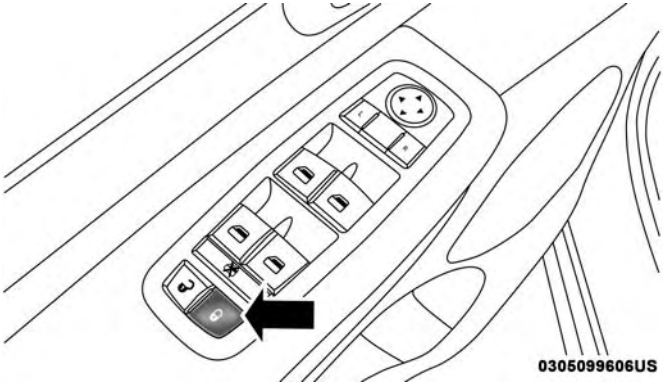

Power Door Lock Switch

The driver's door will unlock automatically if the keys are found inside the car when door lock button on trim is used to lock the door. At the third attempt, the doors will lock even if the key is inside.

If the door lock switch is pushed while the ignition is in ACC or ON/RUN and the driver's door is open, the doors will not lock.

If a rear door is locked, it cannot be opened from inside the vehicle without first unlocking the door. The door may be unlocked manually by raising the lock knob.

Keyless Enter-N-Go — Passive Entry

The Passive Entry system is an enhancement to the vehicle's Remote Keyless Entry system and a feature of Keyless Enter-N-Go — Passive Entry. This feature allows you to lock and unlock the vehicle's door(s) and fuel door without having to push the key fob lock or unlock buttons.

NOTE:

- Passive Entry may be programmed ON/OFF; refer to "Uconnect Settings" in "Multimedia" for further information.
- If wearing gloves on your hands, or if it has been raining/snowing on the Passive Entry door handle, the unlock sensitivity can be affected, resulting in a slower response time.
- If the vehicle is unlocked by Passive Entry and no door is opened within 60 seconds, the vehicle will re-lock and if equipped will arm the security alarm.
- The key fob may not be able to be detected by the vehicle passive entry system if it is located next to a mobile phone, laptop or other electronic device; these devices may block the key fob's wireless signal and prevent the passive entry handle from locking/unlocking the vehicle.
- Passive Entry activates illuminated approach for the time set by the customer (0, 30, 60, or 90 seconds), and flashes the turn signal lights. Refer to "Uconnect Settings" in "Multimedia for further information

To Unlock From The Driver's Side

With a valid Passive Entry key fob within 5ft (1.5m) of the driver's door handle, grab the front driver door handle to unlock the driver's door automatically.

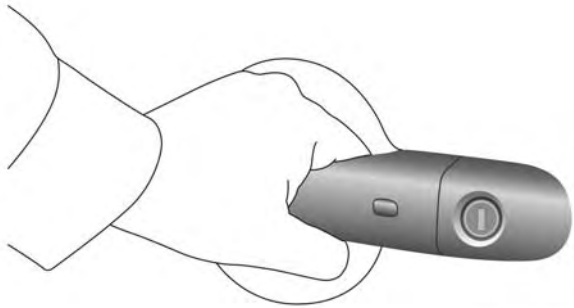

0213085343US

Grab The Door Handle To Unlock

NOTE: If "Unlock All Doors 1st Press" is programmed, all doors will unlock when you grab hold of the front driver's door handle. To select between "Unlock Driver Door 1st Push" and "Unlock All Doors 1st Press," refer to "Uconnect Settings" in "Multimedia" for further information.

To Unlock From The Passenger Side

With a valid Passive Entry key fob within 5ft (1.5m) of the passenger door handle, grab the front passenger door handle to unlock all four doors and the liftgate automatically.

NOTE: All doors will unlock when the front passenger door handle is grabbed regardless of the driver's door unlock preference setting ("Unlock Driver Door 1st Press" or "Unlock All Doors 1st Press").

Preventing Inadvertent Locking Of Passive Entry Key Fob In Vehicle (FOBIK-Safe)

To minimize the possibility of unintentionally locking a Passive Entry key fob inside your vehicle, the Passive Entry system is equipped with an automatic door unlock feature which will function if the ignition is OFF.

FOBIK-Safe only executes in vehicles with passive entry. There are three situations that trigger a FOBIK-Safe search in any passive entry vehicle:

- A lock request is made by a valid Passive Entry key fob while a door is open.
- A lock request is made by the Passive Entry door handle while a door is open.
- A lock request is made by the door panel switch while the door is open.

When any of these situations occur, after all open doors are shut, the FOBIK-Safe search will be executed. If it finds a Passive Entry key fob inside the car, the car will unlock and alert the customer.

NOTE: The vehicle will only unlock the doors when a valid Passive Entry key fob is detected inside the vehicle. The vehicle will not unlock the doors when any of the following conditions are true:

- The doors are manually locked using the door lock knobs.
- Three attempts are made to lock the doors using the door panel switch and then close the doors.

To Unlock/Enter The Liftgate

The liftgate passive entry unlock feature is built into liftgate handle release. With a valid Passive Entry key fob within 5ft (1.5m) of the liftgate, push the electronic liftgate release to open with one fluid motion.

To Lock The Liftgate

With a valid Passive Entry key fob within 5ft (1.5m) of the liftgate, push the passive entry lock button located to the right of liftgate handle release.

NOTE: The liftgate passive entry lock button will lock all doors and the liftgate. The liftgate unlock feature is built into the electronic liftgate release.

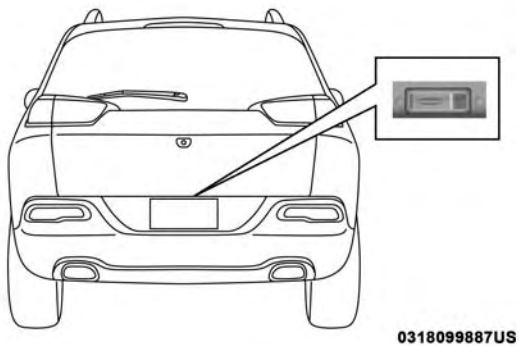

Electronic Liftgate Release/Liftgate Passive Entry Location

To Lock The Vehicle's Doors And Liftgate

With one of the vehicle's Passive Entry key fob within 5ft (1.5m) of the driver or passenger front door handles, push the Passive Entry lock button located on the outside door handle.

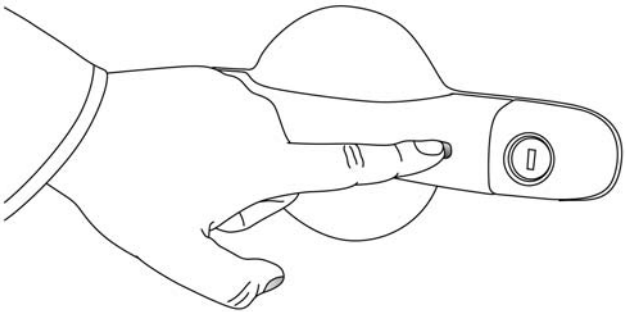

0213085345US

Push The Door Handle Button To Lock

NOTE: DO NOT grab the door handle, when pushing the door handle lock button. This could unlock the door(s).

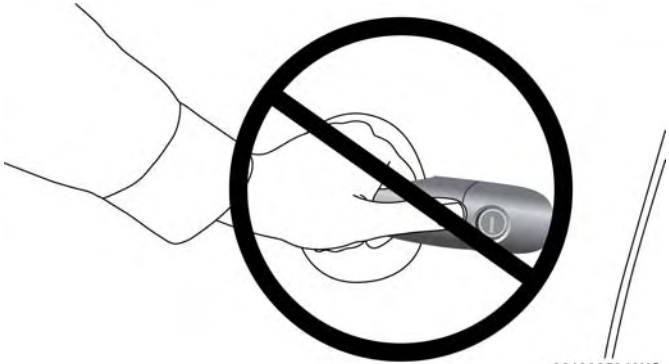

0213085346US

DO NOT Grab The Door Handle When Locking

NOTE:

- After pushing the door handle button, you must wait two seconds before you can lock or unlock the doors, using either Passive Entry door handle. This is done to allow you to check if the vehicle is locked by pulling the door handle without the vehicle reacting and unlocking.
- If Passive Entry is disabled using the Uconnect System, the key protection described in "Preventing Inadvertent Locking of Passive Entry key fob in Vehicle" remains active/functional.

- The Passive Entry system will not operate if the key fob battery is dead.

The vehicle doors can also be locked by using the lock button located on the vehicle's interior door panel.

General Information

The following regulatory statement applies to all Radio Frequency (RF) devices equipped in this vehicle:

This device complies with Part 15 of the FCC Rules and with Industry Canada license-exempt RSS standard(s). Operation is subject to the following two conditions:

1. This device may not cause harmful interference.
2. This device must accept any interference received, including interference that may cause undesired operation.

NOTE: Changes or modifications not expressly approved by the party responsible for compliance could void the user's authority to operate the equipment.

Automatic Unlock Doors On Exit

The doors will unlock automatically on vehicles with power door locks if:

1. The Automatic Unlock Doors On Exit feature is enabled.
2. All doors are closed.
3. The transmission gear selector was not in PARK, then is placed in PARK.
4. Any door is opened.

Child-Protection Door Lock System — Rear Doors

To provide a safer environment for small children riding in the rear seats, the rear doors are equipped with a Child-Protection Door Lock system.

To use the system, open each rear door, use a flat blade screwdriver (or emergency key) and rotate the dial to the lock or unlock position. When the system on a door is engaged, that door can only be opened by using the outside door handle even if the inside door lock is in the unlocked position.

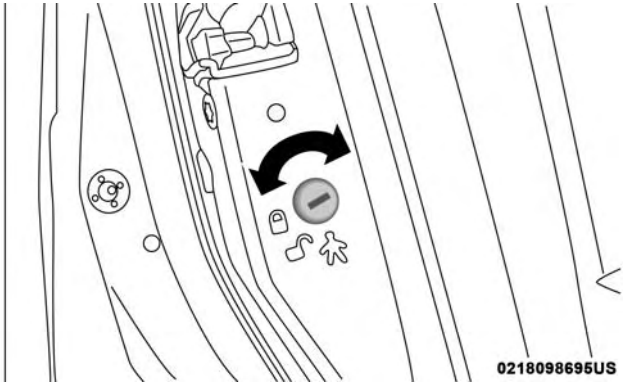

Child-Protection Door Lock Function

NOTE:

- When the child lock system is engaged, the door can be opened only by using the outside door handle even though the inside door lock is in the unlocked position.
- After disengaging the Child-Protection Door Lock system, always test the door from the inside to make certain it is in the desired position.
- After engaging the Child-Protection Door Lock system, always test the door from the inside to make certain it is in the desired position.
- For emergency exit with the system engaged, rotate the door lock button until the lock indicator is hidden (unlocked position), roll down the window, and open the door with the outside door handle.

WARNING!

Avoid trapping anyone in a vehicle in a collision. Remember that the rear doors can only be opened from the outside when the Child-Protection locks are engaged (locked).

SEATS

Seats are a part of the Occupant Restraint System of the vehicle.

WARNING!

- **It is dangerous to ride in a cargo area, inside or outside of a vehicle. In a collision, people riding in these areas are more likely to be seriously injured or killed.**
- **Do not allow people to ride in any area of your vehicle that is not equipped with seats and seat belts.**

(Continued)

WARNING! *(Continued)*

In a collision, people riding in these areas are more likely to be seriously injured or killed.

- **Be sure everyone in your vehicle is in a seat and using a seat belt properly.**

Manual Front Seat Adjustment

Manual Front Seat Forward/Rearward Adjustment

On models equipped with manual seats, the adjusting bar is located at the front of the seats, near the floor.

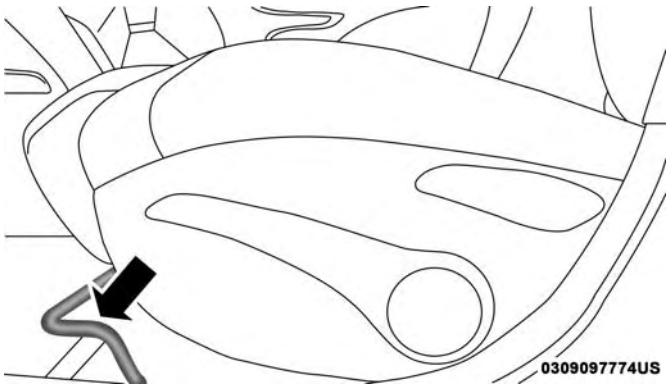

Front Seat Adjustment

While sitting in the seat, lift up on the bar and move the seat forward or rearward. Release the bar once you have reached the desired position. Then, using body pressure, move forward and rearward on the seat to be sure that the seat adjusters have latched.

WARNING!

- **Adjusting a seat while driving may be dangerous. Moving a seat while driving could result in loss of control which could cause a collision and serious injury or death.**
- **Seats should be adjusted before fastening the seat belts and while the vehicle is parked. Serious injury or death could result from a poorly adjusted seat belt.**

Manual Seat Height Adjustment — If Equipped

The driver's and passenger's seat height can be raised or lowered by using a lever, located on the outboard side of the seat. Pull upward on the lever to raise the seat height or push downward on the lever to lower the seat height.

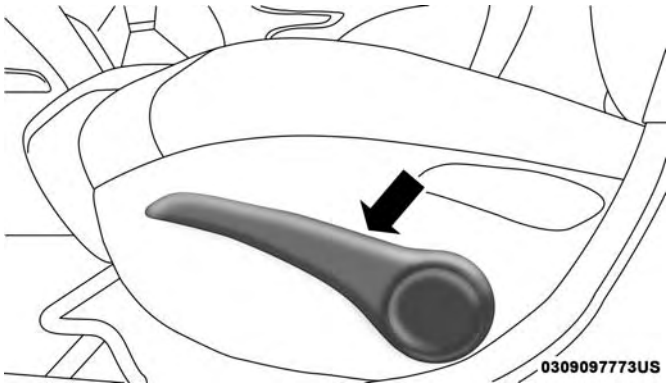

Seat Height Adjustment

Manual Front Seat Recline Adjustment

To adjust the seatback, lift the lever located on the outboard side of the seat, lean back to the desired position and release the lever. To return the seatback, lift the lever, lean forward and release the lever.

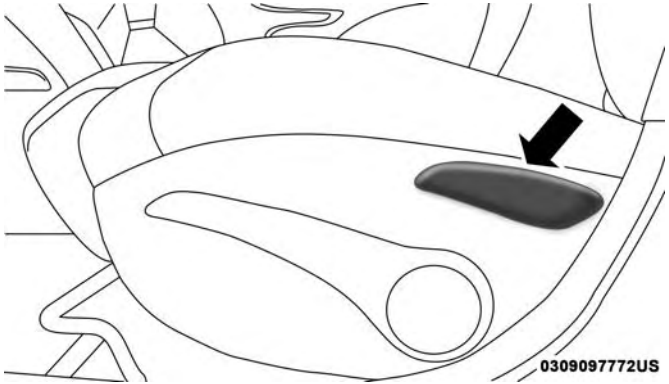

Recline Lever

WARNING!

Do not ride with the seatback reclined so that the shoulder belt is no longer resting against your chest. In a collision you could slide under the seat belt, which could result in serious injury or death.

Power Seats — If Equipped

Some models may be equipped with a power driver's seat and/or power passenger seat. The power seat switch is located on the outboard side of the seat near the floor. Use the switch to move the seat up, down, forward or rearward.

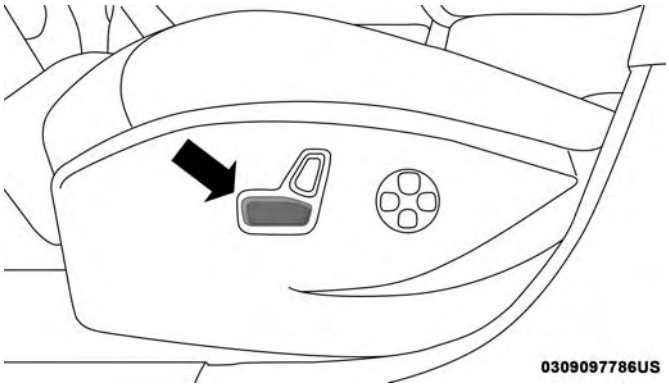

Power Seat Switch

Forward Or Rearward Adjustment

The seat can be adjusted both forward and rearward. Push the seat switch forward or rearward, the seat will move in the direction of the switch. Release the switch when the desired position has been reached.

Height Adjustment

The height of the seats can be adjusted up or down. Pull upward or push downward on the seat switch, the seat will move in the direction of the switch. Release the switch when the desired position is reached.

Tilt Adjustment

The angle of the seat cushion can be adjusted up or down. Pull upward or push downward on the front of the seat switch and the front of the seat cushion will move in the direction of the switch.

Reclining The Seatback Forward Or Rearward

The seatback can be reclined both forward and rearward. Push the seat recliner switch forward or rearward. The seatback will move in the direction of the switch. Release the switch when the desired position has been reached.

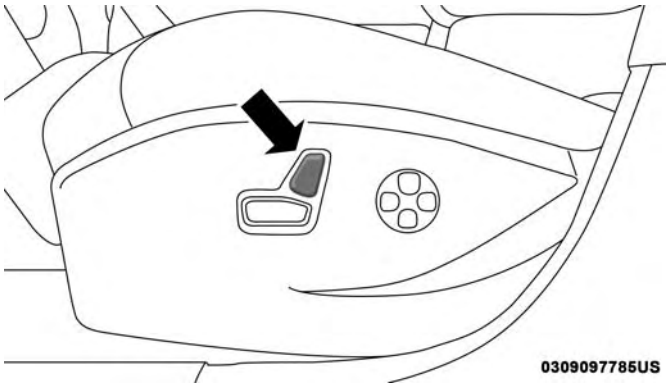

Power Seat Recliner Switch

WARNING!

Do not ride with the seatback reclined so that the shoulder belt is no longer resting against your chest. In a collision you could slide under the seat belt, which could result in serious injury or death.

Power Lumbar — If Equipped

Vehicles equipped with power driver or passenger seats may be equipped with power lumbar. The power lumbar switch is located on the outboard side of the power seat. Push the switch forward or rearward to increase or decrease the lumbar support. Push the switch upward or downward to raise or lower the lumbar support.

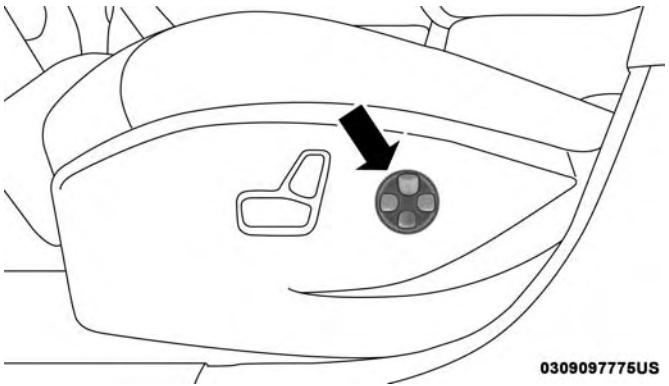

Power Lumbar Switch

60/40 Split Folding Rear Seat With Fold-Flat Feature

To provide additional storage area, each rear seat can be folded flat. This allows for extended cargo space and still maintains some rear seating room.

NOTE: Prior to folding the rear seat, it may be necessary to position the front seat to its mid-track position. Also, be sure that the front seats are fully upright and positioned forward. This will allow the rear seat to fold down easily.

WARNING!

- **It is extremely dangerous to ride in a cargo area, inside or outside of a vehicle. In a collision, people riding in these areas are more likely to be seriously injured or killed.**
- **Do not allow people to ride in any area of your vehicle that is not equipped with seats and seat belts.**
- **Be sure everyone in your vehicle is in a seat and using a seat belt properly.**

Rear Seat Forward/Rearward Adjustment — If Equipped

Lift up on the adjusting bar located at the front of the seat near the floor and release it when the seat is at the desired position. Then, using body pressure, move forward and rearward on the seat to be sure that the seat adjusters have latched.

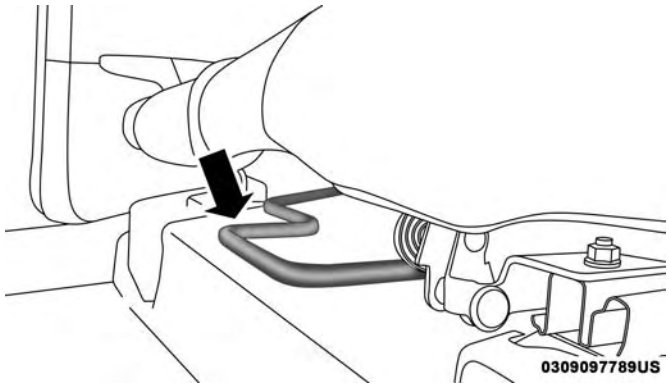

Rear Seat Adjustment Bar

To Lower The Rear Seat

1. Lift the seatback release lever located on the upper outer edge of the seat or pull the pull strap located on the middle outer edge of the seat.

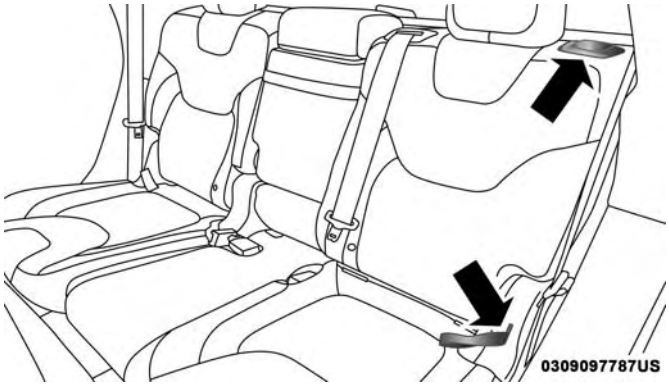

Rear Seatback Release Lever And Pull Strap

2. Fold the rear seatback completely forward.

NOTE: You may experience deformation in the seat cushion from the seat belt buckles if the seats are left folded for an extended period of time. This is normal and by simply placing the seats to the open position, over time the seat cushion will return to its normal shape.

To Raise The Rear Seat

NOTE: If interference from the cargo area prevents the seatback from fully locking, you will have difficulty returning the seat to its proper position.

Raise the seatback and lock it into place.

WARNING!

Be certain that the seatback is securely locked into position. If the seatback is not securely locked into position the seat will not provide the proper stability for child seats and/or passengers. An improperly latched seat could cause serious injury.

Recliner Adjustment

The rear seatback also reclines for additional passenger comfort. Pull on the pull strap while sitting in the rear seat to recline the seatback.

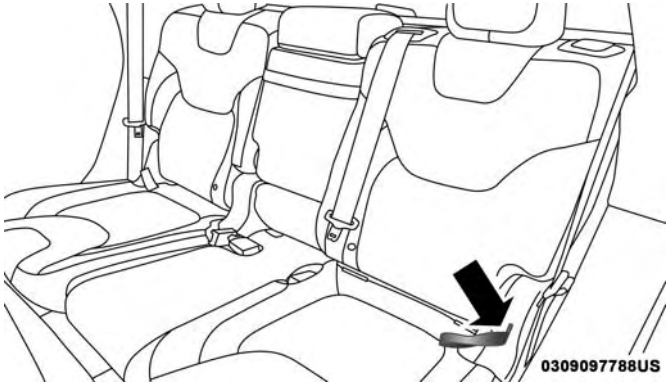

Rear Seat Recliner Pull Strap

WARNING!

Do not ride with the seatback reclined so that the shoulder belt is no longer resting against your chest. In a collision you could slide under the seat belt, which could result in serious injury or death.

Driver Memory Seat — If Equipped

This feature allows the driver to store up to two different memory profiles for easy recall through a memory switch. Each memory profile contains desired position settings for the driver seat and side mirrors and a set of desired radio station presets.

The memory switch is located on the driver's side door panel. The switch contains three buttons, a set (S) button to activate the memory save function, memory button (1) and memory button (2). The memory switch allows the driver to recall either of the two pre-programmed memory profiles by pushing the appropriate number button on the switch.

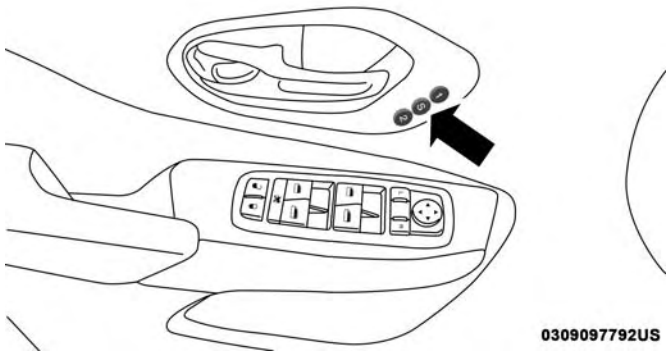

Driver Memory Switch

Programming The Memory Feature

To create a new memory profile, perform the following:

NOTE: Saving a new memory profile will erase an existing profile from memory.

1. Cycle the vehicle's ignition to the ON position.
2. Adjust all memory profile settings to desired preferences (i.e., seat, side mirror and radio station presets).
3. Push and release the set (S) button on the memory switch, then push memory button (1) within five seconds. The instrument cluster display will display which memory position is being set.

If desired, a second memory profile can be stored into memory as follows:

1. Cycle the vehicle's ignition to the ON position.
2. Adjust all memory profile settings to desired preferences (i.e., seat, side mirror and radio station presets).
3. Push and release the set (S) button on the memory switch, then push memory button (2) within five seconds. The instrument cluster display will display which memory position is being set.

NOTE:

- Memory profiles can be set without the vehicle in PARK, but the vehicle must be in PARK to recall a memory profile.
- To set a memory profile to your key fob, refer to "Linking And Unlinking The Remote Keyless Entry Key Fob To Memory" in this section.

Linking And Unlinking The Remote Keyless Entry Key Fob To Memory

Your remote keyless entry key fob can be programmed to recall one of two pre-programmed memory profiles with a push of the unlock button on the key fob.

NOTE: Before programming your key fob you must select the "Memory To FOB" feature through the Uconnect system screen. Refer to "Uconnect Settings" in "Multimedia" for further information.

To program your key fob, perform the following:

1. Cycle the vehicle's ignition to the OFF position.
2. Select the desired memory profile 1 or 2.

NOTE: If a memory profile has not already been set, refer to "Programming The Memory Feature" in this section for instructions on how to set a memory profile.

3. Push and release the set (S) button on the memory switch, then within five seconds push and release the button labeled (1) or (2) accordingly. "Memory Profile Set" (1 or 2) will display in the instrument cluster display.
4. Push and release the lock button on the key fob within 10 seconds.

NOTE: Your key fob can be unlinked to your memory settings by pushing the set (S) button, followed by pushing the unlock button on the key fob within 10 seconds.

Memory Position Recall

NOTE: The vehicle must be in PARK to recall memory positions. If a recall is attempted when the vehicle is not in PARK, a message will display in the instrument cluster display.

- To recall the memory settings for driver one, push memory button number (1) or the unlock button on the key fob linked to memory position 1.
- To recall the memory settings for driver two, push memory button number (2) or the unlock button on the key fob linked to memory position 2.

A recall can be canceled by pushing any of the memory buttons (S, 1, or 2) during a recall. When a recall is canceled, the driver seat will stop moving. A delay of one second will occur before another recall can be selected.

Easy Entry/Exit Seat

This feature provides automatic driver seat positioning to enhance driver mobility when entering and exiting the vehicle.

The distance the driver seat moves depends on where you have the driver seat positioned when you cycle the vehicle's ignition to the OFF position.

- When you cycle the vehicle's ignition to the OFF position, the driver seat will move about 2.4 inches (60 mm) rearward if the driver seat position is greater than or equal to 2.7 inches (67.7 mm) forward of the rear stop. The seat will return to its previously set position when you cycle the vehicle's ignition to the ACC or RUN position.
- The Easy Entry/Easy Exit feature is disabled when the driver seat position is less than 0.9 of an inch (22.7 mm)

forward of the rear stop. At this position, there is no benefit to the driver by moving the seat for Easy Exit or Easy Entry.

Each stored memory setting will have an associated Easy Entry and Easy Exit position.

NOTE: The Easy Entry/Exit feature is not enabled when the vehicle is delivered from the factory. The Easy Entry/Exit feature is enabled (or later disabled) through the programmable features in the Uconnect system. Refer to "Uconnect Settings/Customer Programmable Features" in "Multimedia" for further information.

Front Heated Seats — If Equipped

The front heated seats control buttons are located within the Uconnect system. You can gain access to the control buttons through the climate screen or the controls screen.

- Press the heated seat button once to turn the HI setting on.
- Press the heated seat button a second time to turn the LO setting on.
- Press the heated seat button a third time to turn the heating elements off.

If the HI-level setting is selected, the system will automatically switch to LO-level after approximately 60 minutes of continuous operation. At that time, the display will change from HI to LO, indicating the change. The LO-level setting will turn off automatically after approximately 45 minutes.

NOTE: The engine must be running for the heated seats to operate.

Vehicles Equipped With Remote Start

On models that are equipped with remote start, the heated seats can be programmed to come on during a remote start.

This feature can be programmed through the Uconnect system. Refer to "Uconnect Settings" in "Multimedia" for further information.

WARNING!

- **Persons who are unable to feel pain to the skin because of advanced age, chronic illness, diabetes, spinal cord injury, medication, alcohol use, exhaustion or other physical condition must exercise care when using the seat heater. It may cause burns even at low temperatures, especially if used for long periods of time.**

(Continued)

WARNING! *(Continued)*

- **Do not place anything on the seat or seatback that insulates against heat, such as a blanket or cushion. This may cause the seat heater to overheat. Sitting in a seat that has been overheated could cause serious burns due to the increased surface temperature of the seat.**

Front Ventilated Seats — If Equipped

Located in the seat cushion and seat back are fans that draw the air from the passenger compartment and move air through fine perforations in the seat cover to help keep the driver and front passenger cooler in higher ambient temperatures. The fans operate at two speeds, HI and LO.

The front ventilated seats control buttons are located within the Uconnect system. You can gain access to the control buttons through the climate screen or the controls screen.

- Press the ventilated seat button once to choose HI.
- Press the ventilated seat button a second time to choose LO.
- Press the ventilated seat button a third time to turn the ventilated seat OFF.

NOTE: The engine must be running for the ventilated seats to operate.

Vehicles Equipped With Remote Start

On models that are equipped with remote start, the ventilated seats can be programmed to come on during a remote start.

This feature can be programmed through the Uconnect system. Refer to “Uconnect Settings” in “Multimedia” for further information.

HEAD RESTRAINTS

Head restraints are designed to reduce the risk of injury by restricting head movement in the event of a rear impact. Head restraints should be adjusted so that the top of the head restraint is located above the top of your ear.

WARNING!

- **All occupants, including the driver, should not operate a vehicle or sit in a vehicle’s seat until the head restraints are placed in their proper positions in order to minimize the risk of neck injury in the event of a crash.**

(Continued)

WARNING! *(Continued)*

- **Head restraints should never be adjusted while the vehicle is in motion. Driving a vehicle with the head restraints improperly adjusted or removed could cause serious injury or death in the event of a collision.**

NOTE: Do not reverse the head restraints (making the rear of the head restraint face forward) in an attempt to gain additional clearance to the back of your head.

Reactive Head Restraints — Front Seats

The front driver and passenger seats are equipped with Reactive Head Restraints (RHR). In the event of a rear impact, the RHRs will automatically extend forward minimizing the gap between the back of the occupant's head and the RHR.

The RHRs will automatically return to their normal position following a rear impact. If the RHRs do not return to their normal position, see your authorized dealer immediately.

To raise the head restraint, pull upward on the head restraint. To lower the head restraint, push the adjustment button, located at the base of the head restraint, and push downward on the head restraint.

NOTE: To remove the head restraint, raise it as far as it can go. Then, push the release button and the adjustment button at the base of each post while pulling the head restraint up. Seatback angle may need to be adjusted to fully remove the head restraint. To reinstall the head restraint, put the head restraint posts into the holes and push downward. Then adjust the head restraint to the appropriate height.

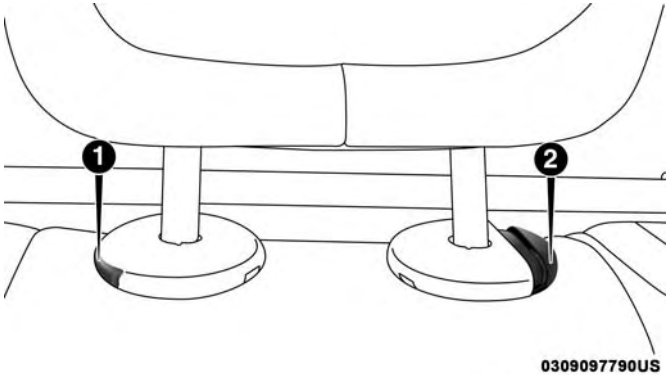

Front Head Restraint

1 — Release Button
2 — Adjustment Button

WARNING!

- **A loose head restraint thrown forward in a collision or hard stop could cause serious injury or death to occupants of the vehicle. Always securely stow removed head restraints in a location outside the occupant compartment.**

(Continued)

WARNING! ***(Continued)***

- **ALL the head restraints MUST be reinstalled in the vehicle to properly protect the occupants. Follow the re-installation instructions above prior to operating the vehicle or occupying a seat.**
- **Do not place items over the top of the Reactive Head Restraint, such as coats, seat covers or portable DVD players. These items may interfere with the operation of the Reactive Head Restraint in the event of a collision and could result in serious injury or death.**

Rear Head Restraints

The rear outboard head restraints have three positions up, mid and down. The center head restraint has only two positions, up and down. When the center seat is being occupied the head restraint should be in the raised position. When there is no occupant in the center seat the head restraint can be lowered for maximum visibility for the driver.

To raise the head restraint, pull upward on the head restraint. To lower the head restraint, push the adjustment button, located at the base of the head restraint, and push downward on the head restraint.

NOTE: To remove the head restraint, raise it as far as it can go. Then, push the release button and the adjustment button at the base of each post while pulling the head restraint up. To reinstall the head restraint, put the head restraint posts into the holes and push downward. Then, adjust the head restraint to the appropriate height.

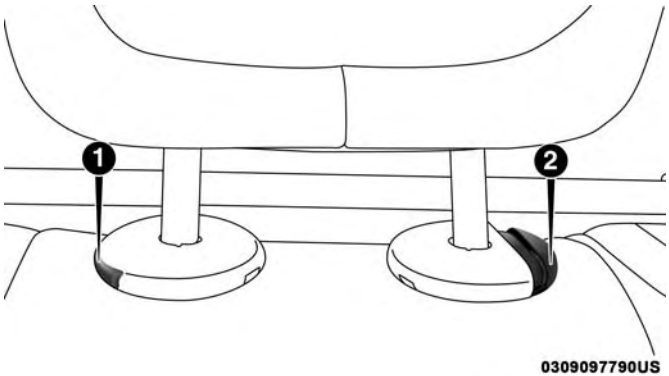

Outboard Head Restraint

1 — Release Button
2 — Adjustment Button

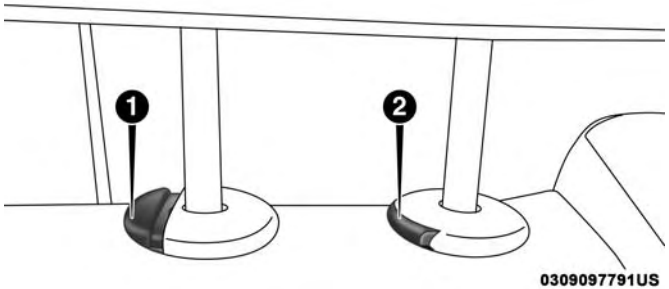

Center Head Restraint

1 — Adjustment Button
2 — Release Button

WARNING!

ALL the head restraints MUST be reinstalled in the vehicle to properly protect the occupants. Follow the re-installation instructions above prior to operating the vehicle or occupying a seat.

STEERING WHEEL

Tilt/Telescoping Steering Column

This feature allows you to tilt the steering column upward or downward. It also allows you to lengthen or shorten the steering column. The tilt/telescoping lever is located below the steering wheel at the end of the steering column.

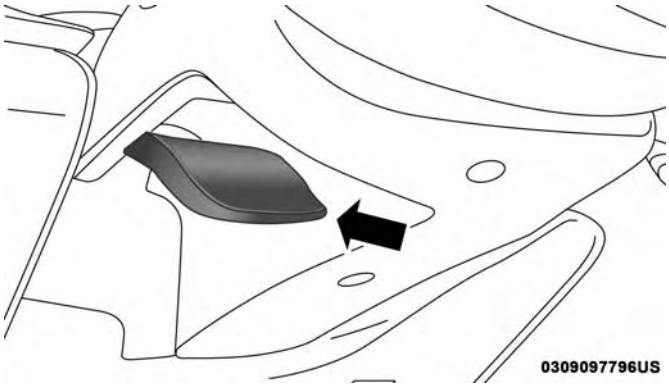

Tilt/Telescoping Lever

To unlock the steering column, push the control handle downward (toward the floor). To tilt the steering column, move the steering wheel upward or downward as desired. To lengthen or shorten the steering column, pull the steering wheel outward or push it inward as desired. To lock the steering column in position, push the control handle upward until fully engaged.

WARNING!

Do not adjust the steering column while driving. Adjusting the steering column while driving or driving with the steering column unlocked, could cause the driver to lose control of the vehicle. Failure to follow this warning may result in serious injury or death.

Heated Steering Wheel — If Equipped

The steering wheel contains a heating element that helps warm your hands in cold weather. The heated steering wheel has only one temperature setting. Once the heated steering wheel has been turned on, it will stay on for an average of 80 minutes or more before automatically shutting off. This time will vary based on environmental temperatures. The heated steering wheel can shut off early or may not turn on when the steering wheel is already warm.

The heated steering wheel control button is located within the Uconnect system. You can gain access to the control button through the climate screen or the controls screen.

- Press the heated steering wheel button once to turn the heating element on.
- Press the heated steering wheel button a second time to turn the heating element off.

If your vehicle is equipped with automatic temperature controls with an integrated center stack, or manual temperature controls, you'll find the heated steering wheel switch on the switch bank below the radio screen.

NOTE: The engine must be running for the heated steering wheel to operate.

Vehicles Equipped With Remote Start

On models that are equipped with remote start, the heated steering wheel can be programmed to come on during a remote start through the Uconnect system. Refer to "Uconnect Settings" in "Multimedia" for further information.

WARNING!

- **Persons who are unable to feel pain to the skin because of advanced age, chronic illness, diabetes, spinal cord injury, medication, alcohol use, exhaustion, or other physical conditions must exercise care when using the steering wheel heater. It may cause burns even at low temperatures, especially if used for long periods.**
- **Do not place anything on the steering wheel that insulates against heat, such as a blanket or steering wheel covers of any type and material. This may cause the steering wheel heater to overheat.**

MIRRORS

Inside Day/Night Mirror — If Equipped

The mirror head can be adjusted up, down, left, and right for various drivers. The mirror should be adjusted to center on the view through the rear window.

Headlight glare from vehicles behind you can be reduced by moving the small control under the mirror to the night position (toward the rear of the vehicle). The mirror should be adjusted while set in the day position (toward the windshield).

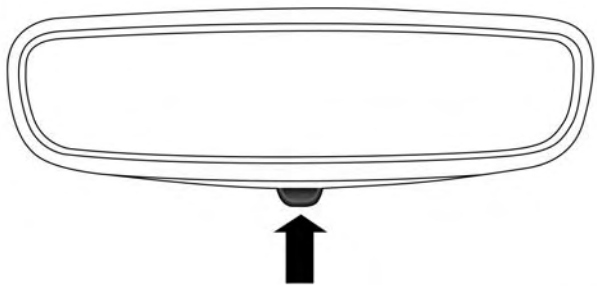

Adjusting Rearview Mirror

Electrochromic Mirror

A single ball joint mirror is provided in the vehicle. It is a twist on mirror that has a fixed position at the windshield. The mirror installs on the windshield button with a counterclockwise rotation and requires no tools for mounting.

The mirror head can be adjusted up, down, left, and right for various drivers. The mirror should be adjusted to center on the view through the rear window.

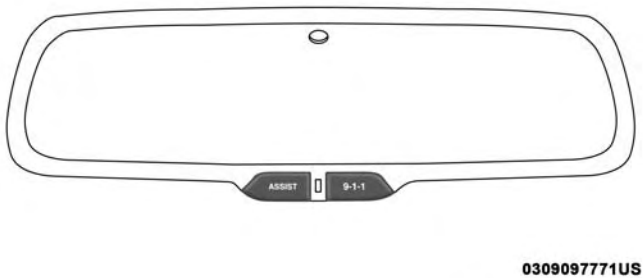

Electrochromic Mirror

NOTE: The automatic dimming feature is disabled when the vehicle is in REVERSE to improve rear view viewing.

The automatic dimming feature can be turned on or off through the touchscreen.

- Press the mirror dimmer button once to turn the feature on.

- Press the mirror dimmer button a second time to turn the feature off.

CAUTION!

To avoid damage to the mirror during cleaning, never spray any cleaning solution directly onto the mirror. Apply the solution onto a clean cloth and wipe the mirror clean.

Outside Mirrors

To receive maximum benefit, adjust the outside mirror(s) to center on the adjacent lane of traffic and a slight overlap of the view obtained from the inside mirror.

NOTE: The passenger side convex outside mirror will give a much wider view to the rear, and especially of the lane next to your vehicle.

WARNING!

Vehicles and other objects seen in an outside convex mirror will look smaller and farther away than they really are. Relying too much on side convex mirrors could cause you to collide with another vehicle or other

(Continued)

WARNING! *(Continued)*

object. Use your inside mirror when judging the size or distance of a vehicle seen in a side convex mirror.

Power Mirrors

The power mirror switches are located on the driver's door trim panel.

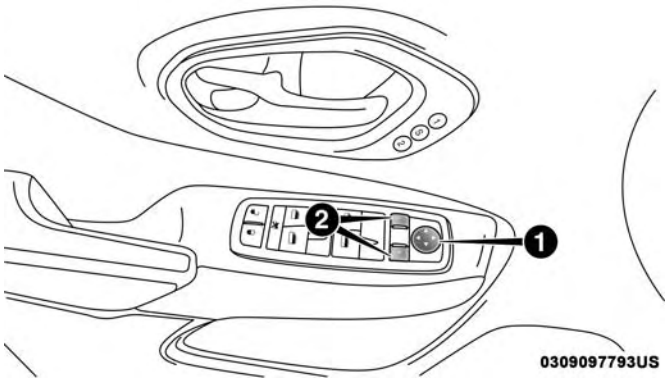

Power Mirror Switches

1 — Mirror Direction Control
2 — Left And Right Mirror Select

Power Folding Mirrors

The switch for the power folding mirrors is located between the power mirror switches L (left) and R (right). Push the switch once and the mirrors will fold in, pushing the switch a second time will return the mirrors to the normal driving position.

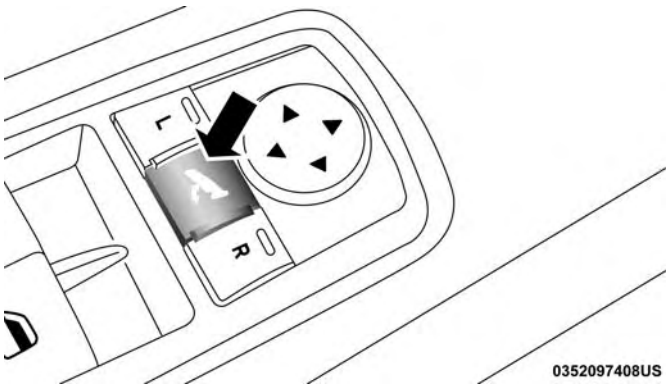

Power Folding Mirror Switch

NOTE: If the vehicle speed is greater than 10 mph (16 km/h) the folding feature will be disabled.

If the mirrors are in the folded position, and vehicle speed is equal or greater than 10 mph (16 km/h), they will automatically unfold.

Resetting The Power Folding Outside Mirrors

You may need to reset the power folding mirrors if the following occurs:

- The mirrors are accidentally blocked while folding.
- The mirrors are accidentally manually folded/unfolded.
- The mirrors come out of the unfolded position.
- The mirrors shake and vibrate at normal driving speeds.

To reset the power folding mirrors: fold and unfold them by pushing the button (this may require multiple button pushes). This resets them to their normal position.

Heated Mirrors — If Equipped

These mirrors are heated to melt frost or ice. This feature will be activated whenever you turn on the rear window defroster (if equipped). Refer to “Rear Window Features” in “Getting To Know Your Vehicle” for further information.

Illuminated Vanity Mirrors — If Equipped

An illuminated vanity mirror is on each sun visor. To use the mirror, rotate the sun visor down and swing the mirror cover upward. The lights will turn on automatically. Closing the mirror cover will turn off the light.

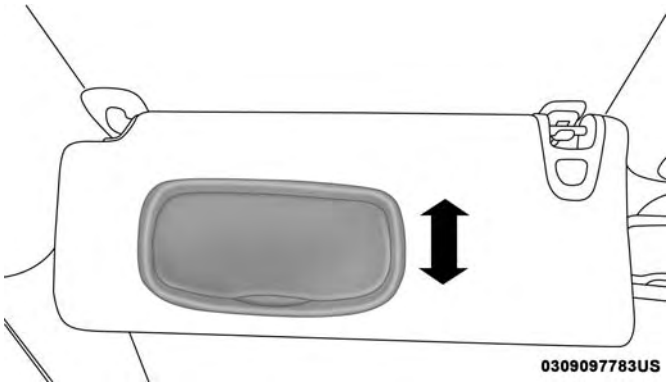

Illuminated Vanity Mirror

Sun Visor "Slide-On-Rod" Feature — If Equipped

The sun visor "Slide-On-Rod" feature allows for additional flexibility in positioning the sun visor to block out the sun.

1. Fold down the sun visor.
2. Unclip the visor from the center clip.
3. Pull the sun visor toward the inside rearview mirror to extend it.

EXTERIOR LIGHTS

Headlight Switch

The headlight switch is located on the left side of the instrument panel. This switch controls the operation of the headlights, parking lights, automatic headlights — if equipped, instrument panel lights, instrument panel light dimming, interior lights and fog lights — if equipped.

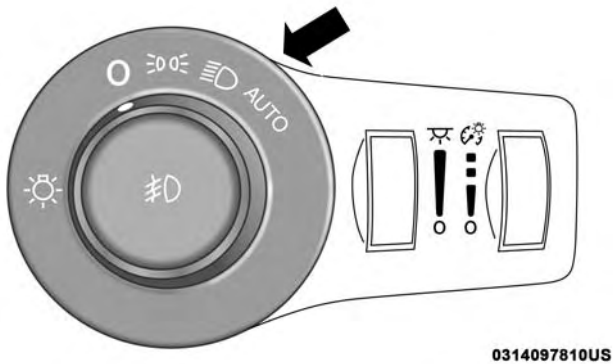

Headlight Switch

Rotate the headlight switch clockwise to the first detent for parking light and instrument panel light operation. Rotate the headlight switch to the second detent for headlight, parking light and instrument panel light operation.

Automatic Headlights — If Equipped

This system automatically turns the headlights on or off according to ambient light levels. To turn the system on, rotate the headlight switch clockwise to the last detent (AUTO position) for automatic headlight operation. When the system is on, the headlight time delay feature is also on. This means the headlights will stay on for up to 90 seconds after you place the ignition into the OFF position. To turn the automatic system off, move the headlight switch out of the AUTO position.

NOTE: The engine must be running before the headlights will come on in the automatic mode.

Headlights On With Wipers (Available With Automatic Headlights Only)

When this feature is active, the headlights will turn on after the wipers are turned on if the headlight switch is placed in the AUTO position and programmable feature is set to ON. In addition, the headlights will turn off when the wipers are turned off if they were turned on by this feature.

NOTE: The Headlights On with Wipers feature can be turned on or off using the Uconnect System. Refer to “Uconnect Settings/Customer Programmable Features” in “Multimedia” for further information.

Headlight Time Delay

This feature provides the safety of headlight illumination for up to 90 seconds (programmable) when leaving your vehicle in an unlit area.

To activate the delay feature, place the ignition in the OFF position while the headlights are still on. Then, turn off the headlights within 45 seconds. The delay interval begins when the headlight switch is turned off.

NOTE: The headlight delay feature is automatically activated if the customer leaves the headlight switch in the AUTO position while the ignition is placed in the OFF position.

If you turn the headlights or parking lights on, or place the ignition in ACC or RUN, the system will cancel the delay.

If you turn the headlights off before the ignition, they will turn off in the normal manner.

NOTE:

- The lights must be turned off within 45 seconds of placing the ignition in the OFF position to activate this feature.
- The headlight delay time is programmable using the Uconnect System, refer to “Uconnect Settings” in “Multimedia” for further information.

Lights-On Reminder

If the headlights or parking lights are on after the ignition is in the OFF position, a chime will sound to alert the driver when the driver’s door is opened.

Daytime Running Lights (DRL) — If Equipped

The Daytime Running Lights will turn on when the engine is started and remain on unless the headlamps are turned on, the parking brake is applied, or the engine is shut OFF.

NOTE: If allowed by law, in the country in which the vehicle was purchased, the Daytime Running Lights can be turned on and off using the Uconnect System, refer to “Uconnect Settings” in “Multimedia” for further information.

Fog Lights — If Equipped

The front fog light switch is built into the headlight switch.

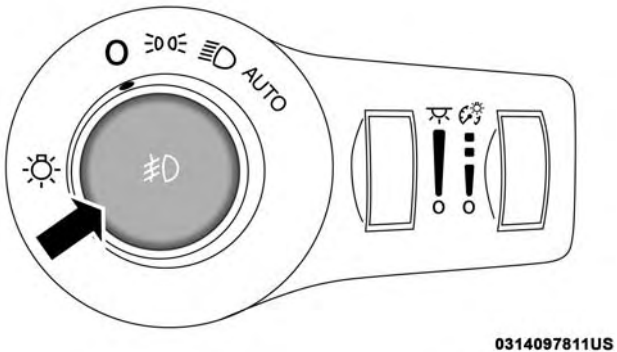

Fog Light Switch

To activate the front fog lights, turn on the parking lights or the low beam headlights and push the headlight switch. To turn off the front fog lights, either push the headlight switch a second time or turn off the headlight switch.

An indicator light in the instrument cluster illuminates when the fog lights are turned on.

NOTE: The fog lights will operate with the low beam headlights or parking lights on. However, selecting the high beam headlights will turn off the fog lights.

Multifunction Lever

The multifunction lever controls the operation of the turn signals, headlight beam selection and passing lights. The multifunction lever is located on the left side of the steering column.

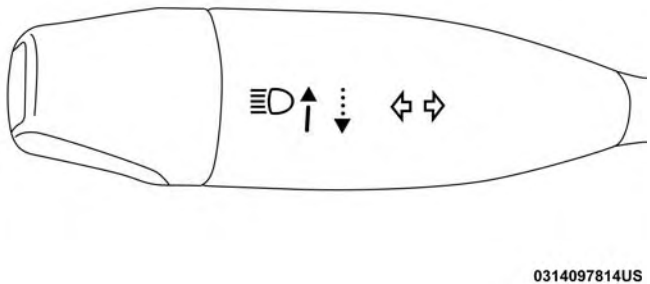

Multifunction Lever

Turn Signals

Move the multifunction lever up or down and the arrows on each side of the instrument cluster display will flash to show proper operation of the front and rear turn signal lights.

NOTE:

- If either light remains on and does not flash, or there is a very fast flash rate, check for a defective outside light bulb. If an indicator fails to light when the lever is moved, it would suggest that the indicator bulb is defective.
- A "Turn Signal On" message will appear in the instrument cluster display and a continuous chime will sound if the vehicle is driven more than 1 mile (1.6 km) with either turn signal on.
- When the Daytime Running Lights are on and a turn signal is activated, the Daytime Running Lamp will turn off on the side of the vehicle in which the turn signal is flashing. The Daytime Running Lamp will turn back on when the turn signal is turned off.

Lane Change Assist — If Equipped

Tap the lever up or down once, without moving beyond the detent, and the turn signal (right or left) will flash three times then automatically turn off.

High/Low Beam Switch

Push the multifunction lever away from you to switch the headlights to high beam. Pull the multifunction lever toward you to switch the headlights back to low beam.

Flash-To-Pass

You can signal another vehicle with your headlights by lightly pulling the multifunction lever toward you. This will cause the headlights to turn on at high beam and remain on until the lever is released.

Automatic High Beam Headlamp Control — If Equipped

The Automatic High Beam Headlamp Control system provides increased forward lighting at night by automating high beam control through the use of a digital camera mounted on the inside rearview mirror. This camera detects vehicle specific light and automatically switches from high beams to low beams until the approaching vehicle is out of view.

NOTE:

- The Automatic High Beam Headlamp Control can be turned on or off using the Uconnect System. Refer to "Uconnect Settings" in "Multimedia" for further information.
- Broken, muddy, or obstructed headlights and taillights of vehicles in the field of view will cause headlights to remain on longer (closer to the vehicle). Also, dirt, film, and other obstructions on the windshield or camera lens will cause the system to function improperly.

Battery Saver Feature

To protect the battery, the interior lights will turn off automatically 10 minutes after the ignition switch is moved to the LOCK position. This will occur if the interior lights were switched on manually or are on because a door is open.

INTERIOR LIGHTS

The interior lights come on when a door is opened.

To protect the battery, the interior lights will turn off automatically 10 minutes after the ignition is moved to the LOCK position. This will occur if the interior lights were switched on manually or are on because a door is open. The Battery Protection also includes the glove compartment light and the cargo light. To restore interior light operation after automatic battery protection is enabled (Lights Off), either place the ignition in the ON/RUN position or cycle the light switch.

Front Map/Reading Lights

The front map/reading lights are mounted in the overhead console. Each light can be turned on by pushing a switch on either side of the console. To turn the lights off, push the switch a second time. These lights also turn on when a door is opened, or when the unlock button on the key fob is pushed, or when the dimmer control is turned completely upward to the second detent.

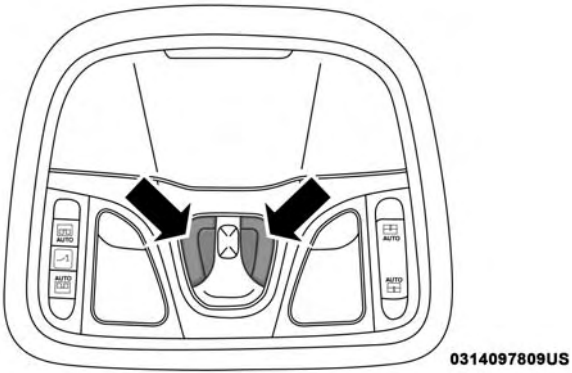

Front Map/Reading Light Switches

There are courtesy lights located above the front seats. The courtesy lights can be turned on by pushing the lens. To turn the lights off, push the lens a second time.

Instrument Panel Dimmer Control

The instrument panel dimmer control is part of the headlight switch and is located on the driver's side of the instrument panel.

With the parking lights or headlights on, rotating the instrument panel dimmer control upward will increase the brightness of the instrument panel lights and lighted cupholders — if equipped.

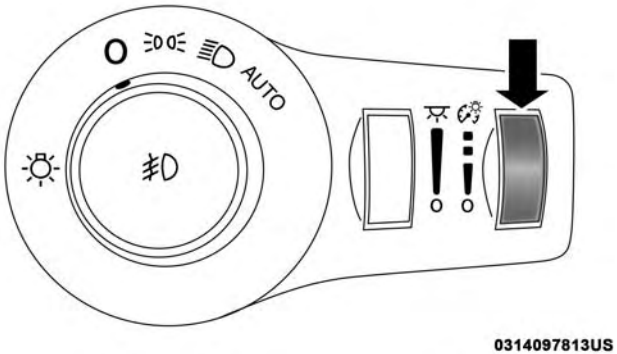

Instrument Panel Dimmer

Ambient Light Control — If Equipped

Rotate the ambient dimmer control upward or downward to increase or decrease the brightness of the ambient light located in the overhead console, door handle lights, under I/P lights, door map pocket lights, and cubby bin lights.

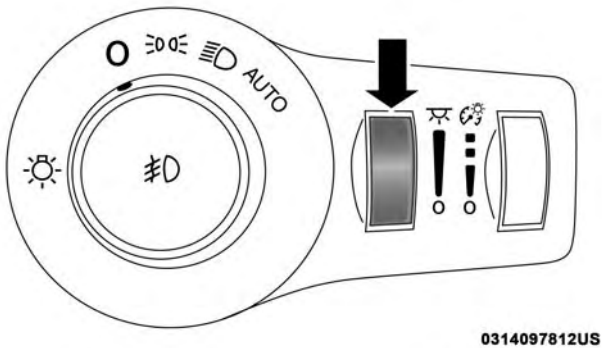

Ambient Light/Door Handle Light Dimmer

Dome Light Position

Rotate the instrument panel dimmer control completely upward to the second detent to turn on the interior lights. The interior lights will remain on when the instrument panel dimmer control is in this position.

Interior Light Defeat (Off)

Rotate the instrument panel dimmer control to the extreme bottom (O) off position. The interior lights will remain off when the doors are open.

Parade Mode (Daytime Brightness Feature)

Rotate the instrument panel dimmer control upward to the first detent. This feature brightens all text displays such as the odometer, instrument cluster display, and radio when the position lights or headlights are on.

WINDSHIELD WIPERS AND WASHERS

The windshield wiper/washer controls are located on the windshield wiper/washer lever on the right side of the steering column. The front wipers are operated by rotating a switch, located on the end of the lever. For information on the rear wiper/washer, refer to “Rear Window Features” in this section.

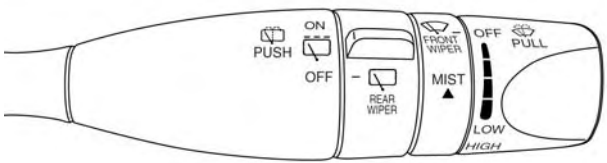

0312101524NA

Windshield Wiper/Washer Lever

Windshield Wiper Operation

Rotate the end of the lever to one of the first four detent positions for intermittent settings, the fifth detent for low wiper operation and the sixth detent for high wiper operation.

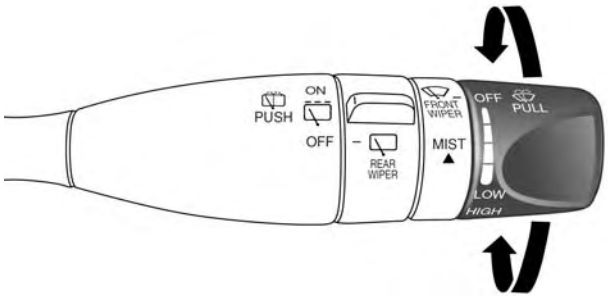

0312101525NA

Windshield Wiper Operation

CAUTION!

Always remove any buildup of snow that prevents the windshield wiper blades from returning to the "park" position. If the windshield wiper switch is turned off, and the blades cannot return to the "park" position, damage to the wiper motor may occur.

Windshield Washer Operation

To use the washer, pull the lever rearward toward you and hold while spray is desired. If the lever is pulled while in the intermittent setting, the wipers will turn on and operate for several wipe cycles after the lever is released, and then resume the intermittent interval previously selected.

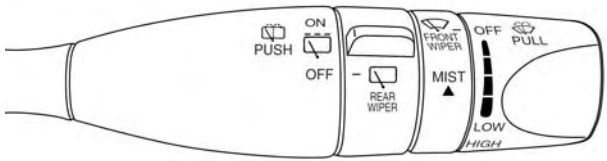

0312101524NA

Windshield Washer Operation

If the lever is pulled while the wipers are in the off position, the wipers will operate for several wipe cycles, then turn off.

WARNING!

Sudden loss of visibility through the windshield could lead to a collision. You might not see other vehicles or other obstacles. To avoid sudden icing of the windshield during freezing weather, warm the windshield with the defroster before and during windshield washer use.

Mist

Use the Mist feature when weather conditions make occasional usage of the wipers necessary. Push the lever upward to the MIST position and release for a single wiping cycle.

NOTE: The mist feature does not activate the washer pump; therefore, no washer fluid will be sprayed on the windshield. The wash function must be used in order to spray the windshield with washer fluid.

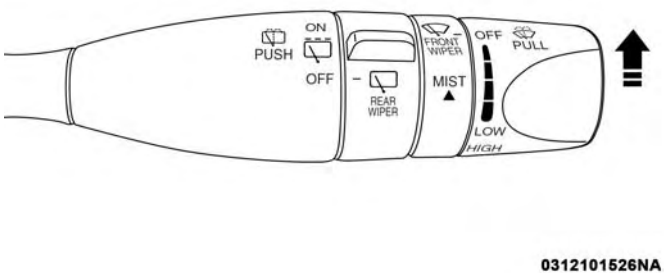

Mist Control

Rain Sensing Wipers — If Equipped

This feature senses moisture on the windshield and automatically activates the wipers for the driver. The feature is especially useful for road splash or overspray from the windshield washers of the vehicle ahead. Rotate the end of the multifunction lever to one of four settings to activate this feature.

The sensitivity of the system can be adjusted with the multifunction lever. Wiper delay position one is the least sensitive, and wiper delay position four is the most sensitive. Setting three should be used for normal rain conditions. Settings one and two can be used if the driver desires less wiper sensitivity. Setting four can be used if the driver desires more sensitivity. Place the wiper switch in the OFF position when not using the system.

NOTE:

- The Rain Sensing feature will not operate when the wiper switch is in the low or high-speed position.
- The Rain Sensing feature may not function properly when ice or dried salt water is present on the windshield.
- Use of Rain-X or products containing wax or silicone may reduce Rain Sensing performance.

- The Rain Sensing feature can be turned on and off using the Uconnect System, refer to "Uconnect Settings" in "Multimedia" for further information.

The Rain Sensing system has protection features for the wiper blades and arms, and will not operate under the following conditions:

- **Low Ambient Temperature** — When the ignition is first turned ON, the Rain Sensing system will not operate until the wiper switch is moved, vehicle speed is greater than 3 mph (5 km/h) or the outside temperature is greater than 32°F (0°C).
- **Transmission In NEUTRAL Position** — When the ignition is ON, and the automatic transmission is in the NEUTRAL position, the Rain Sensing system will not operate until the wiper switch is moved, vehicle speed is greater than 3 mph (5 km/h) or the gear selector is moved out of the NEUTRAL position.

Remote Start Mode Inhibit — On vehicles equipped with Remote Starting system, Rain Sensing wipers are not operational when the vehicle is in the remote start mode. Once the operator is in the vehicle and has placed the ignition switch in the RUN position, rain sensing wiper operation can resume, if it has been selected, and no other inhibit conditions (mentioned previously) exist.

Windshield Wiper De-Icer — If Equipped

Your vehicle may be equipped with a Windshield Wiper De-Icer feature that may be activated under the following conditions:

- **Activation By Front Defrost** — The Windshield Wiper De-Icer shall be activated automatically in the case of a cold weather manual start with full front defrost, and when the ambient temperature is below 33° F (0.6° C).
- **Activation By Rear Defrost** — The Windshield Wiper De-Icer shall be activated automatically when the rear defrost is turned on and when the ambient temperature is below 33° F (0.6° C).
- **Activation By Remote Start Operation** — When remote start is active and the outside ambient temperature is less than 33° F (0.6° C), the Windshield Wiper De-Icer shall be enabled. On exiting remote start resume previous operation except, if the Windshield Wiper De-Icer timer and operation shall continue.

Intermittent Wiper System

Use one of the four intermittent wiper settings when weather conditions make a single wiping cycle, with a variable delay between cycles, desirable. At driving speeds above 10 mph (16 km/h), the delay can be regulated from

a maximum of approximately 18 seconds between cycles (first detent), to a cycle every one second (fourth detent).

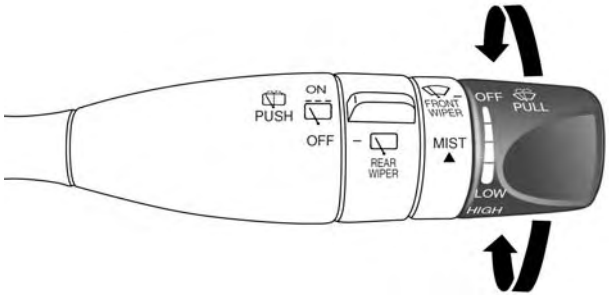

0312101525NA

Intermittent Wiper Operation

NOTE: If the vehicle is moving less than 10 mph (16 km/h), delay times will be doubled.

Rear Window Features

Rear Window Wiper/Washer

The rear wiper/washer controls are located on the windshield wiper/washer lever on the right side of the steering column. The rear wiper/washer is operated by rotating a switch, located at the middle of the lever.

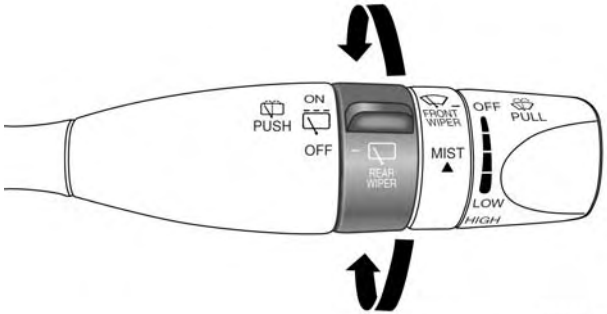

0312101527NA

Rear Wiper/Washer Control

Rotate the center portion of the lever upward to the first detent for intermittent operation and to the second detent for continuous rear wiper operation.

To use the washer, push the lever forward and hold while spray is desired. If the lever is pushed while in the intermittent setting, the wiper will turn on and operate for several wipe cycles after the end of the lever is released, and then resume the intermittent interval previously selected.

If the lever is pushed while the wiper is in the off position, the wiper will operate for several wipe cycles, then turn off.

NOTE: As a protective measure, the pump will stop if the switch is held for more than 20 seconds. Once the lever is released the pump will resume normal operation.

If the rear wiper is operating when the ignition is turned OFF, the wiper will automatically return to the "park" position.

Rear Window Defroster

The rear window defroster button is located on the switch bank by the manual climate controls. Push this button to turn on the rear window defroster and the heated outside mirrors. An indicator in the button will illuminate when the rear window defroster is on. The rear window defroster automatically turns off after approximately 10 minutes. For an additional five minutes of operation, push the button a second time.

NOTE:

- The Windshield Wiper De-Icer (if equipped) shall be activated automatically when the Rear Defrost is turned on and when the ambient temperature is below 33° F (0.6° C).
- To prevent excessive battery drain, use the rear window defroster only when the engine is operating.

CAUTION!

Failure to follow these cautions can cause damage to the heating elements:

- **Use care when washing the inside of the rear window. Do not use abrasive window cleaners on the interior surface of the window. Use a soft cloth and a mild washing solution, wiping parallel to the heating elements. Labels can be peeled off after soaking with warm water.**
- **Do not use scrapers, sharp instruments, or abrasive window cleaners on the interior surface of the window.**
- **Keep all objects a safe distance from the window.**

CLIMATE CONTROLS

Manual Climate Control Without A Touchscreen Overview

The controls for the manual heating and air conditioning system in this vehicle consist of a series of outer rotary dials and inner push knobs. These comfort controls can be set to obtain desired interior conditions.

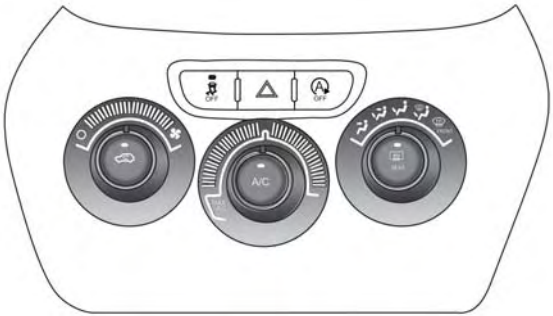

0313100283US

Manual Climate Controls Without A Touchscreen

Manual Climate Control Without A Touchscreen Descriptions

Icon	Description
	Blower Control Use this control to regulate the amount of air forced through the system in any mode you select. The blower speed increases as you move the control clockwise from the off position. **NOTE:** Depending on the configuration, your vehicle may be equipped with four blower speeds.
	Temperature Control Use this control to regulate the temperature of the air inside the passenger compartment. Rotating the knob counterclockwise, from top center into the blue area of the scale, indicates cooler temperatures. Rotating the knob clockwise, into the red area, indicates warmer temperatures.

Icon	Description
	Modes Control Knob Turn the knob to adjust airflow distribution. The airflow distribution mode can be adjusted so air comes from the instrument panel outlets, floor outlets, defrost outlets and demist outlets.
Panel Mode 	**Panel Mode** Air comes from the outlets in the instrument panel. Each of these outlets can be individually adjusted to direct the flow of air. The air vanes of the center outlets and outboard outlets can be moved up and down or side to side to regulate airflow direction. There is a shut off wheel located below the air vanes to shut off or adjust the amount of airflow from these outlets.
Bi-Level Mode 	**Bi-Level Mode** Air comes from the instrument panel outlets and floor outlets. A slight amount of air is directed through the defrost and side window demister outlets. **NOTE:** BI-LEVEL mode is designed under comfort conditions to provide cooler air out of the panel outlets and warmer air from the floor outlets.
Floor Mode 	**Floor Mode** Air comes from the floor outlets. A slight amount of air is directed through the defrost and side window demister outlets.
Mix Mode 	**Mix Mode** Air is directed through the floor, defrost, and side window demister outlets. This setting works best in cold or snowy conditions that require extra heat to the windshield. This setting is good for maintaining comfort while reducing moisture on the windshield.

Icon	Description
	A/C Button Push the A/C button to engage the Air Conditioning (A/C). A LED will illuminate when the A/C system is engaged.
	Recirculation Button Push and release this button to change the system between recirculation mode and outside air mode. Recirculation can be used when outside conditions such as smoke, odors, dust, or high humidity are present. **NOTE:** • Continuous use of the Recirculation mode may make the inside air stuffy and window fogging may occur. Extended use of this mode is not recommended. • The use of the Recirculation mode in cold or damp weather could cause windows to fog on the inside, because of moisture buildup inside the vehicle. Select the outside air position for maximum defogging. • Recirculation can be used in all modes except for Defrost. • The A/C can be deselected manually without disturbing the mode control selection.
FRONT	**Front Defrost Setting** Turn the Mode Control knob to the Front Defrost position. Air comes from the windshield and side window demist outlets. When the defrost setting is selected, the blower level will increase. Use Defrost mode with maximum temperature settings for best windshield and side window defrosting and defogging.

Icon	Description
REAR	**Rear Defrost Button** Push and release the Rear Defrost Control button to turn on the rear window defroster and the heated outside mirrors (if equipped). An indicator will illuminate when the rear window defroster is on. The rear window defroster automatically turns off after ten minutes.

Economy Mode

If ECONOMY mode is desired, push the A/C button to turn off the LED indicator and the A/C compressor. Rotate the temperature control knob to the desired temperature. Also, make sure to select only Panel, Bi-Level, or Floor modes.

Stop/Start System — If Equipped

While in an Autostop, the Climate Controls system may automatically adjust airflow to maintain cabin comfort. Customer settings will be maintained upon return to an engine running condition.

Windshield Wiper De-icer — If Equipped

The windshield wiper de-icer is a heating element located at the base of the windshield.

It operates automatically once the following conditions are met:

- *Activation By Front Defrost*

The wiper de-icer activates automatically during a cold weather manual start with **full defrost,** and when the **ambient temperature is below 33° F (0.6° C)**.

- *Activation By Rear Defrost*

The wiper de-icer activates automatically when the Rear Defrost is operating and the **ambient temperature is below 33° F (0.6° C)**.

- *Activation By Remote Start Operation*

When the Remote Start is activated and the **outside ambient temperature is less than 33° F (0.6° C)** the windshield wiper de-icer is activated. Upon exiting Remote Start, the climate control functions will resume their previous operation except, if the de-icer is active, the de-icer timer and operation will continue.

CAUTION!

Failure to follow these cautions can cause damage to the heating elements:

- **Use care when washing the inside of the rear window. Do not use abrasive window cleaners on the interior surface of the window. Use a soft cloth and a mild washing solution, wiping parallel to the heating elements. Labels can be peeled off after soaking with warm water.**
- **Do not use scrapers, sharp instruments, or abrasive window cleaners on the interior surface of the window.**
- **Keep all objects a safe distance from the window.**

Climate Controls With A Touchscreen Overview

0313100277US

5.0 With Manual Temperature Controls

0313102572NA

8.4/8.4 NAV With Manual Temperature Controls

5.0 With Automatic Temperature Controls

8.4/8.4 NAV With Automatic Temperature Controls

Climate Control With A Touchscreen Descriptions

Icon	Description
MAX A/C	**MAX A/C Button** Press and release the button on the touchscreen, or push and release the button on the faceplate, to change the current setting, the indicator illuminates when A/C is on.
A/C	**A/C Button** Press and release to change the current setting, the indicator illuminates when A/C is on. Performing this function again will cause the A/C operation to switch into manual mode and the A/C indicator will turn off.
	Recirculation Button Press and release this button to change the system between recirculation mode and outside air mode. Recirculation can be used when outside conditions such as smoke, odors, dust, or high humidity are present. **NOTE:** • Continuous use of the Recirculation mode may make the inside air stuffy and window fogging may occur. Extended use of this mode is not recommended. • The use of the Recirculation mode in cold or damp weather could cause windows to fog on the inside, because of moisture buildup inside the vehicle. Select the outside air position for maximum defogging. • Recirculation can be used in all modes except for Defrost. • The A/C can be deselected manually without disturbing the mode control selection.

Icon	Description
AUTO	**AUTO Button — If Equipped** Automatically controls the interior cabin temperature by adjusting airflow distribution and amount. Performing this function will cause the system to switch between manual mode and automatic modes. Refer to “Automatic Operation” for more information.
FRONT	**Front Defrost Button** Press and release the touchscreen button, or push and release the button on the faceplate, to change the current airflow setting to Defrost mode. The indicator illuminates when this feature is on. Air comes from the windshield and side window demist outlets. When the defrost button is selected, the blower level may increase. Use Defrost mode with maximum temperature settings for best windshield and side window defrosting and defogging. When toggling the front defrost mode button, the climate system will return to the previous setting.
REAR	**Rear Defrost Button** Push and release the button on the touchscreen, or push and release the button on the faceplate, to turn on the rear window defroster and the heated outside mirrors (if equipped). An indicator will illuminate when the rear window defroster is on. The rear window defroster automatically turns off after ten minutes.

Icon	Description
Uconnect 5.0 Temp 70 78 Uconnect 8.4	**Driver and Passenger Temperature Up and Down Buttons** Provides the driver and passenger with independent temperature control. Push the up arrow button on the faceplate, press the up arrow button on the touchscreen, or press and slide the temperature bar towards the red arrow button on the touchscreen for warmer temperature settings. Push the down arrow button on the faceplate, press the down arrow button on the touchscreen, or press and slide the temperature bar towards the blue arrow button on the touchscreen for cooler temperature settings. When the SYNC feature is active, the passenger's temperature will move up and down with the driver's temperature, when it is increased and decreased, respectively. **NOTE:** The numbers within the temperature display will only appear if the system is equipped with an automatic climate control system.
SYNC	**SYNC Button — If Equipped** Press the SYNC button on the touchscreen to toggle the SYNC feature on/off. The SYNC indicator is illuminated when this feature is enabled. SYNC is used to synchronize the passenger temperature setting with the driver temperature setting. Changing the passenger's temperature setting while in SYNC will automatically exit this feature.

Icon	Description
Faceplate Knob **Touchscreen Buttons** 	**Blower Control** Blower Control is used to regulate the amount of air forced through the climate system. There are seven blower speeds available. Adjusting the blower will cause automatic mode to switch to manual operation. The speeds can be selected using either the blower control knob on the faceplate or the buttons on the touchscreen. • **Faceplate:** The blower speed increases as you turn the blower control knob clockwise from the lowest blower setting. The blower speed decreases as you turn the blower control knob counterclockwise. • **Touchscreen:** Use the small blower icon to reduce the blower setting and the large blower icon to increase the blower setting. Blower can also be selected by pressing the blower bar area between the icons.
Panel Mode 	**Panel Mode** Air comes from the outlets in the instrument panel. Each of these outlets can be individually adjusted to direct the flow of air. The air vanes of the center outlets and outboard outlets can be moved up and down or side to side to regulate airflow direction. There is a shut off wheel located below the air vanes to shut off or adjust the amount of airflow from these outlets.
Bi-Level Mode 	**Bi-Level Mode** Air comes from the instrument panel outlets and floor outlets. A slight amount of air is directed through the defrost and side window demister outlets. **NOTE:** BI-LEVEL mode is designed under comfort conditions to provide cooler air out of the panel outlets and warmer air from the floor outlets.

Icon	Description
Floor Mode	**Floor Mode** Air comes from the floor outlets. A slight amount of air is directed through the defrost and side window demister outlets.
Mix Mode	**Mix Mode** Air is directed through the floor, defrost, and side window demister outlets. This setting works best in cold or snowy conditions that require extra heat to the windshield. This setting is good for maintaining comfort while reducing moisture on the windshield.
OFF	**Climate Control OFF Button** Press and release this button to turn the Climate Controls off.

CAUTION!

Failure to follow these cautions can cause damage to the heating elements:

- **Use care when washing the inside of the rear window. Do not use abrasive window cleaners on the interior surface of the window. Use a soft cloth and a mild washing solution, wiping parallel to the heating elements. Labels can be peeled off after soaking with warm water.**

(Continued)

CAUTION! *(Continued)*

- **Do not use scrapers, sharp instruments, or abrasive window cleaners on the interior surface of the window.**
- **Keep all objects a safe distance from the window.**

Climate Control Functions

A/C (Air Conditioning)

The Air Conditioning (A/C) button allows the operator to manually activate or deactivate the air conditioning system. When the air conditioning system is turned on, cool dehumidified air will flow through the outlets into the cabin. For improved fuel economy, press the A/C button to turn off the air conditioning and manually adjust the blower and airflow mode settings. Also, make sure to select only Panel, Bi-Level, or Floor modes.

NOTE:

- If fog or mist appears on the windshield or side glass, select Defrost mode, and increase blower speed if needed.
- If your air conditioning performance seems lower than expected, check the front of the A/C condenser (located in front of the radiator), for an accumulation of dirt or insects. Clean with a gentle water spray from the front of the radiator and through the condenser.

MAX A/C

MAX A/C sets the control for maximum cooling performance.

Press and release to toggle between MAX A/C and the prior settings. The button illuminates when MAX A/C is on.

In MAX A/C, the blower level and mode position can be adjusted to desired user settings. Pressing other settings will cause the MAX A/C operation to switch to the selected setting and MAX A/C to exit.

Recirculation

When outside air contains smoke, odors, or high humidity, or if rapid cooling is desired, you may wish to recirculate interior air by pressing the Recirculation control button. The Recirculation indicator will illuminate when this button is selected. Press the button a second time to turn off the Recirculation mode and allow outside air into the vehicle.

NOTE: In cold weather, use of Recirculation mode may lead to excessive window fogging. The Recirculation feature may be unavailable (button on the touchscreen greyed out) if conditions exist that could create fogging on the inside of the windshield.

Automatic Temperature Control (ATC) — If Equipped

Automatic Operation

1. Push the AUTO button on the faceplate, or the AUTO button on the touchscreen on the Automatic Temperature Control (ATC) Panel.
2. Next, adjust the temperature you would like the system to maintain by adjusting the driver and passenger temperature control buttons. Once the desired temperature is displayed, the system will achieve and automatically maintain that comfort level.
3. When the system is set up for your comfort level, it is not necessary to change the settings. You will experience the greatest efficiency by simply allowing the system to function automatically.

NOTE:

- It is not necessary to move the temperature settings for cold or hot vehicles. The system automatically adjusts the temperature, mode, and blower speed to provide comfort as quickly as possible.
- The temperature can be displayed in U.S. or Metric units by selecting the US/Metric customer-programmable feature. Refer to the “Uconnect Settings” in “Multimedia” for further information.

To provide you with maximum comfort in the Automatic mode during cold start-ups, the blower fan will remain on low until the engine warms up. The blower will increase in speed and transition into Auto mode.

Manual Operation Override

This system offers a full complement of manual override features. The AUTO symbol in the front ATC display will be turned off when the system is being used in the manual mode.

NOTE: The system will not automatically sense the presence of fog, mist or ice on the windshield. Defrost mode must be manually selected to clear the windshield and side glass.

Operating Tips

NOTE: Refer to the chart at the end of this section for suggested control settings for various weather conditions.

Summer Operation

The engine cooling system must be protected with a high-quality antifreeze coolant to provide proper corrosion protection and to protect against engine overheating. OAT coolant (conforming to MS.90032) is recommended.

Winter Operation

To ensure the best possible heater and defroster performance, make sure the engine cooling system is functioning properly and the proper amount, type, and concentration of coolant is used. Use of the Air Recirculation mode during Winter months is not recommended, because it may cause window fogging.

Vacation/Storage

Before you store your vehicle, or keep it out of service (i.e., vacation) for two weeks or more, run the air conditioning system at idle for about five minutes, in fresh air with the blower setting on high. This will ensure adequate system lubrication to minimize the possibility of compressor damage when the system is started again.

Window Fogging

Vehicle windows tend to fog on the inside in mild, rainy and/or humid weather. To clear the windows, select Defrost or Mix mode and increase the front blower speed. Do not use the Recirculation mode without A/C for long periods, as fogging may occur.

Outside Air Intake

Make sure the air intake, located directly in front of the windshield, is free of obstructions such as leaves. Leaves collected in the air intake may reduce airflow, and if they enter the plenum, they could plug the water drains. In winter months, make sure the air intake is clear of ice, slush, and snow.

Cabin Air Filter

The climate control system filters out dust and pollen from the air. Contact your authorized dealer to service your cabin air filter, and to have it replaced when needed.

Operating Tips Chart

WEATHER	CONTROL SETTINGS
Hot weather and vehicle interior is very hot	Set the mode control to , on, and blower on high. Roll down the windows for a minute to flush out the hot air. Once comfort is achieved adjust controls for comfort.
Warm weather	Turn on and set the mode control to the position.
Cool Sunny	Operate in position.
Cool & Humid conditions	Set the mode control to and turn on to keep windows clear.
Cold Weather	Set the mode control to the position. If windshield fogging starts to occur, move the control towards the position.

8000cb71

WINDOWS

Power Window Controls

The window controls on the driver's door control all the door windows.

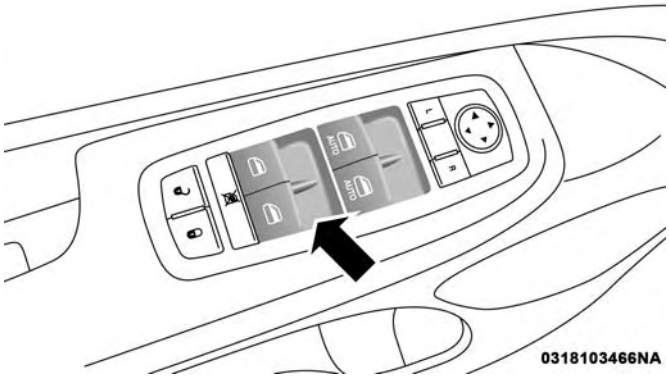

Power Window Switches

There are single window controls on each passenger door trim panel, which operate the passenger door windows. The window controls will operate only when the ignition is in the ACC or ON/RUN position.

NOTE: For vehicles equipped with the Uconnect, the power window switches will remain active for up to 10 minutes after the ignition is cycled to the OFF position. Opening either front door will cancel this feature. The time is programmable. Refer to "Uconnect Settings" in "Multimedia" for further information.

WARNING!

Never leave children unattended in a vehicle, and do not let children play with power windows. Do not leave the key fob in or near the vehicle, or in a location accessible to children, and do not leave the ignition of a vehicle equipped with Keyless Enter-N-Go in the ACC or ON/RUN mode. Occupants, particularly unattended children, can become entrapped by the windows while operating the power window switches. Such entrapment may result in serious injury or death.

Auto-Down Feature

The driver door power window switch and the passenger door power window switches have an Auto-Down feature. Push the window switch down, for a short period of time, and release and the window will go down automatically.

To open the window part way, push the window switch down briefly and release it when you want the window to stop.

To stop the window from going all the way down during the Auto-Down operation, pull up on the switch briefly.

Auto-Up Feature With Anti-Pinch Protection

Lift the window switch up, for a short period of time, and release and the window will go up automatically.

To stop the window from going all the way up during the Auto-Up operation, push down on the switch briefly.

To close the window part way, lift the window switch briefly and release it when you want the window to stop.

NOTE:

- If the window runs into any obstacle during auto-closure, it will reverse direction and then go back down. Remove the obstacle and use the window switch again to close the window.
- Any impact due to rough road conditions may trigger the auto-reverse function unexpectedly during auto-closure. If this happens, pull the switch lightly and hold to close the window manually.

WARNING!

There is no anti-pinch protection when the window is almost closed. To avoid personal injury be sure to clear your arms, hands, fingers and all objects from the window path before closing.

Reset Auto-Up

Should the Auto-Up feature stop working, the window probably needs to be reset. To reset Auto-Up:

1. Pull the window switch up to close the window completely and continue to hold the switch up for an additional two seconds after the window is closed.
2. Push the window switch down firmly to open the window completely and continue to hold the switch down for an additional two seconds after the window is fully open.

Window Lockout Switch

The window lockout switch on the driver's door trim panel allows you to disable the window controls on the rear passenger doors. To disable the window controls, push and release the window lockout button (the indicator light on the button with turn on). To enable the window controls, push and release the window lockout button again (the indicator light on the button will turn back off).

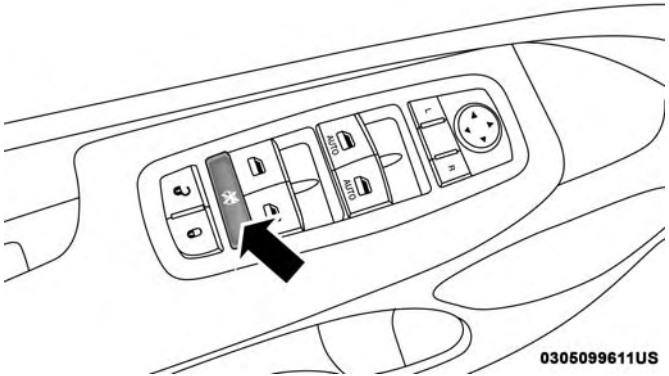

Window Lockout Switch

POWER SUNROOF WITH POWER SHADE — IF EQUIPPED

The power sunroof switches are located to the left between the sun visors on the overhead console.

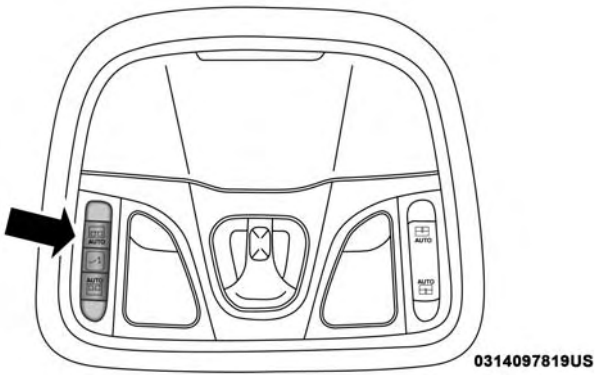

Power Sunroof Switches

The power shade switches are located to the right between the sun visors on the overhead console.

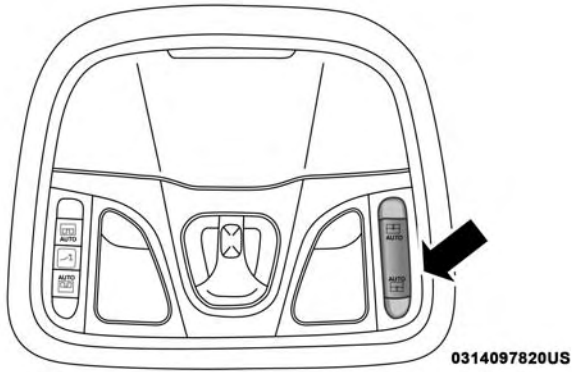

Power Shade Switches

WARNING!

- **Never leave children unattended in a vehicle, or with access to an unlocked vehicle. Never leave the key fob in or near the vehicle, or in a location accessible to children. Do not leave the ignition of a vehicle equipped with Keyless Enter-N-Go in the ACC or ON/RUN mode. Occupants, particularly unattended**

(Continued)

WARNING! ***(Continued)***

children, can become entrapped by the power sunroof while operating the power sunroof switch. Such entrapment may result in serious injury or death.

- **In a collision, there is a greater risk of being thrown from a vehicle with an open sunroof. You could also be seriously injured or killed. Always fasten your seat belt properly and make sure all passengers are also properly secured.**
- **Do not allow small children to operate the sunroof. Never allow your fingers, other body parts, or any object, to project through the sunroof opening. Injury may result.**

Opening Sunroof

Express

A comfort stop position and full open position are the programmed automatic stops for the sunroof open positions. The comfort stop position has been optimized to minimize wind buffeting.

Push the switch rearward and release it within one-half second. The sunroof will open automatically to the comfort stop position (if the sunshade is in the closed position when the operation is initiated the sunshade will automatically open to the half open position prior to the sunroof opening). Push the switch rearward and release it again, the sunroof will open to the full open position and automatically stop. This is called "Express Open". During Express Open operation, any movement of the sunroof switch will stop the sunroof.

Manual Mode

A comfort stop position is a programmed automatic stop for the sunroof open position. The comfort stop position has been optimized to minimize wind buffeting.

To open the sunroof, push and hold the switch rearward. The sunroof will stop automatically at the comfort stop position (if the sunshade is in the closed position when the operation is initiated the sunshade will automatically open to the half open position prior to the sunroof opening). Push and hold the switch rearward again, the sunroof will open to the full open position and automatically stop. Any release of the switch will stop the movement. The sunroof and sunshade will remain in a partially opened condition until the switch is pushed and held rearward again.

Closing Sunroof

Express

Push the switch forward and release it within one-half second and the sunroof will close automatically from any position. The sunroof will close fully and stop automatically. This is called “Express Close.” During Express Close operation, any other actuation of the switch will stop the sunroof.

Manual Mode

To close the sunroof, push and hold the switch in the forward position. Any release of the switch will stop the movement and the sunroof will remain in a partially closed condition until the sunroof switch is pushed again.

Venting Sunroof — Express

Push and release the ″Vent″ button within one-half second and the sunroof will open to the vent position. This is called “Express Vent”, and it will occur regardless of sunroof position. During Express Vent operation, any movement of the switch will stop the sunroof.

NOTE: If the sunshade is in the closed position when the vent switch is pushed, the sunshade will automatically cycle to the halfway open position prior to the sunroof opening to the Vent position.

Opening Power Shade

Express

Push the shade switch rearward and release it within one-half second and the shade will automatically open to the halfway position and stop automatically. Push the switch a second time from the halfway position and the shade will automatically open to the full open position and stop automatically. This is called “Express Open”. During Express Open operation, any movement of the shade switch will stop the shade.

Manual Mode

To open the shade, push and hold the switch rearward. The shade will open and stop automatically at the half-open position. Push and hold the shade switch rearward again and the shade will open automatically to the full-open position. Any release of the switch will stop the movement and the shade will remain in a partially opened condition until the switch is pushed again.

Closing Power Shade

Express

Push the switch forward and release it within one-half second and the shade will close automatically from any position. If the sunroof is completely closed the shade will close fully and stop automatically. This is called "Express Close". During Express Close operation, any movement of the switch will stop the shade.

NOTE: If the sunroof is open, the shade will close to the half-open position. Pushing the shade close button again will automatically close both the sunroof and shade completely.

Manual

To close the shade, push and hold the switch in the forward position. Any release of the switch will stop the movement and the shade will remain in a partially closed condition until the switch is pushed again.

Pinch Protect Feature

This feature will detect an obstruction in the opening of the sunroof during Express Close operation. If an obstruction in the path of the sunroof is detected, the sunroof will automatically retract. Remove the obstruction if this occurs.

NOTE: If three consecutive sunroof close attempts result in Pinch Protect reversals, Pinch Protect will disable and the sunroof must be closed in Manual Mode.

Wind Buffeting

Wind buffeting can be described as the perception of pressure on the ears or a helicopter-type sound in the ears. Your vehicle may exhibit wind buffeting with the windows down, or the sunroof (if equipped) in certain open or partially open positions. This is a normal occurrence and can be minimized. If the buffeting occurs with the rear windows open, then open the front and rear windows together to minimize the buffeting. If the buffeting occurs with the sunroof open, adjust the sunroof opening to minimize the buffeting or open any window.

Sunroof Maintenance

Use only a non-abrasive cleaner and a soft cloth to clean the glass panel.

Ignition Off Operation

The power sunroof switch will remain active for up to approximately 10 minutes after the ignition switch is turned to the OFF/LOCK position. Opening either front door will cancel this feature.

NOTE: Ignition Off time is programmable through the Uconnect System. Refer to "Uconnect Settings" in "Multimedia" for further information.

HOOD

Opening The Hood

Two latches must be released to open the hood.

1. Pull the hood release lever located under the driver's side of the instrument panel.

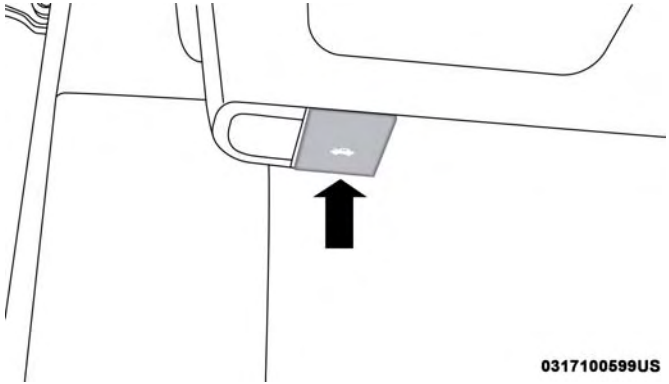

Hood Release

2. Move to the outside of the vehicle and pull the safety latch release lever forward (toward you). The safety latch release lever is located behind the front edge of the hood, slightly off-center to the right.

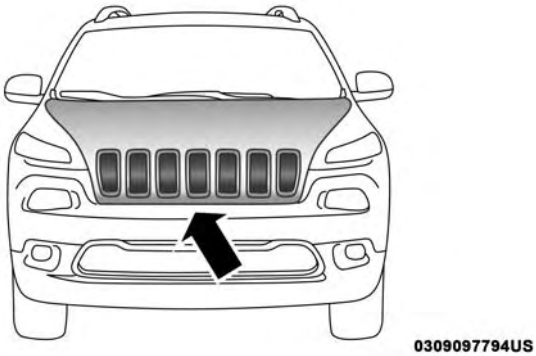

Hood Safety Latch Release Lever Location

Closing The Hood

Lower the hood to approximately 12 inches (30 cm) from the engine compartment and drop it. Make sure that the hood is completely closed.

WARNING!

Be sure the hood is fully latched before driving your vehicle. If the hood is not fully latched, it could open when the vehicle is in motion and block your vision. Failure to follow this warning could result in serious injury or death.

CAUTION!

To prevent possible damage, do not slam the hood to close it. Lower hood to approximately 12 inches (30 cm) and drop the hood to close. Make sure hood is fully closed for both latches. Never drive vehicle unless hood is fully closed, with both latches engaged.

LIFTGATE

Opening

To Unlock/Enter The Liftgate

The power liftgate may be opened by pushing the electronic liftgate release (refer to "Keyless Enter-N-Go — Passive Entry" located in "Getting To Know Your Vehicle") or by pushing the liftgate button on the key fob. Push the liftgate button on the key fob twice within five seconds to open the power liftgate. Once the liftgate is open, pushing the button twice within five seconds a second time will close the liftgate.

The power liftgate may also be opened or closed by pushing the liftgate button located on the front overhead console. If the liftgate is fully open, the liftgate can be closed by pushing the liftgate button located on the left rear trim panel, near the liftgate opening. If the liftgate is in motion, pushing the liftgate button located on the left rear trim panel will reverse the liftgate.

The liftgate passive entry unlock feature is built into the electronic liftgate release. With a valid Passive Entry key fob within 5 ft (1.5 m) of the liftgate, push the electronic liftgate release to open with one fluid motion. Push the button on the key fob twice within five seconds to release the liftgate.

NOTE: If "Unlock All Doors 1st Press" is programmed in instrument cluster display, all doors will unlock when you push the electronic release on the liftgate. If "Unlock Driver Door 1st Press" is programmed in Uconnect, the liftgate will unlock when you push the electronic release on the liftgate. Refer to "Uconnect Settings" in "Multimedia" for further information.

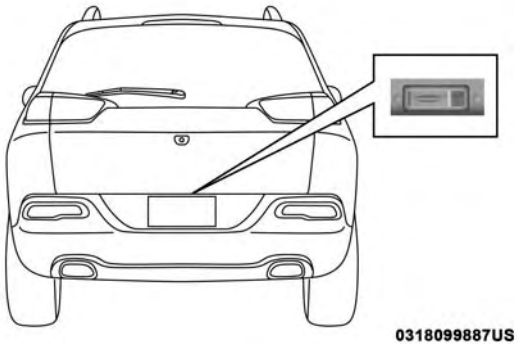

Liftgate Entry

NOTE:

- Use the power door lock switch on either front door trim panel or the key fob to lock and unlock the liftgate. The manual door locks on the doors and the driver's door lock cylinder will not lock and unlock the liftgate.
- In the event of a power malfunction to the liftgate, an emergency liftgate latch release can be used to open the liftgate. The emergency liftgate latch release can be accessed through a snap-in cover located on the liftgate trim panel.

- If liftgate is left open for an extended period of time, the liftgate may need to be closed manually to reset power liftgate functionality.

WARNING!

Driving with the liftgate open can allow poisonous exhaust gases into your vehicle. You and your passengers could be injured by these fumes. Keep the liftgate closed when you are operating the vehicle.

Closing

Grasp the liftgate closing handle and initiate lowering the liftgate. Release the handle when the liftgate takes over the closing effort.

To Lock The Liftgate

With a valid Passive Entry key fob within 5 ft (1.5 m) of the liftgate, pushing the Keyless Enter-N-Go — Passive Entry lock button located to the right of the outside handle release will lock the vehicle.

NOTE: The liftgate unlock feature is built into the electronic liftgate release.

Cargo Area Features

Cargo Load Floor

The cargo load floor system has a load capacity of 400 lbs (181 kg).

To provide additional storage area, each rear seat can be folded flat. This allows for extended cargo space and still maintains some rear seating room. Refer to “Seats” in this section for further information.

Cargo Extension Panels

Cargo extension panels can be folded and unfolded. When the rear seats are moved to the more forward positions and the rear seat backs are folded down, the extension panels (2) can be unfolded manually by hand. The extension panels can be used to extend the load floor to the rear seats and/or hide the gap between the load floor and rear seats or to assist in loading large items into the cargo area.

Cargo Tie-Down Hooks And Loops

The tie-downs located on the cargo area floor should be used to secure loads safely when the vehicle is moving.

Cargo tie-down loops are located on the trim panels.

WARNING!

- **Cargo tie-downs are not safe anchors for a child seat tether strap. In a sudden stop or accident, a tie-down could pull loose and allow the child seat to come loose. A child could be badly injured. Use only the anchors provided for child seat tethers.**
- **To help protect against personal injury, passengers should not be seated in the rear cargo area. The rear cargo space is intended for load carrying purposes only, not for passengers, who should sit in seats and use seat belts.**

The weight and position of cargo and passengers can change the vehicle center of gravity and vehicle handling. To avoid loss of control resulting in personal injury, follow these guidelines for loading your vehicle:

- **Do not carry loads that exceed the load limits described on the label attached to the left door or left door center pillar.**
- **Always place cargo evenly on the cargo floor. Put heavier objects as low and as far forward as possible.**
- **Place as much cargo as possible in front of the rear axle. Too much weight or improperly placed weight**

(Continued)

WARNING! ***(Continued)***

over or behind the rear axle can cause the vehicle to sway.

- **Do not pile luggage or cargo higher than the top of the seatback. This could impair visibility or become a dangerous projectile in a sudden stop or accident.**

Rear Storage Bins

The rear storage bins are located in the rear of the vehicle on the sides of the load floor.

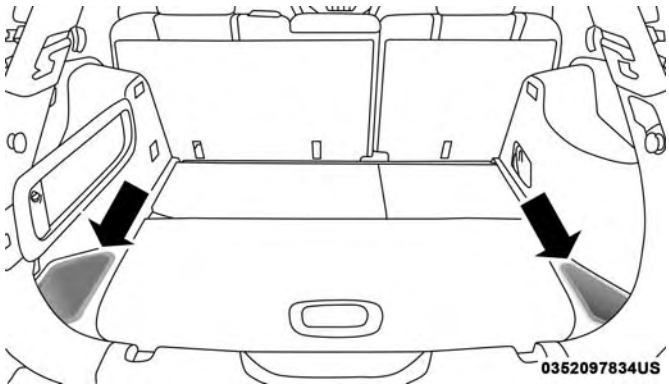

Rear Storage Bins

GARAGE DOOR OPENER — IF EQUIPPED

HomeLink replaces up to three hand-held transmitters that operate devices such as garage door openers, motorized gates, lighting or home security systems. The HomeLink unit is powered by your vehicle's 12 Volt battery.

The HomeLink buttons, located on the overhead console, designate the three different HomeLink channels. The HomeLink indicator is located above the center button.

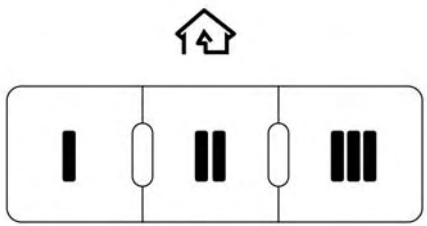

HomeLink Buttons/Overhead Console

NOTE: HomeLink is disabled when the Vehicle Security Alarm is active.

Before You Begin Programming HomeLink

Be sure that your vehicle is parked outside of the garage before you begin programming.

For more efficient programming and accurate transmission of the radio-frequency signal it is recommended that a new battery be placed in the hand-held transmitter of the device that is being programmed to the HomeLink system.

To erase the channels, place the ignition in the ON/RUN position, and push and hold the two outside HomeLink buttons (I and III) for up to 20 seconds or until the orange indicator flashes.

NOTE:

- Erasing all channels should only be performed when programming HomeLink for the first time. Do not erase channels when programming additional buttons.
- If you have any problems, or require assistance, please call toll-free 1-800-355-3515 or, on the Internet at HomeLink.com for information or assistance.

Programming A Rolling Code

For programming garage door openers that were manufactured after 1995. These garage door openers can be identified by the "LEARN" or "TRAIN" button located where the hanging antenna is attached to the garage door opener.

NOTE: It is NOT the button that is normally used to open and close the door. The name and color of the button may vary by manufacturer.

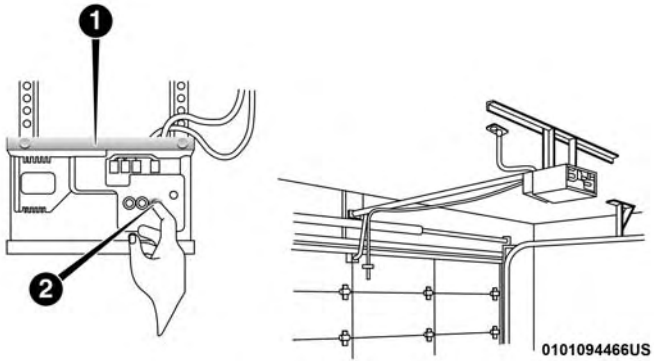

Training The Garage Door Opener

1 — Door Opener
2 — Training Button

1. Place the ignition in the ON/RUN position.
2. Place the hand-held transmitter 1 to 3 inches (3 to 8 cm) away from the HomeLink button you wish to program while keeping the HomeLink indicator light in view.
3. Push and hold the HomeLink button you want to program while you push and hold the hand-held transmitter button.

4. Continue to hold both buttons and observe the indicator light. The HomeLink indicator will flash slowly and then rapidly after HomeLink has received the frequency signal from the hand-held transmitter. Release both buttons after the indicator light changes from slow to rapid.

5. At the garage door opener motor (in the garage), locate the "LEARN" or "TRAINING" button. This can usually be found where the hanging antenna wire is attached to the garage door opener/device motor. Firmly push and release the "LEARN" or "TRAINING" button. On some garage door openers/devices there may be a light that blinks when the garage door opener/device is in the LEARN/TRAIN mode.

NOTE: You have 30 seconds in which to initiate the next step after the LEARN button has been pushed.

6. Return to the vehicle and push the programmed HomeLink button twice (holding the button for two seconds each time). If the garage door opener/device activates, programming is complete.

NOTE: If the garage door opener/device does not activate, push the button a third time (for two seconds) to complete the training.

To program the remaining two HomeLink buttons, repeat each step for each remaining button. DO NOT erase the channels.

Reprogramming A Single HomeLink Button (Rolling Code)

To reprogram a channel that has been previously trained, follow these steps:

1. Cycle the ignition to the ON/RUN position.

2. Push and hold the desired HomeLink button until the indicator light begins to flash after 20 seconds. Do not release the button.

3. Without releasing the button proceed with "Programming A Rolling Code" step 2 and follow all remaining steps."

Programming A Non-Rolling Code

For programming Garage Door Openers manufactured before 1995.

1. Cycle the ignition to the ON/RUN position.

2. Place the hand-held transmitter 1 to 3 inches (3 to 8 cm) away from the HomeLink button you wish to program while keeping the HomeLink indicator light in view.

3. Push and hold the HomeLink button you want to program while you push and hold the hand-held transmitter button.

4. Continue to hold both buttons and observe the indicator light. The HomeLink indicator will flash slowly and then rapidly after HomeLink has received the frequency signal from the hand-held transmitter. Release both buttons after the indicator light changes from slow to rapid.

5. Push and hold the programmed HomeLink button and observe the indicator light.
   - If the indicator light stays on constantly, programming is complete and the garage door/device should activate when the HomeLink button is pushed.
   - To program the two remaining HomeLink buttons, repeat each step for each remaining button. DO NOT erase the channels.

Reprogramming A Single HomeLink Button (Non-Rolling Code)

To reprogram a channel that has been previously trained, follow these steps:

1. Cycle the ignition to the ON/RUN position.

2. Push and hold the desired HomeLink button until the indicator light begins to flash after 20 seconds. Do not release the button.

3. Without releasing the button proceed with "Programming A Non-Rolling Code" step 2 and follow all remaining steps.

Canadian/Gate Operator Programming

For programming transmitters in Canada/United States that require the transmitter signals to "time-out" after several seconds of transmission.

Canadian radio frequency laws require transmitter signals to time-out (or quit) after several seconds of transmission – which may not be long enough for HomeLink to pick up the signal during programming. Similar to this Canadian law, some U.S. gate operators are designed to time-out in the same manner.

It may be helpful to unplug the device during the cycling process to prevent possible overheating of the garage door or gate motor.

1. Cycle the ignition to the ON/RUN position.

2. Place the hand-held transmitter 1 to 3 inches (3 to 8 cm) away from the HomeLink button you wish to program while keeping the HomeLink indicator light in view.
3. Continue to push and hold the HomeLink button, while you push and release ("cycle") your hand-held transmitter every two seconds until HomeLink has successfully accepted the frequency signal. The indicator light will flash slowly and then rapidly when fully trained.
4. Watch for the HomeLink indicator to change flash rates. When it changes, it is programmed. It may take up to 30 seconds or longer in rare cases. The garage door may open and close while you are programming.
5. Push and hold the programmed HomeLink button and observe the indicator light.

NOTE:

- If the indicator light stays on constantly, programming is complete and the garage door/device should activate when the HomeLink button is pushed.
- To program the two remaining HomeLink buttons, repeat each step for each remaining button. DO NOT erase the channels.

If you unplugged the garage door opener/device for programming, plug it back in at this time.

Reprogramming A Single HomeLink Button (Canadian/ Gate Operator)

To reprogram a channel that has been previously trained, follow these steps:

1. Cycle the ignition to the ON/RUN position.
2. Push and hold the desired HomeLink button until the indicator light begins to flash after 20 seconds. Do not release the button.
3. Without releasing the button proceed with "Canadian/ Gate Operator Programming" step 2 and follow all remaining steps.

Using HomeLink

To operate, push and release the programmed HomeLink button. Activation will now occur for the programmed device (i.e. garage door opener, gate operator, security system, entry door lock, home/office lighting, etc.). The hand-held transmitter of the device may also be used at any time.

Security

It is advised to erase all channels before you sell or turn in your vehicle.

To do this, push and hold the two outside buttons for 20 seconds until the orange indicator flashes. Note that all channels will be erased. Individual channels cannot be erased.

The HomeLink Universal Transceiver is disabled when the Vehicle Security Alarm is active.

Troubleshooting Tips

If you are having trouble programming HomeLink, here are some of the most common solutions:

- Replace the battery in the Garage Door Opener hand-held transmitter.
- Push the LEARN button on the Garage Door Opener to complete the training for a Rolling Code.
- Did you unplug the device for programming and remember to plug it back in?

If you have any problems, or require assistance, please call toll-free 1-800-355-3515 or, on the Internet at HomeLink.com for information or assistance.

WARNING!

- **Vehicle exhaust contains carbon monoxide, a dangerous gas. Do not run your vehicle in the garage while programming the transceiver. Exhaust gas can cause serious injury or death.**
- **Your motorized door or gate will open and close while you are programming the universal transceiver. Do not program the transceiver if people, pets or other objects are in the path of the door or gate. Only use this transceiver with a garage door opener that has a "stop and reverse" feature as required by Federal safety standards. This includes most garage door opener models manufactured after 1982. Do not use a garage door opener without these safety features. Call toll-free 1-800-355-3515 or, on the Internet at HomeLink.com for safety information or assistance.**

General Information

The following regulatory statement applies to all Radio Frequency (RF) devices equipped in this vehicle:

This device complies with Part 15 of the FCC Rules and with Industry Canada license-exempt RSS standard(s). Operation is subject to the following two conditions:

1. This device may not cause harmful interference, and
2. This device must accept any interference received, including interference that may cause undesired operation.

NOTE: Changes or modifications not expressly approved by the party responsible for compliance could void the user's authority to operate the equipment.

INTERNAL EQUIPMENT

Storage

Glove Compartment

The glove compartment is located on the passenger side of the instrument panel.

To open the glove compartment, pull the release handle.

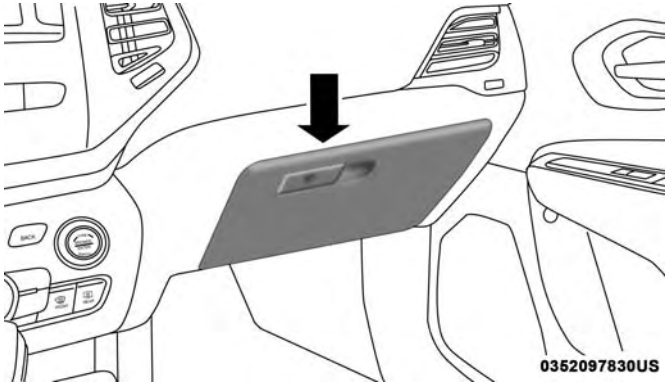

Glove Compartment

There is also an additional storage bin located above the instrument panel in the center of the dash.

Console Storage Compartment

Some vehicles may be equipped with a wireless charging pad located in the upper portion of the center console. Refer to "Wireless Charging Pad — If Equipped" in this section for more information.

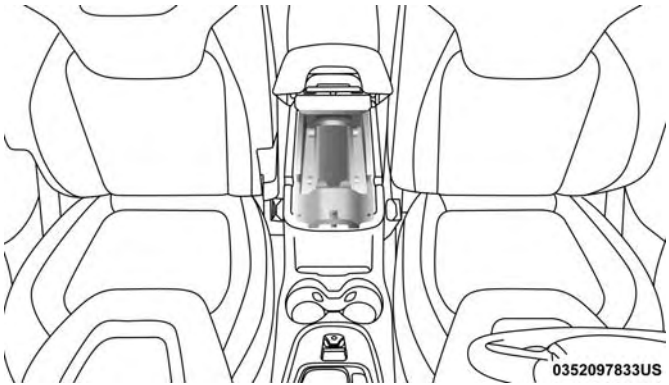

Upper Console Charging Pad

To open, pull up on the latch and lift the cover.

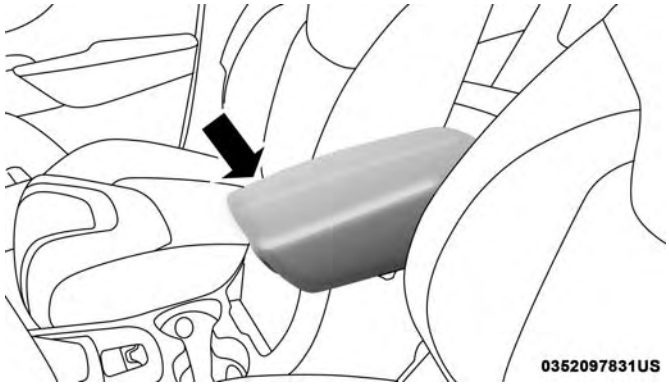

Center Console

The center console has a storage area which can hold cell phones, PDAs, and other small items.

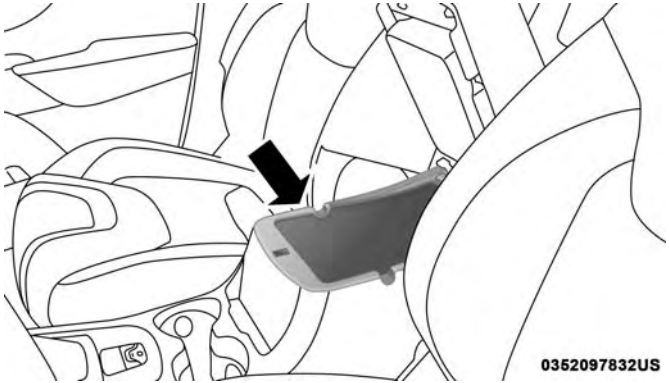

Center Console Storage

WARNING!

Do not operate this vehicle with a console compartment lid in the open position. Driving with the console compartment lid open may result in injury in a collision.

Flip 'n Stow Front Passenger Seat Storage — If Equipped

Some models may be equipped with storage under the front passenger seat cushion. Pull upward on the seat cushion loop to open the storage compartment.

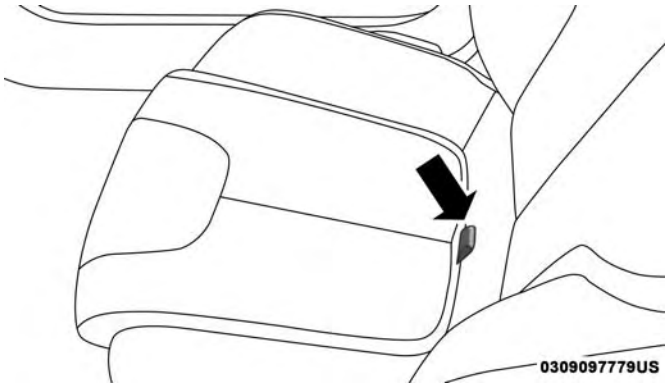

Passenger Seat Cushion Loop

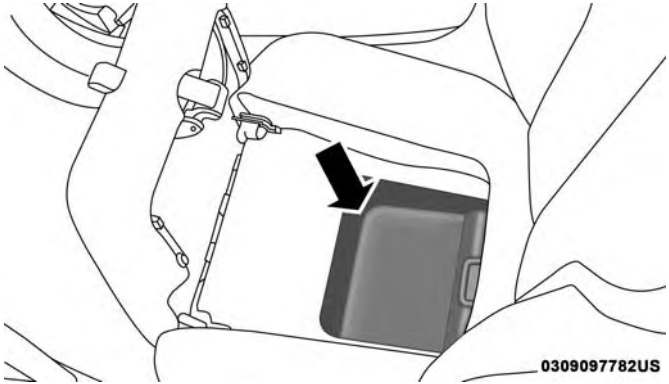

Passenger Seat Cushion Storage Compartment

NOTE: Make sure that objects inside the bin do not interfere with the latch before closing the seat. Push the seat cushion downward after closing it to make sure it latches to the base.

WARNING!
Be certain that the seat cushion is locked securely into position before using the seat. Otherwise, the seat will not provide the proper stability for passengers. An improperly latched seat cushion could cause serious injury.

Cupholders

There are two cupholders for the front seat passengers, located in the center console.

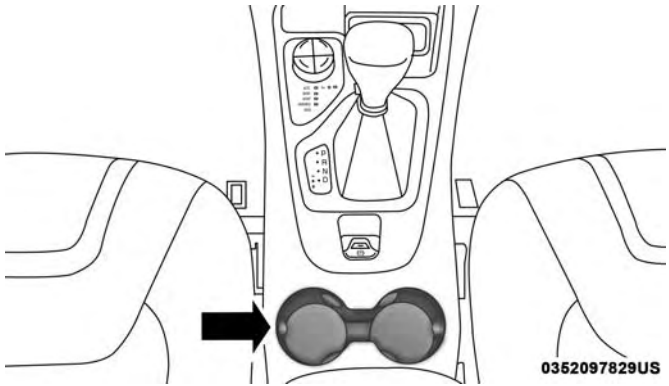

Front Cupholders

There are two cupholders for the rear seat passengers, located in the center armrest.

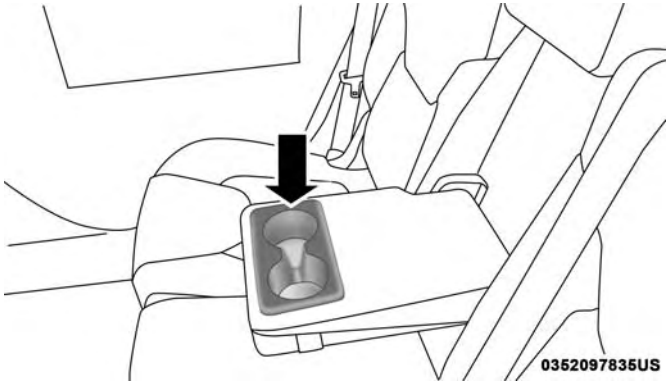

Rear Cupholders

Sun Visors

An illuminated vanity mirror is on each sun visor. To use the mirror, rotate the sun visor down and swing the mirror cover upward. The lights will turn on automatically. Closing the mirror cover will turn off the light.

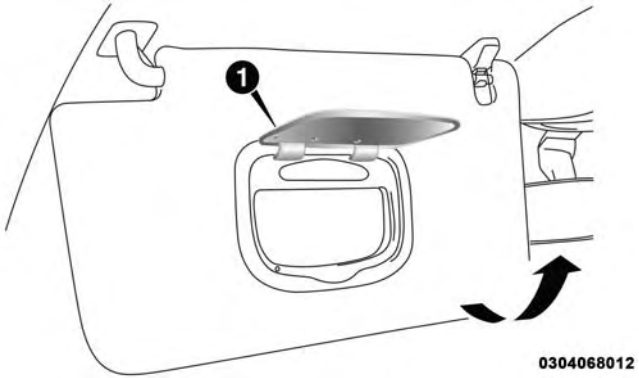

Illuminated Vanity Mirror

1 — Sun Visor Mirror Cover

Power Outlets

Your vehicle is equipped with 12 Volt (13 Amp) power outlets that can be used to power cellular phones, small electronics and other low powered electrical accessories. The power outlets are labeled with either a "key" or a "battery" symbol to indicate how the outlet is powered. Power outlets labeled with a "key" are powered when the ignition switch is in the ON or ACC position, while the outlets labeled with a "battery" are connected directly to the battery and powered at all times.

NOTE:

- All accessories connected to the "battery" powered outlets should be removed or turned off when the vehicle is not in use to protect the battery against discharge.
- To ensure proper cigar lighter operation, a Mopar knob and element must be used.

CAUTION!

Power outlets are designed for accessory plugs only. Do not insert any other object in the power outlets as

(Continued)

CAUTION! *(Continued)*

this will damage the outlet and blow the fuse. Improper use of the power outlet can cause damage not covered by your New Vehicle Limited Warranty.

The front power outlet is located inside the storage area on the center stack of the instrument panel.

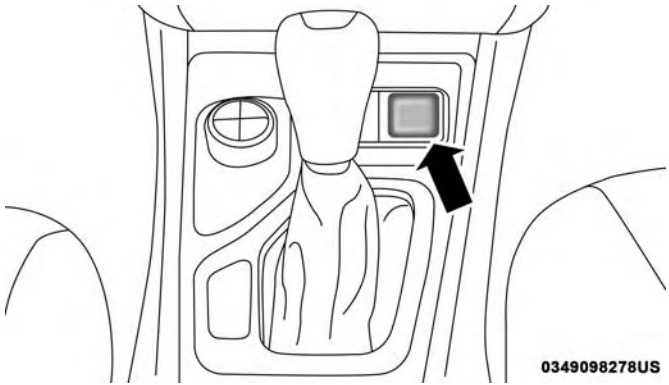

Front Power Outlet

In addition to the front power outlet, there is also a power outlet located in the storage area of the center console.

A third fused 12 Volt power outlet is located on the left quarter trim panel in the cargo area. This power outlet has power available when the ignition switch is in the ON or ACC position.

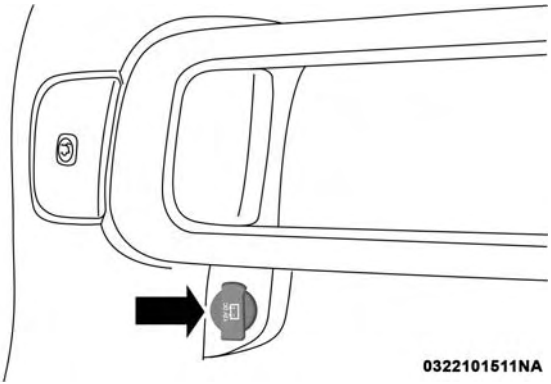

Rear Power Outlet

NOTE: The rear cargo power outlet can be changed to "battery" powered all the time by switching the power outlet Power Distribution Center panel fuse from fuse location F91 to F81.

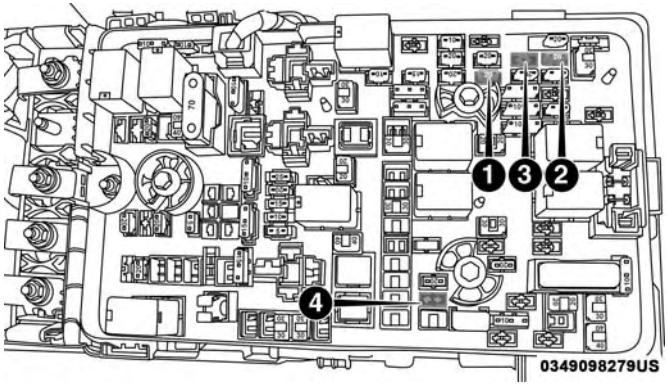

Power Outlet Fuse Locations

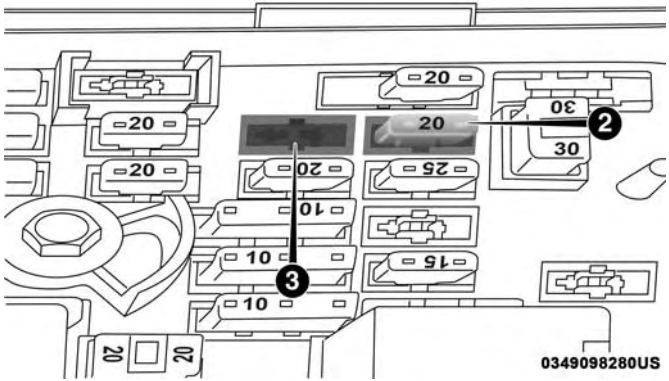

Rear Cargo Power Outlet Fuse Locations

1 — F75 Fuse 20A Yellow Front Power Outlet/Cigar Lighter Console Bin
2 — F91 Fuse 20A Yellow Rear Power Outlet (powered when the ignition switch is in the ON or ACC position)
3 — F81 Fuse 20A Yellow Rear Power Outlet (battery powered at all times)
4 — F60 Fuse 20A Yellow Power Outlet Center Console

WARNING!

To avoid serious injury or death:

- **Only devices designed for use in this type of outlet should be inserted into any 12 Volt outlet.**
- **Do not touch with wet hands.**
- **Close the lid when not in use and while driving the vehicle.**
- **If this outlet is mishandled, it may cause an electric shock and failure.**

CAUTION!

- **Many accessories that can be plugged in draw power from the vehicle's battery, even when not in use (i.e., cellular phones, etc.). Eventually, if plugged in long enough, the vehicle's battery will discharge sufficiently to degrade battery life and/or prevent the engine from starting.**
- **Accessories that draw higher power (i.e., coolers, vacuum cleaners, lights, etc.) will degrade the battery even more quickly. Only use these intermittently and with greater caution.**

(Continued)

CAUTION! *(Continued)*

- **After the use of high power draw accessories, or long periods of the vehicle not being started (with accessories still plugged in), the vehicle must be driven a sufficient length of time to allow the generator to recharge the vehicle's battery.**

Power Inverter — If Equipped

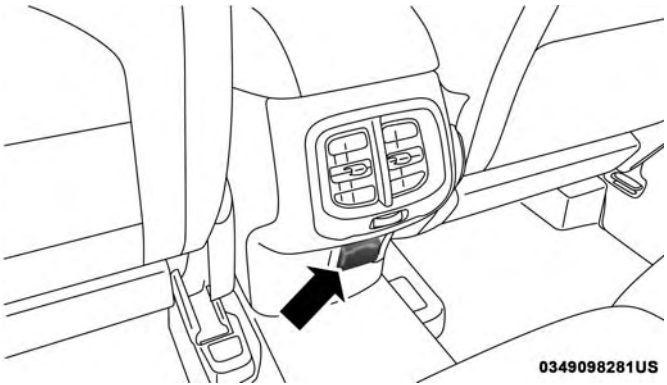

Power Inverter Location

There is a 115 Volt, 150 Watt inverter outlet located on the back of the center console to convert DC current to AC current. This outlet can power cellular phones, electronics and other low power devices requiring power up to 150 Watts. Certain high-end game consoles will exceed this power limit, as will most power tools.

To turn on the power inverter outlet, simply plug in the device. The outlet automatically turns off when the device is unplugged.

The power inverter is designed with built-in overload protection. If the power rating of 150 Watts is exceeded, the power inverter will automatically shut down. Once the electrical device has been removed from the outlet the inverter should automatically reset. To avoid overloading the circuit, check the power ratings on electrical devices prior to using the inverter.

WARNING!

To avoid serious injury or death:

- **Do not insert any objects into the receptacles.**
- **Do not touch with wet hands.**
- **Close the lid when not in use.**
- **If this outlet is mishandled, it may cause an electric shock and failure.**

Wireless Charging Pad — If Equipped

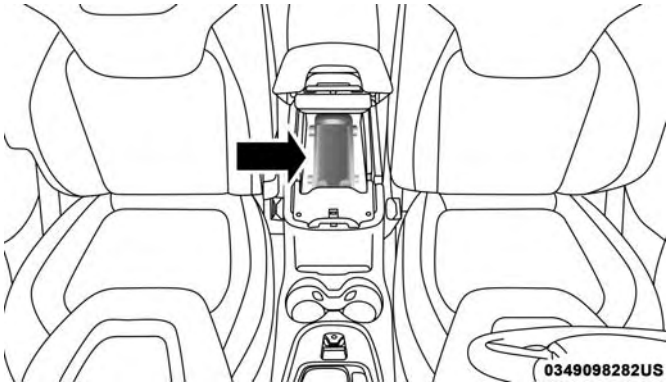

Wireless Charging Pad

Your vehicle may be equipped with a wireless charging pad located inside the upper portion of the center console. This charging pad is designed to wirelessly charge your Qi enabled mobile phone. Qi is a standard that uses magnetic induction to transfer power to your mobile device.

Your mobile phone must be designed for Qi wireless charging, be equipped with an aftermarket sleeve or equipped with a back plate from your mobile phone provider, or an online or local electronics retailer.

The wireless charging pad is equipped with an anti-slip mat, an adjustable cradle to hold your mobile phone in place and an LED indicator light.

NOTE: Visit UconnectPhone.com for supported mobile phones and compatible aftermarket sleeves.

Wireless Charging Pad Operation

To use the wireless charging pad, the coil in your mobile phone needs to align with the coil in the charging pad, which is located directly under the Qi logo. Since each mobile phone's coil location is different, you may need a few attempts to locate the correct spot for your mobile phone:

1. Place your mobile phone on the wireless charging pad, towards the Qi logo, so that the LED turns red. If the LED does not turn red, pick up the mobile phone and change the location.
2. Once the LED transitions from red to flashing green, your mobile phone is correctly placed and charging.

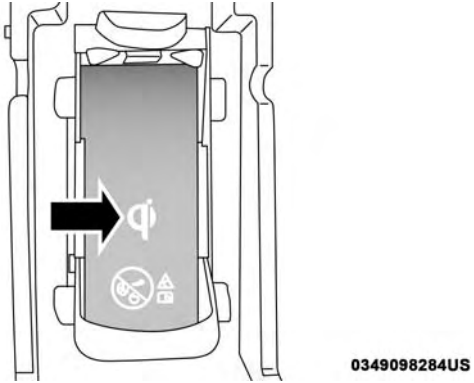

Qi Logo Phone Alignment

NOTE: The mobile phone **must** be aligned around the Qi logo for the LED to transition from red to flashing green.

3. If the LED does not transition from red to flashing green, and just turns off, pick up your mobile phone and reposition it on the charging pad.
4. Adjust the wireless charging pad mobile phone cradle to hold the mobile phone in position. The cradle moves by pushing down on the finger tabs and adjusting the cradle in or out.

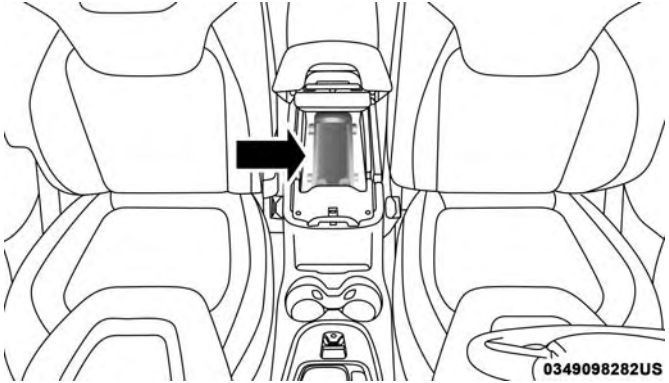

Adjustable Finger Tabs

NOTE: The initial adjustment will only need to be done once as long as only one mobile phone is used. If a different mobile phone is used, the cradle will need to be readjusted.

The LED indicator will flash green while the mobile phone is charging. The Qi enabled phone is able to function normally as it is charging.

WARNING!

Do not place metal object(s) between the mobile phone and wireless charging pad. Metal object(s) such as coins, rings or keys will become very HOT. If metal object(s) become lodged between the mobile phone and wireless charging pad, carefully remove the mobile phone and allow the metal object(s) to cool before removing. Failure to wait until the object(s) cool could result in personal injury, including burns.

CAUTION!

Do not place your vehicle key fob on the wireless charging pad, the Keyless Enter-N-Go feature may not work properly while a mobile phone is being charged.

ROOF LUGGAGE RACK — IF EQUIPPED

The load carried on the roof, when equipped with a luggage rack, must not exceed 150 lbs (68 kg), and it should be uniformly distributed over the cargo area.

Crossbars should always be used whenever cargo is placed on the roof rack. Check the straps frequently to be sure that the load remains securely attached.

NOTE: Crossbars can be purchased at your authorized dealer through Mopar parts.

External racks do not increase the total load carrying capacity of the vehicle. Be sure that the total occupant and luggage load inside the vehicle, plus the load on the luggage rack, do not exceed the maximum vehicle load capacity.

WARNING!

Cargo must be securely tied down before driving your vehicle. Improperly secured loads can fly off the vehicle, particularly at high speeds, resulting in personal injury or property damage. Follow the roof rack cautions when carrying cargo on your roof rack.

CAUTION!

- To avoid damage to the roof rack and vehicle, do not exceed the maximum roof rack load capacity. Always distribute heavy loads as evenly as possible and secure the load appropriately.
- Long loads, which extend over the windshield, such as wood panels or surfboards, should be secured to both the front and rear of the vehicle.
- Place a blanket or other protection between the surface of the roof and the load.
- Travel at reduced speeds and turn corners carefully when carrying large or heavy loads on the roof rack. Wind forces, due to natural causes or nearby truck traffic, can add sudden upward loads. This is especially true on large flat loads and may result in damage to the cargo or your vehicle.
- Load should always be secured to cross bars first, with tie down loops used as additional securing points if needed. Tie loops are intended as supplementary tie down points only. Do not use ratcheting mechanisms with the tie loops. Check the straps frequently to be sure that the load remains securely attached.

GETTING TO KNOW YOUR INSTRUMENT PANEL

CONTENTS

■ INSTRUMENT CLUSTER 126

□ Instrument Cluster Descriptions. 127

■ INSTRUMENT CLUSTER DISPLAY — IF EQUIPPED. 128

□ Instrument Cluster Display Location And Controls 129

□ Oil Change Reset 131

□ Instrument Cluster Display Menu Items 131

□ Battery Saver On/Battery Saver Mode Message — Electrical Load Reduction Actions — If Equipped 136

■ WARNING/INDICATOR LIGHTS AND MESSAGES 138

□ Red Telltale Lights 139

□ Yellow Telltale Lights 146

□ Blue Telltale Lights. 158

□ Green Telltale Lights. 158

□ White Telltale Lights. 163

■ ONBOARD DIAGNOSTIC SYSTEM — OBD II . . .166

□ Onboard Diagnostic System (OBD II) Cybersecurity 166

■ EMISSIONS INSPECTION AND MAINTENANCE PROGRAMS 167

INSTRUMENT CLUSTER

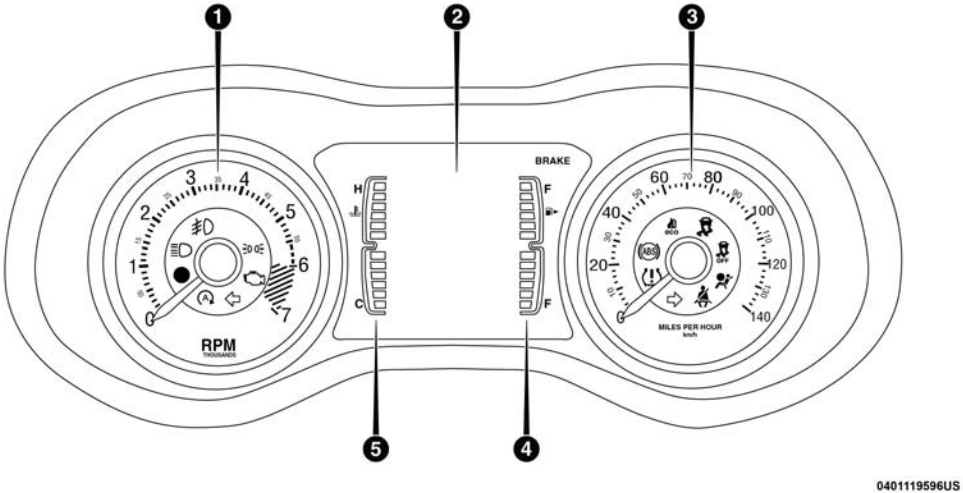

Base Instrument Cluster

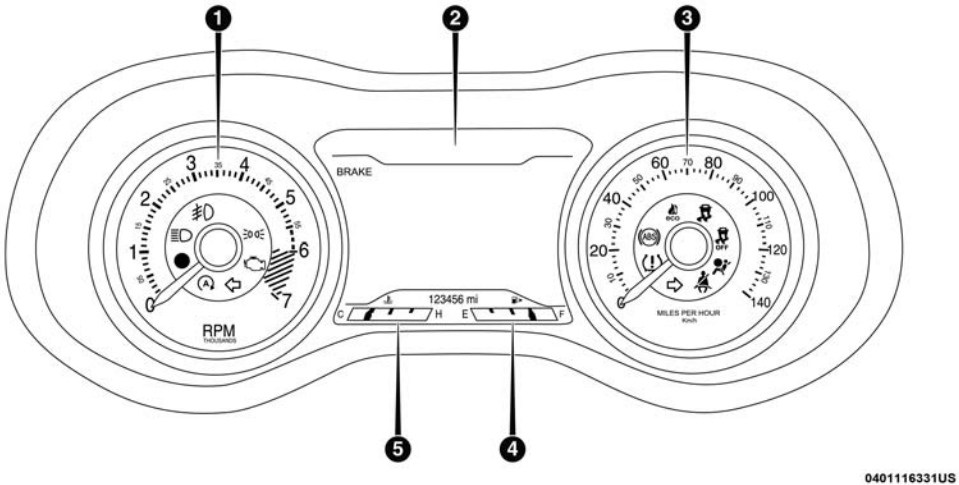

Premium Instrument Cluster

Instrument Cluster Descriptions

1. Tachometer
   - Indicates the engine speed in revolutions per minute (RPM x 1000).
2. Instrument Cluster Display
   - The instrument cluster display features a driver-interactive display. Refer to “Instrument Cluster Display” in “Getting To Know Your Instrument Panel” for further information.

3. Speedometer
   - Indicates vehicle speed.
4. Fuel Gauge
   - The fuel gauge shows the level of fuel in the fuel tank when the ignition is in the ON/RUN mode.
   - The fuel pump symbol points to the side of the vehicle where the fuel door is located.
5. Temperature Gauge
   - The temperature gauge shows engine coolant temperature. Any reading within the normal range indicates that the engine cooling system is operating satisfactorily.
   - The gauge will likely indicate a higher temperature when driving in hot weather or up mountain grades. It should not be allowed to exceed the upper limits of the normal operating range.

WARNING!

A hot engine cooling system is dangerous. You or others could be badly burned by steam or boiling coolant. You may want to call your authorized dealer for service if your vehicle overheats.

CAUTION!

Driving with a hot engine cooling system could damage your vehicle. If the temperature gauge reads "H" pull over and stop the vehicle. Idle the vehicle with the air conditioner turned off until the pointer drops back into the normal range. If the pointer remains on the "H", turn the engine off immediately and call your authorized dealer for service.

NOTE: The hard telltales will illuminate for a bulb check when the ignition is first cycled.

INSTRUMENT CLUSTER DISPLAY — IF EQUIPPED

Your vehicle may be equipped with an instrument cluster display, which offers useful information to the driver. With the ignition in the STOP/OFF mode, opening/closing of a door will activate the display for viewing, and display the total miles, or kilometers, in the odometer. Your instrument cluster display is designed to display important information about your vehicle's systems and features. Using a driver interactive display located on the instrument panel, your instrument cluster display can show you how systems are working and give you warnings when they aren't.

The steering wheel mounted controls allow you to scroll through and enter the main menus and submenus. You can access the specific information you want and make selections and adjustments.

Instrument Cluster Display Location And Controls

The instrument cluster display features a driver-interactive display that is located in the instrument cluster.

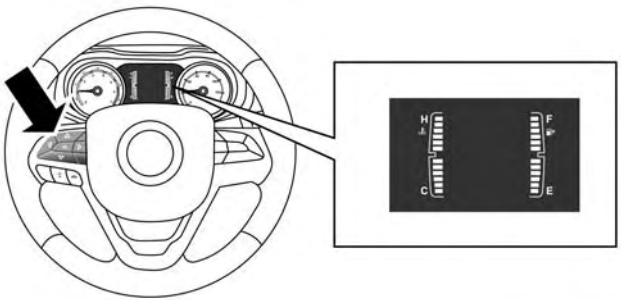

0403098587US

Base Instrument Cluster Display

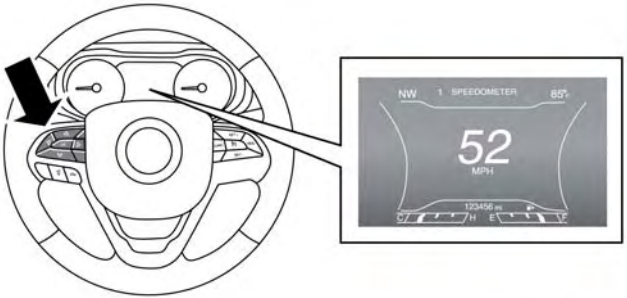

0402109058US

Premium Instrument Cluster Display

The instrument cluster display menu items consist of the following:

- Speedometer
- Vehicle Info
- Driver Assist — If Equipped
- Fuel Economy
- Trip
- Stop/Start — If Equipped
- Audio

- Messages
- Screen Setup

The system allows the driver to select information by pushing the following buttons mounted on the steering wheel:

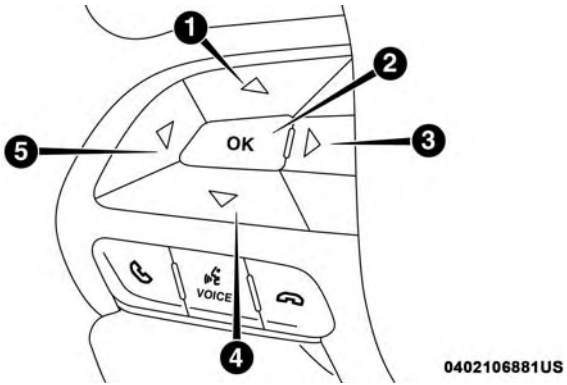

Instrument Cluster Display Control Buttons

1 — Up Arrow Button
2 — OK Button
3 — Right Arrow Button
4 — Down Arrow Button
5 — Left Arrow Button

- *Up Arrow Button*

Push and release the **up** arrow button to scroll upward through the main menu and submenus.

- *Down Arrow Button*

Push and release the **down** arrow button to scroll downward through the main menu and submenus.

- *Right Arrow Button*

Push and release the **right** arrow button to access the information screens or submenu screens of a main menu item.

- *Left Arrow Button*

Push and release the **left** arrow button to access the information screens or submenu screens of a main menu item.

- *OK Button*

Push the **OK** button to access/select the information screens or submenu screens of a main menu item. Push and hold the **OK** button to reset displayed/selected features that can be reset.

Oil Change Reset

Your vehicle is equipped with an engine oil change indicator system. The "Oil Change Required" message will display in the instrument cluster display for five seconds after a single chime has sounded, to indicate the next scheduled oil change interval. The engine oil change indicator system is duty cycle based, which means the engine oil change interval may fluctuate, dependent upon your personal driving style.

Unless reset, this message will continue to display each time you cycle the ignition to the ON/RUN position. To turn off the message temporarily, push and release the **OK** button. To reset the oil change indicator system (after performing the scheduled maintenance), refer to the following procedure.

Oil Life Reset

1. Without pushing the brake pedal, push and release the ENGINE START/STOP button and place the ignition to the ON/RUN position (do not start the engine).
2. Navigate to "Oil Life" submenu in "Vehicle Info" in the instrument cluster display.
3. Push and hold the **OK** button until the gauge resets to 100%.

Secondary Method For Oil Change Reset Procedure

1. Without pushing the brake pedal, push and release the ENGINE START/STOP button and place the ignition to the ON/RUN position (do not start the engine).
2. Fully push the accelerator pedal, slowly, three times within ten seconds.
3. Without pushing the brake pedal, push and release the ENGINE START/STOP button once to return the ignition to the OFF/LOCK position.

NOTE: If the indicator message illuminates when you start the vehicle, the oil change indicator system did not reset. If necessary, repeat this procedure.

Instrument Cluster Display Menu Items

NOTE: The instrument cluster display menu items display in the center of the instrument cluster. Menu items may vary depending on your vehicle features.

Speedometer

Push and release the **up** or **down** arrow button until the speedometer menu icon is displayed in the instrument cluster display. Push and release the **left** or **right** arrow button to select the analog or digital type speedometer display. Push and release the **OK** button to toggle units (mph or km/h) of the speedometer.

Push and release the **left** or **right** arrow buttons to change between large and small speedometer display.

Vehicle Info

Push and release the **up** or **down** arrow button until the Vehicle Info menu icon is displayed in the instrument cluster display. Push and release the **left** or **right** arrow button to scroll through the information submenus and push and release the **OK** button to select or reset the resettable submenus.

• Tire Pressure: This menu option will display the current tire pressure. A low tire will be highlighted in red.	• Oil Life: This menu option will display the current oil life of the vehicle.
• Coolant Temperature: This menu option will display the current coolant temperature of the vehicle.	• Oil Temperature: This menu option will display the current oil temperature of the vehicle.
• Transmission Temperature: This menu will display the current transmission temperature of the vehicle.	• Battery Voltage: This menu option will display the current voltage level of the battery.

Driver Assist

Push and release the **up** or **down** arrow button until the Driver Assist menu title is displayed is highlighted in the instrument cluster display.

The instrument cluster display displays the current ACC system settings. The information displayed depends on ACC system status.

Push the Adaptive Cruise Control (ACC) on/off button (located on the steering wheel) until one of the following displays in the instrument cluster display:

Adaptive Cruise Control Off

When ACC is deactivated, the display will read "Adaptive Cruise Control Off."

Adaptive Cruise Control Ready

When ACC is activated but the vehicle speed setting has not been selected, the display will read "Adaptive Cruise Control Ready."

Push and release the SET + or the SET- button (located on the steering wheel) and the following will display in the instrument cluster display:

ACC SET

When ACC is set, the set speed will display in the instrument cluster.

The ACC screen may display once again if any ACC activity occurs, which may include any of the following:

- Distance Setting Change
- System Cancel
- Driver Override
- System Off
- ACC Proximity Warning
- ACC Unavailable Warning
- The instrument cluster display will return to the last display selected after five seconds of no ACC display activity.

Refer to "Adaptive Cruise Control (ACC) — If Equipped" in "Starting And Operating" for further information.

The instrument cluster display displays the current LaneSense system settings. The information displayed depends on LaneSense system status and the conditions that need to be met. Refer to "LaneSense — If Equipped" in "Starting And Operating" for further information.

Fuel Economy

Push and release the **up** or **down** arrow button until the Fuel Economy menu title is displayed in the instrument cluster display. Toggle the **left** or **right** arrow button to select the screen with or without current fuel economy display. Push and hold the **OK** button to reset average fuel economy feature.

- Range – The display shows the estimated distance (mi or km) that can be traveled with the fuel remaining in the tank. When the Range value is less than 30 miles (48 km) estimated driving distance, the Range display will change to a "LOW FUEL" message. Adding a significant amount of fuel to the vehicle will turn off the "LOW FUEL" message and a new Range value will display. Range cannot be reset through the **OK** button.

NOTE: Significant changes in driving style or vehicle loading will greatly affect the actual drivable distance of the vehicle, regardless of the Range displayed value.

- Average – The display shows the average fuel economy (MPG, L/100 km, or km/L) since the last reset.
- Current – This display shows the current fuel economy (MPG, L/100 km, or km/L) form while driving.

Trip Info

Push and release the **up** or **down** arrow button until the Trip menu title is displayed in the instrument cluster display. Toggle the **left** or **right** arrow button to select Trip A or Trip B. The Trip information will display the following:

- Distance – Shows the total distance (mi or km) traveled for Trip A or Trip B since the last reset.
- Average Fuel Economy – Shows the average fuel economy (MPG or L/100 km or km/L) of Trip A or Trip B since the last reset.
- Elapsed Time – Shows the total elapsed time of travel since Trip A or Trip B has been reset.

Hold the **OK** button to reset feature information.

Stop/Start – If Equipped

Push and release the **up** or **down** arrow button until the Stop/Start menu title is displayed in the instrument cluster display.

Audio

Push and release the **up** or **down** arrow button until the Audio menu title is displayed in the instrument cluster display.

Stored Messages

Push and release the **up** or **down** arrow button until the Messages Menu Icon is highlighted in the instrument cluster display. This feature shows the number of stored warning messages. Pushing the **left** or **right** arrow button will allow you to scroll through the stored messages.

Screen Setup

Push and release the **up** or **down** arrow button until the Screen Setup Menu Icon/Title is highlighted in the instrument cluster display. Push and release the **OK** button to enter the submenus and follow the prompts on the screen as needed. The Screen Setup feature allows you to change what information is displayed in the instrument cluster as well as the location that information is displayed.

Screen Setup Driver Selectable Items

Upper Left	Upper Right
• None • Compass • Outside Temp. (default) • Time • Range • Average MPG (or L/100km) • Current MPG (or L/100km) • Trip A Distance • Trip B Distance	• None • Compass (default) • Outside Temp. • Time • Range • Average MPG (or L/100km) • Current MPG (or L/100km) • Trip A Distance • Trip B Distance

Center	Gear Display — If Equipped With A Premium Cluster
• None • Compass • Outside Temp. • Time • Range • Average MPG (or L/100km) • Current MPG (or L/100km) • Trip A Distance • Trip B Distance • Audio Information • Speedometer • Menu Title (default)	• Full (default) • Single
Defaults (defaults: Outside Temp UL, Compass UR, Center Menu Title) • Restore • Cancel	

Battery Saver On/Battery Saver Mode Message — Electrical Load Reduction Actions — If Equipped

This vehicle is equipped with an Intelligent Battery Sensor (IBS) to perform additional monitoring of the electrical system and status of the vehicle battery.

In cases when the IBS detects charging system failure, or the vehicle battery conditions are deteriorating, electrical load reduction actions will take place to extend the driving time and distance of the vehicle. This is done by reducing power to or turning off non-essential electrical loads.

Load reduction is only active when the engine is running. It will display a message if there is a risk of battery depletion to the point where the vehicle may stall due to lack of electrical supply, or will not restart after the current drive cycle.

When load reduction is activated, the message “Battery Saver On” or “Battery Saver Mode” will appear in the instrument cluster display.

These messages indicate the vehicle battery has a low state of charge and continues to lose electrical charge at a rate that the charging system cannot sustain.

NOTE:

- The charging system is independent from load reduction. The charging system performs a diagnostic on the charging system continuously.
- If the Battery Charge Warning Light is on it may indicate a problem with the charging system. Refer to “Battery Charge Warning Light” in “Warning/Indicator Lights And Messages” located in ”Getting To Know Your Instrument Panel” for further information.

The electrical loads that may be switched off (if equipped), and vehicle functions which can be effected by load reduction:

- Heated Seat/Vented Seats/Heated Wheel
- Heated/Cooled Cup Holders — If Equipped
- Rear Defroster And Heated Mirrors
- HVAC System
- 150W Power Inverter System
- Audio and Telematics System

Loss of the battery charge may indicate one or more of the following conditions:

- The charging system cannot deliver enough electrical power to the vehicle system because the electrical loads are larger than the capability of charging system. The charging system is still functioning properly.
- Turning on all possible vehicle electrical loads (e.g. HVAC to max settings, exterior and interior lights, overloaded power outlets +12V, 150W, USB ports) during certain driving conditions (city driving, towing, frequent stopping).
- Installing options like additional lights, upfitter electrical accessories, audio systems, alarms and similar devices.
- Unusual driving cycles (short trips separated by long parking periods).
- The vehicle was parked for an extended period of time (weeks, months).
- The battery was recently replaced and was not charged completely.
- The battery was discharged by an electrical load left on when the vehicle was parked.
- The battery was used for an extended period with the engine not running to supply radio, lights, chargers, +12V portable appliances like vacuum cleaner's, game consoles and similar devices.

What to do when an electrical load reduction action message is present ("Battery Saver On" or "Battery Saver Mode")

During a trip:

- Reduce power to unnecessary loads if possible:
  - Turn off redundant lights (interior or exterior)
  - Check what may be plugged in to power outlets +12V, 150W, USB ports
  - Check HVAC settings (blower, temperature)
  - Check the audio settings (volume)

After a trip:

- Check if any aftermarket equipment was installed (additional lights, upfitter electrical accessories, audio systems, alarms) and review specifications if any (load and Ignition Off Draw currents).
- Evaluate the latest driving cycles (distance, driving time and parking time).
- The vehicle should have service performed if the message is still present during consecutive trips and the evaluation of the vehicle and driving pattern did not help to identify the cause.

WARNING/INDICATOR LIGHTS AND MESSAGES

The warning/indicator light switches on in the instrument panel together with a dedicated message and/or acoustic signal when applicable. These indications are indicative and precautionary and as such must not be considered as exhaustive and/or alternative to the information contained in the Owner Manual, which you are advised to read carefully in all cases. Always refer to the information in this chapter in the event of a failure indication.

All active telltales will display first, if applicable. The system check menu may appear different based upon equipment options and current vehicle status. Some telltales are optional and may not appear.

The following warning lamps and indicators will alert you to a vehicle condition that may become serious. Some lamps will illuminate when you start your vehicle to make sure they work. If any lamps remain on after starting your vehicle, refer to the respective system warning lamp for further information.

Red Telltale Lights

Seat Belt Reminder Warning Light

Red Telltale Light	What It Means
	Seat Belt Reminder Warning Light When the ignition switch is first turned to ON/RUN, this light will turn on for four to eight seconds as a bulb check. During the bulb check, if the driver's or passenger seat belt is unbuckled, a chime will sound. After the bulb check or when driving, if the driver's seat belt remains unbuckled, the Seat Belt Reminder Light will flash or remain on continuously and a chime will sound. Refer to "Occupant Restraint Systems" in "Safety" for further information.

Air Bag Warning Light

Red Telltale Light	What It Means
	Air Bag Warning Light This light will turn on for four to eight seconds as a bulb check when the ignition switch is first turned to ON/RUN. If the light is either not on during startup, stays on, or turns on while driving, have the system inspected at an authorized dealer as soon as possible. This light will illuminate with a single chime when a fault with the Air Bag Warning Light has been detected, it will stay on until the fault is cleared. If the light comes on intermittently or remains on while driving, have an authorized dealer service the vehicle immediately. Refer to "Occupant Restraint Systems" in "Safety" for further information.

Brake Warning Light

Red Telltale Light	What It Means
BRAKE	**Brake Warning Light** This light monitors various brake functions, including brake fluid level and parking brake application. If the brake light turns on it may indicate that the parking brake is applied, that the brake fluid level is low, or that there is a problem with the anti-lock brake system reservoir. If the light remains on when the parking brake has been disengaged, and the fluid level is at the full mark on the master cylinder reservoir, it indicates a possible brake hydraulic system malfunction or that a problem with the Brake Booster has been detected by the Anti-Lock Brake System (ABS) / Electronic Stability Control (ESC) system. In this case, the light will remain on until the condition has been corrected. If the problem is related to the brake booster, the ABS pump will run when applying the brake, and a brake pedal pulsation may be felt during each stop.

The dual brake system provides a reserve braking capacity in the event of a failure to a portion of the hydraulic system. A leak in either half of the dual brake system is indicated by the Brake Warning Light, which will turn on when the brake fluid level in the master cylinder has dropped below a specified level.

The light will remain on until the cause is corrected.

NOTE: The light may flash momentarily during sharp cornering maneuvers, which change fluid level conditions. The vehicle should have service performed, and the brake fluid level checked.

If brake failure is indicated, immediate repair is necessary.

WARNING!

Driving a vehicle with the red brake light on is dangerous. Part of the brake system may have failed. It will take longer to stop the vehicle. You could have a collision. Have the vehicle checked immediately.

Vehicles equipped with the Anti-Lock Brake System (ABS) are also equipped with Electronic Brake Force Distribution (EBD). In the event of an EBD failure, the Brake Warning Light will turn on along with the ABS Light. Immediate repair to the ABS system is required.

Operation of the Brake Warning Light can be checked by turning the ignition switch from the OFF position to the ON/RUN position. The light should illuminate for approximately two seconds. The light should then turn off unless the parking brake is applied or a brake fault is detected. If the light does not illuminate, have the light inspected by an authorized dealer.

The light also will turn on when the parking brake is applied with the ignition switch in the ON/RUN position.

NOTE: This light shows only that the parking brake is applied. It does not show the degree of brake application.

Vehicle Security Warning Light

Red Telltale Light	What It Means
●	**Vehicle Security Warning Light** This light will flash at a fast rate for approximately 15 seconds when the vehicle security alarm is arming, and then will flash slowly until the vehicle is disarmed.

Oil Pressure Warning Light

Red Telltale Light	What It Means
	Oil Pressure Warning Light This light indicates low engine oil pressure. If the light turns on while driving, stop the vehicle and shut off the engine as soon as possible. A chime will sound when this light turns on. Do not operate the vehicle until the cause is corrected. This light does not indicate how much oil is in the engine. The engine oil level must be checked under the hood.

Transmission Temperature Warning Light

Red Telltale Light	What It Means
	Transmission Temperature Warning Light This light indicates that the transmission fluid temperature is running hot. This may occur with severe usage. If this light turns on, safely pull over and stop the vehicle. Then, shift the transmission into NEUTRAL and run the engine at idle or faster until the light turns off.

WARNING!

If you continue operating the vehicle when the Transmission Temperature Warning Light is illuminated you could cause the fluid to boil over, come in contact with hot engine or exhaust components and cause a fire.

CAUTION!

Continuous driving with the Transmission Temperature Warning Light illuminated will eventually cause severe transmission damage or transmission failure.

Engine Temperature Warning Light

Red Warning Light	What It Means
	Engine Temperature Warning Light This light warns of an overheated engine condition. As engine coolant temperatures rise and the gauge approaches **H,** this indicator will illuminate and a single chime will sound after reaching a set threshold. If the light turns on while driving, safely pull over and stop the vehicle. If the A/C system is on, turn it off. Also, shift the transmission into NEUTRAL and idle the vehicle. If the temperature reading does not return to normal, turn the engine off immediately and call for service. Refer to "If Your Engine Overheats" in "In Case Of Emergency" for further information.

Oil Temperature Warning Light

Red Telltale Light	What It Means
	Oil Temperature Warning Light This telltale indicates vehicle oil temperature is high. If the light turns on while driving, stop the vehicle and shut off the engine as soon as possible.

Battery Charge Warning Light

Red Telltale Light	What It Means
	Battery Charge Warning Light This light illuminates when the battery is not charging properly. If it stays on while the engine is running, there may be a malfunction with the charging system. Contact your authorized dealer as soon as possible. This indicates a possible problem with the electrical system or a related component. If jump starting is required, refer to “Jump-Starting” in “In Case Of Emergency.”

Electronic Throttle Control (ETC) Warning Light

Red Telltale Light	What It Means
	Electronic Throttle Control (ETC) Warning Light This light informs you of a problem with the Electronic Throttle Control (ETC) system. If a problem is detected while the vehicle is running, the light will either stay on or flash depending on the nature of the problem. Cycle the ignition when the vehicle is safely and completely stopped and the transmission is placed in the PARK position. The light should turn off. If the light remains on with the vehicle under power, your vehicle will usually be drivable; however, see an authorized dealer for service as soon as possible. If the light continues to flash when the vehicle is under power, immediate service is required and you may experience reduced performance, and your vehicle may require towing. The light will come on when the ignition is placed in the ON/RUN position and remain on briefly as a bulb check. If the light does not come on during starting, have the system checked by an authorized dealer.

Electric Power Steering Fail Warning Light — If Equipped

Red Telltale Light	What It Means
	Electric Power Steering Fail Warning — If Equipped This light is used to manage the electrical warning of the EPS (Electric Power Steering). Refer to "Electric Power Steering" in "Starting And Operating" for further information. Refer to "Power Steering" in "Starting And Operating" for further information.

Door Open Warning Light

Red Telltale Light	What It Means
	Door Open Warning Light This indicator will illuminate when a door is ajar/open and not fully closed. **NOTE:** If the vehicle is moving, there will also be a single chime.

Liftgate Open Warning Light

Red Telltale Light	What It Means
	Liftgate Open Warning Light This indicator will turn on when the liftgate is open. **NOTE:** If the vehicle is moving there will also be a single chime.

Yellow Telltale Lights

Engine Malfunction Warning Light

Yellow Telltale Light	What It Means
	Engine Check/Malfunction Indicator Light (MIL) The Engine Check/Malfunction Indicator Light (MIL) is a part of an Onboard Diagnostic System called OBD II that monitors engine and automatic transmission control systems. The light will illuminate when the ignition is in the ON position before engine start. If the bulb does not come on when placing the ignition in the ON/RUN position, have the condition checked promptly. Certain conditions, such as a loose or missing gas cap, poor quality fuel, etc., may illuminate the light after engine start. The vehicle should be serviced if the light stays on through several typical driving styles. In most situations, the vehicle will drive normally and will not require towing. When the engine is running, the MIL may flash to alert serious conditions that could lead to immediate loss of power or severe catalytic converter damage. The vehicle should be serviced as soon as possible if this occurs.

WARNING!

A malfunctioning catalytic converter, as referenced above, can reach higher temperatures than in normal operating conditions. This can cause a fire if you drive slowly or park over flammable substances such as dry plants, wood, cardboard, etc. This could result in death or serious injury to the driver, occupants or others.

CAUTION!

Prolonged driving with the Malfunction Indicator Light (MIL) on could cause damage to the vehicle control system. It also could affect fuel economy and driveability. If the MIL is flashing, severe catalytic converter damage and power loss will soon occur. Immediate service is required.

Electronic Stability Control (ESC) Indicator Light

Yellow Telltale Light	What It Means
	Electronic Stability Control (ESC) Indicator Light — If Equipped The "ESC Indicator Light" in the instrument cluster will come on when the ignition is placed in the ON/RUN position. It should go out when the engine is running. If the "ESC Indicator Light" comes on continuously with the engine running, a malfunction has been detected in the ESC system. If this light remains on after several ignition cycles, and the vehicle has been driven several miles (kilometers) at speeds greater than 30 mph (48 km/h), see your authorized dealer as soon as possible to have the problem diagnosed and corrected. • The "ESC Off Indicator Light" and the "ESC Indicator Light" come on momentarily each time the ignition switch is placed in the ON/RUN position. • Each time the ignition is placed in the ON/RUN position, the ESC system will be ON, even if it was turned off previously. • The ESC telltale will flash when in an ESC event (loss of traction). • The ESC system will make buzzing or clicking sounds when it is active. This is normal; the sounds will stop when ESC becomes inactive following the maneuver that caused the ESC activation. **NOTE:** This telltale indicates that an ESC event is active.

Electronic Stability Control (ESC) OFF Indicator Light — If Equipped

Yellow Telltale Light	What It Means
OFF	**Electronic Stability Control (ESC) OFF Indicator Light — If Equipped** This light indicates the Electronic Stability Control (ESC) is off.

Electronic Park Brake Fail Light

Yellow Telltale Light	What It Means
(P)!	**Electronic Park Brake Fail Warning Light** This telltale will turn on to indicate the Electronic Park Brake is not functioning properly and that service is required. Contact your authorized dealership.

Tire Pressure Monitoring System (TPMS) Warning Light

Yellow Telltale Light	What It Means
	Tire Pressure Monitoring System (TPMS) Warning Light The warning light switches on and a message is displayed to indicate that the tire pressure is lower than the recommended value and/or that slow pressure loss is occurring. In these cases, optimal tire duration and fuel consumption may not be guaranteed. Should one or more tires be in the condition mentioned above, the display will show the indications corresponding to each tire in sequence.

CAUTION!

Do not continue driving with one or more flat tires as handling may be compromised. Stop the vehicle, avoiding sharp braking and steering. If a tire puncture occurs, repair immediately using the dedicated tire repair kit and contact your authorized dealer as soon as possible.

Each tire, including the spare (if provided), should be checked monthly when cold and inflated to the inflation pressure recommended by the vehicle manufacturer on the vehicle placard or tire inflation pressure label. (If your vehicle has tires of a different size than the size indicated on the vehicle placard or tire inflation pressure label, you should determine the proper tire inflation pressure for those tires.)

As an added safety feature, your vehicle has been equipped with a tire pressure monitoring system (TPMS) that illuminates a low tire pressure telltale when one or more of your tires is significantly under-inflated. Accordingly, when the low tire pressure telltale illuminates, you should stop and check your tires as soon as possible, and inflate them to the proper pressure. Driving on a significantly under-inflated tire causes the tire to overheat and can lead to tire failure. Under-inflation also reduces fuel efficiency and tire tread life, and may affect the vehicle's handling and stopping ability.

Please note that the TPMS is not a substitute for proper tire maintenance, and it is the driver's responsibility to maintain correct tire pressure, even if under-inflation has not reached the level to trigger illumination of the TPMS low tire pressure telltale.

Your vehicle has also been equipped with a TPMS malfunction indicator to indicate when the system is not operating properly. The TPMS malfunction indicator is combined with the low tire pressure telltale. When the system detects a malfunction, the telltale will flash for approximately one minute and then remain continuously illuminated. This sequence will continue upon subsequent vehicle start-ups as long as the malfunction exists. When the malfunction indicator is illuminated, the system may not be able to detect or signal low tire pressure as intended. TPMS malfunctions may occur for a variety of reasons, including the installation of replacement or alternate tires or wheels on the vehicle that prevent the TPMS from functioning properly. Always check the TPMS malfunction telltale after replacing one or more tires or wheels on your vehicle to ensure that the replacement or alternate tires and wheels allow the TPMS to continue to function properly.

CAUTION!

The TPMS has been optimized for the original equipment tires and wheels. TPMS pressures and warning have been established for the tire size equipped on your vehicle. Undesirable system operation or sensor damage may result when using replacement equipment that is not of the same size, type, and/or style. Aftermarket wheels can cause sensor damage. Using aftermarket tire sealants may cause the Tire Pressure Monitoring System (TPMS) sensor to become inoperable. After using an aftermarket tire sealant it is recommended that you take your vehicle to your authorized dealer to have your sensor function checked.

Anti-Lock Brake (ABS) Indicator Light

Yellow Telltale Light	What It Means
ABS	**Anti-Lock Brake (ABS) Indicator Light** This light monitors the Anti-Lock Brake System (ABS). The light will turn on when the ignition switch is placed in the ON/RUN position and may stay on for as long as four seconds. If the ABS light remains on or turns on while driving, then the Anti-Lock portion of the brake system is not functioning and service is required. However, the conventional brake system will continue to operate normally if the brake warning light is not on. If the ABS light is on, the brake system should be serviced as soon as possible to restore the benefits of Anti-Lock Brakes. If the ABS light does not turn on when the ignition switch is placed in the ON/RUN position, have the light inspected by an authorized dealer.

Low Fuel Warning Light

Yellow Telltale Light	What It Means
	Low Fuel Indicator Light When the fuel level reaches approximately 2.4 gal (9.1 L) this light will turn on, and remain on until fuel is added. A single warning chime will sound with Low Fuel Warning.

Service Stop/Start System Indicator Light — If Equipped

Yellow Telltale Light	What It Means
	Service Stop/Start System Indicator Light This telltale will turn on to indicate the Stop/Start system is not functioning properly and service is required.

Service Forward Collision Warning (FCW) Light — If Equipped

Yellow Telltale Light	What It Means
	Service Forward Collision Warning Indicator Light This light indicates a potential system fault with the FCW system. Refer to “Forward Collision Warning” in “Safety” for further information.

Low Washer Fluid Indicator Light

Yellow Telltale Light	What It Means
	Low Washer Fluid Indicator Light This indicator will illuminate when the windshield washer fluid is low.

Service Adaptive Cruise Control (ACC) System Indicator Light

Yellow Telltale Light	What It Means
	Service Adaptive Cruise Control Indicator Light This light will turn on when a ACC is not operating and needs service. Refer to “Adaptive Cruise Control (ACC) — If Equipped” in “Starting And Operating” for further information.

4WD Low Indicator Light — If Equipped

Yellow Telltale Light	What It Means
4WD LOW	**4WD Low Indicator Light** This light alerts the driver that the vehicle is in the four-wheel drive LOW mode. The front and rear driveshafts are mechanically locked together forcing the front and rear wheels to rotate at the same speed. Low range provides a greater gear reduction ratio to provide increased torque at the wheels. Refer to “Four-Wheel Drive Operation — If Equipped” in “Starting And Operating” for further information on four-wheel drive operation and proper use.

Service 4WD Indicator Light — If Equipped

Yellow Telltale Light	What It Means
SVC 4WD	**Service 4WD Indicator Light** If the light stays on or comes on during driving, it means that the 4WD system is not functioning properly and that service is required. We recommend you drive to the nearest service center and have the vehicle serviced immediately.

NEUTRAL Indicator Light — If Equipped

Yellow Telltale Light	What It Means
NEUTRAL	**NEUTRAL Indicator Light** This light alerts the driver that the vehicle is in the NEUTRAL mode and the front and rear driveshafts are disengaged from the powertrain.

LaneSense Indicator Light — If Equipped

Yellow Telltale Light	What It Means
	LaneSense Indicator Light — If Equipped The LaneSense is solid yellow when the system senses a lane drift situation. The LaneSense is flashing yellow when the system senses the lane has been approached and is in a lane departure situation. Refer to "LaneSense — If Equipped" in "Starting And Operating" for further information.

LaneSense Failure Indicator Light — If Equipped

Yellow Telltale Light	What It Means
	LaneSense Failure Indicator Light This light will turn on when the LaneSense system is not operating and needs service. Please see your authorized dealer.

Rear Axle Lock Indicator Light

Yellow Telltale Light	What It Means
REAR	**Rear Axle Lock Indicator Light** This light indicates when the rear axle lock has been activated.

Loose Fuel Filler Cap Indicator Light — If Equipped

Yellow Telltale Light	What It Means
	Loose Fuel Filler Cap Indicator Light — If Equipped This light will illuminate when fuel filler cap is loose. Properly close the filler cap to disengage the light. If the light does not turn off, please see your authorized dealer.

Blue Telltale Lights

High Beam Indicator Light

Blue Telltale Light	What It Means
	High Beam Indicator Light This indicator shows that the high beam headlights are on. Push the multifunction control lever away from you to switch the headlights to high beam. Pull the lever toward you to switch the headlights back to low beam. Pull the lever toward you for a temporary high beam on, "flash to pass" scenario.

Green Telltale Lights

Park/Headlight On Indicator Light

Green Telltale Light	What It Means
	Park/Headlight On Indicator Light This indicator will illuminate when the park lights or headlights are turned on.

Front Fog Indicator Light — If Equipped

Green Telltale Light	What It Means
	Front Fog Indicator Light — If Equipped This indicator will illuminate when the front fog lights are on.

Turn Signal Warning Lights

Green Telltale Light	What It Means
	Turn Signal Indicator Lights The instrument cluster arrow will flash independently for the left or right turn signal as selected, as well as the exterior turn signal lamp(s) (front and rear) as selected when the multifunction lever is moved down (left) or up (right). **NOTE:** • A continuous chime will sound if the vehicle is driven more than 1 mile (1.6 km) with either turn signal on. • Check for an inoperative outside light bulb if either indicator flashes at a rapid rate.

Stop/Start Active Indicator Light — If Equipped

Green Telltale Light	What It Means
	Stop/Start Active Indicator Light This telltale will illuminate when the Stop/Start function is in “Autostop” mode.

LaneSense Indicator Light — If Equipped

Green Telltale Light	What It Means
	LaneSense Indicator Light The LaneSense indicator is solid green when both lane markings have been detected and the system is “armed” to provide visual warnings in the instrument cluster display and a torque warning in the steering wheel if an unintentional lane departure occurs. Refer to “LaneSense — If Equipped” in “Starting And Operating” for further information.

Cruise Control Set Indicator Light — If Equipped

Green Telltale Light	What It Means
	Cruise Control Set Indicator Light This light will turn on when the Speed Control is SET. Refer to “Speed Control — If Equipped” in “Starting And Operating” for further information.

Adaptive Cruise Control (ACC) Set With Target Detected Light — If Equipped

Green Telltale Light	What It Means
	Adaptive Cruise Control (ACC) Set With Target Detected Light — If Equipped This light will turn on when the Adaptive Cruise Control is SET and the target vehicle is detected. Refer to ″Adaptive Cruise Control (ACC) — If Equipped″ in ″Starting And Operating″ for further information.

Adaptive Cruise Control (ACC) Set With No Target Detected Light — If Equipped

Green Telltale Light	What It Means
	Adaptive Cruise Control (ACC) Set With No Target Detected Light — If Equipped This light will turn on when the Adaptive Cruise Control is SET and there is no target vehicle detected. Refer to "Adaptive Cruise Control (ACC) — If Equipped" in "Starting And Operating" for further information.

ECO Mode Indicator Light — If Equipped

Green Telltale Light	What It Means
eco	**ECO Mode Indicator Light** The ECO message will appear in your odometer whenever you are driving in a fuel efficient manner. This feature allows you to monitor when you are driving in a fuel efficient manner, and it can be used to modify driving habits in order to increase fuel economy.

White Telltale Lights

Cruise Control Ready Indicator Light

White Telltale Light	What It Means
	Cruise Control Ready Indicator Light This light will turn on when the speed control is on, but not set.

LaneSense Indicator Light — If Equipped

White Telltale Light	What It Means
	LaneSense Indicator Light — If Equipped When the LaneSense system is ON, the LaneSense indicator is solid white when only the left or right lane marking has been detected. When both lanes are detected the telltale will light up green, and the system will be ready to provide visual warnings in the instrument cluster display if an unintentional lane departure occurs. Refer to “LaneSense — If Equipped” in “Starting And Operating” for further information.

Hill Descent Control (HDC) Indicator Light — If Equipped

White Telltale Light	What It Means
	Hill Descent Control (HDC) Indicator Light This indicator shows when the Hill Descent Control (HDC) feature is turned on. The lamp will be on solid when HDC is armed. HDC can only be armed when the transfer case is in the “4WD LOW” position and the vehicle speed is less then 30 mph (48 km/h). If these conditions are not met while attempting to use the HDC feature, the HDC indicator light will flash on/off.

Cruise Control On Indicator Light

White Telltale Light	What It Means
CRUISE	**Cruise Control On Indicator Light** This indicator shows when the Speed Control System is turned on.

Selec Speed Control Indicator Light — If Equipped

White Telltale Light	What It Means
	Selec Speed Control Indicator Light This light will turn on when "Selec Speed Control" is activated. To activate "Selec Speed Control", assure the vehicle is Four Wheel Drive Low (4WD) and push the button on the Instrument Panel. **NOTE:** If the vehicle is not in 4WD Low, "To Enter Selec-Speed Shift to 4WD Low" will appear in the instrument cluster display.

Adaptive Cruise Control (ACC) Set Light — If Equipped

White Telltale Light	What It Means
	Adaptive Cruise Control (ACC) Set Light This light will turn on when the vehicle equipped with Adaptive Cruise Control (ACC) has reached the speed desired and the set button has been selected. Refer to "Adaptive Cruise Control" in "Starting And Operating" for further information.

Adaptive Cruise Control (ACC) Ready Light — If Equipped

White Telltale Light	What It Means
	Adaptive Cruise Control (ACC) Ready Light — If Equipped This light will turn on when the vehicle equipped with Adaptive Cruise Control (ACC) has been turned on and in the READY state. Refer to "Adaptive Cruise Control (ACC) — If Equipped" in "Starting And Operating" for further information.

ONBOARD DIAGNOSTIC SYSTEM — OBD II

Your vehicle is equipped with a sophisticated Onboard Diagnostic system called OBD II. This system monitors the performance of the emissions, engine, and transmission control systems. When these systems are operating properly, your vehicle will provide excellent performance and fuel economy, as well as engine emissions well within current government regulations.

If any of these systems require service, the OBD II system will turn on the Malfunction Indicator Light (MIL). It will also store diagnostic codes and other information to assist your service technician in making repairs. Although your vehicle will usually be drivable and not need towing, see your authorized dealer for service as soon as possible.

CAUTION!

- **Prolonged driving with the MIL on could cause further damage to the emission control system. It could also affect fuel economy and driveability. The vehicle must be serviced before any emissions tests can be performed.**
- **If the MIL is flashing while the vehicle is running, severe catalytic converter damage and power loss will soon occur. Immediate service is required.**

Onboard Diagnostic System (OBD II) Cybersecurity

Your vehicle is required to have an Onboard Diagnostic system (OBD II) and a connection port to allow access to information related to the performance of your emissions

controls. Authorized service technicians may need to access this information to assist with the diagnosis and service of your vehicle and emissions system.

WARNING!

- **ONLY an authorized service technician should connect equipment to the OBD II connection port in order to diagnose or service your vehicle.**
- **If unauthorized equipment is connected to the OBD II connection port, such as a driver-behavior tracking device, it may:**
  - **Be possible that vehicle systems, including safety related systems, could be impaired or a loss of vehicle control could occur that may result in an accident involving serious injury or death.**
  - **Access, or allow others to access, information stored in your vehicle systems, including personal information.**

For further information, refer to “Cybersecurity” in “Multimedia”.

EMISSIONS INSPECTION AND MAINTENANCE PROGRAMS

In some localities, it may be a legal requirement to pass an inspection of your vehicle’s emissions control system. Failure to pass could prevent vehicle registration.

For states that require an Inspection and Maintenance (I/M), this check verifies the “Malfunction Indicator Light (MIL)” is functioning and is not on when the engine is running, and that the OBD II system is ready for testing.

Normally, the OBD II system will be ready. The OBD II system may **not** be ready if your vehicle was recently serviced, recently had a dead battery or a battery replacement. If the OBD II system should be determined not ready for the I/M test, your vehicle may fail the test.

Your vehicle has a simple ignition actuated test, which you can use prior to going to the test station. To check if your vehicle’s OBD II system is ready, you must do the following:

1. Cycle the ignition switch to the ON position, but do not crank or start the engine.

NOTE: If you crank or start the engine, you will have to start this test over.

2. As soon as you cycle the ignition switch to the ON position, you will see the "Malfunction Indicator Light (MIL)" symbol come on as part of a normal bulb check.

3. Approximately 15 seconds later, one of two things will happen:

- The MIL will flash for about 10 seconds and then return to being fully illuminated until you turn OFF the ignition or start the engine. This means that your vehicle's OBD II system is **not ready** and you should **not** proceed to the I/M station.

- The MIL will not flash at all and will remain fully illuminated until you place the ignition in the off position or start the engine. This means that your vehicle's OBD II system is **ready** and you can proceed to the I/M station.

If your OBD II system is **not ready,** you should see your authorized dealer or repair facility. If your vehicle was recently serviced or had a battery failure or replacement, you may need to do nothing more than drive your vehicle as you normally would in order for your OBD II system to update. A recheck with the above test routine may then indicate that the system is **now ready**.

Regardless of whether your vehicle's OBD II system is ready or not, if the MIL is illuminated during normal vehicle operation you should have your vehicle serviced before going to the I/M station. The I/M station can fail your vehicle because the MIL is on with the engine running.

SAFETY

CONTENTS

■ SAFETY FEATURES 170

- □ Anti-Lock Brake System (ABS) 170
- □ Electronic Brake Control System 171

■ AUXILIARY DRIVING SYSTEMS 186

- □ Blind Spot Monitoring (BSM) — If Equipped . . .186
- □ Forward Collision Warning (FCW) With Mitigation — If Equipped 193
- □ Tire Pressure Monitor System (TPMS) 196

■ OCCUPANT RESTRAINT SYSTEMS 202

- □ Occupant Restraint Systems Features 203
- □ Important Safety Precautions 203
- □ Seat Belt Systems 204
- □ Supplemental Restraint Systems (SRS) 214
- □ Child Restraints 233
- □ Transporting Pets 250

■ SAFETY TIPS 251

- □ Transporting Passengers 251
- □ Exhaust Gas 251
- □ Safety Checks You Should Make Inside The Vehicle 252
- □ Periodic Safety Checks You Should Make Outside The Vehicle 254

SAFETY FEATURES

Anti-Lock Brake System (ABS)

The Anti-Lock Brake System (ABS) provides increased vehicle stability and brake performance under most braking conditions. The system automatically prevents wheel lock, and enhances vehicle control during braking.

The ABS performs a self-check cycle to ensure that the ABS is working properly each time the vehicle is started and driven. During this self-check, you may hear a slight clicking sound as well as some related motor noises.

ABS is activated during braking when the system detects one or more wheels begin to lock. Road conditions such as ice, snow, gravel, bumps, railroad tracks, loose debris, or panic stops may increase the likelihood of ABS activation(s).

You also may experience the following when ABS activates:

- The ABS motor noise (it may continue to run for a short time after the stop).
- The clicking sound of solenoid valves.
- Brake pedal pulsations.
- A slight drop of the brake pedal at the end of the stop.

These are all normal characteristics of ABS.

WARNING!

- **The ABS contains sophisticated electronic equipment that may be susceptible to interference caused by improperly installed or high output radio transmitting equipment. This interference can cause possible loss of anti-lock braking capability. Installation of such equipment should be performed by qualified professionals.**
- **Pumping of the Anti-Lock Brakes will diminish their effectiveness and may lead to a collision. Pumping makes the stopping distance longer. Just press firmly on your brake pedal when you need to slow down or stop.**
- **The ABS cannot prevent the natural laws of physics from acting on the vehicle, nor can it increase braking or steering efficiency beyond that afforded by the condition of the vehicle brakes and tires or the traction afforded.**
- **The ABS cannot prevent collisions, including those resulting from excessive speed in turns, following another vehicle too closely, or hydroplaning.**

(Continued)

WARNING! *(Continued)*

- **The capabilities of an ABS equipped vehicle must never be exploited in a reckless or dangerous manner that could jeopardize the user's safety or the safety of others.**

ABS is designed to function with the OEM tires. Modification may result in degraded ABS performance.

Anti-Lock Brake Warning Light

The yellow "Anti-Lock Brake Warning Light" will turn on when the ignition is turned to the ON/RUN mode and may stay on for as long as four seconds.

If the "Anti-Lock Brake Warning Light" remains on or comes on while driving, it indicates that the anti-lock portion of the brake system is not functioning and that service is required. However, the conventional brake system will continue to operate normally if the "Brake System Warning Light" is not on.

If the "Anti-Lock Brake Warning Light" is on, the brake system should be serviced as soon as possible to restore the benefits of anti-lock brakes. If the "Anti-Lock Brake Warning Light" does not come on when the ignition is turned to the ON/RUN mode, have the light repaired as soon as possible.

Electronic Brake Control System

Your vehicle is equipped with an advanced Electronic Brake Control system (EBC). This system includes Electronic Brake Force Distribution (EBD), Anti-Lock Brake System (ABS), Brake Assist System (BAS), Hill Start Assist (HSA), Traction Control System (TCS), Electronic Stability Control (ESC), and Electronic Roll Mitigation (ERM). These systems work together to enhance both vehicle stability and control in various driving conditions.

Your vehicle may also be equipped with Trailer Sway Control (TSC), Ready Alert Braking (RAB), Rain Brake Support (RBS), Dynamic Steering Torque (DST), Hill Descent Control (HDC), and Selec-Speed Control (SSC).

Electronic Brake Force Distribution (EBD)

This function manages the distribution of the braking torque between the front and rear axles by limiting braking pressure to the rear axle. This is done to prevent overslip of the rear wheels to avoid vehicle instability, and to prevent the rear axle from entering ABS before the front axle.

Brake System Warning Light

The red "Brake System Warning Light" will turn on when the ignition is turned to the ON/RUN mode and may stay on for as long as four seconds.

If the "Brake System Warning Light" remains on or comes on while driving, it indicates that the brake system is not functioning properly and that immediate service is required. If the "Brake System Warning Light" does not come on when the ignition is turned to the ON/RUN mode, have the light repaired as soon as possible.

Brake Assist System (BAS)

The BAS is designed to optimize the vehicle's braking capability during emergency braking maneuvers. The system detects an emergency braking situation by sensing the rate and amount of brake application and then applies optimum pressure to the brakes. This can help reduce braking distances. The BAS complements the anti-lock brake system (ABS). Applying the brakes very quickly results in the best BAS assistance. To receive the benefit of the system, you must apply continuous braking pressure during the stopping sequence, (do not "pump" the brakes). Do not reduce brake pedal pressure unless braking is no longer desired. Once the brake pedal is released, the BAS is deactivated.

WARNING!

The Brake Assist System (BAS) cannot prevent the natural laws of physics from acting on the vehicle, nor can it increase the traction afforded by prevailing road conditions. BAS cannot prevent collisions, including those resulting from excessive speed in turns, driving on very slippery surfaces, or hydroplaning. The capabilities of a BAS-equipped vehicle must never be exploited in a reckless or dangerous manner, which could jeopardize the user's safety or the safety of others.

Hill Start Assist (HSA)

The HSA system is designed to mitigate roll back from a complete stop while on an incline. If the driver releases the brake while stopped on an incline, HSA will continue to hold the brake pressure for a short period. If the driver does not apply the throttle before this time expires, the system will release brake pressure and the vehicle will roll down the hill as normal.

The following conditions must be met in order for HSA to activate:

- The feature must be enabled.
- The vehicle must be stopped.
- Park brake must be off.
- Driver door must be closed.
- The vehicle must be on a sufficient grade.
- The gear selection must match vehicle uphill direction (i.e., vehicle facing uphill is in forward gear; vehicle backing uphill is in REVERSE gear).
- HSA will work in REVERSE gear and all forward gears. The system will not activate if the transmission is in PARK or NEUTRAL. For vehicles equipped with a manual transmission, if the clutch is pressed, HSA will remain active.

WARNING!

There may be situations where the Hill Start Assist (HSA) will not activate and slight rolling may occur, such as on minor hills or with a loaded vehicle, or

(Continued)

WARNING! *(Continued)*

while pulling a trailer. HSA is not a substitute for active driving involvement. It is always the driver's responsibility to be attentive to distance to other vehicles, people, and objects, and most importantly brake operation to ensure safe operation of the vehicle under all road conditions. Your complete attention is always required while driving to maintain safe control of your vehicle. Failure to follow these warnings can result in a collision or serious personal injury.

Disabling And Enabling HSA

This feature can be turned on or turned off. To change the current setting, proceed as follows:

- If disabling HSA using your instrument cluster display, refer to "Instrument Cluster Display" in "Getting To Know Your Instrument Panel" for further information.
- If disabling HSA using Uconnect Settings, refer to "Uconnect Settings" in "Multimedia" for further information.

For vehicles not equipped with an instrument cluster display, perform the following steps:

1. Center the steering wheel (front wheels pointing straight forward).
2. Shift the transmission into PARK.
3. Apply the parking brake.
4. Start the engine.
5. Rotate the steering wheel slightly more than one-half turn to the left.
6. Push the "ESC Off" button located in the lower switch bank below the climate control four times within 20 seconds. The "ESC Off Indicator Light" should turn on and turn off two times.
7. Rotate the steering wheel back to center and then an additional slightly more than one-half turn to the right.
8. Turn the ignition to the OFF mode and then back to ON. If the sequence was completed properly, the "ESC Off Indicator Light" will blink several times to confirm HSA is disabled.
9. Repeat these steps if you want to return this feature to its previous setting.

Towing With HSA

HSA will also provide assistance to mitigate roll back while towing a trailer.

WARNING!

- **If you use a trailer brake controller with your trailer, the trailer brakes may be activated and deactivated with the brake switch. If so, there may not be enough brake pressure to hold both the vehicle and the trailer on a hill when the brake pedal is released. In order to avoid rolling down an incline while resuming acceleration, manually activate the trailer brake or apply more vehicle brake pressure prior to releasing the brake pedal.**
- **HSA is not a parking brake. Always apply the parking brake fully when exiting your vehicle. Also, be certain to place the transmission in PARK.**
- **Failure to follow these warnings can result in a collision or serious personal injury.**

Traction Control System (TCS)

This system monitors the amount of wheel spin of each of the driven wheels. If wheel spin is detected, the TCS may apply brake pressure to the spinning wheel(s) and/or

reduce engine power to provide enhanced acceleration and stability. A feature of the TCS, Brake Limited Differential (BLD), functions similar to a limited slip differential and controls the wheel spin across a driven axle. If one wheel on a driven axle is spinning faster than the other, the system will apply the brake of the spinning wheel. This will allow more engine torque to be applied to the wheel that is not spinning. BLD may remain enabled even if TCS and ESC are in a reduced mode.

Electronic Stability Control (ESC)

This system enhances directional control and stability of the vehicle under various driving conditions. ESC corrects for oversteering or understeering of the vehicle by applying the brake of the appropriate wheel(s) to assist in counteracting the oversteer or understeer condition. Engine power may also be reduced to help the vehicle maintain the desired path.

ESC uses sensors in the vehicle to determine the vehicle path intended by the driver and compares it to the actual path of the vehicle. When the actual path does not match the intended path, ESC applies the brake of the appropriate wheel to assist in counteracting the oversteer or understeer condition.

- Oversteer — when the vehicle is turning more than appropriate for the steering wheel position.
- Understeer — when the vehicle is turning less than appropriate for the steering wheel position.

The "ESC Activation/Malfunction Indicator Light" located in the instrument cluster will start to flash as soon as the ESC system becomes active. The "ESC Activation/Malfunction Indicator Light" also flashes when the TCS is active. If the "ESC Activation/Malfunction Indicator Light" begins to flash during acceleration, ease up on the accelerator and apply as little throttle as possible. Be sure to adapt your speed and driving to the prevailing road conditions.

WARNING!

- **Electronic Stability Control (ESC) cannot prevent the natural laws of physics from acting on the vehicle, nor can it increase the traction afforded by prevailing road conditions. ESC cannot prevent accidents, including those resulting from excessive speed in turns, driving on very slippery surfaces, or hydroplaning. ESC also cannot prevent accidents resulting**

(Continued)

WARNING! *(Continued)*

from loss of vehicle control due to inappropriate driver input for the conditions. Only a safe, attentive, and skillful driver can prevent accidents. The capabilities of an ESC equipped vehicle must never be exploited in a reckless or dangerous manner which could jeopardize the user's safety or the safety of others.

- **Vehicle modifications, or failure to properly maintain your vehicle, may change the handling characteristics of your vehicle, and may negatively affect the performance of the ESC system. Changes to the steering system, suspension, braking system, tire type and size or wheel size may adversely affect ESC performance. Improperly inflated and unevenly worn tires may also degrade ESC performance. Any vehicle modification or poor vehicle maintenance that reduces the effectiveness of the ESC system can increase the risk of loss of vehicle control, vehicle rollover, personal injury and death.**

ESC Operating Modes

NOTE: Depending upon model and mode of operation, the ESC system may have multiple operating modes.

ESC On

This is the normal operating mode for the ESC. Whenever the vehicle is started, the ESC system will be in this mode. This mode should be used for most driving conditions. Alternate ESC modes should only be used for specific reasons as noted in the following paragraphs.

Partial Off

The "Partial Off" mode is intended for times when a more spirited driving experience is desired. This mode may modify TCS and ESC thresholds for activation, which allows for more wheel spin than normally allowed. This mode may be useful if the vehicle becomes stuck.

To enter the "Partial Off" mode, momentarily push the "ESC Off" switch and the "ESC Off Indicator Light" will illuminate. To turn the ESC on again, momentarily push the "ESC Off" switch and the "ESC Off Indicator Light" will turn off.

NOTE: For vehicles with multiple partial ESC modes a momentary button push will toggle the ESC mode. Multiple momentary button pushed may be required to return to ESC On.

WARNING!

- **When in "Partial Off" mode, the TCS functionality of ESC, (except for the limited slip feature described in the TCS section), has been disabled and the "ESC Off Indicator Light" will be illuminated. When in "Partial Off" mode, the engine power reduction feature of TCS is disabled, and the enhanced vehicle stability offered by the ESC system is reduced.**
- **Trailer Sway control (TSC) is disabled when the ESC system is in the "Partial Off" mode.**

Full Off — If Equipped

This mode is intended for off-highway or off-road use only and should not be used on any public roadways. In this mode, TCS and ESC features are turned OFF. To enter the "Full Off" mode, push and hold the "ESC Off" switch for five seconds while the vehicle is stopped with the engine running. After five seconds, a chime will sound, the "ESC Off Indicator Light" will illuminate, and the "ESC OFF" message will display in the instrument cluster. To turn ESC ON again, momentarily push the "ESC Off" switch.

NOTE: System may switch from ESC "Full Off" to "Partial Off" mode when vehicle exceeds a predetermined speed. When the vehicle speed slows below the predetermined speed the system will return to ESC "Full Off".

"Full Off" can only be achieved in Track Mode if so equipped.

ESC modes may also be affected by drive modes if so equipped.

WARNING!

- **In the ESC "Full Off" mode, the engine torque reduction and stability features are disabled. Therefore, enhanced vehicle stability offered by the ESC system is unavailable. In an emergency evasive maneuver, the ESC system will not engage to assist in maintaining stability. ESC "Full Off" mode is intended for off-highway or off-road use only.**
- **With the ESC switched off, the enhanced vehicle stability offered by ESC is unavailable. In an emergency evasive maneuver, the ESC system will not engage to assist in maintaining stability. ESC "Full Off" mode is only intended for off-highway or off-road use.**

(Continued)

WARNING! ***(Continued)***

- **The Electronic Stability Control (ESC) cannot prevent the natural laws of physics from acting on the vehicle, nor can it increase the traction afforded by prevailing road conditions. ESC cannot prevent all accidents, including those resulting from excessive speed in turns, driving on very slippery surfaces, or hydroplaning. ESC also cannot prevent collisions.**

ESC Activation/Malfunction Indicator Light and ESC OFF Indicator Light

The "ESC Activation/Malfunction Indicator Light" in the instrument cluster will come on when the ignition is turned to the ON mode. It should go out with the engine running. If the "ESC Activation/Malfunction Indicator Light" comes on continuously with the engine running, a malfunction has been detected in the ESC system. If this light remains on after several ignition cycles, and the vehicle has been driven several miles (kilometers) at speeds greater than 30 mph (48 km/h), see your authorized dealer as soon as possible to have the problem diagnosed and corrected.

The "ESC Activation/Malfunction Indicator Light" (located in the instrument cluster) starts to flash as soon as the tires lose traction and the ESC system becomes active. The "ESC Activation/Malfunction Indicator Light" also flashes when TCS is active. If the "ESC Activation/Malfunction Indicator Light" begins to flash during acceleration, ease up on the accelerator and apply as little throttle as possible. Be sure to adapt your speed and driving to the prevailing road conditions.

NOTE:

- The "ESC Activation/Malfunction Indicator Light" and the "ESC OFF Indicator Light" come on momentarily each time the ignition is turned ON.
- Each time the ignition is turned ON, the ESC system will be on even if it was turned off previously.
- The ESC system will make buzzing or clicking sounds when it is active. This is normal; the sounds will stop when ESC becomes inactive following the maneuver that caused the ESC activation.

The "ESC OFF Indicator Light" indicates the customer has elected to have the Electronic Stability Control (ESC) in a reduced mode.

Electronic Roll Mitigation (ERM)

This system anticipates the potential for wheel lift by monitoring the driver's steering wheel input and the speed of the vehicle. When ERM determines that the rate of change of the steering wheel angle and vehicle's speed are sufficient to potentially cause wheel lift, it then applies the appropriate brake and may also reduce engine power to lessen the chance that wheel lift will occur. ERM can only reduce the chance of wheel lift occurring during severe or evasive driving maneuvers; it cannot prevent wheel lift due to other factors, such as road conditions, leaving the roadway, or striking objects or other vehicles.

NOTE: ERM is disabled anytime the ESC is in "Full Off" mode (if equipped). Refer to "Electronic Stability Control (ESC)" in this section for a complete explanation of the available ESC modes.

WARNING!

Many factors, such as vehicle loading, road conditions and driving conditions, influence the chance that wheel lift or rollover may occur. ERM cannot prevent all wheel lift or roll overs, especially those that involve

(Continued)

WARNING! *(Continued)*

leaving the roadway or striking objects or other vehicles. The capabilities of an ERM-equipped vehicle must never be exploited in a reckless or dangerous manner which could jeopardize the user's safety or the safety of others.

Trailer Sway Control (TSC)

TSC uses sensors in the vehicle to recognize an excessively swaying trailer and will take the appropriate actions to attempt to stop the sway. TSC will become active automatically once an excessively swaying trailer is recognized.

NOTE: TSC cannot stop all trailers from swaying. Always use caution when towing a trailer and follow the trailer tongue weight recommendations. Refer to "Trailer Towing" in "Starting And Operating" for further information.

When TSC is functioning, the "ESC Activation/ Malfunction Indicator Light" will flash, the engine power may be reduced and you may feel the brakes being applied to individual wheels to attempt to stop the trailer from swaying. TSC is disabled when the ESC system is in the "Partial Off" or "Full Off" modes.

WARNING!

If TSC activates while driving, slow the vehicle down, stop at the nearest safe location, and adjust the trailer load to eliminate trailer sway.

Ready Alert Braking (RAB)

Ready Alert Braking may reduce the time required to reach full braking during emergency braking situations. It anticipates when an emergency braking situation may occur by monitoring how fast the throttle is released by the driver. The EBC will prepare the brake system for a panic stop.

Rain Brake Support (RBS)

Rain Brake Support may improve braking performance in wet conditions. It will periodically apply a small amount of brake pressure to remove any water buildup on the front brake rotors. It functions when the windshield wipers are in LO or HI speed. When Rain Brake Support is active, there is no notification to the driver and no driver interaction is required.

Dynamic Steering Torque (DST)

Dynamic Steering Torque is a feature of the ESC and Electric Power Steering (EPS) modules that provides torque at the steering wheel for certain driving conditions in which the ESC module is detecting vehicle instability. The torque that the steering wheel receives is only meant to help the driver realize optimal steering behavior in order to reach/maintain vehicle stability. The only notification the driver receives that the feature is active is the torque applied to the steering wheel.

NOTE: The DST feature is only meant to help the driver realize the correct course of action through small torques on the steering wheel, which means the effectiveness of the DST feature is highly dependent on the driver's sensitivity and overall reaction to the applied torque. It is very important to realize that this feature will not steer the vehicle, meaning the driver is still responsible for steering the vehicle.

Hill Descent Control (HDC) — If Equipped

HDC is intended for low speed off road driving while in 4WD Low Range. HDC maintains vehicle speed while descending hills during various driving situations. HDC controls vehicle speed by actively controlling the brakes.

HDC has three states:

1. Off (feature is not enabled and will not activate).
2. Enabled (feature is enabled and ready but activation conditions are not met, or driver is actively overriding with brake or throttle application).
3. Active (feature is enabled and actively controlling vehicle speed).

Enabling HDC

HDC is enabled by pushing the HDC switch, but the following conditions must also be met to enable HDC:

- Driveline is in 4WD Low Range
- Vehicle speed is below 5 mph (8 km/h).
- Parking brake is released.
- Driver door is closed.

Activating HDC

Once HDC is enabled it will activate automatically if driven down a grade of sufficient magnitude. The set speed for HDC is selectable by the driver, and can be adjusted by using the gear shift +/-. The following summarizes the HDC set speeds:

HDC Target Set Speeds

- P = No set speed. HDC may be enabled but will not activate
- R = 0.6 mph (1 km/h)
- N = 1.2 mph (2 km/h)
- D = 0.6 mph (1 km/h)
- 1st = 0.6 mph (1 km/h)
- 2nd = 1.2 mph (2 km/h)
- 3rd = 1.8 mph (3 km/h)
- 4th = 2.5 mph (4 km/h)
- 5th = 3.1 mph (5 km/h)
- 6th = 3.7 mph (6 km/h)
- 7th = 4.3 mph (7 km/h)
- 8th = 5.0 mph (8 km/h)
- 9th = 5.6 mph (9 km/h) – If Equipped

NOTE: During HDC the +/- shifter input is used for HDC target speed selection, but will not affect the gear chosen by the transmission. When actively controlling HDC the transmission will shift appropriately for the driver-selected set speed and corresponding driving conditions.

Driver Override

The driver may override HDC activation with throttle or brake application at anytime.

Deactivating HDC

HDC will be deactivated but remain available if any of the following conditions occur:

- Driver overrides HDC set speed with throttle or brake application.
- Vehicle speed exceeds 20 mph (32 km/h) but remains below 40 mph (64 km/h).
- Vehicle is on a downhill grade of insufficient magnitude, is on level ground, or is on an uphill grade.
- Vehicle is shifted to park.

Disabling HDC

HDC will be deactivated and disabled if any of the following conditions occur:

- The driver pushes the HDC switch.
- The driveline is shifted out of 4WD Low Range.
- The parking brake is applied.
- Driver door opens.
- The vehicle is driven greater than 20 mph (32 km/h) for greater than 70 seconds.
- The vehicle is driven greater than 40 mph (64 km/h) (HDC exits immediately).
- HDC detects excessive brake temperature.

Feedback To The Driver

The instrument cluster has an HDC icon and the HDC switch has an LED icon, which offers feedback to the driver about the state HDC is in.

- The cluster icon and switch lamp will illuminate and remain on solid when HDC is enabled or activated. This is the normal operating condition for HDC.
- The cluster icon and switch lamp will flash for several seconds then extinguish when the driver pushes the HDC switch but enable conditions are not met.
- The cluster icon and switch lamp will flash for several seconds then extinguish when HDC disables due to excess speed.

- The cluster icon and switch lamp will flash when HDC deactivates due to overheated brakes. The flashing will stop and HDC will activate again once the brakes have cooled sufficiently.

WARNING!

HDC is only intended to assist the driver in controlling vehicle speed when descending hills. The driver must remain attentive to the driving conditions and is responsible for maintaining a safe vehicle speed.

Selec Speed Control (SSC) — If Equipped

SSC is intended for off road driving in 4WD Low Range only. SSC maintains vehicle speed by actively controlling engine torque and brakes.

SSC has three states:

1. Off (feature is not enabled and will not activate).
2. Enabled (feature is enabled and ready but activation conditions are not met, or driver is actively overriding with brake or throttle application).
3. Active (feature is enabled and actively controlling vehicle speed).

Enabling SSC

SSC is enabled by pushing the SSC switch, but the following conditions must also be met to enable SSC:

- Driveline is in 4WD Low Range.
- Vehicle speed is below 5 mph (8 km/h).
- Parking brake is released.
- Driver door is closed.
- Driver is not applying throttle.

Activating SSC

Once SSC is enabled it will activate automatically once the following conditions are met:

- Driver releases throttle.
- Driver releases brake.
- Transmission is in any selection other than P.
- Vehicle speed is below 20 mph (32 km/h).

The set speed for SSC is selectable by the driver, and can be adjusted by using the gear shift +/-. Additionally, the SSC set speed may be reduced when climbing a grade and the level of set speed reduction depends on the magnitude of grade. The following summarizes the SSC set speeds:

SSC Target Set Speeds

- 1st = .6 mph (1 km/h)
- 2nd = 1.2 mph (2 km/h)
- 3rd = 1.8 mph (3 km/h)
- 4th = 2.5 mph (4 km/h)
- 5th = 3.1 mph (5 km/h)
- 6th = 3.7 mph (6 km/h)
- 7th = 4.3 mph (7 km/h)
- 8th = 5 mph (8 km/h)
- 9th = 5.6 mph (9 km/h) – If Equipped
- REVERSE = .6 mph (1 km/h)
- NEUTRAL = 1.2 mph (2 km/h)
- PARK = SSC remains enabled but not active

NOTE:

- During SSC the +/- shifter input is used for SSC target speed selection but will not affect the gear chosen by the transmission. While actively controlling SSC the transmission will shift appropriately for the driver-selected set speed and corresponding driving conditions.
- SSC performance is influenced by the Terrain Select mode. This difference may be notable to the driver and may be perceived as a varying level of aggressiveness.

Driver Override:

The driver may override SSC activation with throttle or brake application at any time.

Deactivating SSC

SSC will be deactivated but remain available if any of the following conditions occur:

- Driver overrides SSC set speed with throttle or brake application.
- Vehicle speed exceeds 20 mph (32 km/h) but remains below 40 mph (64 km/h).
- Vehicle is shifted to PARK.

Disabling SSC

SSC will deactivate and be disabled if any of the following conditions occur:

- The driver pushes the SSC switch.
- The driveline is shifted out of 4WD Low Range.
- The parking brake is applied.
- Driver door opens.
- The vehicle is driven greater than 20 mph (32 km/h) for greater than 70 seconds.
- The vehicle is driven greater than 40 mph (64 km/h) (SSC exits immediately).

Feedback To The Driver:

The instrument cluster has an SSC icon and the SSC switch has an LED which offer feedback to the driver about the state SSC is in.

- The cluster icon and switch lamp will illuminate and remain on solid when SSC is enabled or activated. This is the normal operating condition for SSC.
- The cluster icon and switch lamp will flash for several seconds then extinguish when the driver pushes the SSC switch but enable conditions are not met.
- The cluster icon and switch lamp will flash for several seconds then extinguish when SSC disables due to excess speed.
- The cluster icon and switch lamp will flash then extinguish when SSC deactivates due to overheated brakes.

WARNING!

SSC is only intended to assist the driver in controlling vehicle speed when driving in off road conditions. The driver must remain attentive to the driving conditions and is responsible for maintaining a safe vehicle speed.

AUXILIARY DRIVING SYSTEMS

Blind Spot Monitoring (BSM) — If Equipped

The Blind Spot Monitoring (BSM) system uses two radar-based sensors, located inside the rear bumper fascia, to detect highway licensable vehicles (automobiles, trucks, motorcycles, etc.) that enter the blind spot zones from the rear/front/side of the vehicle.

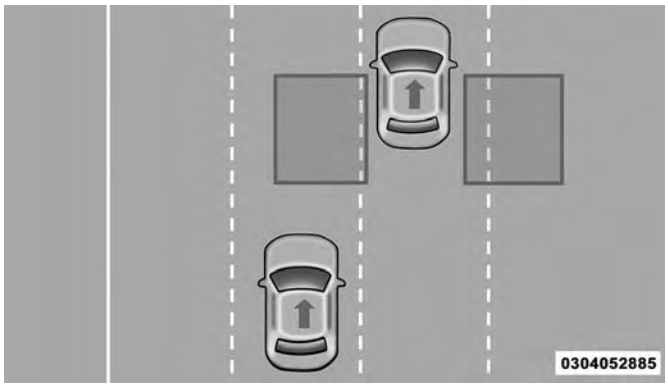

Rear Detection Zones

When the vehicle is started, the BSM warning light will momentarily illuminate in both outside rear view mirrors to let the driver know that the system is operational. The BSM system sensors operate when the vehicle is in any forward gear or REVERSE and enters stand-by mode when the vehicle is in PARK.

The BSM detection zone covers approximately one lane width on both sides of the vehicle 12 ft (3.8 m). The zone length starts at the outside mirror and extends approximately 10 ft (3 m) beyond the rear bumper of the vehicle. The BSM system monitors the detection zones on both sides of the vehicle when the vehicle speed reaches approximately 6 mph (10 km/h) or higher and will alert the driver of vehicles in these areas.

NOTE:

- The BSM system does NOT alert the driver about rapidly approaching vehicles that are outside the detection zones.
- The BSM system detection zone does NOT change if your vehicle is towing a trailer. Therefore, visually verify the adjacent lane is clear for both your vehicle and trailer before making a lane change. If the trailer or other object (i.e., bicycle, sports equipment) extends beyond the side of your vehicle, this may result in the BSM warning light remaining illuminated the entire time the vehicle is in a forward gear.

The area on the rear fascia where the radar sensors are located must remain free of snow, ice, and dirt/road contamination so that the BSM system can function properly. Do not block the area of the rear fascia where the radar sensors are located with foreign objects (bumper stickers, bicycle racks, etc.)

The BSM system will provide a visual alert in the appropriate side view mirror based on a detected object. If the turn signal is then activated, and it corresponds to an alert present on that side of the vehicle, an audible chime will also be sounded. Whenever a turn signal and detected object are present on the same side at the same time, both the visual and audio alerts will be issued. In addition to the audible alert the radio (if on) will also be muted.

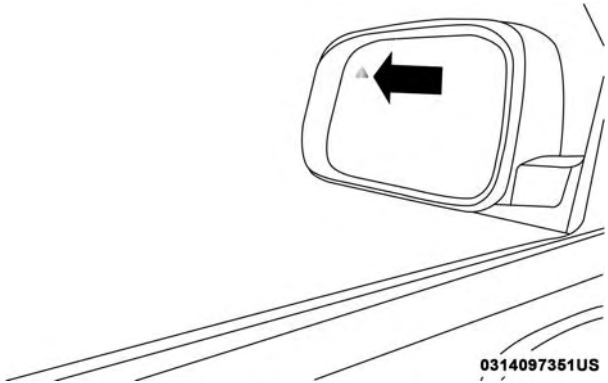

Warning Light Location

The BSM system monitors the detection zone from three different entry points (side, rear, front) while driving to see if an alert is necessary. The BSM system will issue an alert during these types of zone entries.

Entering From The Side

Vehicles that move into your adjacent lanes from either side of the vehicle.

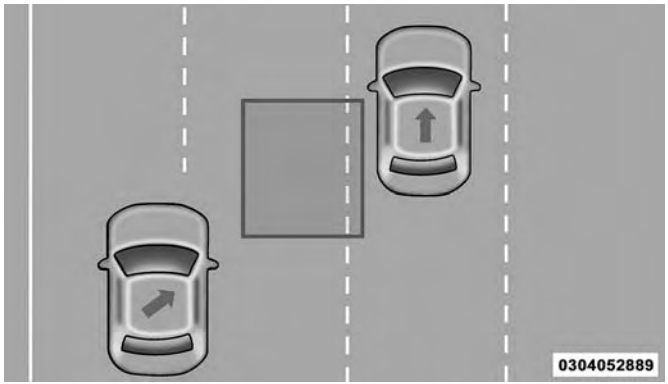

Side Monitoring

Entering From The Rear

Vehicles that come up from behind your vehicle on either side and enter the rear detection zone with a relative speed of less than 30 mph (48 km/h).

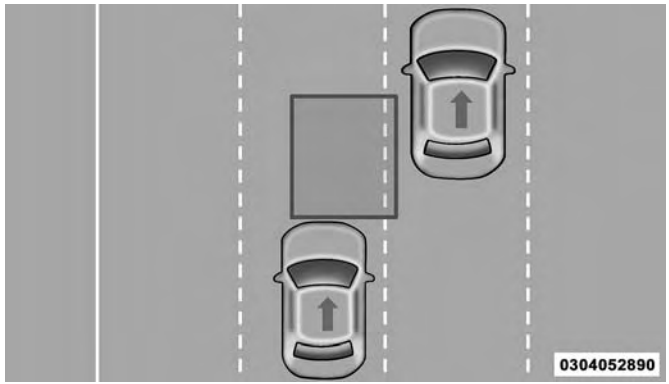

Rear Monitoring

Overtaking Traffic

If you pass another vehicle slowly with a relative speed less than 15 mph (24 km/h) and the vehicle remains in the blind spot for approximately 1.5 seconds, the warning light will be illuminated. If the difference in speed between the two vehicles is greater than 15 mph (24 km/h), the warning light will not illuminate.

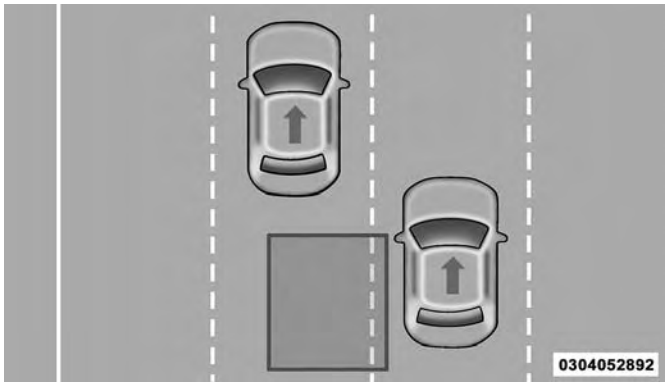

Overtaking/Approaching

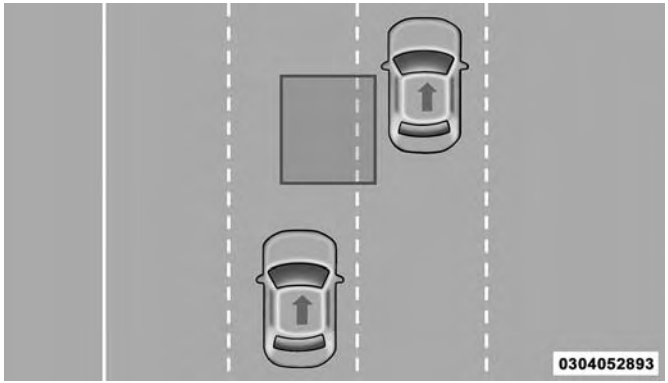

Overtaking/Passing

The BSM system is designed not to issue an alert on stationary objects such as guardrails, posts, walls, foliage, berms, etc. However, occasionally the system may alert on such objects. This is normal operation and your vehicle does not require service.

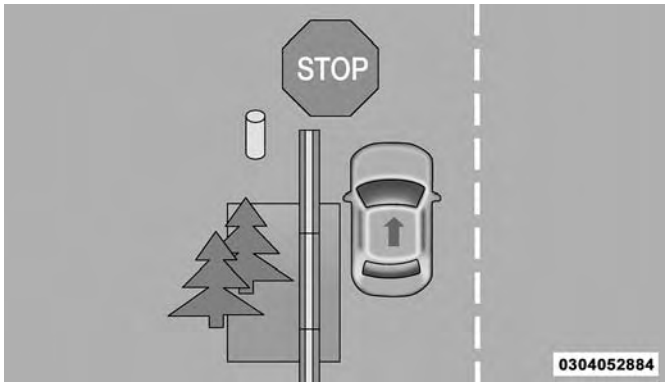

Stationary Objects

The BSM system will not alert you of objects that are traveling in the opposite direction of the vehicle in adjacent lanes.

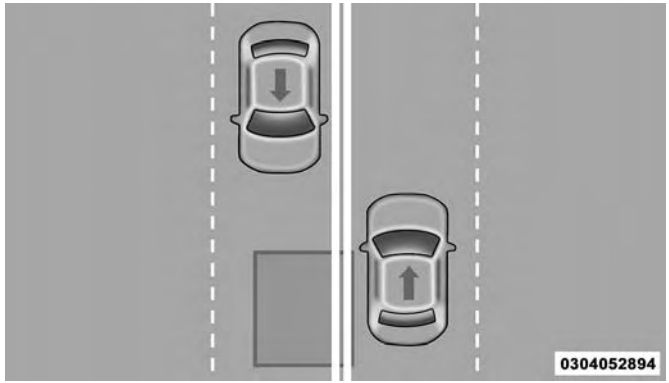

Opposing Traffic

WARNING!

The Blind Spot Monitoring system is only an aid to help detect objects in the blind spot zones. The BSM system is not designed to detect pedestrians, bicyclists, or animals. Even if your vehicle is equipped with the BSM system, always check your vehicle's mirrors, glance over your shoulder, and use your turn signal before changing lanes. Failure to do so can result in serious injury or death.

Rear Cross Path (RCP)

The Rear Cross Path (RCP) feature is intended to aid the driver when backing out of parking spaces where their vision of oncoming vehicles may be blocked. Proceed slowly and cautiously out of the parking space until the rear end of the vehicle is exposed. The RCP system will then have a clear view of the cross traffic and if an oncoming vehicle is detected, alert the driver.

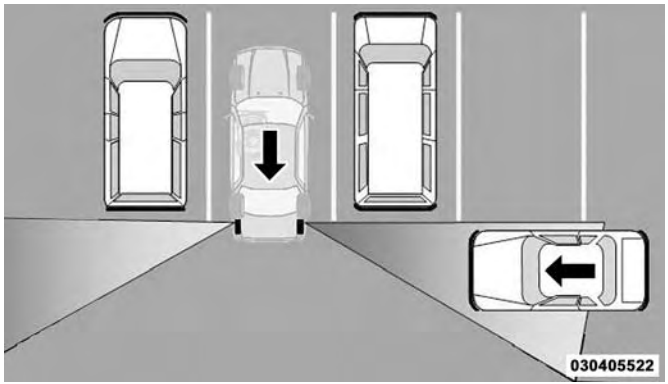

RCP Detection Zones

RCP monitors the rear detection zones on both sides of the vehicle, for objects that are moving toward the side of the vehicle with a minimum speed of approximately 3 mph (5 km/h), to objects moving a maximum of approximately 20 mph (32 km/h), such as in parking lot situations.

NOTE: In a parking lot situation, oncoming vehicles can be obscured by vehicles parked on either side. If the sensors are blocked by other structures or vehicles, the system will not be able to alert the driver.

When RCP is on and the vehicle is in REVERSE, the driver is alerted using both the visual and audible alarms, including reducing the radio volume.

WARNING!

Rear Cross Path Detection (RCP) is not a back up aid system. It is intended to be used to help a driver detect an oncoming vehicle in a parking lot situation. Drivers must be careful when backing up, even when using RCP. Always check carefully behind your vehicle, look behind you, and be sure to check for pedestrians, animals, other vehicles, obstructions, and blind spots before backing up. Failure to do so can result in serious injury or death.

Modes Of Operation

Three selectable modes of operation are available in the Uconnect System. Refer to "Uconnect Settings" in "Multimedia" for further information.

Blind Spot Alert Lights Only

When operating in Blind Spot Alert mode, the BSM system will provide a visual alert in the appropriate side view mirror based on a detected object. However, when the system is operating in Rear Cross Path (RCP) mode, the system will respond with both visual and audible alerts when a detected object is present. Whenever an audible alert is requested, the radio is muted.

Blind Spot Alert Lights/Chime

When operating in Blind Spot Alert Lights/Chime mode, the BSM system will provide a visual alert in the appropriate side view mirror based on a detected object. If the turn signal is then activated, and it corresponds to an alert present on that side of the vehicle, an audible chime will also be sounded. Whenever a turn signal and detected object are present on the same side at the same time, both the visual and audible alerts will be issued. In addition to the audible alert the radio (if on) will also be muted.

NOTE: Whenever an audible alert is requested by the BSM system, the radio is also muted.

When the system is in RCP, the system shall respond with both visual and audible alerts when a detected object is present. Whenever an audible alert is requested, the radio is also muted. Turn/hazard signal status is ignored; the RCP state always requests the chime.

Blind Spot Alert Off

When the BSM system is turned off there will be no visual or audible alerts from either the BSM or RCP systems.

NOTE: The BSM system will store the current operating mode when the vehicle is shut off. Each time the vehicle is started the previously stored mode will be recalled and used.

General Information

This vehicle has systems that operate on radio frequency that comply with Part 15 of the Federal Communications Commission (FCC) rules and with Industry Canada Standards RSS- GEN/210/220/310.

Operation is subject to the following two conditions:

1. The device may not cause harmful interference.
2. The device must accept any interference received, including interference that may cause undesired operation of the device.

Changes or modifications to any of these systems by other than an authorized service facility could void authorization to use this equipment.

Forward Collision Warning (FCW) With Mitigation — If Equipped

Forward Collision Warning (FCW) With Mitigation Operation

The Forward Collision Warning (FCW) system with mitigation provides the driver with audible warnings, visual warnings (within the instrument cluster display), and may apply a brake jerk to warn the driver when it detects a potential frontal collision. The warnings and limited braking are intended to provide the driver with enough time to react, avoid or mitigate the potential collision.

NOTE: FCW monitors the information from the forward looking sensors as well as the Electronic Brake Controller (EBC), to calculate the probability of a forward collision. When the system determines that a forward collision is probable, the driver will be provided with audible and visual warnings and may provide a brake jerk warning.

If the driver does not take action based upon these progressive warnings, then the system will provide a limited level of active braking to help slow the vehicle and mitigate the potential forward collision. If the driver reacts to the warnings by braking and the system determines that the driver intends to avoid the collision by braking but has not applied sufficient brake force, the system will compensate and provide additional brake force as required.

If a Forward Collision Warning with Mitigation event begins at a speed below 26 mph (42 km/h), the system may provide the maximum braking possible to mitigate the potential forward collision. If the Forward Collision Warning with Mitigation event stops the vehicle completely, the system will hold the vehicle at standstill for two seconds and then release the brakes.

FCW Message

When the system determines a collision with the vehicle in front of you is no longer probable, the warning message will be deactivated.

NOTE:

- The minimum speed for FCW activation is 1 mph (2 km/h).
- The FCW alerts may be triggered on objects other than vehicles such as guard rails or sign posts based on the course prediction. This is expected and is a part of normal FCW activation and functionality.
- It is unsafe to test the FCW system. To prevent such misuse of the system, after four Active Braking events within a key cycle, the Active Braking portion of FCW will be deactivated until the next key cycle.
- The FCW system is intended for on-road use only. If the vehicle is taken off-road, the FCW system should be deactivated to prevent unnecessary warnings to the surroundings.

WARNING!

Forward Collision Warning (FCW) is not intended to avoid a collision on its own, nor can FCW detect every type of potential collision. The driver has the responsibility to avoid a collision by controlling the vehicle via braking and steering. Failure to follow this warning could lead to serious injury or death.

Turning FCW On Or Off

NOTE: The default status of FCW is “on”, this allows the system to warn you of a possible collision with the vehicle in front of you.

The forward collision button is located on the switch panel below the Uconnect display.

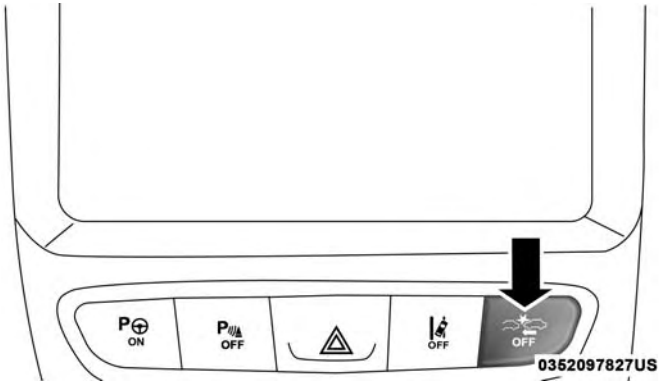

Forward Collision Button

To turn the FCW system off, push the forward collision button once (LED turns on).

To turn the FCW system back on, push the forward collision button again (LED turns off).

- Changing the FCW status to "off" prevents the system from warning you of a possible collision with the vehicle in front of you.
- Changing the FCW sensitivity - Near vs. Far. Far warns the driver of a possible collision earlier and Near warns the driver later.
- Changing the Active Braking status to "off" prevents the system from providing limited active braking, or additional brake support if the driver is not braking adequately in the event of a potential frontal collision, but maintains the audible and visual warnings.

NOTE: The FCW system state is kept in memory from one key cycle to the next. If the system is turned off, it will remain off when the vehicle is restarted.

Changing FCW And Active Braking Status

The FCW Sensitivity And Active Braking Settings are programmable through the Uconnect System. Refer to "Uconnect Settings" in "Multimedia" for further information.

The default status of FCW is the "Far" setting and the Active Braking is the "On" setting, this allows the system to warn you of a possible collision with the vehicle in front of you when you are farther away and it applies limited braking. This gives you the most reaction time to avoid a possible collision.

Changing the FCW status to the "Near" setting, allows the system to warn you of a possible collision with the vehicle in front of you when you are much closer. This setting provides less reaction time than the "Far" setting, which allows for a more dynamic driving experience.

NOTE:

- The system will retain the last setting selected by the driver after ignition shut down.
- FCW may not react to irrelevant objects such as overhead objects, ground reflections, objects not in the path of the vehicle, stationary objects that are far away, oncoming traffic, or leading vehicles with the same or higher rate of speed.
- FCW will be disabled like ACC, with the unavailable screens.

FCW Limited Warning

If the instrument cluster display reads "ACC/FCW Limited Functionality" or "ACC/FCW Limited Functionality Clean Front Windshield" momentarily, there may be a condition that limits FCW functionality. Although the vehicle is still drivable under normal conditions, the active braking may not be fully available. Once the condition that limited the system performance is no longer present, the system will return to its full performance state. If the problem persists, see your authorized dealer.

Service FCW Warning

If the system turns off, and the instrument cluster display reads:

- ACC/FCW Unavailable Service Required
- Cruise/FCW Unavailable Service Required

This indicates there is an internal system fault. Although the vehicle is still drivable under normal conditions, have the system checked by an authorized dealer.

Tire Pressure Monitor System (TPMS)

The Tire Pressure Monitor System (TPMS) will warn the driver of a low tire pressure based on the vehicle recommended cold placard pressure.

The tire pressure will vary with temperature by approximately 1 psi (7 kPa) for every 12°F (6.5°C). This means that when the outside temperature decreases, the tire pressure will decrease. Tire pressure should always be set based on cold inflation tire pressure. This is defined as the tire pressure after the vehicle has not been driven for at least three hours, or driven less than 1 mile (1.6 km) after a three hour period. The cold tire inflation pressure must not

exceed the maximum inflation pressure molded into the tire sidewall. Refer to “Tires” in “Servicing And Maintenance” for information on how to properly inflate the vehicle’s tires. The tire pressure will also increase as the vehicle is driven. This is normal and there should be no adjustment for this increased pressure.

The TPMS will warn the driver of a low tire pressure if the tire pressure falls below the low-pressure warning limit for any reason, including low temperature effects and natural pressure loss through the tire.

The TPMS will continue to warn the driver of low tire pressure as long as the condition exists, and will not turn off until the tire pressure is at or above the recommended cold placard pressure. Once the low tire pressure warning (Tire Pressure Monitoring Telltale Light) illuminates, you must increase the tire pressure to the recommended cold placard pressure in order for the “Tire Pressure Monitoring Telltale Light” to turn off.

NOTE: When filling warm tires, the tire pressure may need to be increased up to an additional 4 psi (30 kPa) above the recommended cold placard pressure in order to turn the Tire Pressure Monitoring Telltale Light off.

The system will automatically update and the “Tire Pressure Monitoring Telltale Light” will turn off once the system receives the updated tire pressures. The vehicle may need to be driven for up to 20 minutes above 15.5 mph (25 km/h) in order for the TPMS to receive this information.

For example, your vehicle may have a recommended cold (parked for more than three hours) placard pressure of 33 psi (227 kPa). If the ambient temperature is 68°F (20°C) and the measured tire pressure is 28 psi (193 kPa), a temperature drop to 20°F (-7°C) will decrease the tire pressure to approximately 24 psi (165 kPa). This tire pressure is low enough to turn ON the “Tire Pressure Monitoring Telltale Light.” Driving the vehicle may cause the tire pressure to rise to approximately 28 psi (193 kPa), but the “Tire Pressure Monitoring Telltale Light” will still be on. In this situation, the “Tire Pressure Monitoring Telltale Light” will turn off only after the tires are inflated to the vehicle’s recommended cold placard pressure value.

NOTE: When filling warm tires, the tire pressure may need to be increased up to an additional 4 psi (30 kPa) above the recommended cold placard pressure in order to turn the Tire Pressure Monitoring Telltale Light off.

CAUTION!

- **The TPMS has been optimized for the original equipment tires and wheels. TPMS pressures and warning have been established for the tire size equipped on your vehicle. Undesirable system operation or sensor damage may result when using replacement equipment that is not of the same size, type, and/or style. The TPM sensor is not designed for use on aftermarket wheels, and may contribute to a poor overall system performance. Customers are encouraged to use OEM wheels to assure TPMS feature operation.**
- **Using aftermarket tire sealants may cause the Tire Pressure Monitoring System (TPMS) sensor to become inoperable. After using an aftermarket tire sealant it is recommended that you take your vehicle to an authorized dealer to have your sensor function checked.**
- **After inspecting or adjusting the tire pressure always reinstall the valve stem cap. This will prevent moisture and dirt from entering the valve stem, which could damage the TPMS sensor.**

NOTE:

- The TPMS is not intended to replace normal tire care and maintenance, or to provide warning of a tire failure or condition.
- The TPMS should not be used as a tire pressure gauge while adjusting your tire pressure.
- Driving on a significantly underinflated tire causes the tire to overheat and can lead to tire failure. Underinflation also reduces fuel efficiency and tire tread life, and may affect the vehicle's handling and stopping ability.
- The TPMS is not a substitute for proper tire maintenance, and it is the driver's responsibility to maintain correct tire pressure using an accurate tire pressure gauge, even if underinflation has not reached the level to trigger illumination of the "Tire Pressure Monitoring Telltale Light".
- Seasonal temperature changes will affect tire pressure, and the TPMS will monitor the actual tire pressure in the tire.

Premium System

The Tire Pressure Monitor System (TPMS) uses wireless technology with wheel rim mounted electronic sensors to

monitor tire pressure levels. Sensors, mounted to each wheel as part of the valve stem, transmit tire pressure readings to the receiver module.

NOTE: It is particularly important for you to check the tire pressure in all of the tires on your vehicle monthly and to maintain the proper pressure.

The TPMS consists of the following components:

- Receiver module
- Four tire pressure monitoring sensors
- Various tire pressure monitoring system messages, which display in the instrument cluster
- Tire pressure monitoring telltale light

Tire Pressure Monitoring Low Pressure Warnings

The "Tire Pressure Monitoring Telltale Light" will illuminate in the instrument cluster and a chime will sound when tire pressure is low in one or more of the four active road tires. In addition, the instrument cluster will display a "Tire Low" message for a minimum of five seconds, an "Inflate to XX" message and a graphic showing the pressure values of each tire with the low tire pressure values in a different color.

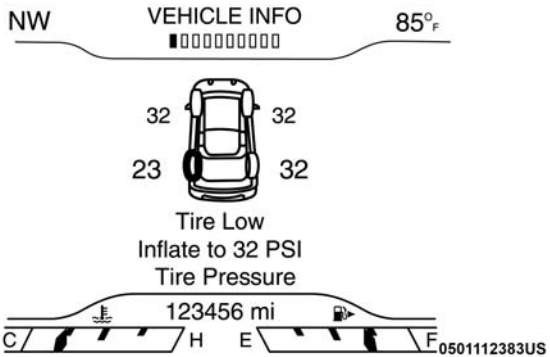

Tire Pressure Monitoring Low Pressure Warning

Should this occur, you should stop as soon as possible and inflate the tires with low pressure (those in a different color in the instrument cluster graphic) to the vehicle's recommended cold placard pressure value as shown in the "Inflate to XX" message. Once the system receives the updated tire pressures, the system will automatically update, the pressure values in the graphic display in the instrument cluster will return to their original color, and the "Tire Pressure Monitoring Telltale Light" will turn off.

NOTE: When filling warm tires, the tire pressure may need to be increased up to an additional 4 psi (30 kPa) above the recommended cold placard pressure in order to turn the Tire Pressure Monitoring Telltale Light off.
The vehicle may need to be driven for up to 20 minutes above 15.5 mph (25 km/h) in order for the TPMS to receive this information.

Service TPMS Warning

When a system fault is detected, the "Tire Pressure Monitoring Telltale Light" will flash on and off for 75 seconds and then remain on solid. The system fault will also sound a chime. In addition, the instrument cluster will display a "SERVICE TPM SYSTEM" message for a minimum of five seconds and then display dashes (- -) in place of the pressure value to indicate which sensor is not being received.

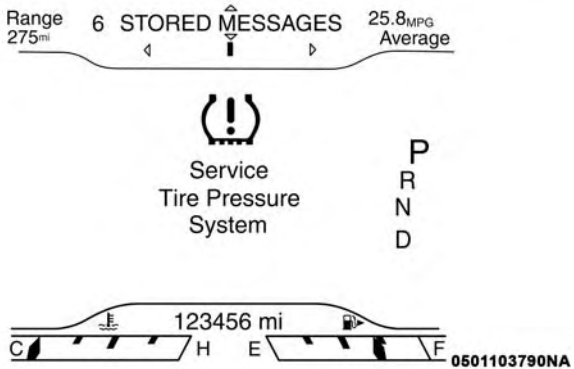

Tire Pressure Monitoring Service Warning

If the ignition key is cycled, this sequence will repeat, providing the system fault still exists. If the system fault no longer exists, the "Tire Pressure Monitoring Telltale Light" will no longer flash, and the "SERVICE TPM SYSTEM" message will no longer display, and a pressure value will display in place of the dashes. A system fault can occur due to any of the following:

- Jamming due to electronic devices or driving next to facilities emitting the same radio frequencies as the TPMS sensors.

- Installing some form of aftermarket window tinting that affects radio wave signals.
- Lots of snow or ice around the wheels or wheel housings.
- Using tire chains on the vehicle.
- Using wheels/tires not equipped with TPMS sensors.

Vehicles With Compact Spare or Non-Matching Full Size Spare

1. The compact spare tire or non-matching full size does not have a tire pressure monitoring sensor. Therefore, the TPMS will not monitor the pressure in the compact spare tire.
2. If you install the compact or non-matching full size spare tire in place of a road tire that has a pressure below the low-pressure warning limit, upon the next ignition key cycle, the "TPMS Telltale Light" will remain on and a chime will sound. In addition, the graphic in the instrument cluster will still display a different color pressure value and an "Inflate to XX" message.
3. After driving the vehicle for up to 20 minutes above 15.5 mph (25 km/h), the "TPMS Telltale Light" will flash on and off for 75 seconds and then remain on solid. In addition, the instrument cluster will display a "Service Tire Pressure System" message for five seconds and then display dashes (- -) in place of the pressure value.
4. For each subsequent ignition key cycle, a chime will sound, the "TPMS Telltale Light" will flash on and off for 75 seconds and then remain on solid, and the instrument cluster will display a "SERVICE TPM SYSTEM" message for five seconds and then display dashes (- -) in place of the pressure value.
5. Once you repair or replace the original road tire and reinstall it on the vehicle in place of the compact spare or non-matching full size, the TPMS will update automatically. In addition, the "TPMS Telltale Light" will turn off and the graphic in the instrument cluster will display a new pressure value instead of dashes (- -), as long as no tire pressure is below the low-pressure warning limit in any of the four active road tires. The vehicle may need to be driven for up to 20 minutes above 15.5 mph (25 km/h) in order for the TPMS to receive this information.

TPMS Deactivation — If Equipped

The TPMS can be deactivated if replacing all four wheel and tire assemblies (road tires) with wheel and tire assemblies that do not have TPMS Sensors, such as when installing winter wheel and tire assemblies on your vehicle.

To deactivate the TPMS, first replace all four wheel and tire assemblies (road tires) with tires not equipped with Tire Pressure Monitoring (TPM) Sensors. Then, drive the vehicle for 20 minutes above 15.5 mph (25 km/h). The TPMS will chime, the "TPM Telltale Light" will flash on and off for 75 seconds and then remain on. The instrument cluster will display the "SERVICE TPM SYSTEM" message and then display dashes (--) in place of the pressure values.

Beginning with the next ignition cycle, the TPMS will no longer chime or display the "SERVICE TPM SYSTEM" message in the instrument cluster but dashes (--) will remain in place of the pressure values.

To reactivate the TPMS, replace all four wheel and tire assemblies (road tires) with tires equipped with TPM sensors. Then, drive the vehicle for up to 20 minutes above 15.5 mph (25 km/h). The TPMS will chime, the "TPM Telltale Light" will flash on and off for 75 seconds and then turn off. The instrument cluster will display the "SERVICE TPM SYSTEM" message and then display pressure values in place of the dashes. On the next ignition cycle the "SERVICE TPM SYSTEM" message will no longer be displayed as long as no system fault exists.

General Information

The following regulatory statement applies to all radio frequency (RF) devices equipped in this vehicle:

This device complies with Part 15 of the FCC Rules and with Industry Canada license-exempt RSS standard(s). Operation is subject to the following two conditions:

(1) This device may not cause harmful interference, and

(2) This device must accept any interference received, including interference that may cause undesired operation.

NOTE: Changes or modifications not expressly approved by the party responsible for compliance could void the user's authority to operate the equipment.

OCCUPANT RESTRAINT SYSTEMS

Some of the most important safety features in your vehicle are the restraint systems:

Occupant Restraint Systems Features

- Seat Belt Systems
- Supplemental Restraint Systems (SRS) Air Bags
- Child Restraints

Some of the safety features described in this section may be standard equipment on some models, or may be optional equipment on others. If you are not sure, ask your authorized dealer.

Important Safety Precautions

Please pay close attention to the information in this section. It tells you how to use your restraint system properly, to keep you and your passengers as safe as possible.

Here are some simple steps you can take to minimize the risk of harm from a deploying air bag:

1. Children 12 years old and under should always ride buckled up in a vehicle with a rear seat.
2. If a child from 2 to 12 years old (not in a rear-facing child restraint) must ride in the front passenger seat, move the seat as far back as possible and use the proper child restraint (refer to "Child Restraints" in this section for further information).
3. Children that are not big enough to wear the vehicle seat belt properly (refer to "Child Restraints" in this section for further information) should be secured in a vehicle with a rear seat in child restraints or belt-positioning booster seats. Older children who do not use child restraints or belt-positioning booster seats should ride properly buckled up in a vehicle with a rear seat.
4. Never allow children to slide the shoulder belt behind them or under their arm.
5. You should read the instructions provided with your child restraint to make sure that you are using it properly.
6. All occupants should always wear their lap and shoulder belts properly.
7. The driver and front passenger seats should be moved back as far as practical to allow the front air bags room to inflate.
8. Do not lean against the door or window. If your vehicle has side air bags, and deployment occurs, the side air bags will inflate forcefully into the space between occupants and the door and occupants could be injured.

9. If the air bag system in this vehicle needs to be modified to accommodate a disabled person, refer to the "Customer Assistance" section for customer service contact information.

WARNING!

- **Never place a rear-facing child restraint in front of an air bag. A deploying passenger front air bag can cause death or serious injury to a child 12 years or younger, including a child in a rear-facing child restraint.**
- **Only use a rear-facing child restraint in a vehicle with a rear seat.**

Seat Belt Systems

Buckle up even though you are an excellent driver, even on short trips. Someone on the road may be a poor driver and could cause a collision that includes you. This can happen far away from home or on your own street.

Research has shown that seat belts save lives, and they can reduce the seriousness of injuries in a collision. Some of the worst injuries happen when people are thrown from the vehicle. Seat belts reduce the possibility of ejection and the risk of injury caused by striking the inside of the vehicle. Everyone in a motor vehicle should be belted at all times.

Enhanced Seat Belt Use Reminder System (BeltAlert)

Driver And Passenger BeltAlert — If Equipped

BeltAlert is a feature intended to remind the driver and outboard front seat passenger (if equipped with outboard front passenger seat BeltAlert) to buckle their seat belts. The Belt Alert feature is active whenever the ignition switch is in the START or ON/RUN position.

Initial Indication

If the driver is unbuckled when the ignition switch is first in the START or ON/RUN position, a chime will signal for a few seconds. If the driver or outboard front seat passenger (if equipped with outboard front passenger seat BeltAlert) is unbuckled when the ignition switch is first in the START or ON/RUN position the Seat Belt Reminder Light will turn on and remain on until both outboard front seat belts are buckled. The outboard front passenger seat BeltAlert is not active when an outboard front passenger seat is unoccupied.

BeltAlert Warning Sequence

The BeltAlert warning sequence is activated when the vehicle is moving above a specified vehicle speed range and the driver or outboard front seat passenger is unbuckled (if equipped with outboard front passenger seat BeltAlert) (the outboard front passenger seat BeltAlert is not active when the outboard front passenger seat is unoccupied). The BeltAlert warning sequence starts by blinking the Seat Belt Reminder Light and sounding an intermittent chime. Once the BeltAlert warning sequence has completed, the Seat Belt Reminder Light will remain on until the seat belts are buckled. The BeltAlert warning sequence may repeat based on vehicle speed until the driver and occupied outboard front seat passenger seat belts are buckled. The driver should instruct all occupants to buckle their seat belts.

Change Of Status

If the driver or outboard front seat passenger (if equipped with outboard front passenger seat BeltAlert) unbuckles their seat belt while the vehicle is traveling, the BeltAlert warning sequence will begin until the seat belts are buckled again.

The outboard front passenger seat BeltAlert is not active when the outboard front passenger seat is unoccupied. BeltAlert may be triggered when an animal or other items are placed on the outboard front passenger seat or when the seat is folded flat (if equipped). It is recommended that pets be restrained in the rear seat (if equipped) in pet harnesses or pet carriers that are secured by seat belts, and cargo is properly stowed.

BeltAlert can be activated or deactivated by your authorized dealer. FCA US LLC does not recommend deactivating BeltAlert.

NOTE: If BeltAlert has been deactivated and the driver or outboard front seat passenger (if equipped with outboard front passenger seat BeltAlert) is unbuckled the Seat Belt Reminder Light will turn on and remain on until the driver and outboard front seat passenger seat belts are buckled.

Lap/Shoulder Belts

All seating positions in your vehicle are equipped with lap/shoulder belts.

The seat belt webbing retractor will lock only during very sudden stops or collisions. This feature allows the shoulder part of the seat belt to move freely with you under normal conditions. However, in a collision the seat belt will lock

and reduce your risk of striking the inside of the vehicle or being thrown out of the vehicle.

WARNING!

- **Relying on the air bags alone could lead to more severe injuries in a collision. The air bags work with your seat belt to restrain you properly. In some collisions, the air bags won't deploy at all. Always wear your seat belt even though you have air bags.**
- **In a collision, you and your passengers can suffer much greater injuries if you are not properly buckled up. You can strike the interior of your vehicle or other passengers, or you can be thrown out of the vehicle. Always be sure you and others in your vehicle are buckled up properly.**
- **It is dangerous to ride in a cargo area, inside or outside of a vehicle. In a collision, people riding in these areas are more likely to be seriously injured or killed.**
- **Do not allow people to ride in any area of your vehicle that is not equipped with seats and seat belts.**
- **Be sure everyone in your vehicle is in a seat and using a seat belt properly. Occupants, including the**

(Continued)

WARNING! ***(Continued)***

driver, should always wear their seat belts whether or not an air bag is also provided at their seating position to minimize the risk of severe injury or death in the event of a crash.
- **Wearing your seat belt incorrectly could make your injuries in a collision much worse. You might suffer internal injuries, or you could even slide out of the seat belt. Follow these instructions to wear your seat belt safely and to keep your passengers safe, too.**
- **Two people should never be belted into a single seat belt. People belted together can crash into one another in a collision, hurting one another badly. Never use a lap/shoulder belt or a lap belt for more than one person, no matter what their size.**

WARNING!

- **A lap belt worn too high can increase the risk of injury in a collision. The seat belt forces won't be at the strong hip and pelvic bones, but across your abdomen. Always wear the lap part of your seat belt as low as possible and keep it snug.**

(Continued)

WARNING! ***(Continued)***

- **A twisted seat belt may not protect you properly. In a collision, it could even cut into you. Be sure the seat belt is flat against your body, without twists. If you can't straighten a seat belt in your vehicle, take it to your authorized dealer immediately and have it fixed.**
- **A seat belt that is buckled into the wrong buckle will not protect you properly. The lap portion could ride too high on your body, possibly causing internal injuries. Always buckle your seat belt into the buckle nearest you.**
- **A seat belt that is too loose will not protect you properly. In a sudden stop, you could move too far forward, increasing the possibility of injury. Wear your seat belt snugly.**
- **A seat belt that is worn under your arm is dangerous. Your body could strike the inside surfaces of the vehicle in a collision, increasing head and neck injury. A seat belt worn under the arm can cause internal injuries. Ribs aren't as strong as shoulder bones. Wear the seat belt over your shoulder so that your strongest bones will take the force in a collision.**

(Continued)

WARNING! ***(Continued)***

- **A shoulder belt placed behind you will not protect you from injury during a collision. You are more likely to hit your head in a collision if you do not wear your shoulder belt. The lap and shoulder belt are meant to be used together.**
- **A frayed or torn seat belt could rip apart in a collision and leave you with no protection. Inspect the seat belt system periodically, checking for cuts, frays, or loose parts. Damaged parts must be replaced immediately. Do not disassemble or modify the seat belt system. Seat belt assemblies must be replaced after a collision.**

Lap/Shoulder Belt Operating Instructions

1. Enter the vehicle and close the door. Sit back and adjust the seat.
2. The seat belt latch plate is above the back of the front seat, and next to your arm in the rear seat (for vehicles equipped with a rear seat). Grasp the latch plate and pull out the seat belt. Slide the latch plate up the webbing as far as necessary to allow the seat belt to go around your lap.

Pulling Out The Latch Plate

3. When the seat belt is long enough to fit, insert the latch plate into the buckle until you hear a “click.”

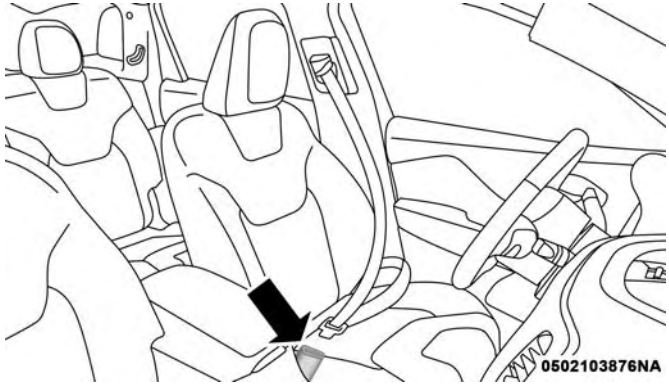

Inserting Latch Plate Into Buckle

4. Position the lap belt so that it is snug and lies low across your hips, below your abdomen. To remove slack in the lap belt portion, pull up on the shoulder belt. To loosen the lap belt if it is too tight, tilt the latch plate and pull on the lap belt. A snug seat belt reduces the risk of sliding under the seat belt in a collision.

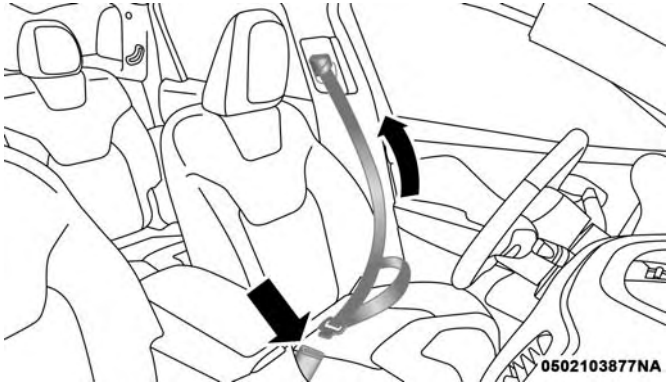

Positioning The Lap Belt

5. Position the shoulder belt across the shoulder and chest with minimal, if any slack so that it is comfortable and not resting on your neck. The retractor will withdraw any slack in the shoulder belt.

6. To release the seat belt, push the red button on the buckle. The seat belt will automatically retract to its stowed position. If necessary, slide the latch plate down the webbing to allow the seat belt to retract fully.

Lap/Shoulder Belt Untwisting Procedure

Use the following procedure to untwist a twisted lap/shoulder belt.

1. Position the latch plate as close as possible to the anchor point.

2. At about 6 to 12 inches (15 to 30 cm) above the latch plate, grasp and twist the seat belt webbing 180 degrees to create a fold that begins immediately above the latch plate.

3. Slide the latch plate upward over the folded webbing. The folded webbing must enter the slot at the top of the latch plate.

4. Continue to slide the latch plate up until it clears the folded webbing and the seat belt is no longer twisted.

Adjustable Upper Shoulder Belt Anchorage

In the driver and front passenger seats, the top of the shoulder belt can be adjusted upward or downward to position the seat belt away from your neck. Push or squeeze the anchorage button to release the anchorage, and move it up or down to the position that serves you best.

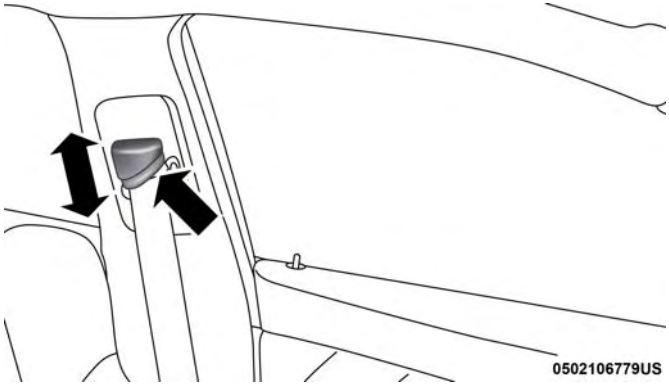

Adjustable Anchorage

As a guide, if you are shorter than average, you will prefer the shoulder belt anchorage in a lower position, and if you are taller than average, you will prefer the shoulder belt anchorage in a higher position. After you release the anchorage button, try to move it up or down to make sure that it is locked in position.

NOTE: The adjustable upper shoulder belt anchorage is equipped with an Easy Up feature. This feature allows the shoulder belt anchorage to be adjusted in the upward position without pushing or squeezing the release button. To verify the shoulder belt anchorage is latched, pull downward on the shoulder belt anchorage until it is locked into position.

WARNING!

- **Wearing your seat belt incorrectly could make your injuries in a collision much worse. You might suffer internal injuries, or you could even slide out of the seat belt. Follow these instructions to wear your seat belt safely and to keep your passengers safe, too.**
- **Position the shoulder belt across the shoulder and chest with minimal, if any slack so that it is comfortable and not resting on your neck. The retractor will withdraw any slack in the shoulder belt.**
- **Misadjustment of the seat belt could reduce the effectiveness of the safety belt in a crash.**

Seat Belt Extender

If a seat belt is not long enough to fit properly, even when the webbing is fully extended and the adjustable upper shoulder belt anchorage (if equipped) is in its lowest position, your authorized dealer can provide you with a Seat Belt Extender. The Seat Belt Extender should be used only if the existing seat belt is not long enough. When the Seat Belt Extender is not required for a different occupant, it must be removed.

WARNING!

- **ONLY use a Seat Belt Extender if it is physically required in order to properly fit the original seat belt system. DO NOT USE the Seat Belt Extender if, when worn, the distance between the front edge of the Seat Belt Extender buckle and the center of the occupant's body is LESS than 6 inches.**
- **Using a Seat Belt Extender when not needed can increase the risk of serious injury or death in a collision. Only use the Seat Belt Extender when the lap belt is not long enough and only use in the recommended seating positions. Remove and store the Seat Belt Extender when not needed.**

Seat Belts And Pregnant Women

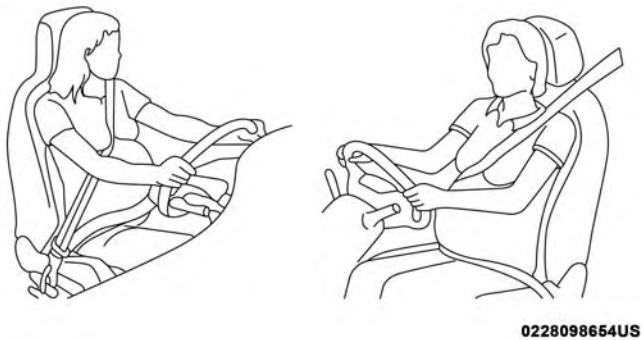

Pregnant Women And Seat Belts

Seat belts must be worn by all occupants including pregnant women: the risk of injury in the event of an accident is reduced for the mother and the unborn child if they are wearing a seat belt.

Position the lap belt snug and low below the abdomen and across the strong bones of the hips. Place the shoulder belt across the chest and away from the neck. Never place the shoulder belt behind the back or under the arm.

Seat Belt Pretensioner

The front seat belt system is equipped with pretensioning devices that are designed to remove slack from the seat belt in the event of a collision. These devices may improve the performance of the seat belt by removing slack from the seat belt early in a collision. Pretensioners work for all size occupants, including those in child restraints.

NOTE: These devices are not a substitute for proper seat belt placement by the occupant. The seat belt still must be worn snugly and positioned properly.

The pretensioners are triggered by the Occupant Restraint Controller (ORC). Like the air bags, the pretensioners are single use items. A deployed pretensioner or a deployed air bag must be replaced immediately.

Energy Management Feature

The front seat belt system is equipped with an Energy Management feature that may help further reduce the risk of injury in the event of a collision. The seat belt system has a retractor assembly that is designed to release webbing in a controlled manner.

Switchable Automatic Locking Retractor (ALR)

The seat belts in the passenger seating positions are equipped with a Switchable Automatic Locking Retractor (ALR) which is used to secure a child restraint system. For additional information, refer to “Installing Child Restraints Using The Vehicle Seat Belt” under the “Child Restraints” section of this manual. The figure below illustrates the locking feature for each seating position.

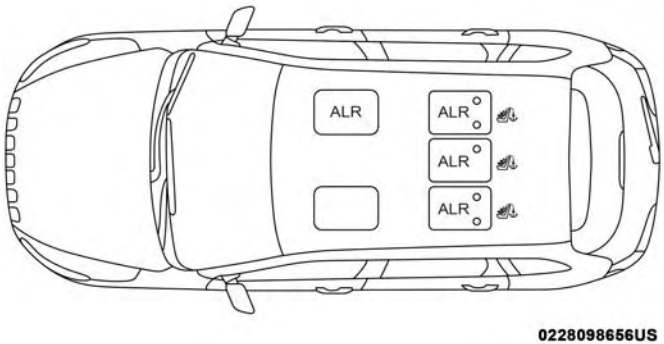

ALR — Switchable Automatic Locking Retractor

If the passenger seating position is equipped with an ALR and is being used for normal usage, only pull the seat belt webbing out far enough to comfortably wrap around the occupant's mid-section so as to not activate the ALR. If the ALR is activated, you will hear a clicking sound as the seat belt retracts. Allow the webbing to retract completely in this case and then carefully pull out only the amount of webbing necessary to comfortably wrap around the occupant's mid-section. Slide the latch plate into the buckle until you hear a "click."

In Automatic Locking Mode, the shoulder belt is automatically pre-locked. The seat belt will still retract to remove any slack in the shoulder belt. Use the Automatic Locking Mode anytime a child restraint is installed in a seating position that has a seat belt with this feature. Children 12 years old and under should always be properly restrained in a vehicle with a rear seat.

WARNING!

- **Never place a rear-facing child restraint in front of an air bag. A deploying passenger front air bag can cause death or serious injury to a child 12 years or younger, including a child in a rear-facing child restraint.**
- **Only use a rear-facing child restraint in a vehicle with a rear seat.**

How To Engage The Automatic Locking Mode

1. Buckle the combination lap and shoulder belt.
2. Grasp the shoulder portion and pull downward until the entire seat belt is extracted.
3. Allow the seat belt to retract. As the seat belt retracts, you will hear a clicking sound. This indicates the seat belt is now in the Automatic Locking Mode.

How To Disengage The Automatic Locking Mode

Unbuckle the combination lap/shoulder belt and allow it to retract completely to disengage the Automatic Locking Mode and activate the vehicle sensitive (emergency) locking mode.

WARNING!

- **The seat belt assembly must be replaced if the switchable Automatic Locking Retractor (ALR) feature or any other seat belt function is not working properly when checked according to the procedures in the Service Manual.**
- **Failure to replace the seat belt assembly could increase the risk of injury in collisions.**
- **Do not use the Automatic Locking Mode to restrain occupants who are wearing the seat belt or children who are using booster seats. The locked mode is only used to install rear-facing or forward-facing child restraints that have a harness for restraining the child.**

Supplemental Restraint Systems (SRS)

Some of the safety features described in this section may be standard equipment on some models, or may be optional equipment on others. If you are not sure, ask your authorized dealer.

The air bag system must be ready to protect you in a collision. The Occupant Restraint Controller (ORC) monitors the internal circuits and interconnecting wiring associated with the electrical Air Bag System Components. Your vehicle may be equipped with the following Air Bag System Components:

Air Bag System Components

- Occupant Restraint Controller (ORC)
- Air Bag Warning Light
- Steering Wheel and Column
- Instrument Panel
- Knee Impact Bolsters
- Driver and Front Passenger Air Bags
- Supplemental Side Air Bags
- Supplemental Knee Air Bags
- Front and Side Impact Sensors
- Seat Belt Pretensioners
- Seat Track Position Sensors
- Seat Belt Buckle Switch
- Occupant Classification System

Air Bag Warning Light

The ORC monitors the readiness of the electronic parts of the air bag system whenever the ignition switch is in the START or ON/RUN position. If the ignition switch is in the OFF position or in the ACC position, the air bag system is not on and the air bags will not inflate.

The ORC contains a backup power supply system that may deploy the air bag system even if the battery loses power or it becomes disconnected prior to deployment.

The ORC turns on the Air Bag Warning Light in the instrument panel for approximately four to eight seconds for a self-check when the ignition switch is first in the ON/RUN position. After the self-check, the Air Bag Warning Light will turn off. If the ORC detects a malfunction in any part of the system, it turns on the Air Bag Warning Light, either momentarily or continuously. A single chime will sound to alert you if the light comes on again after initial startup.

The ORC also includes diagnostics that will illuminate the instrument panel Air Bag Warning Light if a malfunction is detected that could affect the air bag system. The diagnostics also record the nature of the malfunction. While the air bag system is designed to be maintenance free, if any of the following occurs, have an authorized dealer service the air bag system immediately.

- The Air Bag Warning Light does not come on during the four to eight seconds when the ignition switch is first in the ON/RUN position.
- The Air Bag Warning Light remains on after the four to eight-second interval.
- The Air Bag Warning Light comes on intermittently or remains on while driving.

NOTE: If the speedometer, tachometer, or any engine related gauges are not working, the Occupant Restraint Controller (ORC) may also be disabled. In this condition the air bags may not be ready to inflate for your protection. Have an authorized dealer service the air bag system immediately.

WARNING!

Ignoring the Air Bag Warning Light in your instrument panel could mean you won't have the air bag system to protect you in a collision. If the light does not come on as a bulb check when the ignition is first turned on,

(Continued)

WARNING! *(Continued)*

stays on after you start the vehicle, or if it comes on as you drive, have an authorized dealer service the air bag system immediately.

Redundant Air Bag Warning Light

If a fault with the Air Bag Warning Light is detected, which could affect the Supplemental Restraint System (SRS), the Redundant Air Bag Warning Light will illuminate on the instrument panel. The Redundant Air Bag Warning Light will stay on until the fault is cleared. In addition, a single chime will sound to alert you that the Redundant Air Bag Warning Light has come on and a fault has been detected. If the Redundant Air Bag Warning Light comes on intermittently or remains on while driving have an authorized dealer service the vehicle immediately. For additional information regarding the Redundant Air Bag Warning Light, refer to "Warning/Indicator Lights And Messages" in "Getting To Know Your Instrument Panel" section of this manual.

Front Air Bags

This vehicle has front air bags and lap/shoulder belts for both the driver and front passenger. The front air bags are a supplement to the seat belt restraint systems. The driver front air bag is mounted in the center of the steering wheel. The passenger front air bag is mounted in the instrument panel, above the glove compartment. The words "SRS AIRBAG" or "AIRBAG" are embossed on the air bag covers.

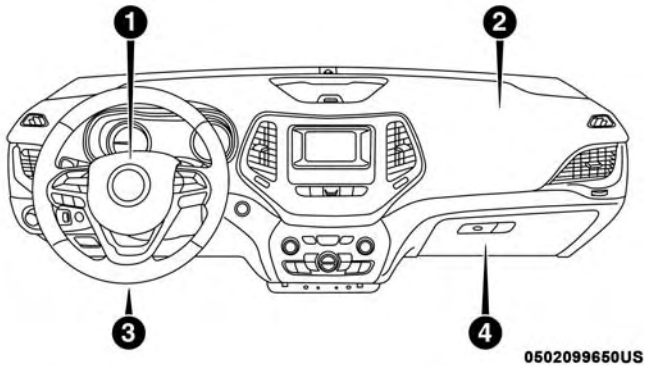

Front Air Bag/Knee Impact Bolster Locations

1 — Driver Front Air Bag
2 — Passenger Front Air Bag
3 — Supplemental Driver Knee Air Bag/Driver Knee Impact Bolster
4 — Supplemental Passenger Knee Air Bag/Passenger Knee Impact Bolster

WARNING!

- **Being too close to the steering wheel or instrument panel during front air bag deployment could cause serious injury, including death. Air bags need room to inflate. Sit back, comfortably extending your arms to reach the steering wheel or instrument panel.**
- **Never place a rear-facing child restraint in front of an air bag. A deploying passenger front air bag can cause death or serious injury to a child 12 years or younger, including a child in a rear-facing child restraint.**
- **Only use a rear-facing child restraint in a vehicle with a rear seat.**

Driver And Passenger Front Air Bag Features

The Advanced Front Air Bag system has multistage driver and front passenger air bags. This system provides output appropriate to the severity and type of collision as determined by the Occupant Restraint Controller (ORC), which may receive information from the front impact sensors (if equipped) or other system components.

The first stage inflator is triggered immediately during an impact that requires air bag deployment. A low energy output is used in less severe collisions. A higher energy output is used for more severe collisions.

This vehicle may be equipped with a driver and/or front passenger seat belt buckle switch that detects whether the driver or front passenger seat belt is buckled. The seat belt buckle switch may adjust the inflation rate of the Advanced Front Air Bags.

This vehicle may be equipped with driver and/or front passenger seat track position sensors that may adjust the inflation rate of the Advanced Front Air Bags based upon seat position.

This vehicle is equipped with a right front passenger Occupant Classification System (“OCS”) that is designed to provide Passenger Advanced Front Air Bag output appropriate to the occupant’s seated weight input, as determined by the OCS.

WARNING!

- **No objects should be placed over or near the air bag on the instrument panel or steering wheel because**

(Continued)

WARNING! ***(Continued)***

any such objects could cause harm if the vehicle is in a collision severe enough to cause the air bag to inflate.

- **Do not put anything on or around the air bag covers or attempt to open them manually. You may damage the air bags and you could be injured because the air bags may no longer be functional. The protective covers for the air bag cushions are designed to open only when the air bags are inflating.**
- **Relying on the air bags alone could lead to more severe injuries in a collision. The air bags work with your seat belt to restrain you properly. In some collisions, air bags won't deploy at all. Always wear your seat belts even though you have air bags.**

Front Air Bag Operation

Front Air Bags are designed to provide additional protection by supplementing the seat belts. Front air bags are not expected to reduce the risk of injury in rear, side, or rollover collisions. The front air bags will not deploy in all frontal collisions, including some that may produce substantial vehicle damage — for example, some pole collisions, truck underrides, and angle offset collisions.

On the other hand, depending on the type and location of impact, front air bags may deploy in crashes with little vehicle front-end damage but that produce a severe initial deceleration.

Because air bag sensors measure vehicle deceleration over time, vehicle speed and damage by themselves are not good indicators of whether or not an air bag should have deployed.

Seat belts are necessary for your protection in all collisions, and also are needed to help keep you in position, away from an inflating air bag.

When the ORC detects a collision requiring the front air bags, it signals the inflator units. A large quantity of non-toxic gas is generated to inflate the front air bags.

The steering wheel hub trim cover and the upper right side of the instrument panel separate and fold out of the way as the air bags inflate to their full size. The front air bags fully inflate in less time than it takes to blink your eyes. The front air bags then quickly deflate while helping to restrain the driver and front passenger.

Occupant Classification System (OCS) — Front Passenger Seat

The OCS is part of a Federally regulated safety system for this vehicle. It is designed to provide Passenger Advanced Front Air Bag output appropriate to the occupant's seated weight, as determined by the OCS.

The Occupant Classification System (OCS) consists of the following:

- Occupant Restraint Controller (ORC)
- Occupant Classification Module (OCM) and Sensor located in the front passenger seat
- Air Bag Warning Light

Occupant Classification Module (OCM) And Sensor

The Occupant Classification Module (OCM) is located underneath the front passenger seat. The Sensor is located beneath the passenger seat cushion foam. Any weight on the seat will be sensed by the Sensor. The OCM uses input from the Sensor to determine the front passenger's most probable classification. The OCM communicates this information to the ORC. The ORC may reduce the inflation rate of the Passenger Advanced Front Air Bag deployment based on occupant classification. In order for the OCS to operate as designed, it is important for the front passenger to be seated properly and properly wearing the seat belt.

The OCS will NOT prevent deployment of the Passenger Advanced Front Air Bag. The OCS may reduce the inflation rate of the Passenger Advanced Front Air Bag if the OCS estimates that:

- The front passenger seat is unoccupied or has very light objects on it; or
- The front passenger seat is occupied by a small passenger, including a child; or
- The front passenger seat is occupied by a rear-facing child restraint; or
- The front passenger is not properly seated or his or her weight is taken off of the seat for a period of time.

Front Passenger Seat Occupant Status	Front Passenger Air Bag Output
Rear-facing child restraint	Reduced-power deployment
Child, including a child in a forward-facing child restraint or booster seat*	Reduced-power deployment OR Full-power deployment

Front Passenger Seat Occupant Status	Front Passenger Air Bag Output
Properly seated adult	Full-power deployment OR reduced-power deployment
Unoccupied seat	Reduced-power deployment

* It is possible for a child to be classified as an adult, allowing a full-power Passenger Advanced Front Air Bag deployment. Never allow children to ride in the front passenger seat and never install a child restraint system, including a rear-facing child restraint, in the front passenger seat.

WARNING!

- **Never place a rear-facing child restraint in front of an air bag. A deploying passenger front air bag can cause death or serious injury to a child 12 years or younger, including a child in a rear-facing child restraint.**
- **Only use a rear-facing child restraint in a vehicle with a rear seat.**

(Continued)

WARNING! *(Continued)*

- **Children 12 years or younger should always ride buckled up in a vehicle with a rear seat.**

The OCS determines the front passenger's most probable classification. The OCS estimates the seated weight on the front passenger seat and where that weight is located. The OCS communicates the classification status to the ORC. The ORC uses the classification to determine whether the Passenger Advanced Front Air Bag inflation rate should be adjusted.

In order for the OCS to operate as designed, it is important for the front passenger to be seated properly and properly wearing the seat belt. Properly seated passengers are:

- Sitting upright
- Facing forward
- Sitting in the center of the seat with their feet comfortably on or near the floor
- Sitting with their back against the seatback and the seatback in an upright position

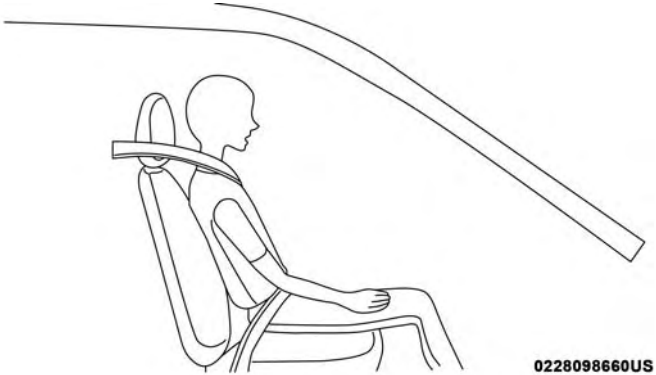

Seated Properly

Lighter Weight Passengers (Including Small Adults)

When a lighter weight passenger, including a small adult, occupies the front passenger seat, the OCS may reduce the inflation rate of the Passenger Advanced Front Air Bag. This does not mean that the OCS is working improperly.

Do not decrease OR increase the front passenger's seated weight on the front passenger seat

The front passenger's seated weight must be properly positioned on the front passenger seat. Failure to do so may result in serious injury or death. The OCS determines the most probable classification of the occupant that it detects. The OCS will detect the front passenger's decreased or increased seated weight, which may result in an adjusted inflation rate of the Passenger Advanced Front Air Bag in a collision. This does not mean that the OCS is working improperly. Decreasing the front passenger's seated weight on the front passenger seat may result in a reduced-power deployment of the Passenger Advanced Front Air Bag. Increasing the front passenger's seated weight on the front passenger seat may result in a full-power deployment of the Passenger Advanced Front Air Bag.

Examples of improper front passenger seating include:

- The front passenger's weight is transferred to another part of the vehicle (like the door, arm rest or instrument panel).
- The front passenger leans forward, sideways, or turns to face the rear of the vehicle.
- The front passenger's seatback is not in the full upright position.
- The front passenger carries or holds an object while seated (e.g., backpack, box, etc.).
- Objects are lodged under the front passenger seat.
- Objects are lodged between the front passenger seat and center console.

- Accessories that may change the seated weight on the front passenger seat are attached to the front passenger seat.
- Anything that may decrease or increase the front passenger's seated weight.

The OCS determines the front passenger's most probable classification. If an occupant in the front passenger seat is seated improperly, the occupant may provide an output signal to the OCS that is different from the occupant's properly seated weight input, for example:

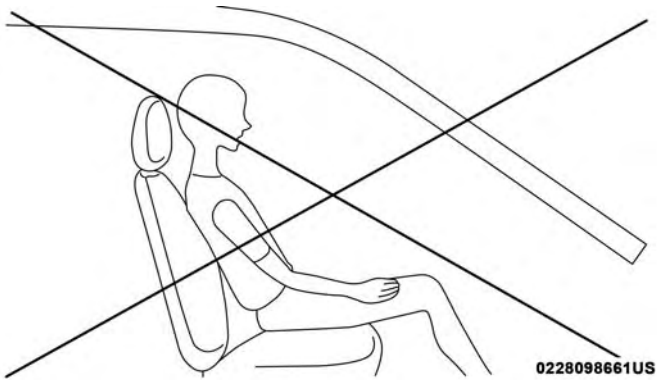

Not Seated Properly

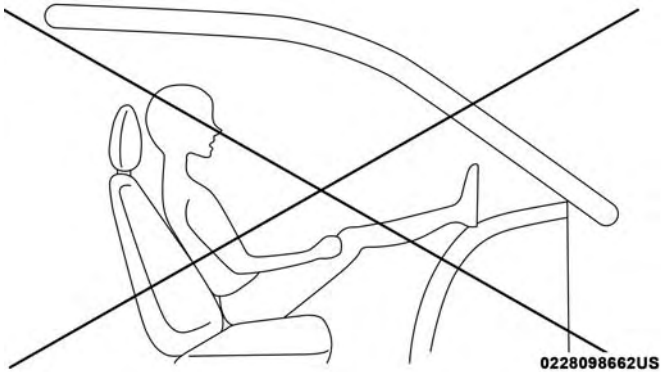

Not Seated Properly

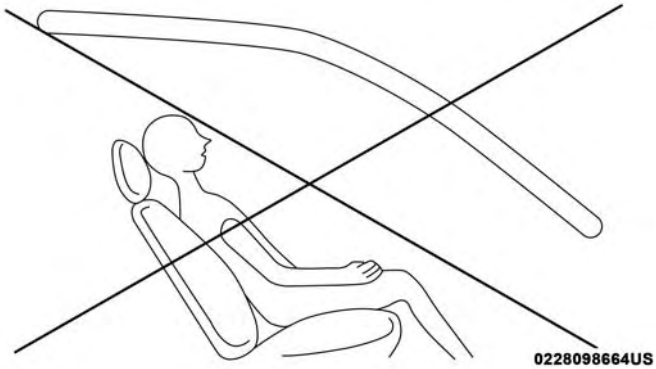

Not Seated Properly

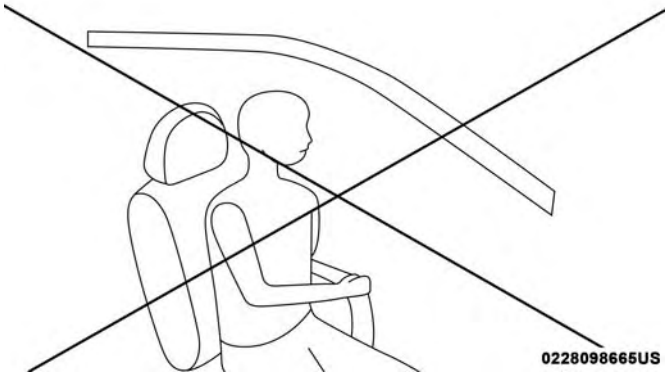

Not Seated Properly

WARNING!

- **If a child restraint system, child, small teenager or adult in the front passenger seat is seated improperly, the occupant may provide an output signal to the OCS that is different from the occupant's properly seated weight input. This may result in serious injury or death in a collision.**
- **Always wear your seat belt and sit properly, with the seatback in an upright position, your back against**

(Continued)

WARNING! ***(Continued)***

the seatback, sitting upright, facing forward, in the center of the seat, with your feet comfortably on or near the floor.

- **Do not carry or hold any objects (e.g., backpacks, boxes, etc.) while seated in the front passenger seat. Holding an object may provide an output signal to the OCS that is different than the occupant's properly seated weight input, which may result in serious injury or death in a collision.**
- **Placing an object on the floor under the front passenger seat may prevent the OCS from working properly, which may result in serious injury or death in a collision. Do not place any objects on the floor under the front passenger seat.**

The Air Bag Warning Light in the instrument panel will turn on whenever the OCS is unable to classify the front passenger seat status. A malfunction in the OCS may affect the operation of the air bag system.

If the Air Bag Warning Light does not come on, or stays on after you start the vehicle, or it comes on as you drive, take the vehicle to an authorized dealer for service immediately.

The passenger seat assembly contains critical OCS components that may affect the Passenger Advanced Front Air Bag inflation. In order for the OCS to properly classify the seated weight of a front seat passenger, the OCS components must function as designed. Do not make any modifications to the front passenger seat components, assembly, or to the seat cover. If the seat, trim cover, or cushion needs service for any reason, take the vehicle to your authorized dealer. Only FCA US LLC approved seat accessories may be used.

The following requirements must be strictly followed:

- Do not modify the front passenger seat assembly or components in any way.
- Do not use prior or future model year seat covers or cushions not designated by FCA US LLC for the specific model being repaired. Always use the correct seat cover and cushion specified for the vehicle.
- Do not replace the seat cover or cushion with an aftermarket seat cover or cushion.
- Do not add a secondary seat cover or mat.

- At no time should any Supplemental Restraint System (SRS) component or SRS related component or fastener be modified or replaced with any part except those which are approved by FCA US LLC.

WARNING!

- **Unapproved modifications or service procedures to the passenger seat assembly, its related components, seat cover or cushion may inadvertently change the air bag deployment in case of a frontal collision. This could result in death or serious injury to the front passenger if the vehicle is involved in a collision. A modified vehicle may not comply with required Federal Motor Vehicle Safety Standards (FMVSS) and/or Canadian Motor Vehicle Safety Standards (CMVSS).**
- **If it is necessary to modify the air bag system for persons with disabilities, contact your authorized dealer.**

Occupant Classification System (OCS) – Front Passenger Seat Equipped With Flip 'n Stow

The front passenger seat may be equipped with Flip 'n Stow Front Passenger Seat Storage (refer to "Internal Equipment" in Getting To Know Your Vehicle" for additional information). Make sure that objects inside the Flip 'n Stow Front Passenger Seat Storage bin do not interfere with the latch before closing the seat. In addition, after closing the Front Passenger Seat Storage bin, make sure the front passenger seat cushion is pushed downward and fully latched to the base. Over-stuffing the storage bin may result in the OCS inaccurately classifying the front passenger's seated weight.

WARNING!

Make sure that objects inside the Flip 'n Stow Front Passenger Seat Storage bin do not interfere with the latch before closing the seat. In addition, after closing the Front Passenger Seat Storage bin, make sure the front passenger seat cushion is pushed downward and fully latched to the base. Over-stuffing the storage bin, or a not fully latched passenger seat cushion, may result in misclassification of the front passenger's weight. This may result in serious injury or death in a collision.

Knee Impact Bolsters

The Knee Impact Bolsters help protect the knees of the driver and front passenger, and position the front occupants for improved interaction with the front air bags.

WARNING!

- **Do not drill, cut, or tamper with the knee impact bolsters in any way.**
- **Do not mount any accessories to the knee impact bolsters such as alarm lights, stereos, citizen band radios, etc.**

Supplemental Knee Air Bags

Supplemental Driver And Front Passenger Knee Air Bags

This vehicle is equipped with a Supplemental Driver Knee Air Bag mounted in the instrument panel below the steering column and a Supplemental Passenger Knee Air Bag mounted in the instrument panel below the glove compartment. The Supplemental Knee Air Bags provide enhanced protection during a frontal impact by working together with the seat belts, pretensioners, and front air bags.

Supplemental Side Air Bags

Your vehicle is equipped with two types of side air bags:

1. **Supplemental Seat-Mounted Side Air Bags (SABs): Located in the outboard side of the front and rear (in vehicles equipped with rear seat SABs) seats. The SABs are marked with a "SRS AIRBAG" or "AIRBAG" label sewn into the outboard side of the seats.**

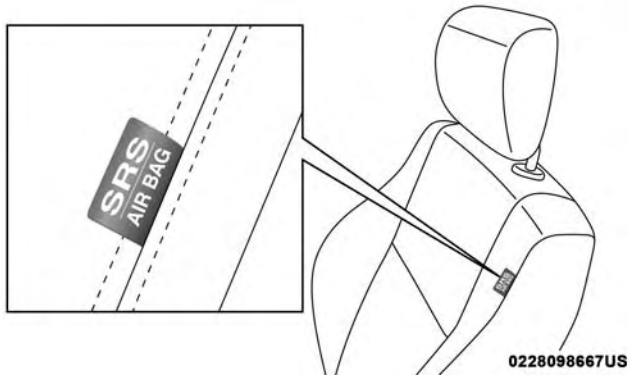

Front Supplemental Seat-Mounted Side Air Bag Label

The SABs may help to reduce the risk of occupant injury during certain side impact and/or vehicle rollover events, in addition to the injury reduction potential provided by the seat belts and body structure.

When the SAB deploys, it opens the seam on the outboard side of the seatback's trim cover (front seats) and the seam on the outboard side of the seat cushion's trim cover (outboard rear seats — if equipped with rear SABs). The inflating SAB deploys through the seat seam into the space between the occupant and the door. The SAB moves at a very high speed and with such a high force that it could injure occupants if they are not seated properly, or if items are positioned in the area where the SAB inflates. Children are at an even greater risk of injury from a deploying air bag.

WARNING!

Do not use accessory seat covers or place objects between you and the Side Air Bags; the performance could be adversely affected and/or objects could be pushed into you, causing serious injury.

2. **Supplemental Side Air Bag Inflatable Curtains (SABICs): Located above the side windows. The trim covering the SABICs is labeled "SRS AIRBAG" or "AIRBAG."**

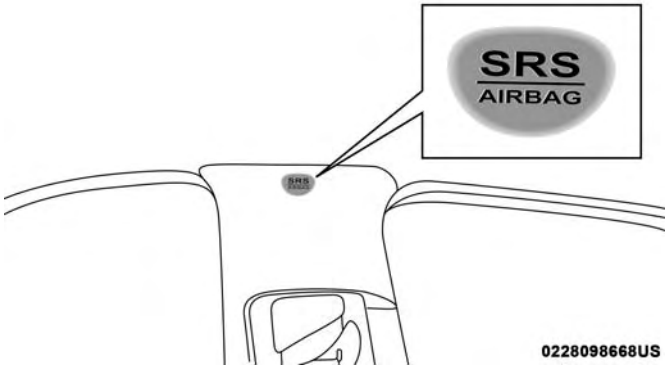

Supplemental Side Air Bag Inflatable Curtain (SABIC) Label Location

SABICs may help reduce the risk of head or other injuries to front and rear seat outboard occupants in certain side impacts and/or vehicle rollover events, in addition to the injury reduction potential provided by the seat belts and body structure.

The SABICs deploy downward, covering the side windows. An inflating SABIC pushes the outside edge of the trim out of the way and covers the window. The SABICs inflate with enough force to injure occupants if they are not belted and seated properly, or if items are positioned in the

area where the SABICs inflate. Children are at an even greater risk of injury from a deploying air bag.

WARNING!

- **Do not stack luggage or other cargo up high enough to block the deployment of the SABICs. The trim covering above the side windows where the SABIC and its deployment path are located should remain free from any obstructions.**
- **In order for the SABICs to work as intended, do not install any accessory items in your vehicle which could alter the roof. Do not add an aftermarket sunroof to your vehicle. Do not add roof racks that require permanent attachments (bolts or screws) for installation on the vehicle roof. Do not drill into the roof of the vehicle for any reason.**

The SABICs and SABs (Side Air Bags) are designed to activate in certain side impacts and certain rollover events. The Occupant Restraint Controller (ORC) determines whether the deployment of the Side Air Bags in a particular side impact or rollover event is appropriate, based on the severity and type of collision. Vehicle damage by itself is not a good indicator of whether or not Side Air Bags should have deployed.

Side Air Bags are a supplement to the seat belt restraint system. Side Air Bags deploy in less time than it takes to blink your eyes.

WARNING!

- **Occupants, including children, who are up against or very close to Side Air Bags can be seriously injured or killed. Occupants, including children, should never lean on or sleep against the door, side windows, or area where the side air bags inflate, even if they are in an infant or child restraint.**
- **Seat belts (and child restraints where appropriate) are necessary for your protection in all collisions. They also help keep you in position, away from an inflating Side Air Bag. To get the best protection from the Side Air Bags, occupants must wear their seat belts properly and sit upright with their backs against the seats. Children must be properly restrained in a child restraint or booster seat that is appropriate for the size of the child.**

WARNING!

- **Side Air Bags need room to inflate. Do not lean against the door or window. Sit upright in the center of the seat.**
- **Being too close to the Side Air Bags during deployment could cause you to be severely injured or killed.**
- **Relying on the Side Air Bags alone could lead to more severe injuries in a collision. The Side Air Bags work with your seat belt to restrain you properly. In some collisions, Side Air Bags won't deploy at all. Always wear your seat belt even though you have Side Air Bags.**

NOTE: Air bag covers may not be obvious in the interior trim, but they will open during air bag deployment.

Side Impacts

In side impacts, the side impact sensors aid the ORC in determining the appropriate response to impact events. The system is calibrated to deploy the Side Air Bags on the impact side of the vehicle during impacts that require Side Air Bag occupant protection. In side impacts, the Side Air Bags deploy independently; a left side impact deploys the left Side Air Bags only and a right side impact deploys the right Side Air Bags only.

The Side Air Bags will not deploy in all side collisions, including some collisions at certain angles, or some side collisions that do not impact the area of the passenger compartment. The Side Air Bags may deploy during angled or offset frontal collisions where the front air bags deploy.

Rollover Events

Side Air Bags are designed to activate in certain rollover events. The ORC determines whether the deployment of the Side Air Bags in a particular rollover event is appropriate, based on the severity and type of collision. Vehicle damage by itself is not a good indicator of whether or not Side Air Bags should have deployed.

The Side Air Bags will not deploy in all rollover events. The rollover sensing-system determines if a rollover event may be in progress and whether deployment is appropriate. A slower-developing event may deploy the seat belt pretensioners on both sides of the vehicle. A faster-developing event may deploy the seat belt pretensioners as well as the Side Air Bags on both sides of the vehicle. The rollover

sensing-system may also deploy the seat belt pretensioners, with or without the Side Air Bags, on both sides of the vehicle if the vehicle experiences a near rollover event.

The SABICs may help reduce the risk of partial or complete ejection of vehicle occupants through side windows in certain rollover or side impact events.

The Occupant Restraint Controller (ORC) monitors the internal circuits and interconnecting wiring associated with electrical Air Bag System Components listed below:

Air Bag System Components

- Occupant Restraint Controller (ORC)
- Air Bag Warning Light
- Steering Wheel and Column
- Instrument Panel
- Knee Impact Bolsters
- Driver and Front Passenger Air Bags
- Supplemental Side Air Bags
- Supplemental Knee Air Bags
- Front and Side Impact Sensors
- Seat Belt Pretensioners
- Seat Track Position Sensors
- Seat Belt Buckle Switch
- Occupant Classification System

If A Deployment Occurs

The front air bags are designed to deflate immediately after deployment.

NOTE: Front and/or side air bags will not deploy in all collisions. This does not mean something is wrong with the air bag system.

If you do have a collision which deploys the air bags, any or all of the following may occur:

- The air bag material may sometimes cause abrasions and/or skin reddening to the occupants as the air bags deploy and unfold. The abrasions are similar to friction rope burns or those you might get sliding along a carpet or gymnasium floor. They are not caused by contact with chemicals. They are not permanent and normally heal quickly. However, if you haven't healed significantly within a few days, or if you have any blistering, see your doctor immediately.

- As the air bags deflate, you may see some smoke-like particles. The particles are a normal by-product of the process that generates the non-toxic gas used for air bag inflation. These airborne particles may irritate the skin, eyes, nose, or throat. If you have skin or eye irritation, rinse the area with cool water. For nose or throat irritation, move to fresh air. If the irritation continues, see your doctor. If these particles settle on your clothing, follow the garment manufacturer's instructions for cleaning.

Do not drive your vehicle after the air bags have deployed. If you are involved in another collision, the air bags will not be in place to protect you.

WARNING!

Deployed air bags and seat belt pretensioners cannot protect you in another collision. Have the air bags, seat belt pretensioners, and the seat belt retractor assemblies replaced by an authorized dealer immediately. Also, have the Occupant Restraint Controller System serviced as well.

NOTE:

- Air bag covers may not be obvious in the interior trim, but they will open during air bag deployment.
- After any collision, the vehicle should be taken to an authorized dealer immediately.

Enhanced Accident Response System

In the event of an impact, if the communication network remains intact, and the power remains intact, depending on the nature of the event, the ORC will determine whether to have the Enhanced Accident Response System perform the following functions:

- Cut off fuel to the engine.
- Flash hazard lights as long as the battery has power or until the hazard light button is pressed. The hazard lights can be deactivated by pressing the hazard light button.
- Turn on the interior lights, which remain on as long as the battery has power.
- Unlock the power door locks.

Enhanced Accident Response System Reset Procedure

In order to reset the Enhanced Accident Response System functions after an event, the ignition switch must be changed from ignition START or ON/RUN to ignition OFF. Carefully check the vehicle for fuel leaks in the engine compartment and on the ground near the engine compartment and fuel tank before resetting the system and starting the engine.

Maintaining Your Air Bag System

WARNING!

- **Modifications to any part of the air bag system could cause it to fail when you need it. You could be injured if the air bag system is not there to protect you. Do not modify the components or wiring, including adding any kind of badges or stickers to the steering wheel hub trim cover or the upper right side of the instrument panel. Do not modify the front bumper, vehicle body structure, or add aftermarket side steps or running boards.**
- **It is dangerous to try to repair any part of the air bag system yourself. Be sure to tell anyone who works on your vehicle that it has an air bag system.**

(Continued)

WARNING! *(Continued)*

- **Do not attempt to modify any part of your air bag system. The air bag may inflate accidentally or may not function properly if modifications are made. Take your vehicle to an authorized dealer for any air bag system service. If your seat, including your trim cover and cushion, needs to be serviced in any way (including removal or loosening/tightening of seat attachment bolts), take the vehicle to your authorized dealer. Only manufacturer approved seat accessories may be used. If it is necessary to modify the air bag system for persons with disabilities, contact your authorized dealer.**

Event Data Recorder (EDR)

This vehicle is equipped with an event data recorder (EDR). The main purpose of an EDR is to record, in certain crash or near crash-like situations, such as an air bag deployment or hitting a road obstacle, data that will assist in understanding how a vehicle's systems performed. The EDR is designed to record data related to vehicle dynamics and safety systems for a short period of time, typically 30 seconds or less. The EDR in this vehicle is designed to record such data as:

- How various systems in your vehicle were operating;
- Whether or not the driver and passenger safety belts were buckled/fastened;
- How far (if at all) the driver was depressing the accelerator and/or brake pedal; and,
- How fast the vehicle was traveling.

These data can help provide a better understanding of the circumstances in which crashes and injuries occur.

NOTE: EDR data are recorded by your vehicle only if a non-trivial crash situation occurs; no data are recorded by the EDR under normal driving conditions and no personal data (e.g., name, gender, age, and crash location) are recorded. However, other parties, such as law enforcement, could combine the EDR data with the type of personally identifying data routinely acquired during a crash investigation.

To read data recorded by an EDR, special equipment is required, and access to the vehicle or the EDR is needed. In addition to the vehicle manufacturer, other parties, such as law enforcement, that have the special equipment, can read the information if they have access to the vehicle or the EDR.

Child Restraints

Everyone in your vehicle needs to be buckled up at all times, including babies and children. Every state in the United States, and every Canadian province, requires that small children ride in proper restraint systems. This is the law, and you can be prosecuted for ignoring it.

Children 12 years or younger should ride properly buckled up in a rear seat, if available. According to crash statistics, children are safer when properly restrained in the rear seats rather than in the front.

WARNING!

In a collision, an unrestrained child can become a projectile inside the vehicle. The force required to hold even an infant on your lap could become so great that you could not hold the child, no matter how strong you are. The child and others could be badly injured or killed. Any child riding in your vehicle should be in a proper restraint for the child's size.

There are different sizes and types of restraints for children from newborn size to the child almost large enough for an adult safety belt. Always check the child seat Owner's Manual to make sure you have the correct seat for your child. Carefully read and follow all the instructions and warnings in the child restraint Owner's Manual and on all the labels attached to the child restraint.

Before buying any restraint system, make sure that it has a label certifying that it meets all applicable Safety Standards. You should also make sure that you can install it in the vehicle where you will use it.

NOTE:

- For additional information, refer to www.safercar.gov/parents/index.htm or call: 1–888–327–4236
- Canadian residents should refer to Transport Canada's website for additional information: http://www.tc.gc.ca/eng/motorvehiclesafety/safedrivers-childsafety-index-53.htm

Summary Of Recommendations For Restraining Children In Vehicles

	Child Size, Height, Weight or Age	Recommended Type of Child Restraint
Infants and Toddlers	Children who are two years old or younger and who have not reached the height or weight limits of their child restraint	Either an Infant Carrier or a Convertible Child Restraint, facing rearward in the rear seat of the vehicle
Small Children	Children who are at least two years old or who have out-grown the height or weight limit of their rear-facing child restraint	Forward-Facing Child Restraint with a five-point Harness, facing forward in the rear seat of the vehicle

	Child Size, Height, Weight or Age	Recommended Type of Child Restraint
Larger Children	Children who have out-grown their forward-facing child restraint, but are too small to properly fit the vehicle's seat belt	Belt Positioning Booster Seat and the vehicle seat belt, seated in the rear seat of the vehicle
Children Too Large for Child Restraints	Children 12 years old or younger, who have out-grown the height or weight limit of their booster seat	Vehicle Seat Belt, seated in the rear seat of the vehicle

Infant And Child Restraints

Safety experts recommend that children ride rear-facing in the vehicle until they are two years old or until they reach either the height or weight limit of their rear-facing child restraint. Two types of child restraints can be used rear-facing: infant carriers and convertible child seats.

The infant carrier is only used rear-facing in the vehicle. It is recommended for children from birth until they reach the weight or height limit of the infant carrier. Convertible child seats can be used either rear-facing or forward-facing in the vehicle. Convertible child seats often have a higher weight limit in the rear-facing direction than infant carriers do, so they can be used rear-facing by children who have outgrown their infant carrier but are still less than at least two years old. Children should remain rear-facing until they reach the highest weight or height allowed by their convertible child seat.

WARNING!

- **Never place a rear-facing child restraint in front of an air bag. A deploying passenger front air bag can cause death or serious injury to a child 12 years or younger, including a child in a rear-facing child restraint.**
- **Only use a rear-facing child restraint in a vehicle with a rear seat.**

Older Children And Child Restraints

Children who are two years old or who have outgrown their rear-facing convertible child seat can ride forward-facing in the vehicle. Forward-facing child seats and convertible child seats used in the forward-facing direction are for children who are over two years old or who have outgrown the rear-facing weight or height limit of their rear-facing convertible child seat. Children should remain in a forward-facing child seat with a harness for as long as possible, up to the highest weight or height allowed by the child seat.

All children whose weight or height is above the forward-facing limit for the child seat should use a belt-positioning booster seat until the vehicle's seat belts fit properly. If the child cannot sit with knees bent over the vehicle's seat cushion while the child's back is against the seatback, they should use a belt-positioning booster seat. The child and belt-positioning booster seat are held in the vehicle by the seat belt.

WARNING!

- **Improper installation can lead to failure of an infant or child restraint. It could come loose in a collision. The child could be badly injured or killed. Follow the child restraint manufacturer's directions exactly when installing an infant or child restraint.**
- **After a child restraint is installed in the vehicle, do not move the vehicle seat forward or rearward because it can loosen the child restraint attachments. Remove the child restraint before adjusting the vehicle seat position. When the vehicle seat has been adjusted, reinstall the child restraint.**
- **When your child restraint is not in use, secure it in the vehicle with the seat belt or LATCH anchorages, or remove it from the vehicle. Do not leave it loose in the vehicle. In a sudden stop or accident, it could strike the occupants or seatbacks and cause serious personal injury.**

Children Too Large For Booster Seats

Children who are large enough to wear the shoulder belt comfortably, and whose legs are long enough to bend over the front of the seat when their back is against the seatback, should use the seat belt in a rear seat. Use this simple 5-step test to decide whether the child can use the vehicle's seat belt alone:

1. Can the child sit all the way back against the back of the vehicle seat?
2. Do the child's knees bend comfortably over the front of the vehicle seat – while they are still sitting all the way back?
3. Does the shoulder belt cross the child's shoulder between their neck and arm?
4. Is the lap part of the belt as low as possible, touching the child's thighs and not their stomach?
5. Can the child stay seated like this for the whole trip?

If the answer to any of these questions was "no," then the child still needs to use a booster seat in this vehicle. If the child is using the lap/shoulder belt, check seat belt fit periodically and make sure the seat belt buckle is latched. A child's squirming or slouching can move the belt out of position. If the shoulder belt contacts the face or neck, move the child closer to the center of the vehicle, or use a booster seat to position the seat belt on the child correctly.

WARNING!

Never allow a child to put the shoulder belt under an arm or behind their back. In a crash, the shoulder belt will not protect a child properly, which may result in serious injury or death. A child must always wear both the lap and shoulder portions of the seat belt correctly.

Recommendations For Attaching Child Restraints

Restraint Type	Combined Weight of the Child + Child Restraint	Use Any Attachment Method Shown With An "X" Below			
		LATCH – Lower Anchors Only	Seat Belt Only	LATCH – Lower Anchors + Top Tether Anchor	Seat Belt + Top Tether Anchor
Rear-Facing Child Restraint	Up to 65 lbs (29.5 kg)	X	X		
Rear-Facing Child Restraint	More than 65 lbs (29.5 kg)		X		
Forward-Facing Child Restraint	Up to 65 lbs (29.5 kg)			X	X
Forward-Facing Child Restraint	More than 65 lbs (29.5 kg)				X

Lower Anchors And Tethers For CHildren (LATCH) Restraint System

LATCH Label

Your vehicle is equipped with the child restraint anchorage system called LATCH, which stands for Lower Anchors and Tethers for CHildren. The LATCH system has three vehicle anchor points for installing LATCH-equipped child seats. There are two lower anchorages located at the back of the seat cushion where it meets the seatback and one top tether anchorage located behind the seating position. These anchorages are used to install LATCH-equipped child seats without using the vehicle's seat belts. Some seating positions may have a top tether anchorage but no lower anchorages. In these seating positions, the seat belt must be used with the top tether anchorage to install the child restraint. Please see the following table for more information.

LATCH Positions For Installing Child Restraints In This Vehicle

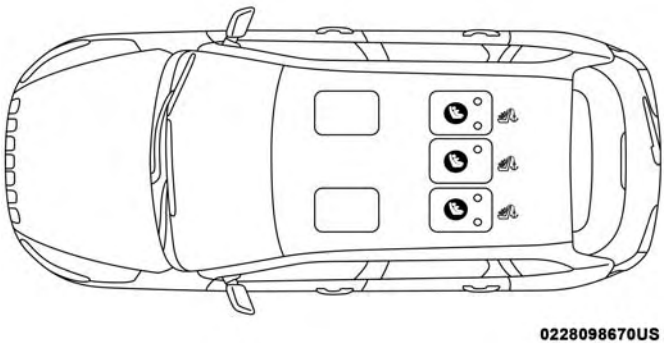

Second Row LATCH Positions

Lower Anchorage Symbol (2 Anchorages Per Seating Position)
Top Tether Anchorage Symbol

Frequently Asked Questions About Installing Child Restraints With LATCH		
What is the weight limit (child's weight + weight of the child restraint) for using the LATCH anchorage system to attach the child restraint?	65 lbs (29.5 kg)	Use the LATCH anchorage system until the combined weight of the child and the child restraint is 65 lbs (29.5 kg). Use the seat belt and tether anchor instead of the LATCH system once the combined weight is more than 65 lbs (29.5 kg).
Can the LATCH anchorages and the seat belt be used together to attach a rear-facing or forward-facing child restraint?	No	Do not use the seat belt when you use the LATCH anchorage system to attach a rear-facing or forward-facing child restraint. Booster seats may be attached to the LATCH anchorages if allowed by the booster seat manufacturer. See your booster seat owner's manual for more information.
Can two child restraints be attached using a common lower LATCH anchorage?	No	Never "share" a LATCH anchorage with two or more child restraints. If the center position does not have dedicated LATCH lower anchorages, use the seat belt to install a child seat in the center position next to a child seat using the LATCH anchorages in an outboard position.

Frequently Asked Questions About Installing Child Restraints With LATCH		
Can the rear-facing child restraint touch the back of the front passenger seat?	Yes	The child seat may touch the back of the front passenger seat if the child restraint manufacturer also allows contact. See your child restraint owner's manual for more information.
Can the head restraints be removed?	Yes	All rear head restraints may be removed.

Locating The LATCH Anchorages

The lower anchorages are round bars that are found at the rear of the seat cushion where it meets the seatback. They are just visible when you lean into the rear seat to install the child restraint. You will easily feel them if you run your finger along the gap between the seatback and seat cushion.

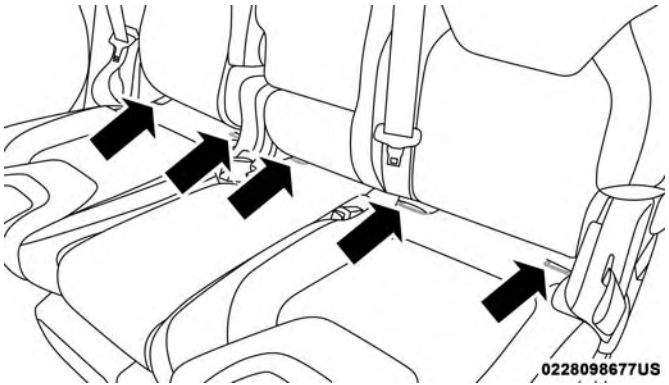

LATCH Anchorages

Locating The Upper Tether Anchorages

There are tether strap anchorages behind each rear seating position located on the back of the seat.

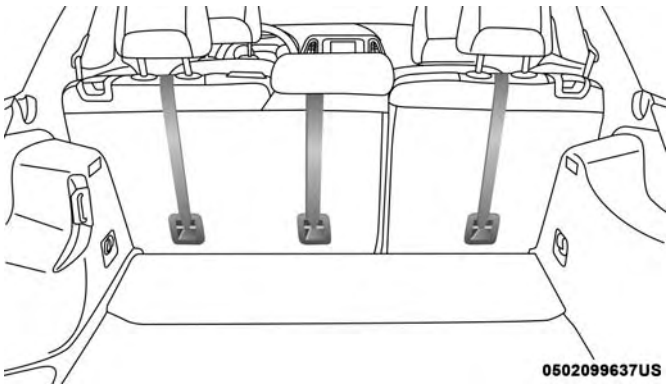

Tether Anchorage Locations

LATCH-compatible child restraint systems will be equipped with a rigid bar or a flexible strap on each side. Each will have a hook or connector to attach to the lower anchorage and a way to tighten the connection to the anchorage. Forward-facing child restraints and some rear-facing child restraints will also be equipped with a tether strap. The tether strap will have a hook at the end to attach to the top tether anchorage and a way to tighten the strap after it is attached to the anchorage.

Center Seat LATCH

This vehicle has 5 lower LATCH anchorages in the rear seat. Anchorages A and B are used for the right outboard position behind the front passenger (1). Anchorages D and E are used for the left outboard position behind the driver (3). Anchorages C and D are used for the center seating position (2). Do not install a LATCH-compatible child restraint using anchorages B and C. This is not a LATCH–compatible position in your vehicle.

You can install up to two child seats using the LATCH system at the same time. If you can fit three child restraints in your vehicle, you must use the seat belt to install the center child restraint and you must use the LATCH anchors for position (3) behind the driver. You can use either the LATCH anchors or the vehicle's seat belt for installing the third child seat in position (1) behind the front passenger.

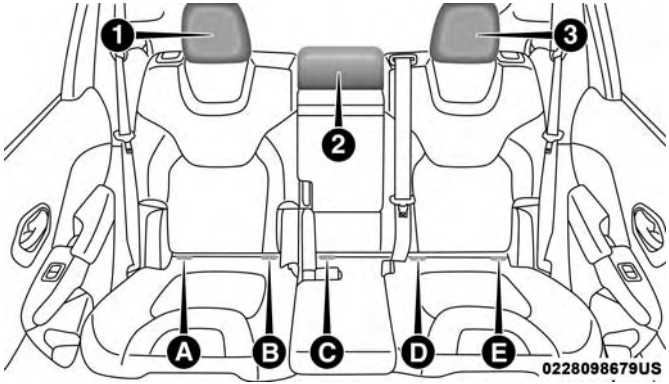

LATCH Positions

Options for installing two child seats using the LATCH anchorages in this vehicle:

1. Right and left outboard seating positions (1 and 3): Install the child seats in the right and left outboard seating positions using lower anchorages A and B, and D and E. Do not use the center seat anchorage, C. If the child seats do not block the center seat belt webbing and buckle, the center seat belt can be used to restraint an occupant or child restraint in the center seating position.

2. Right outboard and center seating positions (1 and 2): Install the first child seat in the right outboard seating position using lower anchorages A and B. Install the second child seat using the center anchorages, C and D. Do not use the outer anchorage closest to the opposite door, E. Do not use the remaining left outboard seating position (3) for any occupant. The center child restraint will block the seat belt buckle for this position.

WARNING!

- **Use anchorages C and D to install a LATCH-compatible child restraint in the center seating position (2). Do not install a LATCH-compatible child restraint using anchorages B and C. This is not a LATCH-compatible position in your vehicle.**
- **A child restraint installed in the center position (2) will block the seat belt buckle for the empty left outboard seat behind the driver (3). Do not use this seat for another occupant.**
- **Never use the same lower anchorage to attach more than one child restraint.**
- **If you are installing three child restraints next to each other, you must use the seat belt and the center tether anchor for the center position. You must use the LATCH anchors to install the child seat in**

(Continued)

WARNING! *(Continued)*

position (3), behind the driver. You may use either the LATCH anchors or the vehicle's seat belt for installing the child seat in position (1), behind the front passenger. Please refer to "Installing the LATCH-Compatible Child Restraint System" for typical installation instructions.

Always follow the directions of the child restraint manufacturer when installing your child restraint. Not all child restraint systems will be installed as described here.

To Install A LATCH-Compatible Child Restraint

If the selected seating position has a Switchable Automatic Locking Retractor (ALR) seat belt, stow the seat belt, following the instructions below. See the section "Installing Child Restraints Using The Vehicle Seat Belt" to check what type of seat belt each seating position has.

1. Loosen the adjusters on the lower straps and on the tether strap of the child seat so that you can more easily attach the hooks or connectors to the vehicle anchorages.
2. Place the child seat between the lower anchorages for that seating position. For some second row seats, you may need to recline the seat and/or raise the head restraint to get a better fit. If the rear seat can be moved forward and rearward in the vehicle, you may wish to move it to its rear-most position to make room for the child seat. You may also move the front seat forward to allow more room for the child seat.
3. Attach the lower hooks or connectors of the child restraint to the lower anchorages in the selected seating position.
4. If the child restraint has a tether strap, connect it to the top tether anchorage. See the section "Installing Child Restraints Using The Top Tether Anchorage" for directions to attach a tether anchor.
5. Tighten all of the straps as you push the child restraint rearward and downward into the seat. Remove slack in the straps according to the child restraint manufacturer's instructions.
6. Test that the child restraint is installed tightly by pulling back and forth on the child seat at the belt path. It should not move more than 1 inch (25.4 mm) in any direction.

How To Stow An Unused Switchable-ALR (ALR) Seat Belt:

When using the LATCH attaching system to install a child restraint, stow all ALR seat belts that are not being used by other occupants or being used to secure child restraints. An unused belt could injure a child if they play with it and accidentally lock the seat belt retractor. Before installing a child restraint using the LATCH system, buckle the seat belt behind the child restraint and out of the child's reach. If the buckled seat belt interferes with the child restraint installation, instead of buckling it behind the child restraint, route the seat belt through the child restraint belt path and then buckle it. Do not lock the seat belt. Remind all children in the vehicle that the seat belts are not toys and that they should not play with them.

WARNING!

- **Improper installation of a child restraint to the LATCH anchorages can lead to failure of the restraint. The child could be badly injured or killed. Follow the child restraint manufacturer's directions exactly when installing an infant or child restraint.**

(Continued)

WARNING! *(Continued)*

- **Child restraint anchorages are designed to withstand only those loads imposed by correctly-fitted child restraints. Under no circumstances are they to be used for adult seat belts, harnesses, or for attaching other items or equipment to the vehicle.**

Installing Child Restraints Using The Vehicle Seat Belt

Child restraint systems are designed to be secured in vehicle seats by lap belts or the lap belt portion of a lap/shoulder belt.

WARNING!

- **Improper installation or failure to properly secure a child restraint can lead to failure of the restraint. The child could be badly injured or killed.**
- **Follow the child restraint manufacturer's directions exactly when installing an infant or child restraint.**

The seat belts in the passenger seating positions are equipped with a Switchable Automatic Locking Retractor (ALR) that is designed to keep the lap portion of the seat belt tight around the child restraint so that it is not necessary to use a locking clip. The ALR retractor can be "switched" into a locked mode by pulling all of the webbing out of the retractor and then letting the webbing retract back into the retractor. If it is locked, the ALR will make a clicking noise while the webbing is pulled back into the retractor. Refer to the "Automatic Locking Mode" description in "Switchable Automatic Locking Retractors (ALR)" under "Occupant Restraint Systems" for additional information on ALR.

Please see the table below and the following sections for more information.

Lap/Shoulder Belt Systems For Installing Child Restraints In This Vehicle

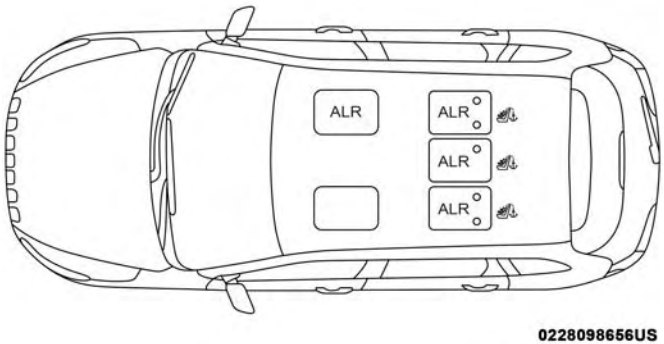

Automatic Locking Retractor (ALR) Locations

ALR = Switchable Locking Retractor
Top Tether Anchorage Symbol

Frequently Asked Questions About Installing Child Restraints With Seat Belts		
What is the weight limit (child's weight + weight of the child restraint) for using the Tether Anchor with the seat belt to attach a forward facing child restraint?	Weight limit of the Child Restraint	Always use the tether anchor when using the seat belt to install a forward facing child restraint, up to the recommended weight limit of the child restraint.
Can the rear-facing child restraint touch the back of the front passenger seat?	Yes	Contact between the front passenger seat and the child restraint is allowed, if the child restraint manufacturer also allows contact.
Can the head restraints be removed?	Yes	All rear head restraints may be removed.
Can the buckle stalk be twisted to tighten the seat belt against the belt path of the child restraint?	No	Do not twist the buckle stalk in a seating position with an ALR retractor.

Installing A Child Restraint With A Switchable Automatic Locking Retractor (ALR):

Child restraint systems are designed to be secured in vehicle seats by lap belts or the lap belt portion of a lap/shoulder belt.

WARNING!

- **Improper installation or failure to properly secure a child restraint can lead to failure of the restraint. The child could be badly injured or killed.**
- **Follow the child restraint manufacturer's directions exactly when installing an infant or child restraint.**

1. Place the child seat in the center of the seating position. For some second row seats, you may need to recline the seat and/or raise the head restraint to get a better fit. If the rear seat can be moved forward and rearward in the vehicle, you may wish to move it to its rear-most position to make room for the child seat. You may also move the front seat forward to allow more room for the child seat.
2. Pull enough of the seat belt webbing from the retractor to pass it through the belt path of the child restraint. Do not twist the belt webbing in the belt path.
3. Slide the latch plate into the buckle until you hear a "click."
4. Pull on the webbing to make the lap portion tight against the child seat.
5. To lock the seat belt, pull down on the shoulder part of the belt until you have pulled all the seat belt webbing out of the retractor. Then, allow the webbing to retract back into the retractor. As the webbing retracts, you will hear a clicking sound. This means the seat belt is now in the Automatic Locking mode.
6. Try to pull the webbing out of the retractor. If it is locked, you should not be able to pull out any webbing. If the retractor is not locked, repeat step 5.
7. Finally, pull up on any excess webbing to tighten the lap portion around the child restraint while you push the child restraint rearward and downward into the vehicle seat.
8. If the child restraint has a top tether strap and the seating position has a top tether anchorage, connect the tether strap to the anchorage and tighten the tether strap. See the section "Installing Child Restraints Using the Top Tether Anchorage" for directions to attach a tether anchor.
9. Test that the child restraint is installed tightly by pulling back and forth on the child seat at the belt path. It should not move more than 1 inch (25.4 mm) in any direction.

Any seat belt system will loosen with time, so check the belt occasionally, and pull it tight if necessary.

Installing Child Restraints Using The Top Tether Anchorage

WARNING!

Do not attach a tether strap for a rear-facing car seat to any location in front of the car seat, including the seat frame or a tether anchorage. Only attach the tether strap of a rear-facing car seat to the tether anchorage that is approved for that seating position, located behind the top of the vehicle seat. See the section "Lower Anchors and Tethers for CHildren (LATCH) Restraint System" for the location of approved tether anchorages in your vehicle.

1. Look behind the seating position where you plan to install the child restraint to find the tether anchorage. You may need to move the seat forward to provide better access to the tether anchorage. If there is no top tether anchorage for that seating position, move the child restraint to another position in the vehicle if one is available.
2. Route the tether strap to provide the most direct path for the strap between the anchor and the child seat. If your vehicle is equipped with adjustable rear head restraints, raise the head restraint, and where possible, route the tether strap under the head restraint and between the two posts. If not possible, lower the head restraint and pass the tether strap around the outboard side of the head restraint.

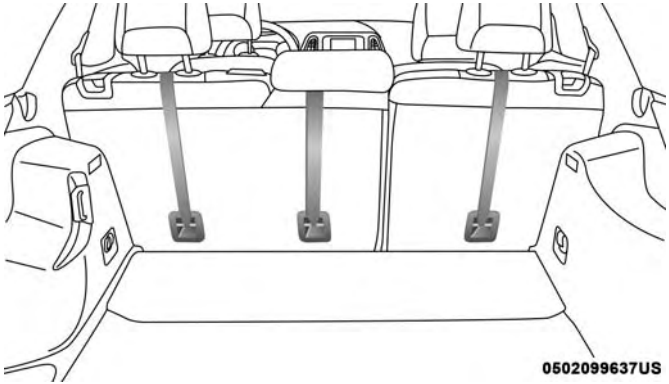

Tether Anchorage Locations

3. Attach the tether strap hook of the child restraint to the top tether anchorage as shown in the diagram.
4. Remove slack in the tether strap according to the child restraint manufacturer's instructions.

WARNING!

- **An incorrectly anchored tether strap could lead to increased head motion and possible injury to the child. Use only the anchorage position directly behind the child seat to secure a child restraint top tether strap.**
- **If your vehicle is equipped with a split rear seat, make sure the tether strap does not slip into the opening between the seatbacks as you remove slack in the strap.**

Transporting Pets

Air Bags deploying in the front seat could harm your pet. An unrestrained pet will be thrown about and possibly injured, or injure a passenger during panic braking or in a collision.

Pets should be restrained in the rear seat in pet harnesses or pet carriers that are secured by seat belts.

SAFETY TIPS

Transporting Passengers

NEVER TRANSPORT PASSENGERS IN THE CARGO AREA.

WARNING!

- **Do not leave children or animals inside parked vehicles in hot weather. Interior heat build-up may cause serious injury or death.**
- **It is extremely dangerous to ride in a cargo area, inside or outside of a vehicle. In a collision, people riding in these areas are more likely to be seriously injured or killed.**
- **Do not allow people to ride in any area of your vehicle that is not equipped with seats and seat belts.**
- **Be sure everyone in your vehicle is in a seat and using a seat belt properly.**

Exhaust Gas

WARNING!

Exhaust gases can injure or kill. They contain carbon monoxide (CO), which is colorless and odorless. Breathing it can make you unconscious and can eventually poison you. To avoid breathing (CO), follow these safety tips since vehicle equipped with a gas engine the following applies:

- **Do not run the engine in a closed garage or in confined areas any longer than needed to move your vehicle in or out of the area.**
- **If you are required to drive with the trunk/liftgate/rear doors open, make sure that all windows are closed and the climate control BLOWER switch is set at high speed. DO NOT use the recirculation mode.**
- **If it is necessary to sit in a parked vehicle with the engine running, adjust your heating or cooling controls to force outside air into the vehicle. Set the blower at high speed.**

The best protection against carbon monoxide entry into the vehicle body is a properly maintained engine exhaust system.

Whenever a change is noticed in the sound of the exhaust system, when exhaust fumes can be detected inside the vehicle, or when the underside or rear of the vehicle is damaged, have a competent mechanic inspect the complete exhaust system and adjacent body areas for broken, damaged, deteriorated, or mispositioned parts. Open seams or loose connections could permit exhaust fumes to seep into the passenger compartment. In addition, inspect the exhaust system each time the vehicle is raised for lubrication or oil change. Replace as required.

Safety Checks You Should Make Inside The Vehicle

Seat Belts

Inspect the seat belt system periodically, checking for cuts, frays, and loose parts. Damaged parts must be replaced immediately. Do not disassemble or modify the system.

Front seat belt assemblies must be replaced after a collision. Rear seat belt assemblies must be replaced after a collision if they have been damaged (i.e., bent retractor, torn webbing, etc.). If there is any question regarding seat belt or retractor condition, replace the seat belt.

Air Bag Warning Light

The Air Bag warning light will turn on for four to eight seconds as a bulb check when the ignition switch is first turned to ON/RUN. If the light is either not on during starting, stays on, or turns on while driving, have the system inspected at an authorized dealer as soon as possible. This light will illuminate with a single chime when a fault with the Air Bag Warning Light has been detected, it will stay on until the fault is cleared. If the light comes on intermittently or remains on while driving, have an authorized dealer service the vehicle immediately. Refer to “Occupant Restraint Systems” in “Safety” for further information.

Defroster

Check operation by selecting the defrost mode and place the blower control on high speed. You should be able to feel the air directed against the windshield. See your authorized dealer for service if your defroster is inoperable.

Floor Mat Safety Information

Always use floor mats designed to fit your vehicle. Only use a floor mat that does not interfere with the operation of the accelerator, brake or clutch pedals. Only use a floor mat

that is securely attached using the floor mat fasteners so it cannot slip out of position and interfere with the accelerator, brake or clutch pedals or impair safe operation of your vehicle in other ways.

WARNING!

An improperly attached, damaged, folded, or stacked floor mat, or damaged floor mat fasteners may cause your floor mat to interfere with the accelerator, brake, or clutch pedals and cause a loss of vehicle control. To prevent SERIOUS INJURY or DEATH:

- **ALWAYS securely attach your floor mat using the floor mat fasteners. DO NOT install your floor mat upside down or turn your floor mat over. Lightly pull to confirm mat is secured using the floor mat fasteners on a regular basis.**
- **ALWAYS REMOVE THE EXISTING FLOOR MAT FROM THE VEHICLE before installing any other floor mat. NEVER install or stack an additional floor mat on top of an existing floor mat.**
- **ONLY install floor mats designed to fit your vehicle. NEVER install a floor mat that cannot be properly attached and secured to your vehicle. If a floor mat**

(Continued)

WARNING! ***(Continued)***

needs to be replaced, only use a FCA approved floor mat for the specific make, model, and year of your vehicle.

- **ONLY use the driver's side floor mat on the driver's side floor area. To check for interference, with the vehicle properly parked with the engine off, fully depress the accelerator, the brake, and the clutch pedal (if present) to check for interference. If your floor mat interferes with the operation of any pedal, or is not secure to the floor, remove the floor mat from the vehicle and place the floor mat in your trunk.**
- **ONLY use the passenger's side floor mat on the passenger's side floor area.**
- **ALWAYS make sure objects cannot fall or slide into the driver's side floor area when the vehicle is moving. Objects can become trapped under accelerator, brake, or clutch pedals and could cause a loss of vehicle control.**
- **NEVER place any objects under the floor mat (e.g., towels, keys, etc.). These objects could change the position of the floor mat and may cause interference with the accelerator, brake, or clutch pedals.**

(Continued)

WARNING! *(Continued)*

- **If the vehicle carpet has been removed and re-installed, always properly attach carpet to the floor and check the floor mat fasteners are secure to the vehicle carpet. Fully depress each pedal to check for interference with the accelerator, brake, or clutch pedals then re-install the floor mats.**
- **It is recommended to only use mild soap and water to clean your floor mats. After cleaning, always check your floor mat has been properly installed and is secured to your vehicle using the floor mat fasteners by lightly pulling mat.**

Periodic Safety Checks You Should Make Outside The Vehicle

Tires

Examine tires for excessive tread wear and uneven wear patterns. Check for stones, nails, glass, or other objects lodged in the tread or sidewall. Inspect the tread for cuts and cracks. Inspect sidewalls for cuts, cracks, and bulges. Check the wheel nuts for tightness. Check the tires (including spare) for proper cold inflation pressure.

Lights

Have someone observe the operation of brake lights and exterior lights while you work the controls. Check turn signal and high beam indicator lights on the instrument panel.

Door Latches

Check for proper closing, latching, and locking.

Fluid Leaks

Check area under vehicle after overnight parking for fuel, engine coolant, oil, or other fluid leaks. Also, if gasoline fumes are detected or if fuel, or brake fluid leaks are suspected. The cause should be located and corrected immediately.

STARTING AND OPERATING

CONTENTS

■ STARTING THE ENGINE 259
- □ Normal Starting — Gasoline Engine. 259
- □ Extreme Cold Weather (Below –22°F Or –30°C) . .260
- □ Extended Park Starting 260
- □ If Engine Fails To Start 260
- □ After Starting. 261

■ ENGINE BLOCK HEATER — IF EQUIPPED 261

■ ENGINE BREAK-IN RECOMMENDATIONS 262

■ PARKING BRAKE 262
- □ Electric Park Brake (EPB) 262

■ AUTOMATIC TRANSMISSION 267
- □ Key Ignition Park Interlock 268
- □ Brake/Transmission Shift Interlock System 268
- □ Nine-Speed Automatic Transmission 268
- □ Gear Ranges 270

■ FOUR-WHEEL DRIVE OPERATION 275
- □ 1-Speed Four-Wheel Drive (4X4) — If Equipped . .275
- □ 2-Speed Four-Wheel Drive (4x4) — If Equipped . .276
- □ Shift Positions 277
- □ Shifting Procedures 278
- □ Rear Electronic Locker (E-Locker) System — If Equipped 281

■ SELEC-TERRAIN 282
- □ Description 282

■ POWER STEERING. 283

■ STOP/START SYSTEM — IF EQUIPPED. 284
- □ Automatic Mode 284
- □ Possible Reasons The Engine Does Not Autostop 285

- To Start The Engine While In Autostop Mode . . .286
- To Manually Turn Off The Stop/Start System . .287
- To Manually Turn On The Stop/Start System . . .287
- System Malfunction 287

■ SPEED CONTROL — IF EQUIPPED 287

- To Activate 288
- To Set A Desired Speed. 289
- To Vary The Speed Setting 289
- To Accelerate For Passing 290
- To Resume Speed 290
- To Deactivate 290

■ ADAPTIVE CRUISE CONTROL (ACC) — IF EQUIPPED 290

- Adaptive Cruise Control (ACC) Operation 292
- Activating Adaptive Cruise Control (ACC) 293
- To Set A Desired ACC Speed. 293
- To Activate/Deactivate 294
- To Cancel 294
- To Turn Off 295
- Resume. 295
- To Vary The Speed Setting 296
- Setting The Following Distance In ACC 297
- Overtake Aid. 300
- ACC Operation At Stop 300
- Adaptive Cruise Control (ACC) Menu 301
- Display Warnings And Maintenance 302
- Precautions While Driving With ACC. 304
- General Information 307
- Normal (Fixed Speed) Cruise Control Mode 307

■ PARKSENSE REAR PARK ASSIST — IF EQUIPPED 310

- ParkSense Sensors 310
- ParkSense Warning Display. 310
- ParkSense Display 311

- Enabling And Disabling ParkSense 315
- Service The ParkSense Rear Park Assist System. .315
- Cleaning The ParkSense System. 316
- ParkSense System Usage Precautions 316

■ PARKSENSE FRONT AND REAR PARK ASSIST — IF EQUIPPED 318

- ParkSense Sensors 319
- ParkSense Warning Display. 319
- ParkSense Display 320
- Enabling And Disabling ParkSense 329
- Service The ParkSense Park Assist System 329
- Cleaning The ParkSense System. 330
- ParkSense System Usage Precautions 330

■ PARKSENSE ACTIVE PARK ASSIST SYSTEM — IF EQUIPPED 332

- Enabling And Disabling The ParkSense Active Park Assist System. 333
- Parallel Parking Space Assistance Operation/Display 334
- Perpendicular Parking Space Assistance Operation/Display 343

■ LANESENSE — IF EQUIPPED 352

- LaneSense Operation 352
- Turning LaneSense On Or Off 353
- LaneSense Warning Message 354
- Changing LaneSense Status. 358

■ PARKVIEW REAR BACK UP CAMERA — IF EQUIPPED 359

■ REFUELING THE VEHICLE 361

■ VEHICLE LOADING 362

- Certification Label 362

■ TRAILER TOWING 364

- Common Towing Definitions. 364
- Trailer Hitch Classification 366

- Trailer Towing Weights (Maximum Trailer Weight Ratings) 367
- Trailer And Tongue Weight 368
- Towing Requirements 368
- Towing Tips 372

■ RECREATIONAL TOWING (BEHIND MOTORHOME, ETC.) 373

- Towing This Vehicle Behind Another Vehicle. . . .373
- Recreational Towing — Front-Wheel Drive (FWD) Models 375
- Recreational Towing — 4x4 Models With 1-Speed Power Transfer Unit 375
- Recreational Towing — 4x4 Models With 2-Speed Power Transfer Unit 376

■ DRIVING TIPS 380

- On-Road Driving Tips 380
- Off-Road Driving Tips 381

STARTING THE ENGINE

Before starting your vehicle, adjust your seat, adjust both inside and outside mirrors, and fasten your seat belts.

WARNING!

- **When leaving the vehicle, always remove the key fob from the ignition and lock your vehicle. If equipped with Keyless Enter-N-Go, always make sure the keyless ignition node is in "OFF" mode, remove the key fob from the vehicle and lock the vehicle.**
- **Never leave children alone in a vehicle, or with access to an unlocked vehicle.**
- **Allowing children to be in a vehicle unattended is dangerous for a number of reasons. A child or others could be seriously or fatally injured. Children should be warned not to touch the parking brake, brake pedal or the gear selector.**
- **Do not leave the key fob in or near the vehicle, or in a location accessible to children, and do not leave the ignition of a vehicle equipped with Keyless Enter-N-Go in the ACC or ON/RUN mode. A child could operate power windows, other controls, or move the vehicle.**

Start the engine with the gear selector in the NEUTRAL or PARK position. Apply the brake before shifting to any driving range.

Normal Starting — Gasoline Engine

NOTE: Normal starting of either a cold or a warm engine is obtained without pumping or pushing the accelerator pedal.

Place your foot on the brake and place the ignition to the START mode and release when the engine starts. If the engine fails to start within 10 seconds:

1. Place the ignition in the OFF mode
2. Wait 10 to 15 seconds
3. Repeat the "Normal Starting" procedure

Tip Start Feature

Place the ignition in the START mode and release it as the starter engages. The starter motor will automatically disengage itself once engine is running. If the engine fails to start, the starter will disengage automatically in 10 seconds. If this occurs:

1. Place the ignition in the OFF mode.
2. Wait 10 to 15 seconds.
3. Repeat the "Normal Starting" procedure.

Extreme Cold Weather (Below –22°F Or –30°C)

To ensure reliable starting at these temperatures, use of an externally powered electric engine block heater (available from your authorized dealer) is recommended.

Extended Park Starting

NOTE: Extended Park condition occurs when the vehicle has not been started or driven for at least 30 days.

1. Install a battery charger or jumper cables to the battery to ensure a full battery charge during the crank cycle.
2. Place the ignition to the START mode and release it when the engine starts.
3. If the engine fails to start within 10 seconds, place the ignition in the OFF mode, wait five seconds to allow the starter to cool, then repeat the Extended Park Starting procedure.
4. If the engine fails to start after eight attempts, allow the starter to cool for at least 10 minutes, then repeat the procedure.

CAUTION!

To prevent damage to the starter, do not crank continuously for more than 10 seconds at a time. Wait 10 to 15 seconds before trying again.

If Engine Fails To Start

WARNING!

- **Never pour fuel or other flammable liquid into the throttle body air inlet opening in an attempt to start the vehicle. This could result in flash fire causing serious personal injury.**
- **Do not attempt to push or tow your vehicle to get it started. Vehicles equipped with an automatic transmission cannot be started this way. Unburned fuel could enter the catalytic converter and once the engine has started, ignite and damage the converter and vehicle.**
- **If the vehicle has a discharged battery, booster cables may be used to obtain a start from a booster battery or the battery in another vehicle. This type of start can be dangerous if done improperly. Refer to "Jump-Starting Procedure" in "In Case Of Emergency" for further information.**

After Starting

The idle speed is controlled automatically, and it will decrease as the engine warms up.

ENGINE BLOCK HEATER — IF EQUIPPED

The engine block heater warms the engine and permits quicker starts in cold weather.

Connect the cord to a 110-115 Volt AC electrical outlet with a grounded, three-wire extension cord.

For ambient temperatures below 0°F (-18°C), the engine block heater is recommended. For ambient temperatures below -20°F (-29°C), the engine block heater is required.

The engine block heater cord is routed under the hood, behind to the driver's side headlamp. Follow the steps below to properly use the engine block heater:

1. Locate the engine block heater cord (behind the driver's side headlamp).
2. Undo the Velcro strap that secures the heater cord in place.
3. Pull the cord to the front of the vehicle and plug it into a grounded, three-wire extension cord.
4. After the vehicle is running, reattach the cord to the Velcro strap and properly stow away behind the driver's side headlamp.

NOTE:

- The engine block heater cord is a factory installed option. If your vehicle is not equipped, heater cords are available from your authorized Mopar dealer.
- The engine block heater will require 110 Volts AC and 6.5 Amps to activate the heater element.
- The engine block heater must be plugged in at least one hour to have an adequate warming effect on the engine.

WARNING!

Remember to disconnect the engine block heater cord before driving. Damage to the 110-115 Volt electrical cord could cause electrocution.

ENGINE BREAK-IN RECOMMENDATIONS

A long break-in period is not required for the engine and drivetrain (transmission and axle) in your vehicle.

Drive moderately during the first 300 miles (500 km). After the initial 60 miles (100 km), speeds up to 50 or 55 mph (80 or 90 km/h) are desirable.

While cruising, brief full-throttle acceleration within the limits of local traffic laws contributes to a good break-in. Wide-open throttle acceleration in low gear can be detrimental and should be avoided.

The engine oil installed in the engine at the factory is a high-quality energy conserving type lubricant. Oil changes should be consistent with anticipated climate conditions under which vehicle operations will occur. For the recommended viscosity and quality grades, refer to "Dealer Service" in "Servicing And Maintenance".

CAUTION!

Never use Non-Detergent Oil or Straight Mineral Oil in the engine or damage may result.

NOTE: A new engine may consume some oil during its first few thousand miles (kilometers) of operation. This should be considered a normal part of the break-in and not interpreted as a problem.

PARKING BRAKE

Electric Park Brake (EPB)

Your vehicle is equipped with an Electric Park Brake System (EPB) that offers simple operation, and some additional features that make the parking brake more convenient and useful.

The parking brake is primarily intended to prevent the vehicle from rolling while parked. Before leaving the vehicle, make sure that the park brake is applied. Also, be certain to leave the transmission in PARK.

You can engage the park brake in two ways:

- Manually, by applying the park brake switch.
- Automatically, by enabling the Auto Park Brake feature in the customer programmable features section of the Uconnect settings.

The park brake switch is located in the center console.

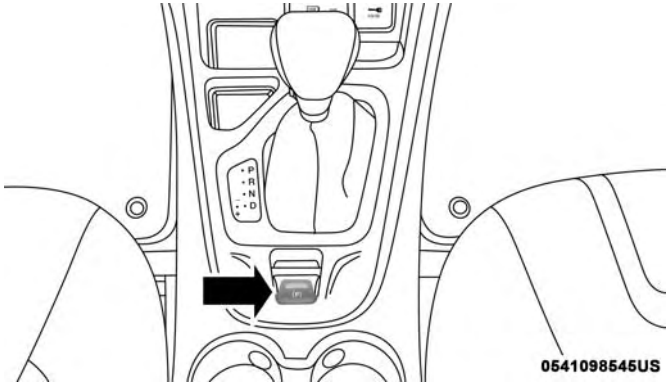

Electric Park Brake Switch

To apply the park brake manually, pull up on the switch momentarily. You may hear a slight whirring sound from the back of the vehicle while the park brake engages. Once the park brake is fully engaged, the BRAKE telltale light in the instrument cluster and an indicator on the switch will illuminate. If your foot is on the brake pedal while you apply the park brake, you may notice a small amount of brake pedal movement. The park brake can be applied even when the ignition switch is OFF but the BRAKE telltale light will not illuminate, however, it can only be released when the ignition is in the ON/RUN mode.

NOTE: The EPB fault light will illuminate if the EPB switch is held for longer than 20 seconds in either the released or applied position. The light will extinguish upon releasing the switch.

If the Auto Park Brake feature is enabled, the parking brake will automatically engage whenever the transmission is placed into PARK, when the ignition is turned OFF. If your foot is on the brake pedal, you may notice a small amount of brake pedal movement while the park brake is engaging.

The park brake will release automatically when the ignition is ON, the transmission is in DRIVE or REVERSE, the driver seat belt is buckled, and an attempt is made to drive away.

To release the park brake manually, the ignition switch must be in the ON/RUN mode. Put your foot on the brake pedal, then push the park brake switch down momentarily. You may hear a slight whirring sound from the back of the vehicle while the parking brake disengages. You may also notice a small amount of movement in the brake pedal. Once the park brake is fully disengaged, The BRAKE telltale light in the instrument cluster and the LED indicator on the switch will extinguish.

NOTE: When parking on a hill, it is important to turn the front wheels toward the curb on a downhill grade and away from the curb on an uphill grade. Apply the park brake before placing the gear selector in PARK, otherwise the load on the transmission locking mechanism may make it difficult to move the gear selector out of PARK. The parking brake should always be applied whenever the driver is not in the vehicle.

WARNING!

- **Never use the PARK position as a substitute for the parking brake. Always apply the parking brake fully when parked to guard against vehicle movement and possible injury or damage.**
- **When exiting the vehicle, always remove the key fob from the ignition and lock your vehicle.**
- **Never leave children alone in a vehicle, or with access to an unlocked vehicle. Allowing children to be in a vehicle unattended is dangerous for a number of reasons. A child or others could be seriously or fatally injured. Children should be warned not to touch the parking brake, brake pedal or the gear selector.**

(Continued)

WARNING! *(Continued)*

- **Do not leave the key fob in or near the vehicle, or in a location accessible to children, and do not leave a vehicle equipped with Keyless Enter-N-Go in the ACC or ON/RUN mode. A child could operate power windows, other controls, or move the vehicle.**
- **Be sure the parking brake is fully disengaged before driving; failure to do so can lead to brake failure and a collision.**
- **Always fully apply the parking brake when leaving your vehicle, or it may roll and cause damage or injury. Also be certain to leave the transmission in PARK. Failure to do so may allow the vehicle to roll and cause damage or injury.**

CAUTION!

If the Brake System Warning Light remains on with the parking brake released, a brake system malfunction is indicated. Have the brake system serviced by an authorized dealer immediately.

If exceptional circumstances should make it necessary to engage the park brake while the vehicle is in motion, maintain upward pressure on the electric park brake

switch for as long as engagement is desired. The BRAKE telltale light will illuminate, and a continuous chime will sound. The rear stop lamps will also be illuminated automatically while the vehicle remains in motion.

To disengage the park brake while the vehicle is in motion, release the switch. If the vehicle is brought to a complete stop using the parking brake, when the vehicle reaches approximately 3 mph, (5 km/h) the parking brake will remain engaged.

WARNING!

Driving the vehicle with the parking brake engaged, or repeated use of the parking brake to slow the vehicle may cause serious damage to the brake system. Be sure the parking brake is fully disengaged before driving; failure to do so can lead to brake failure and a collision.

In the unlikely event of a malfunction of the Electric Park Brake system, a yellow EPB fault light will illuminate. This may be accompanied by the BRAKE telltale light flashing. In this event, urgent service of the electric park brake system is required. Do not rely on the parking brake to hold the vehicle stationary.

Auto Park Brake

The electric park brake can be programmed to be applied automatically whenever the vehicle is at a standstill and the automatic transmission is placed in PARK, whenever the ignition is turned “OFF”. Auto Park Brake is enabled and disabled by customer selection through the customer programmable features section of the Uconnect Settings.

Any single auto park brake application can be bypassed by pushing the EPB switch to the release position while the transmission is placed in PARK.

SafeHold

SafeHold is a safety feature of the Electric Park Brake System that will engage the park brake automatically if the vehicle is left unsecured while the ignition is in ON/RUN.

For automatic transmissions, the park brake will automatically engage if all of the following conditions are met:

- The vehicle is at a standstill.
- There is no attempt to depress the brake pedal or accelerator pedal.
- The seat belt is unbuckled.
- The driver door is open.

SafeHold can be temporarily bypassed by pushing the Electric Park Brake Switch while the driver door is open. Once manually bypassed, SafeHold will be enabled again once the vehicle reaches 12 mph (20 km/h) or the ignition is turned to the OFF position and back to ON again.

Brake Service Mode

We recommend having your brakes serviced by your authorized dealer. You should only make repairs for which you have the knowledge and the right equipment. You should only enter Brake Service Mode during brake service.

When servicing your rear brakes, it may be necessary for you or your technician to push the rear piston into the rear caliper bore. With the electric park brake system, this can only be done after retracting the Electric Park Brake actuator. Fortunately, actuator retraction can be done easily by entering the Brake Service Mode through the Uconnect Settings in your vehicle. This menu based system will guide you through the steps necessary to retract the EPB actuator in order to perform rear brake service.

Service Mode has requirements that must be met in order to be activated:

- The vehicle must be at a standstill.
- The park brake must be unapplied.
- The transmission must be in PARK or NEUTRAL.

While in service mode, the Electric Park Brake fault lamp will flash continuously while the ignition is ON.

When brake service work is complete, the following steps must be followed to reset the park brake system to normal operation:

- Ensure the vehicle is at a standstill.
- Press the brake pedal with moderate force.
- Apply the Electric Park Brake Switch.

WARNING!

You can be badly injured working on or around a motor vehicle. Do only that service work for which you have the knowledge and the right equipment. If you have any doubt about your ability to perform a service job, take your vehicle to a competent mechanic.

AUTOMATIC TRANSMISSION

WARNING!

- It is dangerous to shift out of PARK or NEUTRAL if the engine speed is higher than idle speed. If your foot is not firmly pressing the brake pedal, the vehicle could accelerate quickly forward or in reverse. You could lose control of the vehicle and hit someone or something. Only shift into gear when the engine is idling normally and your foot is firmly pressing the brake pedal.
- Unintended movement of a vehicle could injure those in or near the vehicle. As with all vehicles, you should never exit a vehicle while the engine is running. Before exiting a vehicle, always come to a complete stop, then apply the parking brake, shift the transmission into PARK, turn the engine OFF, and remove the key fob. When the ignition is in the LOCK/OFF (key removal) position, (or, with Keyless Enter-N-Go, when the ignition is in the OFF mode) the transmission is locked in PARK, securing the vehicle against unwanted movement.

(Continued)

WARNING! *(Continued)*

- When leaving the vehicle, always make sure the ignition is in the OFF mode, remove the key fob from the vehicle, and lock the vehicle.
- Never use the PARK position as a substitute for the parking brake. Always apply the parking brake fully when exiting the vehicle to guard against vehicle movement and possible injury or damage.
- Your vehicle could move and injure you and others if it is not in PARK. Check by trying to move the gear selector out of PARK with the brake pedal released. Make sure the transmission is in PARK before exiting the vehicle.
- Never leave children alone in a vehicle, or with access to an unlocked vehicle. Allowing children to be in a vehicle unattended is dangerous for a number of reasons. A child or others could be seriously or fatally injured. Children should be warned not to touch the parking brake, brake pedal or the transmission gear selector.
- Do not leave the key fob in or near the vehicle (or in a location accessible to children), and do not leave the ignition (in a vehicle equipped with Keyless

(Continued)

WARNING! *(Continued)*

Enter-N-Go) in the ACC or ON/RUN mode. A child could operate power windows, other controls, or move the vehicle.

CAUTION!

Damage to the transmission may occur if the following precautions are not observed:

- **Shift into or out of PARK or REVERSE only after the vehicle has come to a complete stop.**
- **Do not shift between PARK, REVERSE, NEUTRAL, or DRIVE when the engine is above idle speed.**
- **Before shifting into any gear, make sure your foot is firmly pressing the brake pedal.**

NOTE: You must press and hold the brake pedal while shifting out of PARK.

Key Ignition Park Interlock

This vehicle is equipped with a Key Ignition Park Interlock which requires the transmission to be in PARK before the ignition can be turned to the LOCK/OFF (key removal) position. The key fob can only be removed from the ignition when the ignition is in the LOCK/OFF position, and the transmission is locked in PARK whenever the ignition is in the LOCK/OFF position.

Brake/Transmission Shift Interlock System

This vehicle is equipped with a Brake Transmission Shift Interlock system (BTSI) that holds the transmission gear selector in PARK unless the brakes are applied. To shift the transmission out of PARK, the ignition must be in the ON/RUN mode (engine running or not) and the brake pedal must be pressed.

The brake pedal must also be pressed to shift from NEUTRAL into DRIVE or REVERSE when the vehicle is stopped or moving at low speeds.

Nine-Speed Automatic Transmission

The transmission gear range (PRND) is displayed both beside the gear selector and in the instrument cluster. To select a gear range, press the lock button on the gear selector and move the selector rearward or forward. You must also press the brake pedal to shift the transmission out of PARK (or NEUTRAL, when the vehicle is stopped or moving at low speeds). Select the DRIVE range for normal driving.

NOTE: In the event of a mismatch between the gear selector position and the actual transmission gear (for example, driver selects REVERSE while driving forward), the position indicator will blink continuously until the selector is returned to the proper position, or the requested shift can be completed.

The electronically-controlled transmission adapts its shift schedule based on driver inputs, along with environmental and road conditions. The transmission electronics are self-calibrating; therefore, the first few shifts on a new vehicle may be somewhat abrupt. This is a normal condition, and precision shifts will develop within a few hundred miles (kilometers).

The nine-speed transmission has been developed to meet the needs of current and future FWD/AWD vehicles. Software and calibration is refined to optimize the customer's driving experience and fuel economy. By design, some vehicle and driveline combinations utilize 9th gear only in very specific driving situations and conditions.

Only shift from DRIVE to PARK or REVERSE when the accelerator pedal is released and the vehicle is stopped. Be sure to keep your foot on the brake pedal when shifting between these gears.

The transmission gear selector has PARK, REVERSE, NEUTRAL, DRIVE, and Electronic Range Select (ERS) shift positions. Manual downshifts can be made using the ERS shift control. Moving the gear selector into the ERS (-/+) position (beside the DRIVE position) activates ERS mode, displays the current gear in the instrument cluster, and prevents automatic upshifts beyond this gear. In ERS mode, toggling the gear selector forward (-) or rearward (+) will change the highest available gear. Refer to "Electronic Range Select (ERS) Operation" in this section for further information.

NOTE: If the gear selector cannot be moved to the PARK, REVERSE, or NEUTRAL position (when pushed forward) it is probably in the ERS (+/-) position (beside the DRIVE position). In ERS mode, the transmission gear limit (1, 2, 3, etc.) is displayed in the instrument cluster. Move the gear selector to the right (into the DRIVE [D] position) for access to PARK, REVERSE, and NEUTRAL.

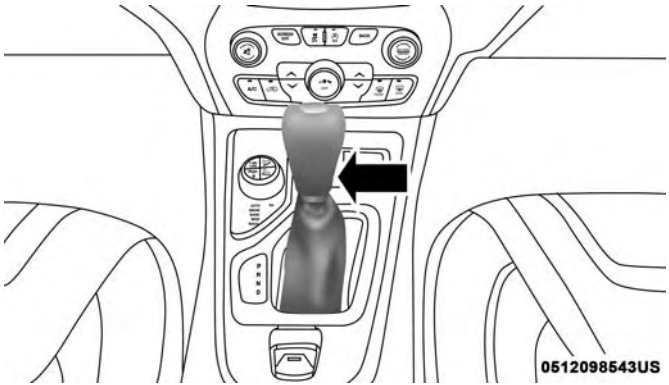

Gear Selector

Gear Ranges

Do not depress the accelerator pedal when shifting from PARK or NEUTRAL into another gear range.

NOTE: After selecting any gear range, wait a moment to allow the selected gear to engage before accelerating. This is especially important when the engine is cold.

PARK (P)

This range supplements the parking brake by locking the transmission. The engine can be started in this range. Never attempt to use PARK while the vehicle is in motion. Apply the parking brake when exiting the vehicle in this range.

When parking on a level surface, you may shift the transmission into PARK first, and then apply the parking brake.

When parking on a hill, apply the parking brake before shifting the transmission to PARK, otherwise the load on the transmission locking mechanism may make it difficult to move the gear selector out of PARK. As an added precaution, turn the front wheels toward the curb on a downhill grade and away from the curb on an uphill grade.

When exiting the vehicle, always:

- Apply the parking brake.
- Shift the transmission into PARK.
- Turn the engine OFF.
- Remove the key fob.

WARNING!

- Never use the PARK position as a substitute for the parking brake. Always apply the parking brake fully when exiting the vehicle to guard against vehicle movement and possible injury or damage.
- Your vehicle could move and injure you and others if it is not in PARK. Check by trying to move the gear selector out of PARK with the brake pedal released. Make sure the transmission is in PARK before exiting the vehicle.
- It is dangerous to shift out of PARK or NEUTRAL if the engine speed is higher than idle speed. If your foot is not firmly pressing the brake pedal, the vehicle could accelerate quickly forward or in reverse. You could lose control of the vehicle and hit someone or something. Only shift into gear when the engine is idling normally and your foot is firmly pressing the brake pedal.
- Unintended movement of a vehicle could injure those in or near the vehicle. As with all vehicles, you should never exit a vehicle while the engine is running. Before exiting a vehicle, always come to a complete stop, then apply the parking brake, shift

(Continued)

WARNING! *(Continued)*

the transmission into PARK, turn the engine OFF, and remove the key fob. When the ignition is in the LOCK/OFF (key removal) position (or, with Keyless Enter-N-Go, when the ignition is in the OFF mode), the transmission is locked in PARK, securing the vehicle against unwanted movement.
- When leaving the vehicle, always make sure the ignition is in the OFF mode, remove the key fob from the vehicle, and lock the vehicle.
- Never leave children alone in a vehicle, or with access to an unlocked vehicle. Allowing children to be in a vehicle unattended is dangerous for a number of reasons. A child or others could be seriously or fatally injured. Children should be warned not to touch the parking brake, brake pedal or the transmission gear selector.
- Do not leave the key fob in or near the vehicle (or in a location accessible to children), and do not leave the ignition (in a vehicle equipped with Keyless Enter-N-Go) in the ACC or ON/RUN mode. A child could operate power windows, other controls, or move the vehicle.

CAUTION!

- **Before moving the transmission gear selector out of PARK, you must turn the ignition to the ON/RUN mode, and also press the brake pedal. Otherwise, damage to the gear selector could result.**
- **DO NOT race the engine when shifting from PARK or NEUTRAL into another gear range, as this can damage the drivetrain.**

The following indicators should be used to ensure that you have properly engaged the transmission into the PARK position:

- When shifting into PARK, push the lock button on the gear selector and firmly move the selector all the way forward until it stops and is fully seated.
- Look at the transmission gear position display and verify that it indicates the PARK position (P).
- With brake pedal released, verify that the gear selector will not move out of PARK.

REVERSE (R)

This range is for moving the vehicle backward. Shift into REVERSE only after the vehicle has come to a complete stop.

NEUTRAL (N)

Use this range when the vehicle is standing for prolonged periods with the engine running. The engine may be started in this range. Apply the parking brake and shift the transmission into PARK if you must exit the vehicle.

WARNING!

Do not coast in NEUTRAL and never turn off the ignition to coast down a hill. These are unsafe practices that limit your response to changing traffic or road conditions. You might lose control of the vehicle and have a collision.

CAUTION!

Towing the vehicle, coasting, or driving for any other reason with the transmission in NEUTRAL can cause severe transmission damage.

(Continued)

CAUTION! ***(Continued)***

Refer to "Recreational Towing" in "Starting And Operating" and "Towing A Disabled Vehicle" in "In Case Of Emergency" for further information.

DRIVE (D)

This range should be used for most city and highway driving. It provides the smoothest upshifts and downshifts, and the best fuel economy. The transmission automatically upshifts through all forward gears. The DRIVE position provides optimum driving characteristics under all normal operating conditions.

When frequent transmission shifting occurs (such as when operating the vehicle under heavy loading conditions, in hilly terrain, traveling into strong head winds, or while towing a heavy trailer), use the Electronic Range Select (ERS) shift control (refer to "Electronic Range Select (ERS) Operation" in this section for further information) to select a lower gear range. Under these conditions, using a lower gear range will improve performance and extend transmission life by reducing excessive shifting and heat buildup.

If the transmission temperature exceeds normal operating limits, the transmission controller may modify the transmission shift schedule, reduce engine torque, and/or expand the range of torque converter clutch engagement. This is done to prevent transmission damage due to overheating.

If the transmission becomes extremely hot, the "Transmission Temperature Warning Light" may illuminate and the transmission may operate differently until the transmission cools down.

During cold temperatures, transmission operation may be modified depending on engine and transmission temperature as well as vehicle speed. This feature improves warm up time of the engine and transmission to achieve maximum efficiency. Engagement of the torque converter clutch, and shifts into 8th or 9th gear, are inhibited until the transmission fluid is warm (refer to the note within the "Torque Converter Clutch" topic in this section). Normal operation will resume once the transmission temperature has risen to a suitable level.

SPORT — If Equipped

This mode alters the transmission's automatic shift schedule for sportier driving. Upshift speeds are increased to make full use of available engine power.

SPORT mode is activated using the rotary switch on the center console. Refer to "Selec-Terrain" in this section for further information.

Transmission Limp Home Mode

Transmission function is monitored electronically for abnormal conditions. If a condition is detected that could result in transmission damage, Transmission Limp Home Mode is activated. In this mode, the transmission may operate only in a fixed gear, or may remain in NEUTRAL. The Malfunction Indicator Light (MIL) may be illuminated. Limp Home Mode may allow the vehicle to be driven to an authorized dealer for service without damaging the transmission.

In the event of a momentary problem, the transmission can be reset to regain all forward gears by performing the following steps:

1. Stop the vehicle.
2. Shift the transmission into PARK.
3. Turn the ignition to the OFF position.
4. Wait approximately 10 seconds.
5. Restart the engine.
6. Shift into the desired gear range. If the problem is no longer detected, the transmission will return to normal operation.

NOTE: Even if the transmission can be reset, we recommend that you visit your authorized dealer at your earliest possible convenience. Your authorized dealer has diagnostic equipment to assess the condition of your transmission. If the transmission cannot be reset, authorized dealer service is required.

Electronic Range Select (ERS) Operation

The Electronic Range Select (ERS) shift control allows the driver to limit the highest available gear. For example, if you set the transmission gear limit to 5 (fifth gear), the transmission will not shift above fifth gear, but will shift through the lower gears normally.

You can switch between DRIVE and ERS mode at any vehicle speed. When the gear selector is in the DRIVE position, the transmission will operate automatically, shifting between all available gears.

Moving the gear selector to the ERS position (beside DRIVE) will activate ERS mode, display the current gear in the instrument cluster, and set that gear as the top available gear. Once in ERS mode, moving the gear selector forward (-) or rearward (+) will change the top available gear.

To exit ERS mode, simply return the gear selector to the DRIVE position.

WARNING!

Do not downshift for additional engine braking on a slippery surface. The drive wheels could lose their grip and the vehicle could skid, causing a collision or personal injury.

NOTE: To select the proper gear position for maximum deceleration (engine braking), move the gear selector into the ERS position, then simply press and hold it forward (-). The transmission will shift to the range from which the vehicle can best be slowed down.

Torque Converter Clutch

A feature designed to improve fuel economy has been included in the automatic transmission on your vehicle. A clutch within the torque converter engages automatically at calibrated speeds. This may result in a slightly different feeling or response during normal operation in the upper gears. When the vehicle speed drops or during some accelerations, the clutch automatically disengages.

NOTE: The torque converter clutch will not engage until the transmission fluid is warm (usually after 1 to 3 miles [2 to 5 km] of driving). Because the engine speed is higher when the torque converter clutch is not engaged, it may seem as if the transmission is not shifting properly when cold. This is normal. The torque converter clutch will function normally once the transmission is sufficiently warm.

FOUR-WHEEL DRIVE OPERATION

1-Speed Four-Wheel Drive (4X4) — If Equipped

This feature provides on-demand four-wheel drive (4X4). The system is automatic with no driver inputs or additional driving skills required. Under normal driving conditions, the front wheels provide most of the traction. If the front wheels begin to lose traction, power is shifted automatically to the rear wheels. The greater the front wheel traction loss, the greater the power transfer to the rear wheels.

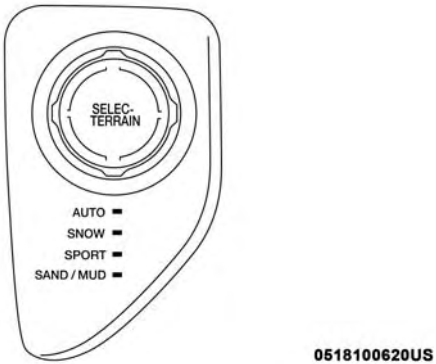

1-Speed 4X4 Switch

Additionally, on dry pavement under heavy throttle input (where one may have no wheel spin), torque will be sent to the rear in a pre-emptive effort to improve vehicle launch and performance characteristics.

CAUTION!
All wheels must have the same size and type tires. Unequal tire sizes must not be used. Unequal tire size may cause failure of the power transfer unit.

2-Speed Four-Wheel Drive (4x4) — If Equipped

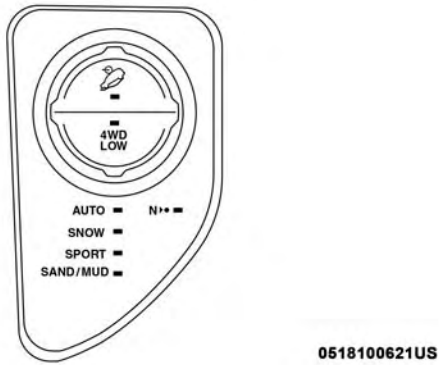

2-Speed 4x4 Switch

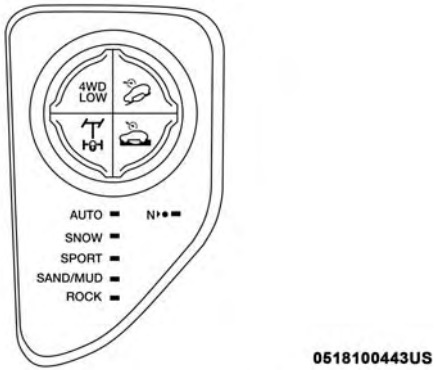

2-Speed 4x4 Switch (with Rear Lock)

The Four-Wheel Drive is fully automatic in the normal driving mode. The Selec-Terrain buttons provide three selectable mode positions:

- 4WD LOW
- REAR LOCK (If Equipped)
- NEUTRAL

When additional traction is required, the 4WD LOW range position can be used to provide an additional gear reduction which allows for increased torque to be delivered to both the front and rear wheels. 4WD LOW is intended for loose, slippery road surfaces only. Driving in 4WD LOW on dry, hard-surfaced roads may cause increased tire wear and damage to driveline components.

When operating your vehicle in 4WD LOW, the engine speed is approximately three times that of the normal driving mode at a given road speed. Take care not to overspeed the engine and do not exceed 25 mph (40 km/h).

Proper operation of four-wheel drive vehicles depends on tires of equal size, type, and circumference on each wheel. Any difference will adversely affect shifting and cause damage to the driveline components.

Because four-wheel drive provides improved traction, there is a tendency to exceed safe turning and stopping speeds. Do not go faster than road conditions permit.

Shift Positions

For additional information on the appropriate use of each 4WD system mode position, see the information below:

NEUTRAL

This range disengages the driveline from the powertrain. It is to be used for flat towing behind another vehicle. Refer to “Recreational Towing” in “Starting And Operating” for further information.

WARNING!

You or others could be injured or killed if you leave the vehicle unattended with the power transfer unit in the NEUTRAL (N) position without first fully engaging the parking brake. The NEUTRAL (N) position disengages both the front and rear driveshafts from the powertrain and will allow the vehicle to roll, even if the transmission is in PARK. The parking brake should always be applied when the driver is not in the vehicle.

4WD LOW

This range is for low speed four-wheel drive. It provides an additional gear reduction which allows for increased torque to be delivered to both the front and rear wheels while providing maximum pulling power for loose, slippery road surfaces only. Do not exceed 25 mph (40 km/h).

NOTE: Refer to "Selec-Terrain — If Equipped" for further information on the various positions and their intended usages.

Shifting Procedures

Shifting Into 4X4 LOW

With the vehicle at speeds of 0 to 3 mph (0 to 5 km/h), the ignition in the ON mode and the engine running, shift the transmission into NEUTRAL, and push the "4WD LOW" button once. The "4WD LOW" indicator light in the instrument cluster will begin to flash and remain on solid when the shift is complete.

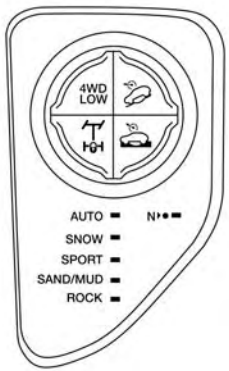

Selec-Terrain Switch

NOTE: If shift conditions/interlocks are not met, a message will flash from the instrument cluster display with instructions on how to complete the requested shift. Refer to "Instrument Cluster Display" in "Getting To know Your Instrument Panel" for further information.

Shifting Out Of 4X4 LOW

With the vehicle at speeds of 0 to 3 mph (0 to 5 km/h), the ignition in the ON mode and the engine running, shift the transmission into NEUTRAL, and push the "4WD LOW" button once. The "4WD LOW" indicator light in the instrument cluster will flash and go out when the shift is complete.

NOTE:

- If shift conditions/interlocks are not met, a message will flash from the instrument cluster display with instructions on how to complete the requested shift. Refer to "Instrument Cluster Display" in "Getting To Know Your Instrument Panel" for further information.
- Shifting into or out of 4WD LOW is possible with the vehicle completely stopped; however, difficulty may occur due to the mating clutch teeth not being properly aligned. Several attempts may be required for clutch teeth alignment and shift completion to occur. The preferred method is with the vehicle rolling 0 to 3 mph (0 to 5 km/h). If the vehicle is moving faster than 3 mph (5 km/h), the 4WD system will not allow the shift.

NEUTRAL Shift Procedure

WARNING!

You or others could be injured or killed if you leave the vehicle unattended with the power transfer unit in the NEUTRAL (N) position without first fully engaging the parking brake. The NEUTRAL (N) position disengages both the front and rear driveshafts from the

(Continued)

WARNING! ***(Continued)***

powertrain and will allow the vehicle to roll, even if the transmission is in PARK. The parking brake should always be applied when the driver is not in the vehicle.

1. Bring the vehicle to a complete stop and shift the transmission to PARK.
2. Turn the engine OFF.
3. Turn the ignition to the ON/RUN mode, but do not start the engine.
4. Press and hold the brake pedal.
5. Shift the transmission into NEUTRAL.
6. Using a ballpoint pen or similar object, push and hold the recessed power transfer unit NEUTRAL (N) button (located by the selector switch) for four seconds. The light behind the NEUTRAL (N) symbol will blink, indicating shift in progress. The light will stop blinking (stay on solid) when the shift to NEUTRAL (N) is complete.

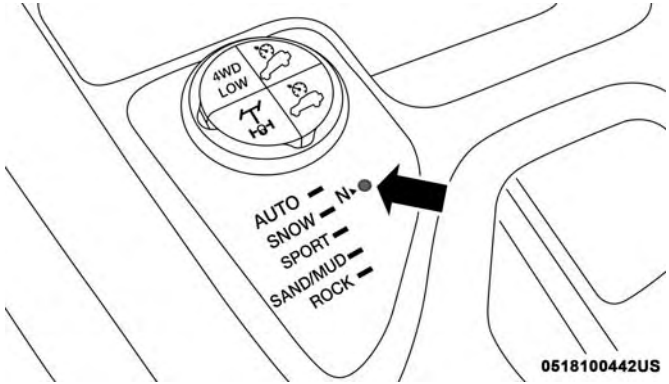

Neutral Button

7. After the shift is completed and the NEUTRAL (N) light stays on, release the NEUTRAL (N) button.
8. Start the engine.
9. Release the parking brake.
10. Shift the transmission into REVERSE.
11. Release the brake pedal for five seconds and ensure that there is no vehicle movement.
12. Shift the transmission to NEUTRAL.
13. Apply the parking brake.

14. Shift the transmission into PARK, turn the engine OFF, and remove the key kob.

Repeat steps 1-7 to shift out of NEUTRAL.

NOTE: When towing this vehicle behind another vehicle, the Mopar flat tow wiring kit must be used, and the parking brake must be released. Refer to "Recreational Towing" in "Starting and Operating" for further instructions.

Rear Electronic Locker (E-Locker) System — If Equipped

The Rear E-Locker System features a mechanical locking rear differential to provide better traction in the 4WD LOW position. The "REAR LOCK" button is on the Selec-Terrain Knob.

Activating The Rear E-Locker

To activate the Rear E-Locker System, the following conditions must be met:

1. The 4WD system must be in 4WD LOW.
2. The ignition in the ON mode and the engine running.
3. Vehicle speed must be below 15 MPH (24 km/h).
4. To engage Rear E-Locker, push the REAR LOCK button once.

Deactivating The Rear E-Locker System

To deactivate the Rear E-Locker System, the following conditions must be met:

1. Rear E-Locker must be engaged, and the REAR LOCK indicator light on.
2. The ignition in the ON mode and the engine running.
3. To disengage Rear E-Locker, push the REAR LOCK button once.

NOTE:

- It may also be necessary to drive slowly steering back and forth to complete engagement and disengagement of the E-Locker.
- When engaging Rear E-Locker, the indicator lights in the instrument cluster and on the REAR LOCK button will begin to flash. When the shift is complete the REAR LOCK indicator lights will remain on.
- When disengaging Rear E-Locker, the indicator lights in the instrument cluster and on the REAR LOCK button will begin to flash. When the shift is complete the REAR LOCK indicator lights will remain off.
- Shifting into or out of Rear E-Locker is possible with the vehicle completely stopped; however, difficulty may

occur due to the mating clutch teeth not being properly aligned. Several attempts may be required for clutch teeth alignment and shift completion to occur. The preferred method is for the vehicle to be rolling, below 15 MPH (24 km/h), while including right and left steering maneuvers to allow for the clutch teeth to align.

- The Rear E-Locker System must be disengaged prior to taking the vehicle out of 4WD LOW range. If 4WD LOW shift conditions/interlocks are not met, a message will flash from the instrument cluster display with instructions on how to complete the requested shift.

SELEC-TERRAIN

Description

Selec-Terrain combines the capabilities of the vehicle control systems, along with driver input, to provide the best performance for all terrains.

Rotate the Selec-Terrain knob to select the desired mode.

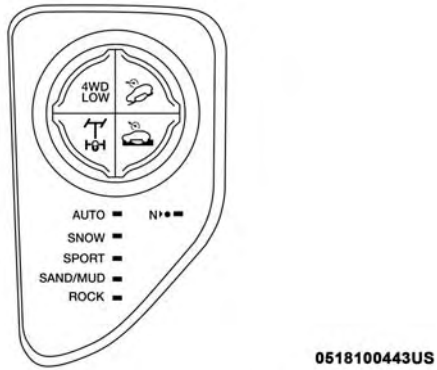

Selec-Terrain Switch

Selec-Terrain offers the following modes:

- **Auto** — Fully automatic full time four-wheel drive operation can be used on and off road. Balances traction with seamless steering feel to provide improved handling and acceleration over two-wheel drive vehicles.
- **Snow** — Tuning set for additional stability in inclement weather. Use on and off road on loose traction surfaces such as snow. When in SNOW mode (depending on certain operating conditions), the transmission may use second gear (rather than first gear) during launches, to minimize wheel slippage.

- **Sport** — This mode alters the transmission's automatic shift schedule for sportier driving. Upshift speeds are increased to make full use of available engine power.

NOTE: SPORT mode is not available when 4WD LOW is selected.

- **Sand/Mud** — Off-road calibration for use on low traction surfaces such as mud, sand, or wet grass. Driveline is maximized for traction. Some binding may be felt on less forgiving surfaces. The electronic brake controls are set to limit traction control management of throttle and wheel spin.
- **Rock** — Off-road calibration only available in 4WD LOW range. Traction based tuning with improved steerability for use on high traction off-road surfaces. Use for low speed obstacles such as large rocks, deep ruts, etc.

NOTE:

- Rock mode is only available on the vehicles equipped with the Off-Road package.
- Activate the Hill Descent Control or Selec Speed Control for steep downhill control. See "Electronic Brake Control System" in "Safety" for further information.

Instrument Cluster Display Messages

When the appropriate conditions exist, a message will appear in the instrument cluster. Refer to "Instrument Cluster Display" in "Getting To Know Your Instrument Panel" for further information.

POWER STEERING

The electric power steering system will give you good vehicle response and increased ease of maneuverability in tight spaces. The system will vary its assist to provide light efforts while parking and good feel while driving. If the electric steering system experiences a fault that reduces assist or prevents the vehicle from providing assist, you will still have the ability to steer the vehicle manually.

WARNING!

Continued operation with reduced assist could pose a safety risk to yourself and others. Service should be obtained as soon as possible.

If the "SERVICE POWER STEERING" OR "POWER STEERING ASSIST OFF - SERVICE SYSTEM" message and a steering wheel icon are displayed on the instrument cluster display screen, it indicates that the vehicle needs to be taken to the dealer for service. It is likely the vehicle has lost power steering assistance. Refer to "Instrument Cluster Display" in "Getting To Know Your Instrument Panel" for further information.

If the "POWER STEERING SYSTEM HOT - PERFORMANCE MAY BE LIMITED" message and an icon are displayed on the instrument cluster display screen, it indicates that extreme steering maneuvers may have occurred, which caused an over temperature condition in the power steering system. You will lose power steering assistance momentarily until the over temperature condition no longer exists. Once driving conditions are safe, then pull over and let vehicle idle for a few moments until the light turns off. Refer to "Instrument Cluster Display" in "Getting To Know Your Instrument Panel" for further information.

NOTE:

- Even if the power steering assistance is no longer operational, it is still possible to steer the vehicle. Under these conditions there will be a substantial increase in steering effort, especially at low speeds and during parking maneuvers.
- If the condition persists, see your authorized dealer for service.

STOP/START SYSTEM — IF EQUIPPED

The Stop/Start function was developed to reduce fuel consumption. The system will stop the engine automatically during a vehicle stop if the required conditions are met. Releasing the brake pedal or pressing the accelerator pedal will automatically restart the engine.

Automatic Mode

The Stop/Start feature is enabled after every normal customer engine start. At that time, the system will go into STOP/START READY and if all other conditions are met, can go into a STOP/START AUTOSTOP ACTIVE "Autostop" mode.

To Activate The Autostop Mode, The Following Must Occur:

- The system must be in STOP/START READY state. A STOP/START READY message will be displayed in the instrument cluster display within the Stop/Start section. Refer to "Instrument Cluster Display" in "Getting To Know Your Instrument Panel" for further information.
- The vehicle must be completely stopped.
- The gear selector must be in a forward gear and the brake pedal depressed.

The engine will shut down, the tachometer will move to the zero position and the Stop/Start telltale will illuminate indicating you are in Autostop. Customer settings will be maintained upon return to an engine running condition.

Possible Reasons The Engine Does Not Autostop

Prior to engine shut down, the system will check many safety and comfort conditions to see if they are fulfilled. Detailed information about the operation of the Stop/Start system may be viewed in the instrument cluster display Stop/Start Screen. In the following situations the engine will not stop:

- Driver's seat belt is not buckled.
- Driver's door is not closed.
- Battery temperature is too warm or cold.
- Battery charge is low.
- The vehicle is on a steep grade.
- Cabin heating or cooling is in process and an acceptable cabin temperature has not been achieved.
- HVAC is set to full defrost mode at a high blower speed.
- HVAC set to MAX A/C.
- Engine has not reached normal operating temperature.
- The transmission is not in a forward or reverse gear.
- Hood is open.
- Vehicle is in 4LO transfer case mode (if equipped with 4WD).
- Brake pedal is not pressed with sufficient pressure with vehicle in DRIVE position.

Other Factors Which Can Inhibit Autostop Include:

- Accelerator pedal input.
- Engine temp too high.
- 5 mph threshold not achieved from previous AUTOSTOP.

- Steering angle beyond threshold.
- ACC is on and speed is set.

It may be possible for the vehicle to be driven several times without the STOP/START system going into a STOP/START READY state under more extreme conditions of the items listed above.

To Start The Engine While In Autostop Mode

While in a forward gear, the engine will start when the brake pedal is released or the throttle pedal is depressed. The transmission will automatically re-engage upon engine restart.

Conditions That Will Cause The Engine To Start Automatically While In Autostop Mode:

- The transmission gear selector is moved out of DRIVE except in the PARK position.
- To maintain cabin temperature comfort.
- HVAC is set to full defrost mode.
- HVAC system temperature or fan speed is manually adjusted.
- Battery voltage drops too low.
- Low brake vacuum (e.g. after several brake pedal applications).
- STOP/START OFF switch is pushed.
- A STOP/START system error occurs.
- 4WD system is put into 4LO mode (if equipped with 4WD).

Conditions That Force An Application Of The Electric Park Brake While In Autostop Mode:

- The driver's door is open and brake pedal released.
- The driver's door is open and the driver's seat belt is unbuckled.
- The engine hood has been opened.
- A STOP/START system error occurs.

If the Electric Park Brake is applied with the engine off, the engine may require a manual restart and the electric park brake may require a manual release (depress brake pedal and push Electric Park Brake switch). Refer to "Instrument Cluster Display" in "Getting To Know Your Instrument Panel" for further information.

To Manually Turn Off The Stop/Start System

1. Push the STOP/START Off switch (located on the switch bank). The light on the switch will illuminate.

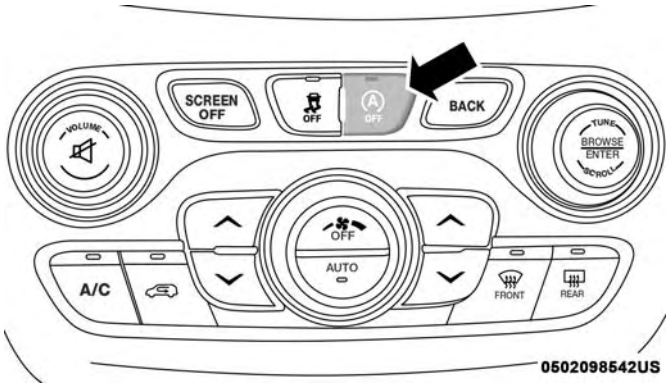

STOP/START OFF Switch

2. The "STOP/START OFF" message will appear in the instrument cluster display. Refer to "Instrument Cluster Display" in "Getting To Know Your Instrument Panel" for further information.

3. At the next vehicle stop (after turning off the STOP/START system), the engine will not be stopped.

4. The STOP/START system will reset itself back to the ON mode every time the ignition is turned off and back on.

To Manually Turn On The Stop/Start System

Push the STOP/START Off switch (located on the switch bank). The light on the switch will turn off.

System Malfunction

If there is a malfunction in the STOP/START system, the system will not shut down the engine. A "SERVICE STOP/START SYSTEM" message will appear in the instrument cluster display. Refer to "Instrument Cluster Display" in "Getting To Know Your Instrument Panel" for further information.

If the "SERVICE STOP/START SYSTEM" message appears in the instrument cluster display, have the system checked by your authorized dealer.

SPEED CONTROL — IF EQUIPPED

When engaged, the Speed Control takes over accelerator operations at speeds greater than 25 mph (40 km/h).

The Speed Control buttons are located on the right side of the steering wheel.

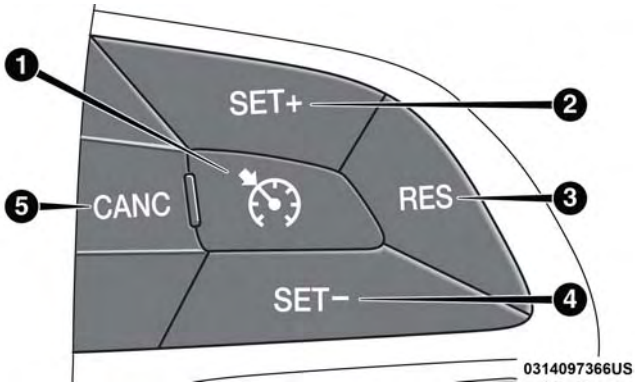

Speed Control Buttons

1 — On/Off
2 — SET+/Accel
3 — RES/Resume
4 — SET-/Decel
5 — CANC/Cancel

NOTE: In order to ensure proper operation, the Speed Control System has been designed to shut down if multiple speed control functions are operated at the same time. If this occurs, the Speed Control System can be reactivated by pushing the Speed Control on/off button and resetting the desired vehicle set speed.

WARNING!

Speed Control can be dangerous where the system cannot maintain a constant speed. Your vehicle could go too fast for the conditions, and you could lose control and have an accident. Do not use Speed Control in heavy traffic or on roads that are winding, icy, snow-covered or slippery.

To Activate

Push the on/off button to activate the Speed Control. The cruise indicator light in the instrument cluster display will illuminate. To turn the system off, push the on/off button a second time. The cruise indicator light will turn off. The system should be turned off when not in use.

WARNING!

Leaving the Speed Control system on when not in use is dangerous. You could accidentally set the system or cause it to go faster than you want. You could lose control and have an accident. Always leave the system off when you are not using it.

To Set A Desired Speed

Turn the Speed Control on.

NOTE: The vehicle should be traveling at a steady speed and on level ground before pushing the SET (+) or SET (-) button.

When the vehicle has reached the desired speed, push the SET (+) or SET (-) button and release. Release the accelerator and the vehicle will operate at the selected speed.

To Vary The Speed Setting

To Increase Speed

When the Speed Control is set, you can increase speed by pushing the SET **(+)** button.

The driver's preferred units can be selected through the Uconnect system if equipped. Refer to "Uconnect Settings" in "Multimedia" for more information. The speed increment shown is dependant on the chosen speed unit of U.S. (mph) or Metric (km/h):

U.S. Speed (mph)

- Pushing the SET **(+)** button once will result in a 1 mph increase in set speed. Each subsequent tap of the button results in an increase of 1 mph.
- If the button is continually pushed, the set speed will continue to increase until the button is released, then the new set speed will be established.

Metric Speed (km/h)

- Pushing the SET **(+)** button once will result in a 1 km/h increase in set speed. Each subsequent tap of the button results in an increase of 1 km/h.
- If the button is continually pushed, the set speed will continue to increase until the button is released, then the new set speed will be established.

To Decrease Speed

When the Speed Control is set, you can decrease speed by pushing the SET **(-)** button.

The driver's preferred units can be selected through the Uconnect system if equipped. Refer to "Uconnect Settings" in "Multimedia" for more information. The speed increment shown is dependant on the chosen speed unit of U.S. (mph) or Metric (km/h):

U.S. Speed (mph)

- Pushing the SET **(-)** button once will result in a 1 mph decrease in set speed. Each subsequent tap of the button results in a decrease of 1 mph.
- If the button is continually pushed, the set speed will continue to decrease until the button is released, then the new set speed will be established.

Metric Speed (km/h)

- Pushing the SET **(-)** button once will result in a 1 km/h decrease in set speed. Each subsequent tap of the button results in a decrease of 1 km/h.
- If the button is continually pushed, the set speed will continue to decrease until the button is released, then the new set speed will be established.

To Accelerate For Passing

Press the accelerator as you would normally. When the pedal is released, the vehicle will return to the set speed.

To Resume Speed

To resume a previously set speed, push the RES button and release. Resume can be used at any speed above 20 mph (32 km/h).

To Deactivate

A soft tap on the brake pedal, pushing the CANC (cancel) button, or normal brake pressure while slowing the vehicle will deactivate the speed control without erasing the set speed from memory.

Pushing the on/off button or turning the ignition switch OFF, erases the set speed from memory.

ADAPTIVE CRUISE CONTROL (ACC) — IF EQUIPPED

Adaptive Cruise Control (ACC) increases the driving convenience provided by cruise control while traveling on highways and major roadways. However, it is not a safety system and not designed to prevent collisions. **Speed Control function performs differently. Please refer to the proper section within this chapter.**

ACC will allow you to keep cruise control engaged in light to moderate traffic conditions without the constant need to reset your cruise control. ACC utilizes a radar sensor and a forward facing camera designed to detect a vehicle directly ahead of you.

NOTE:

- If the sensor does not detect a vehicle ahead of you, ACC will maintain a fixed set speed.
- If the ACC sensor detects a vehicle ahead, ACC will apply limited braking or acceleration (not to exceed the original set speed) automatically to maintain a preset following distance, while matching the speed of the vehicle ahead.

The Cruise Control system has two control modes:

- Adaptive Cruise Control mode for maintaining an appropriate distance between vehicles.
- Normal (Fixed Speed) Cruise Control mode for cruising at a constant preset speed. For additional information, refer to "Normal (Fixed Speed) Cruise Control Mode" in this section.

NOTE: Normal (Fixed Speed) Cruise Control will not react to preceding vehicles. Always be aware of the mode selected.

You can change the mode by using the Speed Control buttons. The two control modes function differently. Always confirm which mode is selected.

WARNING!

- **Adaptive Cruise Control (ACC) is a convenience system. It is not a substitute for active driving involvement. It is always the driver's responsibility to be attentive of road, traffic, and weather conditions, vehicle speed, distance to the vehicle ahead; and, most importantly, brake operation to ensure safe operation of the vehicle under all road conditions. Your complete attention is always required while driving to maintain safe control of your vehicle. Failure to follow these warnings can result in a collision and death or serious personal injury.**
- **The ACC system:**
  - **Does not react to pedestrians, oncoming vehicles, and stationary objects (e.g., a stopped vehicle in a traffic jam or a disabled vehicle).**

(Continued)

WARNING! *(Continued)*

- **Cannot take street, traffic, and weather conditions into account, and may be limited upon adverse sight distance conditions.**
- **Does not always fully recognize complex driving conditions, which can result in wrong or missing distance warnings.**
- **Will bring the vehicle to a complete stop while following a target vehicle and hold the vehicle for approximately 3 minutes in the stop position. If the target vehicle does not start moving within 3 minutes the parking brake will be activated, and the ACC system will be cancelled.**

You should switch off the ACC system:

- **When driving in fog, heavy rain, heavy snow, sleet, heavy traffic, and complex driving situations (i.e., in highway construction zones).**
- **When entering a turn lane or highway off ramp; when driving on roads that are winding, icy, snow-covered, slippery, or have steep uphill or downhill slopes.**
- **When towing a trailer up or down steep slopes.**
- **When circumstances do not allow safe driving at a constant speed.**

Adaptive Cruise Control (ACC) Operation

The Speed Control buttons (located on the right side of the steering wheel) operates the ACC system.

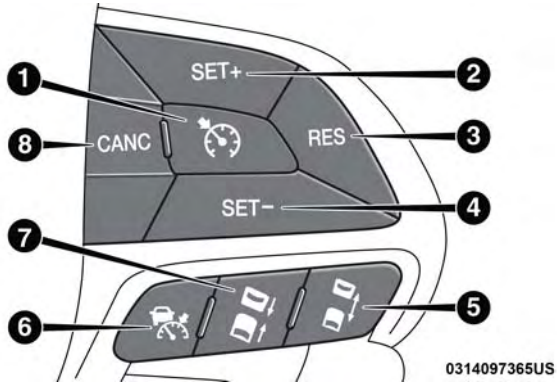

Adaptive Cruise Control Buttons

1 — Normal (Fixed Speed) Cruise Control On/Off	5 — Distance Setting Increase
2 — SET+/Accel	6 — Adaptive Cruise Control (ACC) On/Off
3 — RES/Resume	7 — Distance Setting Decrease
4 — SET-/Decel	8 — CANC/Cancel

NOTE: Any chassis/suspension or tire size modifications to the vehicle will effect the performance of the Adaptive Cruise Control and Forward Collision Warning System.

Activating Adaptive Cruise Control (ACC)

You can only engage ACC if the vehicle speed is above 0 mph (0 km/h).

The minimum set speed for the ACC system is 20 mph (32 km/h).

When the system is turned on and in the ready state, the instrument cluster display will read "ACC Ready."

When the system is off, the instrument cluster display will read "Adaptive Cruise Control (ACC) Off."

NOTE: You cannot engage ACC under the following conditions:

- When in Four-Wheel Drive Low.
- When you apply the brakes.
- When the parking brake is set.
- When the automatic transmission is in PARK, REVERSE or NEUTRAL.
- When the vehicle speed is outside of the speed range.
- When the brakes are overheated.
- When the driver door is open at low speed.
- When the driver seat belt is unbuckled at low speed.
- ESC Full-Off Mode is active.

To Set A Desired ACC Speed

When the vehicle reaches the speed desired, push the SET **(+)** button or the SET **(-)** button and release. The instrument cluster display will show the set speed.

If the system is set when the vehicle speed is below 20 mph (32 km/h), the set speed shall be defaulted to 20 mph (32 km/h). If the system is set when the vehicle speed is above 20 mph (32 km/h), the set speed shall be the current speed of the vehicle.

NOTE: ACC cannot be set if there is a stationary vehicle in front of your vehicle in close proximity.

Remove your foot from the accelerator pedal. If you do not, the vehicle may continue to accelerate beyond the set speed. If this occurs:

- The message "DRIVER OVERRIDE" will appear in the instrument cluster display.

- The system will not be controlling the distance between your vehicle and the vehicle ahead. The vehicle speed will only be determined by the position of the accelerator pedal.

To Activate/Deactivate

Push and release the Adaptive Cruise Control (ACC) on/off button. The ACC menu in the instrument cluster display will read "ACC Ready."

Adaptive Cruise Control Ready

To turn the system off, push and release the Adaptive Cruise Control (ACC) on/off button again. At this time, the system will turn off and the instrument cluster display will read "Adaptive Cruise Control (ACC) Off."

Adaptive Cruise Control Off

WARNING!

Leaving the Adaptive Cruise Control (ACC) system on when not in use is dangerous. You could accidentally set the system or cause it to go faster than you want. You could lose control and have a collision. Always leave the system off when you are not using it.

To Cancel

The following conditions cancel the system:

- The brake pedal is applied.

- The CANC (cancel) button is pushed.
- An Anti-Lock Brake System (ABS) event occurs.
- The gear selector is removed from the DRIVE position.
- The Electronic Stability Control/Traction Control System (ESC/TCS) activates.
- The vehicle parking brake is applied.
- Driver seatbelt is unbuckled at low speeds.
- Driver door is opened at low speeds.
- A Trailer Sway Control (TSC) event occurs.
- The driver switches ESC to full-off mode.
- The braking temperature exceeds normal range (overheated).

To Turn Off

The system will turn off and clear the set speed in memory if:

- You push the Adaptive Cruise Control (ACC) on/off button.
- You push the Normal (Fixed Speed) Cruise Control on/off button.
- You turn the ignition to the OFF position.
- You switch to Four-Wheel Drive Low.

Resume

If there is a set speed in memory, push the RES (resume) button and remove your foot from the accelerator pedal. The instrument cluster display will show the last set speed.

NOTE:

- If your vehicle stays at standstill for longer than two seconds, the driver will either have to push the RES (resume) button or apply the accelerator pedal to reengage the ACC to the existing set speed.
- ACC cannot be resumed if there is a stationary vehicle in-front of your vehicle in close proximity.

WARNING!

The Resume function should only be used if traffic and road conditions permit. Resuming a set speed that is too high or too low for prevailing traffic and road conditions could cause the vehicle to accelerate or decelerate too sharply for safe operation. Failure to follow these warnings can result in a collision and death or serious personal injury.

To Vary The Speed Setting

To Increase Speed

While ACC is set, you can increase the set speed by pushing the SET **(+)** button.

The speed increment shown is dependant on the chosen speed unit of U.S. (mph) or Metric (km/h):

U.S. Speed (mph)

- Pushing the SET **(+)** button once will result in a 1 mph increase in set speed. Each subsequent tap of the button results in an increase of 1 mph.
- If the button is continually pushed, the set speed will continue to increase in 5 mph increments until the button is released. The increase in set speed is reflected in the instrument cluster display.

Metric Speed (km/h)

- Pushing the SET **(+)** button once will result in a 1 km/h increase in set speed. Each subsequent tap of the button results in an increase of 1 km/h.
- If the button is continually pushed, the set speed will continue to increase in 10 km/h increments until the button is released. The increase in set speed is reflected in the instrument cluster display.

To Decrease Speed

While ACC is set, the set speed can be decreased by pushing the SET **(-)** button.

The speed decrement shown is dependant on the chosen speed unit of U.S. (mph) or Metric (km/h):

U.S. Speed (mph)

- Pushing the SET **(-)** button once will result in a 1 mph decrease in set speed. Each subsequent tap of the button results in a decrease of 1 mph.
- If the button is continually pushed, the set speed will continue to decrease in 5 mph increments until the button is released. The decrease in set speed is reflected in the instrument cluster display.

Metric Speed (km/h)

- Pushing the SET **(-)** button once will result in a 1 km/h decrease in set speed. Each subsequent tap of the button results in a decrease of 1 km/h.
- If the button is continually pushed, the set speed will continue to decrease in 10 km/h increments until the button is released. The decrease in set speed is reflected in the instrument cluster display.

NOTE:

- When you override and push the SET **(+)** button or SET **(-)** buttons, the new set speed will be the current speed of the vehicle.
- When you use the SET **(-)** button to decelerate, if the engine's braking power does not slow the vehicle sufficiently to reach the set speed, the brake system will automatically slow the vehicle.
- The ACC system decelerates the vehicle to a full stop when following a target vehicle. If an ACC host vehicle follows a target vehicle to a standstill, after two seconds the driver will either have to push the RES (resume) button, or apply the accelerator pedal to reengage the ACC to the existing set speed.
- The ACC system maintains set speed when driving up hill and down hill. However, a slight speed change on moderate hills is normal. In addition, downshifting may occur while climbing uphill or descending downhill. This is normal operation and necessary to maintain set speed. When driving up hill and down hill, the ACC system will cancel if the braking temperature exceeds normal range (overheated).

Setting The Following Distance In ACC

The specified following distance for ACC can be set by varying the distance setting between four bars (longest), three bars (long), two bars (medium) and one bar (short). Using this distance setting and the vehicle speed, ACC calculates and sets the distance to the vehicle ahead. This distance setting appears in the instrument cluster display.

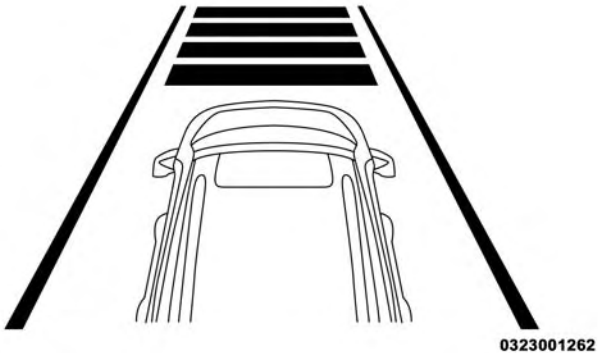

Distance Setting 4 Bars (Longest)

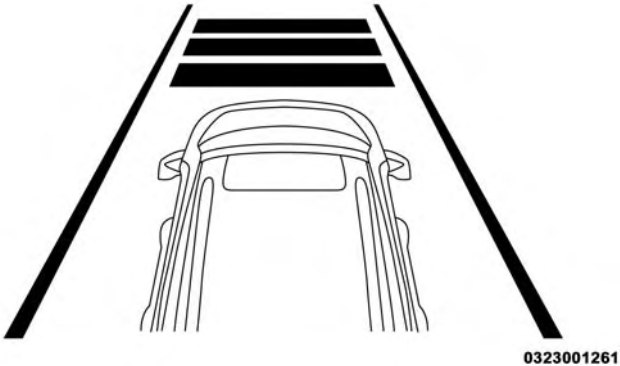

Distance Setting 3 Bars (Long)

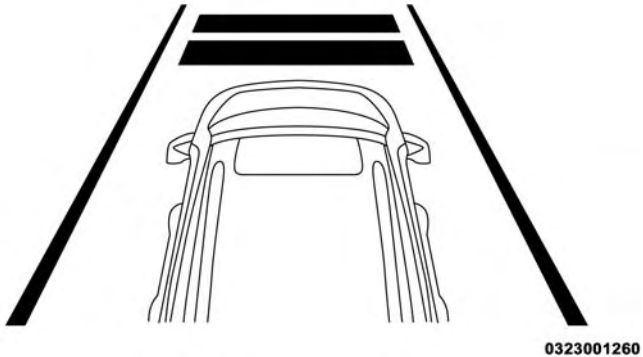

Distance Setting 2 Bars (Medium)

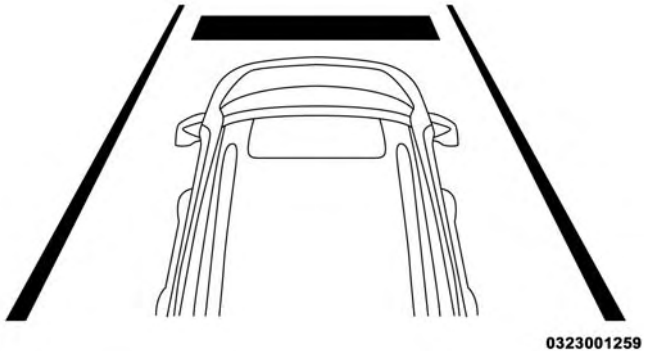

Distance Setting 1 Bar (Short)

To increase the distance setting, push the Distance Setting — Increase button and release. Each time the button is pushed, the distance setting increases by one bar (longer).

To decrease the distance setting, push the Distance Setting — Decrease button and release. Each time the button is pushed, the distance setting decreases by one bar (shorter).

If there is no vehicle ahead, the vehicle will maintain the set speed. If a slower moving vehicle is detected in the same lane, the instrument cluster display will show the "Sensed Vehicle Indicator" icon, and the system will adjust the vehicle speed automatically to maintain the distance setting, regardless of the set speed.

The vehicle will then maintain the set distance until:

- The vehicle ahead accelerates to a speed above the set speed.
- The vehicle ahead moves out of your lane or view of the sensor.
- The distance setting is changed.
- The system disengages. (Refer to the information on ACC Activation).

The maximum braking applied by ACC is limited; however, the driver can always apply the brakes manually, if necessary.

NOTE: The brake lights will illuminate whenever the ACC system applies the brakes.

A Proximity Warning will alert the driver if ACC predicts that its maximum braking level is not sufficient to maintain the set distance. If this occurs, a visual alert "BRAKE" will flash in the instrument cluster display and a chime will sound while ACC continues to apply its maximum braking capacity.

Brake Alert

NOTE: The "Brake!" Screen in the instrument cluster display is a warning for the driver to take action and does not necessarily mean that the Forward Collision Warning system is applying the brakes autonomously.

Overtake Aid

When driving with ACC engaged and following a vehicle, the system will provide an additional acceleration up to the ACC set speed to assist in passing the vehicle. This additional acceleration is triggered when the driver utilizes the left turn signal and will only be active when passing on the left hand side.

ACC Operation At Stop

If the ACC system brings your vehicle to a standstill while following a target vehicle, if the target vehicle starts moving within two seconds of your vehicle coming to a standstill, your vehicle will resume motion without the need for any driver action.

If the target vehicle does not start moving within two seconds of your vehicle coming to a standstill, the driver will either have to push the RES button, or press the accelerator to reengage the ACC to the existing set speed.

NOTE: After the ACC system holds your vehicle at a standstill for approximately 3 consecutive minutes, the parking brake system will be activated and the ACC system will be cancelled.

While ACC with stop is holding your vehicle at a standstill, if the driver seatbelt is unbuckled or the driver door is opened, the ACC with stop system will cancel and the brakes will ramp-out. Driver intervention will be required at this moment.

WARNING!

When the ACC system is resumed, the driver must ensure that there are no pedestrians, vehicles or objects in the path of the vehicle. Failure to follow these warnings can result in a collision and death or serious personal injury.

Adaptive Cruise Control (ACC) Menu

The instrument cluster display will show the current ACC system settings. The instrument cluster display is located in the center of the instrument cluster. The information it displays depends on ACC system status.

Push the Adaptive Cruise Control (ACC) on/off button (located on the steering wheel) until one of the following appears in the instrument cluster display:

Adaptive Cruise Control Off

When ACC is deactivated, the display will read "Adaptive Cruise Control Off."

Adaptive Cruise Control Ready

When ACC is activated but the vehicle speed setting has not been selected, the display will read "Adaptive Cruise Control Ready."

Push the SET (+) or the SET (-) button (located on the steering wheel) and the following will appear in the instrument cluster display:

ACC SET

When ACC is set, the set speed will show in the instrument cluster display.

The ACC screen may display once again if any ACC activity occurs, which may include any of the following:

- System Cancel
- Driver Override
- System Off
- ACC Proximity Warning
- ACC Unavailable Warning
- The instrument cluster display will return to the last display selected after five seconds of no ACC display activity

Display Warnings And Maintenance

"Wipe Front Radar Sensor In Front Of Vehicle" Warning

The "ACC/FCW Unavailable Wipe Front Radar Sensor" warning will display and also a chime will indicate when conditions temporarily limit system performance.

This most often occurs at times of poor visibility, such as in snow or heavy rain. The ACC system may also become temporarily blinded due to obstructions, such as mud, dirt or ice. In these cases, the instrument cluster display will read "ACC/FCW Unavailable Wipe Front Radar Sensor" and the system will deactivate.

The "ACC/FCW Unavailable Wipe Front Radar Sensor" message can sometimes be displayed while driving in highly reflective areas (i.e. tunnels with reflective tiles, or ice and snow). The ACC system will recover after the vehicle has left these areas. Under rare conditions, when the radar is not tracking any vehicles or objects in its path this warning may temporarily occur.

NOTE: If the "ACC/FCW Unavailable Wipe Front Radar Sensor" warning is active Normal (Fixed Speed) Cruise Control is still available. For additional information refer to "Normal (Fixed Speed) Cruise Control Mode" in this section.

If weather conditions are not a factor, the driver should examine the sensor. It may require cleaning or removal of an obstruction. The sensor is located in the center of the vehicle behind the lower grille.

To keep the ACC System operating properly, it is important to note the following maintenance items:

- Always keep the sensor clean. Carefully wipe the sensor lens with a soft cloth. Be cautious not to damage the sensor lens.
- Do not remove any screws from the sensor. Doing so could cause an ACC system malfunction or failure and require a sensor realignment.
- If the sensor or front end of the vehicle is damaged due to a collision, see your authorized dealer for service.
- Do not attach or install any accessories near the sensor, including transparent material or aftermarket grilles. Doing so could cause an ACC system failure or malfunction.

When the condition that deactivated the system is no longer present, the system will return to the "Adaptive Cruise Control Off" state and will resume function by simply reactivating it.

NOTE:

- If the "ACC/FCW Unavailable Wipe Front Radar Sensor" message occurs frequently (e.g. more than once on every trip) without any snow, rain, mud, or other obstruction, have the radar sensor realigned at your authorized dealer.
- Installing a snow plow, front-end protector, an aftermarket grille or modifying the grille is not recommended. Doing so may block the sensor and inhibit ACC/FCW operation.

"Clean Front Windshield" Warning

The "ACC/FCW Limited Functionality Clean Front Windshield" warning will display and also a chime will indicate when conditions temporarily limit system performance. This most often occurs at times of poor visibility, such as in snow or heavy rain and fog. The ACC system may also become temporarily blinded due to obstructions, such as mud, dirt, or ice on windshield and fog on the inside of glass. In these cases, the instrument cluster display will read "ACC/FCW Limited Functionality Clean Front Windshield" and the system will have degraded performance.

The "ACC/FCW Limited Functionality Clean Front Windshield" message can sometimes be displayed while driving in adverse weather conditions. The ACC/FCW system will recover after the vehicle has left these areas. Under rare conditions, when the camera is not tracking any vehicles or objects in its path this warning may temporarily occur.

If weather conditions are not a factor, the driver should examine the windshield and the camera located on the back side of the inside rear view mirror. They may require cleaning or removal of an obstruction.

When the condition that created limited functionality is no longer present, the system will return to full functionality.

NOTE: If the "ACC/FCW Limited Functionality Clean Front Windshield" message occurs frequently (e.g. more than once on every trip) without any snow, rain, mud, or other obstruction, have the windshield and forward facing camera inspected at your authorized dealer.

Service ACC/FCW Warning

If the system turns off, and the instrument cluster display reads "ACC/FCW Unavailable Service Required" or "Cruise/FCW Unavailable Service Required", there may be an internal system fault or a temporary malfunction that limits ACC functionality. Although the vehicle is still drivable under normal conditions, ACC will be temporarily unavailable. If this occurs, try activating ACC again later, following an ignition cycle. If the problem persists, see your authorized dealer.

Precautions While Driving With ACC

In certain driving situations, ACC may have detection issues. In these cases, ACC may brake late or unexpectedly. The driver needs to stay alert and may need to intervene.

Towing A Trailer

Towing a trailer is not advised when using ACC.

Offset Driving

ACC may not detect a vehicle in the same lane that is offset from your direct line of travel, or a vehicle merging in from a side lane. There may not be sufficient distance to the vehicle ahead. The offset vehicle may move in and out of the line of travel, which can cause your vehicle to brake or accelerate unexpectedly.

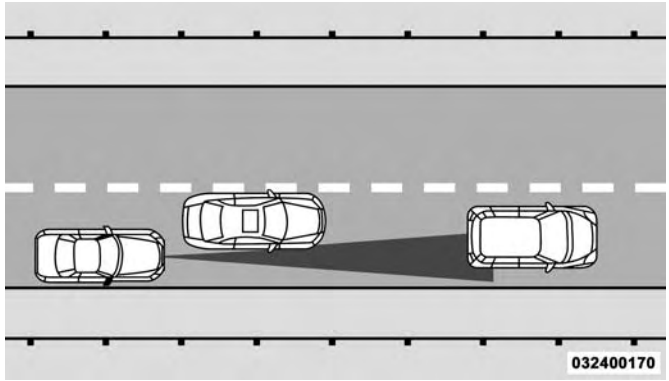

Offset Driving Condition Example

Turns And Bends

When driving on a curve with ACC engaged, the system may decrease the vehicle speed and acceleration for stability reasons, with no target vehicle detected. Once the vehicle is out of the curve the system will resume your original set speed. This is a part of normal ACC system functionality.

NOTE: On tight turns ACC performance may be limited.

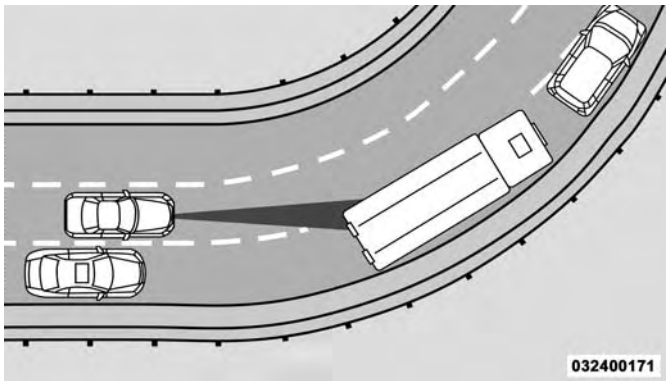

Turn Or Bend Example

Using ACC On Hills

When driving on hills, ACC may not detect a vehicle in your lane. Depending on the speed, vehicle load, traffic conditions, and the steepness of the hills, ACC performance may be limited.

ACC Hill Example

Lane Changing

ACC may not detect a vehicle until it is completely in the lane in which you are traveling. In the illustration shown, ACC has not yet detected the vehicle changing lanes and it may not detect the vehicle until it's too late for the ACC system to take action. ACC may not detect a vehicle until it is completely in the lane. There may not be sufficient distance to the lane-changing vehicle. Always be attentive and ready to apply the brakes if necessary.

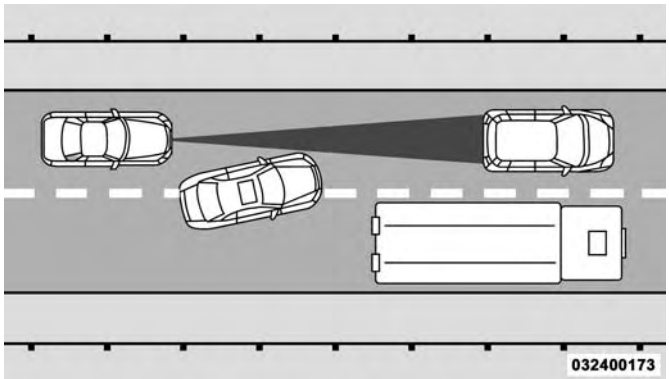

Lane Changing Example

Narrow Vehicles

Some narrow vehicles traveling near the outer edges of the lane or edging into the lane are not detected until they have moved fully into the lane. There may not be sufficient distance to the vehicle ahead.

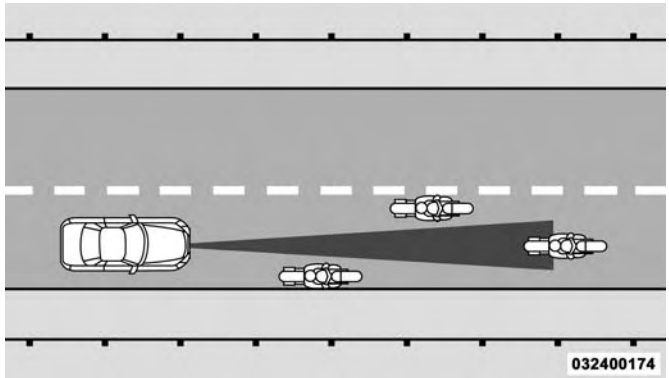

Narrow Vehicle Example

Stationary Objects And Vehicles

ACC does not react to stationary objects and stationary vehicles. For example, ACC will not react in situations where the vehicle you are following exits your lane and the vehicle ahead is stopped in your lane. Always be attentive and ready to apply the brakes if necessary.

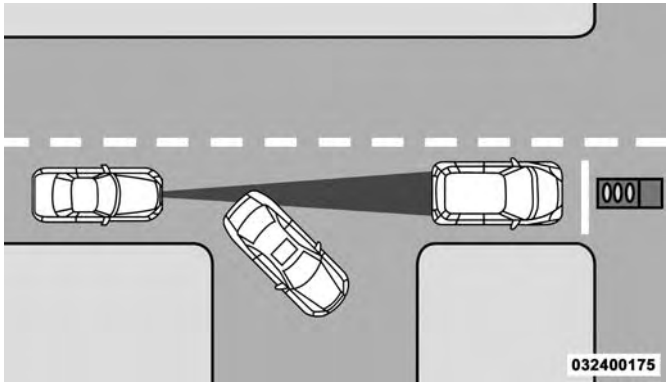

Stationary Object And Stationary Vehicle Example

General Information

This vehicle has systems that operate on radio frequency that comply with Part 15 of the Federal Communications Commission (FCC) rules and with Industry Canada Standards RSS- GEN/210/220/310.

Operation is subject to the following two conditions:

1. The device may not cause harmful interference.
2. The device must accept any interference received, including interference that may cause undesired operation of the device.

Changes or modifications to any of these systems by other than an authorized service facility could void authorization to use this equipment.

Normal (Fixed Speed) Cruise Control Mode

In addition to Adaptive Cruise Control mode, a Normal (Fixed Speed) Cruise Control mode is available for cruising at fixed speeds. The Normal (Fixed Speed) Cruise Control mode is designed to maintain a set cruising speed without requiring the driver to operate the accelerator. Speed Control can only be operated if the vehicle speed is above 20 mph (32 km/h).

To change between the different control modes, push the Adaptive Cruise Control (ACC) on/off button which turns the ACC and the Normal (Fixed Speed) Cruise Control off. Pushing of the Normal (Fixed Speed) Cruise Control on/off button will result in turning on (changing to) the Normal (Fixed Speed) Cruise Control mode.

WARNING!

In the Normal (Fixed Speed) Cruise Control mode, the system will not react to vehicles ahead. In addition, the proximity warning does not activate and no alarm will

(Continued)

WARNING! ***(Continued)***

sound even if you are too close to the vehicle ahead since neither the presence of the vehicle ahead nor the vehicle-to vehicle distance is detected. Be sure to maintain a safe distance between your vehicle and the vehicle ahead. Always be aware which mode is selected.

To Set A Desired Speed

Turn the Normal (Fixed Speed) Cruise Control on. When the vehicle has reached the desired speed, push the SET (+) or SET (-) button and release. Release the accelerator and the vehicle will operate at the selected speed. Once a speed has been set a message (CRUISE CONTROL SET TO MPH/km/h) will appear indicating what speed was set. This light will turn on when the speed control is set.

To Vary The Speed Setting

To Increase Speed

When the Normal (Fixed Speed) Cruise Control is set, you can increase speed by pushing the SET **(+)** button.

The driver's preferred units can be selected through the instrument panel settings if equipped. Refer to "Uconnect Settings" in "Multimedia" for more information. The speed increment shown is dependant on the speed of U.S. (mph) or Metric (km/h) units:

U.S. Speed (mph)

- Pushing the SET **(+)** button once will result in a 1 mph increase in set speed. Each subsequent tap of the button results in an increase of 1 mph.
- If the button is continually pushed, the set speed will continue to increase in 5 mph increments until the button is released. The increase in set speed is reflected in the instrument cluster display.

Metric Speed (km/h)

- Pushing the SET **(+)** button once will result in a 1 km/h increase in set speed. Each subsequent tap of the button results in an increase of 1 km/h.
- If the button is continually pushed, the set speed will continue to increase in 10 km/h increments until the button is released. The increase in set speed is reflected in the instrument cluster display.

To Decrease Speed

When the Normal (Fixed Speed) Cruise Control is set, you can decrease speed by pushing the SET **(-)** button.

The driver's preferred units can be selected through the instrument panel settings if equipped. Refer to "Uconnect Settings" in "Multimedia" for more information. The speed decrement shown is dependant on the speed of U.S. (mph) or Metric (km/h) units:

U.S. Speed (mph)

- Pushing the SET **(-)** button once will result in a 1 mph decrease in set speed. Each subsequent tap of the button results in a decrease of 1 mph.
- If the button is continually pushed, the set speed will continue to decrease in 5 mph decrements until the button is released. The decrease in set speed is reflected in the instrument cluster display.

Metric Speed (km/h)

- Pushing the SET **(-)** button once will result in a 1 km/h decrease in set speed. Each subsequent tap of the button results in a decrease of 1 km/h.
- If the button is continually pushed, the set speed will continue to decrease in 10 km/h decrements until the button is released. The decrease in set speed is reflected in the instrument cluster display.

To Cancel

The following conditions will cancel the Normal (Fixed Speed) Cruise Control without clearing the memory:

- The brake pedal is applied.
- The CANC (cancel) button is pushed.
- The Electronic Stability Control/Traction Control System (ESC/TCS) activates.
- The vehicle parking brake is applied.
- The braking temperature exceeds normal range (overheated).
- The gear selector is removed from the DRIVE position.
- The driver switches ESC to full-off mode.

To Resume Speed

To resume a previously set speed, push the RES button and release. Resume can be used at any speed above 20 mph (32 km/h).

To Turn Off

The system will turn off and erase the set speed in memory if:

- The Normal (Fixed Speed) Cruise Control on/off button is pushed.
- The ignition is turned OFF.
- You engage Four-Wheel Drive Low.
- The Adaptive Cruise Control (ACC) on/off button is pushed.

PARKSENSE REAR PARK ASSIST — IF EQUIPPED

The ParkSense Rear Park Assist system provides visual and audible indications of the distance between the rear fascia and a detected obstacle when backing up, e.g. during a parking maneuver. Refer to "ParkSense System Usage Precautions" in this section for limitations of this system and recommendations.

ParkSense will retain the last system state (enabled or disabled) from the last ignition cycle when the ignition is changed to the ON/RUN position.

ParkSense can be active only when the gear selector is in REVERSE. If ParkSense is enabled at this gear selector position, the system will remain active until the vehicle speed is increased to approximately 7 mph (11 km/h) or above. When in REVERSE and above the system's operating speed, a warning will appear within the instrument cluster display indicating the vehicle speed is too fast. The system will become active again if the vehicle speed is decreased to speeds less than approximately 6 mph (9 km/h).

ParkSense Sensors

The four ParkSense sensors, located in the rear fascia/bumper, monitor the area behind the vehicle that is within the sensors' field of view. The sensors can detect obstacles from approximately 12 inches (30 cm) up to 79 inches (200 cm) from the rear fascia/bumper in the horizontal direction, depending on the location, type and orientation of the obstacle.

ParkSense Warning Display

The ParkSense Warning screen will only be displayed if "Sound and Display" is selected from the Customer - Programmable Features section of the Uconnect System. Refer to "Uconnect Settings" in "Multimedia" for further information.

The ParkSense Warning screen is located within the instrument cluster display. It provides visual warnings to indicate the distance between the rear fascia/bumper and the detected obstacle. Refer to “Instrument Cluster Display” in “Getting To Know Your Instrument Panel” for further information.

ParkSense Display

When the vehicle is in REVERSE, the instrument cluster display will show the park assist ready system status.

The system will indicate a detected obstacle by showing a single arc in one or more regions based on the obstacle’s distance and location relative to the vehicle.

If an obstacle is detected in the center rear region, the display will show a single solid arc in the center rear region and will produce a one-half second tone. As the vehicle moves closer to the obstacle, the display will show the single arc moving closer to the vehicle and the sound tone will change from slow, to fast, to continuous.

If an obstacle is detected in the left and/or right rear region, the display will show a single flashing arc in the left and/or right rear region and will produce a fast sound tone. As the vehicle moves closer to the obstacle, the display will show the single arc moving closer to the vehicle and the tone will change from fast to continuous.

0329002014

Single 1/2 Second Tone/Solid Arc

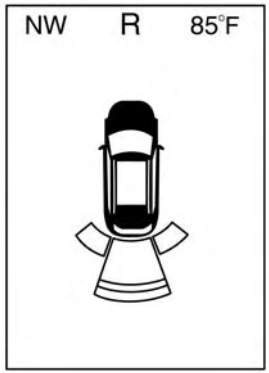

0329002016

Slow Tone/Solid Arc

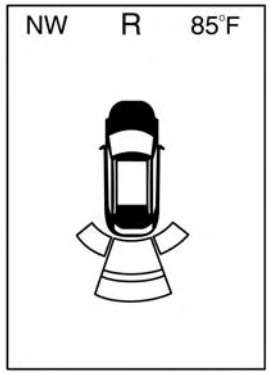

0329002018

Slow Tone/Solid Arc

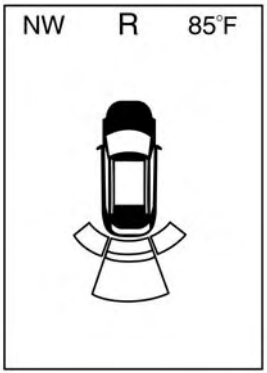

0329002020

Fast Tone/Flashing Arc

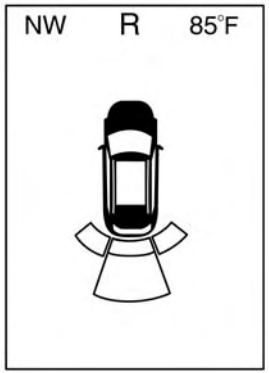

0329002022

Continuous Tone/Flashing Arc

The vehicle is close to the obstacle when the warning display shows one flashing arc and sounds a continuous tone. The following chart shows the warning alert operation when the system is detecting an obstacle:

WARNING ALERTS							
Rear Distance (inches/cm)	Greater than 79 inches (200 cm)	79-59 inches (200-150 cm)	59-47 inches (150-120 cm)	47-39 inches (120-100 cm)	39-25 inches (100-65 cm)	25-12 inches (65-30 cm)	Less than 12 inches (30 cm)
Arcs — Left	None	None	None	None	None	2nd Flashing	1st Flashing
Arcs — Center	None	6th Solid	5th Solid	4th Solid	3rd Flashing	2nd Flashing	1st Flashing
Arcs — Right	None	None	None	None	None	2nd Flashing	1st Flashing
Audible Alert Chime	None	Single 1/2-Second Tone (for rear center only)	Slow (for rear center only)	Slow (for rear center only)	Fast (for rear center only)	Fast	Continuous
Radio Volume Reduced	No	Yes	Yes	Yes	Yes	Yes	Yes

NOTE: ParkSense will reduce the volume of the radio, if on, when the system is sounding an audio tone.

Enabling And Disabling ParkSense

ParkSense can be enabled and disabled with the ParkSense switch, located on the switch panel below the Uconnect display.

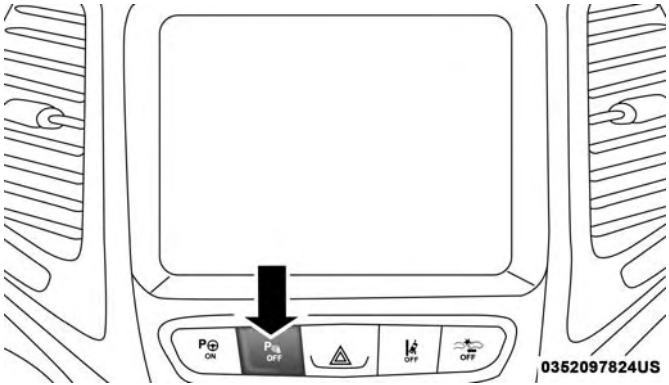

ParkSense Switch

When the ParkSense switch is pushed to disable the system, the instrument cluster display will show the "PARKSENSE OFF" message for approximately five seconds. Refer to "Instrument Cluster Display" in "Getting To Know Your Instrument Panel" for further information. When the gear selector is moved to REVERSE and the system is disabled, the instrument cluster display will show the "PARKSENSE OFF" message for as long as the vehicle is in REVERSE.

The ParkSense switch LED will be on when ParkSense is disabled or requires service. The ParkSense switch LED will be off when the system is enabled. If the ParkSense switch is pushed, and requires service, the ParkSense switch LED will blink momentarily, and then the LED will be on.

Service The ParkSense Rear Park Assist System

During vehicle start up, when the ParkSense Rear Park Assist System has detected a faulted condition, the instrument cluster display will actuate a single chime, once per ignition cycle, and it will display the "PARKSENSE UNAVAILABLE WIPE REAR SENSORS" or the "PARKSENSE UNAVAILABLE SERVICE REQUIRED" message. Refer to "Instrument Cluster Display". When the gear selector is moved to REVERSE and the system has detected a faulted condition, the instrument cluster display will show the "PARKSENSE UNAVAILABLE WIPE REAR SENSORS" or "PARKSENSE UNAVAILABLE SERVICE REQUIRED" message for as long as the vehicle is in REVERSE. Under this condition, ParkSense will not operate.

If "PARKSENSE UNAVAILABLE WIPE REAR SENSORS" appears in the instrument cluster display, make sure the outer surface and the underside of the rear fascia/bumper is clean and clear of snow, ice, mud, dirt or other obstruction and then cycle the ignition. If the message continues to appear, see an authorized dealer.

If "PARKSENSE UNAVAILABLE SERVICE REQUIRED" appears in the instrument cluster display, see an authorized dealer.

Cleaning The ParkSense System

Clean the Rear Park Assist sensors with water, car wash soap and a soft cloth. Do not use rough or hard cloths. In washing stations, clean sensors quickly keeping the vapor jet/high pressure washing nozzles at least 4 inches (10 cm) from the sensors. Do not scratch or poke the sensors. Otherwise, you could damage the sensors.

ParkSense System Usage Precautions

- Ensure that the rear bumper is free of snow, ice, mud, dirt and debris to keep the ParkSense system operating properly.
- Jackhammers, large trucks, and other vibrations could affect the performance of ParkSense.
- When you turn ParkSense off, the instrument cluster display will read "PARKSENSE OFF". Furthermore, once you turn ParkSense off, it remains off until you turn it on again, even if you cycle the ignition.
- When you move the gear selector to the REVERSE position and ParkSense is turned off, the instrument cluster display will show a "PARKSENSE OFF" message for as long as the vehicle is in REVERSE.
- ParkSense, when on, will reduce the volume of the radio when it is sounding a tone.
- Clean the ParkSense sensors regularly, taking care not to scratch or damage them. The sensors must not be covered with ice, snow, slush, mud, dirt or debris. Failure to do so can result in the system not working properly. The ParkSense system might not detect an obstacle behind the fascia/bumper, or it could provide a false indication that an obstacle is behind the fascia/bumper.
- Use the ParkSense switch to turn the ParkSense system OFF if objects such as bicycle carriers, etc. are placed within 12 inches (30 cm) from the rear fascia/bumper. Failure to do so can result in the system misinterpreting a close object as a sensor problem, causing the

"PARKSENSE UNAVAILABLE SERVICE REQUIRED" message to be displayed in the instrument cluster display.

- ParkSense should be disabled when the liftgate is in the open position and the vehicle is in REVERSE. An open liftgate could provide a false indication that an obstacle is behind the vehicle.

WARNING!

- **Drivers must be careful when backing up even when using ParkSense. Always check carefully behind your vehicle, look behind you, and be sure to check for pedestrians, animals, other vehicles, obstructions, and blind spots before backing up. You are responsible for safety and must continue to pay attention to your surroundings. Failure to do so can result in serious injury or death.**
- **Before using ParkSense, it is strongly recommended that the ball mount and hitch ball assembly is disconnected from the vehicle when the vehicle is not used for towing. Failure to do so can result in injury or damage to vehicles or obstacles because the hitch ball will be much closer to the obstacle than the**

(Continued)

WARNING! *(Continued)*

rear fascia when the loudspeaker sounds the continuous tone. Also, the sensors could detect the ball mount and hitch ball assembly, depending on its size and shape, giving a false indication that an obstacle is behind the vehicle.

CAUTION!

- **ParkSense is only a parking aid and it is unable to recognize every obstacle, including small obstacles. Parking curbs might be temporarily detected or not detected at all. Obstacles located above or below the sensors will not be detected when they are in close proximity.**
- **The vehicle must be driven slowly when using ParkSense in order to be able to stop in time when an obstacle is detected. It is recommended that the driver looks over his/her shoulder when using ParkSense.**

PARKSENSE FRONT AND REAR PARK ASSIST — IF EQUIPPED

The ParkSense Park Assist system provides visual and audible indications of the distance between the rear and/or front fascia and a detected obstacle when backing up or moving forward, e.g. during a parking maneuver. If your vehicle is equipped with an Automatic Transmission, the vehicle brakes may be automatically applied and released when performing a reverse parking maneuver if the system detects a possible collision with an obstacle.

NOTE:

- The driver can override the automatic braking function by pressing the gas pedal, turning ParkSense off via ParkSense switch, or changing the gear while the automatic brakes are being applied.
- Automatic brakes will not be available if ESC is not available.
- Automatic brakes will not be available if there is a faulted condition detected with the ParkSense Park Assist system or the Braking System Module.
- The automatic braking function may only be applied if the vehicle deceleration is not enough to avoid colliding with a detected obstacle.
- The automatic braking function may not be applied fast enough for obstacles that move toward the rear of the vehicle from the left and/or right sides.
- The automatic braking function can be enabled/disabled from the Customer-Programmable Features section of the Uconnect System.
- ParkSense will retain its last known configuration state for the automatic braking function through ignition cycles.

The automatic braking function is intended to assist the driver in avoiding possible collisions with detected obstacles when backing up in REVERSE gear.

NOTE:

- The driver is always responsible for controlling the vehicle.
- The system is provided to assist the driver and not to substitute the driver.
- The driver must stay in full control of the vehicle's acceleration and braking and is responsible for the vehicle's movements.

Refer to "ParkSense System Usage Precautions" for limitations of this system and recommendations.

ParkSense will retain the last system state (enabled or disabled) from the last ignition cycle when the ignition is changed to the ON/RUN position.

ParkSense can be active only when the gear selector is in REVERSE or DRIVE. If ParkSense is enabled at one of these gear selector positions, the system will remain active until the vehicle speed is increased to approximately 7 mph (11 km/h) or above. When in REVERSE and above the system's operating speed, a warning will appear in the instrument cluster display indicating the vehicle speed is too fast. The system will become active again if the vehicle speed is decreased to speeds less than approximately 6 mph (9 km/h).

ParkSense Sensors

The four ParkSense sensors, located in the rear fascia/bumper, monitor the area behind the vehicle that is within the sensors' field of view. The sensors can detect obstacles from approximately 12 inches (30 cm) up to 79 inches (200 cm) from the rear fascia/bumper in the horizontal direction, depending on the location, type and orientation of the obstacle.

NOTE: If your vehicle is equipped with the ParkSense Active Park Assist system, six sensors will be located in the rear fascia/bumper. Refer to the "ParkSense Active Park Assist System" section for further information.

The six ParkSense sensors, located in the front fascia/bumper, monitor the area in front of the vehicle that is within the sensors' field of view. The sensors can detect obstacles from approximately 12 inches (30 cm) up to 47 inches (120 cm) from the front fascia/bumper in the horizontal direction, depending on the location, type and orientation of the obstacle.

ParkSense Warning Display

The ParkSense Warning screen will only be displayed if "Sound and Display" is selected from the Customer - Programmable Features section of the Uconnect System. Refer to "Uconnect Settings" in "Multimedia" for further information.

The ParkSense Warning screen is located within the instrument cluster display. It provides visual warnings to indicate the distance between the rear fascia/bumper and/or front fascia/bumper and the detected obstacle. Refer to "Instrument Cluster Display" in "Getting To Know Your Instrument Panel" for further information.

ParkSense Display

Rear Park Assist

When the vehicle is in REVERSE and an obstacle has been detected, the warning display will turn on indicating the system status.

The system will indicate a detected obstacle by showing a single arc in one or more regions based on the obstacle's distance and location relative to the vehicle.

If an obstacle is detected in the center rear region, the display will show a single solid arc in the center rear region and will produce a one-half second tone. As the vehicle moves closer to the obstacle, the display will show the single arc moving closer to the vehicle and the sound tone will change from slow, to fast, to continuous.

If an obstacle is detected in the left and/or right rear region, the display will show a single flashing arc in the left and/or right rear region and will produce a fast sound tone. As the vehicle moves closer to the obstacle, the display will show the single arc moving closer to the vehicle and the tone will change from fast to continuous.

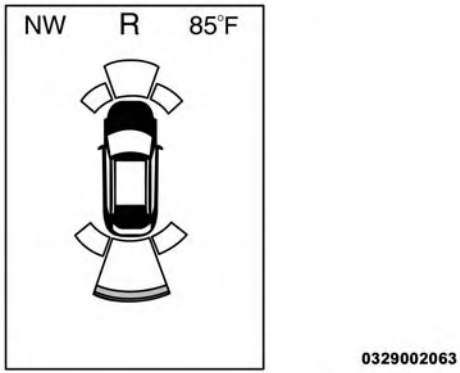

Single 1/2 Second Tone/Solid Arc

0329002064

Slow Tone/Solid Arc

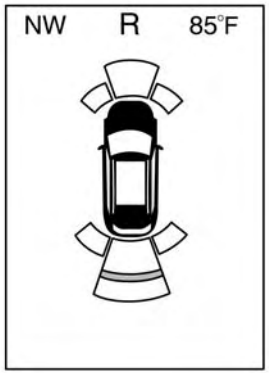

0329002065

Slow Tone/Solid Arc

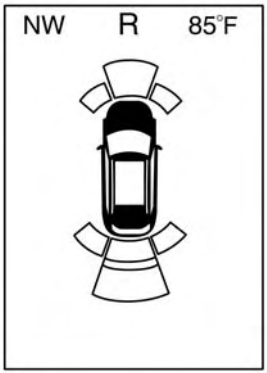

0329002066

Fast Tone/Flashing Arc

0329002019

Fast Tone/Flashing Arc

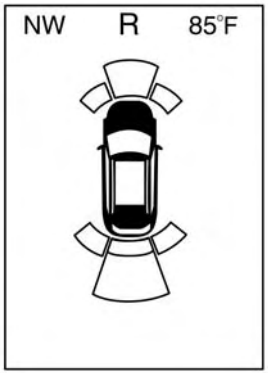

0329002021

Continuous Tone/Flashing Arc

The vehicle is close to the obstacle when the warning display shows one flashing arc and sounds a continuous tone. The following chart shows the warning alert operation when the system is detecting an obstacle:

WARNING ALERTS							
Rear Distance (inches/cm)	Greater than 79 inches (200 cm)	79-59 inches (200-150 cm)	59-47 inches (150-120 cm)	47-39 inches (120-100 cm)	39-25 inches (100-65 cm)	25-12 inches (65-30 cm)	Less than 12 inches (30 cm)
Arcs — Left	None	None	None	None	None	2nd Flashing	1st Flashing
Arcs — Center	None	6th Solid	5th Solid	4th Solid	3rd Flashing	2nd Flashing	1st Flashing
Arcs — Right	None	None	None	None	None	2nd Flashing	1st Flashing
Audible Alert Chime	None	Single 1/2-Second Tone (for rear center only)	Slow (for rear center only)	Slow (for rear center only)	Fast (for rear center only)	Fast	Continuous
Radio Volume Reduced	No	Yes	Yes	Yes	Yes	Yes	Yes

NOTE: ParkSense will reduce the volume of the radio, if on, when the system is sounding an audio tone.

Front Park Assist

When the vehicle is in DRIVE the ParkSense Warning screen will be displayed when an obstacle is detected.

The system will indicate a detected obstacle by showing a single arc in one or more regions based on the obstacle's distance and location relative to the vehicle.

If an obstacle is detected in the center front region, the display will show a single arc in the center front region. As the vehicle moves closer to the obstacle, the display will show the single arc moving closer to the vehicle. A fast sound tone will be produced when reaching the second flashing arc and will change to a continuous sound tone when the 1st flashing arc appears.

If an obstacle is detected in the left and/or right front region, the display will show a single flashing arc in the left and/or right front region and will produce a fast sound tone. As the vehicle moves closer to the obstacle, the display will show the single arc moving closer to the vehicle and the tone will change from fast to continuous.

0329002059

No Tone/Solid Arc

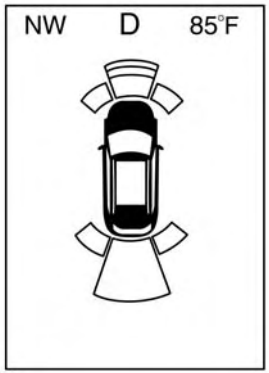

0329002060

No Tone/Flashing Arc

0329002061

Fast Tone/Flashing Arc

0329002062

Continuous Tone/Flashing Arc

The vehicle is close to the obstacle when the warning display shows one flashing arc and sounds a continuous tone. The following chart shows the warning alert operation when the system is detecting an obstacle:

WARNING ALERTS					
Front Distance (inches/cm)	Greater than 47 inches (120 cm)	47-39 inches (120-100 cm)	39-25 inches (100-65 cm)	25-12 inches (65-30 cm)	Less than 12 inches (30 cm)
Arcs — Left	None	None	None	2nd Flashing	1st Flashing
Arcs — Center	None	4th Solid	3rd Flashing	2nd Flashing	1st Flashing
Arcs — Right	None	None	None	2nd Flashing	1st Flashing
Audible Alert Chime	None	None	None	Fast	Continuous
Radio Volume Reduced	No	No	No	Yes	Yes

NOTE: ParkSense will reduce the volume of the radio, if on, when the system is sounding an audio tone.

Front Park Assist Audible Alerts

ParkSense will turn off the Front Park Assist audible alert (chime) after approximately three seconds when an obstacle has been detected, the vehicle is stationary, and brake pedal is applied.

Adjustable Chime Volume Settings

Front and Rear chime volume settings can be selected from the Customer-Programmable Features section of the Uconnect System, refer to “Uconnect Settings” in “Multimedia” for further information.

If the Uconnect System is equipped, chime volume settings will not be accessible from the instrument cluster display.

The chime volume settings include LOW, MEDIUM, and HIGH. The factory default volume setting is MEDIUM.

ParkSense will retain its last known configuration state through ignition cycles.

Enabling And Disabling ParkSense

ParkSense can be enabled and disabled with the ParkSense switch, located on the switch panel below the Uconnect display.

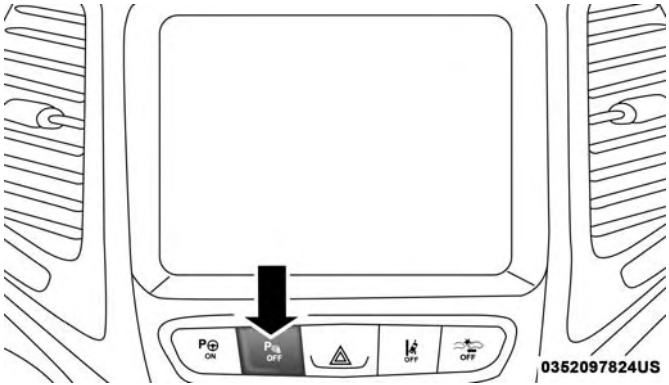

ParkSense Switch

When the ParkSense switch is pushed to disable the system, the instrument cluster display will show the "PARKSENSE OFF" message for approximately five seconds. Refer to "Instrument Cluster Display" in "Getting To Know Your Instrument Panel" for further information. When the gear selector is moved to REVERSE and the system is disabled, the instrument cluster display will show the "PARKSENSE OFF" message for as long as the vehicle is in REVERSE.

The ParkSense switch LED will be on when ParkSense is disabled or requires service. The ParkSense switch LED will be off when the system is enabled. If the ParkSense switch is pushed, and requires service, the ParkSense switch LED will blink momentarily, and then the LED will be on.

Service The ParkSense Park Assist System

During vehicle start up, when the ParkSense System has detected a faulted condition, the instrument cluster will actuate a single chime, once per ignition cycle, and it will display the "PARKSENSE UNAVAILABLE WIPE REAR SENSORS", "PARKSENSE UNAVAILABLE WIPE FRONT SENSORS", or the "PARKSENSE UNAVAILABLE SERVICE REQUIRED" message for five seconds. When the gear selector is moved to REVERSE and the system has detected a faulted condition, the instrument cluster display will display a "PARKSENSE UNAVAILABLE WIPE REAR SENSORS", "PARKSENSE UNAVAILABLE WIPE FRONT SENSORS" or "PARKSENSE UNAVAILABLE SERVICE REQUIRED" pop up message for five seconds. After five seconds, a vehicle graphic will be displayed with "UNAVAILABLE" at either the front or rear sensor location depending on where the fault is detected. The system will continue to provide arc alerts for the side that is functioning properly. These arc alerts will interrupt the

"PARKSENSE UNAVAILABLE WIPE REAR SENSORS", "PARKSENSE UNAVAILABLE WIPE FRONT SENSORS", or "PARKSENSE UNAVAILABLE SERVICE REQUIRED" messages if an object is detected within the five second pop-up duration. The vehicle graphic will remain displayed for as long as the vehicle is in REVERSE. Refer to "Instrument Cluster Display" for further information.

If "PARKSENSE UNAVAILABLE WIPE REAR SENSORS" or "PARKSENSE UNAVAILABLE WIPE FRONT SENSORS" appears in the instrument cluster display make sure the outer surface and the underside of the rear fascia/bumper and/or front fascia/bumper is clean and clear of snow, ice, mud, dirt or other obstruction and then cycle the ignition. If the message continues to appear see an authorized dealer.

If the "PARKSENSE UNAVAILABLE SERVICE REQUIRED" message appears in the instrument cluster display, see an authorized dealer.

Cleaning The ParkSense System

Clean the Rear Park Assist sensors with water, car wash soap and a soft cloth. Do not use rough or hard cloths. In washing stations, clean sensors quickly keeping the vapor jet/high pressure washing nozzles at least 4 inches (10 cm) from the sensors. Do not scratch or poke the sensors. Otherwise, you could damage the sensors.

ParkSense System Usage Precautions

NOTE:

- Ensure that the front and rear bumper are free of snow, ice, mud, dirt and debris to keep the ParkSense system operating properly.
- Construction equipment, large trucks, and other vibrations could affect the performance of ParkSense.
- When you turn ParkSense off, the instrument cluster display will read "PARKSENSE OFF." Furthermore, once you turn ParkSense off, it remains off until you turn it on again, even if you cycle the ignition key.
- When you move the gear selector to the REVERSE position and ParkSense is turned off, the instrument cluster display will read "PARKSENSE OFF" for as long as the vehicle is in REVERSE.
- ParkSense, when on, will reduce the volume of the radio when it is sounding a tone.

- Clean the ParkSense sensors regularly, taking care not to scratch or damage them. The sensors must not be covered with ice, snow, slush, mud, dirt or debris. Failure to do so can result in the system not working properly. The ParkSense system might not detect an obstacle behind or in front of the fascia/bumper, or it could provide a false indication that an obstacle is behind or in front of the fascia/bumper.
- Use the ParkSense switch to turn the ParkSense system off if objects such as bicycle carriers, etc. are placed within 12 inches (30 cm) from the rear fascia/bumper. Failure to do so can result in the system misinterpreting a close object as a sensor problem, causing the "PARKSENSE UNAVAILABLE SERVICE REQUIRED" message to appear in the instrument cluster display.
- ParkSense should be disabled when the liftgate is in the open position. An opened liftgate could provide a false indication that an obstacle is behind the vehicle.
- There may be a delay in the object detection rate if the object is moving. This will cause the automatic braking application to be delayed.

WARNING!

- **Drivers must be careful when backing up even when using ParkSense. Always check carefully behind your vehicle, look behind you, and be sure to check for pedestrians, animals, other vehicles, obstructions, and blind spots before backing up. You are responsible for safety and must continue to pay attention to your surroundings. Failure to do so can result in serious injury or death.**
- **Before using ParkSense, it is strongly recommended that the ball mount and hitch ball assembly is disconnected from the vehicle when the vehicle is not used for towing. Failure to do so can result in injury or damage to vehicles or obstacles because the hitch ball will be much closer to the obstacle than the rear fascia when the loudspeaker sounds the continuous tone. Also, the sensors could detect the ball mount and hitch ball assembly, depending on its size and shape, giving a false indication that an obstacle is behind the vehicle.**

CAUTION!

- **ParkSense is only a parking aid and it is unable to recognize every obstacle, including small obstacles. Parking curbs might be temporarily detected or not detected at all. Obstacles located above or below the sensors will not be detected when they are in close proximity.**
- **The vehicle must be driven slowly when using ParkSense in order to be able to stop in time when an obstacle is detected. It is recommended that the driver looks over his/her shoulder when using ParkSense.**

PARKSENSE ACTIVE PARK ASSIST SYSTEM — IF EQUIPPED

The ParkSense Active Park Assist system is intended to assist the driver during parallel and perpendicular parking maneuvers by identifying a proper parking space, providing audible/visual instructions, and controlling the steering wheel. The ParkSense Active Park Assist system is defined as "semi-automatic" since the driver maintains control of the accelerator, gear selector and brakes. Depending on the driver's parking maneuver selection, the ParkSense Active Park Assist system is capable of maneuvering a vehicle into a parallel or a perpendicular parking space on either side (i.e., driver side or passenger side).

NOTE:

- The driver is always responsible for controlling the vehicle, responsible for any surrounding objects, and must intervene as required.
- The system is provided to assist the driver and not to substitute the driver.
- During a semi-automatic maneuver, if the driver touches the steering wheel after being instructed to remove their hands from the steering wheel, the system will cancel, and the driver will be required to manually complete the parking maneuver.
- The system may not work in all conditions (e.g. environmental conditions such as heavy rain, snow, etc., or if searching for a parking space that has surfaces that will absorb the ultrasonic sensor waves).
- New vehicles from the dealer must have at least 30 miles (48 km) accumulated before the ParkSense Active Park Assist system is fully calibrated and performs accurately. This is due to the system's dynamic vehicle calibration to improve the performance of the feature. The system

will also continuously perform the dynamic vehicle calibration to account for differences such as over or under inflated tires and new tires.

Enabling And Disabling The ParkSense Active Park Assist System

The ParkSense Active Park Assist system can be enabled and disabled with the ParkSense Active Park Assist switch, located on the switch panel below the Uconnect display.

ParkSense Active Park Assist Switch

To enable the ParkSense Active Park Assist system, push the ParkSense Active Park Assist switch once (LED turns on).

To disable the ParkSense Active Park Assist system, push the ParkSense Active Park Assist switch again (LED turns off).

The ParkSense Active Park Assist system will turn off automatically for any of the following conditions:

- The parking maneuver is completed.
- Vehicle speed greater than 18 mph (30 km/h) when searching for a parking space.
- Vehicle speed greater than 5 mph (7 km/h) during active steering guidance into the parking space.
- Touching the steering wheel during active steering guidance into the parking space.
- Pushing the ParkSense Front and Rear Park Assist switch.
- Driver's door is opened.
- Rear liftgate is opened.
- Electronic Stability Control/Anti-lock Braking System intervention.
- The ParkSense Active Park Assist system will allow a maximum of six shifts between DRIVE and REVERSE. If the maneuver cannot be completed within six shifts, the

system will cancel and the instrument cluster display will instruct the driver to complete the maneuver manually.

The ParkSense Active Park Assist system will only operate and search for a parking space when the following conditions are present:

- Gear position is in DRIVE.
- Ignition is in the RUN position.
- ParkSense Active Park Assist switch is activated.
- Driver's door is closed.
- Rear liftgate is closed.
- Vehicle speed is less than 15 mph (25 km/h).

NOTE: If the vehicle is driven above approximately 15 mph (25 km/h), the instrument cluster display will instruct the driver to slow down. If the vehicle is driven above approximately 18 mph (30 km/h), the system will cancel. The driver must then reactivate the system by pushing the ParkSense Active Park Assist switch.

- The outer surface and the underside of the front and rear fascias/bumpers are clean and clear of snow, ice, mud, dirt or other obstruction.

When pushed, the LED on the ParkSense Active Park Assist switch will blink momentarily, and then the LED will turn off if any of the above conditions are not present.

Parallel Parking Space Assistance Operation/ Display

When the ParkSense Active Park Assist system is enabled the "Active ParkSense Searching - Push OK to Switch to Perpendicular" message will appear in the instrument cluster display. You may switch to perpendicular parking if you desire. Push the OK button on the left side steering wheel switch to change your parking space setting.

NOTE:

- When searching for a parking space, use the turn signal indicator to select which side of the vehicle you want to perform the parking maneuver. The ParkSense Active Park Assist system will automatically search for a parking space on the passenger's side of the vehicle if the turn signal is not activated.
- The driver needs to make sure that the selected parking space for the maneuver remains free and clear of any obstructions (e.g. pedestrians, bicycles, etc.).
- The driver is responsible to ensure that the selected parking space is suitable for the maneuver and free/

clear of anything that may be overhanging or protruding into the parking space (e.g., ladders, tailgates, etc. from surrounding objects/vehicles).

- When seeking for a parking space, the driver should drive as parallel or perpendicular (depending on the type of maneuver) to other vehicles as possible.
- The feature will only indicate the last detected parking space (example: if passing multiple available parking spaces, the system will only indicate the last detected parking space for the maneuver).

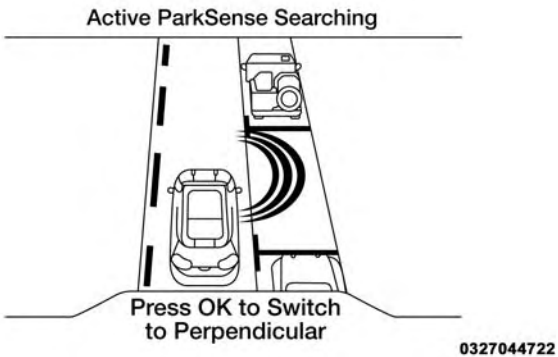

Active ParkSense Searching

When an available parking space has been found, and the vehicle is not in position, you will be instructed to move forward to position the vehicle for a parallel parking sequence.

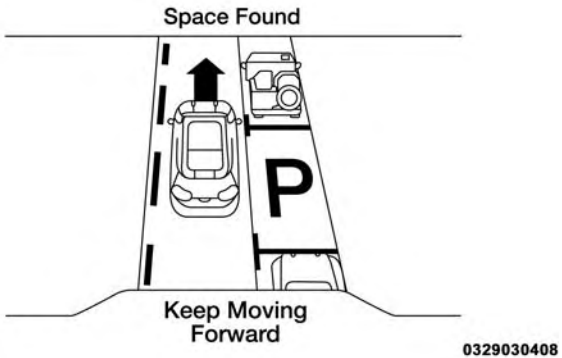

Space Found — Keep Moving Forward

Once the vehicle is in position, you will be instructed to stop the vehicle's movement and remove your hands from the steering wheel.

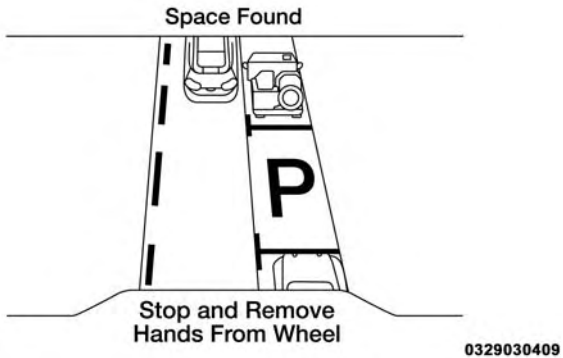

Space Found — Stop And Remove Hands From Wheel

Once the vehicle is at a standstill with your hands removed from the steering wheel, you will be instructed to place the gear selector into the REVERSE position.

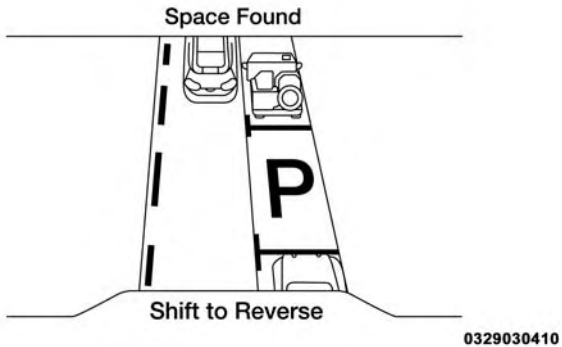

Space Found — Shift To Reverse

When the driver places the gear selector into the REVERSE position, the system may instruct the driver to wait for steering to complete.

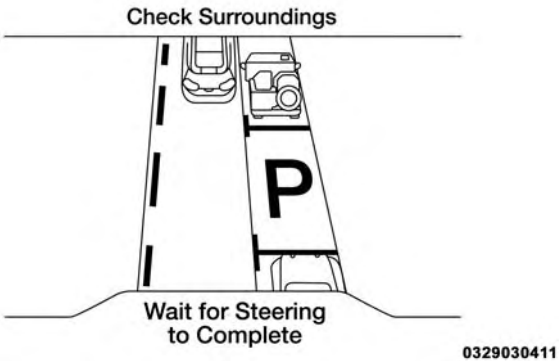

Check Surroundings — Wait For Steering To Complete

The system will then instruct the driver to check their surroundings and move backward.

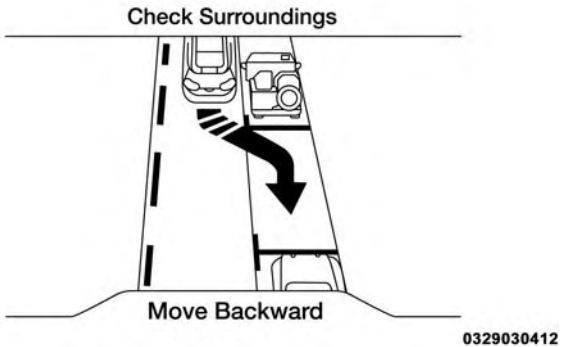

Check Surroundings — Move Backward

NOTE:

- It is the driver's responsibility to use the brake and accelerator during the semi-automatic parking maneuver.
- When the system instructs the driver to remove their hands from the steering wheel, the driver should check their surroundings and begin to back up slowly.

- The ParkSense Active Park Assist system will allow a maximum of six shifts between DRIVE and REVERSE. If the maneuver cannot be completed within six shifts, the system will cancel and the instrument cluster display will instruct the driver to complete the maneuver manually.
- The system will cancel the maneuver if the vehicle speed exceeds 5 mph (7 km/h) during active steering guidance into the parking space. The system will provide a warning to the driver at 3 mph (5 km/h) that tells them to slow down. The driver is then responsible for completing the maneuver if the system is canceled.
- If the system is canceled during the maneuver for any reason, the driver must take control of the vehicle.

When the vehicle has reached the end of its backward movement, the system will instruct the driver to check their surroundings and stop the vehicle's movement.

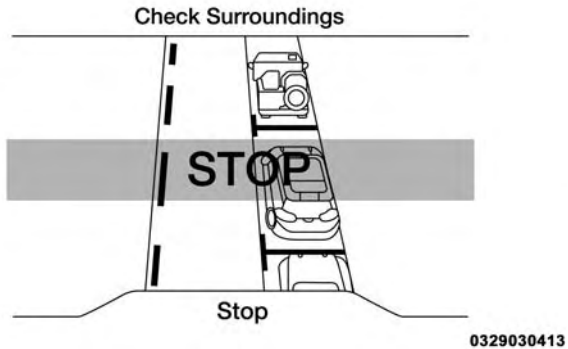

Check Surroundings — STOP

NOTE: It is the driver's responsibility to use the brake and stop the vehicle. The driver should check their surroundings and be prepared to stop the vehicle either when instructed to, or when driver intervention is required.

Once the vehicle is in a standstill condition, the driver will be instructed to place the gear selector into the DRIVE position.

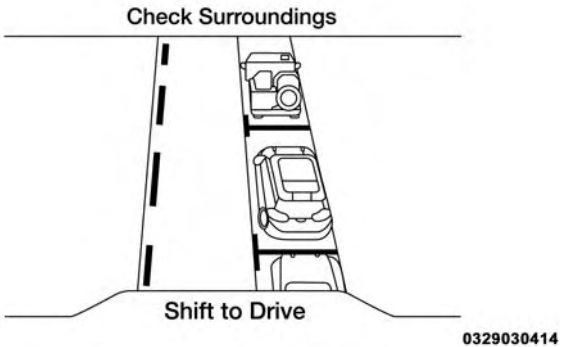

Check Surroundings — Shift To Drive

When the driver places the gear selector into the DRIVE position, the system may instruct the driver to wait for steering to complete.

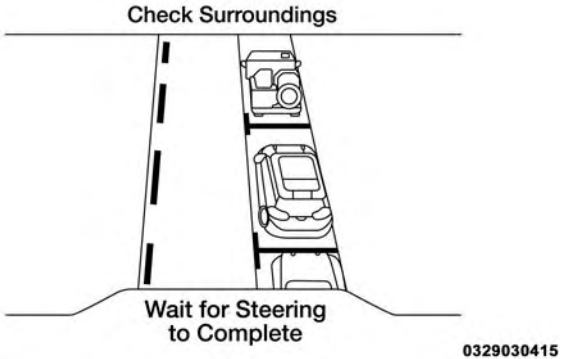

Check Surroundings — Wait For Steering To Complete

The system will then instruct the driver to check their surroundings and move forward.

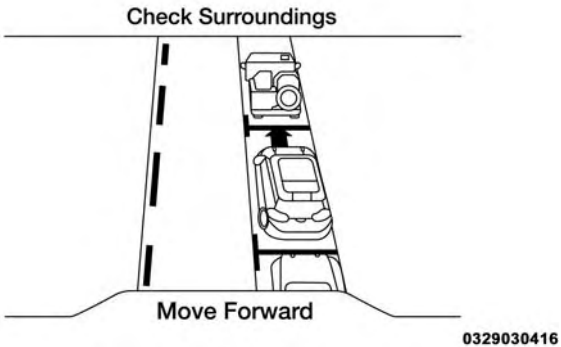

Check Surroundings — Move Forward

When the vehicle has reached the end of its forward movement, the system will instruct the driver to check their surroundings and stop the vehicle's movement.

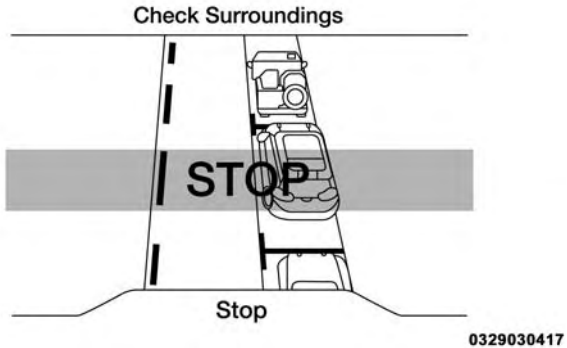

Check Surroundings — STOP

NOTE: It is the driver's responsibility to use the brake and stop the vehicle. The driver should check their surroundings and be prepared to stop the vehicle either when instructed to, or when driver intervention is required.

Once the vehicle is in a standstill condition, the driver will be instructed to place the gear selector into the REVERSE position.

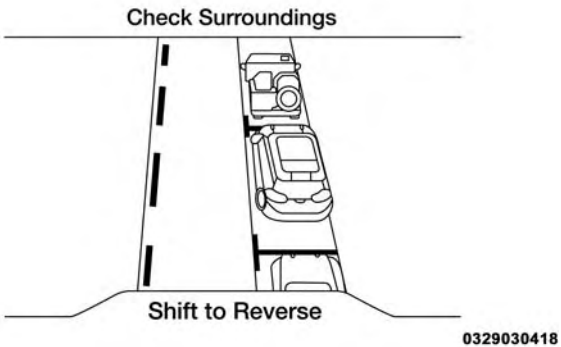

Check Surroundings — Shift To Reverse

When the driver places the gear selector into the REVERSE position, the system may instruct the driver to wait for steering to complete.

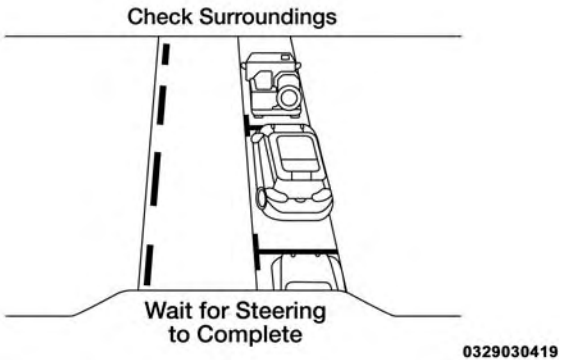

Check Surroundings — Wait For Steering To Complete

The system will then instruct the driver to check their surroundings and move backward.

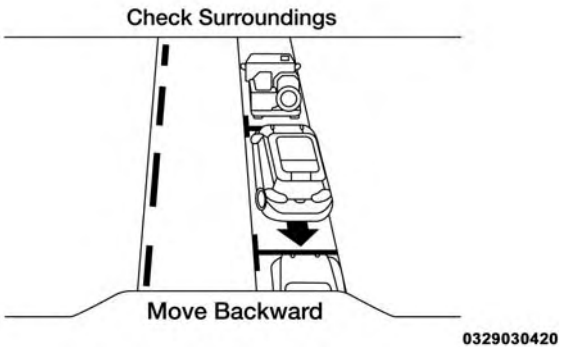

Check Surroundings — Move Backward

Your vehicle is now in the parallel park position. When the maneuver is complete, the driver will be instructed to check the vehicle's parking position. If the driver is satisfied with the vehicle position, they should shift to PARK. The "Active ParkSense Complete - Check Parking Position" message will be momentarily displayed.

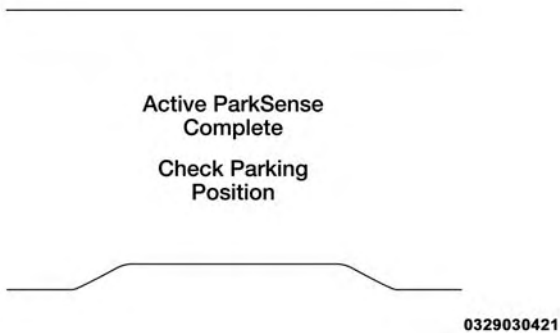

Active ParkSense Complete — Check Parking Position

Perpendicular Parking Space Assistance Operation/Display

When the ParkSense Active Park Assist system is enabled, the "Active ParkSense Searching - Push OK to Switch to Perpendicular" message will show in the instrument cluster display. Push the OK button on the left side steering wheel switch to change your parking space setting to a perpendicular maneuver. You may switch back to parallel parking if you desire.

Once the driver pushes OK for a perpendicular parking maneuver, the "Active ParkSense Searching - Push OK to Switch to Parallel" message will appear in the instrument cluster display.

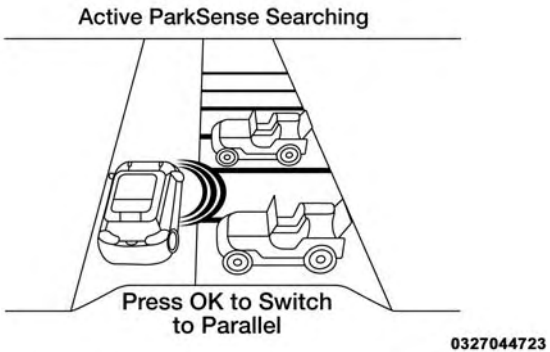

Active ParkSense Searching Display

NOTE:

- When searching for a parking space, use the turn signal indicator to select which side of the vehicle you want to perform the parking maneuver. The ParkSense Active Park Assist system will automatically search for a parking space on the passenger's side of the vehicle if the turn signal is not activated.
- The driver needs to make sure that the selected parking space for the maneuver remains free and clear of any obstructions (e.g. pedestrians, bicycles, etc.).

- The driver is responsible to ensure that the selected parking space is suitable for the maneuver and free/clear of anything that may be overhanging or protruding into the parking space (e.g., ladders, tailgates, etc. from surrounding objects/vehicles).
- When seeking for a parking space, the driver should drive as parallel or perpendicular (depending on the type of maneuver) to other vehicles as possible.
- The feature will only indicate the last detected parking space (example: if passing multiple available parking spaces, the system will only indicate the last detected parking space for the maneuver).

When an available parking space has been found, and the vehicle is not in position, you will be instructed to move forward to position the vehicle for a perpendicular parking sequence.

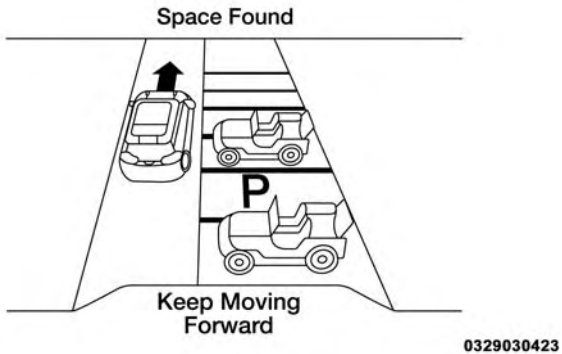

Space Found — Keep Moving Forward

Once the vehicle is in position, you will be instructed to stop the vehicle's movement and remove your hands from the steering wheel.

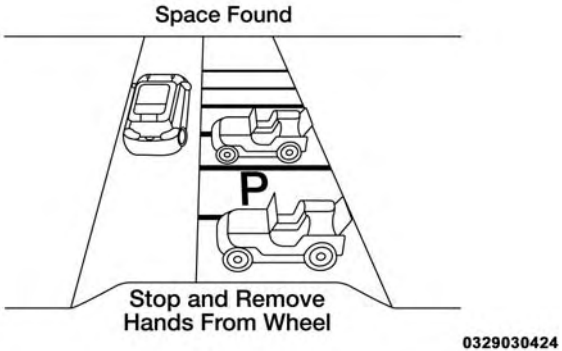

Space Found — Stop And Remove Hands From Wheel

Once the vehicle is at a standstill with your hands removed from the steering wheel, you will be instructed to place the gear selector into the REVERSE position.

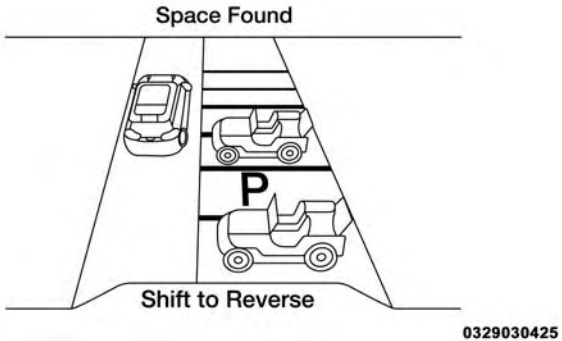

Space Found — Shift To Reverse

When the driver places the gear selector into the REVERSE position, the system may instruct the driver to wait for steering to complete.

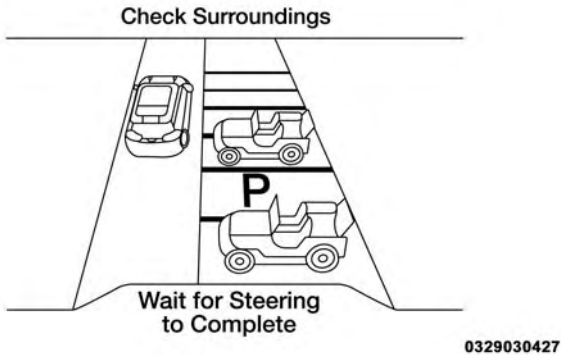

Check Surroundings — Wait For Steering To Complete

The system will then instruct the driver to check their surroundings and move backward.

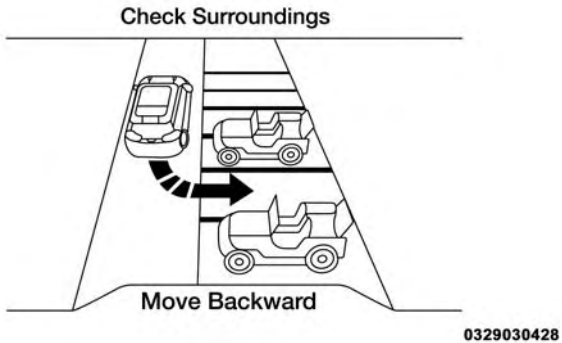

Check Surroundings — Move Backward

NOTE:

- It is the driver's responsibility to use the brake and accelerator during the semi-automatic parking maneuver.
- When the system instructs the driver to remove their hands from the steering wheel, the driver should check their surroundings and begin to back up slowly.

- The ParkSense Active Park Assist system will allow a maximum of six shifts between DRIVE and REVERSE. If the maneuver cannot be completed within six shifts, the system will cancel and the instrument cluster display will instruct the driver to complete the maneuver manually.
- The system will cancel the maneuver if the vehicle speed exceeds 5 mph (7 km/h) during active steering guidance into the parking space. The system will provide a warning to the driver at 3 mph (5 km/h) that tells them to slow down. The driver is then responsible for completing the maneuver if the system is canceled.
- If the system is canceled during the maneuver for any reason, the driver must take control of the vehicle.

When the vehicle has reached the end of its backward movement, the system will instruct the driver to check their surroundings and stop the vehicle's movement.

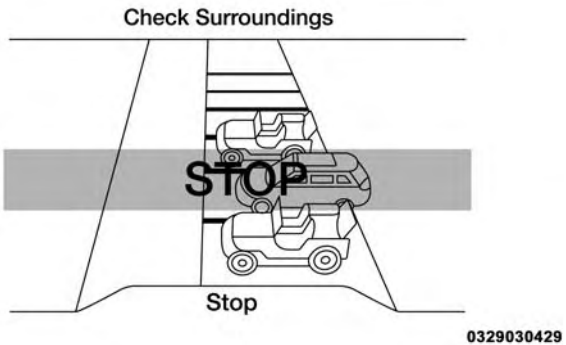

Check Surroundings — STOP

NOTE: It is the driver's responsibility to use the brake and stop the vehicle. The driver should check their surroundings and be prepared to stop the vehicle either when instructed to, or when driver intervention is required.

Once the vehicle is in a standstill condition, the driver will be instructed to place the gear selector into the DRIVE position.

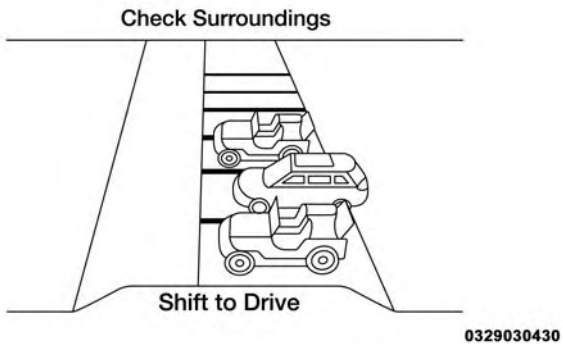

Check Surroundings — Shift To Drive

When the driver places the gear selector into the DRIVE position, the system may instruct the driver to wait for steering to complete.

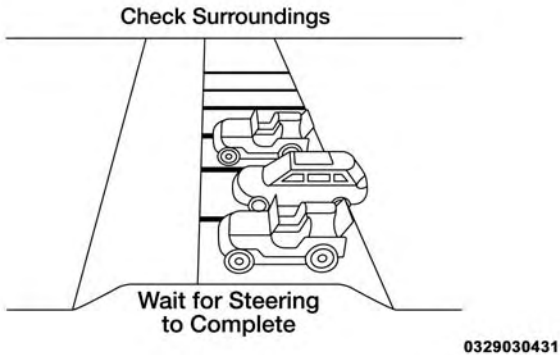

Check Surroundings — Wait For Steering To Complete

The system will then instruct the driver to check their surroundings and move forward.

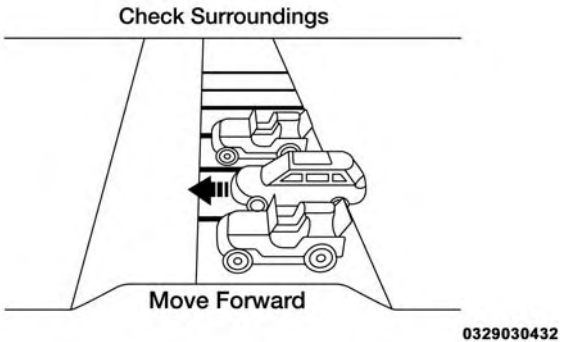

Check Surroundings — Move Forward

When the vehicle has reached the end of its forward movement, the system will instruct the driver to check their surroundings and stop the vehicle's movement.

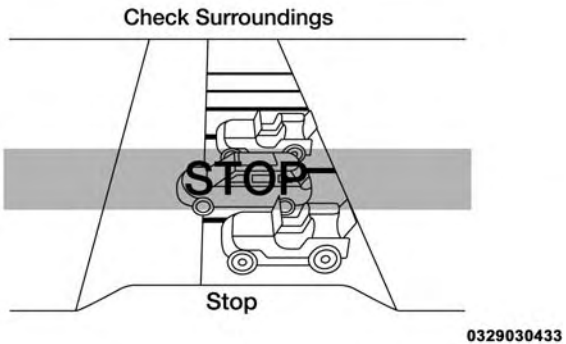

Check Surroundings — STOP

NOTE: It is the driver's responsibility to use the brake and stop the vehicle. The driver should check their surroundings and be prepared to stop the vehicle either when instructed to, or when driver intervention is required.

Once the vehicle is in a standstill condition, the driver will be instructed to place the gear selector into the REVERSE position.

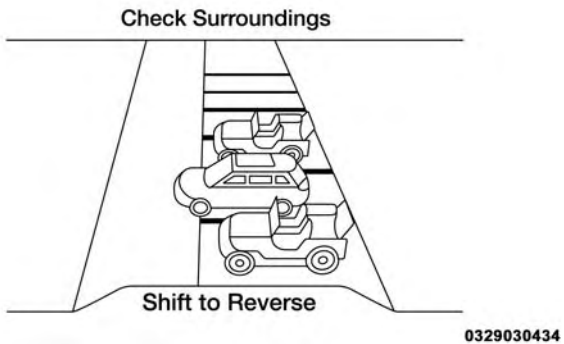

Check Surroundings — Shift To Reverse

When the driver places the gear selector into the REVERSE position, the system may instruct the driver to wait for steering to complete.

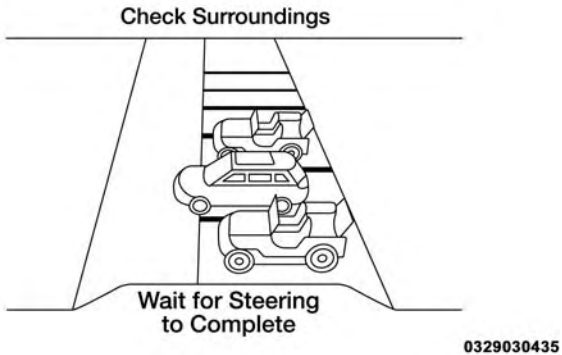

Check Surroundings — Wait For Steering To Complete

The system will then instruct the driver to check their surroundings and move backward.

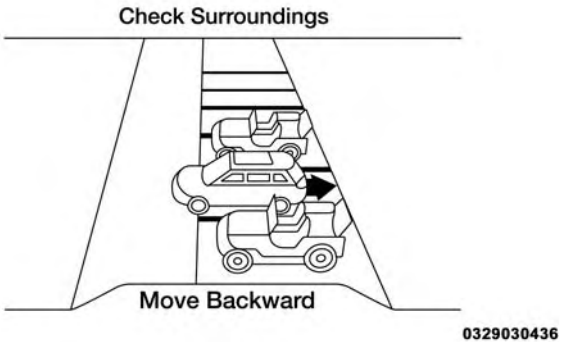

Check Surroundings — Move Backward

Your vehicle is now in the perpendicular park position. When the maneuver is complete, the driver will be instructed to check the vehicle's parking position. If the driver is satisfied with the vehicle position, they should shift to PARK. The "Active ParkSense Complete - Check Parking Position" message will be momentarily displayed.

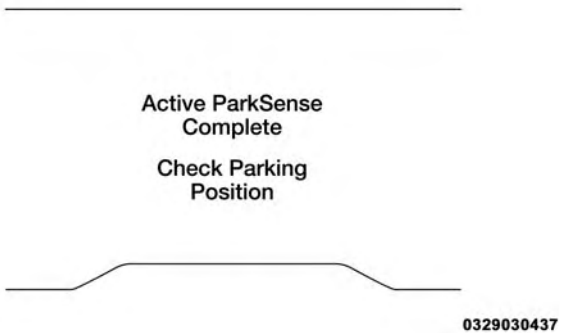

Active ParkSense Complete — Check Parking Position

WARNING!

Drivers must be careful when performing parallel or perpendicular parking maneuvers even when using the ParkSense Active Park Assist system. Always check carefully behind and in front of your vehicle, look behind and in front of you, and be sure to check for pedestrians, animals, other vehicles, obstructions, and blind spots before backing up and moving forward. You are responsible for safety and must continue to pay attention to your surroundings. Failure to do so can result in serious injury or death.

CAUTION!

- **The ParkSense Active Park Assist system is only a parking aid and it is unable to recognize every obstacle, including small obstacles. Parking curbs might be temporarily detected or not detected at all. Obstacles located above or below the sensors will not be detected when they are in close proximity.**
- **The vehicle must be driven slowly when using the ParkSense Active Park Assist system in order to be able to stop in time when an obstacle is detected. It is recommended that the driver looks over his/her shoulder when using the ParkSense Active Park Assist system.**

LANESENSE — IF EQUIPPED

LaneSense Operation

The LaneSense system is operational at speeds above 37 mph (60 km/h) and below 112 mph (180 km/h). The LaneSense system uses a forward looking camera to detect lane markings and measure vehicle position within the lane boundaries.

When both lane markings are detected and the driver unintentionally drifts out of the lane (no turn signal applied), the LaneSense system provides a haptic warning in the form of torque applied to the steering wheel, as well as a visual warning in the instrument cluster display, to prompt the driver to remain within the lane boundaries.

The driver may manually override the haptic warning by applying torque into the steering wheel at any time.

When only a single lane marking is detected and the driver unintentionally drifts across the lane marking (no turn signal applied), the LaneSense system provides a visual warning through the instrument cluster display to prompt the driver to remain within the lane. When only a single lane marking is detected, a haptic (torque) warning will not be provided.

NOTE: When operating conditions have been met, the LaneSense system will monitor if the driver's hands are on the steering wheel and provide an audible and visual warning to the driver when the driver's hands are not detected on the steering wheel. The system will cancel if the driver does not return their hands to the wheel.

Turning LaneSense On Or Off

The default status of LaneSense is “off”.

The LaneSense button is located on the switch panel below the Uconnect display.

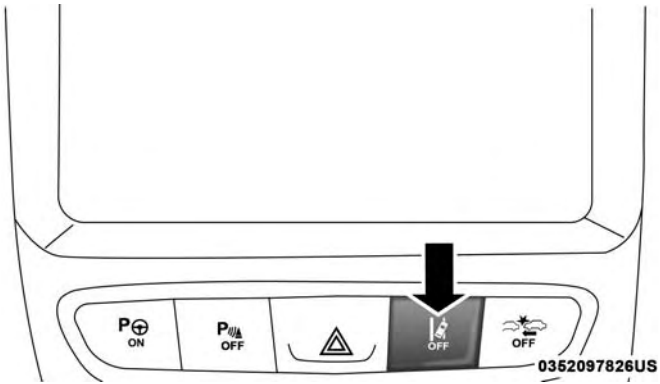

LaneSense On/Off Button

To turn the LaneSense system on, push the LaneSense button (LED turns off). A “LaneSense On” message is shown in the instrument cluster display.

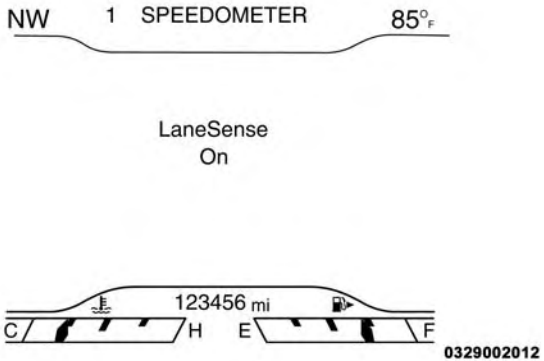

LaneSense On Message

To turn the LaneSense system off, push the LaneSense button once (LED turns on).

NOTE: The LaneSense system will retain the last system state, on or off, from the last ignition cycle when the ignition is changed to the ON/RUN position.

LaneSense Warning Message

The LaneSense system will indicate the current lane drift condition through the instrument cluster display.

Base Instrument Cluster Display — If Equipped

When the LaneSense system is on; the lane lines are gray when both of the lane boundaries have not been detected and the LaneSense telltale is solid white.

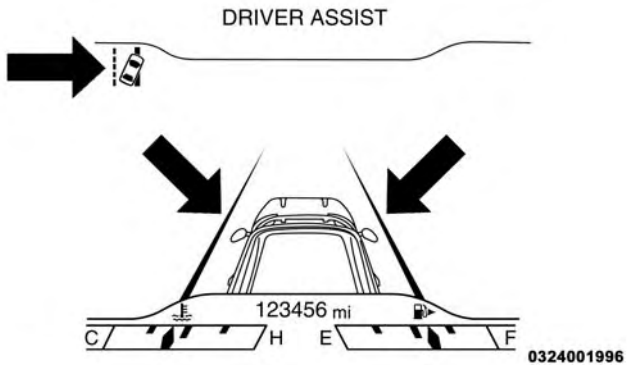

System On (Gray Lines/White Telltale)

Left Lane Departure — Only Left Lane Detected

- When the LaneSense system is on, the LaneSense telltale is solid white when only the left lane marking has been detected and the system is ready to provide visual warnings in the instrument cluster display if an unintentional lane departure occurs.
- When the LaneSense system senses the lane has been approached and is in a lane departure situation, the left thick lane line flashes from white to gray, the left thin line remains solid white and the LaneSense telltale changes from solid white to flashing yellow.

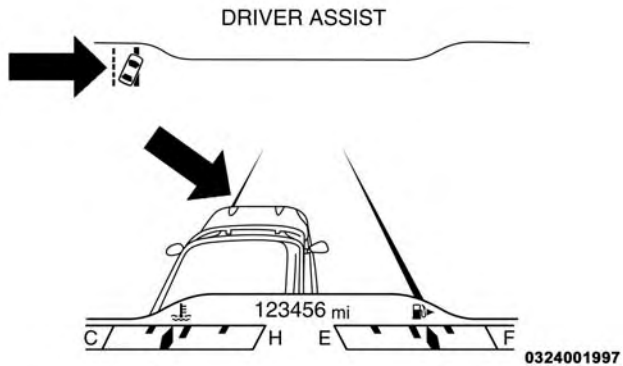

Lane Approached (Flashing White To Gray Thick Line/Flashing Yellow Telltale)

NOTE: The LaneSense system operates with the similar behavior for a right lane departure when only the right lane marking has been detected.

Left Lane Departure — Both Lanes Detected

- When the LaneSense system is on, the lane lines turn from gray to white to indicate that both of the lane markings have been detected. The LaneSense telltale is solid green when both lane markings have been detected and the system is "armed" to provide visual warnings in the instrument cluster display and a torque warning in the steering wheel if an unintentional lane departure occurs.

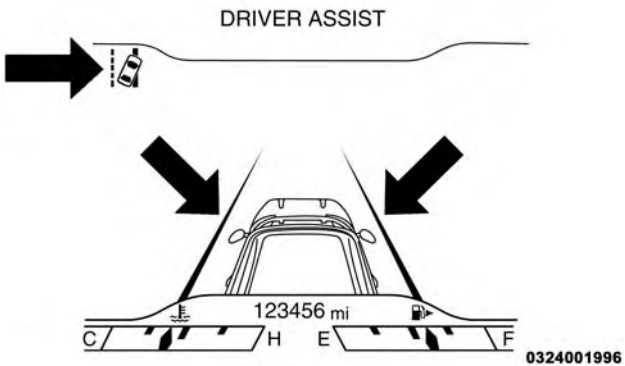

Lanes Sensed (White Lines/Green Telltale)

- When the LaneSense system senses a lane drift situation, the left thick lane line and the left thin line turn solid white. The LaneSense telltale changes from solid green to solid yellow. At this time torque is applied to the steering wheel in the opposite direction of the lane boundary.
- For example: If approaching the left side of the lane the steering wheel will turn to the right.

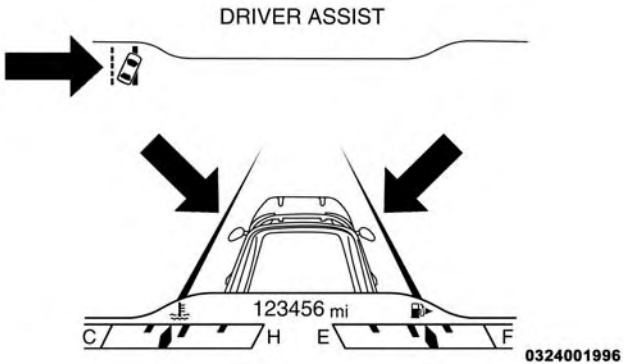

Lane Sensed (Solid White Thick Line, Solid White Thin Line/Solid Yellow Telltale)

- When the LaneSense system senses the lane has been approached and is in a lane departure situation, the left thick lane line flashes from white to gray, the left thin line remains solid white and the LaneSense telltale changes from solid yellow to flashing yellow. At this time torque is applied to the steering wheel in the opposite direction of the lane boundary.
- For example: If approaching the left side of the lane the steering wheel will turn to the right.

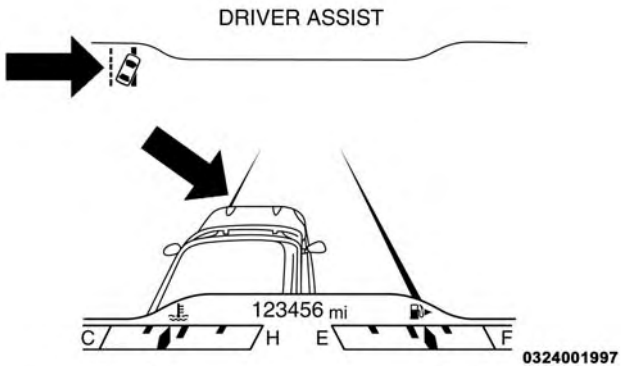

Lane Approached (Flashing White To Gray Thick Line, Solid White Thin Line/Flashing Yellow Telltale)

NOTE: The LaneSense system operates with the similar behavior for a right lane departure.

Premium Instrument Cluster Display — If Equipped

When the LaneSense system is on; the lane lines are gray when both of the lane boundaries have not been detected and the LaneSense telltale is solid white.

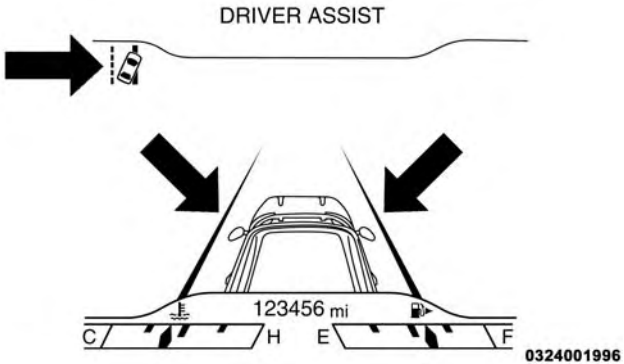

System On (Gray Lines/White Telltale)

Left Lane Departure — Only Left Lane Detected

- When the LaneSense system is on, the LaneSense telltale is solid white when only the left lane marking has been detected and the system is ready to provide visual warnings in the instrument cluster display if an unintentional lane departure occurs.

- When the LaneSense system senses the lane has been approached and is in a lane departure situation, the left thick lane line flashes yellow (on/off), the left thin line remains solid yellow and the LaneSense telltale changes from solid white to flashing yellow.

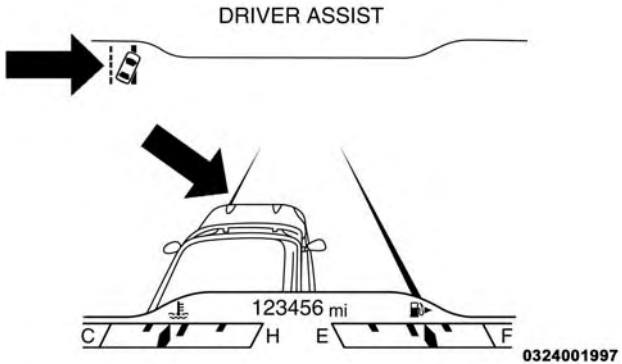

Lane Approached (Flashing Yellow Thick Line, Solid Yellow Thin Line/Flashing Yelow Telltale)

NOTE: The LaneSense system operates with the similar behavior for a right lane departure when only the right lane marking has been detected.

Left Lane Departure — Both Lanes Detected

- When the LaneSense system is on, the lane lines turn from gray to white to indicate that both of the lane markings have been detected. The LaneSense telltale is solid green when both lane markings have been detected and the system is "armed" to provide visual warnings in the instrument cluster display and a torque warning in the steering wheel if an unintentional lane departure occurs.

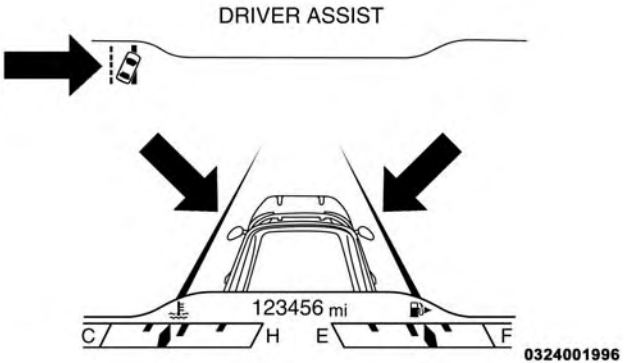

Lanes Sensed (White Lines/Green Telltale)

- When the LaneSense system senses a lane drift situation, the left thick lane line and left thin line turn solid yellow. The LaneSense telltale changes from solid green to solid yellow. At this time torque is applied to the steering wheel in the opposite direction of the lane boundary.

- For example: If approaching the left side of the lane the steering wheel will turn to the right.

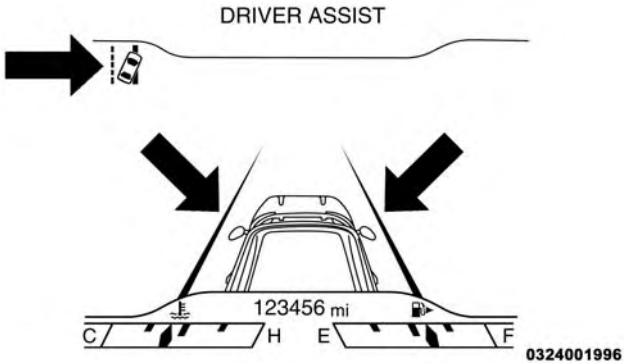

Lane Sensed (Solid Yellow Thick Line, Solid Yellow Thin Line/Solid Yellow Telltale)

- When the LaneSense system senses the lane has been approached and is in a lane departure situation, the left thick lane line flashes yellow (on/off) and the left thin line remains solid yellow. The LaneSense telltale changes from solid yellow to flashing yellow. At this time torque is applied to the steering wheel in the opposite direction of the lane boundary.
- For example: If approaching the left side of the lane the steering wheel will turn to the right.

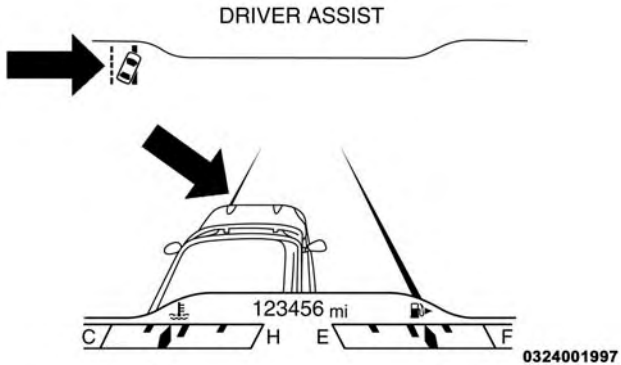

Lane Approached (Flashing Yellow Thick Line, Solid Yellow Thin Line/Flashing Yellow Telltale)

NOTE: The LaneSense system operates with the similar behavior for a right lane departure.

Changing LaneSense Status

The LaneSense system has settings to adjust the intensity of the torque warning and the warning zone sensitivity (early/late) that you can configure through the Uconnect system screen. Refer to “Uconnect Settings” in “Multimedia” for further information.

NOTE:

- When enabled the system operates above 37 mph (60 km/h) and below 112 mph (180 km/h).
- Use of the turn signal suppresses the warnings.
- The system will not apply torque to the steering wheel whenever a safety system engages. (anti-lock brakes, traction control system, electronic stability control, forward collision warning, etc.).

PARKVIEW REAR BACK UP CAMERA — IF EQUIPPED

Your vehicle may be equipped with the ParkView Rear Back Up Camera that allows you to see an on-screen image of the rear surroundings of your vehicle whenever the gear selector is put into REVERSE. The image will be displayed in the touchscreen display along with a caution note to "check entire surroundings" across the top of the screen. After five seconds this note will disappear. The ParkView camera is located on the rear of the vehicle above the rear license plate.

NOTE: The ParkView Rear Back Up Camera has programmable modes of operation that may be selected through the Uconnect System. Refer to "Uconnect Settings" in "Multimedia" for further information.

When the vehicle is shifted out of REVERSE (with camera delay turned off), the rear camera mode is exited and the previous screen appears again. When the vehicle is shifted out of REVERSE (with camera delay turned on), the camera image will continue to be displayed for up to ten seconds after shifting out of REVERSE unless the vehicle speed exceeds 8 mph (13 km/h), the vehicle is shifted into PARK or the vehicle's ignition is cycled to the OFF position.

When enabled, active guide lines are overlaid on the image to illustrate the width of the vehicle and its projected backup path based on the steering wheel position. A dashed center line overlay indicates the center of the vehicle to assist with parking or aligning to a hitch/receiver.

When enabled, fixed guide lines are overlaid on the image to illustrate the width of the vehicle.

Different colored zones indicate the distance to the rear of the vehicle.

The following table shows the approximate distances for each zone:

Zone	Distance To The Rear Of The Vehicle
Red	0 - 1 ft (0 - 30 cm)
Yellow	1 ft - 6.5 ft (30 cm - 2 m)
Green	6.5 ft or greater (2 m or greater)

WARNING!

Drivers must be careful when backing up even when using the ParkView Rear Back Up Camera. Always check carefully behind your vehicle, and be sure to check for pedestrians, animals, other vehicles, obstructions, or blind spots before backing up. You are responsible for the safety of your surroundings and must continue to pay attention while backing up. Failure to do so can result in serious injury or death.

CAUTION!

- **To avoid vehicle damage, ParkView should only be used as a parking aid. The ParkView camera is**

(Continued)

CAUTION! ***(Continued)***

unable to view every obstacle or object in your drive path.

- **To avoid vehicle damage, the vehicle must be driven slowly when using ParkView to be able to stop in time when an obstacle is seen. It is recommended that the driver look frequently over his/her shoulder when using ParkView.**

NOTE: If snow, ice, mud, or any foreign substance builds up on the camera lens, clean the lens, rinse with water, and dry with a soft cloth. Do not cover the lens.

REFUELING THE VEHICLE

The gas cap is located behind the fuel filler door, on the passenger side of the vehicle. If the gas cap is lost or damaged, be sure the replacement cap has been designed for use with this vehicle.

NOTE: When removing the fuel filler cap, lay the cap tether in the hook, located on the fuel filler door reinforcement.

1. Push the fuel filler door release switch (located on the driver's side door trim).

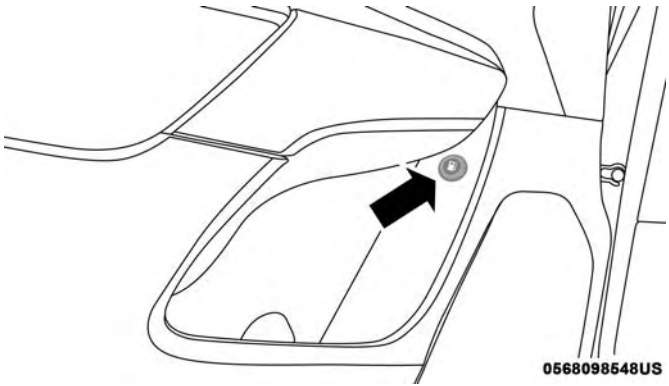

Fuel Filler Door Release Switch

2. Open the fuel filler door, and remove the fuel filler cap.

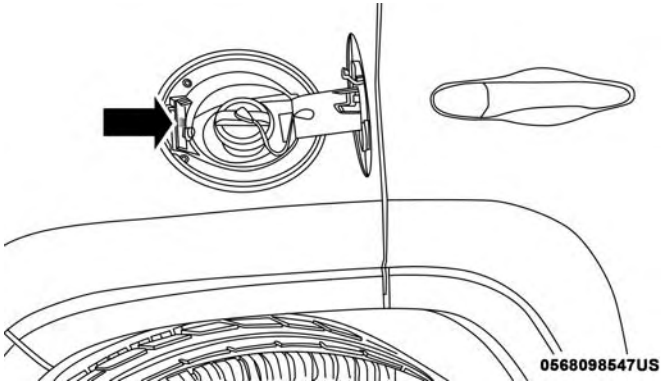

Fuel Filler Cap (Gas Cap)

NOTE:

- In certain cold conditions, ice may prevent the fuel door from opening. If this occurs, lightly push on the fuel door to break the ice buildup and re-release the fuel door using the inside release button. Do not pry on the door.
- When the fuel nozzle "clicks" or shuts off, the fuel tank is full.
- Tighten the gas cap about one quarter turn until you hear one click. This is an indication that the cap is properly tightened.

- If the gas cap is not tightened properly, the Malfunction Indicator Light (MIL) will come on. Be sure the gas cap is tightened every time the vehicle is refueled.

CAUTION!

- **Damage to the fuel system or emission control system could result from using an improper fuel filler cap. A poorly fitting cap could let impurities into the fuel system. Also, a poorly fitting aftermarket cap can cause the "Malfunction Indicator Light (MIL)" to illuminate, due to fuel vapors escaping from the system.**
- **A poorly fitting fuel filler cap may cause the MIL to turn on.**
- **To avoid fuel spillage and overfilling, do not "top off" the fuel tank after filling.**
- **If fuel is spilled on surface on the paint, clear it immediately to avoid damage the paint.**

WARNING!

- **Never have any smoking materials lit in or near the vehicle when the gas cap is removed or the tank is being filled.**

(Continued)

WARNING! ***(Continued)***

- **Never add fuel when the engine is running. This is in violation of most state and federal fire regulations and may cause the MIL to turn on.**
- **A fire may result if gasoline is pumped into a portable container that is inside of a vehicle. You could be burned. Always place gas containers on the ground while filling.**

VEHICLE LOADING

Certification Label

As required by National Highway Traffic Safety Administration regulations, your vehicle has a certification label affixed to the driver's side door or pillar.

This label contains the month and year of manufacture, Gross Vehicle Weight Rating (GVWR), Gross Axle Weight Rating (GAWR) front and rear, and Vehicle Identification Number (VIN). A Month-Day-Hour (MDH) number is included on this label and indicates the Month, Day and Hour of manufacture. The bar code that appears on the bottom of the label is your VIN.

Gross Vehicle Weight Rating (GVWR)

The GVWR is the total permissible weight of your vehicle including driver, passengers, vehicle, options and cargo. The label also specifies maximum capacities of front and rear axle systems (GAWR). Total load must be limited so GVWR and front and rear GAWR are not exceeded.

Payload

The payload of a vehicle is defined as the allowable load weight a truck can carry, including the weight of the driver, all passengers, options and cargo.

Gross Axle Weight Rating (GAWR)

The GAWR is the maximum permissible load on the front and rear axles. The load must be distributed in the cargo area so that the GAWR of each axle is not exceeded.

Each axle GAWR is determined by the components in the system with the lowest load carrying capacity (axle, springs, tires or wheels). Heavier axles or suspension components sometimes specified by purchasers for increased durability does not necessarily increase the vehicle's GVWR.

Tire Size

The tire size on the Vehicle Certification Label represents the actual tire size on your vehicle. Replacement tires must be equal to the load capacity of this tire size.

Rim Size

This is the rim size that is appropriate for the tire size listed.

Inflation Pressure

This is the cold tire inflation pressure for your vehicle for all loading conditions up to full GAWR.

Curb Weight

The curb weight of a vehicle is defined as the total weight of the vehicle with all fluids, including vehicle fuel, at full capacity conditions, and with no occupants or cargo loaded into the vehicle. The front and rear curb weight values are determined by weighing your vehicle on a commercial scale before any occupants or cargo are added.

Loading

The actual total weight and the weight of the front and rear of your vehicle at the ground can best be determined by weighing it when it is loaded and ready for operation.

The entire vehicle should first be weighed on a commercial scale to insure that the GVWR has not been exceeded. The weight on the front and rear of the vehicle should then be determined separately to be sure that the load is properly distributed over the front and rear axle. Weighing the vehicle may show that the GAWR of either the front or rear axles has been exceeded but the total load is within the specified GVWR. If so, weight must be shifted from front to rear or rear to front as appropriate until the specified weight limitations are met. Store the heavier items down low and be sure that the weight is distributed equally. Stow all loose items securely before driving.

Improper weight distributions can have an adverse effect on the way your vehicle steers and handles and the way the brakes operate.

CAUTION!

Do not load your vehicle any heavier than the GVWR or the maximum front and rear GAWR. If you do, parts on your vehicle can break, or it can change the way your vehicle handles. This could cause you to lose control. Also overloading can shorten the life of your vehicle.

TRAILER TOWING

In this section you will find safety tips and information on limits to the type of towing you can reasonably do with your vehicle. Before towing a trailer, carefully review this information to tow your load as efficiently and safely as possible.

To maintain the New Vehicle Limited Warranty coverage, follow the requirements and recommendations in this manual concerning vehicles used for trailer towing.

Common Towing Definitions

The following trailer towing related definitions will assist you in understanding the following information:

Gross Vehicle Weight Rating (GVWR)

The GVWR is the total allowable weight of your vehicle. This includes driver, passengers, cargo and tongue weight. The total load must be limited so that you do not exceed the GVWR. Refer to “Vehicle Loading/Vehicle Certification Label” in “Starting And Operating” for further information.

Gross Trailer Weight (GTW)

The GTW is the weight of the trailer plus the weight of all cargo, consumables, and equipment (permanent or temporary) loaded in or on the trailer in its "loaded and ready for operation" condition.

The recommended way to measure GTW is to put your fully loaded trailer on a vehicle scale. The entire weight of the trailer must be supported by the scale.

WARNING!

If the Gross Trailer Weight (GTW) is 3,500 lbs (1 587 kg) or more, it is mandatory to use a weight-distributing hitch to ensure stable handling of your vehicle. If you use a standard weight-carrying hitch, you could lose control of your vehicle and cause a collision.

Gross Combination Weight Rating (GCWR)

The GCWR is the total allowable weight of your vehicle and trailer when weighed in combination.

Gross Axle Weight Rating (GAWR)

The GAWR is the maximum capacity of the front and rear axles. Distribute the load over the front and rear axles evenly. Make sure that you do not exceed either front or rear GAWR. Refer to "Vehicle Loading/Vehicle Certification Label" in "Starting And Operating" for further information.

WARNING!

It is important that you do not exceed the maximum front or rear GAWR. A dangerous driving condition can result if either rating is exceeded. You could lose control of the vehicle and have a collision.

Tongue Weight (TW)

The tongue weight is the downward force exerted on the hitch ball by the trailer. You must consider this as part of the load on your vehicle.

Trailer Frontal Area

The frontal area is the maximum height multiplied by the maximum width of the front of a trailer.

Trailer Sway Control

The trailer sway control can be a mechanical telescoping link that can be installed between the hitch receiver and the trailer tongue that typically provides adjustable friction associated with the telescoping motion to dampen any unwanted trailer swaying motions while traveling.

If equipped, the electronic Trailer Sway Control (TSC) recognizes a swaying trailer and automatically applies individual wheel brakes and/or reduces engine power to attempt to eliminate the trailer sway.

Weight-Carrying Hitch

A weight-carrying hitch supports the trailer tongue weight, just as if it were luggage located at a hitch ball or some other connecting point of the vehicle. These kinds of hitches are the most popular on the market today and they are commonly used to tow small and medium sized trailers.

Weight-Distributing Hitch

A weight-distributing system works by applying leverage through spring (load) bars. They are typically used for heavier loads to distribute trailer tongue weight to the tow vehicle's front axle and the trailer axle(s). When used in accordance with the manufacturer's directions, it provides for a more level ride, offering more consistent steering and brake control thereby enhancing towing safety. The addition of a friction/hydraulic sway control also dampens sway caused by traffic and crosswinds and contributes positively to tow vehicle and trailer stability. Trailer sway control and a weight distributing (load equalizing) hitch are recommended for heavier Tongue Weights (TW) and may be required depending on vehicle and trailer configuration/loading to comply with Gross Axle Weight Rating (GAWR) requirements.

WARNING!

- **An improperly adjusted Weight Distributing Hitch system may reduce handling, stability, braking performance, and could result in a collision.**
- **Weight Distributing Systems may not be compatible with Surge Brake Couplers. Consult with your hitch and trailer manufacturer or a reputable Recreational Vehicle dealer for additional information.**

Trailer Hitch Classification

The following chart provides the industry standard for the maximum trailer weight a given trailer hitch class can tow and should be used to assist you in selecting the correct trailer hitch for your intended towing condition.

Trailer Hitch Classification Definitions	
Class	**Max. Trailer Hitch Industry Standards**
Class I - Light Duty	2,000 lbs (907 kg)
Class II - Medium Duty	3,500 lbs (1,587 kg)
Class III - Heavy Duty	5,000 lbs (2,267 kg)
Class IV - Extra Heavy Duty	10,000 lbs (4,535 kg)
Refer to the "Trailer Towing Weights (Maximum Trailer Weight Ratings)" chart for the Maximum Gross Trailer Weight (GTW) towable for your given drivetrain.	
All trailer hitches should be professionally installed on your vehicle.	

Trailer Towing Weights (Maximum Trailer Weight Ratings)

Engine/Transmission	Model	Frontal Area	Maximum GTW (Gross Trailer Wt.)	Maximum Tongue Wt. (See Note)
2.4L/Automatic with or without Trailer Tow Package	FWD or 4WD	32 sq ft (2.97 sq m)	2,000 lbs (907 kg)	200 lbs (90 kg)
3.2L/Automatic	FWD or 4WD	32 sq ft (2.97 sq m)	2,000 lbs (907 kg)	200 lbs (90 kg)
3.2L/Automatic with Trailer Tow Package	FWD or 4WD	39.44 sq ft (3.66 sq m)	4,500 lbs (2,041 kg)	450 lbs (204 kg)
Refer to local laws for maximum trailer towing speeds.				
NOTE: The trailer tongue weight must be considered as part of the combined weight of occupants and cargo, and should never exceed the weight referenced on the Tire and Loading Information placard.				

Trailer And Tongue Weight

Never exceed the maximum tongue weight stamped on your bumper or trailer hitch.

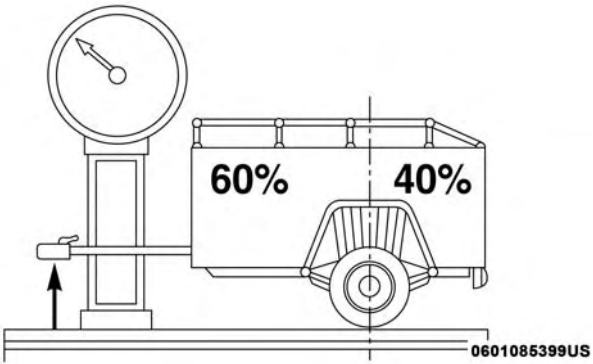

Consider the following items when computing the weight on the rear axle of the vehicle:

- The tongue weight of the trailer.
- The weight of any other type of cargo or equipment put in or on your vehicle.
- The weight of the driver and all passengers.

NOTE: Remember that everything put into or on the trailer adds to the load on your vehicle. Also, additional factory-installed options or dealer-installed options must be considered as part of the total load on your vehicle. Refer to the "Tire And Loading Information" placard for the maximum combined weight of occupants and cargo for your vehicle.

Towing Requirements

To promote proper break-in of your new vehicle drivetrain components, the following guidelines are recommended:

WARNING!

Improper towing can lead to a collision. Follow these guidelines to make your trailer towing as safe as possible:

- **Make certain that the load is secured in the trailer and that it will not shift during travel. When trailering cargo that is not fully secured, dynamic load shifts can occur that may be difficult for the driver to control. You could lose control of your vehicle and have a collision.**

(Continued)

WARNING! *(Continued)*

- **When hauling cargo, or towing a trailer, do not overload your vehicle or trailer. Overloading can cause a loss of control, poor performance, or damage to brakes, axle, engine, transmission, steering, suspension, chassis structure, or tires.**
- **Safety chains must always be used between your vehicle and trailer. Always connect the chains to the frame or hook retainers of the vehicle hitch. Cross the chains under the trailer tongue and allow enough slack for turning corners.**
- **Vehicles with trailers should not be parked on a grade. When parking, apply the parking brake on the tow vehicle. Put the tow vehicle transmission in PARK. Always block or "chock" the trailer wheels.**
- **GCWR must not be exceeded.**
- **Total weight must be distributed between the tow vehicle and the trailer such that the following four ratings are not exceeded:**

  1. **GVWR**
  2. **GTW**
  3. **GAWR**
  4. **Tongue weight rating for the trailer hitch utilized.**

CAUTION!

- **Do not tow a trailer at all during the first 500 miles (805 km) the new vehicle is driven. The engine, axle or other parts could be damaged.**
- **Then, during the first 500 miles (805 km) that a trailer is towed, do not drive over 50 mph (80 km/h) and do not make starts at full throttle. This helps the engine and other parts of the vehicle wear in at the heavier loads.**

Towing Requirements — Tires

- Do not attempt to tow a trailer while using a compact spare tire.
- Proper tire inflation pressures are essential to the safe and satisfactory operation of your vehicle. Refer to "Tires" in "Servicing And Maintenance" for proper tire inflation procedures.
- Check the trailer tires for proper tire inflation pressures before trailer usage.
- Check for signs of tire wear or visible tire damage before towing a trailer. Refer to "Tires" in "Servicing And Maintenance" for the proper inspection procedure.

- When replacing tires, refer to "Tires" in "Servicing And Maintenance" for the proper tire replacement procedures. Replacing tires with a higher load carrying capacity will not increase the vehicle's GVWR and GAWR limits.

Towing Requirements — Trailer Brakes

- Do **not** interconnect the hydraulic brake system or vacuum system of your vehicle with that of the trailer. This could cause inadequate braking and possible personal injury.
- An electronically actuated trailer brake controller is required when towing a trailer with electronically actuated brakes. When towing a trailer equipped with a hydraulic surge actuated brake system, an electronic brake controller is not required.
- Trailer brakes are recommended for trailers over 1,000 lbs (453 kg) and required for trailers in excess of 2,000 lbs (907 kg).

WARNING!

- **Do not connect trailer brakes to your vehicle's hydraulic brake lines. It can overload your brake system and cause it to fail. You might not have brakes when you need them and could have a collision.**
- **Towing any trailer will increase your stopping distance. When towing you should allow for additional space between your vehicle and the vehicle in front of you. Failure to do so could result in a collision.**

CAUTION!

If the trailer weighs more than 1,000 lbs (453 kg) loaded, it should have its own brakes and they should be of adequate capacity. Failure to do this could lead to accelerated brake lining wear, higher brake pedal effort, and longer stopping distances.

Towing Requirements — Trailer Lights And Wiring

Whenever you pull a trailer, regardless of the trailer size, stoplights and turn signals on the trailer are required for motoring safety.

The Trailer Tow Package may include a four- and seven-pin wiring harness. Use a factory approved trailer harness and connector.

NOTE: Do not cut or splice wiring into the vehicle's wiring harness.

The electrical connections are all complete to the vehicle but you must mate the harness to a trailer connector. Refer to the following illustrations.

NOTE:

- Disconnect trailer wiring connector from the vehicle before launching a boat (or any other device plugged into vehicle's electrical connect) into water.
- Be sure to reconnect after clear from water area.

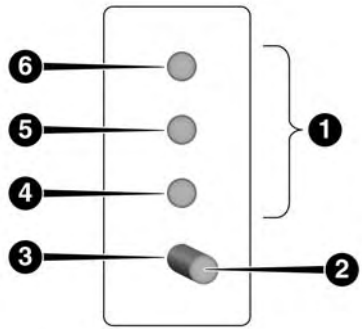

0601085400US

Four-Pin Connector

1 — Female Pins	4 — Park
2 — Male Pin	5 — Left Stop/Turn
3 — Ground	6 — Right Stop/Turn

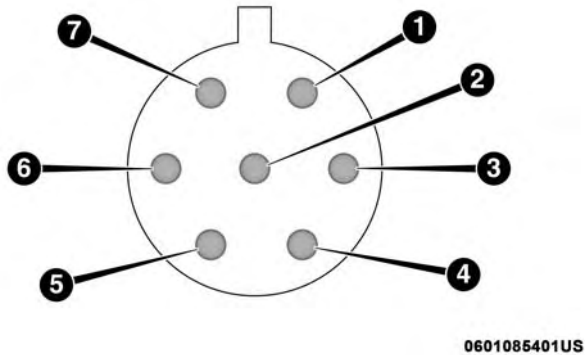

Seven-Pin Connector

1 — Battery	5 — Ground
2 — Backup Lamps	6 — Left Stop/Turn
3 — Right Stop/Turn	7 — Running Lamps
4 — Electric Brakes	

Towing Tips

Before setting out on a trip, practice turning, stopping, and backing up the trailer in an area located away from heavy traffic.

Automatic Transmission

The DRIVE range can be selected when towing. The transmission controls include a drive strategy to avoid frequent shifting when towing. However, if frequent shifting does occur while in DRIVE, use the Electronic Range Select (ERS) shift control to select a lower gear range.

NOTE: Using a lower gear range while operating the vehicle under heavy loading conditions will improve performance and extend transmission life by reducing excessive shifting and heat build up. This action will also provide better engine braking.

Electronic Speed Control — If Equipped

- Do not use in hilly terrain or with heavy loads.
- When using the speed control, if you experience speed drops greater than 10 mph (16 km/h), disengage until you can get back to cruising speed.
- Use speed control in flat terrain and with light loads to maximize fuel efficiency.

Cooling System

To reduce potential for engine and transmission overheating, take the following actions:

City Driving

When stopped for short periods, shift the transmission into NEUTRAL and increase engine idle speed.

Highway Driving

Reduce speed.

Air Conditioning

Turn off temporarily.

RECREATIONAL TOWING (BEHIND MOTORHOME, ETC.)

Towing This Vehicle Behind Another Vehicle

			4X4 Models	
Towing Condition	**Wheels OFF the Ground**	**Front-Wheel Drive (FWD) Models**	**1-Speed Power Transfer Unit**	**2-Speed Power Transfer Unit**
Flat Tow	NONE	**NOT ALLOWED**	**NOT ALLOWED**	**See Instructions:** • Before towing, see your authorized dealer for the Mopar flat tow wiring kit • It is recommended to charge the battery of the towed vehicle during recreational towing • Transmission in **PARK** • Power transfer unit in **NEUTRAL (N)** • Tow in **forward** direction

			4X4 Models	
Towing Condi-tion	**Wheels OFF the Ground**	**Front-Wheel Drive (FWD) Models**	**1-Speed Power Transfer Unit**	**2-Speed Power Transfer Unit**
Dolly Tow	Front	OK	**NOT AL-LOWED**	**NOT ALLOWED**
	Rear	**NOT AL-LOWED**	**NOT AL-LOWED**	**NOT ALLOWED**
On Trailer	ALL	OK	OK	OK

NOTE:

- You must ensure that the Auto Park Brake feature is disabled before towing this vehicle, to avoid inadvertent Electric Park Brake engagement. The Auto Park Brake feature is enabled or disabled via the customer programmable features in the Uconnect Settings.
- When towing your vehicle, always follow applicable state and provincial laws. Contact state and provincial Highway Safety offices for additional details.

Recreational Towing — Front-Wheel Drive (FWD) Models

DO NOT flat tow this vehicle. Damage to the drivetrain will result.

Recreational towing (for front-wheel drive models) is allowed ONLY if the front wheels are **OFF** the ground. This may be accomplished using a tow dolly or vehicle trailer. If using a tow dolly, follow this procedure:

1. Properly secure the dolly to the tow vehicle, following the dolly manufacturer's instructions.
2. Drive the front wheels onto the tow dolly.
3. Apply the parking brake. Place transmission in PARK. Turn the engine OFF.
4. Properly secure the front wheels to the dolly, following the dolly manufacturer's instructions.
5. Turn the ignition to the ON/RUN mode, but do not start the engine.
6. Press and hold the brake pedal.
7. Release the parking brake.
8. Turn the ignition OFF, remove the key fob, and release the brake pedal.

CAUTION!

- **Towing with the front wheels on the ground will cause severe transmission damage. Damage from improper towing is not covered under the New Vehicle Limited Warranty.**
- **Ensure that the Electric Park Brake is released, and remains released, while being towed.**

Recreational Towing — 4x4 Models With 1-Speed Power Transfer Unit

Recreational towing is not allowed. These models do not have a NEUTRAL (N) position in the power transfer unit.

NOTE: This vehicle may be towed on a flatbed or vehicle trailer provided all four wheels are OFF the ground.

CAUTION!

Towing this vehicle with ANY of its wheels on the ground can cause severe transmission and/or power transfer unit damage. Damage from improper towing is not covered under the New Vehicle Limited Warranty.

Recreational Towing — 4x4 Models With 2-Speed Power Transfer Unit

The power transfer unit must be shifted into NEUTRAL (N) and the transmission must be in PARK for recreational towing. The NEUTRAL (N) selection button is adjacent to the 4WD selector switch. Shifts into and out of NEUTRAL (N) can take place with the selector switch in any mode position.

CAUTION!

- **Failure to use the proper Mopar wiring kit to power the steering system during recreational towing may damage the vehicle's steering system and/or other vehicle components.**

(Continued)

CAUTION! *(Continued)*

- **DO NOT dolly tow any 4x4 vehicle. Towing with only one set of wheels on the ground (front or rear) will cause severe transmission and/or power transfer unit damage. Tow with all four wheels either ON the ground, or OFF the ground (using a vehicle trailer).**
- **Tow only in a forward direction. Towing this vehicle backwards can cause severe damage to the power transfer unit.**
- **The transmission must be in PARK for recreational towing.**
- **Before recreational towing, perform the procedure outlined under "Shifting into NEUTRAL (N)" to be certain that the power transfer unit is fully in NEUTRAL (N). Otherwise, internal damage will result.**
- **Towing this vehicle in violation of the above requirements can cause severe transmission and/or power transfer unit damage. Damage from improper towing is not covered under the New Vehicle Limited Warranty.**
- **Ensure that the Electric Park Brake is released, and remains released, while being towed.**
- **Do not use a bumper-mounted clamp-on tow bar on your vehicle. The bumper face bar will be damaged.**

Shifting Into NEUTRAL (N)

WARNING!

You or others could be injured or killed if you leave the vehicle unattended with the power transfer unit in the NEUTRAL (N) position without first fully engaging the parking brake. The NEUTRAL (N) position disengages both the front and rear driveshafts from the powertrain and will allow the vehicle to roll, even if the transmission is in PARK. The parking brake should always be applied when the driver is not in the vehicle.

Use the following procedure to shift the 4WD system into NEUTRAL (N).

CAUTION!

It is necessary to follow these steps to be certain that the power transfer unit is fully in NEUTRAL (N) before recreational towing to prevent damage to internal parts.

1. Bring the vehicle to a complete stop on level ground, and shift the transmission to PARK.
2. Turn the engine OFF.
3. Turn the ignition to the ON/RUN mode, but do not start the engine.
4. Press and hold the brake pedal.
5. Shift the transmission into NEUTRAL.
6. Using a ballpoint pen or similar object, push and hold the recessed NEUTRAL (N) button (located by the selector switch) for four seconds. The light behind the N symbol will blink, indicating shift in progress. The light will stop blinking (stay on solid) when the shift to NEUTRAL (N) is complete.

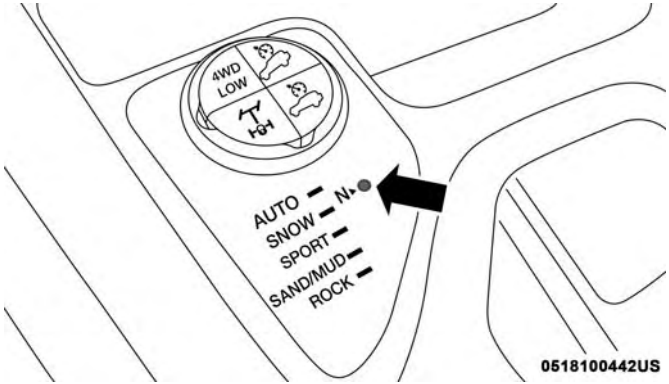

Neutral Button

7. After the shift is completed and the NEUTRAL (N) light stays on, release the NEUTRAL (N) button.
8. Start the engine.
9. Release the parking brake.
10. Shift the transmission into REVERSE.
11. Release the brake pedal for five seconds and ensure that there is no vehicle movement.
12. Shift the transmission to NEUTRAL.
13. Apply the parking brake.
14. Shift the transmission into PARK, turn the engine OFF, and remove the key fob.
15. Attach the vehicle to the tow vehicle using a suitable tow bar.
16. Turn the ignition to the ON/RUN mode, but do not start the engine.
17. Press and hold the brake pedal.
18. Release the parking brake.
19. Turn the ignition OFF, remove the key fob, and release the brake pedal.

NOTE:

- Steps 1 through 5 are requirements that must be met before pushing the NEUTRAL (N) button, and must continue to be met until the shift has been completed. If any of these requirements are not met before pushing the NEUTRAL (N) button or are no longer met during the shift, then the NEUTRAL (N) indicator light will flash continuously until all requirements are met or until the NEUTRAL (N) button is released.
- The ignition must be in the ON/RUN mode for a shift to take place and for the position indicator lights to be

operable. If the ignition is not in the ON/RUN mode, the shift will not take place and no position indicator lights will be on or flashing.

- A flashing NEUTRAL (N) position indicator light indicates that shift requirements have not been met.

Shifting Out Of NEUTRAL (N)

Use the following procedure to prepare your vehicle for normal usage.

1. Bring the vehicle to a complete stop, leaving it connected to the tow vehicle.
2. Apply the parking brake.
3. Turn the ignition to the ON/RUN mode, but do not start the engine.
4. Press and hold the brake pedal.
5. Shift the transmission into NEUTRAL.
6. Using a ballpoint pen or similar object, push and hold the recessed power transfer unit NEUTRAL (N) button (located by the selector switch) for one second.

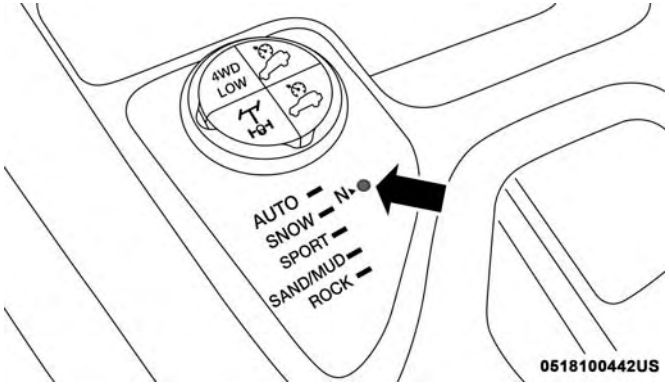

Neutral Button

7. When the NEUTRAL (N) indicator light turns off, release the NEUTRAL (N) button.
8. After the NEUTRAL (N) button has been released, the power transfer unit will shift to the position indicated by the selector switch.

NOTE: When shifting the power transfer unit out of NEUTRAL (N), the engine should remain OFF to avoid gear clash.

9. Shift the transmission into PARK.
10. Release the brake pedal.

11. Disconnect vehicle from the tow vehicle.
12. Start the engine.
13. Press and hold the brake pedal.
14. Release the parking brake.
15. Shift the transmission into DRIVE, release the brake pedal, and check that the vehicle operates normally.
16. Re-enable the Auto Park Brake feature, if desired.

NOTE:

- Steps 1 through 5 are requirements that must be met before pushing the NEUTRAL (N) button, and must continue to be met until the shift has been completed. If any of these requirements are not met before pushing the NEUTRAL (N) button or are no longer met during the shift, the NEUTRAL (N) indicator light will flash continuously until all requirements are met or until the NEUTRAL (N) button is released.
- The ignition must be in the ON/RUN mode for a shift to take place and for the position indicator lights to be operable. If the ignition is not in the ON/RUN mode, the shift will not take place and no position indicator lights will be on or flashing.
- A flashing NEUTRAL (N) position indicator light indicates that shift requirements have not been met.

DRIVING TIPS

On-Road Driving Tips

Utility vehicles have higher ground clearance and a narrower track to make them capable of performing in a wide variety of off-road applications. Specific design characteristics give them a higher center of gravity than conventional passenger cars.

An advantage of the higher ground clearance is a better view of the road, allowing you to anticipate problems. They are not designed for cornering at the same speeds as conventional passenger cars any more than low-slung sports cars are designed to perform satisfactorily in off-road conditions. Avoid sharp turns or abrupt maneuvers. As with other vehicles of this type, failure to operate this vehicle correctly may result in loss of control or vehicle rollover.

Off-Road Driving Tips

When To Use 4WD LOW Range

When off-road driving, shift to 4WD LOW for additional traction and control on slippery or difficult terrain, ascending or descending steep hills, and to increase low-speed pulling power (refer to "All Wheel Drive and Four-Wheel Drive Operation" in this section for further details). This range should be limited to extreme situations such as deep snow, mud, or sand where additional low speed pulling power is needed. Vehicle speeds in excess of 25 mph (40 km/h) should be avoided when in 4WD LOW range.

Driving Through Water

Although your vehicle is capable of driving through water, there are a number of precautions that must be considered before entering the water:

CAUTION!

When driving through water, do not exceed 5 mph (8 km/h). Always check water depth before entering as a precaution, and check all fluids afterward. Driving through water may cause damage that may not be covered by the New Vehicle Limited Warranty.

Driving through water more than a few inches/centimeters deep will require extra caution to ensure safety and prevent damage to your vehicle. If you must drive through water, try to determine the depth and the bottom condition (and location of any obstacles) prior to entering. Proceed with caution and maintain a steady controlled speed less than 5 mph (8 km/h) in deep water to minimize wave effects.

Flowing Water

If the water is swift flowing and rising (as in storm run-off) avoid crossing until the water level recedes and/or the flow rate is reduced. If you must cross flowing-water, avoid depths in excess of 9 inches (22 cm). The flowing water can erode the streambed causing your vehicle to sink into deeper water. Determine exit point(s) that are downstream of your entry point to allow for drifting.

Standing Water

Avoid driving in standing water deeper than 16 inches (40.5 cm), and reduce speed appropriately to minimize wave effects. Maximum speed in 16 inches (40.5 cm) of water is less than 5 mph (8 km/h).

(Trailhawk only): Avoid driving in standing water deeper than 19 inches (48 cm), and reduce speed appropriately to minimize wave effects. Maximum speed in 19 inches (48 cm) of water is less than 5 mph (8 km/h).

Maintenance

After driving through deep water, inspect your vehicle fluids and lubricants (engine, transmission, Power Transfer Unit, and Rear Drive Module) to assure they have not been contaminated. Contaminated fluids and lubricants (milky, foamy in appearance) should be flushed/changed as soon as possible to prevent component damage.

Driving In Snow, Mud And Sand

In heavy snow, when pulling a load, or for additional control at slower speeds, shift the transmission to a low gear and shift the 4WD system to the appropriate terrain mode, using 4WD LOW if necessary. Refer to "Four-Wheel Drive Operation" in "Starting And Operating" for further information. Do not shift to a lower gear than necessary to maintain headway. Over-revving the engine can spin the wheels and traction will be lost.

Avoid abrupt downshifts on icy or slippery roads because engine braking may cause skidding and loss of control.

Hill Climbing

NOTE: Before attempting to climb a hill, determine the conditions at the crest and/or on the other side.

Before climbing a steep hill, shift the transmission to a lower gear and shift the 4WD System to 4WD LOW. Use first gear and 4WD LOW for very steep hills.

NOTE: Brakes should be applied at increased slippage, but before coming to a stop to avoid digging into the loose surface and rendering the operator of the vehicle stuck/immobile.

If you stall or begin to lose headway while climbing a steep hill, allow your vehicle to come to a stop and immediately apply the brakes. Once stopped, shift to REVERSE. Back slowly down the hill allowing the compression braking of the engine to help regulate your speed. If the brakes are required to control vehicle speed, apply them lightly and avoid locking or skidding the tires.

WARNING!

If the engine stalls or you lose headway or cannot make it to the top of a steep hill or grade, never attempt to turn around. To do so may result in tipping and rolling the vehicle. Always back straight down a hill in REVERSE gear carefully. Never back down a hill in NEUTRAL using only the brake.

NOTE: Remember, never drive diagonally across a hill - drive straight up or down.

If the wheels start to slip as you approach the crest of a hill, ease off the accelerator and maintain headway by turning the front wheels slowly left and right. This may provide a fresh "bite" into the surface and may provide traction to complete the climb.

Traction Downhill

Shift the transmission into a low gear and the 4WD System to 4WD LOW range or Select Hill Descent Control if equipped (refer to "Safety Features" in the "Safety" section for further information). Let the vehicle go slowly down the hill with all four wheels turning against engine compression drag. This will permit you to control the vehicle speed and direction.

When descending mountains or hills, repeated braking can cause brake fade with loss of braking control. Avoid repeated heavy braking by downshifting the transmission whenever possible.

After Driving Off-Road

Off-road operation puts more stress on your vehicle than does most on-road driving. After going off-road, it is always a good idea to check for damage.

- Completely inspect the underbody of your vehicle. Check tires, body structure, steering, suspension, and exhaust system for damage.
- Inspect the radiator for mud and debris and clean as required.
- Check threaded fasteners for looseness, particularly on the chassis, drivetrain components, steering, and suspension. Retighten them, if required, and torque to the values specified in the Service Manual.
- Check for accumulations of plants or brush. These things could be a fire hazard. They might hide damage to fuel lines, brake hoses, axle pinion seals, and propeller shafts.

- After extended operation in mud, sand, water, or similar dirty conditions, have the radiator, fan, brake rotors, wheels, brake linings, and axle yokes inspected and cleaned as soon as possible.

WARNING!

Abrasive material in any part of the braking system may cause excessive wear or unpredictable braking performance. Full braking power may not be available to prevent a collision. If you have been operating your vehicle in dirty conditions, inspect and clean the braking components as soon as possible.

- Impacted material can cause wheel imbalance. Freeing the wheels of impacted material will likely rectify imbalance condition

IN CASE OF EMERGENCY

CONTENTS

- HAZARD WARNING FLASHERS 387
- ASSIST AND 9–1–1 MIRROR — IF EQUIPPED . . .387
- BULB REPLACEMENT 392
  - Replacement Bulbs 392
  - Replacing Exterior Bulbs 393
- FUSES 396
  - General Information 396
  - Underhood Fuses 397
  - Interior Fuses 407
- JACKING AND TIRE CHANGING 408
  - Jack Location/Spare Tire Stowage 408
  - Preparations For Jacking 410
  - Jacking Instructions 410
  - Road Tire Installation 416
- TIRE SERVICE KIT — IF EQUIPPED 417
  - Tire Service Kit Storage 417
  - Tire Service Kit Components And Operation . . .418
  - Tire Service Kit Usage Precautions 419
  - Sealing A Tire With Tire Service Kit 420
- JUMP STARTING PROCEDURES 425
  - Preparations For Jump Start 425
  - Jump Starting Procedure 427
- REFUELING IN EMERGENCY 428
  - Emergency Fuel Filler Door Release 428
- IF YOUR ENGINE OVERHEATS 429
- GEAR SELECTOR OVERRIDE 430
- FREEING A STUCK VEHICLE 430
- TOWING A DISABLED VEHICLE 432

- Front-Wheel Drive (FWD) Models 434
- 4x4 Models With 1–Speed Power Transfer Unit . .434
- 4x4 Models With 2–Speed Power Transfer Unit . .434
- Recovery Strap — If Equipped 435

■ ENHANCED ACCIDENT RESPONSE SYSTEM (EARS) 436

■ EVENT DATA RECORDER (EDR) 436

HAZARD WARNING FLASHERS

The Hazard Warning flasher switch is located in the lower center area of the instrument panel.

Push the switch to turn on the Hazard Warning flasher. When the switch is activated, all directional turn signals will flash on and off to warn oncoming traffic of an emergency. Push the switch a second time to turn off the Hazard Warning flashers.

This is an emergency warning system and it should not be used when the vehicle is in motion. Use it when your vehicle is disabled and it is creating a safety hazard for other motorists.

When you must leave the vehicle to seek assistance, the Hazard Warning flashers will continue to operate even though the ignition is placed in the OFF position.

NOTE: With extended use, the Hazard Warning flashers may wear down your battery.

ASSIST AND 9–1–1 MIRROR — IF EQUIPPED

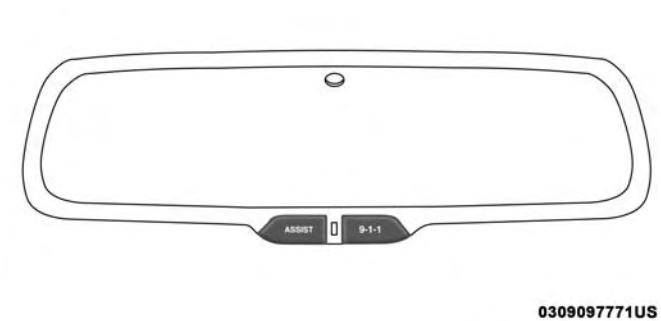

Assist And 9–1–1 Mirror

If equipped, the rearview mirror contains an ASSIST and a 9-1-1 button.

WARNING!

ALWAYS obey traffic laws and pay attention to the road. Some Uconnect Access services, including 9-1-1 and Assist, will NOT work without an operable 1X(voice/data) or 3G(data) network connection.

NOTE:

- Your vehicle may be transmitting data as authorized by the subscriber.
- The 9–1–1 and ASSIST buttons will only function if you are connected to an operable 1X(voice/data) or 3G(data) network. Other Uconnect services will only be operable if your Uconnect Access service is active and you are connected to an operable 1X(voice/data) or 3G(data) network.

ASSIST Call

The ASSIST Button is used to automatically connect you to any one of the following support centers:

- Roadside Assistance – If you get a flat tire, or need a tow, just push the ASSIST button and you'll be connected to someone who can help. Roadside Assistance will know what vehicle you're driving and its location. Additional fees may apply for roadside Assistance.
- Uconnect Access Customer Care – In-vehicle support for Uconnect Access.
- Vehicle Customer Care – Total support for all other vehicle issues.

9-1-1 Call

1. Push the 9-1-1 Call button on the Rearview Mirror.

NOTE: In case the 9-1-1 Call button is pushed in error, there will be a 10 second delay before the 9-1-1 Call system initiates a call to a 9-1-1 operator. To cancel the 9-1-1 Call connection, push the 9-1-1 Call button on the Rearview Mirror or press the cancellation button on the Device Screen. Termination of the 9-1-1 Call will turn off the green LED light on the Rearview Mirror.

2. The LED light located between the ASSIST and 9-1-1 buttons on the Rearview Mirror will turn green once a connection to a 9-1-1 operator has been made.
3. Once a connection between the vehicle and a 9-1-1 operator is made, the 9-1-1 Call system may transmit the following important vehicle information to a 9-1-1 operator:
   - Indication that the occupant placed a 9-1-1 Call.
   - The vehicle brand.
   - The last known GPS coordinates of the vehicle.
4. You should be able to speak with the 9-1-1 operator through the vehicle audio system to determine if additional help is needed.

WARNING!

ALWAYS obey traffic laws and pay attention to the road. Some Uconnect Access services, including 9-1-1 and Assist, will NOT work without an operable 1X(voice/data) or 3G(data) network connection.

NOTE:

- Your vehicle may be transmitting data as authorized by the subscriber.
- Once a connection is made between the vehicle's 9-1-1 Call system and the 9-1-1 operator, the 9-1-1 operator may be able to open a voice connection with the vehicle to determine if additional help is needed. Once the 9-1-1 operator opens a voice connection with the vehicle's 9-1-1 Call system, the operator should be able to speak with you or other vehicle occupants and hear sounds occurring in the vehicle. The vehicle's 9-1-1 Call system will attempt to remain connected with the 9-1-1 operator until the 9-1-1 operator terminates the connection.

5. The 9-1-1 operator may attempt to contact appropriate emergency responders and provide them with important vehicle information and GPS coordinates.

WARNING!

- **If anyone in the vehicle could be in danger (e.g., fire or smoke is visible, dangerous road conditions or location), do not wait for voice contact from a 9-1-1 operator. All occupants should exit the vehicle immediately and move to a safe location.**
- **Never place anything on or near the vehicle's operable 1X(voice/data) or 3G(data) network and GPS antennas. You could prevent operable 1X(voice/data) or 3G(data) network and GPS signal reception, which can prevent your vehicle from placing an emergency call. An operable 1X(voice/data) or 3G(data) network and GPS signal reception is required for the 9-1-1 Call system to function properly.**
- **The 9-1-1 Call system is embedded into the vehicle's electrical system. Do not add aftermarket electrical equipment to the vehicle's electrical system. This may prevent your vehicle from sending a signal to initiate an emergency call. To avoid interference that can cause the 9-1-1 Call system to fail, never add aftermarket equipment (e.g., two-way mobile radio, CB radio, data recorder, etc.) to your vehicle's electrical system or modify the antennas on your vehicle. IF**

(Continued)

WARNING! *(Continued)*

YOUR VEHICLE LOSES BATTERY POWER FOR ANY REASON (INCLUDING DURING OR AFTER AN ACCIDENT), THE UCONNECT FEATURES, APPS AND SERVICES, AMONG OTHERS, WILL NOT OPERATE.

- **Modifications to any part of the 9-1-1 Call system could cause the air bag system to fail when you need it. You could be injured if the air bag system is not there to help protect you.**

9-1-1 Call System Limitations

Vehicles sold in Canada and Mexico **DO NOT** have 9-1-1 Call system capabilities.

9-1-1 or other emergency line operators in Canada and Mexico may not answer or respond to 9-1-1 system calls.

If the 9-1-1 Call system detects a malfunction, any of the following may occur at the time the malfunction is detected, and at the beginning of each ignition cycle:

- The Rearview Mirror light located between the ASSIST and 9-1-1 buttons will continuously be illuminated red.
- The Device Screen will display the following message "Vehicle device requires service. Please contact your dealer."
- An In-Vehicle Audio message will state "Vehicle device requires service. Please contact your dealer."

WARNING!

- **Ignoring the Rearview Mirror light could mean you will not have 9-1-1 Call services. If the Rearview Mirror light is illuminated, have an authorized dealer service the 9-1-1 Call system immediately.**
- **The Occupant Restraint Control module turns on the air bag Warning Light on the instrument panel if a malfunction in any part of the system is detected. If the Air Bag Warning Light is illuminated, have an authorized dealer service the Occupant Restraint Control system immediately.**

Even if the 9-1-1 Call system is fully functional, factors beyond FCA US LLC's control may prevent or stop the 9-1-1 Call system operation. These include, but are not limited to, the following factors:

- Delayed accessories mode is active.
- The ignition is in the OFF position.

- The vehicle's electrical systems are not intact.
- The 9-1-1 Call system software and/or hardware are damaged during a crash.
- The vehicle battery loses power or becomes disconnected during a vehicle crash.
- 1X(voice/data) or 3G(data) network and/or Global Positioning Satellite signals are unavailable or obstructed.
- Equipment malfunction at the 9-1-1 operator facility.
- Operator error by the 9-1-1 operator.
- 1X(voice/data) or 3G(data) network congestion.
- Weather.
- Buildings, structures, geographic terrain, or tunnels.

WARNING!

ALWAYS obey traffic laws and pay attention to the road. Some Uconnect Access services, including 9-1-1 and Assist, will NOT work without an operable 1X(voice/data) or 3G(data) network connection.

NOTE:

- Your vehicle may be transmitting data as authorized by the subscriber.
- Never place anything on or near the vehicle's 1X(voice/data) or 3G(data) and GPS antennas. You could prevent 1X(voice/data) or 3G(data) and GPS signal reception, which can prevent your vehicle from placing an emergency call. An operable 1X(voice/data) or 3G(data) network connection and a GPS signal is required for the 9-1-1 Call system to function properly.

General Information

This device complies with Part 15 of the FCC Rules. Operation is subject to the following two conditions: (1) This device may not cause harmful interference, and (2) this device must accept any interference received, including interference that may cause undesired operation.

NOTE: Changes or modifications not expressly approved by the party responsible for compliance could void the user's authority to operate the equipment.

CAUTION!

To avoid damage to the mirror during cleaning, never spray any cleaning solution directly onto the mirror.

(Continued)

CAUTION! ***(Continued)***

Apply the solution onto a clean cloth and wipe the mirror clean.

BULB REPLACEMENT

Replacement Bulbs

Interior Bulbs

	Bulb Number
Cargo Lamp	TL212–2
Overhead Console Lamp	PLW214–2A
Reading Lamp	WL212–2

Exterior Bulbs

	Bulb Number
Low Beam/High Beam (Bi-Halogen) Headlamps	9005HL +
Low Beam/High Beam (Bi-Xenon) Headlamps	D3S (Serviced at an authorized dealer)
Front Park/Daytime Running Lamps	LED (Serviced at an authorized dealer)
Front Turn Signal Lamps	WY21W
Front Fog Lamps	PSX24W
Rear Tail/Stop Lamps	LED (Serviced at an authorized dealer)
Rear Turn Signal Lamps	WY21W

	Bulb Number
Center High Mounted Stop Lamp (CHMSL)	LED (Serviced at an authorized dealer)
Back-Up Lamps	W16W or 921
License Plate Lamp	W5W

Replacing Exterior Bulbs

Bi-Xenon High Intensity Discharge (HID) Headlamps — If Equipped

The headlamps contain a type of high voltage discharge light source. High voltage can remain in the circuit even with the headlamp switch off. Because of this, you should not attempt to service a HID headlamp light source yourself. If an HID headlamp light source fails, take your vehicle to an authorized dealer for service.

NOTE: On vehicles equipped with HID headlamps, when the headlamps are turned on, there is a blue hue to the lights. This diminishes and becomes more white after approximately 10 seconds, as the system charges.

WARNING!

A transient high voltage occurs at the bulb sockets of HID headlamps when the headlamp switch is turned

(Continued)

WARNING! *(Continued)*

ON. It may cause serious electrical shock or electrocution if not serviced properly. See your authorized dealer for service.

Bi-Halogen Headlamps

1. Remove the three hex head screws from the wheel liner.
2. Pull the exterior edge of the liner towards the tire to gain access to the headlamp bulb cap.
3. Firmly grasp the cap and rotate it counterclockwise to unlock it.
4. Firmly grasp the bulb and connector assembly and rotate counterclockwise to remove from the housing.
5. Disconnect the bulb from the electrical connector and then connect the replacement bulb.

CAUTION!

Do not touch the new bulb with your fingers. Oil contamination will severely shorten bulb life. If the bulb comes in contact with any oily surface, clean the bulb with rubbing alcohol.

6. Install the bulb and connector assembly into the headlamp housing and rotate clockwise to lock it in place.
7. Install the bulb cap in the headlamp housing and rotate clockwise to lock it in place.
8. Install the three hex head screws into the wheel liner.

Front Turn Signals And Front Side Marker Lamps

1. Open the hood.

NOTE: Removal of the air cleaner filter housing may be necessary prior to replacing bulbs in the upper lamp assembly on the passenger side of the vehicle.

2. Twist the appropriate bulb and socket assembly counterclockwise, and then remove the bulb and socket assembly from the lamp housing.
3. Pull the bulb out of the socket and insert the replacement bulb.
4. Install the bulb and socket assembly into the housing, and rotate the socket clockwise to lock it in place.
5. Re-install air cleaner filter housing if removed.

Front Fog Lamp

1. Remove the three hex head screws from the wheel liner.
2. Pull the exterior edge of the wheel liner towards the tire to gain access to the bulb.
3. Squeeze the two tabs on the side of the bulb socket and pull straight out from the fog lamp.
4. Disconnect the wire harness from the bulb.

CAUTION!

Do not touch the new bulb with your fingers. Oil contamination will severely shorten bulb life. If the bulb comes in contact with any oily surface, clean the bulb with rubbing alcohol.

5. Reconnect the wiring harness to the new bulb and reinstall by inserting the new bulb straight into the fog lamp housing until it locks in place.
6. Lock the lower door in the wheel liner.

Rear Turn Signal Lamp

1. Open the liftgate.
2. Remove the screws that fasten the tail lamp housing to the vehicle.
3. Grasp the tail lamp and pull firmly rearward to disengage the lamp from the vehicle.
4. Disconnect the electrical connector.
5. Twist the socket counterclockwise and remove from housing.
6. Pull the bulb to remove it from the socket.
7. Replace the bulb and install the socket.
8. Reconnect the electrical connector.
9. Reinstall the tail lamp housing and screws.
10. Close the liftgate.

Liftgate Mounted Back-up Lamp

1. Open the liftgate.
2. Use a fiber stick or flat blade screw driver to pry the lower trim from the liftgate.
3. Once the trim is loose, pull it back exposing the trim panel.
4. Using a fiber stick or flat blade screw driver, open the trim panel exposing the back of the liftgate lamp.
5. Disconnect the electrical connector.
6. Twist the socket counterclockwise and remove from lamp.
7. Pull the bulb to remove it from the socket.
8. Replace the bulb, reinstall the socket.
9. Connect the electrical connector.
10. Reinstall the trim panel and the lower trim.
11. Close the liftgate.

License Plate Lamp

1. Using a small screwdriver, press inward the locking tab on the side of the lamp assembly and pull down on the lamp assembly for removal.
2. Pull bulb from socket, replace, and reinstall the lamp assembly into place ensuring the locking tab is secure.

FUSES

WARNING!

- **When replacing a blown fuse, always use an appropriate replacement fuse with the same amp rating as the original fuse. Never replace a fuse with another fuse of higher amp rating. Never replace a blown fuse with metal wires or any other material. Failure to use proper fuses may result in serious personal injury, fire and/or property damage.**
- **Before replacing a fuse, make sure that the ignition is off and that all the other services are switched off and/or disengaged.**
- **If the replaced fuse blows again, contact an authorized dealer.**
- **If a general protection fuse for safety systems (air bag system, braking system), power unit systems (engine system, transmission system) or steering system blows, contact an authorized dealer.**

General Information

The fuses protect electrical systems against excessive current.

When a device does not work, you must check the electrical circuit inside the fuse for a break/melt.

Also, please be aware that when using power outlets for extended periods of time with the engine off may result in vehicle battery discharge.

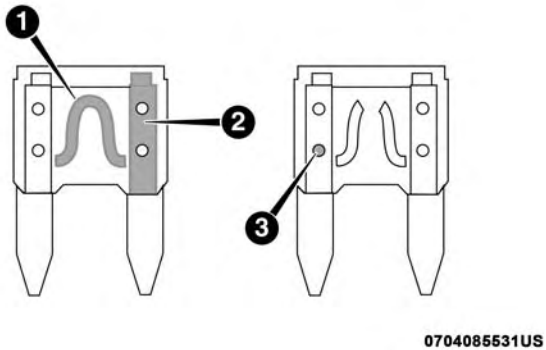

Blade Fuses

1 — Electrical Circuit
2 — Blade Fuse With Good Electrical Circuit
3 — Blade Fuse With Bad Electrical Circuit

Underhood Fuses

The Power Distribution Center is located in the engine compartment near the battery. This center contains cartridge fuses, mini-fuses and relays. A label that identifies each component is printed on the inside of the cover.

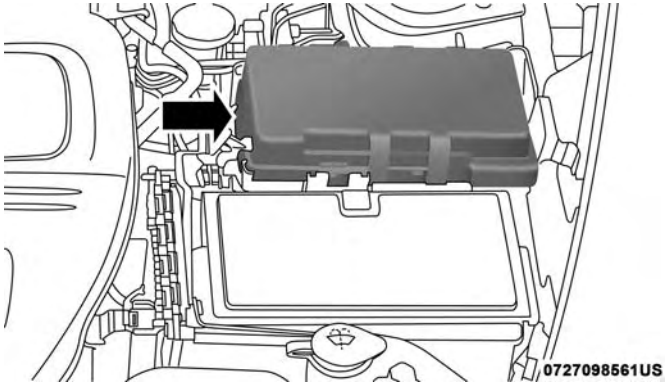

Power Distribution Center

Cavity	Blade Fuse	Cartridge Fuse	Description
F06	–	–	Not Used
F07	15 Amp Blue	–	Powertrain Control Module - PCM (Diesel Only)
F08	25 Amp Clear	–	Engine Control Module (ECM)/Fuel Injection
F09	–	–	Not Used
F10	20 Amp Yellow	–	Power Transfer Unit (PTU) – If Equipped
F11	–	–	Not Used

Cavity	Blade Fuse	Cartridge Fuse	Description
F12	20 Amp Yellow	–	Brake Vacuum Pump – If Equipped
F13	10 Amp Red	–	Engine Control Module (ECM)
F14	10 Amp Red	–	Drivetrain Control Module (DTCM)/Power Take-Off Unit (PTU)/Brake System Module (BSM) – If Equipped/Brake Pedal Switch/Back Up Switch (Diesel Only)
F15	–	–	Not Used
F16	20 Amp Yellow	–	Ign Coil (Gas)/Engine Sensor (Diesel)
F17	–	–	Not Used
F18	–	–	Not Used
F19	–	40 Amp Green	Starter Solenoid
F20	10 Amp Red	–	A/C Compressor Clutch
F21	–	–	Not Used
F22	5 Amp Tan	–	Radiator Fan
F23	70 Amp Tan	–	Body Controller Module (BCM) – Feed 2

Cavity	Blade Fuse	Cartridge Fuse	Description
F23	50 Amp Red	–	Voltage Stability Module (VSM) Feed #2 – If Equipped With Stop/Start Engine Option
F24	20 Amp Yellow	–	Rear Wiper – If Equipped With Stop/Start Engine Option
F25B	20 Amp Yellow	–	Front Washer – If Equipped With Stop/Start Engine Option
F26	–	30 Amp Pink	Fuel Heater – Diesel Only
F27	–	–	Not Used
F28	15 Amp Blue	–	Transmission Control Module (TCM)
F29	–	–	Not Used
F30	10 Amp Red	–	Engine Control Module (ECM)/(EPS)/(PCM)
F31	–	–	Not Used
F32	–	–	Not Used
F33	–	–	Not Used
F34	–	–	Not Used
F35	–	–	Not Used

Cavity	Blade Fuse	Cartridge Fuse	Description
F36	–	–	Not Used
F37	–	–	Not Used
F38	–	60 Amp Yellow	Glow Plugs (Diesel Only) – If Equipped
F39	–	40 Amp Green	HVAC Blower Motor
F40	–	20 Amp Blue	Trailer Tow Park Light – If Equipped
F40	–	30 Amp Pink	Headlamp Washer Pump – If Equipped
F41	–	60 Amp Yellow	Body Controller Module (BCM) – Feed 1
F41	–	50 Amp Red	Voltage Stability Module - Feed 1 – If Equipped With Stop/Start Engine Option
F42	–	30 Amp Pink	Trailer Tow Electric Brake Module – If Equipped
F43	20 Amp Yellow	–	Fuel Pump Motor
F44	–	30 Amp Pink	Trailer Tow / 7-Way Connector – If Equipped
F45	–	30 Amp Pink	Passenger Door Module (PDM) – If Equipped
F46	–	25 Amp Clear	Sunroof – If Equipped

Cavity	Blade Fuse	Cartridge Fuse	Description
F48	–	30 Amp Pink	Driver Door Module – If Equipped
F49	–	30 Amp Pink	Power Inverter (115V A/C) — If Equipped
F50	–	30 Amp Pink	Power Liftgate – If Equipped
F51	–	–	Not Used
F52	–	30 Amp Pink	Front Wipers – If Equipped With Stop/Start Engine Option
F53	–	30 Amp Pink	Brake System Module & Valves
F54	–	30 Amp Pink	Body Control Module (BCM) Feed 3
F55	10 Amp Red	–	Blind Spot Sensors/ Compass/Rearview Camera/Trunk Lamp With Flashlamp Charger – If Equipped
F56	15 Amp Blue	–	Ignition Node Module (IGNM)/KIN/RF Hub/ Electric Steering Column Lock (ESL)

Cavity	Blade Fuse	Cartridge Fuse	Description
F57	20 Amp Yellow	–	Trailer Tow Lights Left – If Equipped
F58	10 Amp Red	–	Occupant Classification Module/VSM/ESC
F59	–	30 Amp Pink	Drivetrain Control Module (DTCM) – If Equipped
F60	20 Amp Yellow	–	Power Outlet – Center Console
F61	20 Amp Yellow	–	Trailer Tow Lights Right – If Equipped
F62	20 Amp Yellow	–	Windshield De-Icer – If Equipped
F63	20 Amp Yellow	–	Front Heated/Vented Seats – If Equipped
F64	20 Amp Yellow	–	Heated Steering Wheel – If Equipped
F65	10 Amp Red	–	In Vehicle Temperature Sensor/Humidity Sensor/ Driver Assist System Module (DASM)/Park Assist (PAM) – If Equipped With Stop/Start option

Cavity	Blade Fuse	Cartridge Fuse	Description
F66	15 Amp Blue	–	HVAC (ECC)/Instrument Panel Cluster (IPC)
F67	10 Amp Red	–	In Vehicle Temperature Sensor/Humidity Sensor/ Driver Assist System Module (DASM)/Park Assist (PAM) – If Not Equipped With Stop/Start Option
F68	–	–	Not Used
F69	10 Amp Red	–	Power Transfer Unit Switch (TSBM)/Active Grill Shutter (AGS) – If Equipped With Gas Engine
69A	10 Amp Red	–	Power Transfer Unit Switch (TSBM) – If Equipped With Diesel Engine
F70	5 Amp Tan	–	Intelligent Battery Sensor – If Equipped With Stop/ Start Engine Option
F71	20 Amp Yellow	–	HID Headlamp Right – If Equipped With Stop/Start Engine Option

Cavity	Blade Fuse	Cartridge Fuse	Description
F72	10 Amp Red	–	Heated Mirrors – If Equipped
F73	–	20 Amp Blue	Trailer Tow Back Up – If Equipped
F74	–	30 Amp Pink	Rear Defroster
F75	20 Amp Yellow	–	Cigar Lighter – If Equipped
F76	20 Amp Yellow	–	Rear Differential Module (RDM) – If Equipped
F77	10 Amp Red	–	Fuel Door Release/Brake Pedal Switch
F78	10 Amp Red	–	Diagnostic Port/Digital TV (Japan Only)
F79	10 Amp Red	–	Integrated Center Stack (ICS)/HVAC/Aux Switch Bank Module (ASBM)/ Instrument Panel Cluster (IPC)
F80	20 Amp Yellow	–	Radio / CD – If Equipped
F81	–	–	Not Used
F82	–	–	Not Used
F83	–	20 Amp Blue	Engine Controller Module (Gas)

Cavity	Blade Fuse	Cartridge Fuse	Description
F84	–	30 Amp Pink	Electric Park Brake (EPB) – Left
F85	–	–	Not Used
F86	20 Amp Yellow	–	Horns – If Equipped With Stop/Start Engine Option
F87A	20 Amp Yellow	–	HID Headlamp Left – If Equipped With Stop/Start Engine Option
F88	15 Amp Blue	–	Collision Mitigation Module (CMM)/ Electrochromatic Mirror/ Smart Camera Module – If Equipped
F89	10 Amp Red	–	Headlamp Leveling – If Equipped
F90	–	–	Not Used
F91	20 Amp Yellow	–	Power Outlet Rear – If Equipped – Customer Selectable
F92	–	–	Not Used
F93	–	40 Amp Green	Brake System Module (BSM) – Pump Motor

Cavity	Blade Fuse	Cartridge Fuse	Description
F94	–	30 Amp Pink	Electric Park Brake (EPB) – Right
F95	10 Amp Red	–	Electrochromatic Mirror/ Rain Sensor/Sunroof – If Equipped/Passenger Window Switch/Power Outlet Console/Digital TV (Japan Only)
F96	10 Amp Red	–	Occupant Restraint Controller (ORC)/(Airbag)
F97	10 Amp Red	–	Occupant Restraint Controller (ORC)/(Airbag)
F98	25 Amp Clear	–	Audio Amplifier – If Equipped
F99	–	–	Not Used
F100	–	–	Not Used

Interior Fuses

The interior fuse panel is located on the Body Control Module (BCM) in the passenger compartment on the left side dash panel under the instrument panel.

Cavity	Blade Fuse	Description
F13	15 Amp Blue	Low Beam Left
F32	10 Amp Red	Interior Lighting
F36	10 Amp Red	Intrusion Module/Siren – If Equipped
F38	20 Amp Yellow	Deadbolt All Unlock
F43	20 Amp Yellow	Washer Pump Front
F48	25 Amp Clear	Fog Lamp Rear Left/Right – If Equipped
F49	7.5 Amp Brown	Lumbar Support
F50	7.5 Amp Brown	Wireless Charging Pad – If Equipped
F51	10 Amp Red	Driver Window Switch/Power Mirrors – If Equipped
F53	7.5 Amp Brown	UCI Port (USB & AUX)
F89	10 Amp Red	Door Locks – Driver Unlock
F91	7.5 Amp Brown	Left Front Fog Lamp (Low And High Line)
F92	7.5 Amp Brown	Right Front Fog Lamp (High Line)
F93	10 Amp Red	Low Beam Right

JACKING AND TIRE CHANGING

WARNING!

- **Do not attempt to change a tire on the side of the vehicle close to moving traffic. Pull far enough off the road to avoid the danger of being hit when operating the jack or changing the wheel.**
- **Being under a jacked-up vehicle is dangerous. The vehicle could slip off the jack and fall on you. You could be crushed. Never put any part of your body under a vehicle that is on a jack. If you need to get under a raised vehicle, take it to a service center where it can be raised on a lift.**
- **Never start or run the engine while the vehicle is on a jack.**
- **The jack is designed to be used as a tool for changing tires only. The jack should not be used to lift the vehicle for service purposes. The vehicle should be jacked on a firm level surface only. Avoid ice or slippery areas.**

Jack Location/Spare Tire Stowage

The jack, wheel chocks, and spare tire are stowed under the load floor behind the rear seat.

1. Open the liftgate.
2. Lift the access cover using the load floor handle.

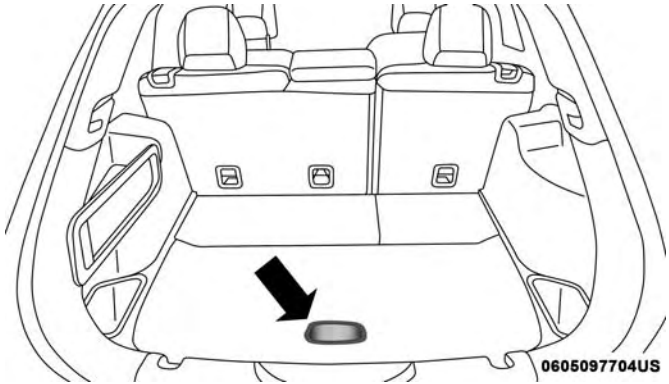

Load Floor Handle

3. Remove the hook from the stowed position on the back side of the load floor and place the hook over the top body flange and weather seal. This will hold the load floor up while obtaining the jack and spare tire.

4. Remove the fastener securing the jack and spare tire.

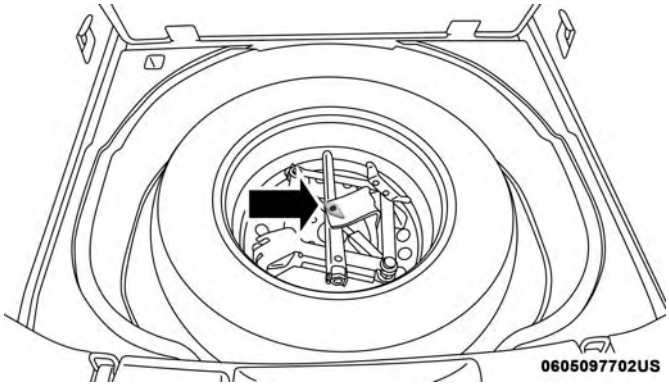

Jack And Spare Tire Fastener

5. Remove the chocks.
6. Remove the scissors jack and wheel bolt wrench from the spare wheel as an assembly. Turn the jack screw to the left to loosen the wheel bolt wrench, and remove the wrench from the jack assembly.

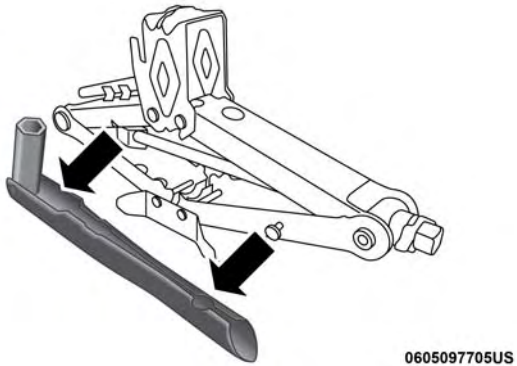

Jack And Tool Assembly

NOTE: The jack handle attaches to the side of the jack with two attachment points. When the jack is partially expanded, the tension between the two attachment points holds the jack handle in place.

7. Remove the spare tire.

WARNING!

A loose tire or jack thrown forward in a collision or hard stop could endanger the occupants of the vehicle. Always stow the jack parts and the spare tire in the places provided. Have the deflated (flat) tire repaired or replaced immediately.

Preparations For Jacking

1. Park the vehicle on a firm level surface as far from the edge of the roadway as possible. Avoid icy or slippery areas.

WARNING!

Do not attempt to change a tire on the side of the vehicle close to moving traffic, pull far enough off the road to avoid being hit when operating the jack or changing the wheel.

2. Turn on the Hazard Warning flasher.
3. Apply the parking brake.
4. Place the gear selector into PARK.
5. Turn the ignition off to the LOCK position.
6. Chock both the front and rear of the wheel diagonally opposite of the jacking position. For example, if changing the right front tire, chock the left rear wheel.

NOTE: Passengers should not remain in the vehicle when the vehicle is being jacked.

Jacking Instructions

WARNING!

Carefully follow these tire changing warnings to help prevent personal injury or damage to your vehicle:
- **Always park on a firm, level surface as far from the edge of the roadway as possible before raising the vehicle.**
- **Turn on the Hazard Warning flasher.**

(Continued)

WARNING! *(Continued)*

- **Chock the wheel diagonally opposite the wheel to be raised.**
- **Set the parking brake firmly and set the transmission in PARK.**
- **Never start or run the engine with the vehicle on a jack.**
- **Do not let anyone sit in the vehicle when it is on a jack.**
- **Do not get under the vehicle when it is on a jack. If you need to get under a raised vehicle, take it to a service center where it can be raised on a lift.**
- **Only use the jack in the positions indicated and for lifting this vehicle during a tire change.**
- **If working on or near a roadway, be extremely careful of motor traffic.**
- **To assure that spare tires, flat or inflated, are securely stowed, spares must be stowed with the valve stem facing the ground.**

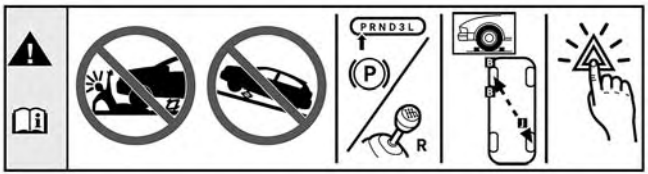

060600714

Jack Warning Label

CAUTION!

Do not attempt to raise the vehicle by jacking on locations other than those indicated in the Jacking Instructions for this vehicle.

1. Remove the spare tire, jack, and wheel bolt wrench.
2. If equipped with aluminum wheels where the center cap covers the wheel bolts, use the wheel bolt wrench to pry the center cap off carefully before raising the vehicle.

3. Before raising the vehicle, use the wheel bolt wrench to loosen, but not remove, the wheel bolts on the wheel with the flat tire. Turn the wheel bolts counterclockwise one turn while the wheel is still on the ground.

4. Place the jack underneath the lift area that is closest to the flat tire. Turn the jack screw clockwise to firmly engage the jack saddle with the lift area of the sill flange, centering the jack saddle inside the cutout in the sill cladding.

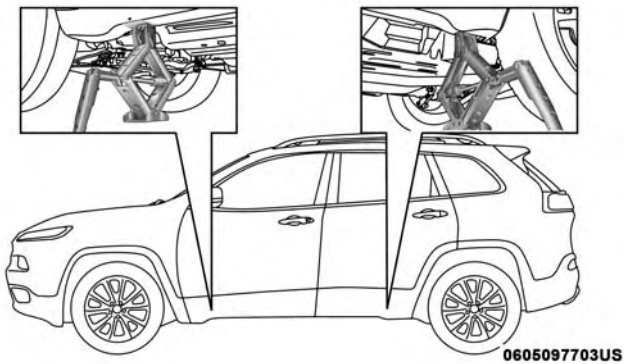

Jacking Locations

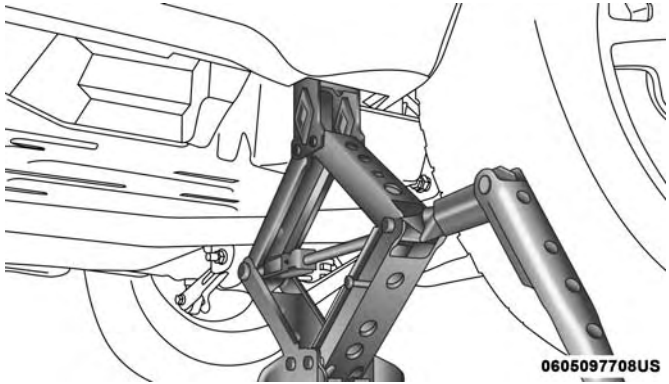

Rear Jacking Location

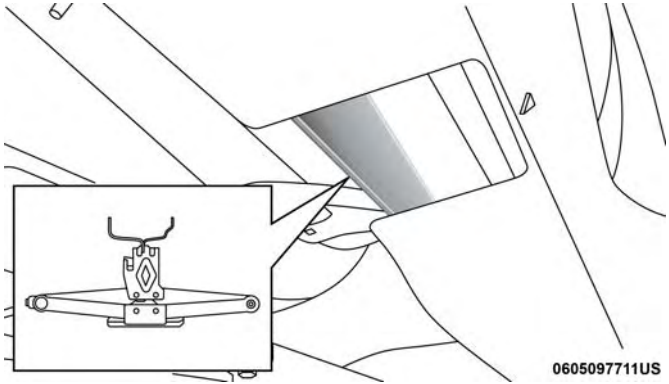

Rear Jacking Engagement Point

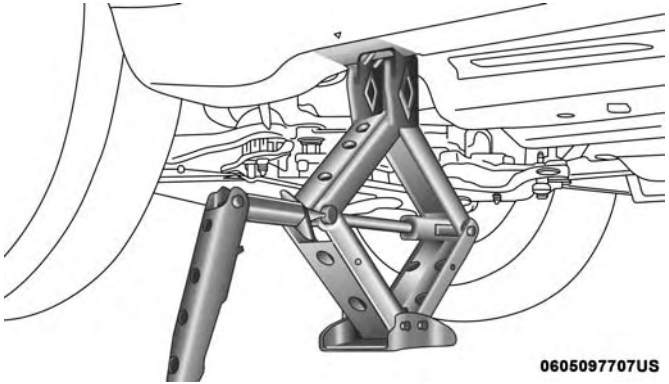

Front Jacking Location

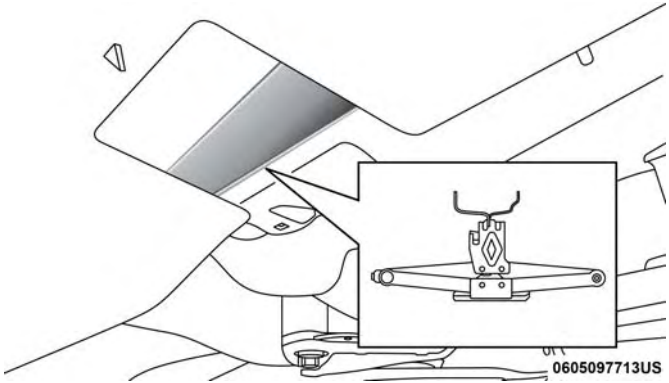

Front Jacking Engagement Point

5. Raise the vehicle just enough to remove the flat tire.

WARNING!

Raising the vehicle higher than necessary can make the vehicle less stable. It could slip off the jack and hurt someone near it. Raise the vehicle only enough to remove the tire.

6. Remove the wheel bolts and tire.
7. Remove the alignment pin from the jack assembly and thread the pin into the wheel hub to assist in mounting the spare tire.
8. Mount the spare tire.

CAUTION!

Be sure to mount the spare tire with the valve stem facing outward. The vehicle could be damaged if the spare tire is mounted incorrectly.

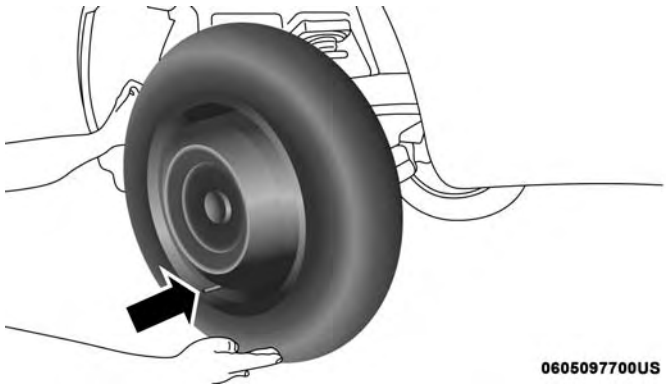

Mounting Spare Tire

NOTE:

- For vehicles so equipped, do not attempt to install a center cap or wheel cover on the compact spare.
- Refer to "Compact Spare Tire" and to "Limited-Use Spare" under "Tires—General Information" in "Servicing and Maintenance" for additional warnings, cautions, and information about the spare tire, its use, and operation.

9. Install the wheel bolts with the threaded end of the wheel bolt toward the wheel. Lightly tighten the wheel bolts.

WARNING!

To avoid the risk of forcing the vehicle off the jack, do not tighten the wheel nuts fully until the vehicle has been lowered. Failure to follow this warning may result in serious injury.

10. Lower the vehicle to the ground by turning the jack handle counterclockwise.
11. Finish tightening the wheel bolts. Push down on the wrench while at the end of the handle for increased leverage. Tighten the wheel bolts in a star pattern until each wheel bolt has been tightened twice. Refer to "Torque Specifications" in "Technical Specifications" for the proper lug bolt torque. If in doubt about the correct tightness, have them checked with a torque wrench by your authorized dealer or at a service station.

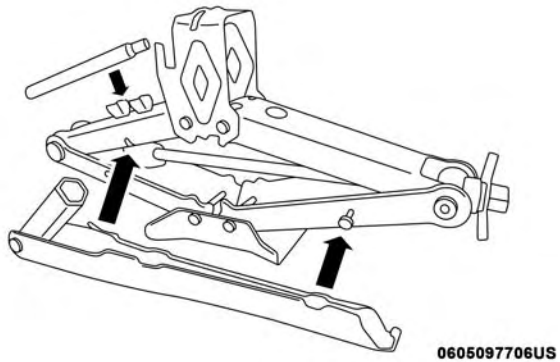

Assembled Jack

12. Securely stow the jack, tools, chocks, and flat tire.

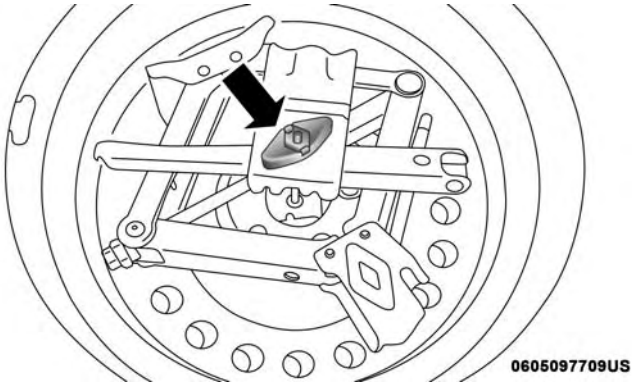

Stowed Tire, Jack And Chock

WARNING!

A loose tire or jack thrown forward in a collision or hard stop could endanger the occupants of the vehicle. Always stow the jack parts and the spare tire in the places provided. Have the deflated (flat) tire repaired or replaced immediately.

Road Tire Installation

1. Mount the road tire on the axle.
2. Install the remaining wheel bolts with the threaded end of the wheel bolt toward the wheel. Lightly tighten the wheel bolts.

WARNING!

To avoid the risk of forcing the vehicle off the jack, do not tighten the wheel nuts fully until the vehicle has been lowered. Failure to follow this warning may result in serious injury.

3. Lower the vehicle to the ground by turning the jack handle counterclockwise.
4. Finish tightening the wheel bolts. Push down on the wrench while at the end of the handle for increased leverage. Tighten the wheel bolts in a star pattern until each wheel bolt has been tightened twice. Refer to “Torque Specifications” in “Technical Specifications” for the proper lug bolt torque. If in doubt about the correct tightness, have them checked with a torque wrench by your authorized dealer or service station.

5. Lower the jack until it is free. Remove the wheel chocks. Reassemble the lug wrench to the jack assembly and stow it in the spare tire area. Secure the assembly using the means provided. Release the parking brake before driving the vehicle.

6. After 25 miles (40 km), check the wheel bolt torque with a torque wrench to ensure that all wheel bolts are properly seated against the wheel.

TIRE SERVICE KIT — IF EQUIPPED

Small punctures up to 1/4 inch (6 mm) in the tire tread can be sealed with Tire Service Kit. Foreign objects (e.g., screws or nails) should not be removed from the tire. Tire Service Kit can be used in outside temperatures down to approximately -4°F (-20°C).

This kit will provide a temporary tire seal, allowing you to drive your vehicle up to 100 miles (160 km) with a maximum speed of 55 mph (90 km/h).

Tire Service Kit Storage

The Tire Service Kit is stowed under the load floor behind the rear seat.

1. Open the liftgate.

2. Lift the access cover using the load floor handle.

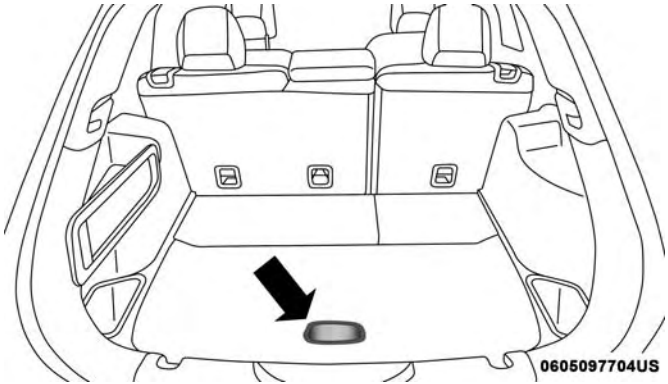

Load Floor Handle

Tire Service Kit Components And Operation

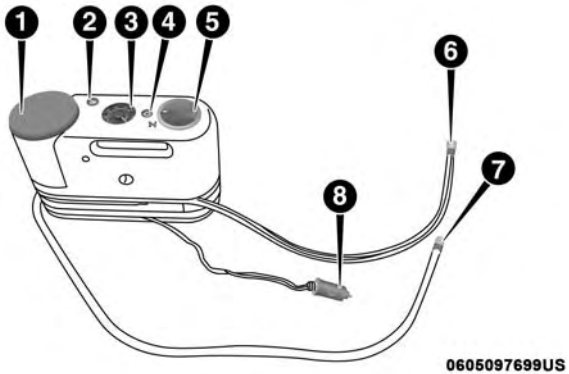

Tire Service Kit Components

1 — Sealant Bottle	5 — Mode Select Knob
2 — Deflation Button	6 — Sealant Hose (Clear)
3 — Pressure Gauge	7 — Air Pump Hose (Black)
4 — Power Button	8 — Power Plug (located on the bottom side of the Tire Service Kit)

Using The Mode Select Knob And Hoses

Your Tire Service Kit is equipped with the following symbols to indicate the air or sealant mode.

Selecting Air Mode

Push in the Mode Select Knob (5) and turn to this position for air pump operation only. Use the Black Air Pump Hose (7) when selecting this mode.

Selecting Sealant Mode

Push in the Mode Select Knob (5) and turn to this position to inject the Tire Service Kit Sealant and to inflate the tire. Use the Sealant Hose (clear hose) (6) when selecting this mode.

Using The Power Button

Push and release the Power Button (4) once to turn on the Tire Service Kit. Push and release the Power Button (4) again to turn Off the Tire Service Kit.

Using The Deflation Button

Push the Deflation Button (2) to reduce the air pressure in the tire if it becomes over-inflated.

Tire Service Kit Usage Precautions

- Replace the Tire Service Kit Sealant Bottle (1) and Sealant Hose (6) prior to the expiration date (printed at the lower right hand corner on the bottle label) to assure optimum operation of the system. Refer to “Sealing a Tire with Tire Service Kit” section (F) “Sealant Bottle and Hose Replacement”.

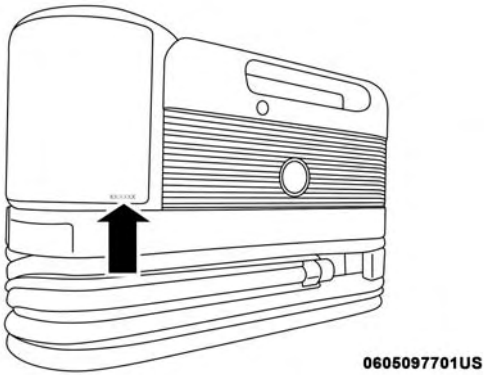

Tire Service Kit Expiration Date Location

- The Sealant Bottle (1) and Sealant Hose (6) are a one tire application use and need to be replaced after each use. Always replace these components immediately at your original equipment vehicle dealer.
- When the Tire Service Kit sealant is in a liquid form, clean water, and a damp cloth will remove the material from the vehicle or tire and wheel components. Once the sealant dries, it can easily be peeled off and properly discarded.
- For optimum performance, make sure the valve stem on the wheel is free of debris before connecting the Tire Service Kit.
- You can use the Tire Service Kit air pump to inflate bicycle tires. The kit also comes with two needles, located in the Accessory Storage Compartment (on the bottom of the air pump) for inflating sport balls, rafts, or similar inflatable items. However, use only the Air Pump Hose (7) and make sure the Mode Select Knob (5) is in the Air Mode when inflating such items to avoid injecting sealant into them. The Tire Service Kit Sealant is only intended to seal punctures less than 1/4 inch (6 mm) diameter in the tread of your vehicle.
- Do not lift or carry the Tire Service Kit by the hoses.

WARNING!

- **Do not attempt to seal a tire on the side of the vehicle closest to traffic. Pull far enough off the road to avoid the danger of being hit when using the Tire Service Kit.**
- **Do not use Tire Service Kit or drive the vehicle under the following circumstances:**
  - **If the puncture in the tire tread is approximately 1/4 inch (6 mm) or larger.**
  - **If the tire has any sidewall damage.**
  - **If the tire has any damage from driving with extremely low tire pressure.**
  - **If the tire has any damage from driving on a flat tire.**
  - **If the wheel has any damage.**
  - **If you are unsure of the condition of the tire or the wheel.**
- **Keep Tire Service Kit away from open flames or heat source.**
- **A loose Tire Service Kit thrown forward in a collision or hard stop could endanger the occupants of the vehicle. Always stow the Tire Service Kit in the place provided. Failure to follow these warnings can result**

(Continued)

WARNING! ***(Continued)***

in injuries that are serious or fatal to you, your passengers, and others around you.

- **Take care not to allow the contents of Tire Service Kit to come in contact with hair, eyes, or clothing. Tire Service Kit sealant is harmful if inhaled, swallowed, or absorbed through the skin. It causes skin, eye, and respiratory irritation. Flush immediately with plenty of water if there is any contact with eyes or skin. Change clothing as soon as possible, if there is any contact with clothing.**
- **Tire Service Kit Sealant solution contains latex. In case of an allergic reaction or rash, consult a physician immediately. Keep Tire Service Kit out of reach of children. If swallowed, rinse mouth immediately with plenty of water and drink plenty of water. Do not induce vomiting! Consult a physician immediately.**

Sealing A Tire With Tire Service Kit

(A) Whenever You Stop To Use Tire Service Kit:

1. Pull over to a safe location and turn on the vehicle's Hazard Warning flashers.

2. Verify that the valve stem (on the wheel with the deflated tire) is in a position that is near to the ground. This will allow the Tire Service Kit Hoses (6) and (7) to reach the valve stem and keep the Tire Service Kit flat on the ground. This will provide the best positioning of the kit when injecting the sealant into the deflated tire and running the air pump. Move the vehicle as necessary to place the valve stem in this position before proceeding.
3. Place the transmission in PARK (auto transmission) or in Gear (manual transmission) and place the ignition in the OFF position.
4. Apply the parking brake.

(B) Setting Up To Use Tire Service Kit:

1. Push in the Mode Select Knob (5) and turn to the Sealant Mode position.
2. Uncoil the Sealant Hose (6) and then remove the cap from the fitting at the end of the hose.
3. Place the Tire Service Kit flat on the ground next to the deflated tire.
4. Remove the cap from the valve stem and then screw the fitting at the end of the Sealant Hose (6) onto the valve stem.
5. Uncoil the Power Plug (8) and insert the plug into the vehicle's 12 Volt power outlet.

NOTE: Do not remove foreign objects (e.g., screws or nails) from the tire.

(C) Injecting Tire Service Kit Sealant Into The Deflated Tire:

- Always start the engine before turning ON the Tire Service Kit.

NOTE: Manual transmission vehicles must have the parking brake engaged and the gear selector in NEUTRAL.

- After pushing the Power Button (4), the sealant (white fluid) will flow from the Sealant Bottle (1) through the Sealant Hose (6) and into the tire.

NOTE: Sealant may leak out through the puncture in the tire.

If the sealant (white fluid) does not flow within 0 – 10 seconds through the Sealant Hose (6):

1. Push the Power Button (4) to turn Off the Tire Service Kit. Disconnect the Sealant Hose (6) from the valve stem. Make sure the valve stem is free of debris. Reconnect the Sealant Hose (6) to the valve stem. Check that the Mode

Select Knob (5) is in the Sealant Mode position and not Air Mode. Push the Power Button (4) to turn On the Tire Service Kit.

2. Connect the Power Plug (8) to a different 12 Volt power outlet in your vehicle or another vehicle, if available. Make sure the engine is running before turning ON the Tire Service Kit.

3. The Sealant Bottle (1) may be empty due to previous use. Call for assistance.

NOTE: If the Mode Select Knob (5) is on Air Mode and the pump is operating, air will dispense from the Air Pump Hose (7) only, not the Sealant Hose (6).

If the sealant (white fluid) does flow through the Sealant Hose (6):

1. Continue to operate the pump until sealant is no longer flowing through the hose (typically takes 30 - 70 seconds). As the sealant flows through the Sealant Hose (6), the Pressure Gauge (3) can read as high as 70 psi (4.8 Bar). The Pressure Gauge (3) will decrease quickly from approximately 70 psi (4.8 Bar) to the actual tire pressure when the Sealant Bottle (1) is empty.

2. The pump will start to inject air into the tire immediately after the Sealant Bottle (1) is empty. Continue to operate the pump and inflate the tire to the pressure indicated on the tire pressure label on the driver-side latch pillar (recommended pressure). Check the tire pressure by looking at the Pressure Gauge (3).

If the tire does not inflate to at least 26 psi (1.8 Bar) pressure within 15 minutes:

- The tire is too badly damaged. Do not attempt to drive the vehicle further. Call for assistance.

NOTE: If the tire becomes overinflated, push the Deflation Button to reduce the tire pressure to the recommended inflation pressure before continuing.

If the tire inflates to the recommended pressure or is at least 26 psi (1.8 Bar) pressure within 15 minutes:

1. Push the Power Button (4) to turn off the Tire Service Kit.

2. Remove the Speed Limit sticker from the top of the Sealant Bottle (1) and place the sticker on the instrument panel.

3. Immediately disconnect the Sealant Hose (6) from the valve stem, reinstall the cap on the fitting at the end of the hose, and place the Tire Service Kit in the vehicle storage location. Quickly proceed to (D) "Drive Vehicle."

CAUTION!

- **The metal end fitting from Power Plug (8) may get hot after use, so it should be handled carefully.**
- **Failure to reinstall the cap on the fitting at the end of the Sealant Hose (6) can result in sealant contacting your skin, clothing, and the vehicle's interior. It can also result in sealant contacting internal Tire Service Kit components which may cause permanent damage to the kit.**

(D) Drive Vehicle:

Immediately after injecting sealant and inflating the tire, drive the vehicle 5 miles (8 km) or 10 minutes to ensure distribution of the Tire Service Kit Sealant within the tire. Do not exceed 55 mph (90 km/h).

WARNING!

Tire Service Kit is not a permanent flat tire repair. Have the tire inspected and repaired or replaced after using Tire Service Kit. Do not exceed 55 mph (90 km/h) until the tire is repaired or replaced. Failure to follow this warning can result in injuries that are serious or fatal to you, your passengers, and others around you.

(E) After Driving:

Pull over to a safe location. Refer to "Whenever You Stop To Use Tire Service Kit" before continuing.

1. Push in the Mode Select Knob (5) and turn to the Air Mode position.
2. Uncoil the power plug and insert the plug into the vehicle's 12 Volt power outlet.
3. Uncoil the Air Pump Hose (7) (black in color) and screw the fitting at the end of hose (7) onto the valve stem.
4. Check the pressure in the tire by reading the Pressure Gauge (3).

If tire pressure is less than 19 psi (1.3 Bar):

The tire is too badly damaged. Do not attempt to drive the vehicle further. Call for assistance.

If the tire pressure is 19 psi (1.3 Bar) or higher:

1. Push the Power Button (4) to turn on Tire Service Kit and inflate the tire to the pressure indicated on the tire and loading information label on the driver-side door opening.

NOTE: If the tire becomes over-inflated, push the Deflation Button to reduce the tire pressure to the recommended inflation pressure before continuing.

2. Disconnect the Tire Service Kit from the valve stem, reinstall the cap on the valve stem and unplug from 12 Volt outlet.
3. Place the Tire Service Kit in its proper storage area in the vehicle.
4. Have the tire inspected and repaired or replaced at the earliest opportunity at an authorized dealer or tire service center.
5. Remove the Speed Limit sticker from the instrument panel after the tire has been repaired.
6. Replace the Sealant Bottle (1) and Sealant Hose (6) assembly at your authorized dealer as soon as possible. Refer to (F) “Sealant Bottle and Hose Replacement”.

NOTE: When having the tire serviced, advise the authorized dealer or service center that the tire has been sealed using the Tire Service Kit.

(F) Sealant Bottle And Hose Replacement:

1. Uncoil the Sealant Hose (6) (clear in color).
2. Locate the round Sealant Bottle release button in the recessed area under the sealant bottle.
3. Push the Sealant Bottle release button. The Sealant Bottle (1) will pop up. Remove the bottle and dispose of it accordingly.
4. Clean any remaining sealant from the Tire Service Kit housing.
5. Position the new Sealant Bottle (1) in the housing so that the Sealant Hose (6) aligns with the hose slot in the front of the housing. Push the bottle into the housing. An audible click will be heard indicating the bottle is locked into place.

6. Verify that the cap is installed on the fitting at the end of the Sealant Hose (6) and return the hose to its storage area (located on the bottom of the air pump).
7. Return the Tire Service Kit to its storage location in the vehicle.

JUMP STARTING PROCEDURES

If your vehicle has a discharged battery, it can be jump started using a set of jumper cables and a battery in another vehicle or by using a portable battery booster pack. Jump starting can be dangerous if done improperly, so please follow the procedures in this section carefully.

NOTE: When using a portable battery booster pack, follow the manufacturer's operating instructions and precautions.

WARNING!

Do not attempt jump starting if the battery is frozen. It could rupture or explode and cause personal injury.

CAUTION!

Do not use a portable battery booster pack or any other booster source with a system voltage greater than 12 Volts or damage to the battery, starter motor, alternator or electrical system may occur.

Preparations For Jump Start

The battery in your vehicle is located in the front of the engine compartment, behind the left headlight assembly.

NOTE: The positive battery post is covered with a protective cap. Lift up on the cap to gain access to the positive battery post.

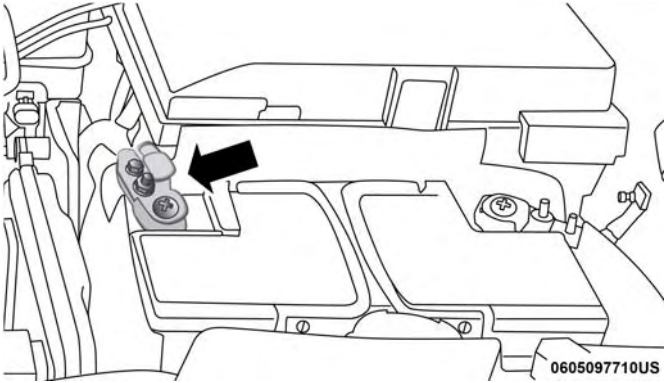

Positive Battery Post

WARNING!

- **Take care to avoid the radiator cooling fan whenever the hood is raised. It can start anytime the ignition switch is ON. You can be injured by moving fan blades.**
- **Remove any metal jewelry such as rings, watch bands and bracelets that could make an inadvertent electrical contact. You could be seriously injured.**

(Continued)

WARNING! ***(Continued)***

- **Batteries contain sulfuric acid that can burn your skin or eyes and generate hydrogen gas which is flammable and explosive. Keep open flames or sparks away from the battery.**

1. Apply the parking brake, shift the automatic transmission into PARK and turn the ignition to LOCK.
2. Turn off the heater, radio, and all unnecessary electrical accessories.
3. If using another vehicle to jump start the battery, park the vehicle within the jumper cables reach, apply the parking brake and make sure the ignition is OFF.

WARNING!

Do not allow vehicles to touch each other as this could establish a ground connection and personal injury could result.

Jump Starting Procedure

WARNING!

Failure to follow this jump starting procedure could result in personal injury or property damage due to battery explosion.

CAUTION!

Failure to follow these procedures could result in damage to the charging system of the booster vehicle or the discharged vehicle.

Connecting The Jumper Cables

1. Connect the positive **(+)** end of the jumper cable to the positive **(+)** post of the discharged vehicle.
2. Connect the opposite end of the positive **(+)** jumper cable to the positive **(+)** post of the booster battery.
3. Connect the negative **(-)** end of the jumper cable to the negative **(-)** post of the booster battery.
4. Connect the opposite end of the negative **(-)** jumper cable to a good engine ground (exposed metal part of the discharged vehicle's engine) away from the battery and the fuel injection system.

WARNING!

Do not connect the jumper cable to the negative (-) post of the discharged battery. The resulting electrical spark could cause the battery to explode and could result in personal injury. Only use the specific ground point, do not use any other exposed metal parts.

5. Start the engine in the vehicle that has the booster battery, let the engine idle for a few minutes, and then start the engine in the vehicle with the discharged battery.
6. Once the engine is started, remove the jumper cables in the reverse sequence:

Disconnecting The Jumper Cables

1. Disconnect the negative **(-)** end of the jumper cable from the engine ground of the vehicle with the discharged battery.
2. Disconnect the opposite end of the negative **(-)** jumper cable from the negative **(-)** post of the booster battery.

3. Disconnect the positive **(+)** end of the jumper cable from the positive **(+)** post of the booster battery.
4. Disconnect the opposite end of the positive **(+)** jumper cable from the positive **(+)** post of the vehicle with the discharged battery.

If frequent jump starting is required to start your vehicle, you should have the battery and charging system inspected at your authorized dealer.

CAUTION!

Accessories plugged into the vehicle power outlets draw power from the vehicle's battery, even when not in use (i.e., cellular devices, etc.). Eventually, if plugged in long enough without engine operation, the vehicle's battery will discharge sufficiently to degrade battery life and/or prevent the engine from starting.

REFUELING IN EMERGENCY

Emergency Fuel Filler Door Release

If you are unable to open the fuel filler door, use the fuel filler door emergency release.

1. Open the liftgate.
2. Remove access door located on right interior trim panel for release cable with the tip of your key.

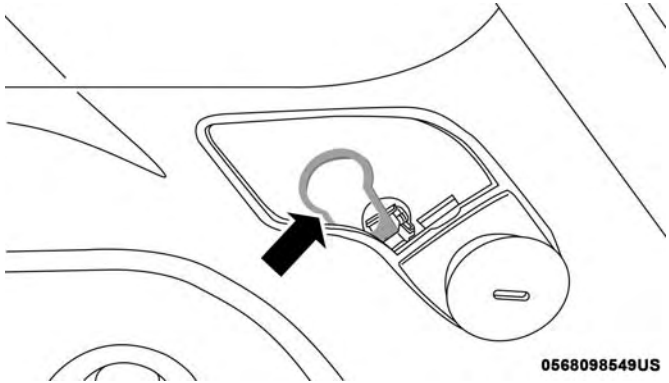

Fuel Door Release Location

3. Grab the release cable tether and pull up to release the fuel filler door.

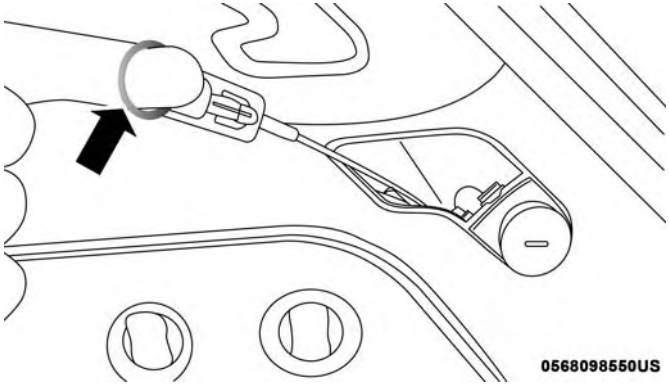

Fuel Door Released

IF YOUR ENGINE OVERHEATS

In any of the following situations, you can reduce the potential for overheating your engine by taking the appropriate action.

- On the highways — slow down.
- In city traffic — while stopped, place the transmission in NEUTRAL, but do not increase engine idle speed.

CAUTION!

Driving with a hot cooling system could damage your vehicle. If the temperature gauge reads "H," pull over and stop the vehicle. Idle the vehicle with the air conditioner turned off until the pointer drops back into the normal range. If the pointer remains on the "H" and you hear continuous chimes, turn the engine off immediately and call for service.

NOTE: There are steps that you can take to slow down an impending overheat condition:

- If your air conditioner (A/C) is on, turn it off. The A/C system adds heat to the engine cooling system and turning the A/C off can help remove this heat.
- You can also turn the temperature control to maximum heat, the mode control to floor and the blower control to high. This allows the heater core to act as a supplement to the radiator and aids in removing heat from the engine cooling system.

WARNING!

You or others can be badly burned by hot engine coolant (antifreeze) or steam from your radiator. If you see or hear steam coming from under the hood, do not open the hood until the radiator has had time to cool. Never try to open a cooling system pressure cap when the radiator or coolant bottle is hot.

GEAR SELECTOR OVERRIDE

If a malfunction occurs and the gear selector cannot be moved out of the PARK position, you can use the following procedure to temporarily move the gear selector:

1. Turn the engine OFF.
2. Apply the parking brake.
3. Using a screwdriver or similar tool, carefully separate the shifter bezel and boot assembly from the center console.
4. Press and maintain firm pressure on the brake pedal.
5. Insert a small screwdriver or similar tool down into the gear selector override access hole (at the right front corner of the gear selector assembly), and push and hold the override release lever down.
6. Move the gear selector to the NEUTRAL position.
7. The vehicle may then be started in NEUTRAL.
8. Reinstall the gear selector boot.

FREEING A STUCK VEHICLE

If your vehicle becomes stuck in mud, sand or snow, it can often be moved using a rocking motion. Turn the steering wheel right and left to clear the area around the front wheels. Push and hold the lock button on the gear selector. Then shift back and forth between DRIVE and REVERSE, while gently pressing the accelerator.

NOTE: Shifts between DRIVE and REVERSE can only be achieved at wheel speeds of 5 mph (8 km/h) or less. Whenever the transmission remains in NEUTRAL for more than two seconds, you must press the brake pedal to engage DRIVE or REVERSE.

Use the least amount of accelerator pedal pressure that will maintain the rocking motion without spinning the wheels or racing the engine.

WARNING!

Fast spinning tires can be dangerous. Forces generated by excessive wheel speeds may cause damage, or even failure, of the axle and tires. A tire could explode and injure someone. Do not spin your vehicle's wheels faster than 30 mph (48 km/h) or for longer than 30 seconds continuously without stopping when you are stuck and do not let anyone near a spinning wheel, no matter what the speed.

NOTE: Push the "ESC Off" switch (if necessary), to place the Electronic Stability Control (ESC) system in "Partial Off" mode, before rocking the vehicle. Refer to "Electronic Brake Control System" in "Safety" for further information. Once the vehicle has been freed, push the "ESC Off" switch again to restore "ESC On" mode.

CAUTION!

- **Racing the engine or spinning the wheels may lead to transmission overheating and failure. Allow the engine to idle with the transmission in NEUTRAL for at least one minute after every five rocking-motion cycles. This will minimize overheating and reduce the risk of clutch or transmission failure during prolonged efforts to free a stuck vehicle.**
- **When "rocking" a stuck vehicle by shifting between DRIVE/ SECOND gear and REVERSE, do not spin the wheels faster than 15 mph (24 km/h), or drive-train damage may result.**
- **Revving the engine or spinning the wheels too fast may lead to transmission overheating and failure. It can also damage the tires. Do not spin the wheels above 30 mph (48 km/h) while in gear (no transmission shifting occurring).**

TOWING A DISABLED VEHICLE

This section describes procedures for towing a disabled vehicle using a commercial towing service. If the transmission and drivetrain are operable, disabled 4x4 vehicles may also be towed as described under "Recreational Towing" in the "Starting And Operating" section.

			4X4 MODELS	
Towing Condition	**Wheels OFF The Ground**	**FWD MODELS**	**1–SPEED POWER TRANSFER UNIT**	**2–SPEED POWER TRANSFER UNIT**
Flat Tow	NONE	**NOT ALLOWED**	**NOT ALLOWED**	**See instructions under "Recreational Towing" in "Starting And Operating"** • Transmission in **PARK** • Power Transfer Unit in **NEUTRAL** • Tow in **forward** direction
Wheel Lift Or Dolly Tow	Rear	**NOT ALLOWED**	**NOT ALLOWED**	**NOT ALLOWED**
	Front	OK	**NOT ALLOWED**	**NOT ALLOWED**
Flatbed	**ALL**	**BEST METHOD**	OK	**BEST METHOD**

Proper towing or lifting equipment is required to prevent damage to your vehicle. Use only tow bars and other equipment designed for this purpose, following equipment manufacturer's instructions. Use of safety chains is mandatory. Attach a tow bar or other towing device to main structural members of the vehicle, not to bumpers or associated brackets. State and local laws regarding vehicles under tow must be observed.

NOTE:

- You must ensure that the Auto Park Brake feature is disabled before towing this vehicle, to avoid inadvertent Electric Park Brake engagement. The Auto Park Brake feature is enabled or disabled via the customer programmable features in the Uconnect Settings.
- Vehicles with a discharged battery or total electrical failure when the Electric Park Brake (EPB) is engaged, will need a wheel dolly or jack to raise the rear wheels off the ground when moving the vehicle onto a flatbed.

If you must use the accessories (wipers, defrosters, etc.) while being towed, the ignition must be in the ON/RUN mode, not the ACC mode. Note that the Safehold feature will engage the Electric Park Brake whenever the driver's door is opened (if the ignition is ON, transmission is not in PARK, and brake pedal is released). If you are towing this vehicle with the ignition in the ON/RUN mode, you must manually disable the Electric Park Brake each time the driver's door is opened, by pressing the brake pedal and then releasing the EPB.

If the key fob is unavailable, or the vehicle's battery is discharged, refer to "Gear Selector Override" in this section for instructions on shifting the transmission out of PARK so that the vehicle can be moved.

CAUTION!

- **Do not use sling type equipment when towing. Vehicle damage may occur.**
- **When securing the vehicle to a flat bed truck, do not attach to front or rear suspension components. Damage to your vehicle may result from improper towing.**
- **Ensure that the Electric Park Brake is released, and remains released, while being towed.**

Front-Wheel Drive (FWD) Models

The manufacturer recommends towing your vehicle with all four wheels **OFF** of the ground using a flatbed.

If flatbed equipment is not available, this vehicle must be towed with the front wheels **OFF** of the ground (using a towing dolly, or wheel lift equipment with the front wheels raised).

Ensure that the Electric Park Brake is released, and remains released, while being towed. The Electric Park Brake does not need to be released, if all four wheels are off the ground.

CAUTION!

Towing this vehicle in violation of the above requirements can cause severe transmission damage. Damage from improper towing is not covered under the New Vehicle Limited Warranty.

4x4 Models With 1–Speed Power Transfer Unit

The manufacturer requires towing with all four wheels **OFF** the ground.

Acceptable methods are to tow the vehicle on a flatbed, or with one end of vehicle raised and the opposite end on a towing dolly.

WARNING!

- **DO NOT tow this vehicle with ANY of its wheels on the ground. Damage to the drivetrain will result.**
- **Front or rear wheel lifts must not be used (if the remaining wheels are on the ground). Internal damage to the transmission or power transfer unit will occur if a front or rear wheel lift is used when towing.**
- **Towing this vehicle in violation of the above requirements can cause severe transmission and/or power transfer unit damage. Damage from improper towing is not covered under the New Vehicle Limited Warranty.**

4x4 Models With 2–Speed Power Transfer Unit

The manufacturer recommends towing with all four wheels **OFF** the ground.

Acceptable methods are to tow the vehicle on a flatbed or with one end of the vehicle raised and the opposite end on a towing dolly.

If flatbed equipment is not available and the Power Transfer Unit is operable, vehicles **with a 2–speed Power Transfer Unit** may be towed (in the forward direction, with **ALL** wheels on the ground), under the following conditions:

- The Power Transfer Unit must be in NEUTRAL (N).
- The transmission must be in **PARK**.
- Ensure that the Electric Park Brake is released, and remains released, while being towed.

Refer to "Recreational Towing" in "Starting And Operating" for detailed instructions.

CAUTION!

- **Front or rear wheel lifts must not be used (if the remaining wheels are on the ground). Internal damage to the transmission or power transfer unit will occur if a front or rear wheel lift is used when towing.**
- **Towing this vehicle in violation of the above requirements can cause severe transmission and/or power transfer unit damage. Damage from improper towing is not covered under the New Vehicle Limited Warranty.**

Recovery Strap — If Equipped

Your vehicle may be included with a recovery strap. Recovery straps do not act like traditional tow straps, chains, or winch cables.

WARNING!

Recovery straps should only be used in emergencies to rescue stranded vehicles. Only use Recovery straps on vehicles that fit within the recommended GVW of your recovery strap. Only attach recovery straps to OE recommended anchor points or emergency towing anchor points. Never attach to tow ball or vehicle tie down point, these are not designed for this purpose. Never attach to vehicle steering, drive train, or any other suspension components. NEVER pull a strap over sharp edges or abrasive surfaces that can damage the recovery strap. NEVER use a damaged strap, it has reduced strength. DO NOT attempt to repair straps. ONLY persons involved in the recovery should be in either vehicle. No passengers. Anyone inside the vehicles can be struck by strap recoil, causing serious injury. MOVE bystanders at least 40 ft (12.2 m) from the recovery area when using the recovery strap.

Using Recovery Strap

1. Review all warnings and instructions first.
2. Position the recovery vehicle.
3. Connect the recovery strap.
4. Add a recovery damper or blanket.
5. Clear the danger zone.
6. Safely and slowly start pulling.
7. Disconnect the recovery strap after both vehicle are secure and parked.

ENHANCED ACCIDENT RESPONSE SYSTEM (EARS)

This vehicle is equipped with an Enhanced Accident Response System.

Please refer to “Occupant Restraint Systems” in “Safety” for further information on the Enhanced Accident Response System (EARS) function.

EVENT DATA RECORDER (EDR)

This vehicle is equipped with an event data recorder (EDR). The main purpose of an EDR is to record, in certain crash or near crash-like situations, such as an air bag deployment or hitting a road obstacle, data that will assist in understanding how a vehicle’s systems performed.

Please refer to “Occupant Restraint Systems” in “Safety” for further information on the Event Data Recorder (EDR).

SERVICING AND MAINTENANCE

CONTENTS

■ SCHEDULED SERVICING 439
- □ Maintenance Plan. 440
- □ Heavy Duty Use Of The Vehicle 442

■ ENGINE COMPARTMENT 443
- □ 2.4L Engine 443
- □ 3.2L Engine 444
- □ Checking Oil Level 445
- □ Adding Washer Fluid 445
- □ Maintenance-Free Battery 446

■ DEALER SERVICE 447
- □ Engine Oil 447
- □ Engine Oil Filter 449
- □ Engine Air Cleaner Filter 449
- □ Accessory Drive Belt Inspection 452
- □ Air Conditioner Maintenance 453
- □ Body Lubrication 457
- □ Windshield Wiper Blades 457
- □ Exhaust System 462
- □ Cooling System 464
- □ Brake System 468
- □ Automatic Transmission 470

■ RAISING THE VEHICLE 471

■ TIRES 471
- □ Tire Safety Information 471
- □ Tires — General Information 481
- □ Tire Types 487
- □ Spare Tires — If Equipped 488
- □ Wheel And Wheel Trim Care 490

- Tire Chains (Traction Devices) 491
- Tire Rotation Recommendations 493

■ DEPARTMENT OF TRANSPORTATION UNIFORM TIRE QUALITY GRADES 495

- Treadwear 495
- Traction Grades 495
- Temperature Grades 495

■ STORING THE VEHICLE 496

■ BODYWORK 497

- Protection From Atmospheric Agents 497
- Body And Underbody Maintenance 498
- Preserving The Bodywork 498

■ INTERIORS 499

- Seats And Fabric Parts 499
- Plastic And Coated Parts. 500
- Leather Parts 500
- Glass Surfaces 501

SCHEDULED SERVICING

Your vehicle is equipped with an automatic oil change indicator system. The oil change indicator system will remind you that it is time to take your vehicle in for scheduled maintenance.

Based on engine operation conditions, the oil change indicator message will illuminate. This means that service is required for your vehicle. Operating conditions such as frequent short-trips, trailer tow, extremely hot or cold ambient temperatures will influence when the "Oil Change Required" message is displayed. Severe Operating Conditions can cause the change oil message to illuminate as early as 3,500 miles (5,600 km) since last reset. Have your vehicle serviced as soon as possible, within the next 500 miles (805 km).

Your authorized dealer will reset the oil change indicator message after completing the scheduled oil change. If a scheduled oil change is performed by someone other than your authorized dealer, the message can be reset by referring to the steps described under "Instrument Cluster Display" in "Understanding Your Instrument Panel" for further information.

NOTE: Under no circumstances should oil change intervals exceed 10,000 miles (16,000 km), twelve months or 350 hours of engine run time, whichever comes first. The 350 hours of engine run or idle time is generally only a concern for fleet customers.

Severe Duty All Models

Change Engine Oil at 4,000 miles (6,500 km) if the vehicle is operated in a dusty and off road environment or is operated predominately at idle or only very low engine RPM's. This type of vehicle use is considered Severe Duty.

Once A Month Or Before A Long Trip:

- Check engine oil level.
- Check windshield washer fluid level.
- Check tire pressure and look for unusual wear or damage. Rotate tires at the first sign of irregular wear, even if it occurs before the oil indicator system turns on.
- Check the fluid levels of the coolant reservoir and brake master cylinder, fill as needed.
- Check function of all interior and exterior lights.

Maintenance Plan

Required Maintenance Intervals.

Refer to the "Maintenance Plan" in this section for the required maintenance intervals.

At Every Oil Change Interval As Indicated By Oil Change Indicator System:
• Change oil and filter
• Rotate the tires **Rotate at the first sign of irregular wear, even if it occurs before the oil indicator system turns on**

At Every Oil Change Interval As Indicated By Oil Change Indicator System:
• Inspect battery and clean and tighten terminals as required
• Inspect brake pads, shoes, rotors, drums, hoses and park brake
• Inspect engine cooling system protection and hoses
• Inspect exhaust system
• Inspect engine air cleaner if using in dusty or off-road conditions

Mileage or time passed (whichever comes first)	20,000	30,000	40,000	50,000	60,000	70,000	80,000	90,000	100,000	110,000	120,000	130,000	140,000	150,000
Or Years:	2	3	4	5	6	7	8	9	10	11	12	13	14	15
Or Kilometers:	32,000	48,000	64,000	80,000	96,000	112,000	128,000	144,000	160,000	176,000	192,000	208,000	224,000	240,000
Additional Inspections														
Inspect the CV joints.	X		X		X		X		X		X		X	
Inspect front suspension, boot seals. tie rod ends, and replace if necessary.	X		X		X		X		X		X		X	
Inspect the brake linings, parking brake function.	X		X		X		X		X		X		X	

Mileage or time passed (whichever comes first)	20,000	30,000	40,000	50,000	60,000	70,000	80,000	90,000	100,000	110,000	120,000	130,000	140,000	150,000
Or Years:	**2**	**3**	**4**	**5**	**6**	**7**	**8**	**9**	**10**	**11**	**12**	**13**	**14**	**15**
Or Kilometers:	**32,000**	**48,000**	**64,000**	**80,000**	**96,000**	**112,000**	**128,000**	**144,000**	**160,000**	**176,000**	**192,000**	**208,000**	**224,000**	**240,000**
Inspect front accessory drive belt, tensioner, idler pulley, and replace if necessary.														X
Additional Maintenance														
Replace engine air cleaner filter.		X			X			X			X			X
Replace air conditioning/cabin air filter.	X		X		X		X		X		X		X	
Replace spark plugs.**									X					
Flush and replace the engine coolant at 10 years or 150,000 miles (240,000 km) whichever comes first.									X					X
Inspect and replace PCV valve if necessary.									X					

** The spark plug change interval is mileage based only, yearly intervals do not apply.

WARNING!

- **You can be badly injured working on or around a motor vehicle. Do only service work for which you have the knowledge and the right equipment. If you have any doubt about your ability to perform a service job, take your vehicle to a competent mechanic.**
- **Failure to properly inspect and maintain your vehicle could result in a component malfunction and effect vehicle handling and performance. This could cause an accident.**

Heavy Duty Use Of The Vehicle

Change Engine Oil at 4,000 miles (6,500 km) if the vehicle is operated in a dusty and off road environment or is operated predominately at idle or only very low engine RPM's. This type of vehicle use is considered Severe Duty.

ENGINE COMPARTMENT
2.4L Engine

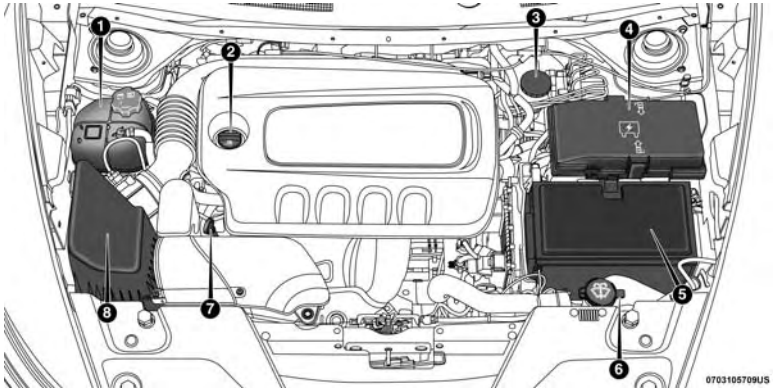

1 — Engine Coolant Reservoir
2 — Oil Fill Cap
3 — Brake Fluid Reservoir
4 — Power Distribution Center (Fuses)
5 — Battery
6 — Washer Fluid Reservoir
7 — Engine Oil Dipstick
8 — Air Cleaner Filter

3.2L Engine

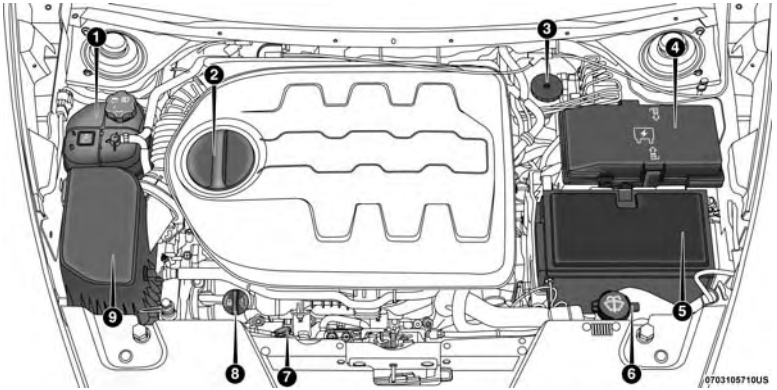

1 — Engine Coolant Reservoir
2 — Oil Filter Access Cover
3 — Brake Fluid Reservoir
4 — Power Distribution Center (Fuses)
5 — Battery
6 — Washer Fluid Reservoir
7 — Engine Oil Dipstick
8 — Engine Oil Fill
9 — Air Cleaner Filter

Checking Oil Level

To assure proper engine lubrication, the engine oil must be maintained at the correct level. Check the oil level at regular intervals, such as every month. The best time to check the engine oil level is about five minutes after a fully warmed up engine is shut off.

Checking the oil while the vehicle is on level ground will improve the accuracy of the oil level readings.

There are three possible dipstick types,

- Crosshatched zone.
- Crosshatched zone marked SAFE.
- Crosshatched zone marked with MIN at the low end of the range and MAX at the high end of the range.

NOTE: Always maintain the oil level within the crosshatch markings on the dipstick.

Adding 1 quart (1.0 liters) of oil when the reading is at the low end of the dipstick range will raise the oil level to the high end of the range marking.

CAUTION!

Overfilling or underfilling the crankcase will cause aeration or loss of oil pressure. This could damage your engine.

Adding Washer Fluid

The windshield and rear window washers share the same fluid reservoir. The fluid reservoir is located in the front of the engine compartment. Be sure to check the fluid level in the reservoir at regular intervals. Fill the reservoir with windshield washer solvent (not radiator antifreeze) and operate the system for a few seconds to flush out the residual water.

When refilling the washer fluid reservoir, take some washer fluid and apply it to a cloth or towel and wipe clean the wiper blades, this will help blade performance.

To prevent freeze-up of your windshield washer system in cold weather, select a solution or mixture that meets or exceeds the temperature range of your climate. This rating information can be found on most washer fluid containers.

WARNING!

Commercially available windshield washer solvents are flammable. They could ignite and burn you. Care must be exercised when filling or working around the washer solution.

Maintenance-Free Battery

Your vehicle is equipped with a maintenance-free battery. You will never have to add water, nor is periodic maintenance required.

WARNING!

- **Battery fluid is a corrosive acid solution and can burn or even blind you. Do not allow battery fluid to contact your eyes, skin, or clothing. Do not lean over a battery when attaching clamps. If acid splashes in eyes or on skin, flush the area immediately with large amounts of water. Refer to "Jump-Starting Procedure" in "In Case Of Emergency" for further information.**
- **Battery gas is flammable and explosive. Keep flame or sparks away from the battery. Do not use a booster**

(Continued)

WARNING! *(Continued)*

battery or any other booster source with an output greater than 12 Volts. Do not allow cable clamps to touch each other.
- **Battery posts, terminals, and related accessories contain lead and lead compounds. Wash hands after handling.**

CAUTION!

- **It is essential when replacing the cables on the battery that the positive cable is attached to the positive post and the negative cable is attached to the negative post. Battery posts are marked positive (+) and negative (-) and are identified on the battery case. Cable clamps should be tight on the terminal posts and free of corrosion.**
- **If a "fast charger" is used while the battery is in the vehicle, disconnect both vehicle battery cables before connecting the charger to the battery. Do not use a "fast charger" to provide starting voltage.**

DEALER SERVICE

Your authorized dealer has the qualified service personnel, special tools, and equipment to perform all service operations in an expert manner. Service Manuals are available which include detailed service information for your vehicle. Refer to these Service Manuals before attempting any procedure yourself.

NOTE: Intentional tampering with emissions control systems may void your warranty and could result in civil penalties being assessed against you.

WARNING!

You can be badly injured working on or around a motor vehicle. Only do service work for which you have the knowledge and the proper equipment. If you have any doubt about your ability to perform a service job, take your vehicle to a competent mechanic.

Engine Oil

Change Engine Oil — Gasoline Engine

Refer to "Scheduled Servicing" in this section for the proper maintenance intervals.

NOTE: Under no circumstances should oil change intervals exceed 10,000 miles (16,000 km), 12 months or 350 hours of engine run time, whichever comes first. The 350 hours of engine run or idle time is generally only a concern for fleet customers.

Gasoline Engine Oil Selection

For best performance and maximum protection under all types of operating conditions, the manufacturer only recommends engine oils that are API Certified and meet the requirements of FCA Material Standard MS-6395.

American Petroleum Institute (API) Engine Oil Identification Symbol

This symbol means that the oil has been certified by the American Petroleum Institute (API). The manufacturer only recommends API Certified engine oils.

This symbol certifies 0W-20, 5W-20, 0W-30, 5W-30 and 10W-30 engine oils.

CAUTION!

Do not use chemical flushes in your engine oil as the chemicals can damage your engine. Such damage is not covered by the New Vehicle Limited Warranty.

Engine Oil Viscosity (SAE Grade) — 2.4L Engine

Mopar SAE 0W-20 engine oil approved to FCA Material Standard MS-6395 such as Pennzoil, Shell Helix or equivalent is recommended for all operating temperatures. This engine oil improves low temperature starting and vehicle fuel economy.

The engine oil filler cap also shows the recommended engine oil viscosity for your engine. For information on engine oil filler cap location, refer to "Engine Compartment" in this section.

Lubricants which do not have both the engine oil certification mark and the correct SAE viscosity grade number should not be used.

Engine Oil Viscosity (SAE Grade) — 3.2L Engine

Mopar SAE 5W-20 engine oil or equivalent Pennzoil or Shell Helix is recommended for all operating temperatures. This engine oil improves low temperature starting and vehicle fuel economy. The engine oil filler cap also shows the recommended engine oil viscosity for your engine. For information on engine oil filler cap location, refer to "Engine Compartment" in this section.

Lubricants which do not have both the engine oil certification mark and the correct SAE viscosity grade number should not be used.

Synthetic Engine Oils

You may use synthetic engine oils provided the recommended oil quality requirements are met, and the recommended maintenance intervals for oil and filter changes are followed.

Synthetic engine oils which do not have both the engine oil certification mark and the correct SAE viscosity grade number should not be used.

Materials Added To Engine Oil

The manufacturer strongly recommends against the addition of any additives (other than leak detection dyes) to the engine oil. Engine oil is an engineered product and its performance may be impaired by supplemental additives.

Disposing Of Used Engine Oil And Oil Filters

Care should be taken in disposing of used engine oil and oil filters from your vehicle. Used oil and oil filters, indiscriminately discarded, can present a problem to the environment. Contact your authorized dealer, service station or governmental agency for advice on how and where used oil and oil filters can be safely discarded in your area.

Engine Oil Filter

The engine oil filter should be replaced with a new filter at every engine oil change.

Engine Oil Filter Selection

This manufacturer's engines have a full-flow type disposable oil filter. Use a filter of this type for replacement. The quality of replacement filters varies considerably. Only high quality filters should be used to assure most efficient service. Mopar engine oil filters are high quality oil filters and are recommended.

Engine Air Cleaner Filter

Refer to the "Maintenance Plan" in this section for the proper maintenance intervals.

NOTE: Be sure to follow the "Severe Duty Conditions" maintenance interval if applicable.

WARNING!

The air induction system (air cleaner, hoses, etc.) can provide a measure of protection in the case of engine backfire. Do not remove the air induction system (air cleaner, hoses, etc.) unless such removal is necessary for repair or maintenance. Make sure that no one is near the engine compartment before starting the vehicle with the air induction system (air cleaner, hoses, etc.) removed. Failure to do so can result in serious personal injury.

Engine Air Cleaner Filter Selection

The quality of replacement engine air cleaner filters varies considerably. Only high quality filters should be used to assure most efficient service. Mopar engine air cleaner filters are a high quality filter and are recommended.

Engine Air Cleaner Filter Inspection and Replacement

Inspect engine air cleaner filter for dirt and or debris, if you find evidence of either dirt or debris you should change your air cleaner filter.

Engine Air Cleaner Filter Removal

1. Remove the screws from the air cleaner cover.

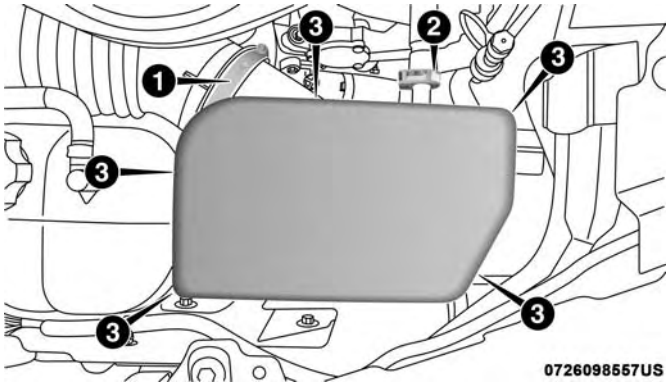

Air Cleaner Filter Cover

1 — Clean Air Hose Clamp
2 — Air Hose (If Equipped)
3 — Screws

2. Push in on the quick connect clip with your thumb and remove by pulling hose (if equipped) away from air cleaner filter cover.

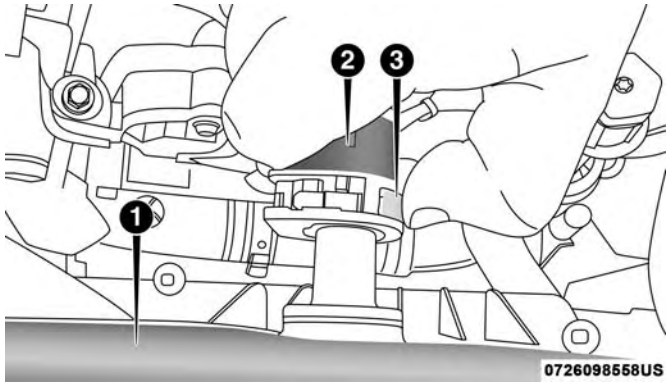

Air Cleaner Air Hose — If Equipped

1 — Air Filter Cleaner Cover
2 — Air Hose (If Equipped)
3 — Quick Connect Clip

3. Lift the air cleaner cover to access the air cleaner filter.

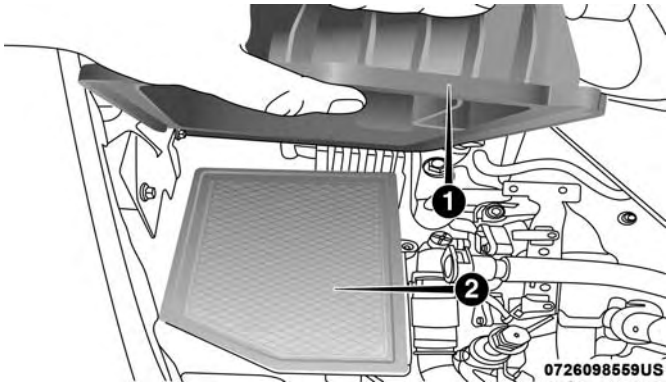

Open Air Cleaner Filter Assembly

1 — Air Cleaner Cover
2 — Air Cleaner Filter

4. Remove the air cleaner filter element from the housing assembly.

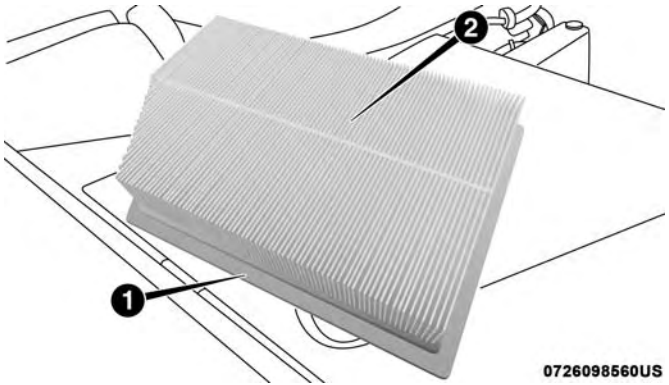

Air Cleaner Filter

1 — Air Cleaner Filter
2 — Air Cleaner Filter Inspection Surface

Engine Air Cleaner Filter Installation

NOTE: Inspect and clean the housing if dirt or debris is present before replacing the air filter element.

1. Install the air cleaner filter element into the housing assembly with the air cleaner filter inspection surface facing downward.
2. Install the air cleaner cover onto the housing assembly locating tabs.
3. Install screws to secure the air cleaner cover to the housing assembly and install air hose (if equipped).

Accessory Drive Belt Inspection

WARNING!

- **Do not attempt to inspect an accessory drive belt with vehicle running.**
- **When working near the radiator cooling fan, disconnect the fan motor lead. The fan is temperature controlled and can start at any time regardless of ignition mode. You could be injured by the moving fan blades.**

(Continued)

WARNING! *(Continued)*

- **You can be badly injured working on or around a motor vehicle. Only do service work for which you have the knowledge and the proper equipment. If you have any doubt about your ability to perform a service job, take your vehicle to a competent mechanic.**

When inspecting accessory drive belts, small cracks that run across ribbed surface of belt from rib to rib, are considered normal. These are not a reason to replace belt. However, cracks running along a rib (not across) are not normal. Any belt with cracks running along a rib must be replaced. Also have the belt replaced if it has excessive wear, frayed cords or severe glazing.

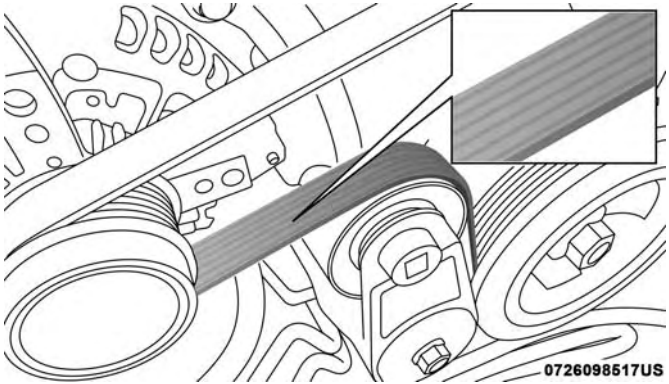

Accessory Belt (Serpentine Belt)

Conditions that would require replacement:

- Rib chunking (one or more ribs has separated from belt body)
- Rib or belt wear
- Longitudinal belt cracking (cracks between two ribs)
- Belt slips
- "Groove jumping" (belt does not maintain correct position on pulley)
- Belt broken (note: identify and correct problem before new belt is installed)
- Noise (objectionable squeal, squeak, or rumble is heard or felt while drive belt is in operation)

Some conditions can be caused by a faulty component such as a belt pulley. Belt pulleys should be carefully inspected for damage and proper alignment.

Belt replacement on some models requires the use of special tools, we recommend having your vehicle serviced at an authorized dealer.

Air Conditioner Maintenance

For best possible performance, your air conditioner should be checked and serviced by an authorized dealer at the start of each warm season. This service should include cleaning of the condenser fins and a performance test. Drive belt tension should also be checked at this time.

WARNING!

- **Use only refrigerants and compressor lubricants approved by the manufacturer for your air conditioning system. Some unapproved refrigerants are flammable and can explode, injuring you. Other unapproved refrigerants or lubricants can cause the system to fail, requiring costly repairs. Refer to**

(Continued)

WARNING! *(Continued)*

Warranty Information Book, located in your owner's information kit, for further warranty information.

- **The air conditioning system contains refrigerant under high pressure. To avoid risk of personal injury or damage to the system, adding refrigerant or any repair requiring lines to be disconnected should be done by an experienced technician.**

CAUTION!

Do not use chemical flushes in your air conditioning system as the chemicals can damage your air conditioning components. Such damage is not covered by the New Vehicle Limited Warranty.

Refrigerant Recovery And Recycling R134a — If Equipped

R-134a Air Conditioning Refrigerant is a hydrofluorocarbon (HFC) that is an ozone-friendly substance. The manufacturer recommends that air conditioning service be performed by an authorized dealer or other service facilities using recovery and recycling equipment.

NOTE: Use only manufacturer approved A/C system PAG compressor oil and refrigerants.

Refrigerant Recovery And Recycling — R–1234yf

R–1234yf Air Conditioning Refrigerant is a hydrofluoroolefin (HFO) that is endorsed by the Environmental Protection Agency and is an ozone-friendly substance with a low global-warming potential. The manufacturer recommends that air conditioning service be performed by authorized dealer using recovery and recycling equipment.

NOTE: Use only manufacturer approved A/C system PAG compressor oil, and refrigerants.

Air Conditioning Filter Replacement (A/C Air Filter)

WARNING!

Do not remove the cabin air filter while the vehicle is running, or while the ignition is in the ACC or ON/RUN mode. With the cabin air filter removed and the blower operating, the blower can contact hands and may propel dirt and debris into your eyes, resulting in personal injury.

The A/C air filter is located in front of the evaporator on the lower right of center console. Perform the following procedure to replace the filter:

1. Remove the passenger side console closeout cover.
2. Pull the console closeout cover rearward to disengage the front retaining tab and remove the cover.

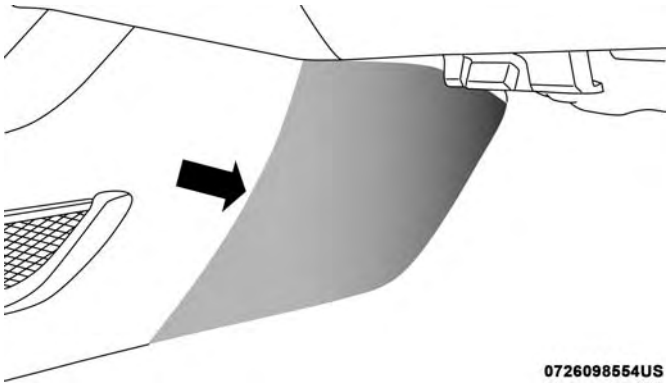

Console Closeout Panel

3. Pull down the passenger hush panel under the dash panel

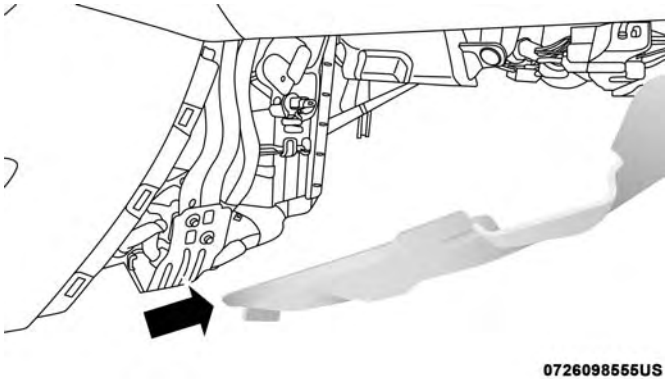

Hush Panel

4. Remove the filter door by pushing down the tab on the top of the door to release the cover then rotate the door out and lift up.

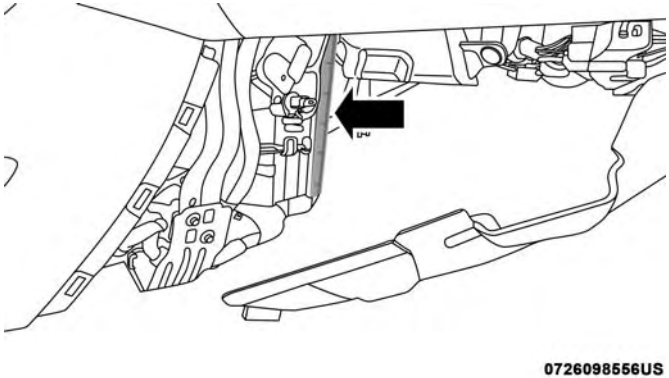

Air Filter Cover Location

5. Remove the A/C air filter by pulling it straight out of the housing. Take note of the air filter position indicators.

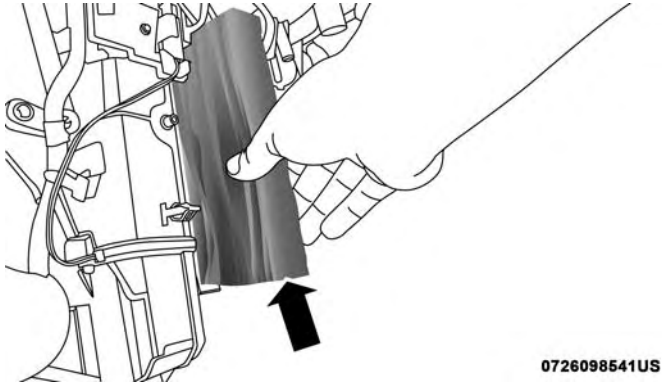

A/C Air Filter

6. Install the A/C air filter with the air filter position indicators pointing in the same direction as removal.

CAUTION!

The cabin air filter is identified with an arrow to indicate airflow direction through the filter. Failure to properly install the filter will result in the need to replace it more often.

7. Install the passenger side hush panel under the dash panel and console closeout.

Refer to the "Maintenance Plan" for the proper maintenance intervals.

Body Lubrication

Locks and all body pivot points, including such items as seat tracks, door hinge pivot points and rollers, liftgate, tailgate, decklid, sliding doors and hood hinges, should be lubricated periodically with a lithium based grease, such as Mopar Spray White Lube to assure quiet, easy operation and to protect against rust and wear. Prior to the application of any lubricant, the parts concerned should be wiped clean to remove dust and grit; after lubricating excess oil and grease should be removed. Particular attention should also be given to hood latching components to ensure proper function. When performing other underhood services, the hood latch, release mechanism and safety catch should be cleaned and lubricated.

The external lock cylinders should be lubricated twice a year, preferably in the Fall and Spring. Apply a small amount of a high quality lubricant, such as Mopar Lock Cylinder Lubricant directly into the lock cylinder.

Windshield Wiper Blades

Clean the rubber edges of the wiper blades and the windshield periodically with a sponge or soft cloth and a mild nonabrasive cleaner. This will remove accumulations of salt or road film.

Operation of the wipers on dry glass for long periods may cause deterioration of the wiper blades. Always use washer fluid when using the wipers to remove salt or dirt from a dry windshield.

Avoid using the wiper blades to remove frost or ice from the windshield. Keep the blade rubber out of contact with petroleum products such as engine oil, gasoline, etc.

NOTE: Life expectancy of wiper blades varies depending on geographical area and frequency of use. Poor performance of blades may be present with chattering, marks, water lines or wet spots. If any of these conditions are present, clean the wiper blades or replace as necessary.

The wiper blades and wiper arms should be inspected periodically, not just when wiper performance problems are experienced. This inspection should include the following points:

- Wear or uneven edges
- Foreign material
- Hardening or cracking
- Deformation or fatigue

If a wiper blade or wiper arm is damaged, replace the affected wiper arm or blade with a new unit. Do not attempt to repair a wiper arm or blade that is damaged.

Front Wiper Blade Removal/Installation

CAUTION!
Do not allow the wiper arm to spring back against the glass without the wiper blade in place or the glass may be damaged.

1. Lift the wiper arm to raise the wiper blade off of the glass, until the wiper arm is in the full up position.

Wiper Blade With Release Tab In Locked Position

1 — Wiper
2 — Release Tab
3 — Wiper Arm

2. To disengage the wiper blade from the wiper arm, flip up the release tab on the wiper blade and while holding the wiper arm with one hand, slide the wiper blade down towards the base of the wiper arm.

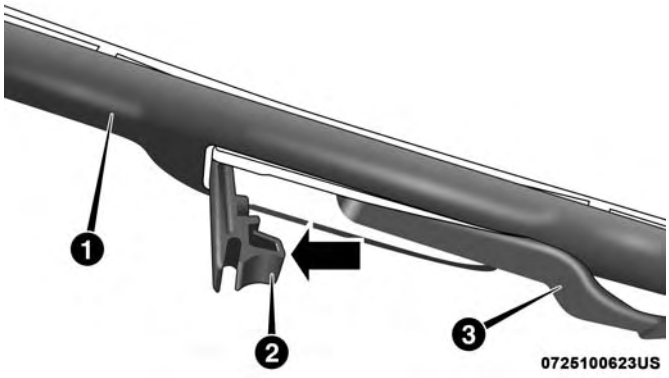

Wiper Blade With Release Tab In Unlocked Position

1 — Wiper Blade
2 — Release Tab
3 — Wiper Arm

3. With the wiper blade disengaged, remove the wiper blade from the wiper arm by holding the wiper arm with one hand and separating the wiper blade from the wiper arm with the other hand (move the wiper blade toward the right side of the vehicle to separate the wiper blade from the wiper arm).

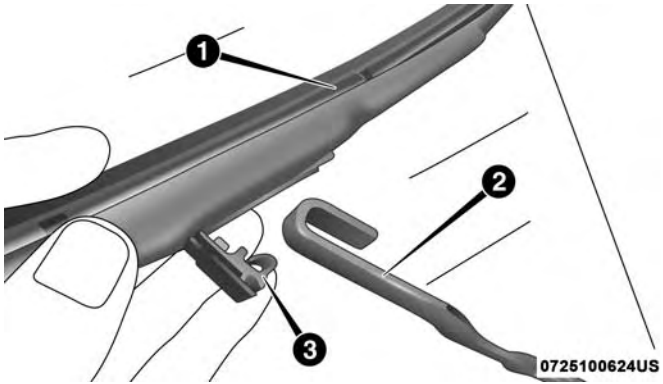

Wiper Blade Removed From Wiper Arm

1 — Wiper Blade
2 — Wiper Arm
3 — Release Tab

4. Gently lower the wiper arm onto the glass.

Installing The Front Wipers

1. Lift the wiper arm off of the glass, until the wiper arm is in the full up position.
2. Position the wiper blade near the hook on the tip of the wiper arm with the wiper release tab open and the blade side of the wiper facing up and away from the windshield.
3. Insert the hook on the tip of the arm through the opening in the wiper blade under the release tab.
4. Slide the wiper blade up into the hook on the wiper arm and rotate the wiper blade until it is flush against the wiper arm. Fold down the latch release tab and snap it into its locked position. Latch engagement will be accompanied by an audible click.
5. Gently lower the wiper blade onto the glass.

Rear Wiper Blade Removal/Installation

1. Lift the rear wiper arm pivot cap away from the glass to allow the rear wiper blade to be raised off of the glass.

NOTE: The rear wiper arm cannot be fully raised off the glass unless the wiper arm pivot cap is unsnapped first. Attempting to fully raise the rear wiper arm without unsnapping the wiper arm pivot cap may damage the vehicle.

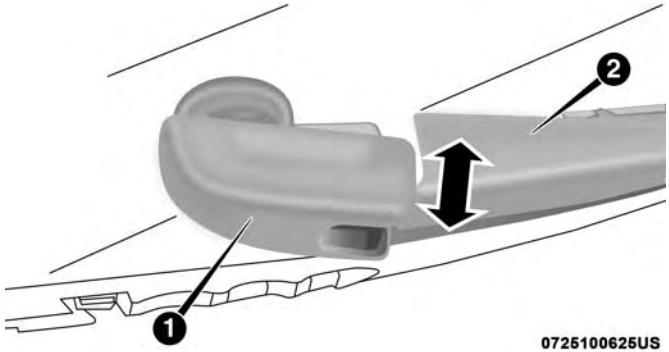

Wiper Pivot Cap In Unlocked Position

1 — Wiper Arm Pivot Cap
2 — Wiper Arm

2. Lift the rear wiper arm fully off the glass.

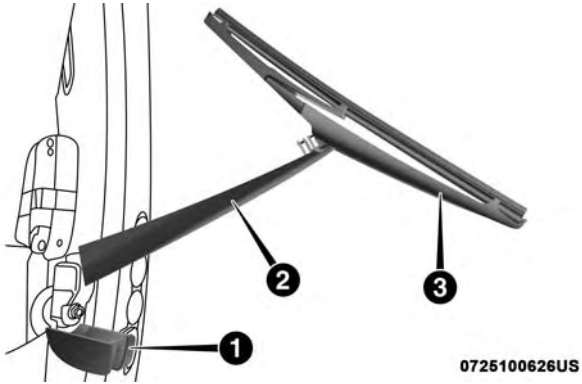

Wiper Blade In Folded Out Position

1 — Wiper Arm Pivot Cap
2 — Wiper Arm
3 — Wiper Blade

3. To remove the wiper blade from the wiper arm, grasp the bottom end of the wiper blade nearest to wiper arm with your right hand. With your left hand hold the wiper arm as you pull the wiper blade away from the wiper arm past its stop far enough to unsnap the wiper blade pivot pin from the receptacle on the end of the wiper arm.

NOTE: Resistance will be accompanied by an audible snap.

4. Still grasping the bottom end of the wiper blade, move the wiper blade upward and away from the wiper arm to disengage.

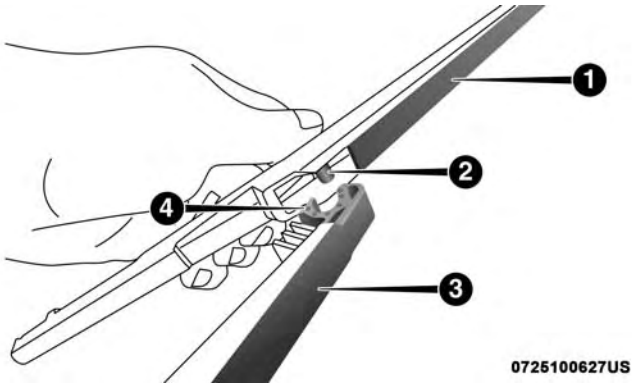

Wiper Blade Removed From Wiper Arm

1 — Wiper Blade
2 — Wiper Blade Pivot Pin
3 — Wiper Arm
4 — Wiper Arm Receptacle

5. Gently lower the tip of the wiper arm onto the glass.

Installing The Rear Wiper

1. Lift the rear wiper arm pivot cap away from the glass to allow the rear wiper blade to be raised off of the glass.

NOTE: The rear wiper arm cannot be fully raised off the glass unless the wiper arm pivot cap is unsnapped first. Attempting to fully raise the rear wiper arm without unsnapping the wiper arm pivot cap may damage the vehicle.

2. Lift the rear wiper arm fully off the glass.
3. Insert the wiper blade pivot pin into the opening on the end of the wiper arm. Grab the bottom end of the wiper arm with one hand, and apply pressure on the wiper blade flush with the wiper arm until it snaps into place.
4. Lower the wiper blade onto the glass and snap the wiper arm pivot cap back into place.

Exhaust System

The best protection against carbon monoxide entry into the vehicle body is a properly maintained engine exhaust system.

If you notice a change in the sound of the exhaust system; or if the exhaust fumes can be detected inside the vehicle; or when the underside or rear of the vehicle is damaged; have an authorized technician inspect the complete exhaust system and adjacent body areas for broken, damaged, deteriorated, or mispositioned parts. Open seams or loose connections could permit exhaust fumes to seep into the passenger compartment. In addition, have the exhaust system inspected each time the vehicle is raised for lubrication or oil change. Replace as required.

WARNING!

- **Exhaust gases can injure or kill. They contain carbon monoxide (CO), which is colorless and odorless. Breathing it can make you unconscious and can eventually poison you. To avoid breathing CO, refer to “Safety Tips” in “Safety” for further information.**
- **A hot exhaust system can start a fire if you park over materials that can burn. Such materials might be grass or leaves coming into contact with your exhaust system. Do not park or operate your vehicle in areas where your exhaust system can contact anything that can burn.**

CAUTION!

- **The catalytic converter requires the use of unleaded fuel only. Leaded gasoline will destroy the effectiveness of the catalyst as an emissions control device and may seriously reduce engine performance and cause serious damage to the engine.**
- **Damage to the catalytic converter can result if your vehicle is not kept in proper operating condition. In the event of engine malfunction, particularly involving engine misfire or other apparent loss of performance, have your vehicle serviced promptly. Continued operation of your vehicle with a severe malfunction could cause the converter to overheat, resulting in possible damage to the converter and vehicle.**

Under normal operating conditions, the catalytic converter will not require maintenance. However, it is important to keep the engine properly tuned to assure proper catalyst operation and prevent possible catalyst damage.

NOTE: Intentional tampering with emissions control systems can result in civil penalties being assessed against you.

In unusual situations involving grossly malfunctioning engine operation, a scorching odor may suggest severe and abnormal catalyst overheating. If this occurs, stop the vehicle, turn off the engine and allow it to cool. Service, including a tune-up to manufacturer's specifications, should be obtained immediately.

To minimize the possibility of catalytic converter damage:

- Do not interrupt the ignition when the transmission is in gear and the vehicle is in motion.
- Do not try to start the vehicle by pushing or towing the vehicle.
- Do not idle the engine with any ignition components disconnected or removed, such as when diagnostic testing, or for prolonged periods during very rough idle or malfunctioning operating conditions.

Cooling System

WARNING!

- **Turn vehicle off and disconnect the fan motor lead before working near the radiator cooling fan.**
- **You or others can be badly burned by hot engine coolant (antifreeze) or steam from your radiator. If you see or hear steam coming from under the hood, do not open the hood until the radiator has had time to cool. Never open a cooling system pressure cap when the radiator or coolant bottle is hot.**
- **Keep hands, tools, clothing, and jewelry away from the radiator cooling fan when the hood is raised. The fan starts automatically and may start at any time, whether the engine is running or not.**
- **When working near the radiator cooling fan, disconnect the fan motor lead or turn the ignition to the OFF mode. The fan is temperature controlled and can start at any time the ignition is in the ON mode.**
- **You or others can be badly burned by hot engine coolant (antifreeze) or steam from your radiator. If you see or hear steam coming from under the hood, do not open the hood until the radiator has had time to cool. Never try to open a cooling system pressure cap when the radiator is hot.**

Engine Coolant Checks

Check the engine coolant (antifreeze) protection every 12 months (before the onset of freezing weather, where applicable). If the engine coolant (antifreeze) is dirty, the system should be drained, flushed, and refilled with fresh OAT coolant (conforming to MS.90032) by an authorized dealer. Check the front of the A/C condenser for any accumulation of bugs, leaves, etc. If dirty, clean by gently spraying water from a garden hose vertically down the face of the condenser.

Check the engine cooling system hoses for brittle rubber, cracking, tears, cuts, and tightness of the connection at the coolant recovery bottle and radiator. Inspect the entire system for leaks. DO NOT REMOVE THE COOLANT PRESSURE CAP WHEN THE COOLING SYSTEM IS HOT.

Cooling System — Drain, Flush And Refill

NOTE: Some vehicles require special tools to add coolant properly. Failure to fill these systems properly could lead to severe internal engine damage. If any coolant is needed to be added to the system please contact your local authorized dealer.

If the engine coolant (antifreeze) is dirty or contains visible sediment, have an authorized dealer clean and flush with OAT coolant (antifreeze) (conforming to MS.90032).

Refer to the "Maintenance Plan" in this section for the proper maintenance intervals.

Selection Of Coolant

Refer to "Fluids And Lubricants" in "Technical Specifications" for further information.

CAUTION!

- **Mixing of engine coolant (antifreeze) other than specified Organic Additive Technology (OAT) engine coolant (antifreeze), may result in engine damage and may decrease corrosion protection. Organic Additive Technology (OAT) engine coolant is different and should not be mixed with Hybrid Organic Additive Technology (HOAT) engine coolant (antifreeze) or any "globally compatible" coolant (antifreeze). If a non-OAT engine coolant (antifreeze) is introduced into the cooling system in an emergency,**

(Continued)

CAUTION! ***(Continued)***

the cooling system will need to be drained, flushed, and refilled with fresh OAT coolant (conforming to MS.90032), by an authorized dealer as soon as possible.

- **Do not use water alone or alcohol-based engine coolant (antifreeze) products. Do not use additional rust inhibitors or antirust products, as they may not be compatible with the radiator engine coolant and may plug the radiator.**
- **This vehicle has not been designed for use with propylene glycol-based engine coolant (antifreeze). Use of propylene glycol-based engine coolant (antifreeze) is not recommended.**

Adding Coolant

Your vehicle has been built with an improved engine coolant (OAT coolant conforming to MS.90032) that allows extended maintenance intervals. This engine coolant (antifreeze) can be used up to ten years or 150,000 miles (240,000 km) before replacement. To prevent reducing this extended maintenance period, it is important that you use the same engine coolant (OAT coolant conforming to MS.90032) throughout the life of your vehicle.

Please review these recommendations for using Organic Additive Technology (OAT) engine coolant (antifreeze) that meets the requirements of FCA Material Standard MS.90032. When adding engine coolant (antifreeze):

- We recommend using Mopar Antifreeze/Coolant 10 Year/150,000 Mile (240,000 km) Formula OAT (Organic Additive Technology) that meets the requirements of FCA Material Standard MS.90032.
- Mix a minimum solution of 50% OAT engine coolant that meets the requirements of FCA Material Standard MS.90032 and distilled water. Use higher concentrations (not to exceed 70%) if temperatures below –34°F (–37°C) are anticipated. Please contact your authorized dealer for assistance.
- Use only high purity water such as distilled or deionized water when mixing the water/engine coolant (antifreeze) solution. The use of lower quality water will reduce the amount of corrosion protection in the engine cooling system.

NOTE:

- It is the owner's responsibility to maintain the proper level of protection against freezing according to the temperatures occurring in the area where the vehicle is operated.
- Some vehicles require special tools to add coolant properly. Failure to fill these systems properly could lead to severe internal engine damage. If any coolant is needed to be added to the system, please contact your local authorized dealer.
- Mixing engine coolant (antifreeze) types is not recommended and can result in cooling system damage. If HOAT and OAT coolant are mixed in an emergency, have a authorized dealer drain, flush, and refill with OAT coolant (conforming to MS.90032) as soon as possible.

Cooling System Pressure Cap

The cap must be fully tightened to prevent loss of engine coolant (antifreeze), and to ensure that engine coolant (antifreeze) will return to the radiator from the coolant expansion bottle/recovery tank if so equipped.

The cap should be inspected and cleaned if there is any accumulation of foreign material on the sealing surfaces.

WARNING!

- **Do not open hot engine cooling system. Never add engine coolant (antifreeze) when the engine is overheated. Do not loosen or remove the cap to cool an overheated engine. Heat causes pressure to build up in the cooling system. To prevent scalding or injury, do not remove the pressure cap while the system is hot or under pressure.**
- **Do not use a pressure cap other than the one specified for your vehicle. Personal injury or engine damage may result.**

Disposal Of Used Coolant

Used ethylene glycol-based coolant (antifreeze) is a regulated substance requiring proper disposal. Check with your local authorities to determine the disposal rules for your community. To prevent ingestion by animals or children, do not store ethylene glycol-based coolant in open containers or allow it to remain in puddles on the ground. If ingested by a child or pet, seek emergency assistance immediately. Clean up any ground spills immediately.

Coolant Level

The coolant bottle provides a quick visual method for determining that the coolant level is adequate. With the engine OFF and cold, the level of the engine coolant (antifreeze) in the bottle should be between the ranges indicated on the bottle.

The radiator normally remains completely full, so there is no need to remove the radiator/coolant pressure cap unless checking for engine coolant (antifreeze) freeze point or replacing coolant. Advise your service attendant of this. As long as the engine operating temperature is satisfactory, the coolant bottle need only be checked once a month.

When additional engine coolant (antifreeze) is needed to maintain the proper level, only OAT coolant that meets the requirements of FCA Material Standard MS.90032 should be added to the coolant bottle. Do not overfill.

Points To Remember

NOTE: When the vehicle is stopped after a few miles/kilometers of operation, you may observe vapor coming from the front of the engine compartment. This is normally a result of moisture from rain, snow, or high humidity accumulating on the radiator and being vaporized when the thermostat opens, allowing hot engine coolant (antifreeze) to enter the radiator.

If an examination of your engine compartment shows no evidence of radiator or hose leaks, the vehicle may be safely driven. The vapor will soon dissipate.

- Do not overfill the coolant expansion bottle.
- Check the coolant freeze point in the radiator and in the coolant expansion bottle. If engine coolant (antifreeze) needs to be added, the contents of the coolant expansion bottle must also be protected against freezing.
- If frequent engine coolant (antifreeze) additions are required, the cooling system should be pressure tested for leaks.
- Maintain engine coolant (antifreeze) concentration at a minimum of 50% OAT coolant (conforming to MS.90032) and distilled water for proper corrosion protection of your engine which contains aluminum components.
- Make sure that the coolant expansion bottle overflow hoses are not kinked or obstructed.
- Keep the front of the radiator clean. If your vehicle is equipped with air conditioning, keep the front of the condenser clean.
- Do not change the thermostat for Summer or Winter operation. If replacement is ever necessary, install ONLY the correct type thermostat. Other designs may result in unsatisfactory engine coolant (antifreeze) performance, poor gas mileage, and increased emissions.

Brake System

In order to assure brake system performance, all brake system components should be inspected periodically. Refer to the “Maintenance Plan” in this section for the proper maintenance intervals.

WARNING!

Riding the brakes can lead to brake failure and possibly a collision. Driving with your foot resting or riding on the brake pedal can result in abnormally high brake temperatures, excessive lining wear, and possible brake damage. You would not have your full braking capacity in an emergency.

Fluid Level Check — Brake Master Cylinder

The fluid level of the master cylinder should be checked whenever the vehicle is serviced, or immediately if the brake system warning light is on. If necessary, add fluid to bring level within the designated marks on the side of the reservoir of the brake master cylinder. Be sure to clean the top of the master cylinder area before removing cap. With disc brakes, fluid level can be expected to fall as the brake pads wear. Brake fluid level should be checked when pads are replaced. If the brake fluid is abnormally low, check system for leaks.

Refer to "Fluids And Lubricants" in "Technical Specifications" for further information.

WARNING!

- **Use only manufacturer's recommended brake fluid. Refer to "Fluids And Lubricants" in "Technical Specifications" for further information. Using the wrong type of brake fluid can severely damage your brake system and/or impair its performance. The proper type of brake fluid for your vehicle is also identified on the original factory installed hydraulic master cylinder reservoir.**
- **To avoid contamination from foreign matter or moisture, use only new brake fluid or fluid that has been in a tightly closed container. Keep the master cylinder reservoir cap secured at all times. Brake fluid in a open container absorbs moisture from the air resulting in a lower boiling point. This may cause it to boil unexpectedly during hard or prolonged braking, resulting in sudden brake failure. This could result in a collision.**
- **Overfilling the brake fluid reservoir can result in spilling brake fluid on hot engine parts, causing the brake fluid to catch fire. Brake fluid can also damage painted and vinyl surfaces, care should be taken to avoid its contact with these surfaces.**

(Continued)

WARNING! *(Continued)*

- **Do not allow petroleum based fluid to contaminate the brake fluid. Brake seal components could be damaged, causing partial or complete brake failure. This could result in a collision.**

Automatic Transmission

Selection Of Lubricant

It is important to use the proper transmission fluid to ensure optimum transmission performance and life. Use only the manufacturer's specified transmission fluid. Refer to "Fluids And Lubricants" in "Technical Specifications" for fluid specifications. It is important to maintain the transmission fluid at the correct level using the recommended fluid.

NOTE: No chemical flushes should be used in any transmission; only the approved lubricant should be used.

CAUTION!

Using a transmission fluid other than the manufacturer's recommended fluid may cause deterioration in

(Continued)

CAUTION! *(Continued)*

transmission shift quality and/or torque converter shudder. Refer to "Fluids And Lubricants" in "Technical Specifications" for fluid specifications.

Special Additives

The manufacturer strongly recommends against using any special additives in the transmission. Automatic Transmission Fluid (ATF) is an engineered product and its performance may be impaired by supplemental additives. Therefore, do not add any fluid additives to the transmission. Avoid using transmission sealers as they may adversely affect seals.

CAUTION!

Do not use chemical flushes in your transmission as the chemicals can damage your transmission components. Such damage is not covered by the New Vehicle Limited Warranty.

Fluid Level Check

The fluid level is preset at the factory and does not require adjustment under normal operating conditions. Routine fluid level checks are not required; therefore the transmission has no dipstick. Your authorized dealer can check your transmission fluid level using special service tools. If you notice fluid leakage or transmission malfunction, visit your authorized dealer immediately to have the transmission fluid level checked. Operating the vehicle with an improper fluid level can cause severe transmission damage.

CAUTION!

If a transmission fluid leak occurs, visit your authorized dealer immediately. Severe transmission damage may occur. Your authorized dealer has the proper tools to adjust the fluid level accurately.

Fluid And Filter Changes

Under normal operating conditions, the fluid installed at the factory will provide satisfactory lubrication for the life of the vehicle.

Routine fluid and filter changes are not required. However, change the fluid and filter if the fluid becomes contaminated (with water, etc.), or if the transmission is disassembled for any reason.

RAISING THE VEHICLE

In the case where it is necessary to raise the vehicle, go to your authorized dealer or service station.

TIRES

Tire Safety Information

Tire safety information will cover aspects of the following information: Tire Markings, Tire Identification Numbers, Tire Terminology and Definitions, Tire Pressures, and Tire Loading.

Tire Markings

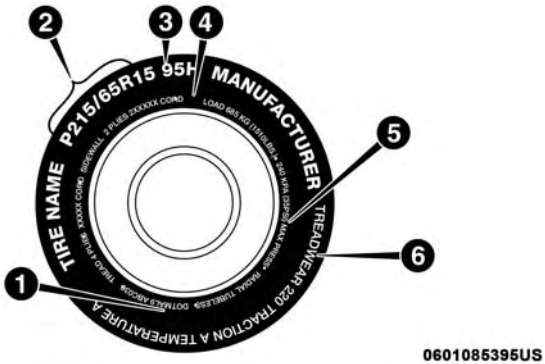

Tire Markings

1 — U.S. DOT Safety Standards Code (TIN)	4 — Maximum Load
2 — Size Designation	5 — Maximum Pressure
3 — Service Description	6 — Treadwear, Traction and Temperature Grades

NOTE:

- P (Passenger) — Metric tire sizing is based on U.S. design standards. P-Metric tires have the letter "P" molded into the sidewall preceding the size designation. Example: P215/65R15 95H.
- European — Metric tire sizing is based on European design standards. Tires designed to this standard have the tire size molded into the sidewall beginning with the section width. The letter "P" is absent from this tire size designation. Example: 215/65R15 96H.
- LT (Light Truck) — Metric tire sizing is based on U.S. design standards. The size designation for LT-Metric tires is the same as for P-Metric tires except for the letters "LT" that are molded into the sidewall preceding the size designation. Example: LT235/85R16.
- Temporary spare tires are designed for temporary emergency use only. Temporary high pressure compact spare tires have the letter "T" or "S" molded into the sidewall preceding the size designation. Example: T145/80D18 103M.
- High flotation tire sizing is based on U.S. design standards and it begins with the tire diameter molded into the sidewall. Example: 31x10.5 R15 LT.

Tire Sizing Chart

EXAMPLE:

Example Size Designation: P215/65R15XL 95H, 215/65R15 96H, LT235/85R16C, T145/80D18 103M, 31x10.5 R15 LT
P = Passenger car tire size based on U.S. design standards, or **"....blank...."** = Passenger car tire based on European design standards, or **LT** = Light truck tire based on U.S. design standards, or **T or S** = Temporary spare tire or **31** = Overall diameter in inches (in)
215, 235, 145 = Section width in millimeters (mm)
65, 85, 80 = Aspect ratio in percent (%) – Ratio of section height to section width of tire, or **10.5** = Section width in inches (in)
R = Construction code – "R" means radial construction, or – "D" means diagonal or bias construction
15, 16, 18 = Rim diameter in inches (in)
Service Description:
95 = Load Index – A numerical code associated with the maximum load a tire can carry

EXAMPLE:

H = Speed Symbol

– A symbol indicating the range of speeds at which a tire can carry a load corresponding to its load index under certain operating conditions
– The maximum speed corresponding to the speed symbol should only be achieved under specified operating conditions (i.e., tire pressure, vehicle loading, road conditions, and posted speed limits)

Load Identification:

Absence of the following load identification symbols on the sidewall of the tire indicates a Standard Load (SL) tire:

- **XL** = Extra load (or reinforced) tire, or
- **LL** = Light load tire or
- **C, D, E, F, G** = Load range associated with the maximum load a tire can carry at a specified pressure

Maximum Load – Maximum load indicates the maximum load this tire is designed to carry

Maximum Pressure – Maximum pressure indicates the maximum permissible cold tire inflation pressure for this tire

Tire Identification Number (TIN)

The TIN may be found on one or both sides of the tire; however, the date code may only be on one side. Tires with white sidewalls will have the full TIN, including the date code, located on the white sidewall side of the tire. Look for the TIN on the outboard side of black sidewall tires as mounted on the vehicle. If the TIN is not found on the outboard side, then you will find it on the inboard side of the tire.

EXAMPLE:
DOT MA L9 ABCD 0301
DOT = Department of Transportation – This symbol certifies that the tire is in compliance with the U.S. Department of Transportation tire safety standards and is approved for highway use
MA = Code representing the tire manufacturing location (two digits)
L9 = Code representing the tire size (two digits)
ABCD = Code used by the tire manufacturer (one to four digits)
03 = Number representing the week in which the tire was manufactured (two digits) – 03 means the 3rd week
01 = Number representing the year in which the tire was manufactured (two digits) – 01 means the year 2001 – Prior to July 2000, tire manufacturers were only required to have one number to represent the year in which the tire was manufactured. Example: 031 could represent the 3rd week of 1981 or 1991

Tire Terminology And Definitions

Term	Definition
B-Pillar	The vehicle B-Pillar is the structural member of the body located behind the front door.
Cold Tire Inflation Pressure	Cold tire inflation pressure is defined as the tire pressure after the vehicle has not been driven for at least three hours, or driven less than 1 mile (1.6 km) after sitting for a minimum of three hours. Inflation pressure is measured in units of PSI (pounds per square inch) or kPa (kilopascals).
Maximum Inflation Pressure	The maximum inflation pressure is the maximum permissible cold tire inflation pressure for this tire. The maximum inflation pressure is molded into the sidewall.
Recommended Cold Tire Inflation Pressure	Vehicle manufacturer's recommended cold tire inflation pressure as shown on the tire placard.
Tire Placard	A label permanently attached to the vehicle describing the vehicle's loading capacity, the original equipment tire sizes and the recommended cold tire inflation pressures.

Tire Loading And Tire Pressure

NOTE: The proper cold tire inflation pressure is listed on the driver's side B-Pillar or the rear edge of the driver's side door.

Check the inflation pressure of each tire, including the spare tire (if equipped), at least monthly and inflate to the recommended pressure for your vehicle.

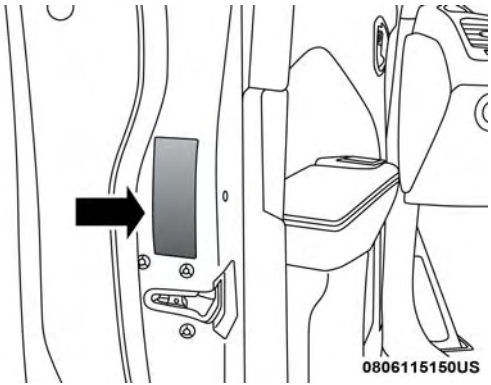

Example Tire Placard Location (Door)

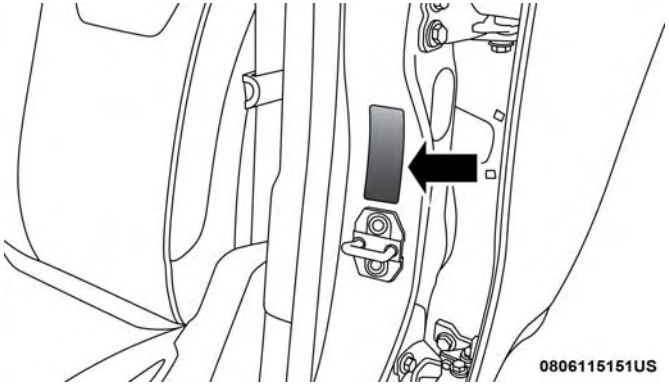

Example Tire Placard Location (B-Pillar)

Tire And Loading Information Placard

Tire And Loading Information Placard

This placard tells you important information about the:

1. Number of people that can be carried in the vehicle.
2. Total weight your vehicle can carry.
3. Tire size designed for your vehicle.
4. Cold tire inflation pressures for the front, rear, and spare tires.

Loading

The vehicle maximum load on the tire must not exceed the load carrying capacity of the tire on your vehicle. You will not exceed the tire's load carrying capacity if you adhere to the loading conditions, tire size, and cold tire inflation pressures specified on the Tire and Loading Information placard in "Vehicle Loading" in the "Starting And Operating" section of this manual.

NOTE: Under a maximum loaded vehicle condition, gross axle weight ratings (GAWRs) for the front and rear axles must not be exceeded.

For further information on GAWRs, vehicle loading, and trailer towing, refer to "Vehicle Loading" in the "Starting And Operating" section of this manual.

To determine the maximum loading conditions of your vehicle, locate the statement "The combined weight of occupants and cargo should never exceed XXX kg or XXX lbs" on the Tire and Loading Information placard. The combined weight of occupants, cargo/luggage and trailer tongue weight (if applicable) should never exceed the weight referenced here.

Steps For Determining Correct Load Limit—

(1) Locate the statement "The combined weight of occupants and cargo should never exceed XXX kg or XXX lbs." on your vehicle's placard.

(2) Determine the combined weight of the driver and passengers that will be riding in your vehicle.

(3) Subtract the combined weight of the driver and passengers from XXX kg or XXX lbs.

(4) The resulting figure equals the available amount of cargo and luggage load capacity. For example, if "XXX" amount equals 1400 lbs. and there will be five 150 lb passengers in your vehicle, the amount of available cargo and luggage load capacity is 650 lbs. (1400-750 (5x150) = 650 lbs.)

(5) Determine the combined weight of luggage and cargo being loaded on the vehicle. That weight may not safely exceed the available cargo and luggage load capacity calculated in Step 4.

(6) If your vehicle will be towing a trailer, load from your trailer will be transferred to your vehicle. Consult this manual to determine how this reduces the available cargo and luggage load capacity of your vehicle.

Metric Example For Load Limit

For example, if "XXX" amount equals 635 kg and there will be five 68 kg passengers in your vehicle, the amount of available cargo and luggage load capacity is 295 kg (635-340 (5x68) = 295 kg) as shown in step 4.

NOTE:

- If your vehicle will be towing a trailer, load from your trailer will be transferred to your vehicle. The following table shows examples on how to calculate total load, cargo/luggage, and towing capacities of your vehicle with varying seating configurations and number and size of occupants. This table is for illustration purposes only and may not be accurate for the seating and load carry capacity of your vehicle.
- For the following example, the combined weight of occupants and cargo should never exceed 865 lbs (392 kg).

Occupants			Combined weight of occupants and cargo from Tire Placard	MINUS	Combined Occupant's weight	=	AVAILABLE Cargo/Luggage and Trailer Tongue Weight
TOTAL	FRONT	REAR					
EXAMPLE 1							
5	2	3			Occupant 1: 200 lbs Occupant 2: 130 lbs Occupant 3: 160 lbs Occupant 4: 100 lbs Occupant 5: 80 lbs TOTAL WEIGHT: 670 lbs		
			865 lbs	minus	670 lbs	=	195 lbs
EXAMPLE 2							
3	2	1			Occupant 1: 210 lbs Occupant 2: 180 lbs Occupant 3: 150 lbs TOTAL WEIGHT: 540 lbs		
			865 lbs	minus	540 lbs	=	325 lbs
EXAMPLE 3							
2	2	0			Occupant 1: 200 lbs Occupant 2: 200 lbs TOTAL WEIGHT: 400 lbs		
			865 lbs	minus	400 lbs	=	465 lbs

EXAMPLE

811a4d11

WARNING!

Overloading of your tires is dangerous. Overloading can cause tire failure, affect vehicle handling, and increase your stopping distance. Use tires of the recommended load capacity for your vehicle. Never overload them.

Tires — General Information

Tire Pressure

Proper tire inflation pressure is essential to the safe and satisfactory operation of your vehicle. Four primary areas are affected by improper tire pressure:

- Safety and Vehicle Stability
- Economy
- Tread Wear
- Ride Comfort

Safety

WARNING!

- **Improperly inflated tires are dangerous and can cause collisions.**
- **Underinflation increases tire flexing and can result in overheating and tire failure.**
- **Overinflation reduces a tire's ability to cushion shock. Objects on the road and chuckholes can cause damage that result in tire failure.**

(Continued)

WARNING! *(Continued)*

- **Overinflated or underinflated tires can affect vehicle handling and can fail suddenly, resulting in loss of vehicle control.**
- **Unequal tire pressures can cause steering problems. You could lose control of your vehicle.**
- **Unequal tire pressures from one side of the vehicle to the other can cause the vehicle to drift to the right or left.**
- **Always drive with each tire inflated to the recommended cold tire inflation pressure.**

Both under-inflation and over-inflation affect the stability of the vehicle and can produce a feeling of sluggish response or over responsiveness in the steering.

NOTE:

- Unequal tire pressures from side to side may cause erratic and unpredictable steering response.
- Unequal tire pressure from side to side may cause the vehicle to drift left or right.

Fuel Economy

Underinflated tires will increase tire rolling resistance resulting in higher fuel consumption.

Tread Wear

Improper cold tire inflation pressures can cause abnormal wear patterns and reduced tread life, resulting in the need for earlier tire replacement.

Ride Comfort And Vehicle Stability

Proper tire inflation contributes to a comfortable ride. Over-inflation produces a jarring and uncomfortable ride.

Tire Inflation Pressures

The proper cold tire inflation pressure is listed on the driver's side B-Pillar or rear edge of the driver's side door.

At least once a month:

- Check and adjust tire pressure with a good quality pocket-type pressure gauge. Do not make a visual judgement when determining proper inflation. Tires may look properly inflated even when they are under-inflated.
- Inspect tires for signs of tire wear or visible damage.

CAUTION!

After inspecting or adjusting the tire pressure, always reinstall the valve stem cap. This will prevent moisture and dirt from entering the valve stem, which could damage the valve stem.

Inflation pressures specified on the placard are always "cold tire inflation pressure". Cold tire inflation pressure is defined as the tire pressure after the vehicle has not been driven for at least three hours, or driven less than 1 mile (1.6 km) after sitting for a minimum of three hours. The cold tire inflation pressure must not exceed the maximum inflation pressure molded into the tire sidewall.

Check tire pressures more often if subject to a wide range of outdoor temperatures, as tire pressures vary with temperature changes.

Tire pressures change by approximately 1 psi (7 kPa) per 12°F (7°C) of air temperature change. Keep this in mind when checking tire pressure inside a garage, especially in the Winter.

Example: If garage temperature = 68°F (20°C) and the outside temperature = 32°F (0°C) then the cold tire inflation pressure should be increased by 3 psi (21 kPa), which equals 1 psi (7 kPa) for every 12°F (7°C) for this outside temperature condition.

Tire pressure may increase from 2 to 6 psi (13 to 40 kPa) during operation. DO NOT reduce this normal pressure build up or your tire pressure will be too low.

Tire Pressures For High Speed Operation

The manufacturer advocates driving at safe speeds and within posted speed limits. Where speed limits or conditions are such that the vehicle can be driven at high speeds, maintaining correct tire inflation pressure is very important. Increased tire pressure and reduced vehicle loading may be required for high-speed vehicle operation. Refer to your authorized tire dealer or original equipment vehicle dealer for recommended safe operating speeds, loading and cold tire inflation pressures.

WARNING!

High speed driving with your vehicle under maximum load is dangerous. The added strain on your tires could

(Continued)

WARNING! *(Continued)*

cause them to fail. You could have a serious collision. Do not drive a vehicle loaded to the maximum capacity at continuous speeds above 75 mph (120 km/h).

Radial Ply Tires

WARNING!

Combining radial ply tires with other types of tires on your vehicle will cause your vehicle to handle poorly. The instability could cause a collision. Always use radial ply tires in sets of four. Never combine them with other types of tires.

Tire Repair

If your tire becomes damaged, it may be repaired if it meets the following criteria:

- The tire has not been driven on when flat.
- The damage is only on the tread section of your tire (sidewall damage is not repairable).
- The puncture is no greater than a ¼ of an inch (6 mm).

Consult an authorized tire dealer for tire repairs and additional information.

Damaged Run Flat tires, or Run Flat tires that have experienced a loss of pressure should be replaced immediately with another Run Flat tire of identical size and service description (Load Index and Speed Symbol).

Run Flat Tires — If Equipped

Run Flat tires allow you the capability to drive 50 miles (80 km) at 50 mph (80 km/h) after a rapid loss of inflation pressure. This rapid loss of inflation is referred to as the Run Flat mode. A Run Flat mode occurs when the tire inflation pressure is of/or below 14 psi (96 kPa). Once a Run Flat tire reaches the run flat mode it has limited driving capabilities and needs to be replaced immediately. A Run Flat tire is not repairable.

It is not recommended driving a vehicle loaded at full capacity or to tow a trailer while a tire is in the run flat mode.

See the tire pressure monitoring section for more information.

Tire Spinning

When stuck in mud, sand, snow, or ice conditions, do not spin your vehicle's wheels above 30 mph (48 km/h) or for longer than 30 seconds continuously without stopping.

Refer to "Freeing A Stuck Vehicle" in "In Case Of Emergency" for further information.

WARNING!

Fast spinning tires can be dangerous. Forces generated by excessive wheel speeds may cause tire damage or failure. A tire could explode and injure someone. Do not spin your vehicle's wheels faster than 30 mph (48 km/h) for more than 30 seconds continuously when you are stuck, and do not let anyone near a spinning wheel, no matter what the speed.

Tread Wear Indicators

Tread wear indicators are in the original equipment tires to help you in determining when your tires should be replaced.

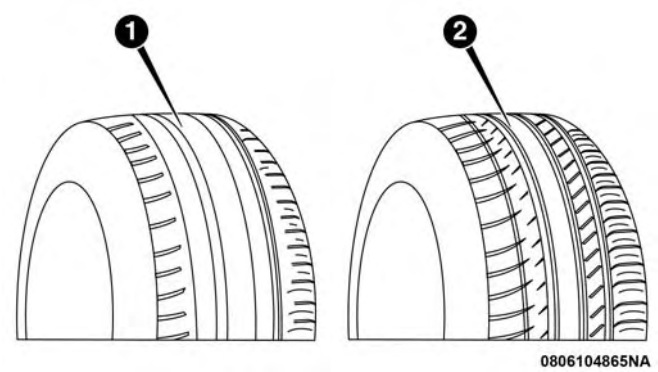

Tire Tread

1 — Worn Tire
2 — New Tire

These indicators are molded into the bottom of the tread grooves. They will appear as bands when the tread depth becomes a 1/16 of an inch (1.6 mm). When the tread is worn to the tread wear indicators, the tire should be replaced. Refer to "Replacement Tires" in this section for further information.

Life Of Tire

The service life of a tire is dependent upon varying factors including, but not limited to:

- Driving style.
- Tire pressure - Improper cold tire inflation pressures can cause uneven wear patterns to develop across the tire tread. These abnormal wear patterns will reduce tread life, resulting in the need for earlier tire replacement.
- Distance driven.
- Performance tires, tires with a speed rating of V or higher, and Summer tires typically have a reduced tread life. Rotation of these tires per the vehicle scheduled maintenance is highly recommended.

WARNING!

Tires and the spare tire should be replaced after six years, regardless of the remaining tread. Failure to follow this warning can result in sudden tire failure. You could lose control and have a collision resulting in serious injury or death.

Keep dismounted tires in a cool, dry place with as little exposure to light as possible. Protect tires from contact with oil, grease, and gasoline.

Replacement Tires

The tires on your new vehicle provide a balance of many characteristics. They should be inspected regularly for wear and correct cold tire inflation pressures. The manufacturer strongly recommends that you use tires equivalent to the originals in size, quality and performance when replacement is needed. Refer to the paragraph on "Tread Wear Indicators" in this section. Refer to the Tire and Loading Information placard or the Vehicle Certification Label for the size designation of your tire. The Load Index and Speed Symbol for your tire will be found on the original equipment tire sidewall.

See the Tire Sizing Chart example found in the "Tire Safety Information" section of this manual for more information relating to the Load Index and Speed Symbol of a tire.

It is recommended to replace the two front tires or two rear tires as a pair. Replacing just one tire can seriously affect your vehicle's handling. If you ever replace a wheel, make sure that the wheel's specifications match those of the original wheels.

It is recommended you contact your authorized tire dealer or original equipment dealer with any questions you may have on tire specifications or capability. Failure to use equivalent replacement tires may adversely affect the safety, handling, and ride of your vehicle.

WARNING!

- **Do not use a tire, wheel size, load rating, or speed rating other than that specified for your vehicle. Some combinations of unapproved tires and wheels may change suspension dimensions and performance characteristics, resulting in changes to steering, handling, and braking of your vehicle. This can cause unpredictable handling and stress to steering and suspension components. You could lose control and have a collision resulting in serious injury or death. Use only the tire and wheel sizes with load ratings approved for your vehicle.**
- **Never use a tire with a smaller load index or capacity, other than what was originally equipped on your vehicle. Using a tire with a smaller load index could result in tire overloading and failure. You could lose control and have a collision.**

(Continued)

WARNING! *(Continued)*

- **Failure to equip your vehicle with tires having adequate speed capability can result in sudden tire failure and loss of vehicle control.**

CAUTION!

Replacing original tires with tires of a different size may result in false speedometer and odometer readings.

Tire Types

All Season Tires — If Equipped

All Season tires provide traction for all seasons (Spring, Summer, Fall, and Winter). Traction levels may vary between different all season tires. All season tires can be identified by the M+S, M&S, M/S or MS designation on the tire sidewall. Use all season tires only in sets of four; failure to do so may adversely affect the safety and handling of your vehicle.

Summer Or Three Season Tires — If Equipped

Summer tires provide traction in both wet and dry conditions, and are not intended to be driven in snow or on ice. If your vehicle is equipped with Summer tires, be aware these tires are not designed for Winter or cold driving conditions. Install Winter tires on your vehicle when ambient temperatures are less than 40°F (5°C) or if roads are covered with ice or snow. For more information, contact an authorized dealer.

Summer tires do not contain the all season designation or mountain/snowflake symbol on the tire sidewall. Use Summer tires only in sets of four; failure to do so may adversely affect the safety and handling of your vehicle.

WARNING!

Do not use Summer tires in snow/ice conditions. You could lose vehicle control, resulting in severe injury or death. Driving too fast for conditions also creates the possibility of loss of vehicle control.

Snow Tires

Some areas of the country require the use of snow tires during the Winter. Snow tires can be identified by a "mountain/snowflake" symbol on the tire sidewall.

If you need snow tires, select tires equivalent in size and type to the original equipment tires. Use snow tires only in sets of four; failure to do so may adversely affect the safety and handling of your vehicle.

Snow tires generally have lower speed ratings than what was originally equipped with your vehicle and should not be operated at sustained speeds over 75 mph (120 km/h). For speeds above 75 mph (120 km/h) refer to original equipment or an authorized tire dealer for recommended safe operating speeds, loading and cold tire inflation pressures.

While studded tires improve performance on ice, skid and traction capability on wet or dry surfaces may be poorer than that of non-studded tires. Some states prohibit studded tires; therefore, local laws should be checked before using these tire types.

Spare Tires — If Equipped

NOTE: For vehicles equipped with Tire Service Kit instead of a spare tire, please refer to "Tire Service Kit" in "In Case Of Emergency" for further information.

CAUTION!

Because of the reduced ground clearance, do not take your vehicle through an automatic car wash with a compact or limited use temporary spare installed. Damage to the vehicle may result.

Spare Tire Matching Original Equipped Tire And Wheel — If Equipped

Your vehicle may be equipped with a spare tire and wheel equivalent in look and function to the original equipment tire and wheel found on the front or rear axle of your vehicle. This spare tire may be used in the tire rotation for your vehicle. If your vehicle has this option, refer to an authorized tire dealer for the recommended tire rotation pattern.

Compact Spare Tire — If Equipped

The compact spare is for temporary emergency use only. You can identify if your vehicle is equipped with a compact spare by looking at the spare tire description on the Tire and Loading Information Placard located on the driver's side door opening or on the sidewall of the tire. Compact spare tire descriptions begin with the letter "T" or "S" preceding the size designation. Example: T145/80D18 103M.

T, S = Temporary Spare Tire

Since this tire has limited tread life, the original equipment tire should be repaired (or replaced) and reinstalled on your vehicle at the first opportunity.

Do not install a wheel cover or attempt to mount a conventional tire on the compact spare wheel, since the wheel is designed specifically for the compact spare tire. Do not install more than one compact spare tire and wheel on the vehicle at any given time.

WARNING!

Compact and collapsible spares are for temporary emergency use only. With these spares, do not drive more than 50 mph (80 km/h). Temporary use spares have limited tread life. When the tread is worn to the tread wear indicators, the temporary use spare tire needs to be replaced. Be sure to follow the warnings, which apply to your spare. Failure to do so could result in spare tire failure and loss of vehicle control.

Full Size Spare — If Equipped

The full size spare is for temporary emergency use only. This tire may look like the originally equipped tire on the front or rear axle of your vehicle, but it is not. This spare tire may have limited tread life. When the tread is worn to the tread wear indicators, the temporary use full size spare tire needs to be replaced. Since it is not the same as your original equipment tire, replace (or repair) the original equipment tire and reinstall on the vehicle at the first opportunity.

Limited Use Spare — If Equipped

The limited use spare tire is for temporary emergency use only. This tire is identified by a label located on the limited use spare wheel. This label contains the driving limitations for this spare. This tire may look like the original equipped tire on the front or rear axle of your vehicle, but it is not. Installation of this limited use spare tire affects vehicle handling. Since it is not the same as your original equipment tire, replace (or repair) the original equipment tire and reinstall on the vehicle at the first opportunity.

WARNING!

Limited use spares are for emergency use only. Installation of this limited use spare tire affects vehicle handling. With this tire, do not drive more than the speed listed on the limited use spare wheel. Keep inflated to the cold tire inflation pressures listed on your Tire and Loading Information Placard located on the driver's side B-Pillar or the rear edge of the driver's side door. Replace (or repair) the original equipment tire at the first opportunity and reinstall it on your vehicle. Failure to do so could result in loss of vehicle control.

Wheel And Wheel Trim Care

All wheels and wheel trim, especially aluminum and chrome plated wheels, should be cleaned regularly using mild (neutral Ph) soap and water to maintain their luster and to prevent corrosion. Wash wheels with the same soap solution recommended for the body of the vehicle.

Your wheels are susceptible to deterioration caused by salt, sodium chloride, magnesium chloride, calcium chloride, etc., and other road chemicals used to melt ice or control dust on dirt roads. Use a soft cloth or sponge and mild soap to wipe away promptly. Do not use harsh chemicals or a stiff brush. They can damage the wheel's protective coating that helps keep them from corroding and tarnishing.

CAUTION!

Avoid products or automatic car washes that use acidic solutions or strong alkaline additives or harsh brushes. These products and automatic car washes may damage the wheel's protective finish. Such damage is not covered by the New Vehicle Limited Warranty. Only car wash soap, Mopar Wheel Cleaner or equivalent is recommended.

When cleaning extremely dirty wheels including excessive brake dust, care must be taken in the selection of tire and wheel cleaning chemicals and equipment to prevent damage to the wheels. Mopar Wheel Treatment or Mopar Chrome Cleaner or their equivalent is recommended or select a non-abrasive, non-acidic cleaner for aluminum or chrome wheels.

CAUTION!

Do not use scouring pads, steel wool, a bristle brush, metal polishes or oven cleaner. These products may damage the wheel's protective finish. Such damage is not covered by the New Vehicle Limited Warranty. Only car wash soap, Mopar Wheel Cleaner or equivalent is recommended.

NOTE: If you intend parking or storing your vehicle for an extended period after cleaning the wheels with wheel cleaner, drive your vehicle and apply the brakes to remove the water droplets from the brake components. This activity will remove the red rust on the brake rotors and prevent vehicle vibration when braking.

Dark Vapor Chrome, Black Satin Chrome, or Low Gloss Clear Coat Wheels

CAUTION!

If your vehicle is equipped with Dark Vapor or Black Satin Chrome wheels DO NOT USE wheel cleaners, abrasives or polishing compounds. They will permanently damage this finish and such damage is not covered by the New Vehicle Limited Warranty. USE ONLY MILD SOAP AND WATER WITH A SOFT CLOTH. Used on a regular basis; this is all that is required to maintain this finish.

Tire Chains (Traction Devices)

Use of traction devices require sufficient tire-to-body clearance. Follow these recommendations to guard against damage.

- Traction device must be of proper size for the tire, as recommended by the traction device manufacturer
- Use on Front Tires Only

- Due to limited clearance, the following traction devices are recommended:

Front Wheel Drive (FWD) Models

- Original equipment 225/60R17 and 225/55R18 tire sizes are not chainable.
- The use of 7 mm snow chains is permitted with the use of 215/60R17 tires on size 17 x 7.0 ET41 wheels.

Four Wheel Drive (4WD) Non-Trailhawk Models without a Two-Speed Power Takeoff Unit

- Original equipment 225/65R17 and 225/60R18 tire sizes are not chainable.
- The use of 9 mm snow chains is permitted with the use of 215/60R17 tires on size 17 x 7.0 ET41 wheels.

Four Wheel Drive (4WD) Non-Trailhawk Models with a Two-Speed Power Takeoff Unit

- The use of 7 mm snow chains is permitted with 225/65R17 and 225/60R18 tires.

Four Wheel Drive (4WD) Trailhawk Models

- The use of 9 mm snow chains is permitted with the use of 225/65R17 tires on size 17 x 7.5 ET31 wheels.

WARNING!

Using tires of different size and type (M+S, Snow) between front and rear axles can cause unpredictable handling. You could lose control and have a collision.

CAUTION!

- **Use on Front Tires Only**
- **Damage to Front Wheel Drive (FWD) Models may result if tire chains or traction devices are used with original equipment size tires.**
- **Damage to Four Wheel Drive (4WD) Models without a Two-Speed Power Takeoff Unit may result if tire chains or traction devices are used with original equipment size tires.**
- **Damage to Four Wheel Drive (4WD) Trailhawk Models may result if tire chains or traction devices are used with original equipment size tires.**

To avoid damage to your vehicle or tires, observe the following precautions:

- **Because of restricted traction device clearance between tires and other suspension components, it is**

(Continued)

CAUTION! *(Continued)*

important that only traction devices in good condition are used. Broken devices can cause serious damage. Stop the vehicle immediately if noise occurs that could indicate device breakage. Remove the damaged parts of the device before further use.

- **Install device as tightly as possible and then retighten after driving about ½ mile (0.8 km).**
- **Do not exceed 30 mph (48 km/h).**
- **Drive cautiously and avoid severe turns and large bumps, especially with a loaded vehicle.**
- **Do not drive for a prolonged period on dry pavement.**
- **Observe the traction device manufacturer's instructions on the method of installation, operating speed, and conditions for use. Always use the suggested operating speed of the device manufacturer's if it is less than 30 mph (48 km/h).**
- **Do not use traction devices on a compact spare tire.**

Tire Rotation Recommendations

The tires on the front and rear of your vehicle operate at different loads and perform different steering, handling, and braking functions. For these reasons, they wear at unequal rates.

These effects can be reduced by timely rotation of tires. The benefits of rotation are especially worthwhile with aggressive tread designs such as those on On/Off Road type tires. Rotation will increase tread life, help to maintain mud, snow, and wet traction levels, and contribute to a smooth, quiet ride.

Refer to the "Maintenance Plan" for the proper maintenance intervals. The reasons for any rapid or unusual wear should be corrected prior to rotation being performed.

The suggested Front Wheel Drive (FWD) rotation method is the "forward cross" shown in the following diagram. This rotation pattern does not apply to some directional tires that must not be reversed.

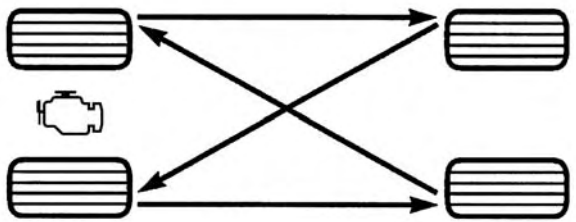

055707139

Front Wheel Drive (FWD) Tire Rotation

The suggested Four Wheel Drive (4WD) Tire rotation method is the "rearward cross" shown in the following diagram.

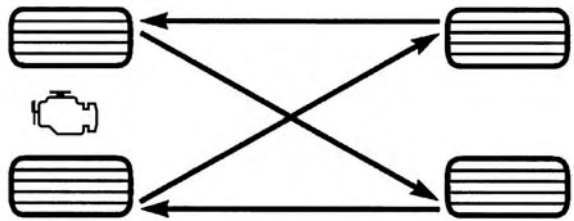

055703771

Four Wheel Drive (4WD) Tire Rotation

CAUTION!

Proper operation of four-wheel drive vehicles depends on tires of equal size, type and circumference on each wheel. Any difference in tire size can cause damage to the power transfer unit. Tire rotation schedule should be followed to balance tire wear.

DEPARTMENT OF TRANSPORTATION UNIFORM TIRE QUALITY GRADES

The following tire grading categories were established by the National Highway Traffic Safety Administration. The specific grade rating assigned by the tire's manufacturer in each category is shown on the sidewall of the tires on your vehicle.

All passenger vehicle tires must conform to Federal safety requirements in addition to these grades.

Treadwear

The Treadwear grade is a comparative rating, based on the wear rate of the tire when tested under controlled conditions on a specified government test course. For example, a tire graded 150 would wear one and one-half times as well on the government course as a tire graded 100. The relative performance of tires depends upon the actual conditions of their use, however, and may depart significantly from the norm due to variations in driving habits, service practices, and differences in road characteristics and climate.

Traction Grades

The Traction grades, from highest to lowest, are AA, A, B, and C. These grades represent the tire's ability to stop on wet pavement, as measured under controlled conditions on specified government test surfaces of asphalt and concrete. A tire marked C may have poor traction performance.

WARNING!

The traction grade assigned to this tire is based on straight-ahead braking traction tests, and does not include acceleration, cornering, hydroplaning, or peak traction characteristics.

Temperature Grades

The Temperature grades are A (the highest), B, and C, representing the tire's resistance to the generation of heat and its ability to dissipate heat, when tested under controlled conditions on a specified indoor laboratory test wheel.

Sustained high temperature can cause the material of the tire to degenerate and reduce tire life, and excessive temperature can lead to sudden tire failure. The grade C corresponds to a level of performance, which all passenger vehicle tires must meet under the Federal Motor Vehicle Safety Standard No. 109. Grades B and A represent higher levels of performance on the laboratory test wheel, than the minimum required by law.

WARNING!

The temperature grade for this tire is established for a tire that is properly inflated and not overloaded. Excessive speed, under-inflation, or excessive loading, either separately or in combination, can cause heat buildup and possible tire failure.

STORING THE VEHICLE

If the vehicle should remain stationary for more than a month, observe the following precautions:

- Park your vehicle in a covered, dry and possibly airy location the windows open slightly.
- Check that the Electric Park Brake is not engaged.
- Disconnect the negative (-) terminal from the battery post and be sure that the battery is fully charged. During storage check battery charge quarterly.
- If you do not disconnect the battery from the electrical system, check the battery charge every 30 days.
- Clean and protect the painted parts by applying protective waxes.
- Clean and protect polished metal parts by applying protective waxes.
- Apply talcum powder to the front and rear wiper blades and leave raised from the glass.
- Cover the vehicle with an appropriate cover taking care not to damage the painted surface by dragging across dirty surfaces. Do not use plastic sheeting which will not allow the evaporation of moisture present on the surface of the vehicle.
- Inflate the tires at a pressure of +7.25 psi (+0.5 bar) higher than recommended on the tire placard and check it periodically.
- Do not drain the engine cooling system.

- Whenever you leave the vehicle is stationary for two weeks or more, run idle the engine for approximately five minutes, with the air conditioning system on and high fan speed. This will ensure a proper lubrication of the system, thus minimizing the possibility of damage to the compressor when the vehicle is put back into operation.

NOTE: When the vehicle has not been started or driven for at least 30 days, an Extended Park Start Procedure is required to start the vehicle. Refer to "Starting The Engine" in "Starting And Operating" for further information.

CAUTION!

Before removal of the positive and negative terminals to the battery, wait at least a minute with ignition switch in the OFF position and close the driver's door. When reconnecting the positive and negative terminals to the battery be sure the ignition switch is in the OFF position and the driver's door is closed.

BODYWORK

Protection From Atmospheric Agents

Vehicle body care requirements vary according to geographic locations and usage. Chemicals that make roads passable in snow and ice and those that are sprayed on trees and road surfaces during other seasons are highly corrosive to the metal in your vehicle. Outside parking, which exposes your vehicle to airborne contaminants, road surfaces on which the vehicle is operated, extreme hot or cold weather and other extreme conditions will have an adverse effect on paint, metal trim, and underbody protection.

The following maintenance recommendations will enable you to obtain maximum benefit from the corrosion resistance built into your vehicle.

What Causes Corrosion?

Corrosion is the result of deterioration or removal of paint and protective coatings from your vehicle.

The most common causes are:

- Road salt, dirt and moisture accumulation.
- Stone and gravel impact.
- Insects, tree sap and tar.
- Salt in the air near seacoast localities.
- Atmospheric fallout/industrial pollutants.

Body And Underbody Maintenance

Cleaning Headlights

Your vehicle is equipped with plastic headlights and fog lights that are lighter and less susceptible to stone breakage than glass headlights.

Plastic is not as scratch resistant as glass and therefore different lens cleaning procedures must be followed.

To minimize the possibility of scratching the lenses and reducing light output, avoid wiping with a dry cloth. To remove road dirt, wash with a mild soap solution followed by rinsing.

Do not use abrasive cleaning components, solvents, steel wool or other aggressive material to clean the lenses.

Preserving The Bodywork

Washing

- Wash your vehicle regularly. Always wash your vehicle in the shade using Mopar Car Wash, or a mild car wash soap, and rinse the panels completely with clear water.
- If insects, tar, or other similar deposits have accumulated on your vehicle, use Mopar Super Kleen Bug and Tar Remover to remove.
- Use a high quality cleaner wax, such as Mopar Cleaner Wax to remove road film, stains and to protect your paint finish. Take care never to scratch the paint.
- Avoid using abrasive compounds and power buffing that may diminish the gloss or thin out the paint finish.

CAUTION!

- **Do not use abrasive or strong cleaning materials such as steel wool or scouring powder that will scratch metal and painted surfaces.**
- **Use of power washers exceeding 1,200 psi (8,274 kPa) can result in damage or removal of paint and decals.**

Special Care

- If you drive on salted or dusty roads or if you drive near the ocean, hose off the undercarriage at least once a month.
- It is important that the drain holes in the lower edges of the doors, rocker panels, and trunk be kept clear and open.
- If you detect any stone chips or scratches in the paint, touch them up immediately. The cost of such repairs is considered the responsibility of the owner.

- If your vehicle is damaged due to a collision or similar cause that destroys the paint and protective coating, have your vehicle repaired as soon as possible. The cost of such repairs is considered the responsibility of the owner.
- If you carry special cargo such as chemicals, fertilizers, de-icer salt, etc., be sure that such materials are well packaged and sealed.
- If a lot of driving is done on gravel roads, consider mud or stone shields behind each wheel.
- Use Mopar Touch Up Paint on scratches as soon as possible. Your authorized dealer has touch up paint to match the color of your vehicle.

INTERIORS

Seats And Fabric Parts

Use Mopar Total Clean to clean fabric upholstery and carpeting.

WARNING!

Do not use volatile solvents for cleaning purposes. Many are potentially flammable, and if used in closed areas they may cause respiratory harm.

Seat Belt Maintenance

Do not bleach, dye or clean the belts with chemical solvents or abrasive cleaners. This will weaken the fabric. Sun damage can also weaken the fabric.

If the belts need cleaning, use a mild soap solution or lukewarm water. Do not remove the belts from the vehicle to wash them. Dry with a soft cloth.

Replace the belts if they appear frayed or worn or if the buckles do not work properly.

WARNING!

A frayed or torn belt could rip apart in a collision and leave you with no protection. Inspect the belt system periodically, checking for cuts, frays, or loose parts. Damaged parts must be replaced immediately. Do not disassemble or modify the system. Seat belt assemblies must be replaced after a collision if they have been damaged (i.e., bent retractor, torn webbing, etc.).

Plastic And Coated Parts

Use Mopar Total Clean to clean vinyl upholstery.

CAUTION!

- **Direct contact of air fresheners, insect repellents, suntan lotions, or hand sanitizers to the plastic, painted, or decorated surfaces of the interior may cause permanent damage. Wipe away immediately.**
- **Damage caused by these type of products may not be covered by your New Vehicle Limited Warranty.**

Cleaning Plastic Instrument Cluster Lenses

The lenses in front of the instruments in this vehicle are molded in clear plastic. When cleaning the lenses, care must be taken to avoid scratching the plastic.

1. Clean with a wet soft cloth. A mild soap solution may be used, but do not use high alcohol content or abrasive cleaners. If soap is used, wipe clean with a clean damp cloth.
2. Dry with a soft cloth.

Leather Parts

Mopar Total Clean is specifically recommended for leather upholstery.

Your leather upholstery can be best preserved by regular cleaning with a damp soft cloth. Small particles of dirt can act as an abrasive and damage the leather upholstery and should be removed promptly with a damp cloth. Stubborn soils can be removed easily with a soft cloth and Mopar Total Clean. Care should be taken to avoid soaking your leather upholstery with any liquid. Please do not use polishes, oils, cleaning fluids, solvents, detergents, or ammonia-based cleaners to clean your leather upholstery. Application of a leather conditioner is not required to maintain the original condition.

NOTE: If equipped with light colored leather, it tends to show any foreign material, dirt, and fabric dye transfer more so than darker colors. The leather is designed for easy cleaning, and FCA recommends Mopar total care leather cleaner applied on a cloth to clean the leather seats as needed.

CAUTION!

Do not use Alcohol and Alcohol-based and/or Ketone based cleaning products to clean leather seats, as damage to the seat may result.

Glass Surfaces

All glass surfaces should be cleaned on a regular basis with Mopar Glass Cleaner, or any commercial household-type glass cleaner. Never use an abrasive type cleaner. Use caution when cleaning the inside rear window equipped with electric defrosters or windows equipped with radio antennas. Do not use scrapers or other sharp instrument that may scratch the elements.

When cleaning the rear view mirror, spray cleaner on the towel or cloth that you are using. Do not spray cleaner directly on the mirror.

TECHNICAL SPECIFICATIONS

CONTENTS

- VEHICLE IDENTIFICATION NUMBER 504
- BRAKE SYSTEM 505
- WHEEL AND TIRE TORQUE SPECIFICATIONS . .505
  - Torque Specifications 505
- FUEL REQUIREMENTS 507
  - 2.4L And 3.2L Engines 507
  - Reformulated Gasoline 507
  - Gasoline/Oxygenate Blends 507
  - E-85 Usage In Non-Flex Fuel Vehicles. 508
  - CNG And LP Fuel System Modifications 508
  - MMT In Gasoline. 508
  - Materials Added To Fuel 509
  - Fuel System Cautions 509
  - Carbon Monoxide Warnings 510
- FLEXIBLE FUEL (2.4L ENGINE ONLY) — IF EQUIPPED 510
  - E-85 General Information 510
  - Ethanol Fuel (E-85). 510
  - Fuel Requirements 511
  - Selection Of Engine Oil For Flexible Fuel Vehicles (E-85) And Gasoline Vehicles 511
  - Starting 512
  - Cruising Range 512
  - Replacement Parts 512
  - Maintenance 512
- FLUID CAPACITIES 512
- FLUIDS AND LUBRICANTS 513
  - Engine 513
  - Chassis 515

VEHICLE IDENTIFICATION NUMBER

The Vehicle Identification Number (VIN) is found on the left front corner of the instrument panel. The VIN is visible from outside of the vehicle through the windshield. The VIN number also is stamped into the right front body, on the right front seat cross member. With the seat in the rear most position a flap in the carpet can be cut open and lifted to reveal the VIN. It also appears on the Automobile Information Disclosure Label affixed to a window on your vehicle, the vehicle registration, and the title.

The VIN is also stamped on either right or left hand side of the engine block.

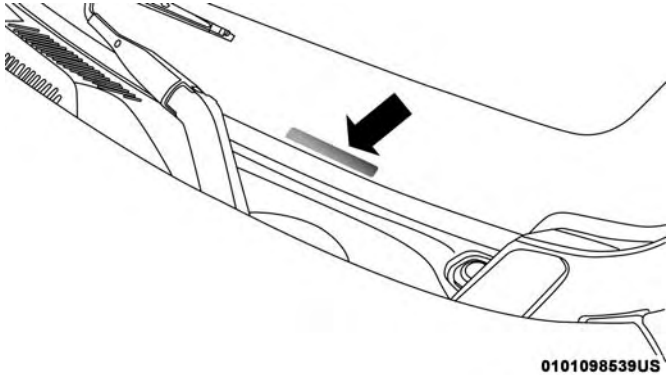

Vehicle Identification Number

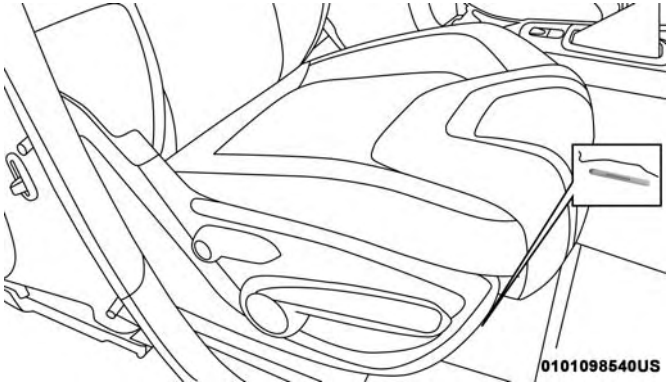

Right Front Body VIN Location

NOTE: It is illegal to remove or alter the VIN.

BRAKE SYSTEM

Your vehicle is equipped with dual hydraulic brake systems. If either of the two hydraulic systems loses normal capability, the remaining system will still function. However, there will be some loss of overall braking effectiveness. You may notice increased pedal travel during application, greater pedal force required to slow or stop, and potential activation of the "Brake System Warning Light."

In the event power assist is lost for any reason (i.e., repeated brake applications with the engine off) the brakes will still function. However, the effort required to brake the vehicle will be much greater than that required with the power system operating.

WHEEL AND TIRE TORQUE SPECIFICATIONS

Proper lug nut/bolt torque is very important to ensure that the wheel is properly mounted to the vehicle. Any time a wheel has been removed and reinstalled on the vehicle, the lug nuts/bolts should be torqued using a properly calibrated torque wrench using a high quality six sided (hex) deep wall socket.

Torque Specifications

Lug Nut/Bolt Torque	**Lug Nut/ Bolt Size	Lug Nut/ Bolt Socket Size
100 Ft-Lbs (135 N·m)	M12 x 1.25	19 mm

**Use only your authorized dealer recommended lug nuts/ bolts and clean or remove any dirt or oil before tightening.

Inspect the wheel mounting surface prior to mounting the tire and remove any corrosion or loose particles.

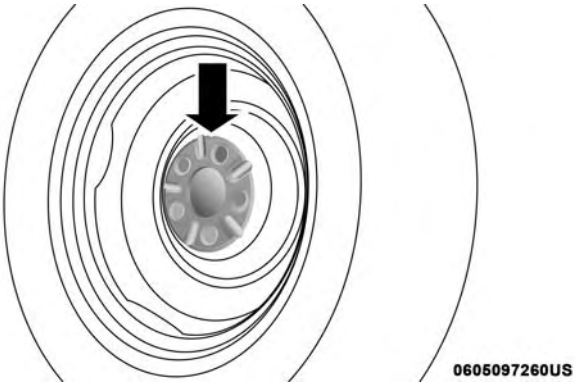

Wheel Mounting Surface

Tighten the lug nuts/bolts in a star pattern until each nut/bolt has been tightened twice. Ensure that the socket is fully engaged on the lug nut/bolt.

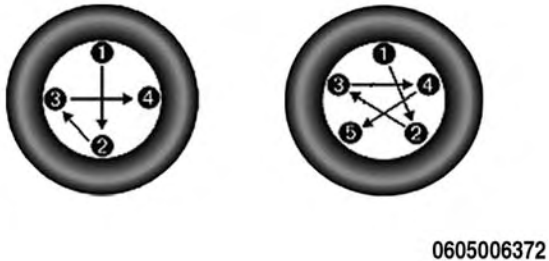

Torque Patterns

After 25 miles (40 km), check the lug nut/bolt torque to be sure that all the lug nuts/bolts are properly seated against the wheel.

WARNING!

To avoid the risk of forcing the vehicle off the jack, do not tighten the lug nuts fully until the vehicle has been lowered. Failure to follow this warning may result in personal injury.

FUEL REQUIREMENTS

2.4L And 3.2L Engines

These engines are designed to meet all emissions regulations and provide optimum fuel economy and performance when using high quality unleaded "Regular" gasoline having a posted octane number of 87 as specified by the (R+M)/2 method. The use of higher octane "Premium" gasoline is not required, as it will not provide any benefit over "Regular" gasoline in these engines.

While operating on gasoline with an octane number of 87, hearing a light knocking sound from the engine is not a cause for concern. However, if the engine is heard making a heavy knocking sound, see your dealer immediately. Use of gasoline with an octane number lower than 87 can cause engine failure and may void or not be covered by the New Vehicle Limited Warranty.

Poor quality gasoline can cause problems such as hard starting, stalling, and hesitations. If you experience these symptoms, try another brand of gasoline before considering service for the vehicle.

Reformulated Gasoline

Many areas of the country require the use of cleaner burning gasoline referred to as "Reformulated Gasoline". Reformulated gasoline contains oxygenates and are specifically blended to reduce vehicle emissions and improve air quality.

The use of reformulated gasoline is recommended. Properly blended reformulated gasoline will provide improved performance and durability of engine and fuel system components.

Gasoline/Oxygenate Blends

Some fuel suppliers blend unleaded gasoline with oxygenates such as ethanol.

CAUTION!

DO NOT use gasoline containing methanol or gasoline containing more than 15% ethanol (E-15). Use of these blends may result in starting and drivability problems, damage critical fuel system components, cause emissions to exceed the applicable standard, and/or cause the "Malfunction Indicator Light" to illuminate. Please

(Continued)

CAUTION! *(Continued)*

observe pump labels as they should clearly communicate if a fuel contains greater than 15% ethanol (E-15).

Problems that result from using gasoline containing more than 15% ethanol (E-15) or gasoline containing methanol are not the responsibility of the manufacturer and may void or not be covered under New Vehicle Limited Warranty.

E-85 Usage In Non-Flex Fuel Vehicles

Non-Flex Fuel Vehicles (FFV) are compatible with gasoline containing up to 15% ethanol (E-15). Use of gasoline with higher ethanol content may void the New Vehicle Limited Warranty.

If a Non-FFV vehicle is inadvertently fueled with E-85 fuel, the engine will have some or all of these symptoms:

- Operate in a lean mode.
- OBD II “Malfunction Indicator Light” on.
- Poor engine performance.
- Poor cold start and cold drivability.
- Increased risk for fuel system component corrosion.

CNG And LP Fuel System Modifications

Modifications that allow the engine to run on compressed natural gas (CNG) or liquid propane (LP) may result in damage to the engine, emissions, and fuel system components. Problems that result from running CNG or LP are not the responsibility of the manufacturer and may void or not be covered under the New Vehicle Limited Warranty.

MMT In Gasoline

Methylcyclopentadienyl Manganese Tricarbonyl (MMT) is a manganese-containing metallic additive that is blended into some gasoline to increase octane. Gasoline blended with MMT provides no performance advantage beyond gasoline of the same octane number without MMT. Gasoline blended with MMT reduces spark plug life and reduces emissions system performance in some vehicles. The manufacturer recommends that gasoline without MMT be used in your vehicle. The MMT content of gasoline may not be indicated on the gasoline pump; therefore, you should ask your gasoline retailer whether the gasoline contains MMT. MMT is prohibited in Federal and California reformulated gasoline.

Materials Added To Fuel

Besides using unleaded gasoline with the proper octane rating, gasolines that contain detergents, corrosion and stability additives are recommended. Using gasolines that have these additives will help improve fuel economy, reduce emissions, and maintain vehicle performance.

Designated TOP TIER Detergent Gasoline contains a higher level of detergents to further aide in minimizing engine and fuel system deposits. When available, the usage of Top Tier Detergent gasoline is recommended. Visit www.toptiergas.com for a list of TOP TIER Detergent Gasoline Retailers.

Indiscriminate use of fuel system cleaning agents should be avoided. Many of these materials intended for gum and varnish removal may contain active solvents or similar ingredients. These can harm fuel system gasket and diaphragm materials.

Fuel System Cautions

CAUTION!

Follow these guidelines to maintain your vehicle's performance:

- **The use of leaded gasoline is prohibited by Federal law. Using leaded gasoline can impair engine performance and damage the emissions control system.**
- **An out-of-tune engine or certain fuel or ignition malfunctions can cause the catalytic converter to overheat. If you notice a pungent burning odor or some light smoke, your engine may be out of tune or malfunctioning and may require immediate service. Contact your authorized dealer for service assistance.**
- **The use of fuel additives, which are now being sold as octane enhancers, is not recommended. Most of these products contain high concentrations of methanol. Fuel system damage or vehicle performance problems resulting from the use of such fuels or additives is not the responsibility of the manufacturer and may void or not be covered under the New Vehicle Limited Warranty.**

NOTE: Intentional tampering with the emissions control system can result in civil penalties being assessed against you.

Carbon Monoxide Warnings

WARNING!

Carbon monoxide (CO) in exhaust gases is deadly. Follow the precautions below to prevent carbon monoxide poisoning:

- **Do not inhale exhaust gases. They contain carbon monoxide, a colorless and odorless gas, which can kill. Never run the engine in a closed area, such as a garage, and never sit in a parked vehicle with the engine running for an extended period. If the vehicle is stopped in an open area with the engine running for more than a short period, adjust the ventilation system to force fresh, outside air into the vehicle.**
- **Guard against carbon monoxide with proper maintenance. Have the exhaust system inspected every time the vehicle is raised. Have any abnormal conditions repaired promptly. Until repaired, drive with all side windows fully open.**

FLEXIBLE FUEL (2.4L ENGINE ONLY) — IF EQUIPPED

E-85 General Information

The information in this section is unique for Flexible Fuel vehicles only. These vehicles can be identified by a unique fuel filler door label that states **Ethanol (E-85) or Unleaded Gasoline Only** and a yellow fuel cap. Please refer to the other sections of this manual for information on features that are common between Flexible Fuel and non-Flexible Fuel powered vehicles.

CAUTION!

Only vehicles with the E-85 fuel filler door label or a yellow gas cap can operate on E-85.

Ethanol Fuel (E-85)

E-85 is a mixture of approximately 85% ethanol and 15% unleaded gasoline.

WARNING!

Ethanol vapors are extremely flammable and could cause serious personal injury. Never have any smoking materials lit or products that can cause spark in or near the vehicle when removing the fuel filler tube cap (gas cap) or filling the tank. Do not use E-85 as a cleaning agent and never use it near an open flame.

Fuel Requirements

If your vehicle is E-85 compatible, it will operate on unleaded gasoline with any octane rating, or solely E-85 fuel, or any mixture of these fuels.

For best results, avoid fueling patterns alternating between E-85 and unleaded gasoline.

When switching fuel types:

- Add 5 gallons (19 liters) or more when refueling.
- Drive the vehicle immediately after refueling for at least 5 miles (8 km).

Observing these precautions will avoid possible hard starting and/or driveability problems during warm up.

NOTE:

- Use seasonally adjusted E-85 fuel (ASTM D5798). With non-seasonally adjusted E-85 fuel, hard starting and rough idle following start up may be experienced even if the above recommendations are followed, especially when the ambient temperature is below 32°F (0°C).
- Some additives used in regular gasoline are not fully compatible with E-85 and may form deposits in your engine. To eliminate driveability issues that may be caused by these deposits, a supplemental gasoline additive, such as Mopar Injector Cleanup or Techron may be used.

Selection Of Engine Oil For Flexible Fuel Vehicles (E-85) And Gasoline Vehicles

FFV vehicles operated on E-85 require specially formulated engine oils. These special requirements are included in Mopar engine oils, and in equivalent oils meeting FCA US Material Standard MS-6395. It is recommended that engine oils that are API Certified and meet the requirements of Material Standard MS-6395 be used. MS-6395 contains additional requirements, developed during extensive fleet testing, to provide additional protection to FCA US LLC engines.

Starting

The characteristics of E-85 fuel make it unsuitable for use when ambient temperatures fall below 0°F (-18°C). In the range of 0°F (-18°C) to 32°F (0°C), an increase in the time it takes for your engine to start may be experienced, and a deterioration in driveability (sags and/or hesitations) until the engine is fully warmed up. These issues may be improved with the use of seasonally adjusted E-85 fuel.

NOTE: Use of the engine block heater (if equipped) may improve engine start time when using E-85 fuel when the ambient temperature is less than 32°F (0°C).

Cruising Range

Because E-85 fuel contains less energy per gallon/liter than gasoline, an increase in fuel consumption will be experienced. The miles per gallon (mpg)/kilometers per liter and the driving range will decrease by approximately 30%, compared to gasoline operation.

Replacement Parts

All fuel and engine components in your Flexible Fuel Vehicle (FFV) are designed to be compatible with ethanol. Ethanol compatible service components are required.

CAUTION!

Replacing fuel system components with non-ethanol compatible components can damage your vehicle.

Maintenance

CAUTION!

Do not use ethanol mixture greater than 85% in your vehicle. It will cause difficulty in cold starting and may affect drivability.

FLUID CAPACITIES

	U.S.	Metric
Fuel (Approximate)		
2.4L and 3.2L Engines	15.8 Gallons	60 Liters

	U.S.	Metric
Engine Oil With Filter		
2.4 Liter Engine (SAE 0W-20, API Certified)	5.5 Quarts	5.2 Liters
3.2 Liter Engine (SAE 5W-20, API Certified)	6 Quarts	5.6 Liters
Cooling System*		
2.4 Liter Engine (Mopar Antifreeze/ Engine Coolant 10 Year/150,000 Mile Formula)	7.2 Quarts	6.8 Liters
3.2 Liter Engine (Mopar Antifreeze/ Engine Coolant 10 Year/150,000 Mile Formula)	10 Quarts	9.5 Liters
* Includes heater and coolant recovery bottle filled to MAX level.		

FLUIDS AND LUBRICANTS

Engine

Component	Fluid, Lubricant, or Genuine Part
Engine Coolant	We recommend you use Mopar Antifreeze/Coolant 10 Year/150,000 Mile Formula OAT (Organic Additive Technology) or equivalent meeting the requirements of FCA Standard MS.90032.

Component	Fluid, Lubricant, or Genuine Part
Engine Oil – 2.4L Engine	We recommend you use SAE 0W-20 API Certified Engine Oil, meeting the requirements of FCA Material Standard MS-6395 such as Mopar, Pennzoil, and Shell Helix. Refer to your engine oil filler cap for correct SAE grade.
Engine Oil – 3.2L Engine	We recommend you use API Certified SAE 5W-20 Engine Oil, meeting the requirements of FCA Material Standard MS-6395 such as Mopar, Pennzoil, and Shell Helix. Refer to your engine oil filler cap for correct SAE grade.
Engine Oil Filter	We recommend you use a Mopar Engine Oil Filter.
Spark Plugs	We recommend you use Mopar Spark Plugs.
Fuel Selection – 2.4L Flex Fuel (E-85) Engines	87 Octane, Up To 85% Ethanol.
Fuel Selection – 2.4L and 3.2L Engines	87 Octane, 0-15% Ethanol.

CAUTION!

- **Mixing of engine coolant (antifreeze) other than specified Organic Additive Technology (OAT) engine coolant (antifreeze), may result in engine damage and may decrease corrosion protection. Organic Additive Technology (OAT) engine coolant is different and should not be mixed with Hybrid Organic**

(Continued)

CAUTION! ***(Continued)***

Additive Technology (HOAT) engine coolant (antifreeze) or any "globally compatible" coolant (antifreeze). If a non-OAT engine coolant (antifreeze) is introduced into the cooling system in an emergency,

(Continued)

CAUTION! *(Continued)*

the cooling system will need to be drained, flushed, and refilled with fresh OAT coolant (conforming to MS.90032), by an authorized dealer as soon as possible.

- **Do not use water alone or alcohol-based engine coolant (antifreeze) products. Do not use additional rust inhibitors or antirust products, as they may not**

(Continued)

CAUTION! *(Continued)*

be compatible with the radiator engine coolant and may plug the radiator.

- **This vehicle has not been designed for use with propylene glycol-based engine coolant (antifreeze). Use of propylene glycol-based engine coolant (antifreeze) is not recommended.**

Chassis

Component	Fluid, Lubricant, or Genuine Part
Automatic Transmission	Use only Mopar ZF 8&9 Speed ATF Automatic Transmission Fluid, or equivalent. Failure to use the correct fluid may affect the function or performance of your transmission.
Brake Master Cylinder	We recommend you use Mopar DOT 3 Brake Fluid, SAE J1703 should be used. If DOT 3, SAE J1703 brake fluid is not available, then DOT 4 is acceptable. Use only recommended brake fluids.

MULTIMEDIA

CONTENTS

- UCONNECT RADIOS 519
- PERSONALIZED MENU BAR 519
- CYBERSECURITY 519
- UCONNECT SETTINGS 521
  - Buttons On The Faceplate 522
  - Buttons On The Touchscreen 522
  - Customer Programmable Features/Personal Settings — Uconnect 5.0 Settings 522
  - Customer Programmable Features/Personal Settings — Uconnect 8.4 Personal Settings 541
- STEERING WHEEL AUDIO CONTROLS — IF EQUIPPED 560
  - Radio Operation. 560
  - CD Player 561
- MEDIA HUB — IF EQUIPPED 561
- RADIO OPERATION AND MOBILE PHONES . . .562
  - Regulatory And Safety Information 562
- UCONNECT VOICE RECOGNITION QUICK TIPS 563
  - Introducing Uconnect 563
  - Get Started 564
  - Basic Voice Commands 565
  - Radio 566
  - Media 567
  - Phone 568
  - Voice Text Reply 569
  - Climate (8.4/8.4 NAV) 571
  - Navigation (8.4 /8.4 NAV) 571
  - Uconnect Access (8.4/8.4 NAV) 572

- Register (8.4/8.4 NAV) 573
- Vehicle Health Alert 574
- Mobile App (8.4/8.4 NAV) 574
- Voice Texting (8.4/8.4 NAV) 574
- Yelp (8.4/8.4 NAV). 576
- SiriusXM Travel Link (8.4/8.4 NAV). 576
- Siri Eyes Free — If Equipped 577
- Do Not Disturb 580
- General Information 580
- Additional Information. 581

■ CD/DVD DISC MAINTENANCE 581

UCONNECT RADIOS

For detailed information about your Uconnect radio, refer to your Uconnect Owner's Manual Supplement.

PERSONALIZED MENU BAR

The Uconnect features and services in the main menu bar are easily changed for your convenience. Simply follow these steps:

Uconnect 8.4/8.4 NAV Main Menu

1. Press the "Apps" button to open the App screen.
2. Press and hold, then drag the selected App to replace an existing shortcut in the main menu bar.

The new shortcut will now be an active App/shortcut on the main menu bar.

CYBERSECURITY

Your vehicle may be a connected vehicle and may be equipped with both wired and wireless networks. These networks allow your vehicle to send and receive information. This information allows systems and features in your vehicle to function properly.

Your vehicle may be equipped with certain security features to reduce the risk of unauthorized and unlawful access to vehicle systems and wireless communications. Vehicle software technology continues to evolve over time and FCA US LLC, working with its suppliers, evaluates and takes appropriate steps as needed. Similar to a computer or other devices, your vehicle may require software updates to improve the usability and performance of your systems or to reduce the potential risk of unauthorized and unlawful access to your vehicle systems.

The risk of unauthorized and unlawful access to your vehicle systems may still exist, even if the most recent version of vehicle software (such as Uconnect software) is installed.

WARNING!

- **It is not possible to know or to predict all of the possible outcomes if your vehicle's systems are breached. It may be possible that vehicle systems, including safety related systems, could be impaired or a loss of vehicle control could occur that may result in an accident involving serious injury or death.**
- **ONLY insert media (e.g., USB, SD card, or CD) into your vehicle if it came from a trusted source. Media of unknown origin could possibly contain malicious software, and if installed in your vehicle, it may increase the possibility for vehicle systems to be breached.**
- **As always, if you experience unusual vehicle behavior, take your vehicle to your nearest authorized dealer immediately.**

NOTE:

- FCA US LLC or your dealer may contact you directly regarding software updates.
- To help further improve vehicle security and minimize the potential risk of a security breach, vehicle owners should:
  - Routinely check www.driveuconnect.com/software-update to learn about available Uconnect software updates.
  - Only connect and use trusted media devices (e.g. personal mobile phones, USBs, CDs).

Privacy of any wireless and wired communications cannot be assured. Third parties may unlawfully intercept information and private communications without your consent. For further information, refer to "Privacy Practices - If Equipped with Uconnect 8.4 Radio" in your Uconnect Owner's Manual Supplement and "Onboard Diagnostic System (OBD II) Cybersecurity" in "Getting To Know Your Instrument Panel".

UCONNECT SETTINGS

The Uconnect system uses a combination of buttons on the touchscreen and buttons on the faceplate located on the center of the instrument panel that allow you to access and change the customer programmable features.

NOTE: Features can vary by vehicle.

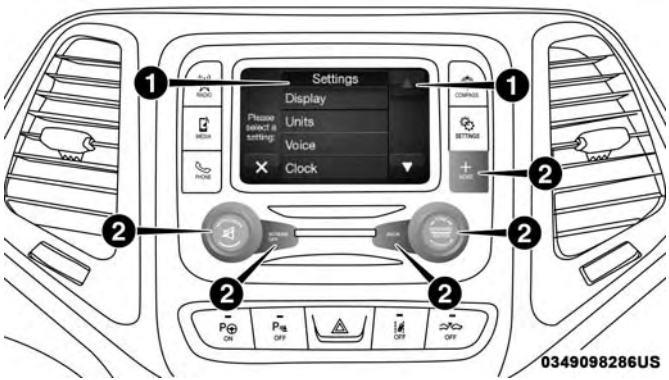

Uconnect 5.0 Buttons On The Touchscreen And Buttons On The Faceplate

1 — Uconnect Buttons On The Touchscreen
2 — Uconnect Buttons On The Faceplate

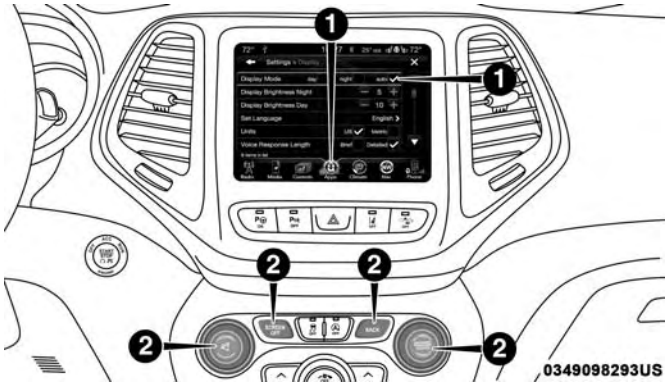

Uconnect 8.4/8.4 NAV Buttons On The Touchscreen And Buttons On The Faceplate

1 — Uconnect Buttons On The Touchscreen
2 — Uconnect Buttons On The Faceplate

Buttons On The Faceplate

Buttons on the faceplate are located below the Uconnect system in the center of the instrument panel. In addition, there is a Scroll/Enter control knob located on the right side of the Climate Controls in the center of the instrument panel. Turn the control knob to scroll through menus and change settings (i.e., 30, 60, 90), push the center of the control knob one or more times to select or change a setting (i.e., ON, OFF).

Your Uconnect system may also have Screen Off and Back buttons located below the Uconnect system.

Push the Screen Off button to turn off the Uconnect touchscreen. Push the Screen Off button a second time to turn the touchscreen on.

Push the Back button to exit out of a Menu or certain option on the Uconnect system.

Buttons On The Touchscreen

Buttons on the touchscreen are accessible on the Uconnect display.

Customer Programmable Features/Personal Settings — Uconnect 5.0 Settings

Push the SETTINGS or the MORE button on the faceplate, then the “Settings” button on the touchscreen (if equipped) to display the menu setting screen. In this mode, the Uconnect system allows you to access programmable features that may be equipped such as Display, Voice, Clock & Date, Safety & Assistance, Lights, Doors & Locks, Auto-On Comfort, Engine Off Options, Compass Settings, Audio, Phone/Bluetooth, Sirius Setup, Restore Settings, and Clear Personal Data, Brakes and System Information.

NOTE: Only one category may be selected at a time.

When making a selection, press the button on the touchscreen to enter the desired mode. Once in the desired mode, press and release the preferred setting and make your selection. Once the setting is complete, either press the Back Arrow/Done button on the touchscreen or the Back button on the faceplate to return to the previous menu or press the “X” button on the touchscreen to close out of the settings screen. Pressing the Up or Down Arrow buttons on the right side of the screen will allow you to toggle up or down through the available settings.

Display

After pressing the “Display” button on the touchscreen, the following settings will be available:

Setting Name	Selectable Options	
Display Mode	Manual	Auto
Display Brightness With Headlights ON	+	-
NOTE: To make changes to the ″Display Brightness with Headlights ON″ setting, the headlights must be on and the interior dimmer switch must not be in the ″party″ or ″parade″ positions.		
Display Brightness With Headlights OFF	+	-
NOTE: To make changes to the ″Display Brightness with Headlights OFF″ setting, the headlights must be off and the interior dimmer switch must not be in the ″party″ or ″parade″ positions.		

Setting Name	Selectable Options	
Set Language	☐	☑
NOTE: When the “Set Language” feature is selected, you may select one of multiple languages (English/Français/Español) for all display nomenclature, including the trip functions and the navigation system (if equipped). Press the “Set Language” button on the touchscreen, then press the desired language button on the touchscreen until a check-mark appears next to the language, showing that setting has been selected.		
Units	US	Metric
Touchscreen Beep	☐	☑
Navigation Turn-By-Turn In Cluster — If Equipped	☐	☑
NOTE: When the “Navigation Turn-By-Turn In Cluster” feature is selected, the turn-by-turn directions will appear in the instrument cluster display as the vehicle approaches a designated turn within a programmed route.		
Control Screen Time-Out — If Equipped	☐	☑
NOTE: When the “Control Screen Time-Out” feature is selected, the Controls Screen will stay open for five seconds before the screen times out. With the feature deselected, the screen will stay open until it is manually closed.		

Voice

After pressing the "Voice" button on the touchscreen, the following settings will be available:

Setting Name	Selectable Options		
Voice Response Length	Brief	Detailed	
Show Command List	Always	With Help	Never

Clock & Date

After pressing the "Clock & Date" button on the touchscreen, the following settings will be available:

Setting Name	Selectable Options			
Set Time and Format	12 hour	24 hour	AM	PM
NOTE: Within the "Set Time and Format" setting, press the corresponding arrow buttons on the touchscreen to adjust to the correct time.				
Set Date	Up Arrow		Down Arrow	
NOTE: Within the "Set Date" setting, press the corresponding arrow buttons on the touchscreen to adjust to the correct date.				

Safety/Assistance

After pressing the "Safety/Assistance" button on the touchscreen, the following settings will be available:

Setting Name	Selectable Options	
Forward Collision Warning (FCW) — If Equipped	Near	Far
NOTE: The Front Collision Warning (FCW) feature can be set to one of two options: Far, or Near. The default status of FCW is the Far setting. This means the system will warn you of a possible collision with the vehicle in front of you when you are farther away. This gives you the most reaction time. To change the setting for a more dynamic driving experience, select the Near setting. This warns you of a possible collision when you are much closer to the vehicle in front of you.		
Forward Collision Warning (FCW) Active Braking — If Equipped	On	Off
NOTE: The FCW system includes Advanced Brake Assist (ABA). When this feature is selected, it will apply the brakes to slow your vehicle in case of potential forward collision. The ABA applies additional brake pressure when the driver requests insufficient brake pressure to avoid a potential frontal collision. The ABA system becomes active at 5 mph (8 km/h).		

Setting Name	Selectable Options		
LaneSense Warning — If Equipped	Early	Medium	Late
NOTE: When the “LaneSense Warning“ feature is selected, it sets the distance at which the steering wheel will provide feedback for potential lane departures. The LDW sensitivity can be set to provide either an “early,” “medium,” or “late” warning zone start point.			
LaneSense Strength — If Equipped	Low	Medium	High
NOTE: When the “LaneSense Strength” feature is selected, it sets the strength of the steering wheel feedback for potential lane departures.			
ParkSense — If Equipped	Sound Only	Sound and Display	
NOTE: The Rear Park Assist system will scan for objects behind the vehicle when the gear selector is in REVERSE and the vehicle speed is less than 11 mph (18 km/h).			

Setting Name	Selectable Options		
Front ParkSense Volume — If Equipped	Low	Medium	High
Rear ParkSense Volume — If Equipped	Low	Medium	High
Rear ParkSense Braking Assist — If Equipped	☐	☑	
NOTE: When the "Rear ParkSense Braking Assist" feature is selected, the park assist system will detect objects located behind the vehicle and utilize autonomous braking to stop the vehicle.			
Tilt Mirrors In Reverse — If Equipped	On	Off	
NOTE: When the "Tilt Mirrors In Reverse" feature is selected, the exterior sideview mirrors will tilt downward when the ignition is in the RUN position and the gear selector is in the REVERSE position. The mirrors will move back to their previous position when the transmission is shifted out of REVERSE.			
Blind Spot Alert — If Equipped	Off	Lights	Lights and Chime
NOTE: When the "Blind Spot Alert" feature is selected, the Blind Spot Monitor (BSM) system is activated and will show a visual alert in the outside mirrors, or it will show a visual alert in the outside mirrors as well as play an audible alert when the turn signal is on. When "Off" is selected, the Blind Spot Monitor (BSM) system is deactivated.			

Setting Name	Selectable Options	
If your vehicle has experienced any damage in the area where the sensor is located, even if the fascia is not damaged, the sensor may have become misaligned. Take your vehicle to an authorized dealer to verify sensor alignment. A sensor that is misaligned will result in the BSM not operating to specification.		
ParkView Backup Camera Active Guide Lines — If Equipped	☐	☑
ParkView Backup Camera Fixed Guide Lines — If Equipped	☐	☑
ParkView Backup Camera Delay	Enable	Disable
NOTE: When the "ParkView Backup Camera Delay" feature is enabled, it will allow the ParkView Backup Camera display to remain on while in drive for up to ten seconds, or 8 mph (13 km/h).		
Rain Sensing Auto Wipers	☐	☑
Electric Park Brake Service Mode	☐	☑
NOTE: The "Electric Park Brake Service Mode " feature provides a means for a technician or vehicle owner to utilize a vehicle integrated, menu driven system, to command the electric park brake retraction, to service the rear foundation brakes (brake pads, calipers, rotors, etc.).		

Lights

After pressing the "Lights" button on the touchscreen, the following settings will be available:

Setting Name	Selectable Options			
Headlight Off Delay	0 sec	30 sec	60 sec	90 sec
NOTE: When the "Headlight Off Delay" feature is selected, it allows the adjustment of the amount of time the headlights remain on after the engine is shut off.				
Headlights With Wipers — If Equipped	☐		☑	
Headlight Illumination On Approach	0 sec	30 sec	60 sec	90 sec
NOTE: When the "Headlight Illumination On Approach" feature is selected, it allows the adjustment of the amount of time the headlights remain on after the doors are unlocked with the key fob.				
Auto High Beam — If Equipped	On		Off	
NOTE: When the "Auto High Beams" is selected, the high beam headlights will activate/deactivate automatically under certain conditions.				

Setting Name	Selectable Options	
Daytime Running Lights	Yes	No
Flash Lights With Lock	On	Off

Doors & Locks

After pressing the "Doors & Locks" button on the touch-screen, the following settings will be available:

Setting Name	Selectable Options	
Auto Door Locks	On	Off
NOTE: The "Auto Door Locks" feature locks all doors automatically when the vehicle reaches a speed of 12 mph (20 km/h).		
Auto Unlock On Exit	On	Off
NOTE: When the "Auto Unlock On Exit" feature is selected, all doors will unlock when the vehicle is stopped and the transmission is in the PARK or NEUTRAL position and the driver's door is opened.		

Setting Name	Selectable Options	
Flash Lights With Lock	On	Off
Horn With Lock	On	Off
Horn With Remote Start — If Equipped	On	Off
Passive Entry	On	Off
Remote Door Unlock/Door Unlock	Driver	All
NOTE: When "Driver" is selected, only the driver's door will unlock on the first push of the key fob unlock button, you must push the key fob unlock button twice to unlock the passenger's doors. When "All" is selected, all of the doors will unlock on the first press of the key fob unlock button. If "All" is programmed, all doors will unlock no matter which Passive Entry equipped door handle is grasped. If "Driver" is programmed, only the driver's door will unlock when the driver's door is grasped. Touching the handle more than once will only result in the driver's door opening once. If the driver door is opened, the interior door lock/unlock switch can be used to unlock all doors (or use key fob).		
Memory Linked To FOB — If Equipped	On	Off
NOTE: The "Memory Linked To FOB" feature provides automatic recall of all settings stored to a memory location (driver's seat, exterior mirrors, steering column position and radio station pre-sets) to enhance driver mobility when entering and exiting the vehicle.		
Power Liftgate Alert — If Equipped	On	Off

Setting Name	Selectable Options
NOTE: The "Power Liftgate Alert" feature plays an alert when the power liftgate is raising or lowering.	

Auto Comfort Systems — If Equipped

After pressing the "Auto-On Comfort & Remote Start" button on the touchscreen, the following settings will be available:

Setting Name	Selectable Options		
Auto-On Driver Heated/ Ventilated Seat & Steering Wheel With Vehicle Start — If Equipped	Off	Remote Start	All Starts
NOTE: When this feature is selected, the driver's heated seat and heated steering wheel will automatically turn on when temperatures are below 40° F (4.4° C). When temperatures are above 80° F (26.7° C), the driver vented seat will turn on.			

Engine Off Options

After pressing the "Engine Off Options" button on the touchscreen, the following settings will be available:

Setting Name	Selectable Options			
Easy Exit Seat — If Equipped	☐		☑	
NOTE: When the "Easy Exit Seat" feature is selected, it provides automatic driver seat positioning to enhance driver mobility when entering and exiting the vehicle.				
Engine Off Power Delay — If Equipped	0 sec	45 sec	5 minutes	10 minutes
NOTE: When the "Engine Off Power Delay" feature is selected, the power window switches, radio, Uconnect phone system (if equipped), DVD video system (if equipped), power sunroof (if equipped), and power outlets will remain active for up to ten minutes after the ignition is cycled to OFF. Opening either front door will cancel this feature.				
Headlight Off Delay	+		-	
NOTE: When the "Headlight Off Delay" feature is selected, it allows the adjustment of the amount of time the headlights remain on after the engine is shut off.				

Compass Settings — If Equipped

After pressing the "Compass Settings" button on the touchscreen, the following settings will be available:

NOTE: Before compass calibration is performed, the compass variance zone should be set for best results.

Setting Name	Selectable Options														
Compass Variance	1	2	3	4	5	6	7	8	9	10	11	12	13	14	15

NOTE:
When the "Compass Variance" feature is selected, it allows the compass variance to be set to any number from 1 to 15 per the compass variance zone map figure.
Compass Variance is the difference between Magnetic North and Geographic North. To compensate for the differences, the variance should be set for the zone where the vehicle is being driven, illustrated in the zone map. Once properly set, the compass will automatically compensate for the differences when calibrated, and provide the most accurate compass headings.

Setting Name	Selectable Options
Compass Calibration	Yes

NOTE:
Press "Compass Calibration" on the touchscreen to enter calibration. To start calibration of the compass, press the "Yes" button on the touchscreen and complete one or more 360-degree turns (in an area free from large metal or metallic objects). A message will appear on the touchscreen when the compass has been successfully calibrated.
Keep magnetic materials away from the rear view mirror, such as Mobile Phones, Laptops and Radar Detectors. This is where the compass module is located, and it can cause interference with the compass sensor, and it may give false readings.

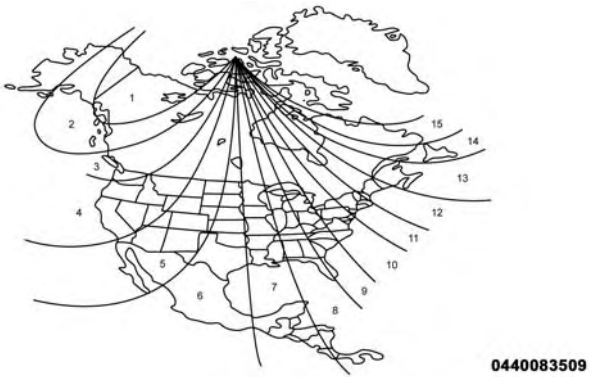

Compass Variance Zone Map

Audio

After pressing the "Audio" button on the touchscreen, the following settings will be available:

Setting Name	Adjustable Options				
Equalizer	Bass		Mid		Treble
NOTE: When in the "Equalizer" display, you may adjust the "Bass", "Mid" and "Treble" settings. Adjust the settings with the "+" and "–" setting buttons on the touchscreen or by selecting any point on the scale between the "+" and "–" buttons on the touchscreen. Bass/Mid/Treble also allow you to simply slide your finger up or down to change the setting as well as press directly on the desired setting.					
Balance/Fade	Up Arrow Button	Down Arrow Button	Left Arrow Button	Right Arrow Button	Center "C" Button
NOTE: When in the "Balance/Fade" display, you may adjust the "Balance/Fade" of the audio by using the "Arrow" button on the touchscreen to adjust the sound level from the front and rear or right and left side speakers. Press the "Center 'C' Button" on the touchscreen to reset the balance and fade to the factory setting.					
Speed Adjusted Volume	Off	1		2	3
Surround Sound — If Equipped	On		Off		
Loudness — If Equipped	Yes		No		
NOTE: The "Loudness" feature improves sound quality at lower volumes when enabled.					

Setting Name	Adjustable Options	
AUX Volume Offset — If Equipped	On	Off
NOTE: The "AUX Volume Offset" feature provides the ability to tune the audio level for portable devices connected through the AUX input.		

Phone/Bluetooth

After pressing the "Phone/Bluetooth" button on the touch-screen, the following settings will be available:

Setting Name	Selectable Options
Paired Phones	List Of Paired Phones
NOTE: The "Paired Phones" feature shows which phones are paired to the Phone/Bluetooth system. For further information, refer to the Uconnect Owner's Manual Supplement.	
Paired Audio Sources	List Of Paired Audio Sources
NOTE: The "Paired Audio Sources" feature shows which Audio Sources are paired to the Phone/Bluetooth system. For further information, refer to the Uconnect Owner's Manual Supplement.	

SiriusXM Setup — If Equipped

After pressing the "SiriusXM Setup" button on the touch-screen, the following settings will be available:

Setting Name	Selectable Options
Channel Skip	List of Channels
NOTE: SiriusXM can be programmed to designate a group of channels that are the most desirable to listen to or to exclude undesirable channels while scanning. This feature allows you to select the channels you would like to skip.	
Subscription Info	Sirius ID
NOTE: New vehicle purchasers or lessees will receive a free limited time subscription to SiriusXM Satellite Radio with your radio. Following the expiration of the free services, it will be necessary to access the information on the Subscription Information screen to re-subscribe. 1. Press the "Subscription Info" button on the touchscreen to access the Subscription Information screen. 2. Write down the Sirius ID numbers for your receiver. To reactivate your service, either call the number listed on the screen or visit the provider online. SiriusXM Travel Link is a separate subscription and is available for U.S. residents only.	

Restore Settings

After pressing the "Restore Settings" button on the touch-screen, the following settings will be available:

Setting Name	Selectable Options	
Restore Settings	OK	Cancel
NOTE: When the "Restore Settings" feature is selected it will reset all settings to their default settings.		

Clear Personal Data

After pressing the "Clear Personal Data Settings" button on the touchscreen, the following settings will be available:

Setting Name	Selectable Options	
Clear Personal Data	OK	Cancel
NOTE: When the "Clear Personal Data" feature is selected, it will remove all personal data including Bluetooth devices and presets.		

Customer Programmable Features/Personal Settings — Uconnect 8.4 Personal Settings

Press the "Apps" or the "Controls" button on the touchscreen, then press the "Settings" button on the touchscreen to display the menu setting screen. In this mode, the Uconnect system allows you to access programmable features that may be equipped such as Display, Voice, Clock, Safety & Driving Assistance, Lights, Doors & Locks, Auto-On Comfort, Engine Off Options, Audio, Phone/Bluetooth, SiriusXM Setup, Restore Settings, Clear Personal Data, and System Information.

NOTE: Only one category may be selected at a time.

To adjust the setting of a programmable feature, press the desired setting option. Once in the desired setting option, press and release the preferred setting until a check-mark appears next to the setting, showing that the setting has been selected.

Once the setting is complete, press the Back Arrow button on the touchscreen to return to the previous menu or press the X button on the touchscreen to close out of the settings screen. Pressing the Up or Down Arrow button on the right side of the screen will allow you to toggle up or down through the list of available settings.

Display

After pressing the “Display” button on the touchscreen, the following settings will be available:

Setting Name	Selectable Options		
Display Mode	Day	Night	Auto
Display Brightness With Headlights ON	+		-
NOTE: To make changes to the ″Display Brightness with Headlights ON″ setting, the headlights must be on and the interior dimmer switch must not be in the ″party″ or ″parade″ positions.			
Display Brightness With Headlights OFF	+		-
NOTE: To make changes to the ″Display Brightness with Headlights OFF″ setting, the headlights must be off and the interior dimmer switch must not be in the ″party″ or ″parade″ positions.			
Set Theme	☐		☑
NOTE: When the “Set Theme” feature is selected, you may select the theme for the display screen. To make your selection, press the ″Set Theme″ button on the touchscreen, then select the desired theme option button until a check-mark appears showing that the setting has been selected.			

Setting Name	Selectable Options	
Set Language	☐	☑
NOTE: When the “Set Language” feature is selected, you may select one of multiple languages (English / Français / Español) for all display nomenclature, including the trip functions and the navigation system (if equipped). Press the “Set Language” button on the touchscreen, then press the desired language button on the touchscreen until a check-mark appears next to the language, showing that setting has been selected.		
Touchscreen Beep	☐	☑
Control Screen Time-Out — If Equipped	☐	☑
NOTE: When the “Control Screen Time-Out” feature is selected, the Controls Screen will stay open for five seconds before the screen times out. With the feature deselected, the screen will stay open until it is manually closed.		
Navigation Turn-By-Turn In Cluster — If Equipped	☐	☑
NOTE: When the “Navigation Turn-By-Turn In Cluster” feature is selected, the turn-by-turn directions will appear in the instrument cluster display as the vehicle approaches a designated turn within a programmed route.		

Voice

After pressing the "Voice" button on the touchscreen, the following settings will be available:

Setting Name	Selectable Options		
Voice Response Length	Brief	Detailed	
Show Command List	Always	With Help	Never

Clock

After pressing the "Clock" button on the touchscreen, the following settings will be available:

Setting Name	Selectable Options	
Sync Time With GPS	☐	☑
Set Time Hours	+	-
NOTE: The "Set Time Hours" feature will allow you to adjust the hours. The "Sync time with GPS" button on the touch-screen must be unchecked.		
Set Time Minutes	+	-
NOTE: The "Set Time Minutes" feature will allow you to adjust the minutes. The "Sync time with GPS" button on the touch-screen must be unchecked.		

Setting Name	Selectable Options	
Time Format	12hrs	24hrs
Show Time in Status Bar — If Equipped	☐	☑

Safety/Assistance

After pressing the "Safety/Assistance" button on the touchscreen, the following settings will be available:

Setting Name	Selectable Options	
Forward Collision Warning (FCW) — If Equipped	Near	Far

NOTE:
The Front Collision Warning (FCW) feature can be set to one of two options: Far, or Near. The default status of FCW is the Far setting. This means the system will warn you of a possible collision with the vehicle in front of you when you are farther away. This gives you the most reaction time. To change the setting for a more dynamic driving experience, select the Near setting. This warns you of a possible collision when you are much closer to the vehicle in front of you.

Setting Name	Selectable Options		
Forward Collision Warning (FCW) Active Braking — If Equipped	On	Off	
NOTE: The FCW system includes Advanced Brake Assist (ABA). When this feature is selected, it will apply the brakes to slow your vehicle in case of potential forward collision. The ABA applies additional brake pressure when the driver requests insufficient brake pressure to avoid a potential frontal collision. The ABA system becomes active at 5 mph (8 km/h).			
LaneSense Warning — If Equipped	Early	Medium	Late
NOTE: When the “LaneSense Warning” feature is selected, it sets the distance at which the steering wheel will provide feedback for potential lane departures. The LDW sensitivity can be set to provide either an “early,” “medium,” or “late” warning zone start point.			
LaneSense Strength — If Equipped	Low	Medium	High
NOTE: When the “LaneSense Strength” feature is selected, it sets the strength of the steering wheel feedback for potential lane departures.			
ParkSense — If Equipped	Sound Only	Sound and Display	

Setting Name	Selectable Options		
NOTE: The Rear Park Assist system will scan for objects behind the vehicle when the gear selector is in REVERSE and the vehicle speed is less than 11 mph (18 km/h).			
Front ParkSense Volume — If Equipped	Low	Medium	High
Rear ParkSense Volume — If Equipped	Low	Medium	High
Rear ParkSense Braking Assist — If Equipped	☐	☑	
NOTE: When the "Rear ParkSense Braking Assist" feature is selected, the park assist system will detect objects located behind the vehicle and utilize autonomous braking to stop the vehicle.			
Tilt Mirrors In Reverse — If Equipped	On	Off	
NOTE: When the "Tilt Mirrors In Reverse" feature is selected, the exterior sideview mirrors will tilt downward when the ignition is in the RUN position and the gear selector is in the REVERSE position. The mirrors will move back to their previous position when the transmission is shifted out of REVERSE.			

Setting Name	Selectable Options		
Blind Spot Alert — If Equipped	Off	Lights	Lights and Chime
NOTE: When the "Blind Spot Alert" feature is selected, the Blind Spot Monitor (BSM) system is activated and will show a visual alert in the outside mirrors, or it will show a visual alert in the outside mirrors as well as play an audible alert when the turn signal is on. When "Off" is selected, the Blind Spot Monitor (BSM) system is deactivated. If your vehicle has experienced any damage in the area where the sensor is located, even if the fascia is not damaged, the sensor may have become misaligned. Take your vehicle to an authorized dealer to verify sensor alignment. A sensor that is misaligned will result in the BSM not operating to specification.			
ParkView Backup Camera Active Guide Lines — If Equipped	☐	☑	
ParkView Backup Camera Fixed Guide Lines — If Equipped	☐	☑	
ParkView Backup Camera Delay	Enable	Disable	
NOTE: When the "ParkView Backup Camera Delay" feature is enabled, it will allow the ParkView Backup Camera display to remain on while in drive for up to ten seconds, or 8 mph (13 km/h).			

Setting Name	Selectable Options	
Rain Sensing Auto Wipers	☐	☑
Electric Park Brake Service Mode	☐	☑

NOTE:
The "Electric Park Brake Service Mode" feature provides a means for a technician or vehicle owner to utilize a vehicle integrated, menu driven system, to command the electric park brake retraction, to service the rear foundation brakes (brake pads, calipers, rotors, etc.).

Lights

After pressing the "Lights" button on the touchscreen, the following settings will be available.

Setting Name	Selectable Options			
Headlight Off Delay	0 sec	30 sec	60 sec	90 sec

NOTE:
When the "Headlight Off Delay" feature is selected, it allows the adjustment of the amount of time the headlights remain on after the engine is shut off.

Setting Name	Selectable Options			
Headlights With Wipers — If Equipped	☐		☑	
Headlight Illuminated On Approach	0 sec	30 sec	60 sec	90 sec
NOTE: When the "Headlight Illumination On Approach" feature is selected, it allows the adjustment of the amount of time the headlights remain on after the doors are unlocked with the key fob.				
Auto Dim High Beams— If Equipped	On		Off	
NOTE: When the "Auto Dim High Beams" feature is selected, the high beam headlights will activate/deactivate automatically under certain conditions.				
Daytime Running Lights — If Equipped	Yes		No	
Flash Lights With Lock	On		Off	

Doors & Locks

After pressing the "Doors & Locks" button on the touch-screen, the following settings will be available:

Setting Name	Selectable Options		
Auto Door Locks	On	Off	
NOTE: When the "Auto Door Locks" feature is selected, all doors will lock automatically when the vehicle reaches a speed of 12 mph (20 km/h).			
Auto Unlock On Exit	☐	☑	
NOTE: When this feature is selected, all doors will unlock when the vehicle is stopped, the transmission is in the PARK or NEUTRAL position and the driver's door is opened.			
Flash Lights With Lock	☐	☑	
Sound Horn With Lock	Off	1st Press	2nd Press
Sound Horn With Remote Start	☐	☑	
1st Press Of Key Fob Unlocks	Driver Door	All Doors	

Setting Name	Selectable Options	
NOTE: When "Driver Door" is selected with "1st Press Of Key Fob Unlocks", only the driver's door will unlock with the first press of the key fob unlock button. You must press the key fob unlock button twice to unlock the passenger's doors. When "All Doors" is selected for "1st Press Of Key Fob Unlocks", all doors will unlock on the first press of the key fob unlock button. If the vehicle is programmed "1st Press Of Key Fob Unlocks: All Doors," all doors will unlock no matter which Passive Entry equipped door handle is grasped. If "1st Press Of Key Fob Unlocks: Driver Door" is programmed, only the driver's door will unlock when the driver's door is grasped. With Passive Entry, if "1st Press Of Key Fob Unlocks: Driver Door" is programmed, touching the handle more than once will result in only the driver's door opening. If "Driver Door" is selected, once the driver door is opened, the interior door lock/unlock switch can be used to unlock all doors (or use the key fob).		
Passive Entry — If Equipped	☐	☑
NOTE: The "Passive Entry" feature allows you to lock and unlock the vehicles door(s) without having to push the key fob lock or unlock buttons.		
Personal Settings Linked To Key Fob — If Equipped	☐	☑
NOTE: The "Personal Settings Linked To Key Fob" feature provides automatic recall of all settings stored to a memory location (driver's seat, exterior mirrors, steering column position and radio station pre-sets) to enhance driver mobility when entering and exiting the vehicle.		

Setting Name	Selectable Options	
Power Lift Gate Chime — If Equipped	☐	☑

Auto-On Comfort — If Equipped

After pressing the "Auto-On Comfort" button on the touchscreen, the following settings will be available:

Setting Name	Selectable Options		
Auto-On Driver Heated/ Ventilated Seat & Steering Wheel With Vehicle Start — If Equipped	Off	Remote Start	All Starts

NOTE:
When the "Auto-On Driver Heated/Ventilated Seat & Steering Wheel With Vehicle Start" feature is selected, the driver's heated seat and heated steering wheel will automatically turn on when temperatures are below 40° F (4.4° C). When temperatures are above 80° F (26.7° C), the driver vented seat will turn on.

Engine Off Options

After pressing the "Engine Off Options" button on the touchscreen, the following settings will be available:

Setting Name	Selectable Options			
Easy Exit Seat — If Equipped	☐		☑	
NOTE: When the "Easy Exit Seat" feature is selected, it provides automatic driver seat positioning to enhance driver mobility when entering and exiting the vehicle.				
Engine Off Power Delay — If Equipped	0 sec	45 sec	5 minutes	10 minutes
NOTE: When the "Engine Off Power Delay" feature is selected, the power window switches, radio, Uconnect phone system (if equipped), DVD video system (if equipped), power sunroof (if equipped), and power outlets will remain active for up to ten minutes after the ignition is cycled to OFF. Opening either front door will cancel this feature.				
Headlight Off Delay	+		-	
NOTE: When the "Headlight Off Delay" feature is selected, it allows the adjustment of the amount of time the headlights remain on after the engine is shut off.				

Audio

After pressing the "Audio" button on the touchscreen, the following settings will be available:

Setting Name	Selectable Options		
Balance/Fade	Speaker Icon		
NOTE: When in the "Balance/Fade" display, you may adjust the "Balance/Fade" of the audio by pressing and dragging the "Speaker Icon" toward any location in the box.			
Equalizer	Bass	Mid	Treble
NOTE: When in the "Equalizer" display, you may adjust the "Bass", "Mid" and "Treble" settings. Adjust the settings with the "+" and "–" setting buttons on the touchscreen or by selecting any point on the scale between the "+" and "–" buttons on the touchscreen. Bass/Mid/Treble also allow you to simply slide your finger up or down to change the setting as well as press directly on the desired setting.			

Setting Name	Selectable Options			
Speed Adjusted Volume	Off	1	2	3
Surround Sound — If Equipped	On		Off	
AUX Volume Offset — If Equipped	+		-	
NOTE: The "AUX Volume Offset" feature provides the ability to tune the audio level for portable devices connected through the AUX input.				

Phone/Bluetooth

After pressing the "Phone/Bluetooth" button on the touch-screen, the following settings will be available:

Setting Name	Selectable Options
Paired Phones	List Of Paired Phones
NOTE: The "Paired Phones" feature shows which phones are paired to the Phone/Bluetooth system. For further information, refer to the Uconnect Owner's Manual Supplement.	
Paired Audio Sources	List Of Paired Audio Sources
NOTE: The "Paired Audio Sources" feature shows which Audio Sources are paired to the Phone/Bluetooth system. For further information, refer to the Uconnect Owner's Manual Supplement.	

SiriusXM Setup — If Equipped

After pressing the "SiriusXM Setup" button on the touch-screen, the following settings will be available:

Setting Name	Selectable Options	
Tune Start	On	Off
NOTE: The "Tune Start" feature begins playing the current song from the beginning when you tune to a music channel using one of the twelve presets, so you can enjoy the complete song. This feature occurs the first time the preset is selected during that current song. Tune Start works in the background, so you will not even realize it's on, except that you will miss the experience of joining your favorite song with only a few seconds left to play.		
Channel Skip	List of Channels	
NOTE: SiriusXM can be programmed to designate a group of channels that are the most desirable to listen to or to exclude undesirable channels while scanning. This feature allows you to select the channels you would like to skip.		

Setting Name	Selectable Options
Subscription Info	Sirius ID

NOTE:
New vehicle purchasers or lessees will receive a free limited time subscription to SiriusXM Satellite Radio with your radio. Following the expiration of the free services, it will be necessary to access the information on the Subscription Information screen to re-subscribe.

1. Press the "Subscription Info" button on the touchscreen to access the Subscription Information screen.
2. Write down the Sirius ID numbers for your receiver. To reactivate your service, either call the number listed on the screen or visit the provider online.

SiriusXM Travel Link is a separate subscription and is available for U.S. residents only.

Restore Settings

After pressing the "Restore Settings" button on the touch-screen, the following settings will be available:

Setting Name	Selectable Options	
Restore Settings	OK	Cancel

NOTE:
When the "Restore Settings" feature is selected it will reset all settings to their default settings.

Clear Personal Data

After pressing the "Clear Personal Data" button on the touchscreen, the following settings will be available:

Setting Name	Selectable Options	
Clear Personal Data	OK	Cancel
NOTE: When the "Clear Personal Data" feature is selected, it will remove all personal data including Bluetooth devices and presets.		

System Information

After pressing the "System Information" button on the touchscreen, the following settings will be available:

Setting Name	Selectable Options
System Information	Displays system information screen with software version.

STEERING WHEEL AUDIO CONTROLS — IF EQUIPPED

The remote sound system controls are located on the rear surface of the steering wheel. Reach behind the wheel to access the switches.

Remote Sound System Controls (Back View Of Steering Wheel)

The right-hand control is a rocker-type switch with a pushbutton in the center and controls the volume and mode of the sound system. Pushing the top of the rocker switch will increase the volume, and pushing the bottom of the rocker switch will decrease the volume.

Pushing the center button will make the radio switch between the various modes available (AM/FM/SXM/CD/AUX, etc.).

The left-hand control is a rocker-type switch with a pushbutton in the center. The function of the left-hand control is different depending on which mode you are in.

The following describes the left-hand control operation in each mode.

Radio Operation

Pushing the top of the switch will “Seek” up for the next listenable station and pushing the bottom of the switch will “Seek” down for the next listenable station.

The button located in the center of the left-hand control will tune to the next preset station that you have programmed in the radio preset button.

CD Player

Pushing the top of the switch once will go to the next track on the CD. Pushing the bottom of the switch once will go to the beginning of the current track, or to the beginning of the previous track if it is within eight seconds after the current track begins to play.

If you push the switch up or down twice, it plays the second track; three times, and it will play the third, etc.

The center button on the left side rocker switch has no function for a single-disc CD player. However, when a multiple-disc CD player is equipped on the vehicle, the center button will select the next available CD in the player.

MEDIA HUB — IF EQUIPPED

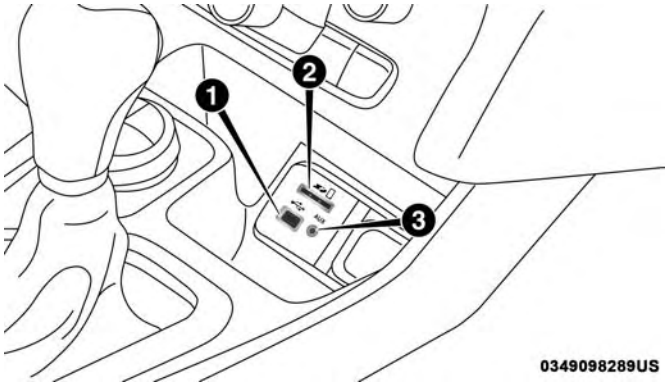

Media Hub

1 — USB Port
2 — SD Card Slot
3 — AUX Jack

Located in the front storage area, this feature allows an External USB device, SD card or AUX electronic device to be plugged into the port, slot or jack.

For further information, refer to the Uconnect Owner's Manual Supplement.

RADIO OPERATION AND MOBILE PHONES

Under certain conditions, the mobile phone being on in your vehicle can cause erratic or noisy performance from your radio. This condition may be lessened or eliminated by relocating the mobile phone antenna. This condition is not harmful to the radio. If your radio performance does not satisfactorily "clear" by the repositioning of the antenna, it is recommended that the radio volume be turned down or off during mobile phone operation when not using Uconnect (if equipped).

Regulatory And Safety Information

USA/CANADA

Exposure to Radio Frequency Radiation

The radiated output power of the internal wireless radio is far below the FCC and IC radio frequency exposure limits. Nevertheless, the wireless radio will be used in such a manner that the radio is 20 cm or further from the human body.

The internal wireless radio operates within guidelines found in radio frequency safety standards and recommendations, which reflect the consensus of the scientific community.

The radio manufacturer believes the internal wireless radio is safe for use by consumers. The level of energy emitted is far less than the electromagnetic energy emitted by wireless devices such as mobile phones. However, the use of wireless radios may be restricted in some situations or environments, such as aboard airplanes. If you are unsure of restrictions, you are encouraged to ask for authorization before turning on the wireless radio.

The following regulatory statement applies to all Radio Frequency (RF) devices equipped in this vehicle:

This device complies with Part 15 of the FCC Rules and with Industry Canada license-exempt RSS standard(s). Operation is subject to the following two conditions:

1. This device may not cause harmful interference, and
2. This device must accept any interference received, including interference that may cause undesired operation.

NOTE: Changes or modifications not expressly approved by the party responsible for compliance could void the user's authority to operate the equipment.

NOTE:

- This equipment has been tested and found to comply with the limits for a Class B digital device, pursuant to Part 15 of the FCC Rules. These limits are designed to provide reasonable protection against harmful interference in a residential installation. This equipment generates, uses and can radiate radio frequency energy and, if not installed and used in accordance with the instructions, may cause harmful interference to radio communications. However, there is no guarantee that interference will not occur in a particular installation.
- If this equipment does cause harmful interference to radio or television reception, which can be determined by turning the equipment off and on, the user is encouraged to try to correct the interference by one or more of the following measures:
  1. Increase the separation between the equipment and receiver.
  2. Consult the dealer or an experienced radio technician for help.

UCONNECT VOICE RECOGNITION QUICK TIPS

Introducing Uconnect

Start using Uconnect Voice Recognition with these helpful quick tips. It provides the key Voice Commands and tips you need to know to control your Uconnect 5.0 or 8.4/8.4 NAV system.

0346098565US

Uconnect 5.0

Uconnect 8.4 NAV

If you see the icon on your touchscreen, you have the Uconnect 8.4 NAV system. If not, you have a Uconnect 8.4 system.

Get Started

All you need to control your Uconnect system with your voice are the buttons on your steering wheel.

1. Visit UconnectPhone.com to check mobile device and feature compatibility and to find phone pairing instructions.
2. Reduce background noise. Wind and passenger conversations are examples of noise that may impact recognition.
3. Speak clearly at a normal pace and volume while facing straight ahead. The microphone is positioned on the rearview mirror and aimed at the driver.
4. Each time you give a Voice Command, you must first push either the Voice Recognition (VR) or Phone button, wait until **after** the beep, then say your Voice Command.

5. You can interrupt the help message or system prompts by pushing the VR or Phone button and saying a Voice Command from current category.

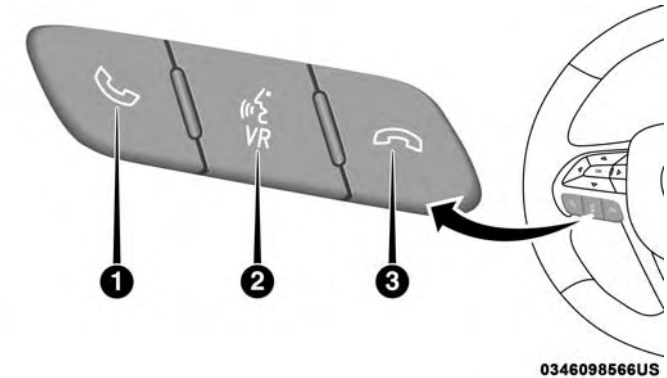

Uconnect Voice Command Buttons

1 — Push To Initiate Or To Answer A Phone Call, Send Or Receive A Text
2 — For All Radios: Push To Begin Radio Or Media Functions. For 8.4/8.4 NAV Only: Push To Begin Navigation, Apps And Climate Functions.
3 — Push To End Call

Basic Voice Commands

The basic Voice Commands below can be given at any point while using your Uconnect system.

Push the VR button . After the beep, say...

- **Cancel** to stop a current voice session
- **Help** to hear a list of suggested Voice Commands
- **Repeat** to listen to the system prompts again

Notice the visual cues that inform you of your voice recognition system's status. Cues appear on the touch-screen.

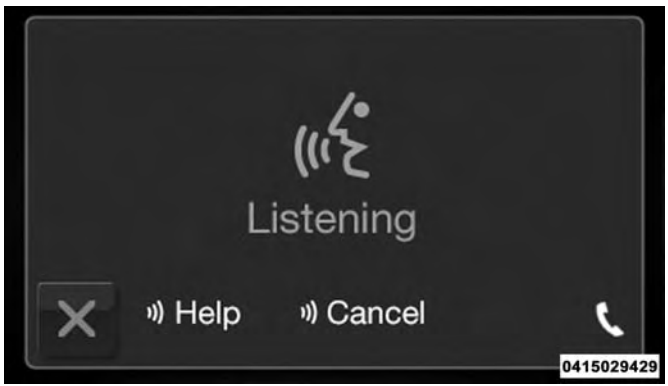

Uconnect 5.0

Uconnect 8.4 /8.4 NAV

Radio

Use your voice to quickly get to the AM, FM or SiriusXM Satellite Radio stations you would like to hear. (Subscription or included SiriusXM Satellite Radio trial required.)

Push the VR button . After the beep, say...

- **Tune to** ninety-five-point-five FM
- **Tune to** Satellite Channel Hits 1

TIP: At any time, if you are not sure of what to say or want to learn a Voice Command, push the VR button and say **"Help."** The system will provide you with a list of commands.

Uconnect 5.0 Radio

Uconnect 8.4/8.4 NAV Radio

Media

Uconnect offers connections via USB, SD, Bluetooth and auxiliary ports (if equipped). Voice operation is only available for connected USB and AUX devices. (Remote CD player optional and not available on all vehicles.)

Push the VR button . After the beep, say one of the following commands and follow the prompts to switch your media source or choose an artist.

- **Change source** to Bluetooth
- **Change source** to AUX
- **Change source** to USB
- **Play artist** Beethoven; **Play album** Greatest Hits; **Play song** Moonlight Sonata; **Play genre** Classical

TIP: Press the Browse button on the touchscreen to see all of the music on your AUX or USB device. Your Voice Command must match **exactly** how the artist, album, song and genre information is displayed.

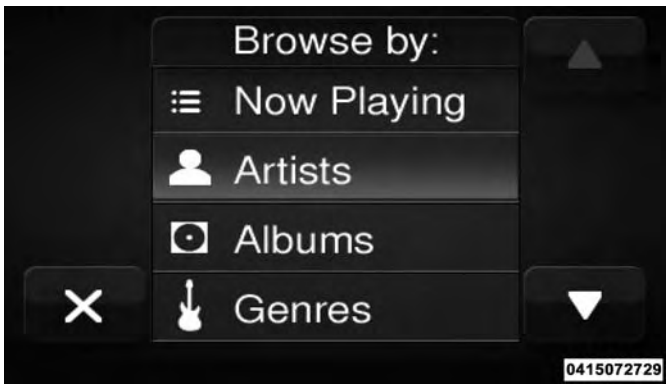

Uconnect 5.0 Media

Uconnect 8.4/8.4 NAV Media

Phone

Making and answering hands-free phone calls is easy with Uconnect. When the Phonebook button is illuminated on your touchscreen, your system is ready. Check UconnectPhone.com for mobile phone compatibility and pairing instructions.

Push the Phone button . After the beep, say one of the following commands...

- **Call** John Smith
- **Dial** 123-456-7890 and follow the system prompts
- **Redial** (call previous outgoing phone number)
- **Call back** (call previous incoming phone number)

TIP: When providing a Voice Command, push the Phone button and say **"Call,"** then pronounce the name **exactly** as it appears in your phone book. When a contact has multiple phone numbers, you can say **"Call** John Smith **work."**

Uconnect 5.0 Phone

Uconnect 8.4/8.4 NAV Phone

Voice Text Reply

Uconnect will announce **incoming** text messages. Push the Phone button and say **Listen.** (Must have compatible mobile phone paired to Uconnect system.)

1. Once an incoming text message is read to you, push the Phone button . After the beep, say: **"Reply."**

2. Listen to the Uconnect prompts. After the beep, repeat one of the pre-defined messages and follow the system prompts.

PRE-DEFINED VOICE TEXT REPLY RESPONSES		
Yes.	Stuck in traffic.	See you later.
No.	Start without me.	I'll be late.
Okay.	Where are you?	I will be <number> minutes late.
Call me.	Are you there yet?	
I'll call you later.	I need directions.	See you in <number> of minutes.
I'm on my way.	Can't talk right now.	
I'm lost.		Thanks.

TIP: Your mobile phone must have the full implementation of the **Message Access Profile (MAP)** to take advantage of this feature. For details about MAP, visit UconnectPhone.com.

Apple iPhone iOS 6 or later supports reading **incoming** text messages only. To enable this feature on your Apple iPhone, follow these four simple steps:

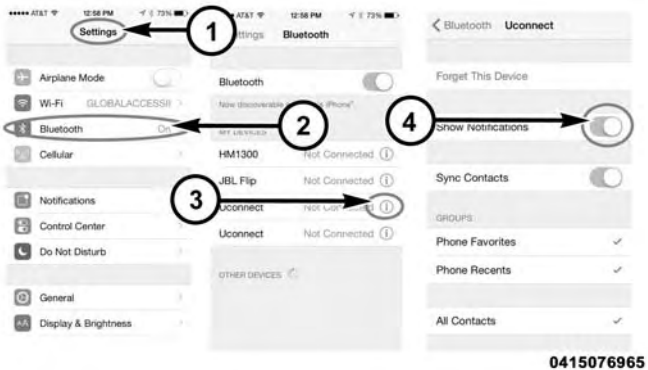

iPhone Notification Settings

1 — Select "Settings"
2 — Select "Bluetooth"
3 — Select The (i) For The Paired Vehicle
4 — Turn On "Show Notifications"

TIP: Voice Text Reply is not compatible with iPhone, but if your vehicle is equipped with Siri Eyes Free, you can use your voice to send a text message.

Climate (8.4/8.4 NAV)

Too hot? Too cold? Adjust vehicle temperatures hands-free and keep everyone comfortable while you keep moving ahead. (If vehicle is equipped with climate control.)

Push the VR button . After the beep, say one of the following commands:

- **Set driver temperature to** 70 **degrees**
- **Set passenger temperature to** 70 **degrees**

TIP: Voice Command for Climate may only be used to adjust the interior temperature of your vehicle. Voice Command will not work to adjust the heated seats or steering wheel if equipped.

Uconnect 8.4/8.4 NAV Climate

Navigation (8.4 /8.4 NAV)

The Uconnect navigation feature helps you save time and become more productive when you know exactly how to get to where you want to go. (Navigation is optional on the Uconnect 8.4 system. See your dealer to activate navigation at any time.)

1. To enter a destination, push the VR button . After the beep, say:

- For the 8.4 Uconnect System, say: **"Enter state."**
- For the 8.4 NAV Uconnect System, say: **"Find address** 800 Chrysler Drive Auburn Hills, Michigan."

2. Then follow the system prompts.

TIP: To start a POI search, push the VR button . After the beep, say: " **Find nearest** coffee shop."

Uconnect 8.4 NAV Navigation

Uconnect Access (8.4/8.4 NAV)

WARNING!

ALWAYS obey traffic laws and pay attention to the road. Some Uconnect Access services, including 9-1-1 and Assist, will NOT work without an operable 1X(voice/data) or 3G(data) network connection.

NOTE: Your vehicle may be transmitting data as authorized by the subscriber.

An included trial and/or subscription is required to take advantage of the Uconnect Access services in the next section of this guide. To register with Uconnect Access, press the Apps button on the 8.4-inch touchscreen to get started. Detailed registration instructions can be found on the next page.

NOTE: Uconnect Access is available only on equipped vehicles purchased within the continental United States, Alaska and Hawaii. Services can only be used where coverage is available; see coverage map for details.

9-1-1 Call

Security Alarm Notification

Remote Door Lock/Unlock

Stolen Vehicle Assistance

Remote Vehicle Start**

Remote Horn and Lights

Yelp Search

Voice Texting

Roadside Assistance Call

3G Wi-Fi Hotspot***

**If vehicle is equipped.

***Extra charges apply.

Register (8.4/8.4 NAV)

To unlock the full potential of Uconnect Access in your vehicle, you first need to register with Uconnect Access.

1. Push the ASSIST button on your rearview mirror.

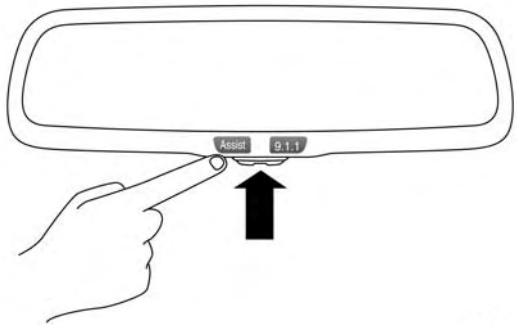

0346098564US

Assist Button

2. Press the "Uconnect Care" button on the touchscreen.
3. A helpful Uconnect Care Agent will register your vehicle and handle all of the details.

Signing up is easy! Simply follow the steps above. Or, press the "Apps " button on the touchscreen to "Register By Web" to complete the process using your smartphone or computer.

For further information, please visit DriveUconnect.com.

Vehicle Health Alert

Your vehicle will send you an email alert if it senses a problem under the hood with one of your vehicles key systems. For further information go to the Mopar Owner Connect website at moparownerconnect.com.

Mobile App (8.4/8.4 NAV)

You're only a few steps away from using remote commands and sending a destination from your phone to your vehicle.

1001087754US

Mobile App

To use the Uconnect Access Mobile App:

- Once you have registered your Uconnect Access services, download the Uconnect Access app to your mobile device. Use your Owner Account login and password to open the app.
- Once on the "Remote" screen, you can begin using Remote Door Lock/Unlock, Remote Vehicle Start, and activate your horn and lights remotely, if equipped.
- Press the "Location" button on the bottom menu bar of the app to bring up a map to locate your vehicle or send a location to your Uconnect Navigation using Vehicle Finder and Send 'n Go , if equipped.
- Press the "Settings" side menu in the upper left corner of the app to bring up app settings.

Voice Texting (8.4/8.4 NAV)

1. To send a message, push the Phone button . After the beep, say the following command: **"Send message** to John Smith."
2. Listen to the prompt. After the beep, dictate the message you would like to send. Wait for Uconnect to process your message.

3. The Uconnect system will repeat your message and provide a variety of options to add to, delete, send or hear the message again. After the beep, tell Uconnect what you'd like to do. For instance, if you're happy with your message, after the beep, say: **"Send."**

You must be registered with Uconnect Access and have a compatible MAP – enabled smartphone to use your voice to send a personalized text message. For details about MAP, visit UconnectPhone.com.

Apple iPhone iOS6 or later supports reading **incoming** text messages only. To enable this feature on your Apple iPhone, follow these four simple steps:

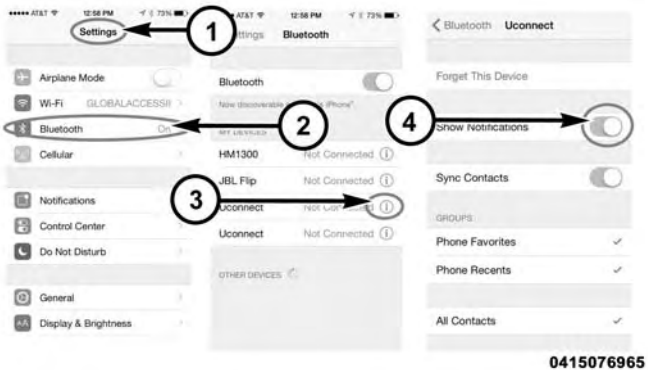

iPhone Notification Settings

1 — Select "Settings"
2 — Select "Bluetooth"
3 — Select The (i) For The Paired Vehicle
4 — Turn On "Show Notifications"

TIP:

- Voice Texting is not compatible with iPhone, but if your vehicle is equipped with Siri Eyes Free, you can use your voice to send a text message.
- Messages are limited to 140 characters.
- The Messaging button on the touchscreen must be illuminated to use the feature.

Yelp (8.4/8.4 NAV)

Once registered with Uconnect Access, you can use your voice to search for the most popular places or things around you.

1. Press the "Apps " button on the touchscreen.
2. Press the "Yelp" button on the touchscreen.
3. Once the YELP home screen appears on the touchscreen, push the VR button , then say: **"YELP search."**
4. Listen to the system prompts and after the beep, tell Uconnect the place or business that you'd like Uconnect to find.

TIP: Once you perform a search, you can reorganize the results by selecting either the Best Match, Rating or Distance tab on the top of the touchscreen display.

Yelp

SiriusXM Travel Link (8.4/8.4 NAV)

Need to find a gas station, view local movie listings, check a sports score or the 5 - day weather forecast? SiriusXM Travel Link is a suite of services that brings a wealth of information right to your Uconnect 8.4 NAV system. (Not available for 8.4 system or vehicles sold in the Canadian market.)

Push the VR button . After the beep, say one of the following commands:

- **Show fuel prices**
- **Show 5 - day weather forecast**
- **Show extended weather**

TIP: Traffic alerts are not accessible with Voice Command.

SiriusXM Travel Link

Siri Eyes Free — If Equipped

Siri lets you use your voice to send text messages, select media, place phone calls and much more. Siri uses your natural language to understand what you mean and will respond back to confirm your requests. The system is designed to keep your eyes on the road and your hands on the wheel by letting Siri help you perform useful tasks.

To enable Siri push and hold, then release the Uconnect Voice Recognition (VR) button on the steering wheel. After you hear a double beep you can ask Siri to play podcasts and music, get directions, read text messages and many other useful requests.

Siri Eyes Free Available

Getting Started

Ensure Siri is enabled on your iPhone.

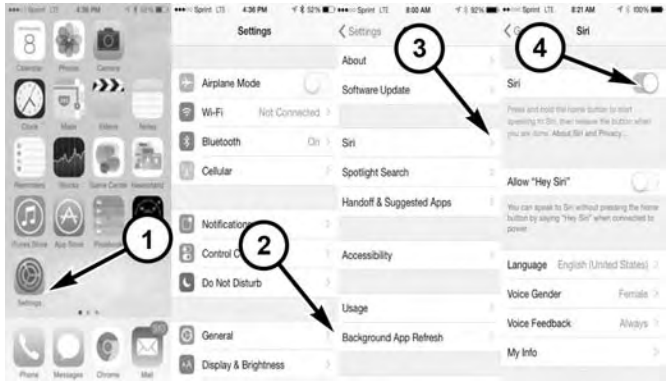

Siri Enable Screens

1 — Select Settings On Your iPhone
2 — Select General
3 — Select Siri
4 — Enable Siri

1. Pair your Siri enabled device to the vehicles sound system. Refer to your Uconnect Owner's Manual Supplement for a detailed pairing procedure.

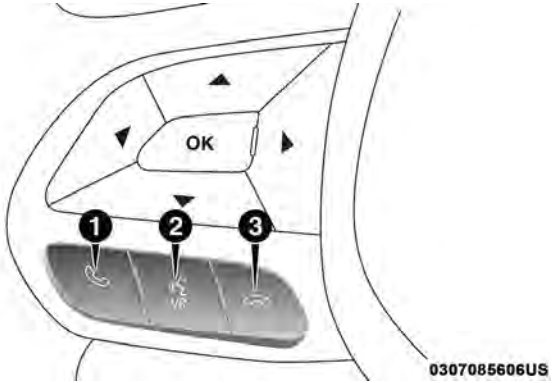

Voice Recognition/Siri Buttons

1 — Phone Pick Up Button
2 — Voice Recognition/Siri Eyes Free Button
3 — Phone Hang Up Button

NOTE: A **push and release** of the button will start normal embedded VR functions. The **push and hold, then release** of the button will start Siri functions.

2. After the double beep, begin speaking to Siri.

Examples of Siri commands and questions:

- "Play Rolling Stones"
- "Send text message to John"
- "Read text message from Sarah"
- "Take me to the nearest coffee shop"

NOTE:

- Speak clearly at a normal pace and volume while facing straight ahead to ensure your command is understood.
- Siri is available on iPhone 4S and later.

Siri Eyes Free

Do Not Disturb

With Do Not Disturb, you can disable notifications from incoming calls and texts, allowing you to keep your eyes on the road and hands on the wheel. For your convenience, there is a counter display to keep track of your missed calls and text messages while you were using Do Not Disturb.

Do Not Disturb can automatically reply with a text message, a call or both, when declining an incoming call and send it to voicemail.

Automatic reply messages can be:

- "I am driving right now, I will get back to you shortly."
- Create a custom auto reply message up to 160 characters.

NOTE: Only the first 25 characters can be seen on the touchscreen while typing a custom message.

While in Do Not Disturb, Conference Call can be selected so you can still place a second call without being interrupted by incoming calls.

NOTE:

- Reply with text message is not compatible with iPhones.
- Auto reply with text message is only available on phones that support Bluetooth MAP.

General Information

The following regulatory statement applies to all Radio Frequency (RF) devices equipped in this vehicle:

This device complies with Part 15 of the FCC Rules and with Industry Canada license-exempt RSS standard(s). Operation is subject to the following two conditions:

1. This device may not cause harmful interference, and
2. This device must accept any interference received, including interference that may cause undesired operation.

NOTE: Changes or modifications not expressly approved by the party responsible for compliance could void the user's authority to operate the equipment.

Additional Information

© 2017 FCA US LLC. All rights reserved. Mopar and Uconnect are registered trademarks and Mopar Owner Connect is a trademark of FCA US LLC. Android is a trademark of Google Inc. SiriusXM and all related marks and logos are trademarks of SiriusXM Radio Inc. Yelp, Yelp logo, Yelp burst and related marks are registered trademarks of Yelp.

For Uconnect system support, call: 1-877-855-8400 (24 hours a day 7 days a week) or visit DriveUconnect.com.

Uconnect Access services support, call: 1-855-792-4241 Please have your Uconnect Security PIN ready when you call.

CD/DVD DISC MAINTENANCE

To keep a CD/DVD in good condition, take the following precautions:

1. Handle the disc by its edge; avoid touching the surface.
2. If the disc is stained, clean the surface with a soft cloth, wiping from center to edge.
3. Do not apply paper or tape to the disc; avoid scratching the disc.
4. Do not use solvents such as benzene, thinner, cleaners, or anti-static sprays.
5. Store the disc in its case after playing.
6. Do not expose the disc to direct sunlight.
7. Do not store the disc where temperatures may become too high.

NOTE: If you experience difficulty in playing a particular disc, it may be damaged, (e.g., scratched, reflective coating removed, a hair, moisture or dew on the disc) oversized, or have protection encoding. Try a known good disc before considering disc player service.

CUSTOMER ASSISTANCE

CONTENTS

- SUGGESTIONS FOR OBTAINING SERVICE FOR YOUR VEHICLE 584
  - Prepare For The Appointment 584
  - Prepare A List 584
  - Be Reasonable With Requests 584
- IF YOU NEED ASSISTANCE 584
  - FCA US LLC Customer Center 585
  - FCA Canada Inc. Customer Center. 585
  - In Mexico Contact 585
  - Puerto Rico And U.S. Virgin Islands. 585
  - Customer Assistance For The Hearing Or Speech Impaired (TDD/TTY) 585
  - Service Contract 586
- WARRANTY INFORMATION 587
- MOPAR PARTS 587
- REPORTING SAFETY DEFECTS 587
  - In The 50 United States And Washington, D.C. . .587
  - In Canada 587
- PUBLICATION ORDER FORMS 587

SUGGESTIONS FOR OBTAINING SERVICE FOR YOUR VEHICLE

Prepare For The Appointment

If you are having warranty work done, be sure to have the right papers with you. Take your warranty folder. All work to be performed may not be covered by the warranty. Discuss additional charges with the service manager. Keep a maintenance log of your vehicle's service history. This can often provide a clue to the current problem.

Prepare A List

Make a written list of your vehicle's problems or the specific work you want done. If you've had an accident or work done that is not on your maintenance log, let the service advisor know.

Be Reasonable With Requests

If you list a number of items and you must have your vehicle by the end of the day, discuss the situation with the service advisor and list the items in order of priority. At many authorized dealers, you may obtain a rental vehicle at a minimal daily charge. If you need a rental, it is advisable to make these arrangements when you call for an appointment.

IF YOU NEED ASSISTANCE

The manufacturer and its authorized dealer are vitally interested in your satisfaction. We want you to be happy with our products and services.

Warranty service must be done by an authorized dealer. We strongly recommend that you take the vehicle to an authorized dealer. They know your vehicle the best, and are most concerned that you get prompt and high quality service. The manufacturer's authorized dealer have the facilities, factory-trained technicians, special tools, and the latest information to ensure the vehicle is fixed correctly and in a timely manner.

This is why you should always talk to an authorized dealer service manager first. Most matters can be resolved with this process.

- If for some reason you are still not satisfied, talk to the general manager or owner of the authorized dealer. They want to know if you need assistance.
- If an authorized dealer is unable to resolve the concern, you may contact the manufacturer's customer center.

Any communication to the manufacturer's customer center should include the following information:

- Owner's name and address
- Owner's telephone number (home and office)
- Authorized dealer name
- Vehicle Identification Number (VIN)
- Vehicle delivery date and mileage

FCA US LLC Customer Center

P.O. Box 21–8004

Auburn Hills, MI 48321–8004

Phone: (877) 426-5337

FCA Canada Inc. Customer Center

P.O. Box 1621

Windsor, Ontario N9A 4H6

Phone: (800) 465-2001 English / (800) 387-9983 French

In Mexico Contact

Av. Prolongacion Paseo de la Reforma, 1240

Sante Fe C.P. 05109

Mexico, D. F.

In Mexico City: 5081-7568

Outside Mexico City: 1-800-505-1300

Puerto Rico And U.S. Virgin Islands

Customer Service Chrysler International Services LLC

P.O. Box 191857

San Juan 00919-1857

Tel.: (787) 782-5757

Fax: (787) 782-3345

Customer Assistance For The Hearing Or Speech Impaired (TDD/TTY)

To assist customers who have hearing difficulties, the manufacturer has installed special TDD (Telecommunication Devices for the Deaf) equipment at its customer center. Any hearing or speech impaired customer, who has access to a TDD or a conventional teletypewriter (TTY) in the United States, can communicate with the manufacturer by dialing 1-800-380-CHRY.

Canadian residents with hearing difficulties that require assistance can use the special needs relay service offered by Bell Canada. For TTY teletypewriter users, dial 711 and for Voice callers, dial 1-800-855-0511 to connect with a Bell Relay Service operator.

Service Contract

You may have purchased a service contract for a vehicle to help protect you from the high cost of unexpected repairs after the manufacturer's New Vehicle Limited Warranty expires. The manufacturer stands behind only the manufacturer's service contracts. If you purchased a manufacturer's service contract, you will receive Plan Provisions and an Owner Identification Card in the mail within three weeks of the vehicle delivery date. If you have any questions about the service contract, call the manufacturer's Service Contract National Customer Hotline at 1-800-521-9922 (Canadian residents, call (800) 465-2001 English / (800) 387-9983 French).

The manufacturer will not stand behind any service contract that is not the manufacturer's service contract. It is not responsible for any service contract other than the manufacturer's service contract. If you purchased a service contract that is not a manufacturer's service contract, and you require service after the manufacturer's New Vehicle Limited Warranty expires, please refer to the contract documents, and contact the person listed in those documents.

We appreciate that you have made a major investment when you purchased the vehicle. An authorized dealer has also made a major investment in facilities, tools, and training to assure that you are absolutely delighted with the ownership experience. You will be pleased with their sincere efforts to resolve any warranty issues or related concerns.

WARNING!

Engine exhaust (internal combustion engines only), some of its constituents, and certain vehicle components contain, or emit, chemicals known to the State of California to cause cancer and birth defects, or other reproductive harm. In addition, certain fluids contained in vehicles and certain products of component wear contain, or emit, chemicals known to the State of California to cause cancer and birth defects, or other reproductive harm.

WARRANTY INFORMATION

See the Warranty Information Booklet for the terms and provisions of FCA US LLC warranties applicable to this vehicle and market.

MOPAR PARTS

Mopar fluids, lubricants, parts, and accessories are available from an authorized dealer. They are recommended for your vehicle in order to help keep the vehicle operating at its best.

REPORTING SAFETY DEFECTS

In The 50 United States And Washington, D.C.

If you believe that your vehicle has a defect that could cause a crash or cause injury or death, you should immediately inform the National Highway Traffic Safety Administration (NHTSA) in addition to notifying FCA US LLC.

If NHTSA receives similar complaints, it may open an investigation, and if it finds that a safety defect exists in a group of vehicles, it may order a recall and remedy campaign. However, NHTSA cannot become involved in individual problems between you, your authorized dealer or FCA US LLC.

To contact NHTSA, you may call the Vehicle Safety Hotline toll free at 1-888-327-4236 (TTY: 1-800-424-9153); or go to http://www.safercar.gov; or write to: Administrator, NHTSA, 1200 New Jersey Avenue, SE., West Building, Washington, D.C. 20590. You can also obtain other information about motor vehicle safety from http://www.safercar.gov.

In Canada

If you believe that your vehicle has a safety defect, you should contact the Customer Service Department immediately. Canadian customers who wish to report a safety defect to the Canadian government should contact Transport Canada, Motor Vehicle Defect Investigations and Recalls at 1-800-333-0510 or go to http://www.tc.gc.ca/roadsafety/.

PUBLICATION ORDER FORMS

To order the following manuals, you may use either the website or the phone numbers listed below. Visa, Mastercard, American Express, and Discover orders are accepted.

Service Manuals

These comprehensive Service Manuals provide the information that students and professional technicians need in diagnosing/troubleshooting, problem solving, maintaining, servicing, and repairing FCA US LLC vehicles. A complete working knowledge of the vehicle, system, and/or components is written in straightforward language with illustrations, diagrams, and charts.

Diagnostic Procedure Manuals

Diagnostic Procedure Manuals are filled with diagrams, charts and detailed illustrations. These practical manuals make it easy for students and technicians to find and fix problems on computer-controlled vehicle systems and features. They show exactly how to find and correct problems the first time, using step-by-step troubleshooting and drivability procedures, proven diagnostic tests and a complete list of all tools and equipment.

Owner's Manuals

These Owner's Manuals have been prepared with the assistance of service and engineering specialists to acquaint you with specific FCA US LLC vehicles. Included are starting, operating, emergency and maintenance procedures as well as specifications, capabilities and safety tips.

Call toll free at:

- **1-800-890-4038 (U.S.)**
- **1-800-387-1143 (Canada)**

Or

Visit us on the Worldwide Web at:

- www.techauthority.com

INDEX

About Your Brakes 505
Adaptive Cruise Control (ACC) (Cruise Control) 290
Adding Engine Coolant (Antifreeze) 465
Additives, Fuel 509
Air Bag 216
Air Bag Operation 218
Air Bag Warning Light 215, 219
Driver Knee Air Bag 226
Enhanced Accident Response 231, 436
Event Data Recorder (EDR) 436
Front Air Bag 216, 219
If A Deployment Occurs 230
Knee Impact Bolsters 226
Maintaining Your Air Bag System 232
Redundant Air Bag Warning Light 216
Transporting Pets 250
Air Bag Light. 139, 215, 252
Air Bag Maintenance 232
Air Cleaner, Engine (Engine Air Cleaner Filter). 449
Air Conditioner Maintenance 453
Air Conditioning Filter 91, 454
Air Conditioning, Operating Tips 91
Air Conditioning Refrigerant 453, 454
Air Conditioning System. 90, 453
Air Filter 449
Air Pressure, Tires 482
Alarm
Arm The System 33
Disarm The System 33
Alarm (Security Alarm). 32, 141
Alarm System (Security Alarm) 32
All Wheel Drive (AWD) 275
Alterations/Modifications, Vehicle 7
Antifreeze (Engine Coolant) 465, 512
Disposal 467
Anti-Lock Brake System (ABS) 170
Anti-Lock Warning Light 152
Arming System (Security Alarm) 32
Assist, Hill Start 172
Audio Systems (Radio). 519
Auto Down Power Windows 94
Automatic Door Locks. 40
Automatic Headlights 62
Automatic High Beams 65
Automatic Temperature Control (ATC) 90
Automatic Transaxle 267
Automatic Transmission 268, 471
Adding Fluid 471
Fluid And Filter Changes 471
Fluid Change 471

Fluid Level Check 470, 471
Fluid Type 470
Special Additives 470
Torque Converter 275
Auto Unlock, Doors 40
Auto Up Power Windows 94
Auxiliary Electrical Outlet (Power Outlet) 116
Auxiliary Power Outlet 116

Battery. 144, 446
Charging System Light 144
Keyless Key Fob Replacement 21
Belts, Seat 252
Blind Spot Monitoring 186
Body Mechanism Lubrication 457
B-Pillar Location 477
Brake Assist System. 172
Brake Control System, Electronic. 171
Brake Fluid 469
Brake System 468, 505
Anti-Lock (ABS) 505
Fluid Check 469
Master Cylinder 469
Parking 262
Warning Light 140
Brake/Transmission Interlock 268
Brightness, Interior Lights 67
Bulb Replacement 392
Bulbs, Light 254

Camera, Rear 359
Capacities, Fluid 512
Caps, Filler
Fuel 361, 428
Oil (Engine) 443, 444, 448
Radiator (Coolant Pressure) 466
Carbon Monoxide Warning 251, 510
Cargo Area Features 103
Cargo Compartment 103
Cargo Load Floor 103
Cargo Tie-Downs. 103
Car Washes. 498
Cellular Phone 562
Certification Label 362
Changing A Flat Tire 408, 471
Chart, Tire Sizing. 473
Check Engine Light (Malfunction Indicator Light). . . .167
Checking Your Vehicle For Safety 251
Checks, Safety 251
Child Restraint 233

Child Restraints
Booster Seats 237
Child Restraints 233
Child Seat Installation 247
How To Stow An Unused ALR Seat Belt 245
Infants And Child Restraints 235
LATCH Positions 239
Lower Anchors And Tethers For Children 239
Older Children And Child Restraints 236
Seating Positions 238
Child Safety Locks 40
Clean Air Gasoline 507
Cleaning
Wheels 490
Climate Control 75
Manual 75
Coin Holder 112
Cold Weather Operation. 260
Compact Disc (CD) Maintenance. 581
Compact Spare Tire 489
Console 112
Console, Floor 112
Contract, Service 586
Coolant Pressure Cap (Radiator Cap). 466
Cooling System 464
Adding Coolant (Antifreeze) 465
Coolant Capacity 512
Coolant Level 467
Disposal Of Used Coolant 467
Drain, Flush, And Refill 464
Inspection 464, 467
Points To Remember 468
Pressure Cap 466
Radiator Cap 466
Selection Of Coolant (Antifreeze) 465, 512
Corrosion Protection 497
Cruise Control (Speed Control) 290
Cruise Light 161, 162, 163, 165, 166
Cupholders 114
Customer Assistance 584

Daytime Brightness, Interior Lights. 68
Daytime Running Lights 63
Dealer Service 447
Defroster, Rear Window. 74
Defroster, Windshield. 252
Diagnostic System, Onboard 166
Dimmer Switch, Headlight. 65
Dipsticks
Oil (Engine) 445

Disabled Vehicle Towing 432
Disposal
Antifreeze (Engine Coolant) 467
Do Not Disturb 580
Door Ajar. 145, 146
Door Ajar Light 145, 146
Door Opener, Garage 105
Driver's Seat Back Tilt 41, 43
Driving. 380

E-85 Fuel 510
Electrical Outlet, Auxiliary (Power Outlet) 116
Electric Parking Brake 262
Electronic Brake Control System 171
Anti-Lock Brake System 170
Electronic Roll Mitigation 179
Traction Control System 174
Electronic Range Select (ERS) 274
Electronic Speed Control (Cruise Control) 287, 290
Electronic Stability Control (ESC) 175
Electronic Throttle Control Warning Light 144
Emergency, In Case Of
Hazard Warning Flasher 387
Jacking 408, 471
Jump Starting 425
Overheating 429
Emission Control System Maintenance. 167
Engine 443, 444
Air Cleaner 449
Block Heater 261
Break-In Recommendations 262
Checking Oil Level 445
Cooling 464
Exhaust Gas Caution 251, 510
Fails To Start 260
Flooded, Starting 260
Jump Starting 425
Oil 447, 512
Oil Filler Cap 443, 444, 448
Oil Filter 449
Oil Selection 447, 512
Oil Synthetic 448
Overheating 429
Engine Oil Viscosity. 448
Engine Oil Viscosity Chart 448
Enhanced Accident Response Feature 231, 436
Ethanol 507, 510
Exhaust Gas Caution. 251, 510
Exhaust System 251, 462
Exterior Lighting. 61

Exterior Lights 61, 254

Filters
  Air Cleaner 449
  Air Conditioning 91, 454
  Engine Oil 449
  Engine Oil Disposal 449
Flashers
  Hazard Warning 387
  Turn Signal 65, 159, 254
Flash-To-Pass 65
Flexible Fuel Vehicles
  Cruising Range 512
  Engine Oil 511
  Fuel Requirements 510, 511
  Maintenance 512
  Replacement Parts 512
  Starting 512
Flooded Engine Starting 260
Floor Console 112
Fluid Capacities. 512
Fluid Leaks. 254
Fluid Level Checks
  Brake 469
  Engine Oil 445
Fluids And Lubricants 513
Fog Lights 64
Folding Rear Seat. 41, 46
Forward Collision Warning. 193
Four Wheel Drive 275
Freeing A Stuck Vehicle 430
Fuel
  Additives 509
  Clean Air 507
  Ethanol 507, 510
  Filler Cap (Gas Cap) 361
  Light 152
  Materials Added 509
  Methanol 507
  Tank Capacity 512
Fuel, Flexible. 510
Fuses 396

Garage Door Opener (HomeLink). 105, 109
Gas Cap (Fuel Filler Cap). 361
Gasoline, Clean Air 507
Gasoline, Reformulated 507
Gear Ranges 270
Gear Select Lever Override. 430
Glass Cleaning 501

Gross Axle Weight Rating 365
Gross Vehicle Weight Rating 364
GVWR 363

Hazard Warning Flasher 387
Headlights
  Automatic 62
  Cleaning 498
  Delay 63
  High Beam/Low Beam Select Switch 65
  Lights On Reminder 63
  On With Wipers 62
  Passing 65
  Switch 61
  Time Delay 63
Head Restraints 52
Head Rests 52
Heated Mirrors 60
Heater, Engine Block 261
High Beam/Low Beam Select (Dimmer) Switch 65
Hill Descent Control 180
Hill Descent Control Indicator 180
Hill Start Assist 172
Hitches
  Trailer Towing 366
Holder, Coin 112
Holder, Cup 114
HomeLink (Garage Door Opener) 105
Hood Prop 100
Hood Release 100

Inside Rearview Mirror 57, 58, 387
Instrument Cluster 126, 143, 156, 159
  Instrument Cluster 131
Instrument Cluster Display
  Information Display 129, 131
Instrument Panel Lens Cleaning 500
Interior Appearance Care 499
Interior Lights 66
Intermittent Wipers (Delay Wipers) 72
Introduction 4
Inverter, Power 119

Jacking Instructions 410
Jack Location 408
Jack Operation 408, 410, 471
Jump Starting 425

Key Fob
  Arm The Alarm 33

Disarm The Alarm 33
Programming Additional Key Fobs 24, 32
Key Fob Battery Service (Remote Keyless Entry) 21
Key Fob Programming (Remote Keyless Entry) 24
Key-In Reminder. 26
Keyless Enter-N-Go. 36
Lock The Vehicle's Doors 531
Passive Entry Programming 531
Unlock Liftgate 531
Key, Replacement. 24, 31
Keys 19

Lane Change And Turn Signals 65
Lane Change Assist. 65
LaneSense. 352
Lap/Shoulder Belts 205
Latches. 254
Hood 100
Leaks, Fluid 254
Life Of Tires 485
Liftgate 101, 103
Liftgate Window Wiper/Washer 73
Light Bulbs. 254
Lights. 254
Air Bag 139, 215, 252
Automatic Headlights 62
Battery Saver 66
Brake Assist Warning 178
Brake Warning 140
Bulb Replacement 392
Cruise 161, 162, 163, 164, 165, 166
Daytime Running 63
Dimmer Switch, Headlight 64, 65
Engine Temperature Warning 143
Exterior 254
Fog 64
Hazard Warning Flasher 387
Headlights 61
Headlights On Reminder 63
Headlights On With Wipers 62
Headlight Switch 61
High Beam 65
High Beam/Low Beam Select 65
Hill Descent Control Indicator 180
Instrument Cluster 61
Intensity Control 67
Interior 66
Lights On Reminder 63
Low Fuel 152
Malfunction Indicator (Check Engine) 146

Parade Mode (Daytime Brightness) 68
Park 158, 160
Passing 65
Seat Belt Reminder 139
Security Alarm 141
Service 392
Tire Pressure Monitoring (TPMS) 150, 196
Traction Control 178
Turn Signal 64, 65, 159, 254
Vanity Mirror 61, 115
Warning (Instrument Cluster Description) 143, 159
Load Floor, Cargo 103
Loading Vehicle. 362
Tires 477
Load Shed
Battery Saver Mode 136
Battery Saver On 136
Electrical Load Reduction 136
Intelligent Battery Sensor 136
Locks
Auto Unlock 40
Child Protection 40
Power Door 35
Low Tire Pressure System. 196
Lubrication, Body 457
Luggage Carrier 122
Lug Nuts 505

Maintenance Free Battery 446
Maintenance Schedule 439
Malfunction Indicator Light (Check Engine) 146, 167
Manual, Service. 587
Memory Feature (Memory Seat) 41, 48
Memory Seat 41, 48
Memory Seats And Radio 41, 48
Methanol 507
Mirrors 57
Heated 60
Outside 59
Rearview 57, 58, 387
Vanity 61, 115
Modifications/Alterations, Vehicle 7
Monitor, Tire Pressure System. 196
Mopar Parts 587
Multi-Function Control Lever. 64

New Vehicle Break-In Period 262

Occupant Restraints 202, 203
Oil, Engine 447

Capacity 512
Change Interval 447
Checking 445
Dipstick 445
Disposal 449
Filter 449
Filter Disposal 449
Identification Logo 447
Materials Added To 448
Pressure Warning Light 142
Recommendation 447, 512
Synthetic 448
Viscosity 448, 512
Oil Filter, Change 449
Oil Filter, Selection. 449
Oil Pressure Light 142
Onboard Diagnostic System 166
Opener, Garage Door (HomeLink). 105
Operating Precautions 166
Operator Manual (Owner's Manual) 5
Outside Rearview Mirrors 59
Overheating, Engine 429
Owner's Manual (Operator Manual) 5, 587

Paint Care. 497
Parking Brake 262
ParkSense System, Rear 310, 318
Personalized Menu Bar 519
Pets 250
Placard, Tire And Loading Information 477
Power
Brakes 505
Door Locks 35
Inverter 119
Outlet (Auxiliary Electrical Outlet) 116
Sunroof 96
Windows 93
Pregnant Women And Seat Belts 211
Preparation For Jacking 410
Pretensioners
Seat Belts 212

Radial Ply Tires 483
Radiator Cap (Coolant Pressure Cap). 466
Radio Frequency
General Information 24, 30, 32, 40
Radio Operation 562
Radio Remote Controls 560
Rain Sensitive Wiper System 71
Rear Camera 359

Rear Cross Path 191
Rear ParkSense System 310, 318
Rear Seat, Folding 41, 46
Rear Window Defroster 74
Rear Window Features. 73
Rear Wiper/Washer. 73
Recreational Towing. 373
Shifting Into Power Transfer Unit Neutral (N) 377
Shifting Into Transfer Case Neutral (N) 377
Shifting Out Of Power Transfer Unit Neutral (N) . .379
Shifting Out Of Transfer Case Neutral (N) 379
Reformulated Gasoline. 507
Refrigerant 454
Release, Hood 100
Reminder, Lights On 63
Reminder, Seat Belt 204
Remote Control
Starting System 27
Remote Keyless Entry
Arm The Alarm 33
Disarm The Alarm 33
Programming Additional Key Fobs 24, 32
Remote Sound System (Radio) Controls. 560
Remote Starting
Exit Remote Start Mode 29
Uconnect Customer Programmable Features . . .30, 533
Uconnect Settings 30, 533
Remote Starting System. 27
Replacement Keys 24, 31
Replacement Tires 486
Reporting Safety Defects 587
Restraint, Head. 52
Restraints, Child 233
Roll Over Warning 4
Roof Type Carrier 122
Rotation, Tires. 493

Safety Checks Inside Vehicle. 252
Safety Checks Outside Vehicle 254
Safety Defects, Reporting 587
Safety, Exhaust Gas 251
Safety Information, Tire 471
Safety Tips 251
Schedule, Maintenance. 439
Seat Belt
Adjustable Upper Shoulder Belt Anchorage 209
Automatic Locking Retractor (ALR) 212
Energy Management Feature 212
Lap/Shoulder Belt Operation 207
Lap/Shoulder Belts 205

Lap/Shoulder Belt Untwisting 209
Pregnant Women 211
Seat Belt Extender 211
Seat Belt Pretensioner 212
Seat Belt Reminder 204
Seat Belt Maintenance 499
Seat Belt Reminder 204
Seat Belts 204, 252
Adjustable Shoulder Belt 209
Adjustable Upper Shoulder Anchorage 209
Child Restraint 233
Extender 211
Front Seat 204, 205, 207
Inspection 252
Operating Instructions 207
Pregnant Women 211
Pretensioners 212
Rear Seat 205
Reminder 139
Untwisting Procedure 209
Seats 41, 51
Adjustment 41, 42
Easy Entry 41, 50
Head Restraints 52
Heated 41, 51
Memory 41, 48
Rear Folding 41, 46
Seatback Release 41, 43, 46
Tilting 41, 43
Vented 41, 52
Ventilated 41, 52
Security Alarm 32, 141
Arm The System 33
Disarm The System 33
Selec-Terrain 282
Sentry Key
Key Programming 32
Sentry Key Replacement 24, 31
Service Assistance 584
Service Contract 586
Service Manuals 587
Shifting
Automatic Transmission 268
Power Transfer Unit, Shifting Into Power Transfer Unit Neutral (N) 377, 379
Transfer Case, Shifting Into Transfer Case Neutral (N) 377
Transfer Case, Shifting Out Of Transfer Case Neutral (N) 379
Shift Lever Override 430

Shoulder Belts 205
Side View Mirror Adjustment 59
Signals, Turn 65, 159, 254
Siri 577, 578
Snow Chains (Tire Chains) 491
Snow Tires 488
Spare Tire 488, 489, 490
Speed Control
  Accel/Decel 290
  Cancel 290
  Resume 290
Speed Control (Cruise Control). 287, 290
Starting 27
  Cold Weather 260
  Engine Fails To Start 260
  Remote 27
Steering 56
  Column Controls 64
  Tilt Column 56
  Wheel, Heated 56
  Wheel, Tilt 56
Steering Wheel Audio Controls 560
Steering Wheel Mounted Sound System Controls 560
Storage 113
Storage, Vehicle. 91
Stuck, Freeing 430
Sun Roof 96
Sun Visor Extension 61
Supplemental Restraint System - Air Bag 216
Sway Control, Trailer 179
Synthetic Engine Oil 448
System, Remote Starting 27

Telescoping Steering Column 56
Temperature Control, Automatic (ATC) 90
Tie Down Hooks, Cargo 103
Tilt Steering Column 56
Time Delay, Headlight 63
Tire And Loading Information Placard. 477
Tire Markings 472
Tires 254, 481, 488, 495
  Aging (Life Of Tires) 485
  Air Pressure 481
  Chains 491
  Changing 408, 471
  Compact Spare 489
  General Information 481, 488
  High Speed 483
  Inflation Pressures 482
  Jacking 408, 471

Life Of Tires 485
Load Capacity 477, 478
Pressure Monitor System (TPMS) 196
Pressure Warning Light 150
Quality Grading 495
Radial 483
Replacement 486
Rotation 493
Safety 471, 481
Sizes 473
Snow Tires 488
Spare Tire 488, 489, 490
Spinning 484
Trailer Towing 369
Tread Wear Indicators 484
Wheel Nut Torque 505
Tire Safety Information. 471
Tire Service Kit 417, 418, 419, 420, 421, 423, 424
Tongue Weight/Trailer Weight 368
To Open Hood 100
Torque Converter Clutch 275
Towing 364, 367, 432
Disabled Vehicle 432
Recreational 373
Towing Vehicle Behind A Motorhome 373
Traction Control 174
Trailer Sway Control (TSC). 179
Trailer Towing. 364
Cooling System Tips 373
Hitches 366
Minimum Requirements 368
Tips 372
Trailer And Tongue Weight 367, 368
Wiring 371
Trailer Towing Guide. 367
Trailer Weight 367
Transaxle 267
Automatic 267
Operation 267
Transmission. 268
Automatic 268, 470
Maintenance 470
Transmitter, Garage Door Opener (HomeLink) 105
Transporting Pets 250
Tread Wear Indicators 484
Turn Signals. 65, 159

Uconnect
Customer Programmable Features 30, 533
Uconnect Settings 30, 533

Uconnect 8.4/8.4 NAV 580
Uconnect Access
Vehicle Health Alert 574
Uconnect Settings
Customer Programmable Features 531
Passive Entry Programming 531
Uconnect Settings 531
Uconnect Voice Command 563
Uniform Tire Quality Grades 495
Universal Transmitter. 105
Untwisting Procedure, Seat Belt 209

Vanity Mirrors 61, 115
Vehicle Loading 362, 478
Vehicle Modifications/Alterations. 7
Vehicle Security Alarm (Security Alarm) 32
Vehicle Storage 91
Viscosity, Engine Oil 448
Voice Recognition System (VR) 563

Warning Flasher, Hazard 387
Warning, Roll Over. 4
Warnings And Cautions 7
Warranty Information 587
Washers, Windshield. 69, 445
Washing Vehicle 498
Wheel And Wheel Trim 490
Wheel And Wheel Trim Care 490
Wind Buffeting 99
Window Fogging 91
Windows
Close 93
Down 93
Open 93
Power 93
Up 93
Windshield Defroster 252
Windshield Washers 69, 445
Fluid 445
Windshield Wiper Blades 457
Windshield Wipers 69
Wiper Blade Replacement. 457
Wipers, Intermittent 72
Wipers, Rain Sensitive 71
Wireless Charging Pad 120

INSTALLATION OF RADIO TRANSMITTING EQUIPMENT

Special design considerations are incorporated into this vehicle's electronic system to provide immunity to radio frequency signals. Mobile two-way radios and telephone equipment must be installed properly by trained personnel. The following must be observed during installation.

The positive power connection should be made directly to the battery and fused as close to the battery as possible. The negative power connection should be made to body sheet metal adjacent to the negative battery connection. This connection should not be fused.

Antennas for two-way radios should be mounted on the roof or the rear area of the vehicle. Care should be used in mounting antennas with magnet bases. Magnets may affect the accuracy or operation of the compass on vehicles so equipped.

The antenna cable should be as short as practical and routed away from the vehicle wiring when possible. Use only fully shielded coaxial cable.

Carefully match the antenna and cable to the radio to ensure a low Standing Wave Ratio (SWR).

Mobile radio equipment with output power greater than normal may require special precautions.

All installations should be checked for possible interference between the communications equipment and the vehicle's electronic systems.

STICK WITH THE SPECIALISTS®

17KL74-126-AD
©2016 FCA US LLC. All Rights Reserved.
Jeep is a registered trademark of FCA US LLC.

Fourth Edition
Printed in U.S.A.