## TABLE OF CONTENTS


| | | |
|---|---|---|
| 1 | **Before driving** | Adjusting and operating features such as door locks, mirrors, and steering column |
| 2 | **When driving** | Driving, stopping and safe-driving information |
| 3 | **Interior features** | Air conditioning and audio systems, as well as other interior features for a comfortable driving experience |
| 4 | **Maintenance and care** | Cleaning and protecting your vehicle, performing do-it-yourself maintenance, and maintenance information |
| 5 | **When trouble arises** | What to do if the vehicle needs to be towed, gets a flat tire, or is involved in an accident |
| 6 | **Vehicle specifications** | Detailed vehicle information |
| 7 | **For owners** | Reporting safety defects for U.S. owners and seat belt instructions for Canadian owners |
| | **Index** | Alphabetical listing of information contained in this manual |

## 1 Before driving

**1-1. Key information**

Keys ..... 30

**1-2. Opening, closing and locking the doors**

Smart key system..... 34
Wireless remote control ..... 52
Front doors..... 59
Sliding doors ..... 65
Back door ..... 77

**1-3. Adjustable components (seats, mirrors, steering wheel)**

Front seats ..... 89
Rear seats..... 94
Driving position memory..... 114
Head restraints..... 119
Seat belts ..... 122
Steering wheel ..... 131
Inside rear view mirror..... 132
Outside rear view mirrors ..... 134

**1-4. Opening and closing the windows and moon roof**

Power windows..... 138
Quarter windows..... 141
Moon roof ..... 143

**1-5. Refueling**

Opening the fuel tank cap ..... 147

**1-6. Theft deterrent system**

Engine immobilizer system ..... 151
Alarm ..... 154
Theft prevention labels (for U.S.A.) ..... 156

**1-7. Safety information**

Correct driving posture ..... 157
SRS airbags ..... 159
Front passenger occupant classification system..... 172
Child restraint systems ..... 178
Installing child restraints ..... 182

## 2 When driving


**2-1. Driving procedures**

Driving the vehicle..... 200
Engine (ignition) switch (vehicles without smart key system)..... 212
Engine (ignition) switch (vehicles with smart key system)..... 215
Automatic transaxle ..... 221
Turn signal lever ..... 226
Parking brake..... 227
Horn ..... 228

**2-2. Instrument cluster and information display**

Gauges and meters ..... 229
Indicators and warning lights..... 232
Multi-information display ..... 237

**2-3. Operating the lights and wipers**

Headlight switch ..... 251
Automatic High Beam..... 257
Fog light switch..... 264
Windshield wipers and washer..... 265
Rear window wiper and washer..... 270

**2-4. Using other driving systems**

Cruise control ..... 271
Dynamic radar cruise control ..... 275
Intuitive parking assist..... 288
Rear view monitor system..... 295
Driving assist systems..... 299
Hill-start assist control ..... 305
PCS (Pre-Collision System) ..... 307

**2-5. Driving information**

Cargo and luggage..... 314
Vehicle load limits..... 322
Winter driving tips..... 324
Trailer towing..... 328
Dinghy towing..... 341

## 3 Interior features

**3-1. Using the air conditioning system and defogger**

Front manual air conditioning system..... 344
Front automatic air conditioning system..... 352
Rear manual air conditioning system..... 362
Rear automatic air conditioning system..... 365
Rear window and outside rear view mirror defoggers, and windshield wiper de-icer..... 369

**3-2. Using the audio system**

Audio system type..... 371
Using the radio..... 376
Using the CD player..... 386
Playing MP3 and WMA discs..... 396
Operating an iPod® ..... 405
Operating a USB memory..... 412
Optimal use of the audio system..... 420
Using the AUX adapter ..... 425
Using the steering switches ..... 426

**3-3. Using the Bluetooth® audio system**

Bluetooth® audio system .... 430
Using the Bluetooth® audio system ..... 433
Operating a Bluetooth® enabled portable player.... 439
Setting up a Bluetooth® enabled portable player.... 441
Bluetooth® audio system setup ..... 446

**3-4. Using the rear audio system**

Rear seat entertainment system features ..... 447
Using the DVD player (DVD video)..... 459
Using the DVD player (video CD) ..... 468
Using the DVD player (audio CD/CD text) ..... 472
Using the DVD player (WMA/MP3 discs)..... 473
Using the video mode..... 475
Changing the DVD initial setting..... 477

**3-5. Using the hands-free phone system (for cellular phone)**

Hands-free phone system (for cellular phone) features ..... 488
Using the hands-free phone system (for cellular phone) ..... 493
Making a phone call ..... 502
Setting a cellular phone ..... 507
Security and system setup ..... 512
Using the phone book ..... 517

**3-6. Using the interior lights**

Interior lights list ..... 524
• Personal/interior light main switch ..... 525
• Personal/interior lights ..... 526
• Personal lights and rear ceiling lights ..... 527

**3-7. Using the storage features**

List of storage features ..... 530
• Glove boxes ..... 532
• Console box ..... 534
• Overhead console ..... 537
• Cup holders ..... 538
• Bottle holders ..... 541
• Auxiliary boxes ..... 543

**3-8. Other interior features**

Sun visors ..... 548
Vanity mirrors ..... 549
Clock ..... 550
Conversation mirror ..... 551
Power outlets ..... 552
Seat heaters ..... 556
Armrests ..... 558
Rear side sunshades ..... 560
Grocery bag hooks ..... 561
Floor mat ..... 563
Luggage compartment features ..... 565
Garage door opener ..... 567
Compass ..... 573
Safety Connect ..... 578

## 4 Maintenance and care

**4-1. Maintenance and care**

Cleaning and protecting the vehicle exterior ..... 586
Cleaning and protecting the vehicle interior ..... 590

**4-2. Maintenance**

Maintenance requirements ..... 593
General maintenance ..... 595
Emission inspection and maintenance (I/M) programs ..... 599

### 4-3. Do-it-yourself maintenance

Do-it-yourself service precautions ..... 600
Hood..... 604
Positioning a floor jack ..... 606
Engine compartment ..... 608
Tires ..... 626
Tire inflation pressure..... 636
Wheels ..... 640
Air conditioning filter..... 642
Wireless remote control/electronic key battery ..... 645
Checking and replacing fuses..... 648
Light bulbs..... 660

## 5 When trouble arises

### 5-1. Essential information

Emergency flashers ..... 672
If your vehicle needs to be towed ..... 673
If you think something is wrong..... 677
Fuel pump shut off system..... 678
Event data recorder..... 679

### 5-2. Steps to take in an emergency

If a warning light turns on or a warning buzzer sounds... ..... 681
If a warning message is displayed..... 694
If you have a flat tire (vehicles with run-flat tires) ..... 695
If you have a flat tire (vehicles with standard tires) ..... 697
If the engine will not start.... 712
If the shift lever cannot be shifted from P ..... 714
If you lose your keys/wireless remote control transmitter..... 716
If the electronic key does not operate properly ..... 717
If the battery is discharged ..... 720
If your vehicle overheats..... 725
If the vehicle becomes stuck ..... 728
If your vehicle has to be stopped in an emergency..... 730

## 6 Vehicle specifications

**6-1. Specifications**

Maintenance data (fuel, oil level, etc.) ..... 734

Fuel information ..... 746

Tire information ..... 749

**6-2. Customization**

Customizable features ..... 761

**6-3. Initialization**

Items to initialize ..... 768

## 7 For owners

Reporting safety defects for U.S. owners ..... 770

Seat belt instructions for Canadian owners (in French) ..... 771

## Index

**Abbreviation/Acronym list..... 774**

**Alphabetical index ..... 776**

**What to do if... ..... 787**

## Exterior

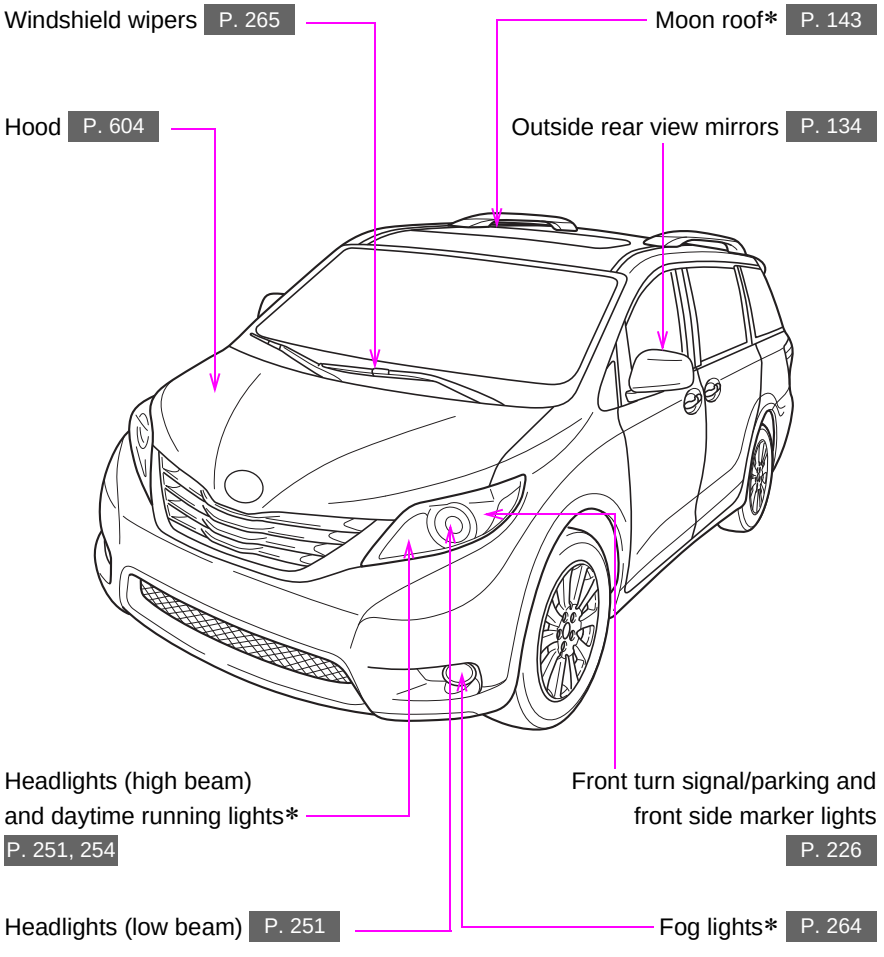
Windshield wipers P. 265
Moon roof* P. 143
Hood P. 604
Outside rear view mirrors P. 134
Headlights (high beam) and daytime running lights* P. 251, 254
Front turn signal/parking and front side marker lights P. 226
Headlights (low beam) P. 251
Fog lights* P. 264

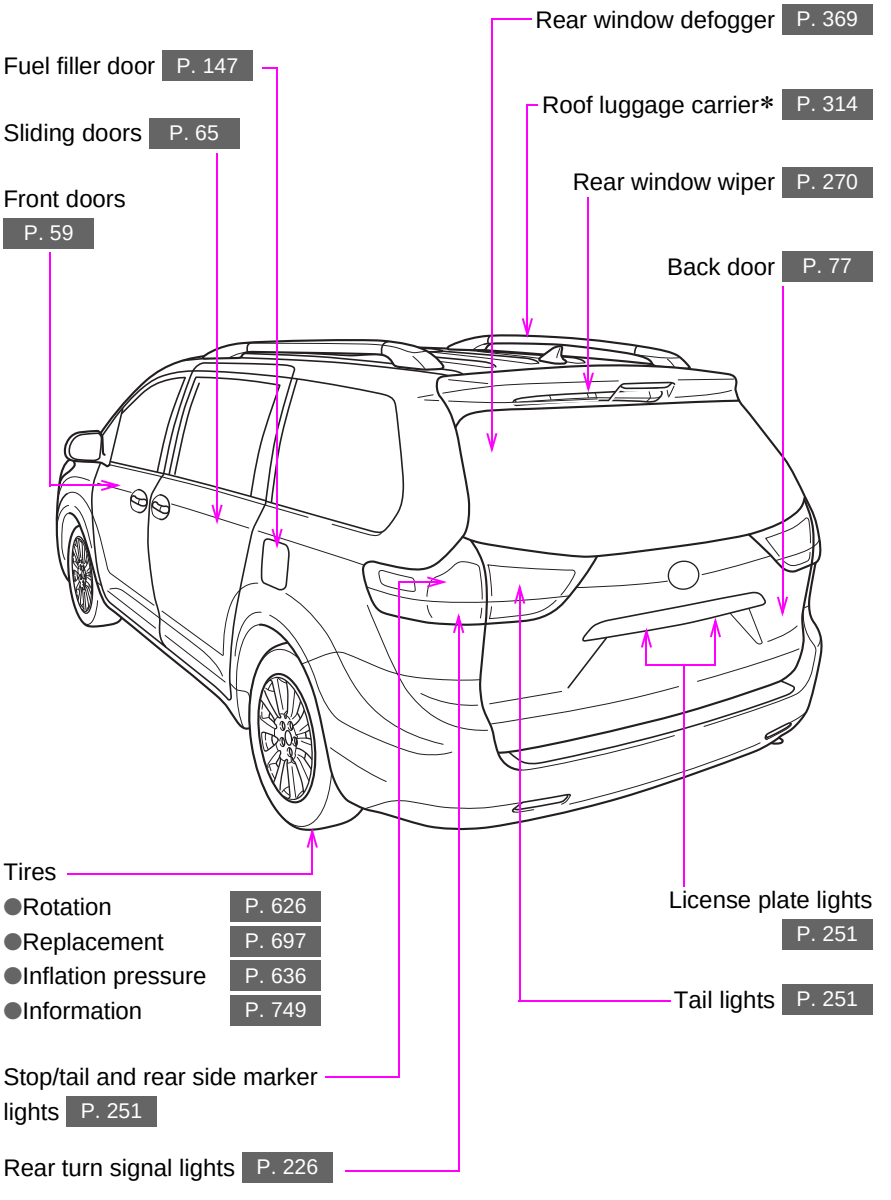
Rear window defogger P. 369
Fuel filler door P. 147
Roof luggage carrier* P. 314
Sliding doors P. 65
Rear window wiper P. 270
Front doors
P. 59
Back door P. 77
Tires
●Rotation P. 626
●Replacement P. 697
●Inflation pressure P. 636
●Information P. 749
License plate lights
P. 251
Tail lights P. 251
Stop/tail and rear side marker lights P. 251
Rear turn signal lights P. 226

*: If equipped

## Interior

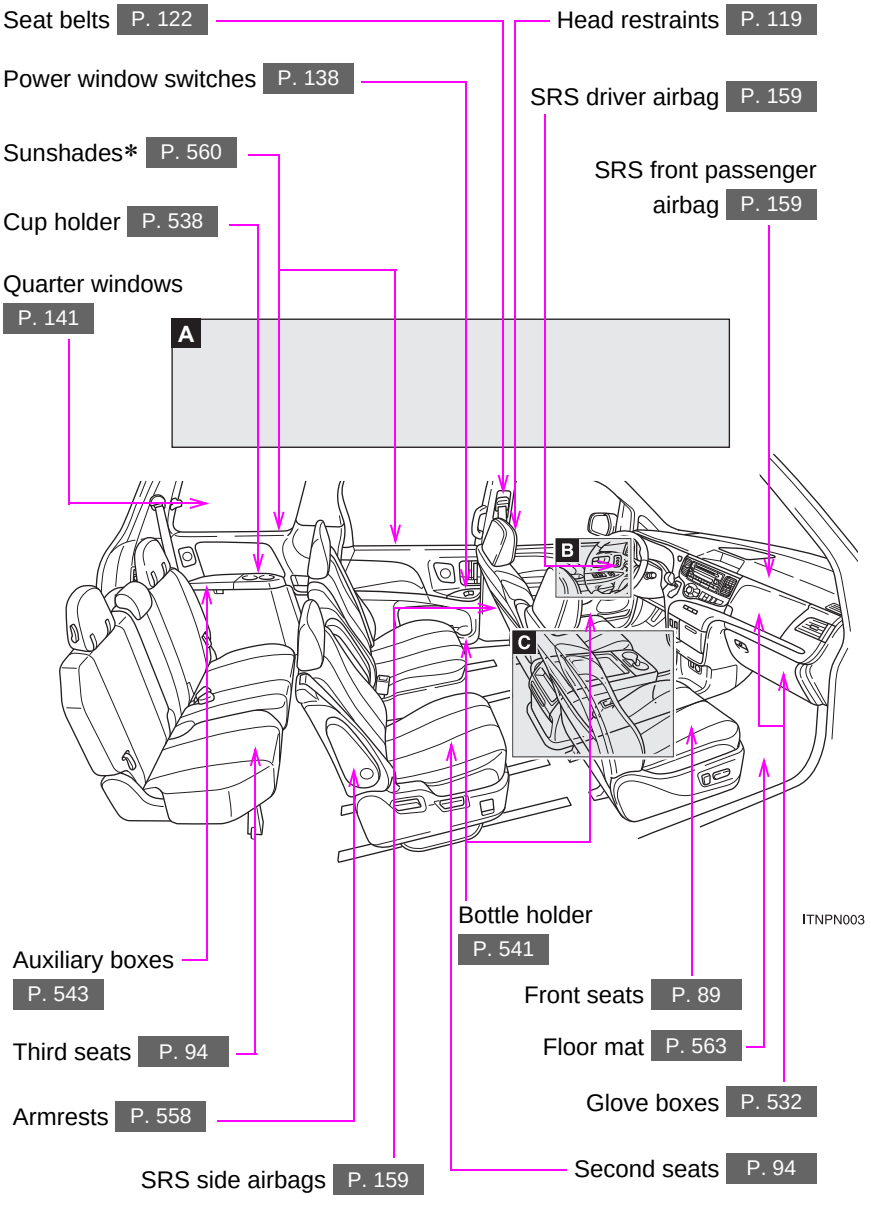
Seat belts P. 122
Power window switches P. 138
Sunshades* P. 560
Cup holder P. 538
Quarter windows P. 141
A
Head restraints P. 119
SRS driver airbag P. 159
SRS front passenger airbag P. 159
B
C
Bottle holder P. 541
ITNPN003
Auxiliary boxes P. 543
Third seats P. 94
Armrests P. 558
SRS side airbags P. 159
Front seats P. 89
Floor mat P. 563
Glove boxes P. 532
Second seats P. 94

**A**

**Vehicles without overhead consoles**

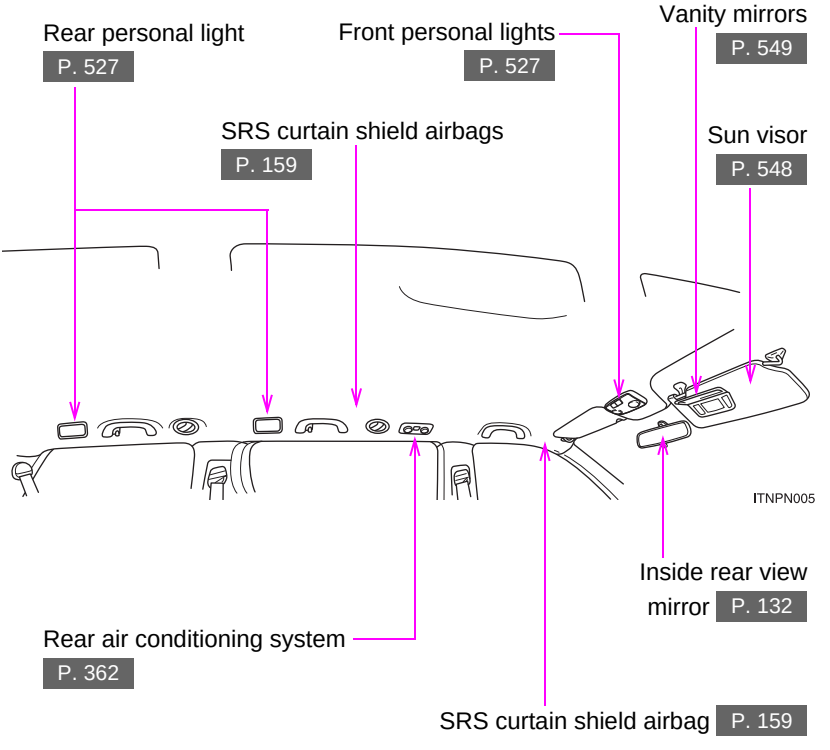


*: If equipped

**A**

**Vehicles with overhead consoles**

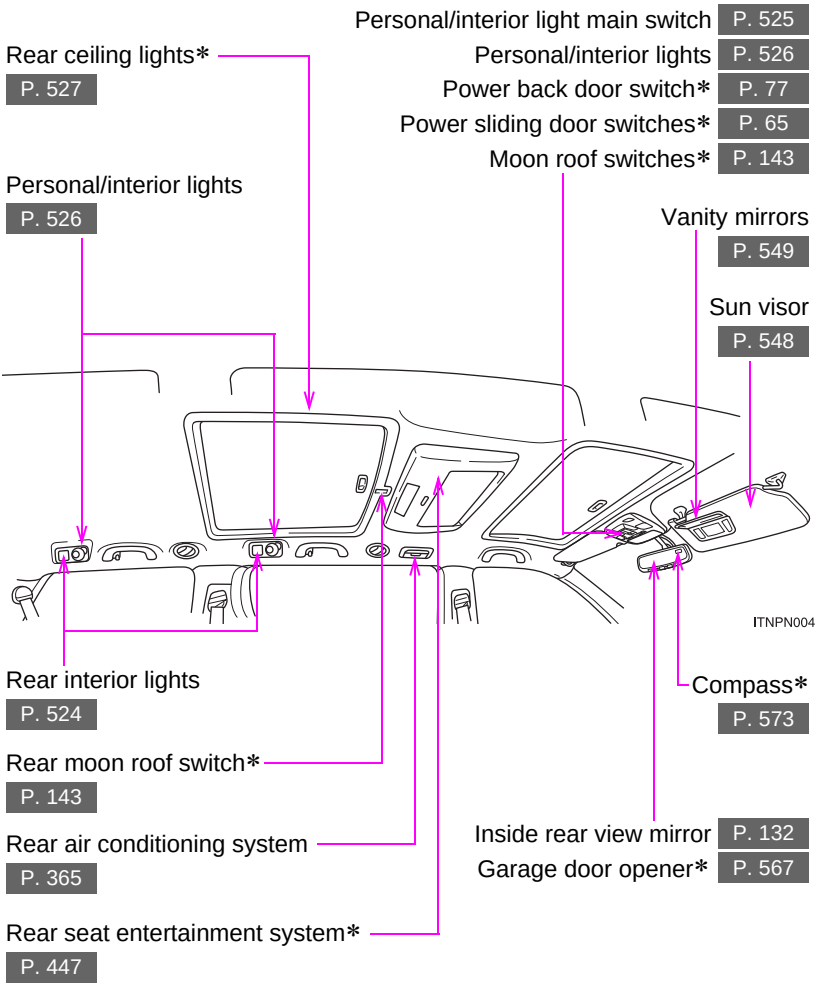

**B**

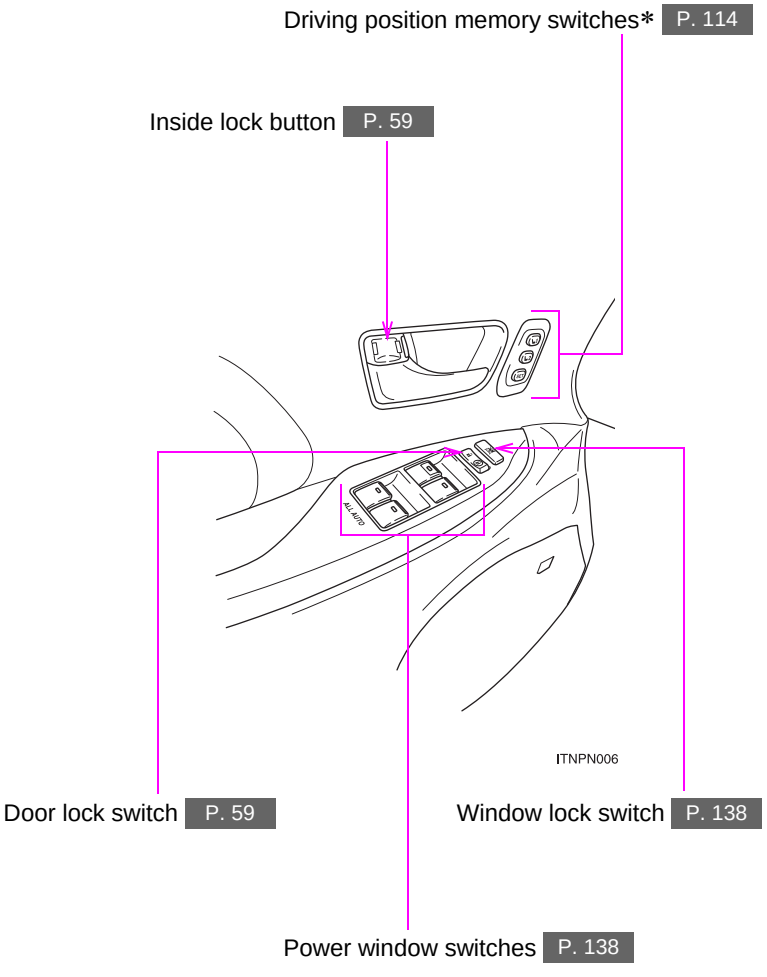


*: If equipped

## C

**Vehicles with a console box type A**

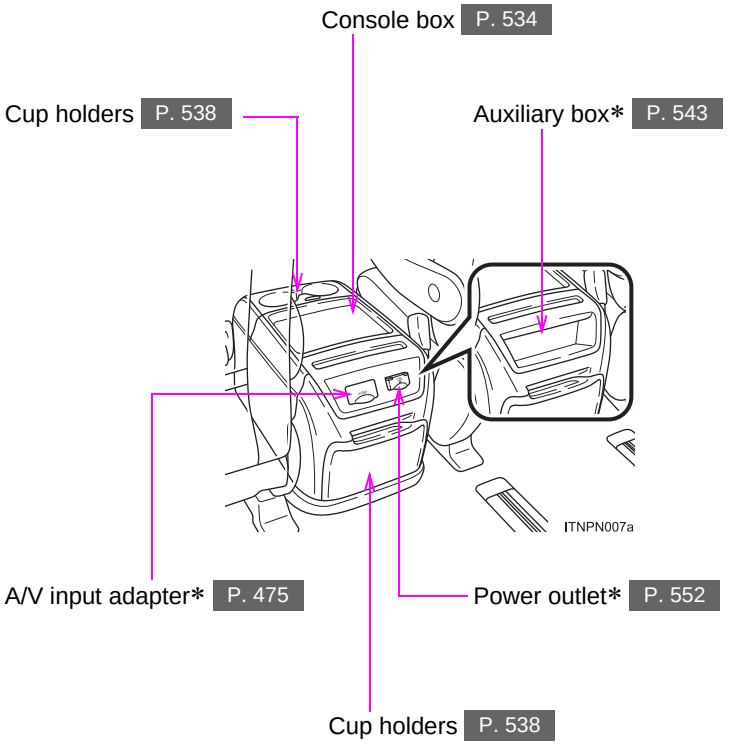

**C**

**Vehicles with a console box type B**

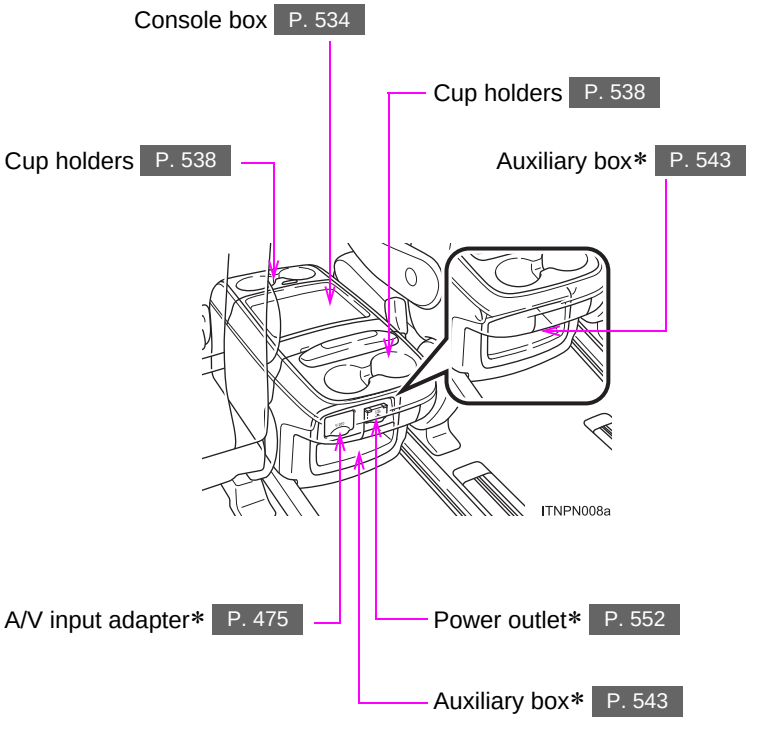


*: If equipped

## Instrument panel

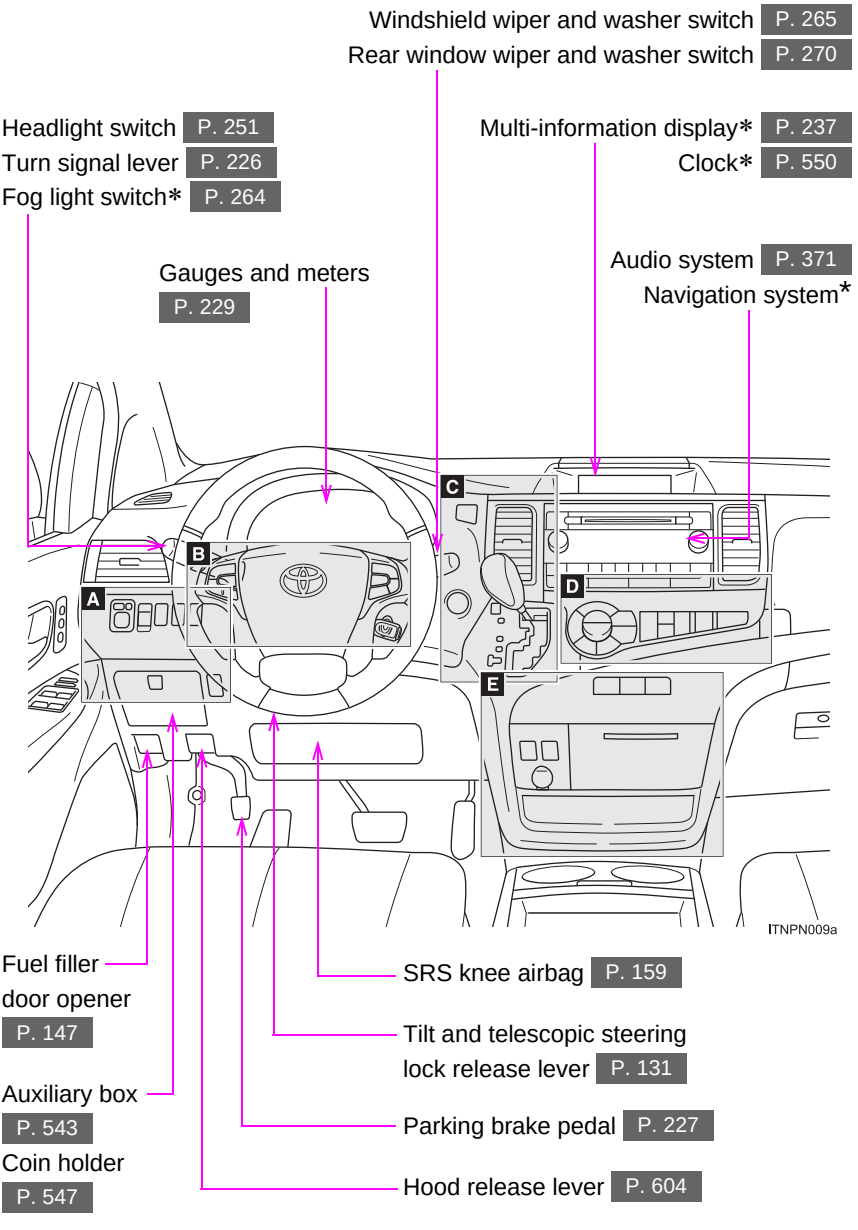

**A**

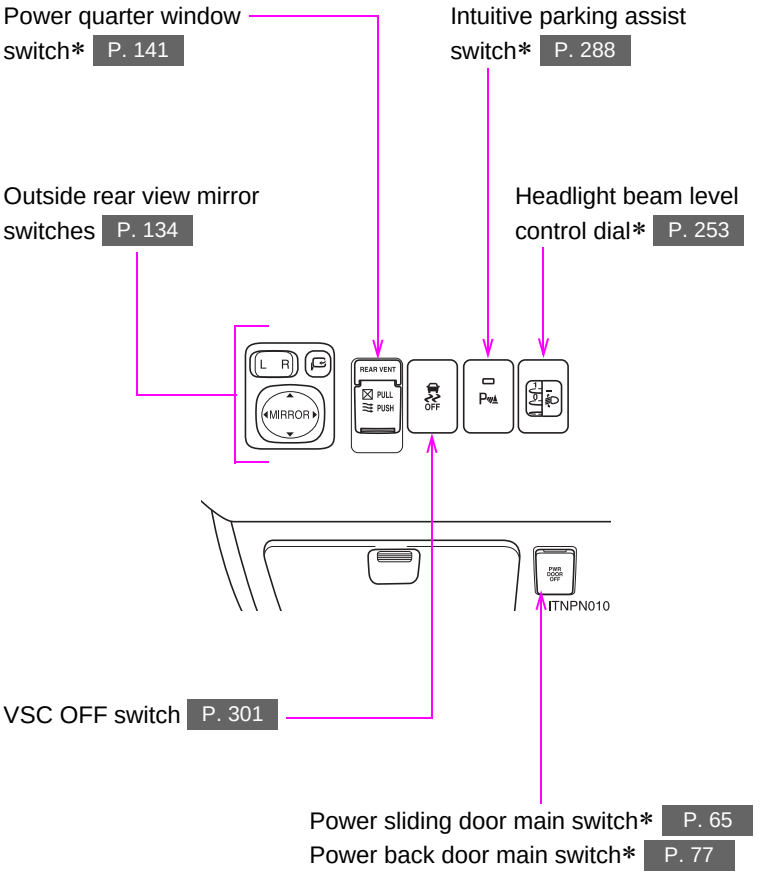


*: If equipped
*: Refer to “NAVIGATION SYSTEM OWNER’S MANUAL”.

## Instrument panel

**B**

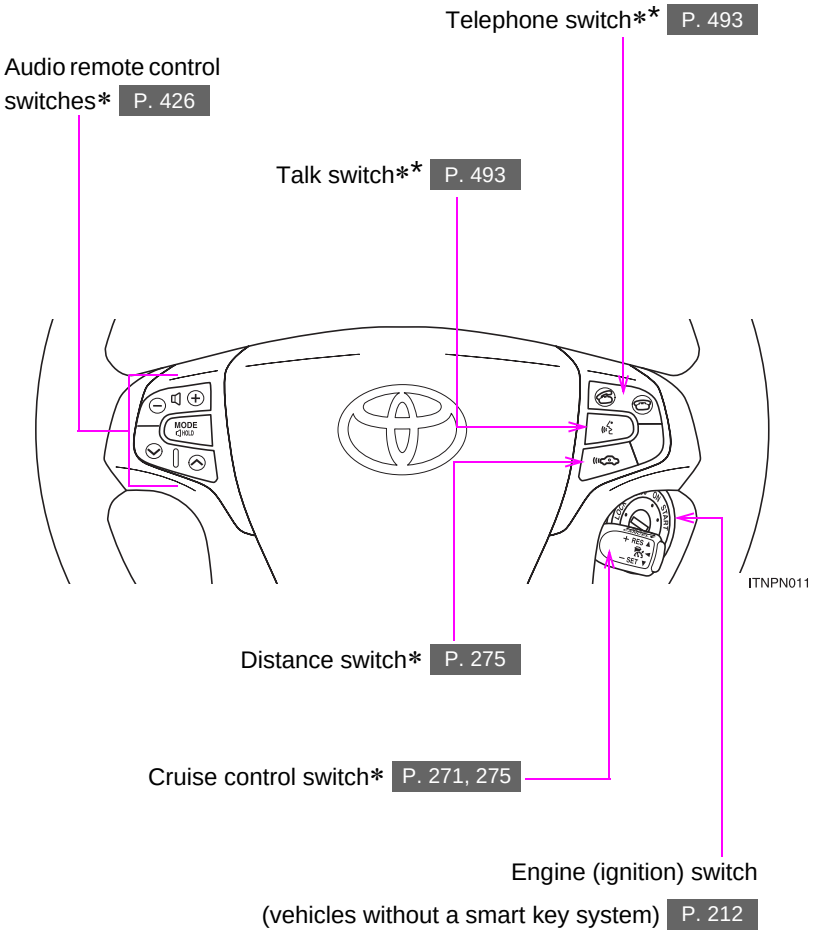

C

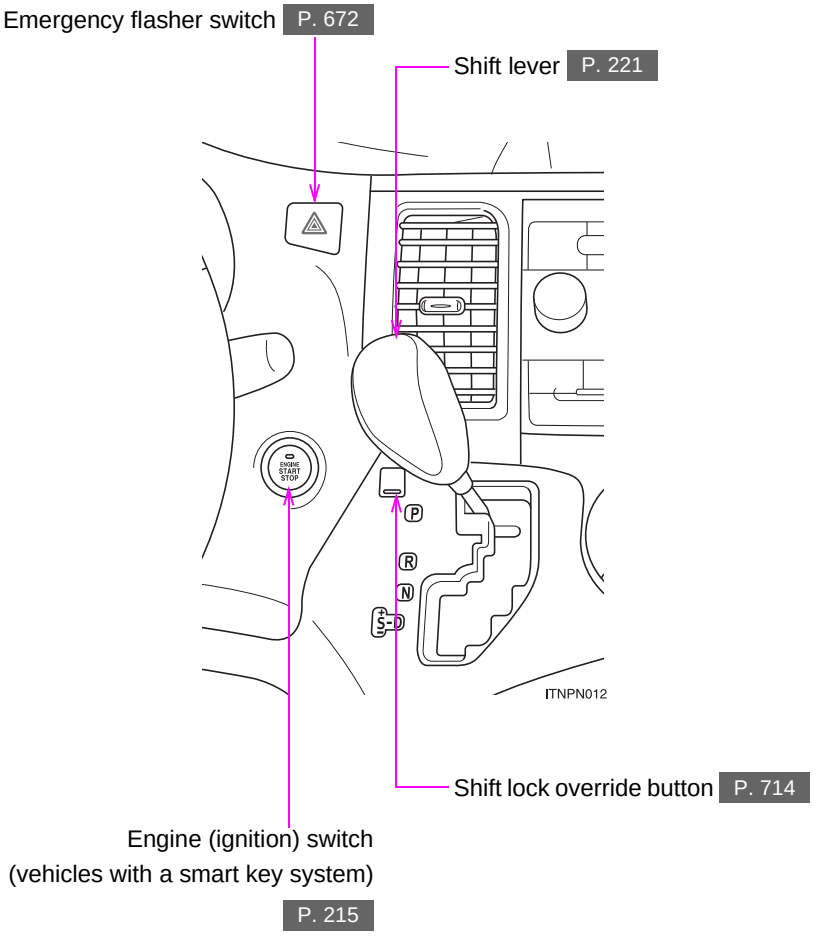


*: If equipped
*: Refer to “NAVIGATION SYSTEM OWNER’S MANUAL”.

**D**

**Vehicles with a manual air conditioning system**

Air conditioning system P. 344

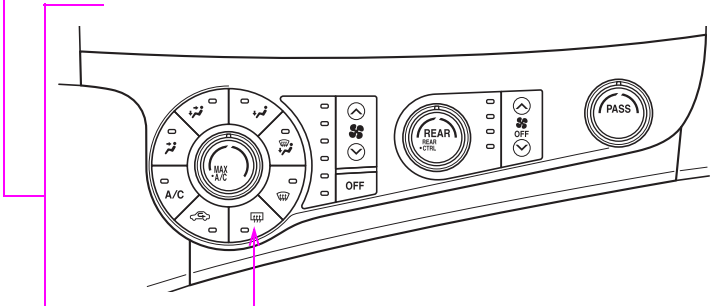


ITNPN014a

Rear window defogger switch P. 369

**Vehicles with an automatic air conditioning system**

Air conditioning system P. 352

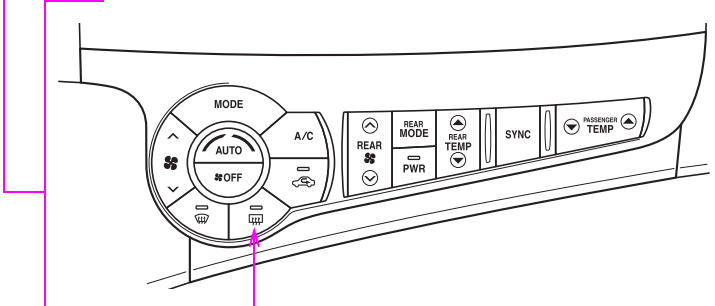


ITNPN013

Rear window defogger switch P. 369

**E**

**Type A**

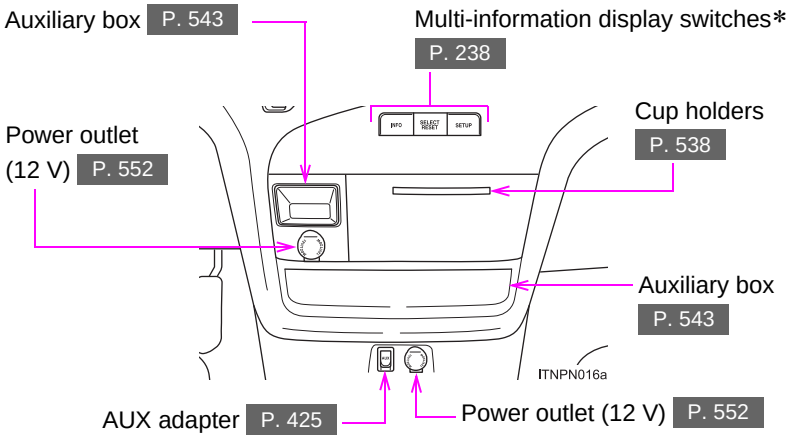


**Type B**

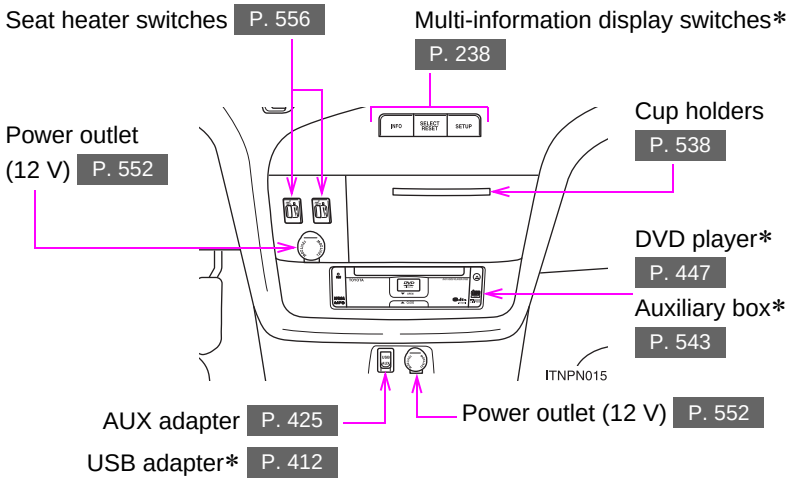


*: If equipped

## Luggage compartment

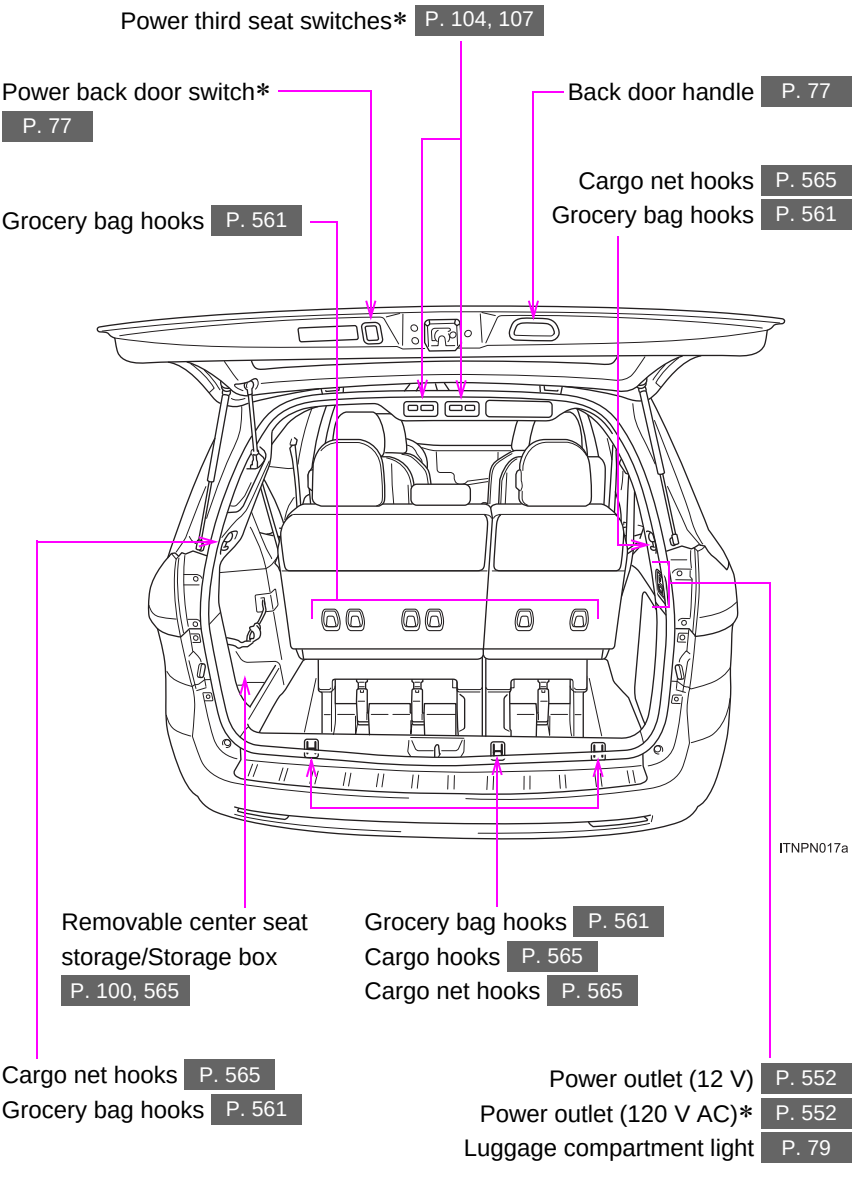

*: If equipped

# For your information

## Main Owner’s Manual

Please note that this manual applies to all models and all equipment, including options. Therefore, you may find some explanations for equipment not installed on your vehicle.

All specifications provided in this manual are current at the time of printing. However, because of the Toyota policy of continual product improvement, we reserve the right to make changes at any time without notice.

Depending on specifications, the vehicle shown in the illustrations may differ from your vehicle in terms of equipment.

## Noise from under vehicle after turning off the engine

Approximately five hours after the engine is turned off, you may hear sound coming from under the vehicle for several minutes. This is the sound of a fuel evaporation leakage check and, it does not indicate a malfunction.

## Accessories, spare parts and modification of your Toyota

A wide variety of non-genuine spare parts and accessories for Toyota vehicles are currently available on the market. You should know that Toyota does not warrant these products and is not responsible for their performance, repair, or replacement, or for any damage they may cause to, or adverse effect they may have on, your Toyota vehicle.

This vehicle should not be modified with non-genuine Toyota products. Modification with non-genuine Toyota products could affect its performance, safety or durability, and may even violate governmental regulations. In addition, damage or performance problems resulting from the modification may not be covered under warranty.

## Installation of a mobile two-way radio system

As the installation of a mobile two-way radio system in your vehicle may affect electronic systems such as the multi-port fuel injection system/sequential multi-port fuel injection system, cruise control system, anti-lock brake system, SRS airbag system and seat belt pretensioner system, be sure to check with your Toyota dealer for precautionary measures or special instructions regarding installation.

## Scrapping of your Toyota

The SRS airbag and seat belt pretensioner devices in your Toyota contain explosive chemicals. If the vehicle is scrapped with the airbags and seat belt pretensioners left as they are, this may cause an accident such as fire. Be sure to have the systems of the SRS airbag and seat belt pretensioner removed and disposed of by a qualified service shop or by your Toyota dealer before you scrap your vehicle.

## Perchlorate Material

Special handling may apply,
See www.dtsc.ca.gov/hazardouswaste/perchlorate.

Your vehicle has components that may contain perchlorate. These components may include airbags, seat belt pretensioners, and wireless remote control batteries.

CAUTION

**General precautions while driving**

Driving under the influence: Never drive your vehicle when under the influence of alcohol or drugs that have impaired your ability to operate your vehicle. Alcohol and certain drugs delay reaction time, impair judgment and reduce coordination, which could lead to an accident that could result in death or serious injury.

Defensive driving: Always drive defensively. Anticipate mistakes that other drivers or pedestrians might make and be ready to avoid accidents.

Driver distraction: Always give your full attention to driving. Anything that distracts the driver, such as adjusting controls, talking on a cellular phone or reading can result in a collision with resulting death or serious injury to you, your occupants or others.

**General precaution regarding children's safety**

Never leave children unattended in the vehicle, and never allow children to have or use the key.

Children may be able to start the vehicle or shift the vehicle into neutral. There is also a danger that children may injure themselves by playing with the cigarette lighter, the windows, the moon roof, or other features of the vehicle. In addition, heat build-up or extremely cold temperatures inside the vehicle can be fatal to children.

# Symbols used throughout this manual

## Cautions & Notices

**⚠ CAUTION**

This is a warning against anything which may cause death or injury to people if the warning is ignored. You are informed about what you must or must not do in order to reduce the risk of injury to yourself and others.

**⚠ NOTICE**

This is a warning against anything which may cause damage to the vehicle or its equipment if the warning is ignored. You are informed about what you must or must not do in order to avoid or reduce the risk of damage to your Toyota and its equipment.

## Symbols used in illustrations

### Safety symbol

The symbol of a circle with a slash through it means “Do not”, “Do not do this”, or “Do not let this happen”.

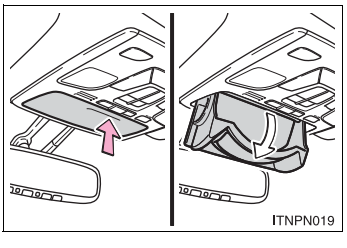


### Arrows indicating operations

➡ Indicates the action (pushing, turning, etc.) used to operate switches and other devices.

⇨ Indicates the outcome of an operation (e.g. a lid opens).

# Before driving 1


**1-1. Key information**

Keys ..... 30

**1-2. Opening, closing and locking the doors**

Smart key system ..... 34
Wireless remote control ..... 52
Front doors..... 59
Sliding doors ..... 65
Back door..... 77

**1-3. Adjustable components (seats, mirrors, steering wheel)**

Front seats ..... 89
Rear seats..... 94
Driving position memory..... 114
Head restraints..... 119
Seat belts ..... 122
Steering wheel ..... 131
Inside rear view mirror ..... 132
Outside rear view mirrors ..... 134

**1-4. Opening and closing the windows and moon roof**

Power windows ..... 138
Quarter windows ..... 141
Moon roof..... 143

**1-5. Refueling**

Opening the fuel tank cap ..... 147

**1-6. Theft deterrent system**

Engine immobilizer system ..... 151
Alarm..... 154
Theft prevention labels (for U.S.A.) ..... 156

**1-7. Safety information**

Correct driving posture..... 157
SRS airbags..... 159
Front passenger occupant classification system ..... 172
Child restraint systems..... 178
Installing child restraints..... 182

**The following keys are provided with the vehicle.**

### Vehicles without a smart key system (type A)

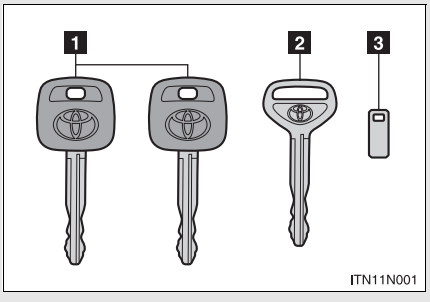


1 Master keys
2 Valet key
3 Key number plate

### Vehicles without a smart key system (type B)

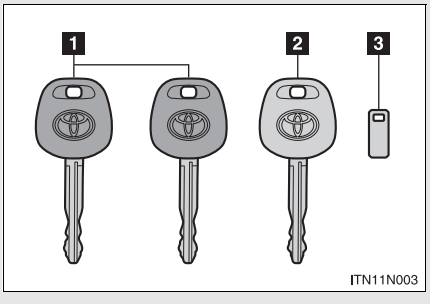


1 Master keys (black)
2 Valet key (gray)
3 Key number plate

### Vehicles with a smart key system

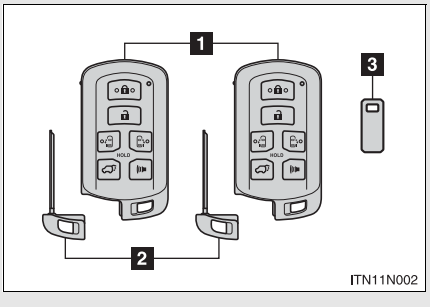


1 Electronic keys
- Operating the smart key system (→P. 34)
- Operating the wireless remote control function (→P. 52)

2 Mechanical keys
3 Key number plate

## Using the mechanical key (vehicles with a smart key system)

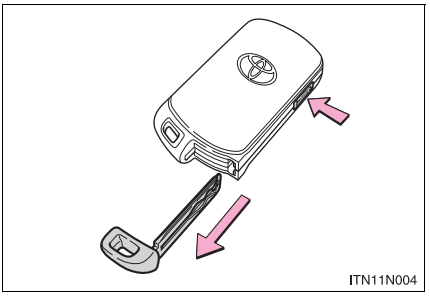


To take out the mechanical key, push the release button and take the key out.

The mechanical key can only be inserted in one direction, as the key only has grooves on one side. If the key cannot be inserted in a lock cylinder, turn it over and re-attempt to insert it.

After using the mechanical key, store it in the electronic key. Carry the mechanical key together with the electronic key. If the electronic key battery is depleted or the entry function does not operate properly, you will need the mechanical key. (→P. 717)

### ■ When required to leave the vehicle's key with a parking attendant

Lock the glove box as circumstances demand. (→P. 532)

On vehicles without the smart key system, provide the attendant with the valet key.

On vehicles with the smart key system, remove the mechanical key for your own use and provide the attendant with the electronic key only.

### ■ Key number plate

Keep the plate in a safe place such as your wallet, not in the vehicle. In the event that a key (without a smart key system) or mechanical key (with a smart key system) is lost, a new key can be made by your Toyota dealer using the key number plate. (→P. 716)

### ■ When riding in an aircraft

When bringing a key with wireless remote control function onto an aircraft, make sure you do not press any buttons on the key while inside the aircraft cabin. If you are carrying the key in your bag etc., ensure that the buttons are not likely to be pressed accidentally. Pressing a button may cause the key to emit radio waves that could interfere with the operation of the aircraft.

NOTICE

■ **To prevent key damage**

Observe the following:

- Do not drop the keys, subject them to strong shocks or bend them.
- Do not expose the keys to high temperatures for a long periods of time.
- Do not get the keys wet or wash them in an ultrasonic washer etc.
- Do not attach metallic or magnetic materials to the keys or place the keys close to such materials.
- Do not disassemble the keys.
- Do not attach a sticker or anything else to the surface of the electronic key.
- Do not place the keys near objects that produce magnetic fields, such as TVs, audio systems, glass top ranges, or medical electrical equipment, such as low-frequency therapy equipment.

■ **Carrying the electronic key on your person (vehicles with a smart key system)**

Carry the electronic key 3.9 in. (10 cm) or more away from electric appliances that are turned on.

■ **In case of a smart key system malfunction or other key-related problems (vehicles with a smart key system)**

Take your vehicle with all the electronic keys provided with your vehicle to your Toyota dealer.

■ **When a vehicle key is lost (vehicles with a smart key system)**

If the key remains lost, the risk of vehicle theft increases significantly. Visit your Toyota dealer immediately with all remaining electronic keys that were provided with your vehicle.

# Smart key system*

**The following operations can be performed simply by carrying the electronic key on your person, for example in your pocket.**
**(The driver should always carry the electronic key.)**

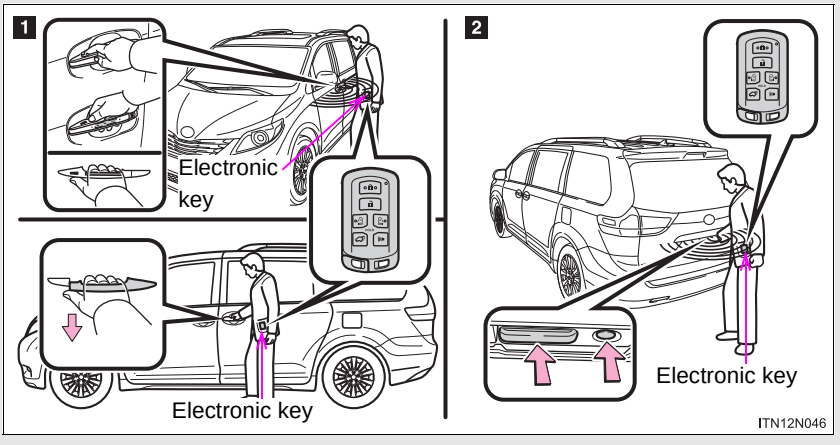


1 Locks and unlocks the doors (→P. 35)

2 Locks and unlocks the doors (→P. 35)

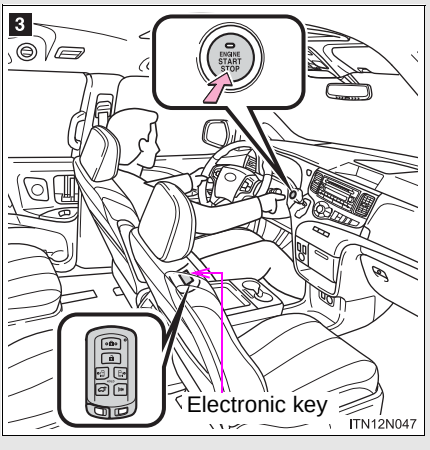


3 Starts and stops the engine (→P. 215)

*: If equipped

## Unlocking and locking the doors

### Front door handles

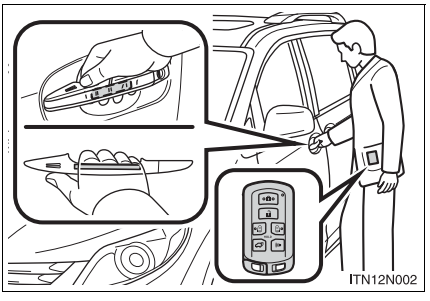


Grip the handle to unlock all the doors.

Make sure to touch the sensor on the back of the handle.

The doors cannot be unlocked for 3 seconds after the doors are locked.

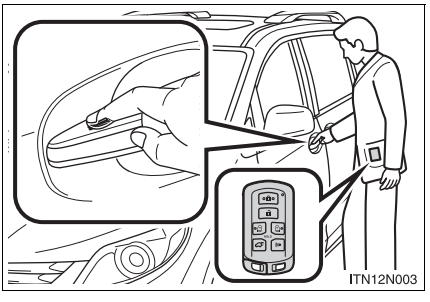


Touch the lock sensor (the indentation on the upper part of the door handle) to lock all the doors.

### Sliding door handles (vehicles with power sliding door)

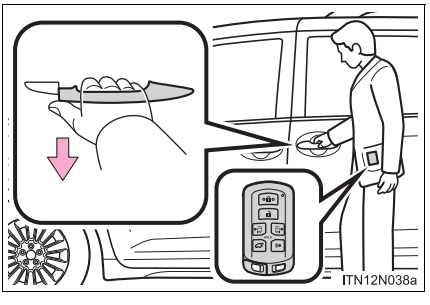


Pull the handle to unlock all the doors.

There is no touch type sensor in slide door handle. You must pull the handle to activate the operation.

### Back door

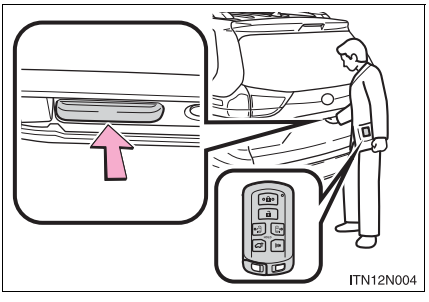


Press the unlock button to unlock all the doors.

The door cannot be unlocked for 3 seconds after the door is locked.

Lock the back door again when you leave the vehicle. The back door will not lock automatically after it has been opened and then closed.

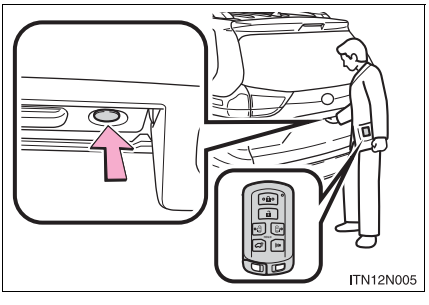


Press the lock button to lock all the doors.

## Antenna location and effective range

### Antenna location

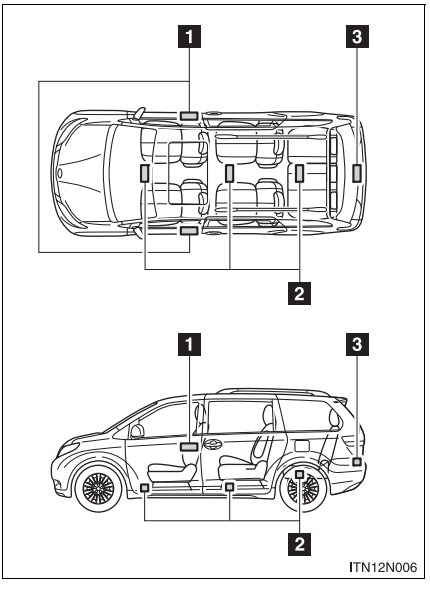


1 Antennas outside cabin

2 Antennas inside cabin

3 Antenna outside luggage compartment

## Effective range (areas within which the electronic key is detected)

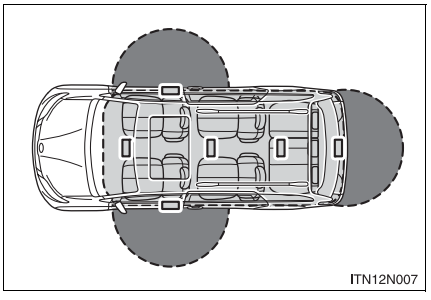


When locking or unlocking the doors

The system can be operated when the electronic key is within about 2.3 ft. (0.7 m) of either of the front outside door handles. (Only the doors detecting the key can be operated.)

When starting the engine or changing “ENGINE START STOP” switch modes

The system can be operated when the electronic key is inside the vehicle.

### Operation signals

A buzzer sounds and the emergency flashers flash to indicate that the doors have been locked/unlocked. (Locked: Once; Unlocked: Twice)

### When the door cannot be locked by the lock sensor on the upper part of the front door handle

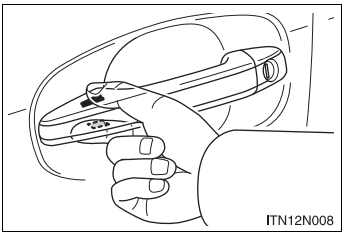


Touch both lock sensors on the upper and lower part of the front door handle simultaneously.

### Alarms and warning indicators

A combination of exterior and interior alarms as well as warnings shown on the multi-information display are used to prevent theft of the vehicle and unforeseeable accidents resulting from erroneous operation. Perform the appropriate correction procedure described in the following table.

| Alarm | Situation | Correction procedure |
|---|---|---|
| Interior alarm pings once and exterior alarm sounds once for 10 seconds | An attempt was made to lock the doors using the entry function while the electronic key was still inside the passenger compartment | Retrieve the electronic key from the passenger compartment and lock the doors again |
| | An attempt was made to exit the vehicle and lock the doors without first turning the “ENGINE START STOP” switch off | Turn the “ENGINE START STOP” switch off and lock the doors again |
| Exterior alarm sounds once for 10 seconds | An attempt was made to lock the vehicle while a door is open | Close all of the doors and lock the doors again |

| Alarm | Situation | Correction procedure |
|---|---|---|
| Interior alarm pings continuously*1 | The “ENGINE START STOP” switch was turned to ACCESSORY mode while the driver’s door was open (or the driver’s door was opened while the “ENGINE START STOP” switch was in ACCESSORY mode) | Turn the “ENGINE START STOP” switch OFF and close the driver’s door |
| Interior alarm sounds continuously*1 | When the “ENGINE START STOP” switch is in IGNITION ON or ACCESSORY mode, an attempt was made to open the door and exit the vehicle, and the shift lever was not in “P” | Shift the shift lever to “P” and turn the “ENGINE START STOP” switch OFF |
| Interior and exterior alarms sound continuously*1 | When the “ENGINE START STOP” switch is in IGNITION ON or ACCESSORY mode, the driver’s door was closed after the key was carried outside the vehicle, and the shift lever was not in “P” | Shift the shift lever to “P”, turn the “ENGINE START STOP” switch OFF and close the driver’s door again |

| Alarm | Situation | Correction procedure |
|---|---|---|
| Interior alarm pings once*1 | The electronic key has a low battery | Replace the electronic key battery |
| | An attempt was made to start the engine without the electronic key being present, or the electronic key was not functioning normally | Start the engine with the electronic key present*2 |
| Interior alarm pings once and exterior alarm sounds 3 times*1 | The driver's door was closed after the key was carried outside the vehicle, and the "ENGINE START STOP" switch was not turned off | Turn the "ENGINE START STOP" switch OFF and close the driver's door again |
| | An occupant carried the electronic key outside the vehicle and closed the door while the "ENGINE START STOP" switch was not off | Bring the electronic key back into the vehicle |

*1: A message will be shown on the multi-information display in the instrument cluster.

*2: If the engine does not start when the electronic key is inside the vehicle, the electronic key battery may be depleted or there may be difficulties receiving signal from the key. (→P. 645)

### ■ Security feature

If a door is not opened within approximately 60 seconds after the vehicle is unlocked, the security feature automatically locks the vehicle again.

### Switching the door unlock function

It is possible to set which doors the entry function unlocks using the wireless remote control.

STEP 1 Turn the “ENGINE START STOP” switch off.

STEP 2 When the indicator on the key surface is not on, press and hold , , (if equipped), (if equipped) or (if equipped) for about 5 seconds while pressing and holding .

The setting changes each time an operation is performed, as shown below. (When changing the setting continuously, release the buttons, wait for at least 5 seconds, and repeat STEP 2.)

| Multi-information display | Unlocking function | Beep |
|---|---|---|
| | Holding the driver’s door handle unlocks only the driver’s door and driver side power sliding door. | Exterior: Beeps three times<br>Interior: Pings once |
| | Holding the front passenger’s door handle or pulling either power sliding door handle unlocks all doors. | |
| | Holding either front door handle or pulling either power sliding door handle unlocks all doors. | Exterior: Beeps twice<br>Interior: Pings once |

STEP 3 For vehicles equipped with an alarm, unlock the doors using the wireless remote control and open one of the doors.
If a door is not opened within 60 seconds after is pressed, the doors will be locked again and the alarm will automatically be set.
In case that the alarm is triggered, immediately stop the alarm.
(→P. 154)

### ■ Battery-saving function

In the following circumstances, the entry function is disabled in order to prevent the vehicle battery from discharging and the electronic key battery from discharging.

- When the entry function has not been used for 5 days or more
- When the electronic key has been left within approximately 6 ft. (2 m) of the vehicle for 10 minutes or more
- If the entry function has not been used for 14 days or more, the vehicle cannot be unlocked by a door other than the driver's door. To unlock the vehicle, grip the driver's door handle or use the wireless remote control or the mechanical key.

The system will resume operation when...

- The vehicle is locked using the lock sensor when carrying the electronic key on your person.
- The vehicle is locked/unlocked using the wireless remote control. (→P. 52)
- The vehicle is locked/unlocked using the mechanical key. (→P. 717)

### Conditions affecting operation

The smart key system uses weak radio waves. In the following situations, the communication between the electronic key and the vehicle may be affected, preventing the smart key system and wireless remote control from operating properly. (Way of coping →P. 717)

- When the electronic key battery is depleted
- Near a TV tower, electric power plant, gas station, radio station, large display, airport or other facility that generates strong radio waves or electrical noise
- When carrying a portable radio, cellular phone, cordless phone or other wireless communication devices
- When the electronic key is in contact with, or is covered by the following objects
  - Cards to which aluminum foil is attached
  - Cigarette boxes that have aluminum foil inside
  - Metallic wallets or bags
  - Coins
  - Hand warmers made of metal
  - Media such as CDs and DVDs
- When multiple electronic keys are in the vicinity
- When another wireless key (that emits radio waves) is being used nearby
- When carrying or using the electronic key together with the following devices that emit radio waves
  - Another vehicle's electronic key
  - A wireless key that emits radio waves
  - Personal computers or personal digital assistants (PDAs)
  - Digital audio players
  - Portable game systems
- If window tint with a metallic content or metallic objects are attached to the rear window
- Vehicles with AUTO ACCESS SEAT: If the wireless remote control of the AUTO ACCESS SEAT is operated simultaneously, the AUTO ACCESS SEAT may not operate properly.
  For details, refer to "AUTO ACCESS SEAT OWNER'S MANUAL".

### ■Notes for the entry function

- Even when the electronic key is within the effective range (detection areas), the system may not operate properly in the following cases.
  - The electronic key is too close to the window or outside door handle, near the ground, or in a high place when the doors are locked or unlocked.
  - The electronic key is on the instrument panel, floor or in the glove box when the engine is started or “ENGINE START STOP” switch modes are changed.
- As long as the electronic key is within the effective range, the doors may be locked or unlocked by anyone. However, only the doors detecting the electronic key can be used to unlock the vehicle.
- The doors may unlock or lock if a large amount of water splashes on the door handle, such as in the rain or in a car wash when the electronic key is within the effective range. (The doors will automatically be locked after approximately 60 seconds if the doors are not opened and closed.)
- If the wireless remote control is used to lock the doors when the electronic key is near the vehicle, there is a possibility that the door may not be unlocked by the smart key system. (Use the wireless remote control to unlock the doors.)
- If power slide door is unable to operate due to prohibition by the power sliding door main switch, the door unlock and open operation will not be performed. (→P. 67)

### Note for locking the doors

- Touching the door lock sensor while wearing gloves may delay or prevent lock operation. Remove the gloves and touch the lock sensor again.
- When the lock operation is performed using the lock sensor, recognition signals will be shown up to two consecutive times. After this, no recognition signals will be given.
- If the door handle becomes wet while the electronic key is within the effective range, the door may lock and unlock repeatedly. Place the key in a position 6 ft. (2 m) or more separate from the vehicle while the vehicle is being washed. (Take care to ensure that the key is not stolen.)
- If the electronic key is inside the vehicle and a door handle becomes wet during a car wash, a message may be shown on the multi-information display and a buzzer will sound outside the vehicle. To turn off the alarm, lock all the doors.
- The lock sensor may not work properly if it comes into contact with ice, snow, mud, etc. Clean the lock sensor and attempt to operate it again, or use the lock sensor on the lower part of the door handle.
- Fingernails may scrape against the door during operation of the door handle. Be careful not to injure fingernails or damage the surface of the door.

### Notes for the unlocking function

- Gripping the front door handle when wearing a glove may not unlock or lock the door.
- A sudden approach to the effective range or door handle operation may prevent the doors from being unlocked. In this case, return the door handle to the original position and check that the doors have unlocked before pulling the door handle.
- If there is another electronic key in the detection area, it may take slightly longer to unlock the doors after one of the front door handles is gripped or one of sliding door handles is pulled.

### When the vehicle is not driven for extended periods

- To prevent theft of the vehicle, do not leave the electronic key within 6 ft. (2 m) of the vehicle.
- The smart key system can be deactivated in advance. (→P. 761)

### To operate the system properly

Make sure to carry the electronic key when operating the system. Do not get the electronic key too close to the vehicle when operating the system from outside of the vehicle.

Depending on the position and holding condition of the electronic key, the key may not be detected correctly and the system may not operate properly. (The alarm may go off accidentally, or the door lock prevention may not operate.)

### If the smart key system does not operate properly

- Locking and unlocking the doors: Use the mechanical key. (→P. 717)
- Starting the engine (→P. 717)

### Electronic key battery depletion

- The standard battery life is 1 to 2 years.
- If the battery becomes low, an alarm will sound in the cabin when the engine stops. (→P. 40)
- As the electronic key always transmits radio waves, the battery will become depleted even if the electronic key is not used. The following symptoms indicate that the electronic key battery may be depleted. Replace the battery when necessary. (→P. 645)
  - The smart key system or the wireless remote control does not operate.
  - The detection area becomes smaller.
  - The LED indicator on the key surface does not turn on.
- To avoid serious deterioration, do not leave the electronic key within 3 ft. (1 m) of the following electrical appliances that produce a magnetic field.
  - TVs
  - Personal computers
  - Recharging cellular phones or cordless phones
  - Cellular phones, cordless phones and battery chargers
  - Glass top ranges
  - Table lamps

### When the electronic key battery is fully depleted

→P. 645

### Customization that can be configured at Toyota dealer

Settings (e.g. smart key system) can be changed.
(Customizable features →P. 761)

## Certification for the smart key system

**U.S.A.**

FCC ID: HYQ14ADR FCC ID: HYQ14AEH
FCC ID: HYQ13CZM FCC ID: HYQ13CZN
FCC ID: NI4TMLF8-20

NOTE:
This device complies with part 15 of the FCC Rules. Operation is subject to the following two conditions: (1) This device may not cause harmful interference, and (2) this device must accept any interference received, including interference that may cause undesired operation.

FCC WARNING:
Changes or modifications not expressly approved by the party responsible for compliance could void the user's authority to operate the equipment.

**Canada**

NOTE:
Operation is subject to the following two conditions: (1) this device may not cause interference, and (2) this device must accept any interference, including interference that may cause undesired operation of the device.

CAUTION

■ **Caution regarding interference with electronic devices**

- People with implanted pacemakers or cardiac defibrillators should keep away from the smart key system antennas. (→P. 38)
  The radio waves may affect the operation of such devices. If necessary, the entry function can be disabled. Ask your Toyota dealer for details, such as the frequency of radio waves and timing of emitting the radio waves. Then, consult your doctor to see if you should disable the entry function.
- Users of any electrical medical device other than implanted pacemakers and implanted cardiac defibrillators should consult the manufacturer of the device for information about its operation under the influence of radio waves. Radio waves could have unexpected effects on the operation of such medical devices.

Ask your Toyota dealer for details for disabling the entry function.

# Wireless remote control

**The wireless remote control can be used to lock and unlock the vehicle.**

## Vehicles without a smart key system (type A)

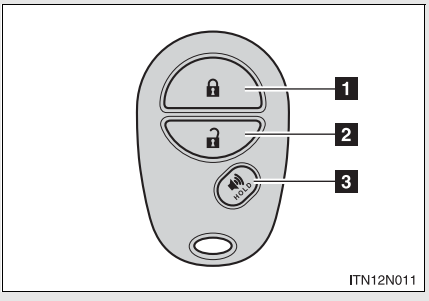


1 Locks all doors

2 Unlocks all doors

Pressing the button unlocks the driver's side doors. Pressing the button again within 3 seconds unlocks the other doors.

3 Sounds the alarm (press and hold)*

*: If equipped

### Vehicles without a smart key system (type B)

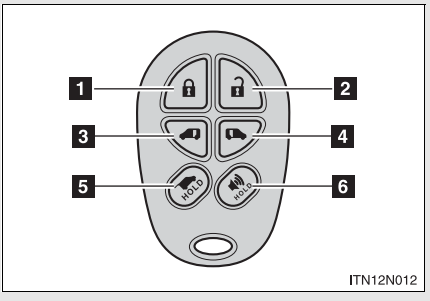


1 Locks all doors

2 Unlocks all doors

Pressing the button unlocks the driver's side doors. Pressing the button again within 3 seconds unlocks the other doors.

3 Opens and closes the left side power sliding door (press and hold)

4 Opens and closes the right side power sliding door (press and hold)

5 Opens and closes the power back door (press and hold)*

6 Sounds alarm (press and hold)*

*: If equipped

### Vehicles with a smart key system

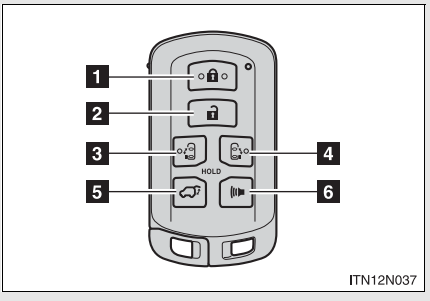


1 Locks all doors

2 Unlocks all doors

Pressing the button unlocks the driver's side doors. Pressing the button again within 3 seconds unlocks the other doors.

3 Opens and closes the left side power sliding door (press and hold)

4 Opens and closes the right side power sliding door (press and hold)

5 Opens and closes the power back door (press and hold)

6 Sounds alarm (press and hold)

### Operation signals

Doors: A buzzer sounds and the emergency flashers flash to indicate that the doors have been locked/unlocked. (Locked: Once; Unlocked: Twice)

Back door: A buzzer sounds and the emergency flashers flash twice to indicate that the back door has been opened/closed.

### Door lock buzzer

If an attempt to lock the doors (except for power sliding doors or power back door) is made when a door is not fully closed, a buzzer sounds continuously. Fully close the door to stop the buzzer, and lock the vehicle once more.

### Panic mode

**Vehicles without a smart key system**

When is pressed for longer than about one second, an alarm will sound intermittently and the vehicle lights will flash to deter any person from trying to break into or damage your vehicle.

To stop the alarm, press any button on the wireless remote control.

**Vehicles with a smart key system**

When is pressed for longer than about one second, an alarm will sound intermittently and the vehicle lights will flash to deter any person from trying to break into or damage your vehicle.

To stop the alarm, press any button on the electronic key.

### Security feature

If a door is not opened within approximately 60 seconds after the vehicle is unlocked, the security feature automatically locks the vehicle again.

### Power sliding door operation (vehicles with power sliding door)

Even if the door is locked, pressing and holding the sliding door buttons will unlock all doors and start open operation.

### Alarm (if equipped)

Using the wireless remote control to lock the doors will set the alarm system. (→P. 154)

### Reversing the operation of the power sliding door and power back door (if equipped)

Pressing the wireless remote control switch again while the door is operating will cause the operation to reverse. However, the reverse operation cannot be performed for the first second after automatic operation starts, even if the wireless remote control switch is pressed again.

### ■ Conditions affecting operation

**Vehicles without a smart key system**

The wireless remote control function may not operate normally in the following situations:

- Near a TV tower, radio station, electric power plant, airport or other facility that generates strong radio waves
- When carrying a portable radio, cellular phone or other wireless communication devices
- When multiple wireless keys are in the vicinity
- When the wireless key is in contact with, or is covered by, a metallic object
- When a wireless key (that emits radio waves) is being used nearby
- When the wireless key has been left near an electrical appliance such as a personal computer
- If window tint with a metallic content or metallic objects is attached to the rear window
- Vehicles with AUTO ACCESS SEAT: If the wireless remote control of the AUTO ACCESS SEAT is operated simultaneously, the AUTO ACCESS SEAT may not operate properly.
  For details, refer to “AUTO ACCESS SEAT OWNER’S MANUAL”.

**Vehicles with a smart key system**

→P. 45

### ■ If the wireless remote control does not operate properly (vehicles with a smart key system)

Locking and unlocking the doors: Use the mechanical key. (→P. 717)

### ■ Key battery depletion

**Vehicles without a smart key system**

If the wireless remote control function does not operate, the battery may be depleted. Replace the battery when necessary. (→P. 645)

**Vehicles with a smart key system**

→P. 49

### ■ When the electronic key battery is fully depleted

→P. 645

### ■ Customization that can be configured at Toyota dealer

Settings (e.g. operation signal) can be changed.
(Customizable features →P. 761)

### ■ Certification for wireless remote control (vehicles without a smart key system)

This device complies with Part 15 of the FCC Rules and with RSS-210 of Industry Canada. Operation is subject to the following two conditions: (1) this device may not cause harmful interference, and (2) this device must accept any interference received, including interference that may cause undesired operation.

### ■ Certification for wireless remote control (vehicles with a smart key system)

**U.S.A.**

FCC ID: HYQ14ADR FCC ID: HYQ14AEH
FCC ID: HYQ13CZM FCC ID: HYQ13CZN
FCC ID: NI4TMLF8-20

NOTE:
This device complies with part 15 of the FCC Rules. Operation is subject to the following two conditions: (1) This device may not cause harmful interference, and (2) this device must accept any interference received, including interference that may cause undesired operation.

FCC WARNING:
Changes or modifications not expressly approved by the party responsible for compliance could void the user's authority to operate the equipment.

**Canada**

NOTE:
Operation is subject to the following two conditions: (1) this device may not cause interference, and (2) this device must accept any interference, including interference that may cause undesired operation of the device.

# Front doors

**The vehicle can be locked and unlocked using the entry function, wireless remote control, key or door lock switch.**

## ■ Entry function (if equipped)

→P. 35

## ■ Wireless remote control

→P. 52

## ■ Key

Turning the key operates the doors as follows:

**Vehicles without a smart key system**

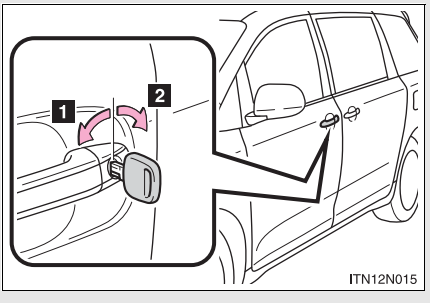


1 Locks all the doors

2 Unlocks all the doors

Turning the key unlocks the driver's side doors. Turning the key again within 3 seconds unlocks the other doors.

**Vehicles with a smart key system**

The doors can also be locked and unlocked with the mechanical key. (→P. 717)

## Door lock switch

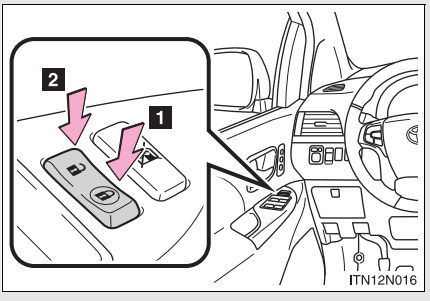


1 Locks all the doors

2 Unlocks all the doors

## Inside lock button

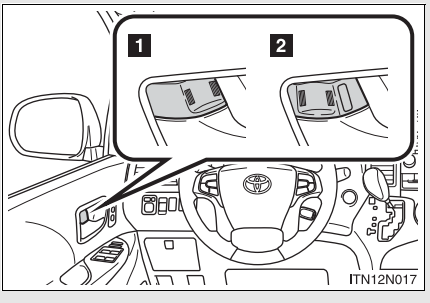


1 Locks the door

2 Unlocks the door

The front doors can be opened by pulling the inside handle even if the lock buttons are in the lock position.

## Locking the front doors from the outside without a key

STEP 1 Move the inside lock button to the lock position.

STEP 2 Close the door.

**Vehicles without a smart key system**

The doors cannot be locked if either of the front doors is open and the key is in the engine switch.

**Vehicles with a smart key system**

The door cannot be locked if the “ENGINE START STOP” switch is in ACCESSORY or IGNITION ON mode, or the electronic key is left inside the vehicle.

The key may not be detected correctly and the door may be locked.

## Automatic door locking and unlocking systems

The following functions can be set or cancelled:

| Function | Operation |
|---|---|
| Shift position linked door locking function | Shifting the shift lever out of P locks all the doors. |
| Shift position linked door unlocking function | Shifting the shift lever to P unlocks all the doors. |
| Speed linked door locking function | All the doors are locked when the vehicle speed is approximately 12 mph (20 km/h) or higher. |
| Driver's door linked door unlocking function (vehicles without a smart key system) | All the doors are unlocked when the driver's door is opened within 10 seconds after turning the engine switch to "ACC" or "LOCK". |
| Driver's door linked door unlocking function (vehicles with a smart key system) | All the doors are unlocked when the driver's door is opened within 10 seconds after turning the "ENGINE START STOP" switch off. |

## ■ Setting and canceling the functions

To switch between set and canceled, follow the procedure below:

STEP 1 **Vehicles without a smart key system**

Close all the doors and turn the engine switch to the “ON” position. (Perform step 2 within 10 seconds.)

**Vehicles with a smart key system**

Close all the doors and turn the “ENGINE START STOP” switch to IGNITION ON mode. (Perform step 2 within 10 seconds.)

STEP 2

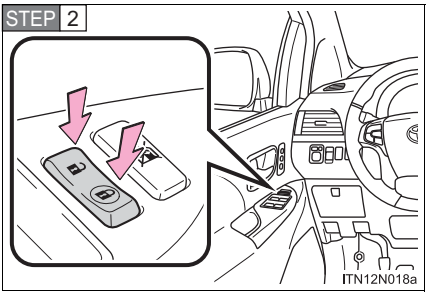


Shift the shift lever to P or N, and press and hold the door lock switch ( or ) for approximately 5 seconds and then release.

The shift lever and switch positions corresponding to the desired function to be set are shown in the following table.

Use the same procedure to cancel the function.

| Function | Shift lever position | Door lock switch position |
|---|---|---|
| Shift position linked door locking function | P | |
| Shift position linked door unlocking function | | |
| Speed linked door locking function | N | |
| Driver’s door linked door unlocking function | | |

When the setting or canceling operation is complete, all doors are locked and then unlocked.

### When all the doors are locked with the wireless remote control or key

The doors cannot be unlocked with the door lock switch.
The door lock switch can be reset by unlocking all the doors with the wireless remote control or key.

### Using the mechanical key (vehicles with a smart key system)

The doors can also be locked and unlocked with the mechanical key.
(→P. 717)

### Customization that can be configured at Toyota dealer

Settings (e.g. unlocking function using a key) can be changed.
(Customizable features: →P. 761)

**CAUTION**

### To prevent an accident

Observe the following precautions while driving the vehicle.
Failing to do so may result in a door opening and an occupant falling out, resulting in death or serious injury.

- Always use a seat belt.
- Always lock all the doors.
- Ensure that all doors are properly closed.
- Do not pull the inside handle of the doors while driving.
  The doors may be opened and the passengers could be thrown out of the vehicle which may result in serious injury or death.

  Be especially careful for the front doors, as the doors may be opened even if the inside lock buttons are in the locked position.

### Vehicles without power sliding doors

**The sliding doors can be opened and closed using the sliding door handle. The sliding door can be locked and unlocked using the wireless remote control, door lock switch or inside lock knob.**

### Vehicles with power sliding doors

**The power sliding doors can be opened and closed using the sliding door handle, power sliding door switches or wireless remote control. The power sliding doors can be locked and unlocked using the wireless remote control, door lock switch or inside lock knob.**

## ■ Wireless remote control

→P. 52

## ■ Door lock switch

→P. 60

## ■ Sliding door handle

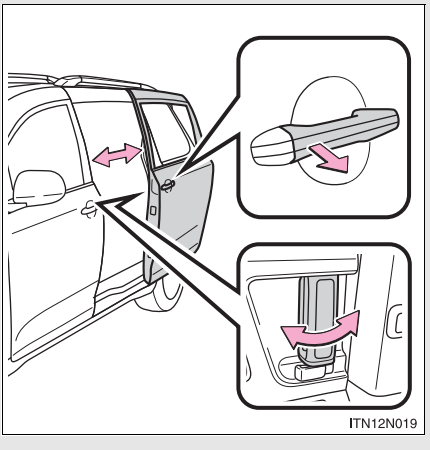


Open/close

Vehicles with power sliding doors: The sliding door will be automatically and completely opened and closed by the following.

- Pulling the outside handle.
- Sliding the inside handle forward to close or backward to open.

## Inside lock knobs

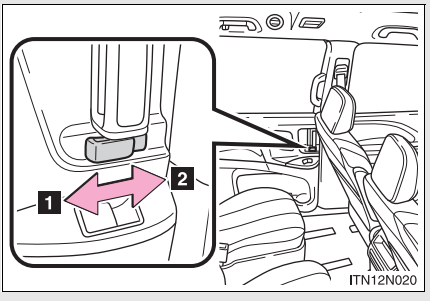


1 Unlocks

2 Locks

## Power sliding door switches (vehicles with power sliding doors)

### From front seats

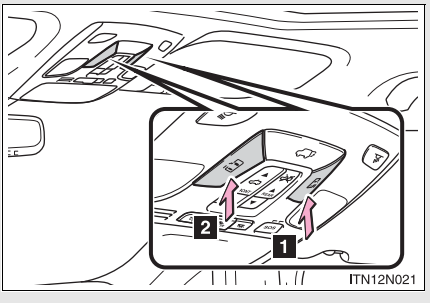


Press the switch to open and close the following door.

1 The right side sliding door

2 The left side sliding door

Pressing the switch again while the door is operating will cause the operation to reverse. However, the reverse operation cannot be performed for the first second after automatic operation starts, even if the switch is pressed again.

### From second seats

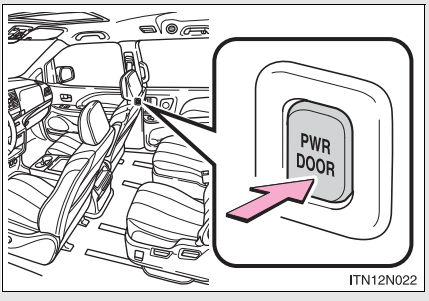


Press the switch to open and close each sliding door.

Pressing the switch again while the door is operating will cause the operation to reverse. However, the reverse operation cannot be performed for the first second after automatic operation starts, even if the switch is pressed again.

## Canceling the power sliding door system (vehicles with power sliding doors)

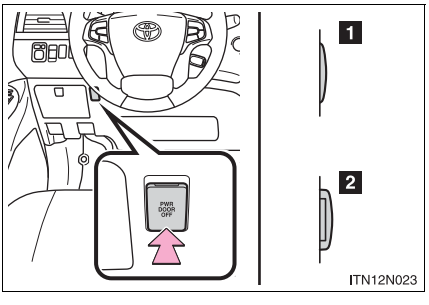


Turn the main switch off to disable the power sliding door system.

**1** Off

The sliding doors can only be opened and closed manually.

**2** On*

The power sliding door can be opened and closed with the power sliding door switches for the front occupants or wireless remote control even if the sliding door child-protectors are locked.

*: Orange mark on the switch should be visible when the switch is on.

## Locking the sliding doors from the outside without the wireless remote control

STEP 1 Move the inside lock knob to the lock position.

STEP 2 Close the sliding door.

## Sliding door child-protector locks

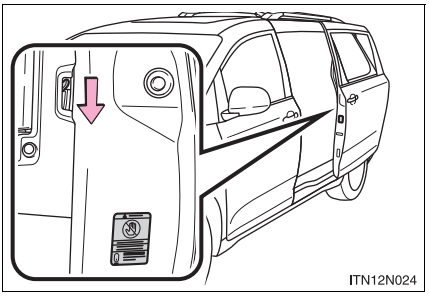


The sliding door cannot be opened by the inside door handle and the second seat sliding door switch when the lock is set.

These locks can be set to prevent children from opening the sliding doors. Push down on each sliding door switch to lock that sliding door.

■ **The power sliding door can be operated when (vehicles with power sliding doors)**

- Open operation: The shift lever is in P.
  Close operation: The vehicle is stopped.
- The power sliding door system main switch is on.
- The power sliding door is unlocked. (Except for the wireless remote control operation or smart key system operation.)
- The sliding door child-protector lock is not set. (However, the switch for the front occupants and the outside handle still operate the power sliding door.)

■ **Power sliding doors**

- If the power sliding door outside handle is pulled while the power sliding door is opening or closing, the door will reverse the operation direction.
- During opening operation:
  Stroking the power sliding door handle forward will reverse the direction and start closing.
  Stroking the handle backward will continue opening.
  During closing operation:
  Stroking the power sliding door handle backward will reverse the direction and start opening.
  Stroking the handle forward will continue closing.
- The power sliding doors can be opened/closed manually when the power sliding door function is canceled with the main switch.
- Vehicles without a smart key system: A buzzer sounds if you put the shift lever out of P with the engine switch in the “ON” position and the sliding door not completely closed.
  Vehicles with a smart key system: A buzzer sounds if you put the shift lever out of P with the “ENGINE START STOP” switch in IGNITION ON mode and the sliding door not completely closed.
- Vehicles with AUTO ACCESS SEAT: If the AUTO ACCESS SEAT has not been locked in place after being stowed, the right-hand sliding door will not close and a beep will sound twice.
  For details, refer to “AUTO ACCESS SEAT OWNER’S MANUAL”.

### ■The situations in which the sliding door does not open completely

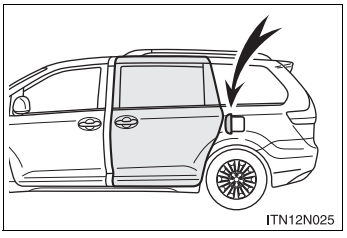


The left side sliding door does not open completely when the fuel filler door is opened.

### ■Jam protection function (vehicles with power sliding doors)

- If anything obstructs the power sliding door while it is closing or opening, the power sliding door will automatically operate in the opposite direction.
- If the jam protection function operates during two consecutive opening and closing operations, the power sliding door will be stopped at that position and the power sliding door system will be canceled.

### ■Power sliding door brake function (vehicles with power sliding doors)

When the power sliding door detects an abnormality and stops operating, power sliding door brake function may be activated. When brake function is activated, door movement is restricted by the brake and motion may appear to be not smooth. This is not malfunction. Move the door to fully closed position to reset the system and normal power sliding door function will resume.

### ■Sliding door closer (vehicles with power sliding doors)

In the event that the sliding door is left slightly open, the sliding door closer will automatically close it to the fully closed position.

### ■ If the power sliding door is inoperative (vehicles with power sliding doors)

When the power sliding door detects an abnormality and stops opening and can not be completely closed manually, cancel the function as follows and close the door manually.
After that, have the vehicle inspected and repaired by your Toyota dealer.

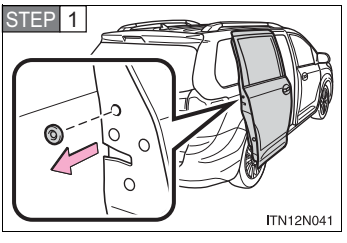


Remove the plug from the rear edge of the sliding door.

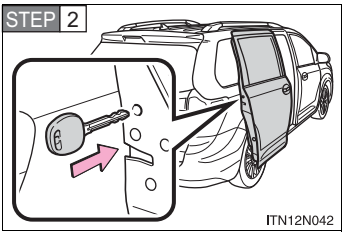


Insert a key in the hole and push the mechanical cancel lever.

### ■ When the battery is disconnected (vehicles with power sliding doors)

The power sliding door system must be initialized in order to ensure proper operation. To initialize it, close the sliding doors completely by hand.

### ■ Customization that can be configured at Toyota dealer

Settings (e.g. opening and closing operation) can be changed.
(Customizable features: →P. 761)

CAUTION

**While driving**

Observe the following precautions while driving.
Failure to do so may cause a door to open unexpectedly and an occupant to fall out of the vehicle, resulting in death or serious injury.

- Always use a seat belt.
- Always lock the doors.
- Ensure that all doors are properly closed.
- Do not operate the inside handle of the doors while driving.
- Set the sliding door child-protector locks when children are seated in the vehicle.

**When children are in the vehicle**

Observe the following precautions.
Failure to do so may result in death or serious injury.

- Do not leave children alone in the vehicle.
  If a child is accidentally locked in the vehicle, they could suffer heat exhaustion.
- Do not allow a child to open or close the sliding door.
  Doing so may cause the sliding door to operate unexpectedly, or cause the child's hands, head, or neck to be caught by the moving sliding door.

CAUTION

■**Operating the sliding doors**

Observe the following precautions.
Failure to do so may cause parts of the body to be caught, resulting in serious injury.

- When opening or closing a sliding door, thoroughly check to make sure the surrounding area is safe.
- When opening or closing the sliding doors with windows open, keep all body parts clear of the windows.
- If anyone is in the vicinity, make sure they are clear of the door path and let them know that the sliding door is about to open or close.
- Do not leave the sliding door at half-opened position because the sliding door is not latched at this position. If the vehicle is stopped on a downward slope, the sliding door may move and cause an unexpected injury.

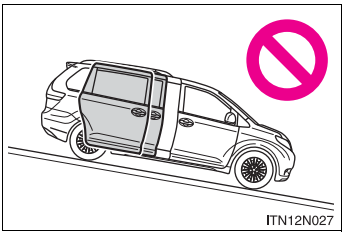


- When the vehicle is stopped on a slope, the door will slide faster when opening or closing, so be especially careful that the passengers do not get hit or pinched by the door.
- When stopping on a downward slope, open the door fully while passengers are getting in or out. Do not pull the outside handle or inside handle while the door is open as the door could suddenly close by itself causing injury.

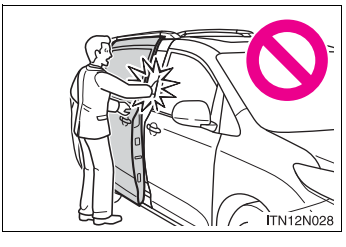


- When closing the sliding door, take extra care to prevent your fingers etc. from being caught.

CAUTION

■ **Sliding door closer (if equipped)**

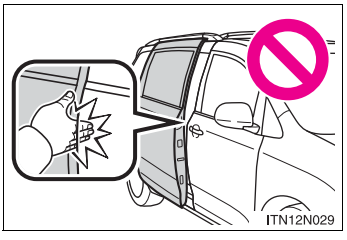


- In the event that the sliding door is left slightly open, the sliding door closer will automatically close it to the fully closed position. It takes several seconds before the sliding door closer begins to operate. Be careful not to catch fingers or anything else in the sliding door, as this may cause bone fractures or other serious injuries.
- Use caution when using the sliding door closer. The sliding door closer operates even when the power sliding door system is canceled.

■ **Power sliding doors**

Observe the following precautions when the power sliding door system is on. Failure to do so may cause serious injury.

- When using the door handle to open or close the power slide door, remove your hand from the door handle immediately after starting power sliding door operation. If you leave your hand on the door handle during operation, your hand, fingers, wrist etc. may be subjected to an excessive amount of force.
- Check the safety of the surrounding area to make sure there are no obstacles or anything that could cause any of your belongings to get caught.
- If anyone is in the vicinity, make sure they are clear of the door path and let them know that the sliding door is about to open or close.
- If the power sliding door main switch is turned off during automatic operation, the sliding door will stop opening or closing. Take extra care when on an incline, as the sliding door may open or close suddenly.
- On an incline, a sliding door may close by itself after it opens automatically. Make sure the sliding door is fully open and secure.

**CAUTION**

- In the following situations, the power sliding door may detect an abnormality and automatic operation may be stopped. In this case, the sliding door has to be operated manually. Take extra care in this situation, as the stopped sliding door may suddenly move, causing an accident.
  - When the sliding door contacts an obstacle
  - Vehicles without a smart key system:
    When the battery voltage suddenly drops, such as when the engine switch is turned to the “ON” position or the engine is started during automatic operation
    Vehicles with a smart key system:
    When the battery voltage suddenly drops, such as when the “ENGINE START STOP” switch is turned to IGNITION ON mode or the engine is started during automatic operation
- Do not attach any accessories other than genuine Toyota parts to the power sliding door. The power sliding door may not operate, causing itself to malfunction, or the power sliding door may close again after it is opened.
- In cases such as when replacing tires, make sure to turn off the power sliding door main switch. Failure to do so may cause the sliding door to operate unintentionally if the power sliding door switch is accidentally touched, resulting in hands and fingers being caught and injured.
- When the child-protector locks are set, make sure to turn off the power sliding door system with the main switch in order to totally disable the system.

CAUTION

**■ Jam protection function (vehicles with power sliding doors)**

Observe the following precautions.
Failure to do so may cause serious injury.

- Never use any part of your body to intentionally activate the jam protection function.
- The jam protection function may not work if something gets caught just before the power sliding door fully closes. Be careful not to catch fingers or anything else.
- The jam protection function may not work depending on the shape of the object that is caught. Be careful not to catch fingers or anything else.

NOTICE

**■ To prevent damage to your vehicle**

- Vehicles with the power sliding door:
  - Do not apply excessive force when the sliding door is operating.
  - Do not place your hand or foot near door hinges or rollers when the sliding door is operating.
  - Avoid forcibly opening the left side sliding door fully when the fuel filler door is opened. Otherwise, the fuel filler door may be damaged.
  - Take care not to damage the sensors (installed on the front edge of the power sliding door) with a knife or other sharp object.
- Make sure there is nothing in the doorway before closing.
- Do not close the sliding door by applying the brakes. Doing so could cause the sliding door to be damaged.

**The back door can be locked and unlocked using the entry function (vehicles with a smart key system), wireless remote control or door lock switch.**
**The back door can be opened using the back door opener.**
**In addition, the power back door can be opened/closed using the power back door switch or wireless remote control.**

## ■ Locking and unlocking the back door

**Entry function (vehicles with a smart key system)**

→P. 35

**Wireless remote control**

→P. 52

**Door lock switch**

→P. 60

## ■ Opening the back door from outside the vehicle

**Back door opener**

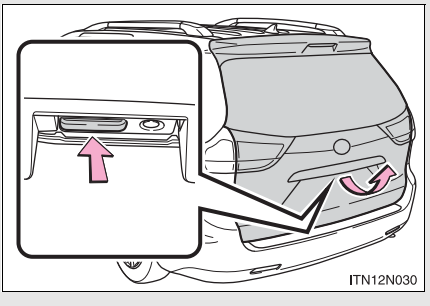


Raise the back door while pressing the back door opener to release the lock to open the back door.

**Wireless remote control (vehicles with power back door)**

→P. 52

### ■ Opening the back door from inside the vehicle (vehicles with a power back door)

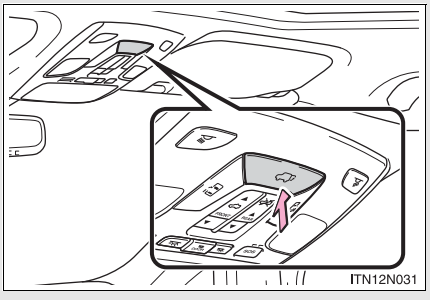


Press and hold the switch to open/close the back door.

Pressing the switch again while the power back door is operating will cause the operation to reverse.

However, the reverse operation cannot be performed for the first second after automatic operation starts even if the switch is pressed again.

As the power back door starts to open or close automatically, two beeps sound and the emergency flashers flash twice.

## Back door closer (if equipped)

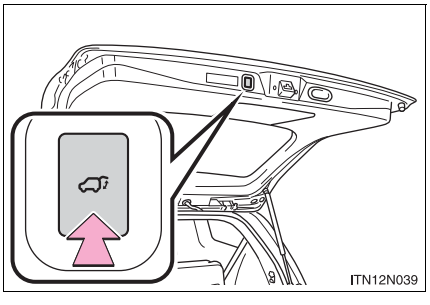


Press the switch to close the back door.

Pressing the switch again while the power back door is closing will cause it to open again.

However, the reverse operation cannot be performed for the first second after automatic operation starts even if the switch is pressed again.

A buzzer sounds twice and the emergency flashers flash twice to indicate that the back door is opening/closing.

## Canceling the power back door system (vehicles with power back door)

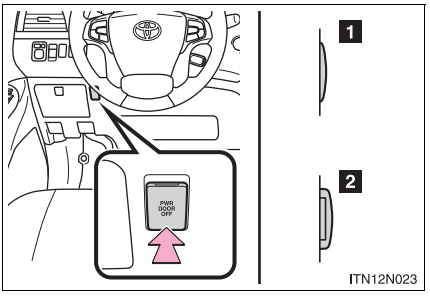


Turn the main switch off to disable the power back door system.

1 Off

2 On*

*: Orange mark on the switch should be visible when the switch is on.

### ■When closing the back door using the back door handle

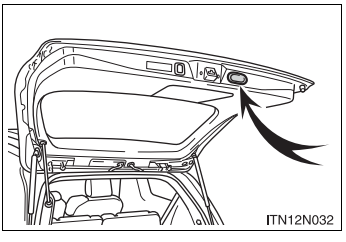


Lower the back door using the back door handle, and make sure to push the back door down from the outside to close it.

### ■Luggage compartment light

The luggage compartment light turns on when the back door is opened with the luggage compartment light switch on.

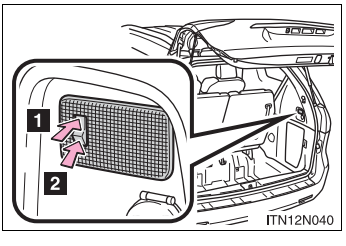


1 On

2 Off

## ■ If the back door opener is inoperative

The back door can be operated from the inside.

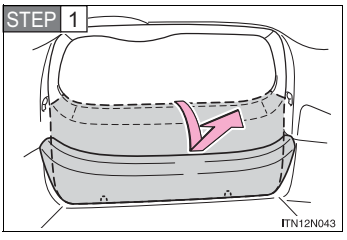


Remove the inside panel.

STEP 2 Move the lever.

**Vehicles without power back door**

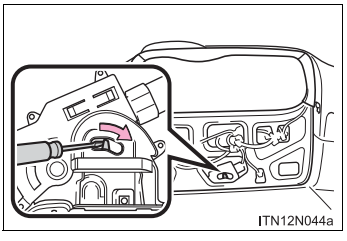


**Vehicles with power back door**

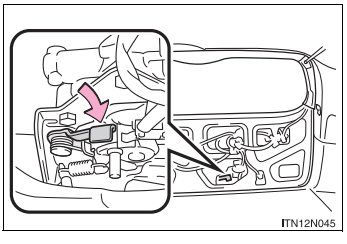

■ **The power back door can be operated when**

- The shift lever is in P.
- The back door is unlocked.

■ **Jam protection function (vehicles with power back door)**

- If anything obstructs the power back door while it is closing or opening, the back door will automatically operate in the opposite direction.
- If the jam protection function operates during two consecutive closing operations, the back door will be stopped at that position.

■ **Back door closer (vehicles with power back door)**

In the event that the back door is left slightly open, the back door closer will automatically close it to the fully closed position.

■ **When the battery is disconnected**

- The back door will be automatically locked after the battery is reconnected.
- The power back door (if equipped) must be initialized in order to ensure proper operation.

STEP 1 Unlock the back door with the wireless remote control or door lock switch.

STEP 2 Close the back door completely by hand.

CAUTION

■ **While driving**

- Keep the back door closed while driving.
  If the back door is left open, it may hit near-by objects while driving or luggage may be unexpectedly thrown out, causing an accident.
  In addition, exhaust gases may enter the vehicle, causing death or a serious health hazard. Make sure to close the back door before driving.
- Before driving the vehicle, make sure that the back door is fully closed. If the back door is not fully closed, it may open unexpectedly while driving, causing a passenger to be thrown out of the vehicle.
- Never let anyone sit in the luggage compartment. In the event of sudden braking or a collision, they are susceptible to death or serious injury.

■ **When children are in the vehicle**

Observe the following precautions.
Failure to do so may result in death or serious injury.

- Do not leave children alone in the luggage compartment.
  If a child is accidentally locked in the luggage compartment, they could suffer heat exhaustion.
- Do not allow a child to open or close the back door.
  Doing so may cause the back door to operate unexpectedly, or cause the child's hands, head, or neck to be caught by the closing back door.

CAUTION

■ **Operating the back door**

Observe the following precautions.
Failure to do so may cause parts of the body to be caught, resulting in serious injury.

- Remove any heavy loads, such as snow and ice, from the back door before opening it. Failure to do so may cause the back door to fall closed again after it is opened.
- When opening or closing the back door, thoroughly check to make sure the surrounding area is safe.
- If anyone is in the vicinity, make sure they are safe and let them know that the back door is about to open or close.
- Use caution when opening or closing the back door in windy weather as it may move abruptly in strong wind.

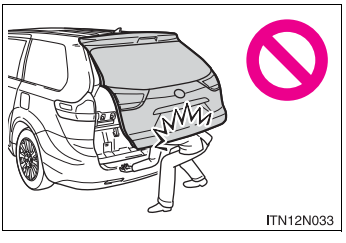


- The back door may fall if it is not opened fully. It is more difficult to open or close the back door on an incline than on a level surface, so beware of the back door unexpectedly opening or closing by itself. Make sure that the back door is fully open and secure before using the luggage compartment.

**CAUTION**

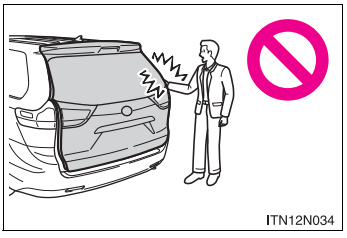


- When closing the back door, take extra care to prevent your fingers etc. from being caught.
- When closing the back door, make sure to press it lightly on its outer surface. If the back door handle is used to fully close the back door, it may result in hands or arms being caught.

- Do not place your hands on the back door damper stay to close the back door, and do not hang on the back door damper stay.
  Doing so may cause hands to be caught or the back door damper stay to break, causing an accident.
- Do not attach any accessories other than genuine Toyota parts to the back door. Such additional weight on the back door may cause the back door to fall closed again after it is opened.

CAUTION

■ **Back door closer (if equipped)**

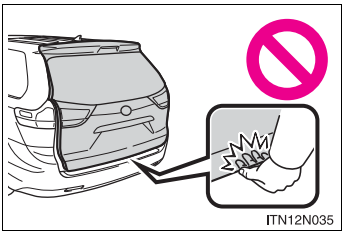


- In the event that the back door is left slightly open, the back door closer will automatically close it to the fully closed position. It takes several seconds before the back door closer begins to operate. Be careful not to catch fingers or anything else in the back door, as this may cause bone fractures or other serious injuries.
- Use caution when using the back door closer as it still operates when the power back door system is canceled.

■ **Power back door (if equipped)**

Observe the following precautions when operating the power back door. Failure to do so may cause serious injury.

- Check the safety of the surrounding area to make sure there are no obstacles or anything that could cause any of your belongings to get caught.
- If anyone is in the vicinity, make sure they are safe and let them know that the back door is about to open or close.
- If the operating conditions of the power back door are no longer met, a buzzer may sound and the back door may stop opening or closing. The back door then has to be operated manually. Take extra care in this situation, as the back door may move abruptly.
- On an incline, the back door may fall after it opens automatically. Make sure the back door is fully open and secure.

**CAUTION**

- In the following situations, the power back door may detect an abnormality and automatic operation may be stopped. In this case, the back door has to be operated manually. Take extra care in this situation, as the stopped back door may suddenly fall, causing an accident.
  - When the back door contacts an obstacle
  - Vehicles without a smart key system:
    When the battery voltage suddenly drops, such as when the engine switch is turned to the “ON” position or the engine is started during automatic operation
    Vehicles with a smart key system:
    When the battery voltage suddenly drops, such as when the “ENGINE START STOP” switch is turned to the IGNITION ON mode or the engine is started during automatic operation
- Do not attach any accessories other than genuine Toyota parts to the back door. The power back door may not operate, causing itself to malfunction, or the back door may fall closed again after it is opened.
- In cases such as when replacing tires, make sure to turn off the power back door main switch. Failure to do so may cause the back door to operate unintentionally if the power back door switch is accidentally touched, resulting in hands and fingers being caught and injured.

CAUTION

**■ Jam protection function (vehicles with power back door)**

Observe the following precautions.
Failure to do so may cause serious injury.

- Although the back door stops closing when the jam protection function detects an object, take extra care as you may still be injured if part of your body is already caught.
- Never use any part of your body to intentionally activate the jam protection function.
- The jam protection function may not work if something gets caught just before the back door fully closes. Be careful not to catch fingers or anything else.
- The jam protection function may not work depending on the shape of the object that is caught. Be careful not to catch fingers or anything else.

NOTICE

**■ To prevent damage to the power back door**

- Make sure that there is no ice between the back door and frame that would prevent movement of the back door. Operating the power back door when excessive load is present on the back door may cause a malfunction.
- Do not apply excessive force to the back door while the power back door is operating.
- Take care not to damage the sensors (installed on the right and left edges of the power back door) with a knife or other sharp object. If the sensor is disconnected, the power back door will not operate in automatic operation.

NOTICE

**Back door damper stays**

The back door is equipped with damper stays that hold the back door in place.

Observe the following precautions.
Failure to do so may cause damage to the back door damper stay, resulting in malfunction.

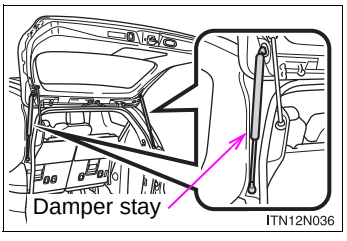


- Do not attach any foreign objects, such as stickers, plastic sheets, or adhesives to the damper stay rod.
- Do not touch the damper stay rod with gloves or other fabric items.
- Do not attach any accessories other than genuine Toyota parts to the back door.
- Do not place your hand on the damper stay or apply lateral forces to it.

**To prevent back door closer malfunction**

Do not apply excessive force to the back door while the back door closer is operating.

# Front seats

## Manual seat

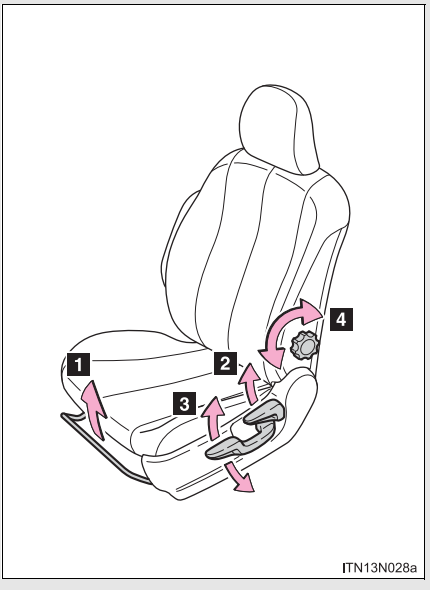


1 Seat position adjustment lever

2 Seatback angle adjustment lever

3 Vertical height adjustment lever (driver's side only)

4 Lumbar support adjustment knob (driver's side only)

## Power seat

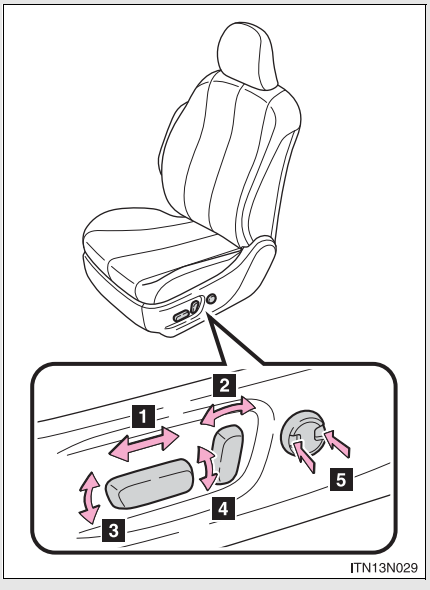


1. Seat position adjustment switch
2. Seatback angle adjustment switch
3. Seat cushion (front) angle adjustment switch (driver's side only)
4. Vertical height adjustment switch (driver's side only)
5. Lumbar support adjustment switch (driver's side only)

## Power easy access system (vehicles with driving position memory)

When the driver enters and exits the vehicle, the driver's seat will automatically perform the following operations:

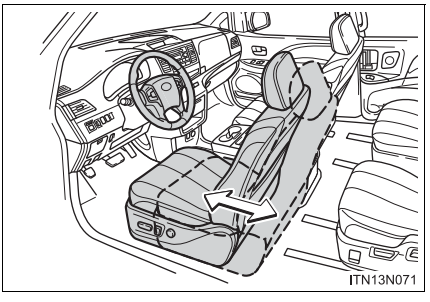


Exiting the vehicle: When all of the following actions have been performed, the seat will move backward (auto away function):

- The shift lever has been shifted to P
- Vehicles without a smart key system: The engine switch has been turned off.
  Vehicles with a smart key system: The "ENGINE START STOP" switch has been turned off.
- The driver seat belt has been unfastened

Entering the vehicle: When either of the following actions has been performed, the seat will move forward (auto return function):

- Vehicles without a smart key system: The engine switch has been turned to the “ACC” position.
  Vehicles with a smart key system: The “ENGINE START STOP” switch has been turned to ACCESSORY mode.
- The driver seat belt has been fastened

## Active head restraints

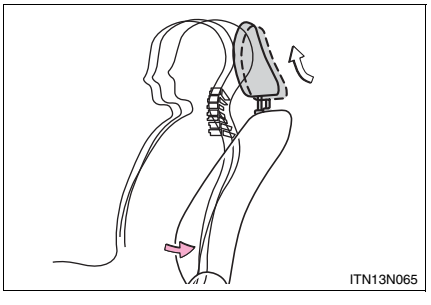


When the occupant’s lower back presses against the seatback during a rear-end collision, the head restraint moves slightly forward and upward to help reduce the risk of whiplash on the seat occupant.

### ■ The auto away function for exiting the driver seat (vehicles with driving position memory)

If the seat is already close to the rearmost position, the auto away function may not operate when the driver exits the vehicle.

### Active head restraints

Even small forces applied to the seatback may cause the head restraint to move. When a locked head restraint is pushed up forcibly, the head restraint inner structure may appear. This does not indicate a problem.

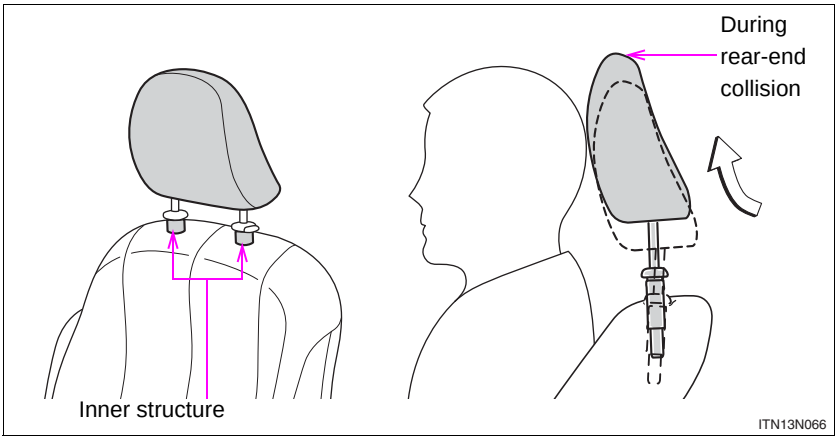


**CAUTION**

### Seat adjustment

- To reduce the risk of sliding under the lap belt during a collision, do not recline the seat more than necessary.
  If the seat is reclined too far, the lap belt may slide past the hips and apply restraint forces directly to the abdomen or your neck may contact the shoulder belt, increasing the risk of death or serious injury in the event of an accident.
  Adjustments should not be made while driving as the seat may unexpectedly move and cause the driver to lose control of the vehicle.
- Manual seat: After adjusting the seat, make sure that the seat is locked in position.

**Second seats (Tip-up seat)**

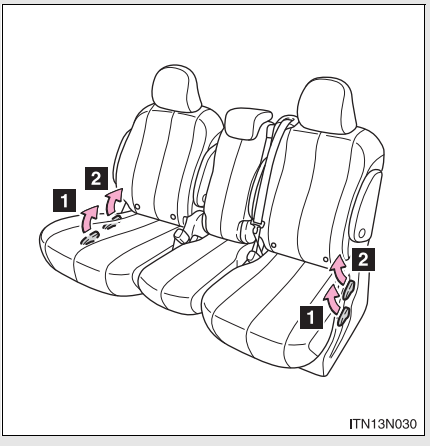


1 Seat position adjustment lever

2 Seatback angle adjustment lever

**Second seats (Ottoman seat)**

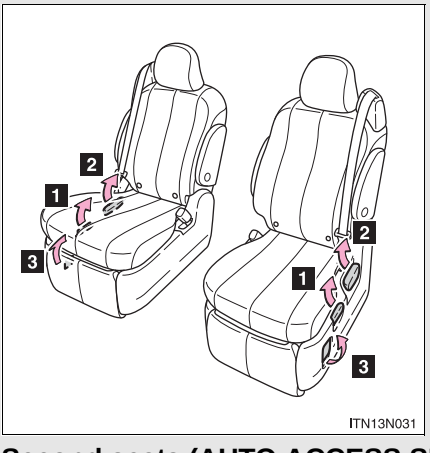


1 Seat position adjustment lever

2 Seatback angle adjustment lever

3 Ottoman angle adjustment lever

**Second seats (AUTO ACCESS SEAT)**

Refer to “AUTO ACCESS SEAT OWNER’S MANUAL”.

**Third seats (manual seat)**

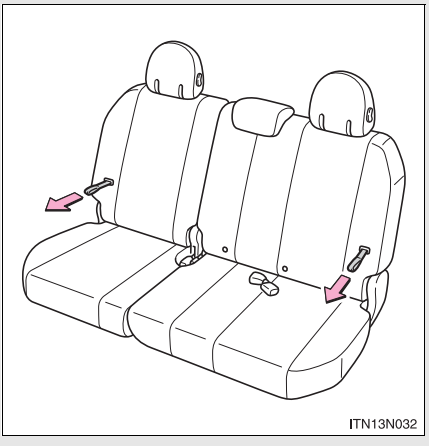


Seatback angle adjustment strap

**Third seats (power seat)**

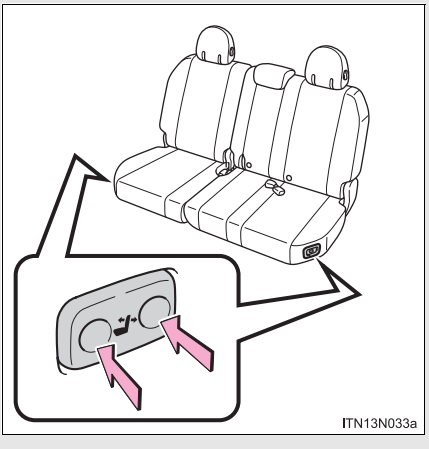


Seatback angle adjustment switch

## Moving a second seat for third seat access

### ■ Getting in the vehicle

**Tip-up seats**

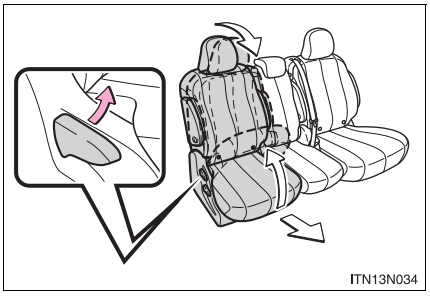


Pull the seatback angle adjustment lever and fold down the seatback. The cushion will tip up. The seat can slide forward.
Move the seat to the front-most position.

**Ottoman seats**

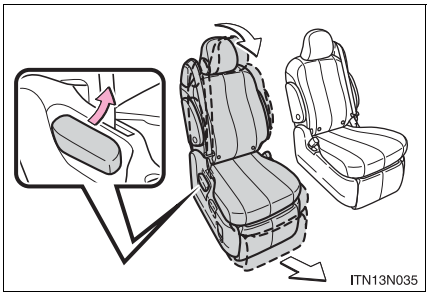


Pull the seatback angle adjustment lever and fold down the seatback. The seat can slide forward.
Move the seat to the front-most position.

## ■ Getting out of the vehicle

### Tip-up seats

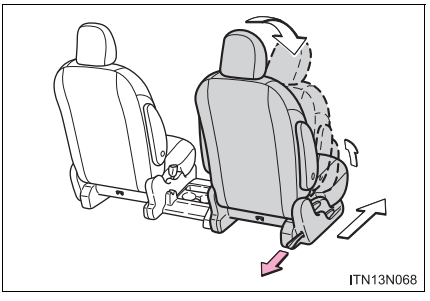


Pull the strap and fold down the seatback. The cushion will tip up. The seat can slide forward.
Move the seat to the front-most position.

Make sure that no passenger is seated on the second seat before pulling the strap.

### Ottoman seats

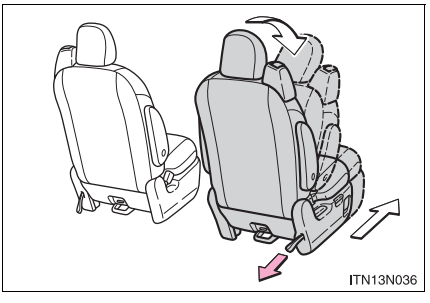


Pull the strap and fold down the seatback. The seat can slide forward.
Move the seat to the front-most position.

Make sure that no passenger is seated on the second seat before pulling the strap.

## ■ After passengers have entered/exited the vehicle

Lift up the seatback and slide the seat backward until it locks.

## Removing the second seats

### ■ Removing the second outside seats (Tip-up seats)

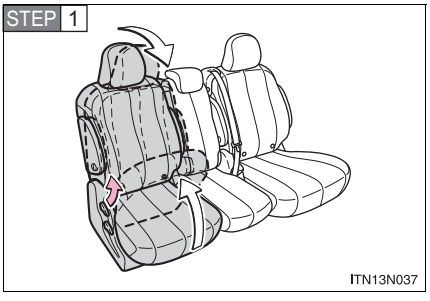


Pull the armrests up.
Pull the seatback adjustment lever and fold down the seatback. The cushion will tip up.

STEP 2 Slide the seat forward to a lock position.

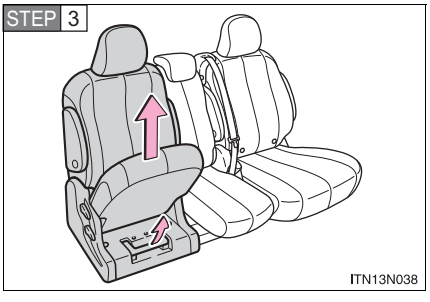


Pull the release lever under the cushion and simultaneously lift the seat to remove.

## ■ Removing the second outside seats (Ottoman seats)

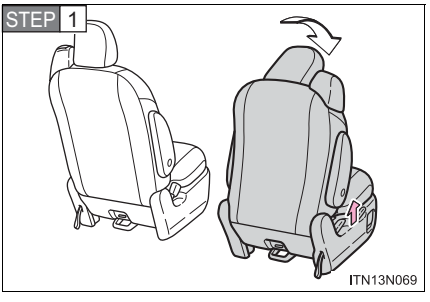


Pull the armrests up.

Pull the seatback adjustment lever and fold down the seatback.

STEP 2 Slide the seat to a forward lock position.

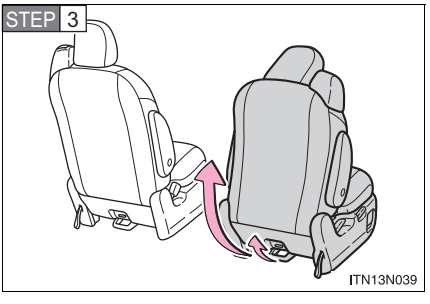


Pull the release lever behind the seatback and simultaneously lift the seat to remove.

## ■ Removing the second center seat (if equipped)

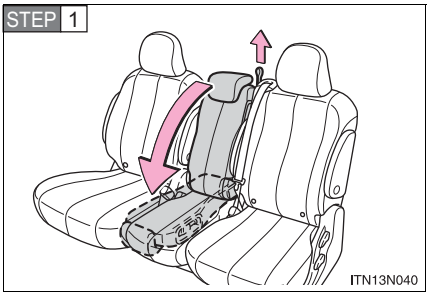


Pull the lock release strap and fold down the second center seatback.

Make sure that the head restraint is in the lowest position.

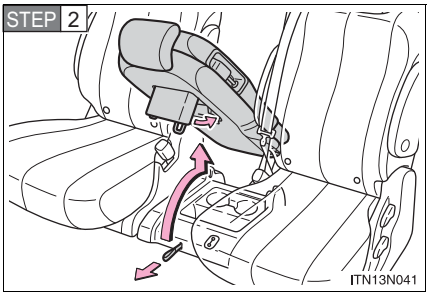


Pull the lock release strap under the seat to remove the seat.
Retract the cushion leg.

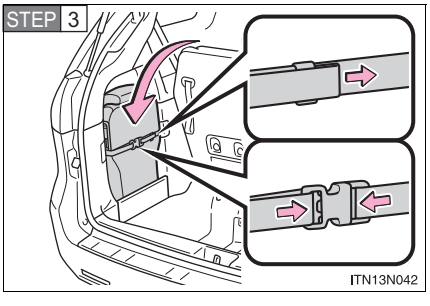


Stow the seat in the storage box of the luggage room (cushion side first).
Engage the stow latch buckle to hold the seat and tighten the latch strap.

## Installing the second seats

### ■ Installing the second outside seats

STEP 1 Align the marking on the seat side cover to the marking on the rail cover.

**Tip-up seat**

Align the marking on the seat front cover to the rail.

**Ottoman seat**

Align the marking on the seat back cover to the rail.

STEP 2 Lower the seat and engage the latches.

If you locked the seat latches unintentionally before installing securely, pull the release lever to unlock the latches.

Make sure the seat is locked in place by trying to shake the seatback and lift up the seat cushion.

## ■ Installing the second center seats (if equipped)

STEP 1

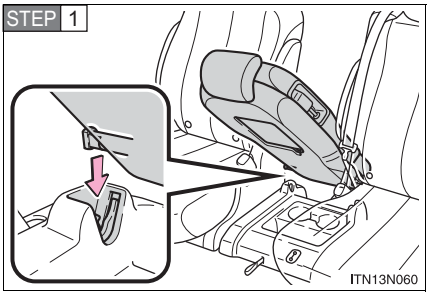


Engage the rear pins with the hooks.

STEP 2

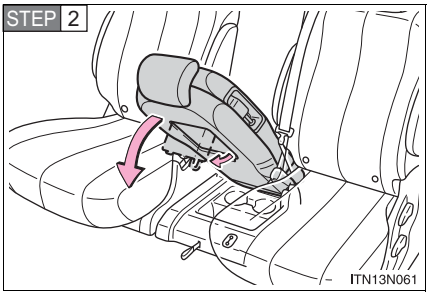


Unfold the cushion leg and push down on the seat to engage the front lock.

STEP 3

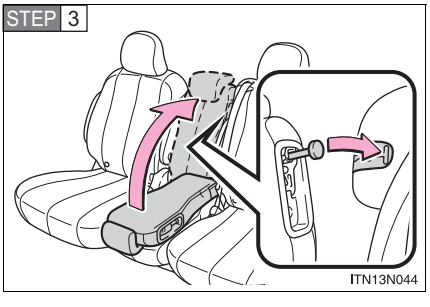


Unfold the seatback and lock it.

Make sure the seat is locked in place by trying to shake the seatback and lift up the seat cushion.

## Folding down the third seats (manual seats)

### ■ Before folding the third seats

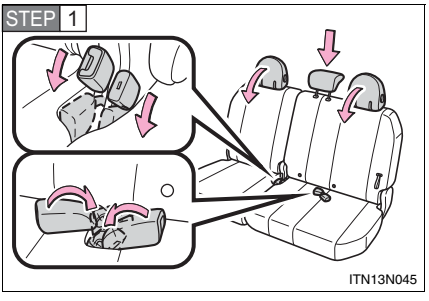


Fold the outside head restraints and lower the center head restraint to the lowest position, and stow the seat belt buckles.

STEP 2 Stow the center seat belt. (→P. 124)

### ■ Folding down the third seatbacks

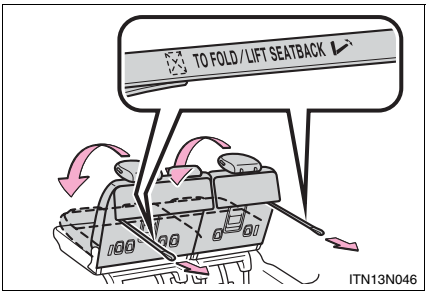


Pull the “TO FOLD/LIFT SEATBACK” strap and fold down the seatback.

### ■ Returning the third seatbacks

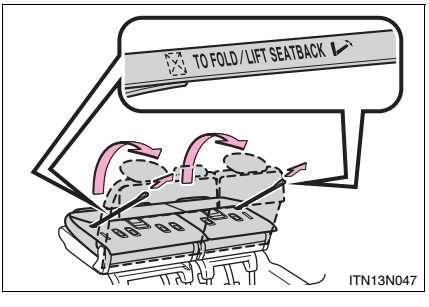


Pull the “TO FOLD/LIFT SEATBACK” strap, and raise the seatback and the outside head restraints.

## Folding down the third seats (power seats)

You can operate the power third seats when the shift lever is in P.

### ■ Before folding the third seats

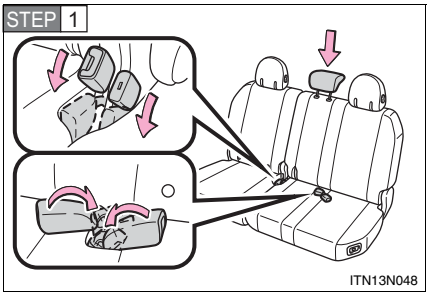


Lower the center head restraints to the lowest position and stow the seat belt buckles.

STEP 2 Stow the center seat belt. (→P. 124)

### ■ Folding down the third seatbacks

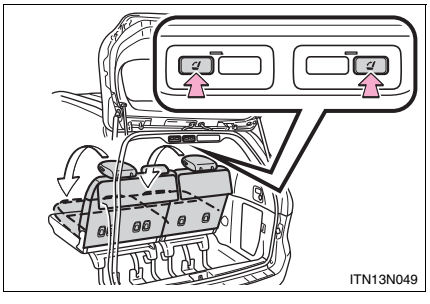


Press the folding/returning switch.

### ■ Returning the third seatbacks

Press the folding/returning switch, returning switch (→P. 108) or seatback angle adjustment switch (→P. 95).

## Stowing the third seats (manual seats)

Before stowing or returning third seat, remove any items from the floor area to prevent interference with moving parts.

### ■ Before stowing the third seats

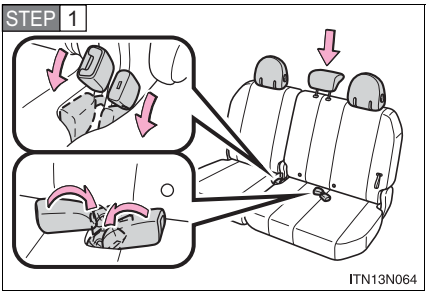


Lower the center head restraint to the lowest position, and stow the seat belt buckles.

STEP 2 Stow the center seat belt. (→P. 124)

### ■ Stowing the third seats

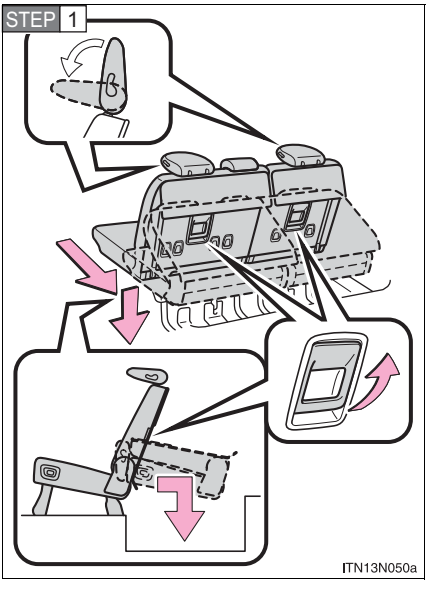


Pull the handle to move the seat rearward. Then push the seat down.

The outside head restraints are folded automatically.

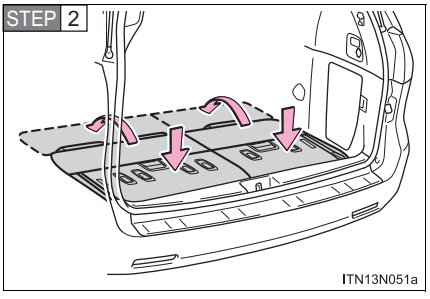


Push the seat against the floor and make sure it is locked securely.
Open the flaps.

## ■ Returning the third seats

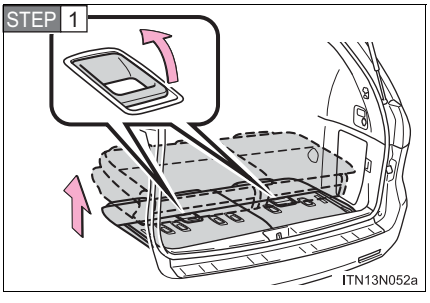


Return the flaps.
Pull the handle and lift up the seat rearward.

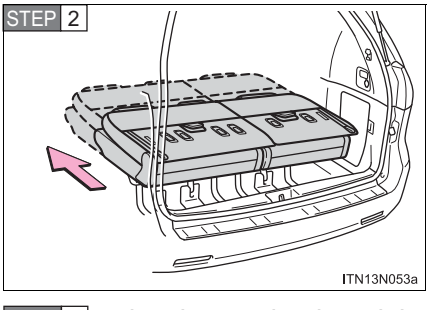


Push the seat forward and then engage the front leg locks.

Make sure the front and rear legs are locked securely.

STEP 3 Raise the seatback and the outside head restraints. (→P. 103)

## Stowing the third seats (power seats)

You can operate the power third seats when the shift lever is in P. Before stowing or returning third seat, remove any items from the floor area to prevent interference with moving parts.

### ■ Before stowing the third seats

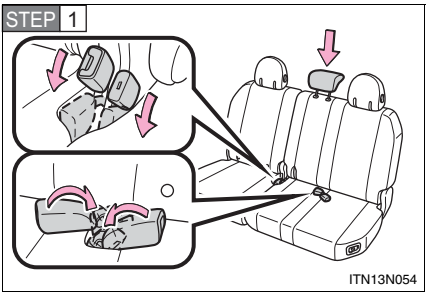


Lower the center head restraints to the lowest position and stow the seat belt buckles.

STEP 2 Stow the center seat belt. (→P. 124)

### ■ Stowing the third seats

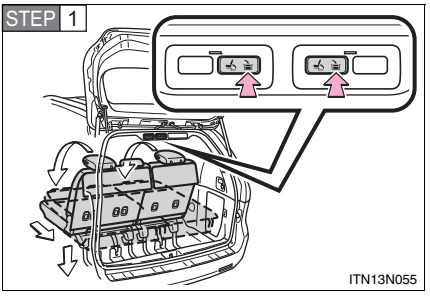


Press and hold the stowing switch.

A beep sounds twice to indicate the start of the operation. The beep sounds again twice when the operation is completed.

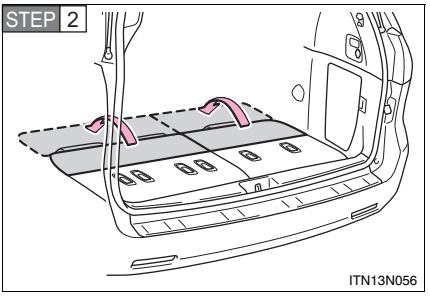


Open the flaps.

### Before returning the third seats

Be sure to move the second seats forward from the rear most position, as they may interfere with the third seats returning operation.

### Returning the third seats

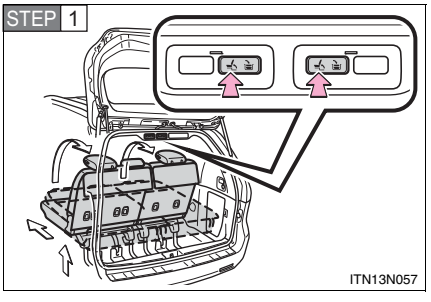


Return the flaps.

Press and hold the returning switch until the seat cushion is locked.

A beep sounds twice to indicate the start of the operation. The beep sounds again twice when the seats are locked in folded-down position. Make sure the front and rear legs are locked securely.

STEP 2 Raise the outside head restraints.

### Power third seat

- If the indicator light above the switches flashes three times when the folding/returning switch is pressed, the folding operation will not start. Make sure the shift lever is in P.
- If any of the following conditions occur while the seat is operating, the seat operation will stop. The indicator light above the switches will flash three times and a beep will sound for about 10 seconds:
  - An object is caught between the seatback and seat cushion.
  - The stowing switch is released.
  - Other power third seat switch is pushed while operating the stowing switch.
  - The shift lever is moved from P when the “ENGINE START STOP” switch is in IGNITION ON mode.

  If the engine is started during operating, the seat operation may also be stopped.

  To continue the folding operation, the seatback must be returned to its original position first.

### AUTO ACCESS SEAT (if equipped)

The AUTO ACCESS SEAT cannot be removed.

### “3RD SEAT” warning light (vehicles with power third seat)

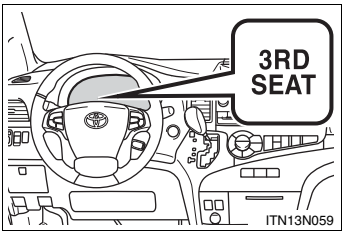


The warning light comes on if the third seat operation is not yet complete when the “ENGINE START STOP” switch is in IGNITION ON mode.

CAUTION

**When folding the rear seatbacks down**

Observe the following precautions. Failure to do so may result in death or serious injury.

- Do not fold the seatbacks down while driving.
- Stop the vehicle on level ground, set the parking brake and shift the shift lever to P.
- Do not allow anyone to sit on a folded seatback or in the luggage compartment while driving.
- Do not allow children to enter the luggage compartment.
- Be careful not to get any part of your body pinched by a seat.

**Seat adjustment**

To reduce the risk of sliding under the lap belt during a collision, do not recline the seat more than necessary.
If the seat is reclined too far, the lap belt may slide past the hips and apply restraint forces directly to the abdomen, or your neck may contact the shoulder belt, increasing the risk of death or serious injury in the event of an accident.
Adjustments should not be made while driving as the seat may unexpectedly move and cause the driver to lose control of the vehicle.

CAUTION

**After returning the rear seatbacks or installing seats**

Observe the following precautions. Failure to do so may result in death or serious injury.

- Make sure the seatback is securely locked by pushing it forward and rearward on the top.
- Check that the seat belts are not twisted or caught in the seatback.
- Make sure the seat is locked in place by trying to shake the seatback and lift up the seat cushion.

**Removing the second seats**

- Do not leave a seat in the vehicle if it has been disengaged from the floor.
- Do not sit on or place anything on a seat that has been removed from the vehicle.

**Stowing the third seats**

- Make sure that the seat path is clear before moving the seat. Otherwise, injury may result from contact with, or by being pinched by parts of the seat.
- Manual third seats: Do not sit on the third seat when it is in the stowed position with the seatback upright.
- Power third seats: Do not continue the stowing operation when the indicator above the stowing switch and returning switch comes on or flashes. An object or a person may be caught in the seat.
- Power third seats: During the stowing operation, to prevent the vehicle from moving, do not shift the shift lever out of P with the engine switch in the “ON” position (vehicles without a smart key system) or the “ENGINE START STOP” switch in IGNITION ON mode (vehicles with a smart key system).

CAUTION

**When adjusting the seat position or the ottoman (vehicles with Ottoman seats)**

Make sure to leave enough space around the feet so as not to get them caught.

**When using the ottoman (vehicles with Ottoman seats)**

- Do not sit on the ottoman. Seat belts may not be properly worn which may result in death or serious injury.
- Stow the ottoman when you get in and out of the vehicle or when the ottoman is not in use to avoid stumbling over it.

NOTICE

**To prevent damage to the seat**

- Avoid putting heavy loads on a folded seat that is being used as a temporary table.
- Do not sit on or put heavy loads on a second seat that has been removed from the vehicle. The metal tips of the seat leg may be damaged, preventing reinstallation of the seat.
- The second seats must be reinstalled in their original positions. If they are installed in the wrong position, the seat locks or bezels will be damaged.
- Make sure that the path the seat will move through is clear before stowing or returning the third seat.
- 8-passenger models: Be sure to raise the stowed second center seat above the outer trim, when removing from the storage box of the luggage room.

NOTICE

**Stowing the seat belt**

The seat belts and the buckles must be stowed before you fold down the rear seatbacks.

**To prevent an ottoman malfunction (vehicles with Ottoman seats)**

- Do not place any objects in the second passenger footwell that could prevent the operation of the ottoman.
- Do not place heavy luggage on the ottoman.
- Do not place anything under the ottoman when in use. There is a possibility that something may get caught and cause damage when stowing the ottoman.

# Driving position memory*

**Your preferred driving position (the position of the driver's seat and outside rear view mirrors) can be memorized and recalled with the touch of a button. It is also possible to set this function to activate automatically when the doors are unlocked.**
**Two different driving positions can be entered into memory.**

## ■ Entering a position to memory

STEP 1 **Vehicles without a smart key system**
Turn the engine switch to the "ON" position.
**Vehicles with a smart key system**
Turn the "ENGINE START STOP" switch to IGNITION ON mode.

STEP 2 Adjust the driver's seat and outside rear view mirrors to the desired positions.

STEP 3

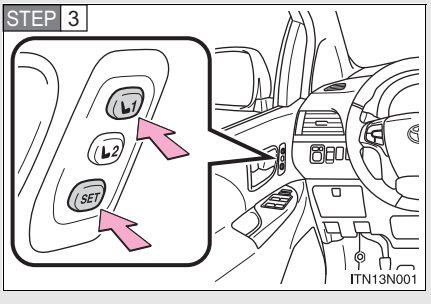


Press the "SET" button, then within 3 seconds press button "1" or "2" until the signal beeps.

If the selected button has already been preset, the previously recorded position will be overwritten.

*: If equipped

### ■ Recalling the memorized position

Check that the shift lever is in P.

STEP 1 **Vehicles without a smart key system**

Turn the engine switch to the “ON” position.

**Vehicles with a smart key system**

Turn the “ENGINE START STOP” switch to IGNITION ON mode.

STEP 2

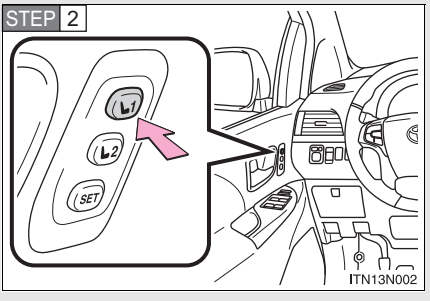


Press button “1” or “2” to recall the desired position.

## Linking driving position memory with door unlock operation

Record your driving position to button “1” or “2” before performing the following:

### Vehicles without a smart key system

Carry only the wireless remote control to which you want to link the driving position.

STEP 1 Unlock the vehicle with the wireless remote control to which you want to link the driving position.

STEP 2 Shift the shift lever to P and close the driver’s door. Turn the engine switch to the “ON” position.

STEP 3

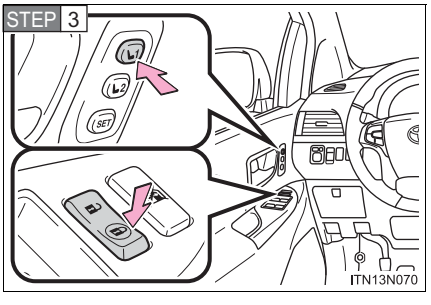


Press the desired button (“1” or “2”) to recall the position. Then, while keep pressing the button, press the driver’s door lock switches (either lock or unlock) until the signal beeps.

The driving position is recalled when the driver’s door is unlocked using the wireless remote control and the driver’s door is opened.

**Vehicles with a smart key system**

Carry only the electronic key to which you want to link the driving position. If 2 or more keys are in the vehicle, the driving position cannot be linked properly.

STEP 1 Shift the shift lever to P and close the driver's door. Turn the "ENGINE START STOP" switch to IGNITION ON mode.

STEP 2

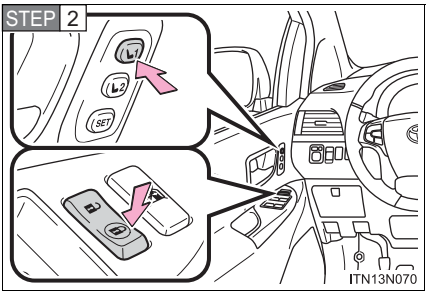


Press the desired button ("1" or "2") to recall the position. Then, while keep pressing the button, press the driver's door lock switches (either lock or unlock) until the signal beeps.

The driving position is recalled when the driver's door is unlocked using the wireless remote control and the driver's door is opened.

### ■Operating the driving position memory after turning the engine off

**Vehicles without a smart key system**
Memorized positions can be activated up to 180 seconds after the driver's door is opened and another 60 seconds after it is closed again, even after turning the engine switch to the "LOCK" position.
**Vehicles with a smart key system**
Memorized positions can be activated up to 180 seconds after the driver's door is opened and another 60 seconds after it is closed again, even after turning the "ENGINE START STOP" switch off.

### ■Stopping seat position operation part-way through

Perform any of the following operations.

- Press the "SET" button.
- Press button "1" or "2".
- Adjust the seat using the switches (only cancels seat position recall).

**⚠ CAUTION**

### ■Seat adjustment caution

Take care during seat adjustment so that the seat does not strike the rear passenger or squeeze your body against the steering wheel.

# Head restraints

**Head restraints are provided for all seats.**

## Front and second outside seats

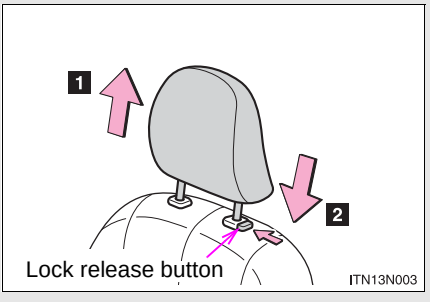


**1** Up

Pull the head restraints up.

**2** Down

Push the head restraint down while pressing the lock release button.

## Second center* and third center seats

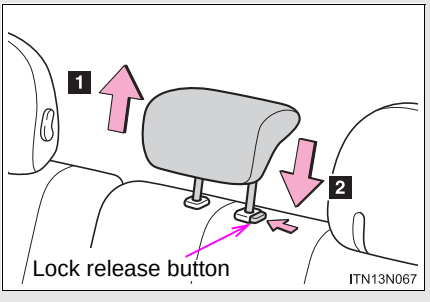


**1** Up

Pull the head restraints up.

**2** Down

Push the head restraint down while pressing the lock release button.

*: 8-passenger models only

## Third outside seats

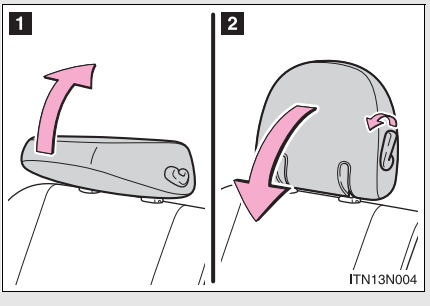


**1** To use

Pull the head restraints up.

**2** To fold

Push the head restraint down while pressing the lever downward.

## Adjusting the height of the head restraints

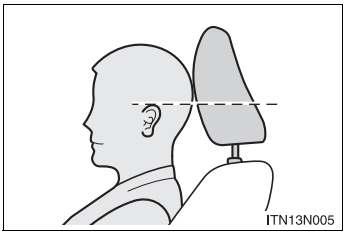


Make sure that the head restraints are adjusted so that the center of the head restraint is closest to the top of your ears.

## Adjusting the center seat head restraints

Always raise the head restraint one level from the stowed position when using.

## Removing the head restraints

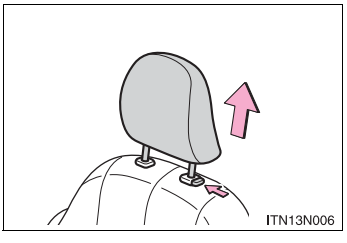


Pull the head restraint up while pressing the lock release button.

The head restraint of third outside seat can not be removed.

### Installing the head restraints (front, second and third center seats)

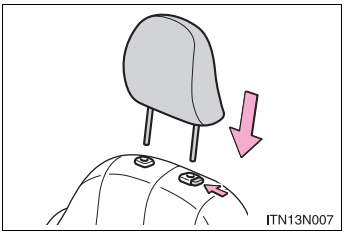


Align the head restraint with the installation holes and push it down to the lock position.

Press and hold the lock release button when lowering the head restraint.

**CAUTION**

**Head restraint precautions**

Observe the following precautions regarding the head restraints. Failure to do so may result in death or serious injury.

- Use the head restraints designed for each respective seat.
- Adjust the head restraints to the correct position at all times.
- After adjusting the head restraints, push down on them and make sure they are locked in position.
- Do not drive with the head restraints removed.

**Make sure that all occupants are wearing their seat belts before driving the vehicle.**

## Correct use of the seat belts

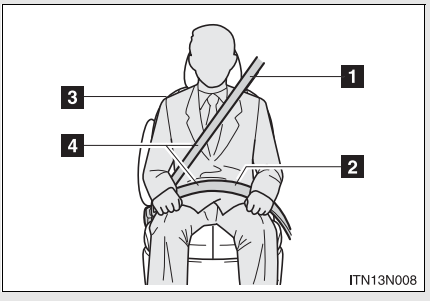


1. Extend the shoulder belt so that it comes fully over the shoulder, but does not come into contact with the neck or slide off the shoulder.
2. Position the lap belt as low as possible over the hips.
3. Adjust the position of the seatback. Sit up straight and well back in the seat.
4. Do not twist the seat belt.

## Fastening and releasing the seat belt

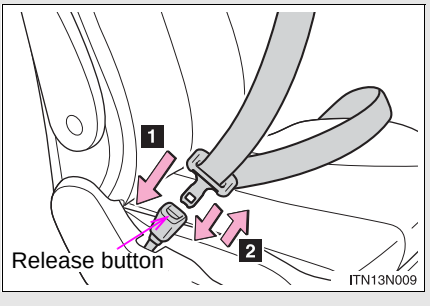


1. To fasten the seat belt, push the plate into the buckle until a click sound is heard.
2. To release the seat belt, press the release button.

### Adjusting the seat belt shoulder anchor height (front and second outside Tip-up seats)

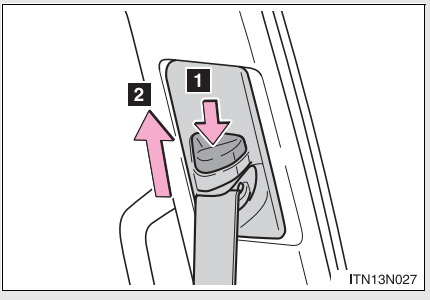


1 Push the seat belt shoulder anchor down while pressing the release button.

2 Push the seat belt shoulder anchor up.

Move the height adjuster up and down as needed until you hear a click.

## Third center seat belt

The third center seat belt is a 3-point type restraint with 2 buckles. Both seat belt buckles must be correctly located and securely latched for proper operation.

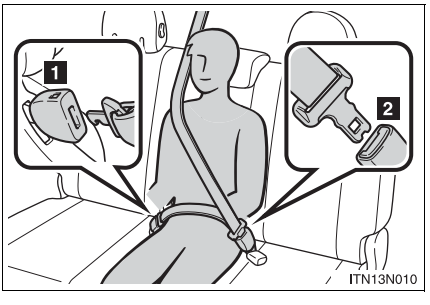


Make sure that the buckle 1 is securely latched for ready use of the center seat belt.

1 Matches the tab with the hooked end.

2 Matches the tab with the concave end.

## Release method

The belt can be completely released when not required, such as when folding down the third seat.

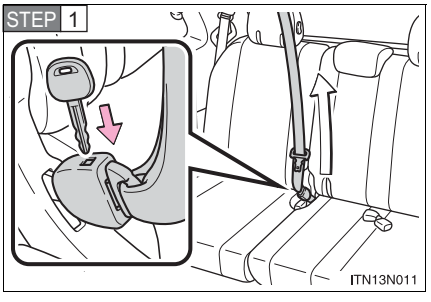


Insert the key into the hole on the center seat belt buckle to release the tab (with the hooked end), and allow the belt to retract.

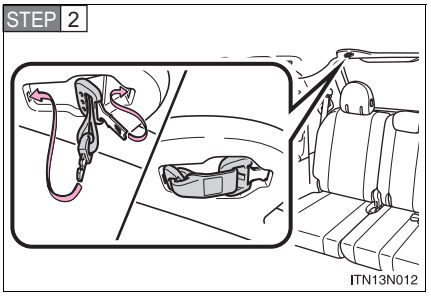


Stow the seat belt tabs in the cover set in the roof as shown.

## Extracting the belt

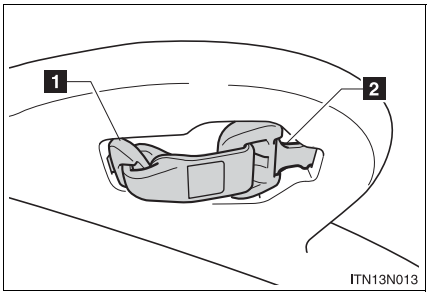


Pull tab 1 out and pull the belt out a little. Then pull tab 2 out.

## Seat belt pretensioners (front seats)

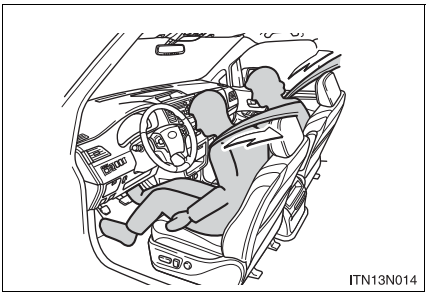


The pretensioner helps the seat belt to quickly restrain the occupant by retracting the seat belt when the vehicle is subjected to certain types of severe frontal collision.

The pretensioner may not activate in the event of a minor frontal impact, a side impact or a rear impact.

## Pre-collision seat belts (front seats of vehicles with pre-collision system)

If the pre-collision sensor detects that a collision is unavoidable, the pre-collision system will retract the seat belt, thus enhancing the effectiveness of the seat belt pretensioner in a crash.

The same will happen if the driver makes an emergency braking or loses control of the vehicle. (→P. 307)

### Emergency locking retractor (ELR)

The retractor will lock the belt during a sudden stop or on impact. It may also lock if you lean forward too quickly. A slow, easy motion will allow the belt to extend so that you can move around fully.

### Automatic locking retractor (ALR)

When a passenger's shoulder belt is completely extended and then retracted even slightly, the belt is locked in that position and cannot be extended. This feature is used to hold the child restraint system (CRS) firmly. To free the belt again, fully retract the belt and then pull the belt out once more. (→P. 182)

### Pregnant women

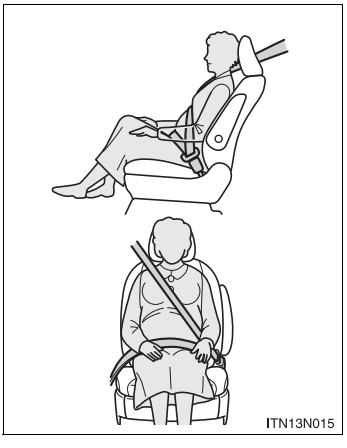


Obtain medical advice and wear the seat belt in the proper way. (→P. 122)

Women who are pregnant should position the lap belt as low as possible over the hips in the same manner as other occupants. Extend the shoulder belt completely over the shoulder and position the belt across the chest. Avoid belt contact over the rounding of the abdominal area.

If the seat belt is not worn properly, not only a pregnant woman, but also the fetus could suffer death or serious injury as a result of sudden braking or a collision.

### ■People suffering illness

Obtain medical advice and wear the seat belt in the proper way. (→P. 122)

### ■Child seat belt usage

The seat belts of your vehicle were principally designed for persons of adult size.

- Use a child restraint system appropriate for the child, until the child becomes large enough to properly wear the vehicle's seat belt. (→P. 178)
- When the child becomes large enough to properly wear the vehicle's seat belt, follow the instructions on P. 122 regarding seat belt usage.

### ■Replacing the belt after the pretensioner has been activated

If the vehicle is involved in multiple collisions, the pretensioner will activate for the first collision, but will not activate for the second or subsequent collisions.

### ■Seat belt extender

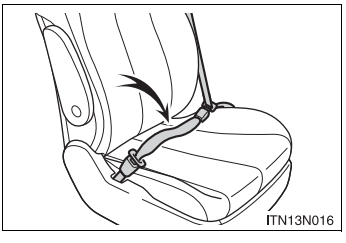


If your seat belts cannot be fastened securely because they are not long enough, a personalized seat belt extender is available from your Toyota dealer free of charge.

CAUTION

**■ Wearing a seat belt**

Observe the following precautions to reduce the risk of injury in the event of sudden braking, sudden swerving or an accident.
Failing to do so may cause death or severe injury.

- Ensure that all passengers wear a seat belt.
- Always wear a seat belt properly.
- Each seat belt should be used by one person only. Do not use a seat belt for more than one person at once, including children.
- Toyota recommends that children be seated in the rear seat and always use a seat belt and/or an appropriate child restraint system.
- To achieve a proper seating position, do not recline the seat more than necessary. The seat belt is most effective when the occupants are sitting up straight and well back in the seats.
- Do not wear the shoulder belt under your arm.
- Always wear your seat belt low and snug across your hips.
- Always wear the belt with the shoulder portion over the outside armrest and the lap portion under the outside armrest.

**■ Adjustable shoulder anchor**

Always make sure the shoulder belt is positioned across the center of your shoulder. The belt should be kept away from your neck, but not falling off your shoulder. Failure to do so could reduce the amount of protection in an accident and cause death or serious injuries in the event of a sudden stop, sudden swerve or accident. (→P. 123)

CAUTION

■ **Seat belt pretensioners**

- Do not place anything, such as a cushion, on the front passenger's seat. Doing so will disperse the passenger's weight, which prevents the sensor from detecting the passenger's weight properly. As a result, the seat belt pretensioner for the front passenger's seat may not activate in the event of a collision.
- If the pretensioner has activated, the SRS warning light will come on. In that case, the seat belt cannot be used again and must be replaced at your Toyota dealer.

■ **Child restraint lock function belt precaution**

Do not allow children to play with the child restraint lock function belt. If the belt becomes twisted around a child's neck, it will not be possible to pull the belt out leading to choking or other serious injuries that could result in death. If this occurs and the buckle cannot be unfastened, scissors should be used to cut the belt.

■ **Seat belt damage and wear**

- Do not damage the seat belts by allowing the belt, plate, or buckle to be jammed in the door.
- Inspect the seat belt system periodically. Check for cuts, fraying, and loose parts. Do not use a damaged seat belt until it is replaced. Damaged seat belts cannot protect an occupant from death or serious injury.
- Ensure that the belt and tab are locked and the belt is not twisted.
  If the seat belt does not function correctly, immediately contact your Toyota dealer.
- Replace the seat assembly, including the belts, if your vehicle has been involved in a serious accident, even if there is no obvious damage.
- Do not attempt to install, remove, modify, disassemble or dispose of the seat belts. Have any necessary repairs carried out by your Toyota dealer. Inappropriate handling of the pretensioner may prevent it from operating properly resulting in death or serious injury.

CAUTION

■ **When using the third center seat belt**

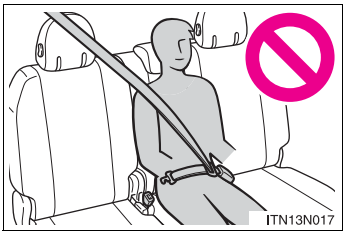


Do not use the third center seat belt with either buckle released. Fastening only one of the buckles may result in death or serious injury in case of sudden braking or a collision.

■ **Using a seat belt extender**

- Do not wear the seat belt extender if you can fasten the seat belt without the extender.
- Do not use the seat belt extender when installing a child restraint system because the belt will not securely hold the child restraint system, increasing the risk of death or serious injury in the event of an accident.
- The personalized extender may not be safe on another vehicle, when used by another person, or at a different seating position other than the one originally intended.

NOTICE

■ **When using a seat belt extender**

When releasing the seat belt, press on the buckle release button on the extender, not on the seat belt.
This helps prevent damage to the vehicle interior and the extender itself.

# Steering wheel

**The steering wheel can be adjusted to a comfortable position.**

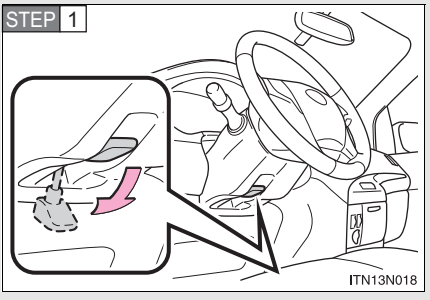


Hold the steering wheel and press the lever down.

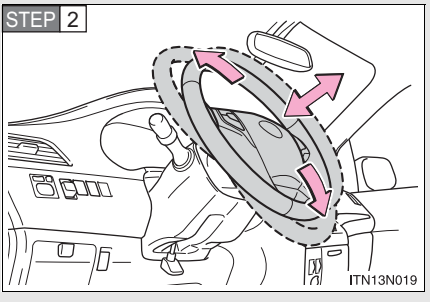


Adjust to the ideal position by moving the steering wheel horizontally and vertically.

After adjustment, pull the lever up to secure the steering wheel.

## CAUTION

**■ Caution while driving**

Do not adjust the steering wheel while driving.
Doing so may cause the driver to mishandle the vehicle and cause an accident, resulting in death or serious injury.

**■ After adjusting the steering wheel**

Make sure that the steering wheel is securely locked.
Otherwise, the steering wheel may move suddenly, possibly causing an accident and resulting in death or serious injury.

# Inside rear view mirror

**Glare from the headlights of vehicles behind can be reduced by using the following functions.**

## Manual anti-glare inside rear view mirror

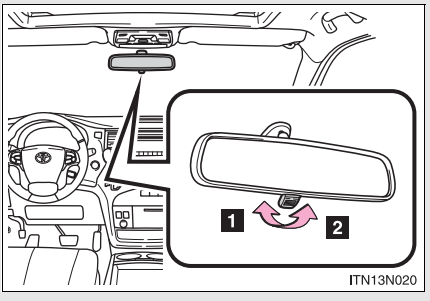


1 Normal position

2 Anti-glare position

## Auto anti-glare inside rear view mirror

In automatic mode, sensors are used to detect the headlights of vehicles behind and the reflected light is automatically reduced.

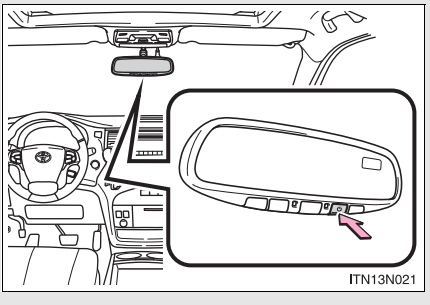


Turns automatic mode on/off

The indicator comes on when automatic mode is turned on.

**Vehicles without a smart key system**
The mirror will revert to the automatic mode each time the engine switch is turned to the “ON” position.

**Vehicles with a smart key system**
The mirror will revert to the automatic mode each time the “ENGINE START STOP” switch is turned to IGNITION ON mode.

### To prevent sensor error (vehicles with auto anti-glare inside rear view mirror)

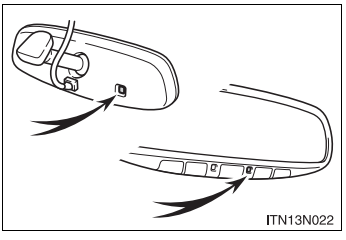


To ensure that the sensors operate properly, do not touch or cover them.

**CAUTION**

**Caution while driving**

Do not adjust the position of the mirror while driving.
Doing so may lead to mishandling of the vehicle and cause an accident, resulting in death or serious injury.

# Outside rear view mirrors

**Mirror angle can be adjusted using the switch.**

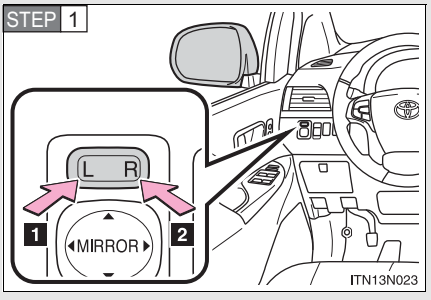


To select a mirror to adjust, press the switch.

1 Left

2 Right

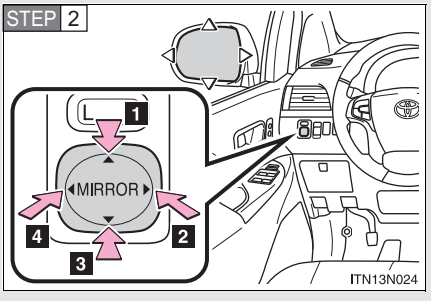


To adjust the mirror, press the switch.

1 Up

2 Right

3 Down

4 Left

## Folding back the mirrors

### Manual type

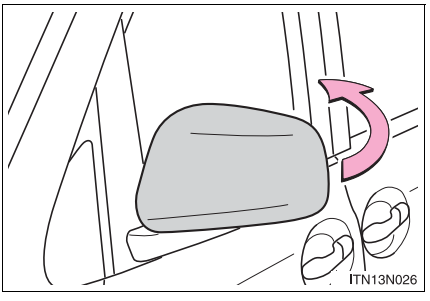


Push the mirror back in the direction of the vehicle's rear.

### Power type

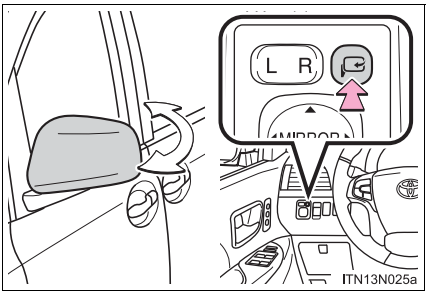


Press the switch to fold the mirrors.

Press it again to extend them to the original position.

■ **Mirror angle can be adjusted when**

**Vehicles without a smart key system**
The engine switch is in the “ACC” or “ON” position.
**Vehicles with a smart key system**
The “ENGINE START STOP” switch is in ACCESSORY or IGNITION ON mode.

■ **When the mirrors are fogged up (vehicles with outside rear view mirror defoggers)**

Turn on the mirror defoggers to defog the mirrors. (→P. 369)

■ **Automatic adjustment of the mirror angle (vehicles with driving position memory)**

A desired mirror face angle can be entered to memory and recalled automatically by the driving position memory. (→P. 114)

■ **Auto anti-glare function (vehicles with auto anti-glare inside rear view mirror)**

When the anti-glare inside rear view mirror is set to automatic mode, the outside rear view mirrors will activate in conjunction with the anti-glare inside rear view mirror to reduce reflected light. (→P. 132)

■ **Linked mirror function when reversing (if equipped)**

The outside rear view mirrors will automatically angle downwards when the vehicle is reversing in order to give a better view of the ground. However, this function will not operate when the mirror select switch is in the neutral position (between “L” and “R”).

CAUTION

**When driving the vehicle**

Observe the following precautions while driving.
Failing to do so may result in loss of control of the vehicle and cause an accident, resulting in death or serious injury.

- Do not adjust the mirrors while driving.
- Do not drive with the mirrors folded.
- Both the driver and passenger side mirrors must be extended and properly adjusted before driving.

**When a mirror is moving**

To avoid personal injury and mirror malfunction, be careful not to get your hand caught by the moving mirror.

**When the mirror defoggers are operating (vehicles with outside rear view mirror defoggers)**

Do not touch the rear view mirror surfaces, as they can become very hot and burn you.

# Power windows

**The power windows can be opened and closed using the switches.**

Operating the switch moves the windows as follows:

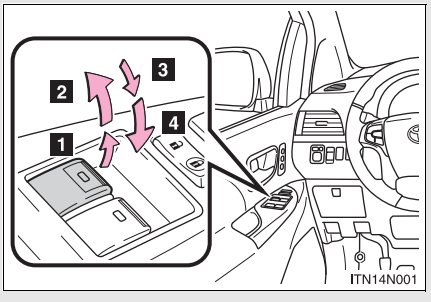


1 Closing

2 One-touch closing*

3 Opening

4 One-touch opening*

*: Pressing the switch in the opposite direction will stop window travel partway.

## Window lock switch

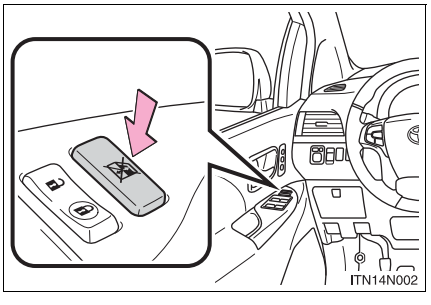


Press the switch down to lock the passenger window switches.

Use this switch to prevent children from accidentally opening or closing a passenger window.

### The power windows can be operated when

**Vehicles without a smart key system**
The engine switch is in the “ON” position.
**Vehicles with a smart key system**
The “ENGINE START STOP” switch is in IGNITION ON mode.

### Operating the power windows after turning the engine off

**Vehicles without a smart key system**
The power windows can be operated for approximately 45 seconds even after the engine switch is turned to the “ACC” or “LOCK” position. They cannot, however, be operated once either front door is opened.
**Vehicles with a smart key system**
The power windows can be operated for approximately 45 seconds even after the “ENGINE START STOP” switch is turned to ACCESSORY mode or turned off. They cannot, however, be operated once either front door is opened.

### Jam protection function

If an object becomes caught between the window and the window frame, window travel is stopped and the window is opened slightly.

CAUTION

**■ Closing the windows**

Observe the following precautions.
Failing to do so may result in death or serious injury.

- Check to make sure that all passengers do not have any part of their body in a position where it could be caught when a window is being operated.
- Do not allow children to operate the power windows.
  Closing a power window on someone can cause serious injury, and in some instances, even death.

**■ Jam protection function**

- Never use any part of your body to intentionally activate the jam protection function.
- The jam protection function may not work if something gets caught just before the window fully closes.
- The jam protection function is disabled if the switch is pulled and held during one-touch closing operation.

# Quarter windows

**The quarter windows can be opened to bring in fresh outside air for additional ventilation.**

## Manual type

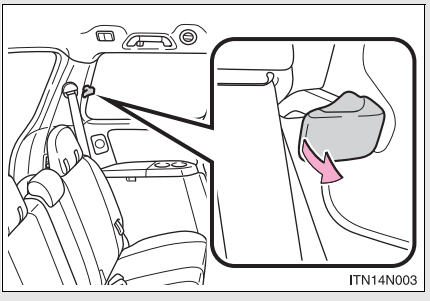


Pull the handle and swing the window fully out to open.

## Power type

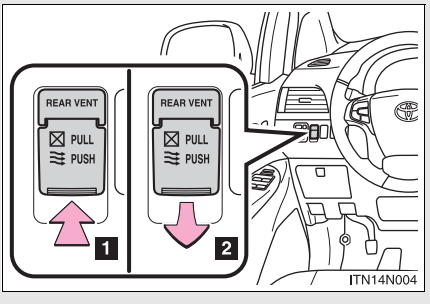


1 Opening

2 Closing

Both the left and right quarter windows move.

### The windows can be operated when (power type)

**Vehicles without a smart key system**
The engine switch is in the “ON” position.
**Vehicles with a smart key system**
The “ENGINE START STOP” switch is in IGNITION ON mode.

### Operating the windows after turning the engine off (power type)

**Vehicles without a smart key system**
The power type windows can be operated for approximately 45 seconds even after the engine switch is turned to the “ACC” or “LOCK” position. They cannot, however, be operated once either front door is opened.
**Vehicles with a smart key system**
The power type windows can be operated for approximately 45 seconds even after the “ENGINE START STOP” switch is turned to ACCESSORY mode or turned off. They cannot, however, be operated once either front door is opened.

**CAUTION**

### Closing the windows

Observe the following precautions.
Failing to do so may result in death or serious injury.

- Check to make sure that all passengers do not have any part of their body in a position where it could be caught when a window is being operated.
- Do not allow children to operate the power windows.
  Closing a power window on someone can cause serious injury, and in some instances, even death.

# Moon roof*

**Use the overhead switches to open and close the moon roof.**

## ■ Front moon roof

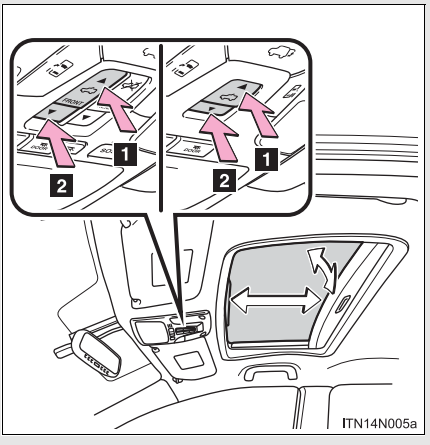


**1** Opens the moon roof*

The moon roof will stop at the tilt up position once.
To tilt down, press the opposite side of the switch.
Press the switch again to open.

**2** Closes the moon roof*

*: Lightly press either of the roof switches to stop the moon roof partway.

## ■ Rear moon roof (if equipped)

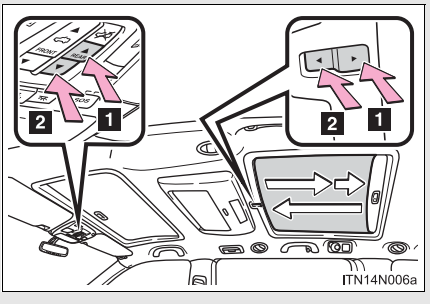


**1** Opens the moon roof*

The moon roof stops just before it is opened fully. Press the switch again to open fully.

**2** Closes the moon roof*

*: Lightly press either of the roof switches to stop the moon roof partway.



*: If equipped

## Canceling the rear moon roof operation (vehicles with the rear moon roof)

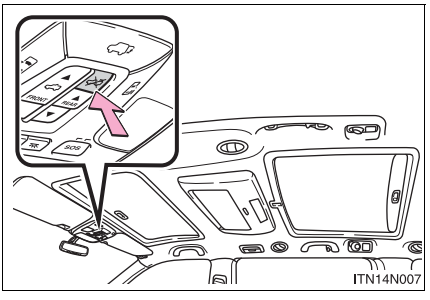


Press the switch to disable the rear moon roof operation from the rear seat.

Pressing the switch again will enable the operation again.

### ■ The moon roof can be operated when

**Vehicles without a smart key system**
The engine switch is in the “ON” position.
**Vehicles with a smart key system**
The “ENGINE START STOP” switch is in IGNITION ON mode.

### ■ Operating the moon roof after turning the engine off

**Vehicles without a smart key system**
The moon roof can be operated for approximately 45 seconds after the engine switch is turned to the “ACC” or “LOCK” position. It cannot, however, be operated once either front door is opened.
**Vehicles with a smart key system**
The moon roof can be operated for approximately 45 seconds after the “ENGINE START STOP” switch is turned to ACCESSORY mode or turned off. It cannot, however, be operated once either front door is opened.

### ■ Jam protection function

If an object is detected between the moon roof and the frame while the moon roof is closing, travel is stopped and the moon roof opens slightly.

### Sunshade

The sunshade can be opened and closed manually. However, both front and rear sunshades open automatically when the moon roof is opened.

### When the moon roof does not close normally

STEP 1 Stop the vehicle.

STEP 2 Press and hold the close switch.*
The moon roof will start moving after pausing for about 10 seconds. Continue to hold the switch.

STEP 3 Release the button when the moon roof stops moving.
Within 4 seconds, press and hold the close switch again. Continue to hold the switch as the moon roof opens and closes.

STEP 4 Release the close switch when the moon roof completely stops.

*: If the switch is released at the incorrect time, the procedure will have to be performed again from the beginning.

CAUTION

■ **Opening the moon roof**

Observe the following precautions.
Failing to do so may cause death or serious injury.

- Do not allow any passengers to put their hands or heads outside the vehicle while it is moving.
- Do not sit on top of the moon roof.

■ **Closing the moon roof**

Observe the following precautions.
Failing to do so may result in death or serious injury.

- Check to make sure that all passengers do not have any part of their bodies in a position where it could be caught when the moon roof is being operated.
- Do not allow children to operate the moon roof.
  Closing the moon roof on someone can cause death or serious injury.

■ **Jam protection function**

- Never use any part of your body intentionally to activate the jam protection function.
- The jam protection function may not work if something gets caught just before the moon roof fully closes.

# Opening the fuel tank cap

**Perform the following steps to open the fuel tank cap:**

## ■ Before refueling the vehicle

**Vehicles without a smart key system**

Turn the engine switch off and ensure that all the doors and windows are closed.

**Vehicles with a smart key system**

Turn the “ENGINE START STOP” switch off and ensure that all the doors and windows are closed.

## ■ Opening the fuel tank cap

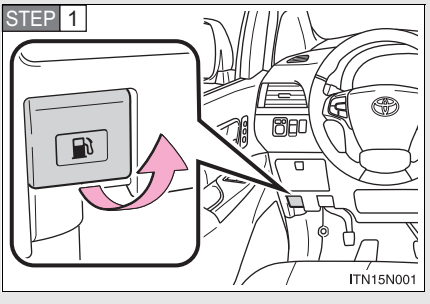


Pull up the opener to open the fuel filler door.

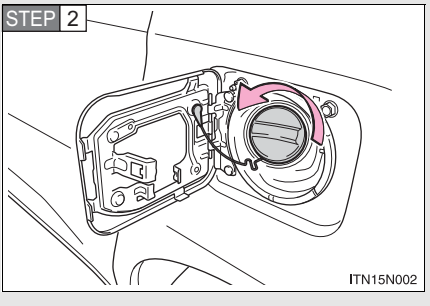


Turn the fuel tank cap slowly to open.

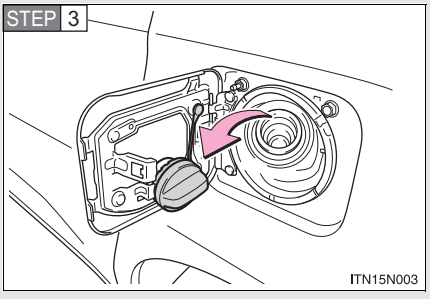


Hang the fuel tank cap on the back of the fuel filler door.

## Closing the fuel tank cap

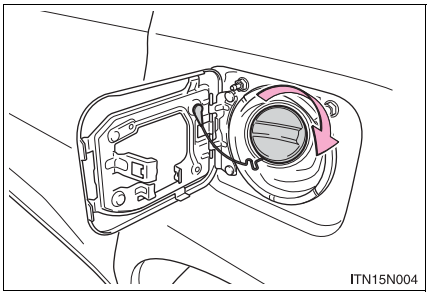


After refueling, turn the fuel tank cap until you hear a click. Once the cap is released, it will turn slightly in the opposite direction.

### Fuel type

Use unleaded gasoline (Octane rating 87 [Research Octane Number 91] or higher)

### Fuel tank capacity (reference)

20.9 gal. (79 L, 17.4 Imp. gal.)

CAUTION

**When refueling the vehicle**

Observe the following precautions while refueling the vehicle.
Failure to do so may result in death or serious injury.

- After exiting the vehicle and before opening the fuel door, touch an unpainted metal surface to discharge any static electricity. It is important to discharge static electricity before refueling because sparks resulting from static electricity can cause fuel vapors to ignite while refueling.
- Always hold the grips on the fuel tank cap and turn it slowly to remove it.
  A whooshing sound may be heard when the fuel tank cap is loosened. Wait until the sound cannot be heard before fully removing the cap.
  In hot weather, pressurized fuel may spray out of the filler neck and cause injury.
- Do not allow anyone that has not discharged static electricity from their body to come close to an open fuel tank.
- Do not inhale vaporized fuel.
  Fuel contains substances that are harmful if inhaled.
- Do not smoke while refueling the vehicle.
  Doing so may cause the fuel to ignite and cause a fire.
- Do not return to the vehicle or touch any person or object that is statically charged.
  This may cause static electricity to build up, resulting in a possible ignition hazard.

**CAUTION**

**When refueling**

Securely insert the fuel nozzle into the fuel filler neck. If fuel is added with the nozzle slightly lifted away from the fuel filler neck, the automatic shut off function may not operate, resulting in fuel overflowing from the tank.

**When replacing the fuel cap**

Do not use anything but a genuine Toyota fuel tank cap designed for your vehicle. Doing so may cause a fire or other incident which may result in death or serious injury.

**NOTICE**

**Refueling**

Do not spill fuel during refueling.
Doing so may damage the vehicle, such as causing the emission control systems to operate abnormally or damaging fuel system components or the vehicle's painted surface.

# Engine immobilizer system*

**The vehicle's keys have built-in transponder chips that prevent the engine from starting if a key has not been previously registered in the vehicle's on-board computer.**
**Never leave the keys inside the vehicle when you leave the vehicle.**

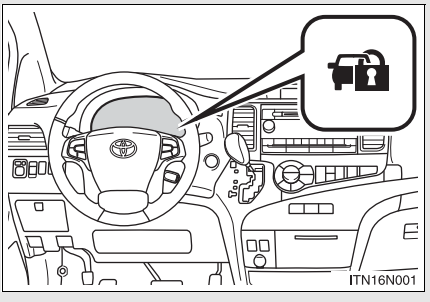


**Vehicles without a smart key system**

The indicator light flashes after the key has been removed from the engine switch to indicate that the system is operating.

The indicator light stops flashing after the registered key has been inserted into the engine switch to indicate that the system has been canceled.

**Vehicles with a smart key system**

The indicator light flashes after the "ENGINE START STOP" switch has been turned off to indicate that the system is operating.

The indicator light stops flashing after the "ENGINE START STOP" switch has been turned to ACCESSORY or IGNITION ON mode to indicate that the system has been canceled.

*: If equipped

## System maintenance

The vehicle has a maintenance-free type engine immobilizer system.

## Conditions that may cause the system to malfunction

- If the grip portion of the key is in contact with a metallic object
- If the key is in close proximity to or touching a key to the security system (key with a built-in transponder chip) of another vehicle

## Certifications for the engine immobilizer system

**U.S.A.**

Vehicles without a smart key system
FCC ID: WRKRI-34BTY

Vehicles with a smart key system
FCC ID: NI4TMIMB-1

This device complies with Part 15 of the FCC Rules. Operation is subject to the following two conditions: (1) this device may not cause harmful interference, and (2) this device must accept any interference received, including interference that may cause undesired operation.

**Canada**

This device complies with RSS-210 of Industry Canada. Operation is subject to the following two conditions: (1) this device may not cause interference, and (2) this device must accept any interference, including interference that may cause undesired operation of the device.

CAUTION

**■Certifications for the immobilizer system**

Changes or modifications not expressly approved by the party responsible for compliance could void the user's authority to operate the equipment.

NOTICE

**■To ensure the system operates correctly**

Do not modify or remove the system. If modified or removed, the proper operation of the system cannot be guaranteed.

# Alarm*

**The system sounds the alarm and flashes the lights when forced entry is detected.**

## ■ Triggering of the alarm

The alarm is triggered in the following situations:

- A locked door is unlocked or opened in any way other than using the entry function, wireless remote control or mechanical key with the alarm being set. (The doors will lock again automatically.)
- The hood is opened with the alarm being set.

## ■ Setting the alarm system

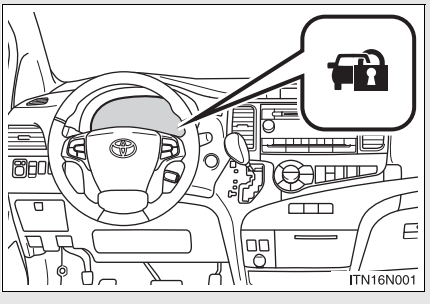


Close the doors and hood, and lock all doors. The system will be set automatically after 30 seconds.

The indicator light changes from being on to flashing when the system is set.

## ■ Deactivating or stopping the alarm

Do one of the following to deactivate or stop the alarm:

- Unlock the doors.
- Vehicles without a smart key system: Turn the engine switch to the “ACC” or “ON” position, or start the engine.
  Vehicles with a smart key system: Turn the “ENGINE START STOP” switch to ACCESSORY or IGNITION ON mode, or start the engine.
  (The alarm will be deactivated or stopped after a few seconds.)

*: If equipped

### System maintenance

The vehicle has a maintenance-free type alarm system.

### Items to check before locking the vehicle

To prevent unexpected triggering of the alarm and vehicle theft, make sure of the following:

- Nobody is in the vehicle.
- The windows and moon roof are closed before the alarm is set.
- No valuables or other personal items are left in the vehicle.

### Triggering of the alarm

The alarm may be triggered in the following situations.
(Stopping the alarm deactivates the alarm system.)

- A person inside the vehicle opens a door or hood.

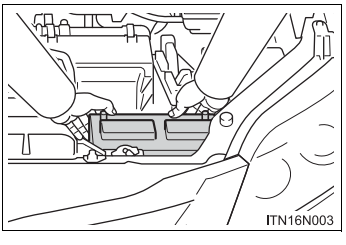


- The battery is recharged or replaced when the vehicle is locked.

NOTICE

### To ensure the system operates correctly

Do not modify or remove the system. If modified or removed, the proper operation of the system cannot be guaranteed.

# Theft prevention labels (for U.S.A.)

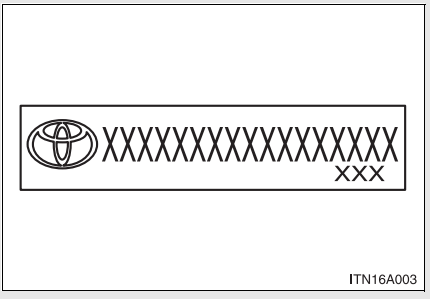


These labels are attached to the vehicle to reduce vehicle theft by facilitating the tracing and recovery of parts from stolen vehicles. Do not remove under penalty of law.

# Correct driving posture

**Drive with a good posture as follows:**

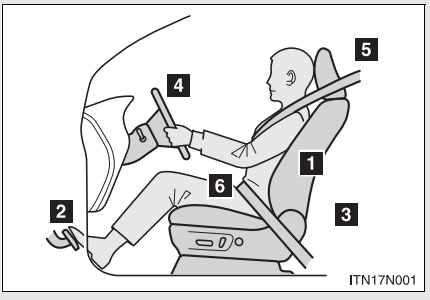


1. Sit upright and well back in the seat. (→P. 89)
2. Adjust the position of the seat forward or backward to ensure the pedals can be reached and easily depressed to the extent required. (→P.89)
3. Adjust the seatback so that the controls are easily operable. (→P.122)
4. Adjust the tilt and telescopic positions of the steering wheel downward so the airbag is facing your chest. (→P.131)
5. Lock the head restraint in place with the center of the head restraint closest to the top of your ears. (→P.119)
6. Wear the seat belt correctly. (→P.122)

CAUTION

■ **While driving**

- Do not adjust the position of the driver's seat.
  Doing so could cause the driver to lose control of the vehicle.
- Do not place a cushion between the driver or passenger and the seatback.
  A cushion may prevent correct posture from being achieved, and reduce the effectiveness of the seat belt and head restraint, increasing the risk of death or serious injury to the driver or passenger.
- Do not place anything under the front seats except for putting them in the auxiliary box.
  Objects placed under the front seats may become jammed in the seat tracks and stop the seat from locking in place. This may lead to an accident, resulting in death or serious injury. The adjustment mechanism may also be damaged.

■ **Adjusting the seat position**

- Take care when adjusting the seat position to ensure that other passengers are not injured by the moving seat.
- Do not put your hands under the seat or near the moving parts to avoid injury.
  Fingers or hands may become jammed in the seat mechanism.

**The SRS airbags inflate when the vehicle is subjected to certain types of severe impacts that may cause significant injury to the occupants. They work together with the seat belts to help reduce the risk of death or serious injury.**

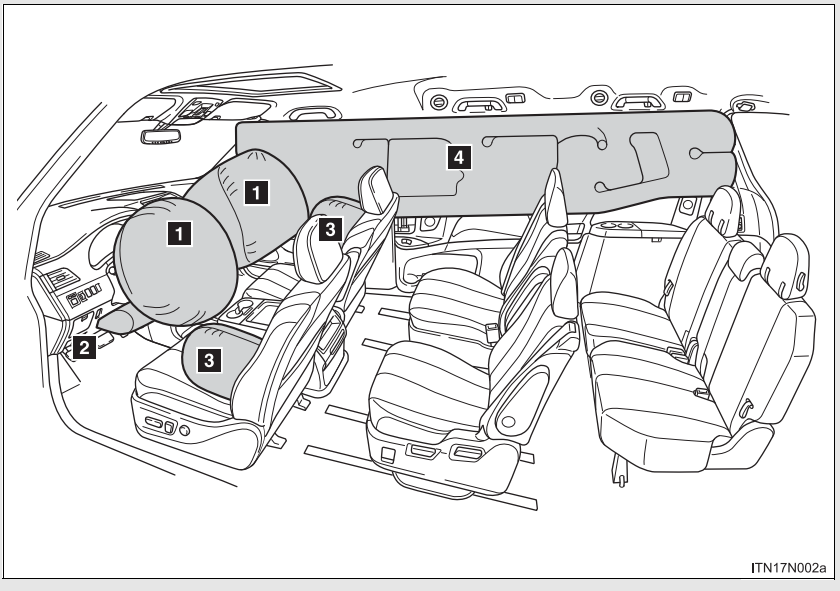


**SRS front airbags**

1 SRS driver airbag/front passenger airbag
Can help protect the head and chest of the driver and front passenger from impact with interior components.

2 SRS driver knee airbag
Can help provide driver protection.

**SRS side and curtain shield airbags**

3 SRS side airbags
Can help protect the torsos of the front seat occupants.

4 SRS curtain shield airbags
Can help protect primarily the heads of occupants in the outer seats.

## Airbag system components

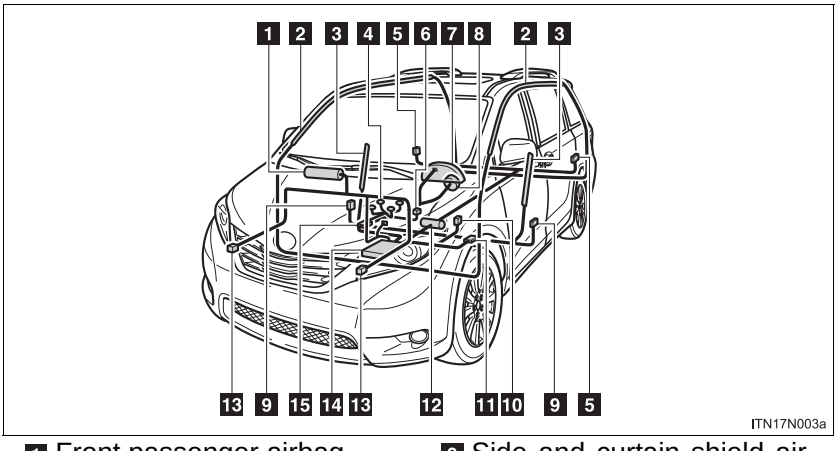


1. Front passenger airbag
2. Curtain shield airbags
3. Side airbags
4. Front passenger occupant classification system (ECU and sensors)
5. Curtain shield airbag sensors
6. Front passenger's seat belt buckle switch
7. SRS warning light
8. Driver airbag
9. Side and curtain shield airbag sensors
10. Driver's seat belt buckle switch
11. Driver's seat position sensor
12. Driver knee airbag
13. Front airbag sensors
14. Airbag sensor assembly
15. "AIR BAG ON" and "AIR BAG OFF" indicator lights

Your vehicle is equipped with ADVANCED AIRBAGS designed based on US motor vehicle safety standards (FMVSS208). The airbag system controls airbag deployment power for the driver and front passenger. The driver airbag system consists of the driver seat's position sensor etc. The front passenger's airbag system consists of the front passenger occupant classification sensor etc.

The main SRS airbag system components are shown above. The SRS airbag system is controlled by the airbag sensor assembly. The airbag sensor assembly consists of a safing sensor and an airbag sensor.

In certain types of severe frontal or side impacts, the SRS airbag system triggers the airbag inflators. A chemical reaction in the inflators quickly fills the airbags with non-toxic gas to help restrain the motion of the occupants.

---

### ■ If the SRS airbags deploy (inflate)

- Bruising and slight abrasions may result from contact with a deploying (inflating) SRS airbag.
- A loud noise and white powder will be emitted.
- Parts of the airbag module (steering wheel hub, airbag cover and inflator) as well as the front seats, and parts of the front and rear pillars and roof side rail, may be hot for several minutes. The airbag itself may also be hot.
- The windshield may crack.
- For Safety Connect subscribers, if the SRS airbags deploy or in the event of a severe rear-end collision, the system is designed to send an emergency call to the response center, notifying them of the vehicle's location (without needing to push the "SOS" button) and an agent will attempt to speak with the occupants to ascertain the level of emergency and assistance required. If the occupants are unable to communicate, the agent automatically treats the call as an emergency and helps to dispatch the necessary emergency services. (→P.578)

### ■SRS airbag deployment conditions (SRS front airbags)

- The SRS front airbag will deploy in the event of an impact that exceeds the set threshold level (the level of force corresponding to an approximately 12 - 18 mph [20 - 30 km/h] frontal collision with a fixed wall that does not move or deform).

  However, this threshold velocity will be considerably higher if the vehicle strikes an object, such as a parked vehicle or sign pole, which can move or deform on impact, or if the vehicle is involved in an underride collision (e.g. a collision in which the front of the vehicle “underrides”, or goes under, the bed of a truck, etc.).

- It is possible that in some collisions where the forward deceleration of the vehicle is very close to the designed threshold level, the SRS front airbags and the seat belt pretensioners may not activate together.

- The SRS front passenger airbag will not activate if there is no passenger sitting in the front passenger seat. However, the front passenger airbag may deploy if luggage is put in the seat, or the seat belt is fastened, even if the seat is unoccupied. (→P. 172)

### ■SRS airbag deployment conditions (SRS side and curtain shield airbags)

- The SRS side and curtain shield airbags will deploy in the event of an impact that exceeds the set threshold level (the level of force corresponding to the impact force produced by an approximately 3300 lb. [1500 kg] vehicle colliding with the vehicle cabin from a direction perpendicular to the vehicle orientation at an approximately speed of 12 - 18 mph [20 - 30 km/h]).

- The SRS side airbag on the passenger seat will not activate if there is no passenger sitting in the front passenger seat. However, the side airbag on the passenger seat may deploy if luggage is put in the seat, even if the seat is unoccupied. (→P. 172)

### Conditions under which the SRS airbags may deploy (inflate), other than a collision

The SRS front airbags may also deploy if a serious impact occurs to the underside of your vehicle. Some examples are shown in the illustration.

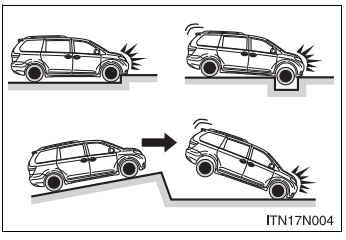


- Hitting a curb, edge of pavement or hard surface
- Falling into or jumping over a deep hole
- Landing hard or falling

### Types of collisions that may not deploy the SRS front airbag (SRS front airbags)

The SRS front airbags are generally not designed to inflate if the vehicle is involved in a side or rear collision, if it rolls over, or if it is involved in a low-speed frontal collision. But, whenever a collision of any type causes sufficient forward deceleration of the vehicle, deployment of the SRS front airbags may occur.

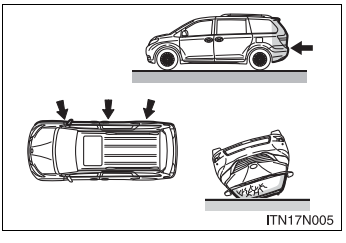


- Collision from the side
- Collision from the rear
- Vehicle rollover

### Types of collisions that may not deploy the SRS airbags (SRS side airbags and curtain shield airbags)

The SRS side airbag and curtain shield airbag system may not activate if the vehicle is subjected to a collision from the side at certain angles, or a collision to the side of the vehicle body other than the passenger compartment.

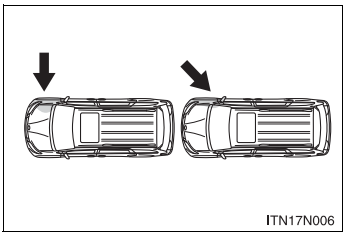


- Collision from the side to the vehicle body other than the passenger compartment
- Collision from the side at an angle

The SRS side airbags and curtain shield airbags are generally not designed to inflate if the vehicle is involved in a frontal or rear collision, if it rolls over, or if it is involved in a low-speed side collision.

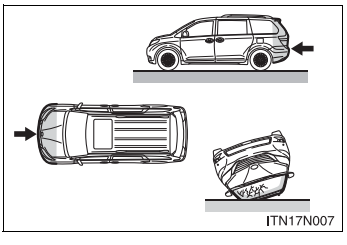


- Collision from the front*
- Collision from the rear
- Vehicle rollover

*: Depending on the conditions and type of accident, there are times when the curtain shield airbags may deploy (inflate) in front impact.

## ■When to contact your Toyota dealer

In the following cases, contact your Toyota dealer as soon as possible. Do not disconnect the battery cables before contacting your Toyota dealer.

- Any of the SRS airbags have been inflated.

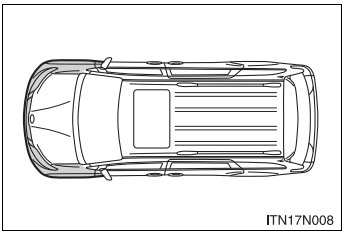


- The front of the vehicle is damaged or deformed, or was involved in an accident that was not severe enough to cause the SRS airbags to inflate.

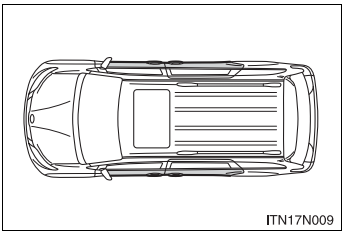


- A portion of a door is damaged or deformed, or the vehicle was involved in an accident that was not severe enough to cause the SRS side airbags and curtain shield airbags to inflate.

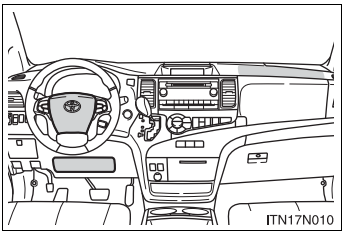


- The pad section of the steering wheel, dashboard near the front passenger airbag cover or lower portion of the instrument panel is scratched, cracked, or otherwise damaged.

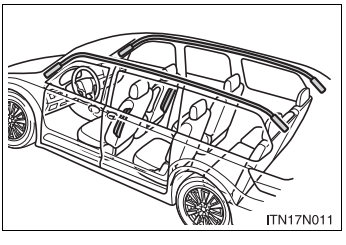


- The surface of the seats with the side airbag is scratched, cracked or otherwise damaged.
- The portion of the front pillars, rear pillars or roof side rail garnishes (padding) containing the curtain shield airbags inside is scratched, cracked or otherwise damaged.

CAUTION

**SRS airbag precautions**

Observe the following precautions regarding the airbags.
Failure to do so may cause death or serious injury.

- The driver and all passengers in the vehicle must wear their seat belts properly.
  The SRS airbags are supplemental devices to be used with the seat belts.
- The SRS driver airbag deploys with considerable force, and can cause death or serious injury especially if the driver is very close to the airbag. The National Highway Traffic Safety Administration (“NHTSA”) advises:

  Since the risk zone for the driver’s airbag is the first 2 - 3 in. (50 - 75 mm) of inflation, placing yourself 10 in. (250 mm) from your driver airbag provides you with a clear margin of safety. This distance is measured from the center of the steering wheel to your breastbone. If you sit less than 10 in. (250 mm) away now, you can change your driving position in several ways:

  - Move your seat to the rear as far as you can while still reaching the pedals comfortably.
  - Slightly recline the back of the seat.
    Although vehicle designs vary, many drivers can achieve the 10 in. (250 mm) distance, even with the driver seat all the way forward, simply by reclining the back of the seat somewhat. If reclining the back of your seat makes it hard to see the road, raise yourself using a firm, non-slippery cushion, or raise the seat if your vehicle has that feature.
  - If your steering wheel is adjustable, tilt it downward. This points the airbag toward your chest instead of your head and neck.

  The seat should be adjusted as recommended by NHTSA above, while still maintaining control of the foot pedals, steering wheel, and your view of the instrument panel controls.

CAUTION

■ **SRS airbag precautions**

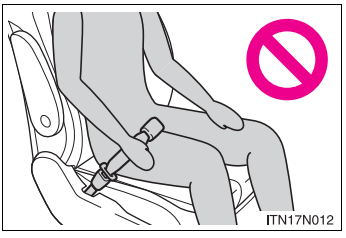


- If the seat belt extender has been connected to the driver's seat belt buckle but the seat belt extender has not also been fastened to the latch plate of the driver's seat belt, the SRS driver's airbag system will judge that the driver is wearing the seat belt even though the seat belt has not been connected. In this case, the driver's airbag may not activate correctly in a collision, resulting in death or serious injury in the event of collision. Be sure to wear the seat belt with the seat belt extender.

- The SRS front passenger airbag also deploys with considerable force, and can cause death or serious injury especially if the front passenger is very close to the airbag. The front passenger seat should be as far from the airbag as possible with the seatback adjusted, so the front passenger sits upright.
- Improperly seated and/or restrained infants and children can be killed or seriously injured by a deploying airbag. An infant or child who is too small to use a seat belt should be properly secured using a child restraint system. Toyota strongly recommends that all infants and children be placed in the rear seats of the vehicle and properly restrained. The rear seats are safer for infants and children than the front passenger seat. (→P.178)

CAUTION

## SRS airbag precautions

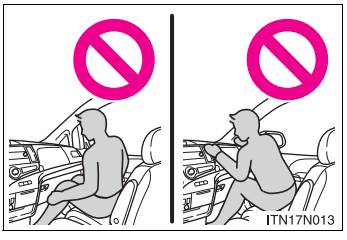


- Do not sit on the edge of the seat or lean against the dashboard.

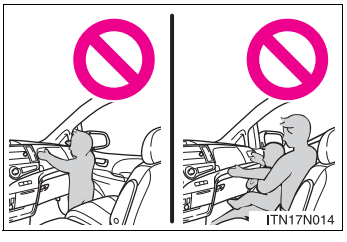


- Do not allow a child to stand in front of the SRS front passenger airbag unit or sit on the knees of a front passenger.
- Do not allow the front seat occupants to hold items on their knees.

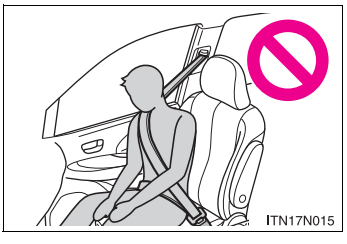


- Do not lean against the door, the roof side rail or the front, side and rear pillars.

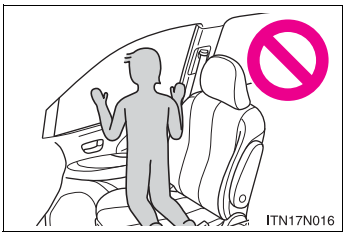


- Do not allow anyone to kneel on the passenger seat toward the door or put their head or hands outside the vehicle.

CAUTION

## SRS airbag precautions

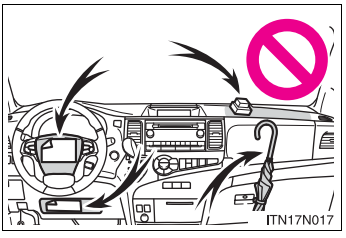


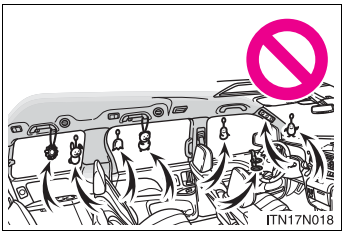


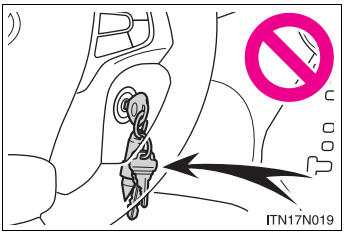


- Do not attach anything to or lean anything against areas such as the dashboard or steering wheel pad and lower portion of the instrument panel.
  These items can become projectiles when SRS driver, front passenger and knee airbags deploy.
- Do not attach anything to areas such as the door, windshield glass, side door glass, front or side pillars, roof side rail or assist grip.
- Do not hang coat hangers or other hard objects on the coat hooks. All of these items could become projectiles and may cause death or serious injury, should the SRS curtain shield airbag deploy.
- Vehicles without a smart key system: Do not attach any heavy, sharp or hard objects such as keys and accessories to the key. The objects may restrict the SRS knee airbag inflation or be thrust into the driver's seat area by the force of the deploying airbag, thus causing a danger.

CAUTION

**SRS airbag precautions**

- If a vinyl cover is put on the area where the SRS knee airbag will deploy, be sure to remove it.
- Do not use seat accessories which cover the parts where the SRS side airbags inflate as they may interfere with inflation of the airbags. Such accessories may prevent the side airbags from activating correctly, disable the system or cause the side airbags to inflate accidentally, resulting in death or serious injury.
- Do not strike or apply significant levels of force to the area of the SRS airbag components.
  Doing so can cause the SRS airbags to malfunction.
- Do not touch any of the component parts immediately after the SRS airbags have deployed (inflated) as they may be hot.
- If breathing becomes difficult after the SRS airbag has deployed, open a door or window to allow fresh air in, or leave the vehicle if it is safe to do so. Wash off any residue as soon as possible to prevent skin irritation.
- If the areas where the SRS airbags are stored, such as the steering wheel pad and front and rear pillar garnishes, are damaged or cracked, have them replaced by your Toyota dealer.

CAUTION

**Modification and disposal of SRS airbag system components**

Do not dispose of your vehicle or perform any of the following modifications without consulting your Toyota dealer.
The SRS airbags may malfunction or deploy (inflate) accidentally, causing death or serious injury.

- Installation, removal, disassembly and repair of the SRS airbags.
- Repairs, modifications, removal or replacement of the steering wheel, instrument panel, dashboard, seats or seat upholstery, front, side and rear pillars or roof side rails.
- Repairs or modifications of the front fender, front bumper, or side of the occupant compartment.
- Installation of snow plows, winches, etc. to the front grille (bull bars, kangaroo bar etc.).
- Modifications to the vehicle's suspension system.
- Installation of electronic devices such as mobile two-way radios or CD players.
- Modifications to your vehicle for a person with a physical disability.

# Front passenger occupant classification system

**Your vehicle is equipped with a front passenger occupant classification system. This system detects the conditions of the front passenger seat and activates or deactivates the devices for the front passenger.**

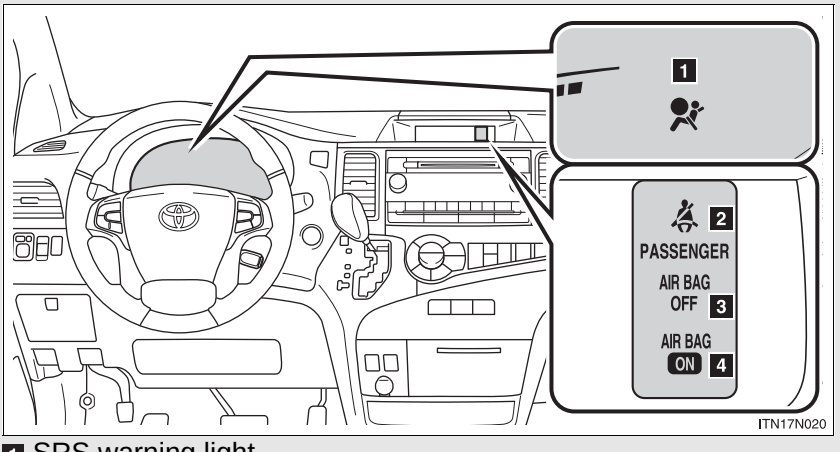


1 SRS warning light

2 Front passenger's seat belt reminder light

3 "AIR BAG OFF" indicator light

4 "AIR BAG ON" indicator light

## Conditions and operation of the front passenger occupant classification system

### ■ Adult*1

| | | |
|---|---|---|
| Indicator/ warning light | “AIR BAG ON” and “AIR BAG OFF” indicator lights | “AIR BAG ON” |
| | SRS warning light | Off |
| | Front passenger’s seat belt reminder light | Flashing*2 |
| Devices | Front passenger airbag | Activated |
| | Side airbag on the front passenger seat | |
| | Curtain shield airbag in the front passenger side | |
| | Front passenger’s seat belt pretensioner | |

### ■ Child*3 or child restraint system*4

| | | |
|---|---|---|
| Indicator/ warning light | “AIR BAG ON” and “AIR BAG OFF” indicator lights | “AIR BAG OFF”*5 |
| | SRS warning light | Off |
| | Front passenger’s seat belt reminder light | Flashing*2 |
| Devices | Front passenger airbag | Deactivated |
| | Side airbag on the front passenger seat | Activated |
| | Curtain shield airbag in the front passenger side | |
| | Front passenger’s seat belt pretensioner | |

### Unoccupied

| | | |
|---|---|---|
| Indicator/ warning light | “AIR BAG ON” and “AIR BAG OFF” indicator lights | Not illuminated |
| | SRS warning light | Off |
| | Front passenger’s seat belt reminder light | |
| Devices | Front passenger airbag | Deactivated |
| | Side airbag on the front passenger seat | Activated |
| | Curtain shield airbag in the front passenger side | |
| | Front passenger’s seat belt pretensioner | Deactivated |

### There is a malfunction in the system

| | | |
|---|---|---|
| Indicator/ warning light | “AIR BAG ON” and “AIR BAG OFF” indicator lights | “AIR BAG OFF” |
| | SRS warning light | On |
| | Front passenger’s seat belt reminder light | Off |
| Devices | Front passenger airbag | Deactivated |
| | Side airbag on the front passenger seat | Activated |
| | Curtain shield airbag in the front passenger side | |
| | Front passenger’s seat belt pretensioner | |

*1: The system judges a person of adult size as an adult. When a smaller adult sits in the front passenger seat, the system may recognize him/her as a child depending on his/her physique and posture.

*2: In the event the front passenger does not wear a seat belt.

*3: When a larger child who has outgrown a child restraint system sits in the front passenger seat, the system may recognize him/her as an adult depending on his/her physique or posture.

*4: Never install a rear-facing child restraint system on the front passenger seat. A forward-facing child restraint system should only be installed on the front passenger seat when it is unavoidable. (→P.179)

*5: In case the indicator light is not illuminated, consult this manual on how to install the child restraint system properly. (→P.182)

CAUTION

**Front passenger occupant classification system precautions**

Observe the following precautions regarding the front passenger occupant classification system.
Failure to do so may cause death or serious injury.

- Wear the seat belt properly.
- Make sure the front passenger's seat belt plate has not been left inserted into the buckle before someone sits in the front passenger seat.
- Make sure the "AIR BAG OFF" indicator light is not illuminated when using the seat belt extender for the front passenger seat. If the "AIR BAG OFF" indicator light is illuminated, disconnect the extender tongue from the seat belt buckle, then reconnect the seat belt. Reconnect the seat belt extender after making sure the "AIR BAG ON" indicator light is illuminated. If you use the seat belt extender while the "AIR BAG OFF" indicator light is illuminated, the front passenger airbag and side airbag on the front passenger side may not activate correctly, which could cause death or serious injury in the event of collision.
- Do not apply a heavy load to the front passenger seat or equipment (e.g. seatback pocket).
- Do not put weight on the front passenger seat by putting your hands or feet on the front passenger seat seatback from the rear passenger seat.
- Do not let a rear passenger lift the front passenger seat with their feet or press on the seatback with their legs.
- Do not put objects under the front passenger seat.
- Do not recline the front passenger seatback so far that it touches a rear seat. This may cause the "AIR BAG OFF" indicator light to be illuminated, which indicates that the passenger's airbags will not deploy in the event of a severe accident. If the seatback touches the rear seat, return the seatback to a position where it does not touch the rear seat. Keep the front passenger seatback as upright as possible when the vehicle is moving. Reclining the seatback excessively may lessen the effectiveness of the seat belt system.

CAUTION

■ **Front passenger occupant classification system precautions**

- If an adult sits in the front passenger seat, the “AIR BAG ON” indicator light is illuminated. If the “AIR BAG OFF” indicator is illuminated, ask the passenger to sit up straight, well back in the seat, feet on the floor, and with the seat belt worn correctly. If the “AIR BAG OFF” indicator still remains illuminated, either ask the passenger to move to the rear seat, or if that is not possible, move the front passenger seat fully rearward.
- When it is unavoidable to install the forward-facing child restraint system on the front passenger seat, install the child restraint system on the front passenger seat in the proper order. (→P.182)
- Do not modify or remove the front seats.
- Do not kick the front passenger seat or subject it to severe impact. Otherwise, the SRS warning light may come on to indicate a malfunction of the detection system. In this case, contact your Toyota dealer immediately.
- Child restraint systems installed on the rear seat should not contact the front seatbacks.
- Do not use a seat accessory, such as a cushion or seat cover, that covers the seat cushion surface.
- Do not modify or replace the upholstery of the front seat.

**A child restraint system for a small child or baby must itself be properly restrained on the seat with the lap portion of the lap/shoulder belt.**

**The laws of all 50 states of U.S.A. and Canada now require the use of child restraint systems.**

## Points to remember

Studies have shown that installing a child restraint system on a rear seat is much safer than installing one on the front passenger seat.

- Choose a child restraint system that suits your vehicle and is appropriate to the age and size of the child.
- For installation details, follow the instructions provided with the child restraint system.
  General installation instructions are provided in this manual.
  (→P.182)

## Types of child restraints

Child restraint systems are classified into the following 3 types according to the age and size of the child:



**Rear facing — Infant seat/convertible seat**

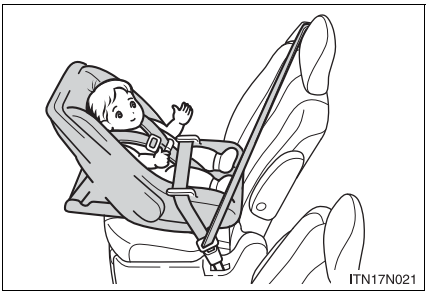


**Forward facing — Convertible seat**

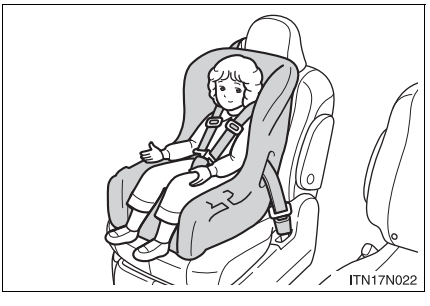


**Booster seat**

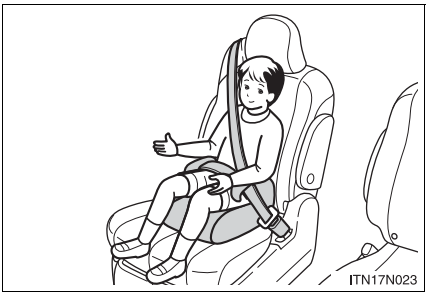

### Selecting an appropriate child restraint system

- Use a child restraint system appropriate for the child until the child becomes large enough to properly wear the vehicle's seat belt.
- If the child is too large for a child restraint system, sit the child on a rear seat and use the vehicle's seat belt. (→P. 122)

**CAUTION**

### Child restraint precautions

- For effective protection in automobile accidents and sudden stops, a child must be properly restrained, using a seat belt or child restraint system depending on the age and size of the child. Holding a child in your arms is not a substitute for a child restraint system. In an accident, the child can be crushed against the windshield, or between you and the vehicle's interior.
- Toyota strongly urges the use of a proper child restraint system that conforms to the size of the child, installed on the rear seat. According to accident statistics, the child is safer when properly restrained in the rear seat than in the front seat.
- Never install a rear-facing child restraint system on the front passenger seat even if the "AIR BAG OFF" indicator light is illuminated. In the event of an accident, the force of the rapid inflation of the front passenger airbag can cause death or serious injury to the child if the rear-facing child restraint system is installed on the front passenger seat.
- A forward-facing child restraint system may be installed on the front passenger seat only when it is unavoidable. A child restraint system that requires a top tether strap should not be used in the front passenger seat since there is no top tether strap anchor for the front passenger seat. Adjust the seatback as uprights as possible and always move the seat as far back as possible even if the "AIR BAG OFF" indicator light is illuminated, because the front passenger airbag could inflate with considerable speed and force. Otherwise, the child may be killed or seriously injured.

CAUTION

■ **Child restraint precautions**

- Do not use the seat belt extender when installing a child restraint system on the front or rear passenger seat. If installing a child restraint system with the seat belt extender connected to the seat belt, the seat belt will not securely hold the child restraint system, which could cause death or serious injury to the child or other passengers in the event of a sudden stop, sudden swerve or accident.
- Do not allow the child to lean his/her head or any part of his/her body against the side door or the area of the seat, front and side pillars or roof side rail from which the SRS side airbags or curtain shield airbags deploy even if the child is seated in the child restraint system. It is dangerous if the SRS side airbags and curtain shield airbags inflate, and the impact could cause death or serious injury to the child.
- Make sure you have complied with all installation instructions provided by the child restraint manufacturer and that the system is properly secured. If it is not secured properly, it may cause death or serious injury to the child in the event of a sudden stop, sudden swerve or accident.

■ **Child restraint lock function belt precaution**

Do not allow children to play with the child restraint lock function belt. If the belt becomes twisted around a child's neck, it will not be possible to pull the belt out leading to choking or other serious injuries that could result in death. If this occurs and the buckle cannot be unfastened, scissors should be used to cut the belt.

■ **When the child restraint system is not in use**

- Keep the child restraint system properly secured on the seat even if it is not in use.
  Do not store the restraint unsecured in the passenger compartment.
- If it is necessary to detach the child restraint system, remove it from the vehicle or store it securely in the luggage compartment. This will prevent it from injuring passengers in the event of a sudden stop, sudden swerve or accident.

**Follow the child restraint system manufacturer's instructions. Firmly secure child restraints to the rear seats using the LATCH anchors or a seat belt. Attach the top tether strap when installing a child restraint.**

**The lap/shoulder belt can be used if your child restraint system is not compatible with the LATCH (Lower Anchors and Tethers for Children) system.**

## ■ Using the LATCH anchors

### Second seats (8-passenger models)

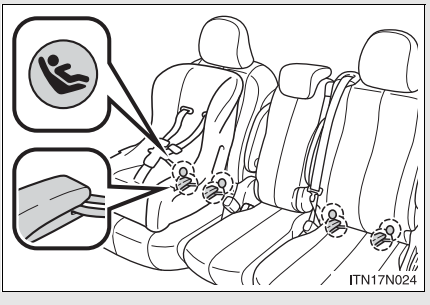


Child restraint LATCH anchors

LATCH anchors are provided for second outside seats. (Buttons displaying the location of the anchors are attached to the seats.)

### Second seats (7-passenger models)

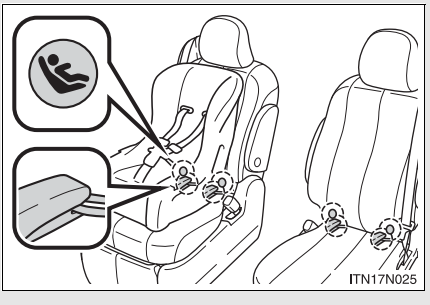


Child restraint LATCH anchors

LATCH anchors are provided for both second seats. (Buttons displaying the location of the anchors are attached to the seats.)

**Third seats**

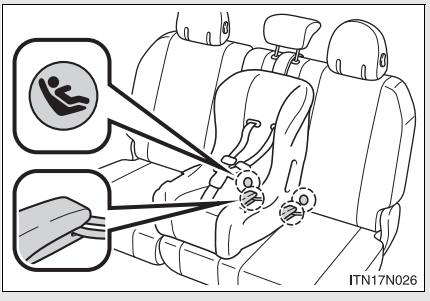


Child restraint LATCH anchors

LATCH anchors are provided for center seat. (Buttons displaying the location of the anchors are attached to the seats.)

## ■ Using the seat belts

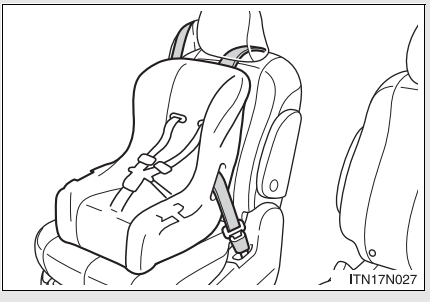


Seat belts equipped with a child restraint locking mechanism (ALR/ELR belts except driver's seat belt) (→P. 126)

## ■ Using the top tether strap

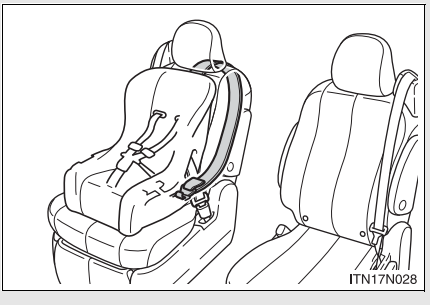


Anchor brackets (for top tether strap)

**Second seats (8-passenger models)**

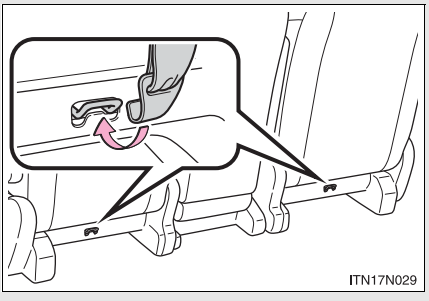


Anchor brackets are provided for second outside seats.

**Second seats (7-passenger models)**

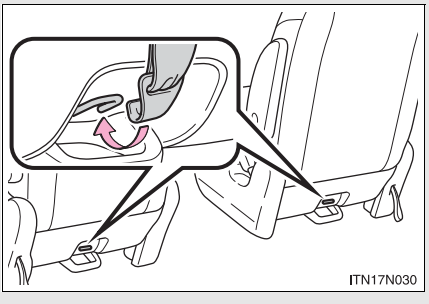


Anchor brackets are provided for both second seats.

**Third seats**

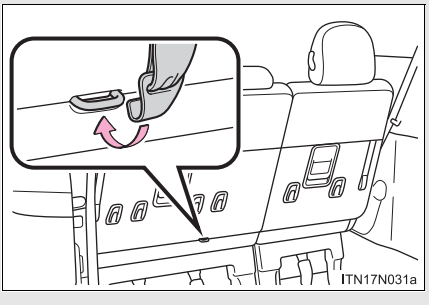


Anchor brackets are provided for center seat.

## Installation with LATCH system (second seat)

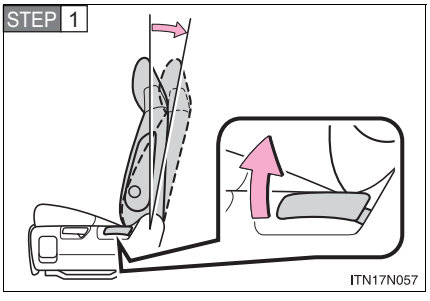


Fold the seatback while pulling the lever and move to the rear-most recline position.

STEP 2 Widen the gap between the seat cushion and seatback slightly.

**Type A**

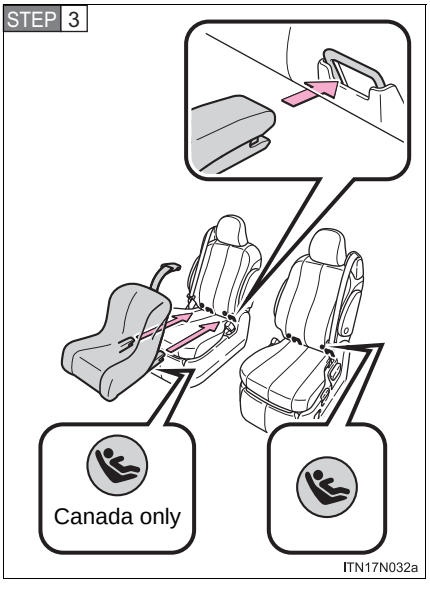


Latch the buckles onto the LATCH anchors. If the child restraint has a top tether strap, the top tether strap should be latched onto the top tether strap anchor.

For owners in Canada:
The symbol on a child restraint system indicates the presence of a lower connector system.

**Type B**

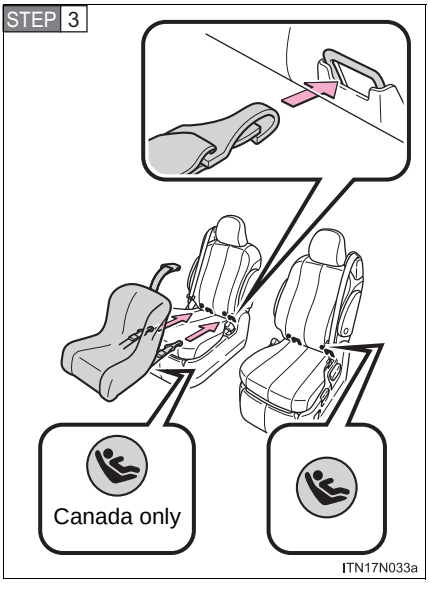


Latch the hooks of the lower straps onto the LATCH anchors. If the child restraint has a top tether strap, the top tether strap should be latched onto the top tether strap anchor.

For owners in Canada:
The symbol on a child restraint system indicates the presence of a lower connector system.

## Installation with LATCH system (third seat)

### Manual seat

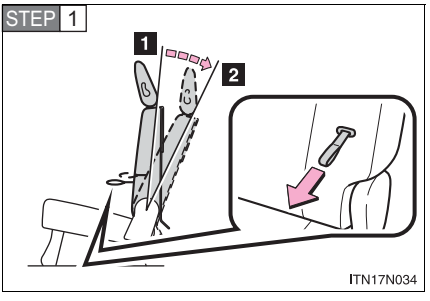


1 1st lock position

2 11th lock position

Fold the seatback while pulling the strap. Return the seatback and secure it at the 1st lock position (most upright position). Adjust the seatback to the 11th lock position.

### Power seat

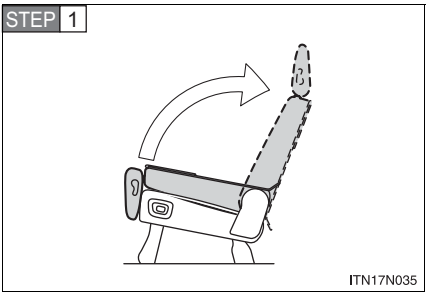


Fold down the seatback by pressing the folding/returning switch (→P.104). Raise the seatback by pressing the same switch, the returning switch (→P.108) or the seatback angle adjustment switch (→P.95). (The seatback will automatically stop.) Do not touch the switch while the seatback is moving, because the operation will stop.

STEP 2 Widen the gap between the seat cushion and seatback slightly.

**Type A**

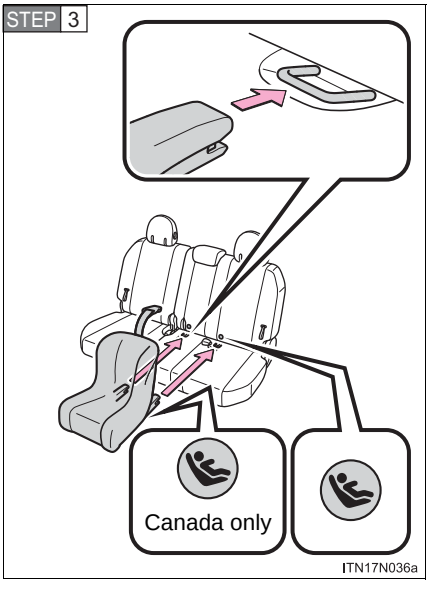


Latch the buckles onto the LATCH anchors. If the child restraint has a top tether strap, the top tether strap should be latched onto the top tether strap anchor.

For owners in Canada:
The symbol on a child restraint system indicates the presence of a lower connector system.

**Type B**

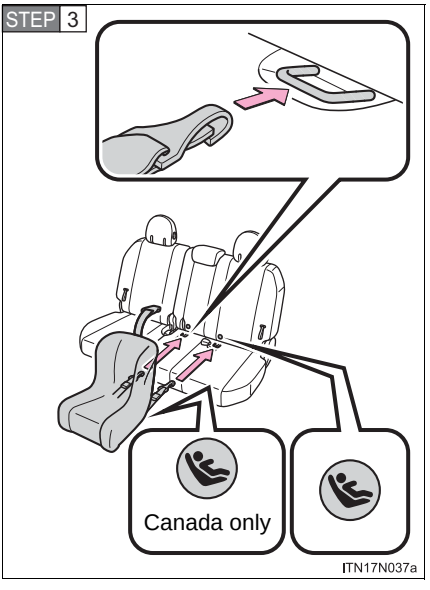


Latch the hooks of the lower straps onto the LATCH anchors. If the child restraint has a top tether strap, the top tether strap should be latched onto the top tether strap anchor.

For owners in Canada:
The symbol on a child restraint system indicates the presence of a lower connector system.

## Installing child restraints using a seat belt (child restraint lock function belt)

### ■ Rear facing — Infant seat/convertible seat

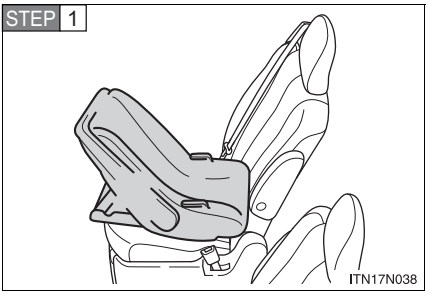


Place the child restraint system on the rear seat facing the rear of the vehicle.

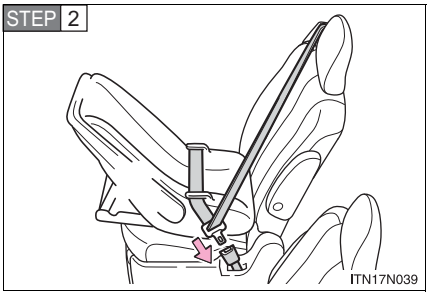


Run the seat belt through the child restraint system and insert the plate into the buckle. Make sure that the belt is not twisted.

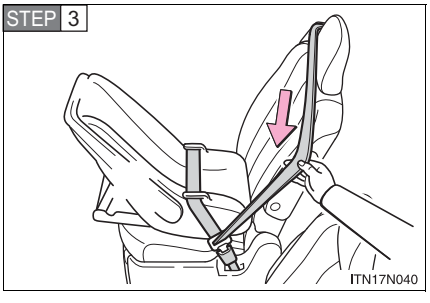


Fully extend the shoulder belt and allow it to retract to put it in lock mode. In lock mode, the belt cannot be extended.

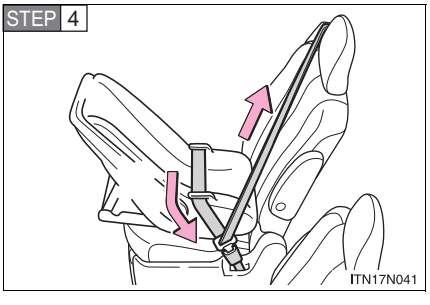


While pushing the child restraint system down into the rear seat, allow the shoulder belt to retract until the child seat is securely in place.

After the shoulder belt has retracted to a point where there is no slack in the belt, pull the belt to check that it cannot be extended.

## ■ Forward facing — Convertible seat

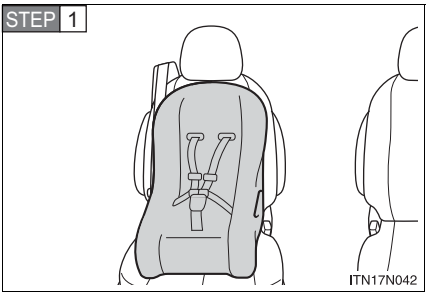


Place the child restraint system on the seat facing the front of the vehicle.

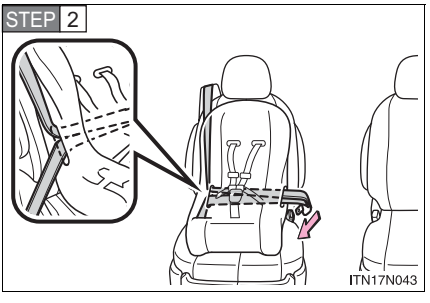


Run the seat belt through the child restraint system and insert the plate into the buckle. Make sure that the belt is not twisted.

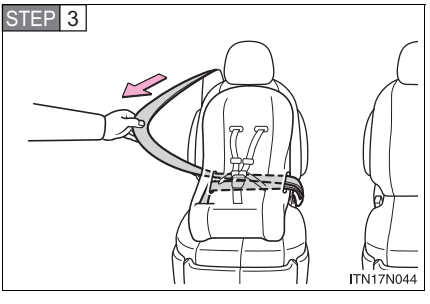


Fully extend the shoulder belt and allow it to retract to put it in lock mode. In lock mode, the belt cannot be extended.

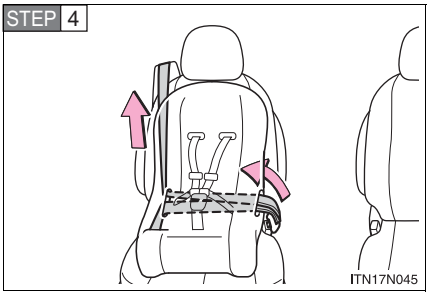


While pushing the child restraint system into the rear seat, allow the shoulder belt to retract until the child restraint system is securely in place.

After the shoulder belt has retracted to a point where there is no slack in the belt, pull the belt to check that it cannot be extended.

STEP 5 If the child restraint has a top tether strap, the top tether strap should be latched onto the top tether strap anchor.
(→P. 193, 194)

## ■ Booster seat

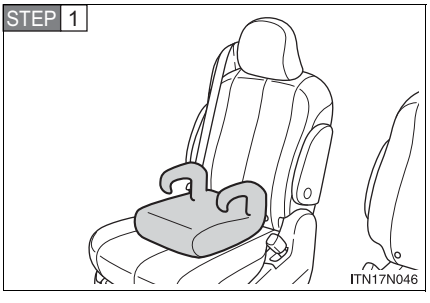


Place the child restraint system on the seat facing the front of the vehicle.

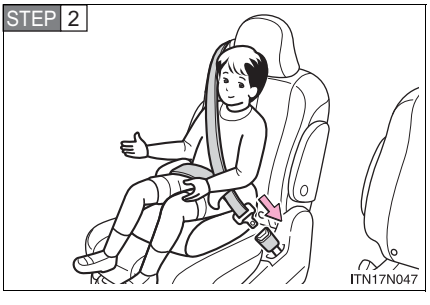


Sit the child in the child restraint system. Fit the seat belt to the child restraint system according to the manufacturer's instructions and insert the plate into the buckle. Make sure that the belt is not twisted.

Check that the shoulder belt is correctly positioned over the child's shoulder, and that the lap belt is as low as possible.
(→P. 122)

## Removing a child restraint installed with a seat belt

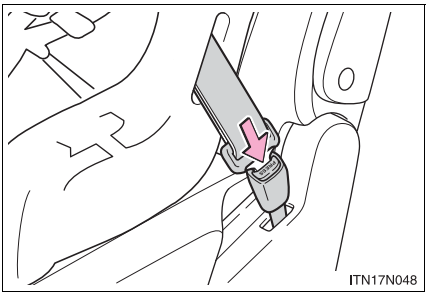


Push the buckle release button and fully retract the seat belt.

## Child restraint systems with a top tether strap (second seat)

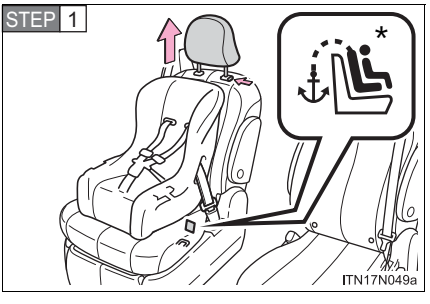


Secure the child restraint system using the seat belt or LATCH anchors, and adjust the head restraint to the uppermost position.

*: Ottoman seat only

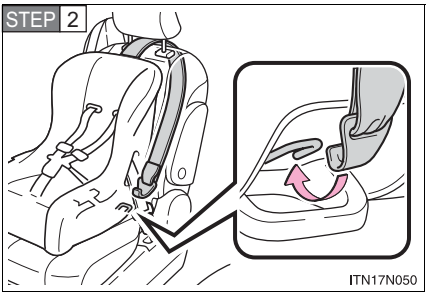


Latch the hook onto the anchor bracket and tighten the top tether strap.

Make sure the top tether strap is securely latched.

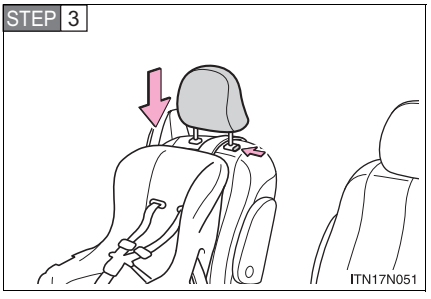


Adjust the head restraint to the downmost lock position.

## Child restraint systems with a top tether strap (third seat)

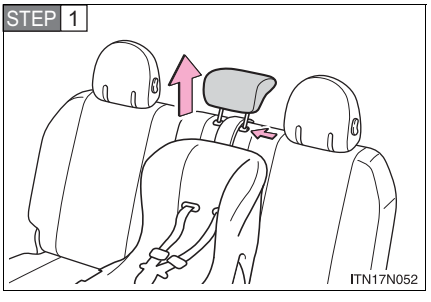


Secure the child restraint system using the seat belt or LATCH anchors. Adjust the head restraint to the uppermost position.

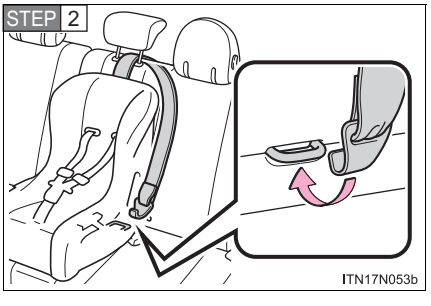


Latch the hook onto the anchor bracket and tighten the top tether strap.

Make sure the top tether strap is securely latched.

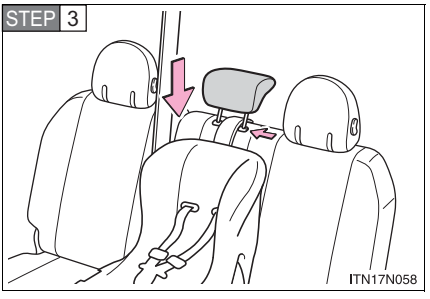


Adjust the head restraint to the downmost position.



### Laws and regulations pertaining to anchorages

The LATCH system conforms to FMVSS225 or CMVSS210.2.
Child restraint systems conforming to FMVSS213 or CMVSS213 specifications can be used.
This vehicle is designed to conform to the SAE J1819.

**CAUTION**

**When installing a booster seat**

To prevent the belt from going into ALR lock mode, do not fully extend the shoulder belt. ALR mode causes the belt to tighten only which could cause injury or discomfort to the child. (→P. 126)

CAUTION

**When installing a child restraint system**

Follow the directions given in the child restraint system installation manual and fix the child restraint system securely in place.
If the child restraint system is not correctly fixed in place, the child or other passengers may be seriously injured or even killed in the event of sudden braking, sudden swerving or an accident.

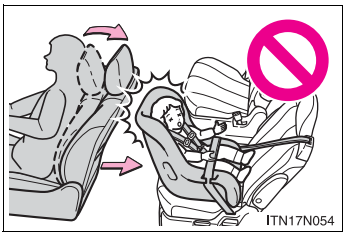


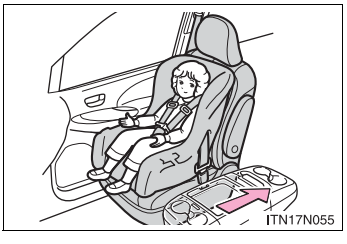


- If the driver's seat interferes with the child restraint system and prevents it from being attached correctly, attach the child restraint system to the right-hand rear seat.
- Adjust the front passenger seat or second seats so that it does not interfere with the child restraint system.
- Only put a forward-facing child restraint system on the front seat when unavoidable. When installing a forward-facing child restraint system on the front passenger seat, move the seat as far back as possible even if "AIR BAG OFF" indicator light is illuminated. Failing to do so may result in death or serious injury if the airbags deploy (inflate).

CAUTION

■ **When installing a child restraint system**

- When installing a child restraint system on the third center seat, adjust both seatbacks at the same angle. Otherwise, the child restraint system cannot be securely restrained and this may cause death or serious injuries in the event of sudden braking, sudden swerving or an accident.
- When using the LATCH anchors for a child restraint system, move the seat as far back as possible (second seat only), with the seatback close to the child restraint system.
- When a booster seat is installed, always ensure that the shoulder belt is positioned across the center of the child's shoulder. The belt should be kept away from the child's neck, but not so that it could fall off the child's shoulder. Failing to do so may result in death or serious injury in the event of sudden braking, sudden swerving or an accident.
- Ensure that the belt and plate are securely locked and the seat belt is not twisted.
- Push and pull the child restraint system from side to side and forward to be sure it is secure.
- After securing a child restraint system, never adjust the seat.
- Follow all installation instructions provided by the child restraint system manufacturer.

CAUTION

■ **When installing a child restraint system to the AUTO ACCESS SEAT (if equipped)**

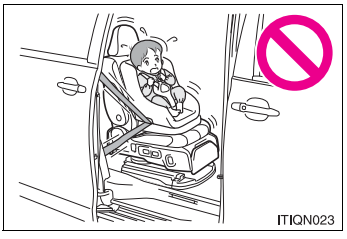

- Do not operate the AUTO ACCESS SEAT while a child restraint system is fixed to the seat by the child restraint lock function belt.
  If you force the seat operation, the seat, seat belt or child restraint system may be damaged, or may cause an injury.
- If a child restraint system is fixed to the AUTO ACCESS SEAT by the LATCH system, be careful that the child's head, hands and legs do not hit the body of the vehicle when operating the seat.
  Injuries may be caused.

■ **Do not use a seat belt extender**

If a seat belt extender is used when installing a child restraint system, the seat belt will not securely hold the child restraint system, which could cause death or serious injury to the child or other passengers in the event of sudden braking, sudden swerving or an accident.

■ **To correctly attach a child restraint system to the anchors**

When using the LATCH anchors, be sure that there are no foreign objects around the anchors and that the seat belt is not caught behind the child restraint. Make sure the child restraint system is securely attached, or it may cause death or serious injury to the child or other passengers in the event of a sudden braking, sudden swerving or an accident.

# When driving 2


**2-1. Driving procedures**

Driving the vehicle..... 200
Engine (ignition) switch (vehicles without smart key system)..... 212
Engine (ignition) switch (vehicles with smart key system)..... 215
Automatic transaxle ..... 221
Turn signal lever ..... 226
Parking brake..... 227
Horn ..... 228

**2-2. Instrument cluster and information display**

Gauges and meters ..... 229
Indicators and warning lights..... 232
Multi-information display..... 237

**2-3. Operating the lights and wipers**

Headlight switch..... 251
Automatic High Beam ..... 257
Fog light switch ..... 264
Windshield wipers and washer ..... 265
Rear window wiper and washer ..... 270

**2-4. Using other driving systems**

Cruise control..... 271
Dynamic radar cruise control ..... 275
Intuitive parking assist..... 288
Rear view monitor system ..... 295
Driving assist systems ..... 299
Hill-start assist control..... 305
PCS (Pre-Collision System) ... 307

**2-5. Driving information**

Cargo and luggage ..... 314
Vehicle load limits ..... 322
Winter driving tips ..... 324
Trailer towing ..... 328
Dinghy towing ..... 341

# Driving the vehicle

**The following procedures should be observed to ensure safe driving:**

## ■ Starting the engine

→P. 212

## ■ Driving

STEP 1 With the brake pedal depressed, shift the shift lever to D. (→P. 221)

STEP 2 Release the parking brake. (→P. 227)

STEP 3 Gradually release the brake pedal and gently depress the accelerator pedal to accelerate the vehicle.

## ■ Stopping

STEP 1 With the shift lever in D, depress the brake pedal.

STEP 2 If necessary, set the parking brake.

If the vehicle is to be stopped for an extended period of time, shift the shift lever to P or N. (→P. 221)

### ■ Parking the vehicle

STEP 1 With the shift lever in D, depress the brake pedal.

STEP 2 Set the parking brake. (→P. 227)

STEP 3 Shift the shift lever to P. (→P. 221)

If parking on a hill, block the wheels as needed.

STEP 4 Vehicles without a smart key system:
Turn the engine switch to the “LOCK” position and stop the engine.

Vehicles with a smart key system:
Press the “ENGINE START STOP” switch to stop the engine.

STEP 5 Lock the door, making sure that you have the key on your person.

## Starting off on a steep uphill

STEP 1 Make sure that the parking brake is set and shift the shift lever to D.

STEP 2 Gently depress the accelerator pedal.

STEP 3 Release the parking brake.

### Driving in the rain

- Drive carefully when it is raining, because visibility will be reduced, the windows may become fogged-up, and the road will be slippery.
- Drive carefully when it starts to rain, because the road surface will be especially slippery.
- Refrain from high speeds when driving on an expressway in the rain, because there may be a layer of water between the tires and the road surface, preventing the steering and brakes from operating properly.

### Breaking in your new Toyota

To extend the life of the vehicle, observing the following precautions is recommended:

- For the first 200 miles (300 km):
  Avoid sudden stops.
- For the first 500 miles (800 km):
  Do not tow a trailer.
- For the first 1000 miles (1600 km):
  - Do not drive at extremely high speeds.
  - Avoid sudden acceleration.
  - Do not drive continuously in low gears.
  - Do not drive at a constant speed for extended periods.

### Drum-in-disc type parking brake system

Your vehicle has a drum-in-disc type parking brake system. This type of brake system needs bedding-down of the brake shoes periodically or whenever the parking brake shoes and/or drum are replaced. Have your Toyota dealer perform the bedding down operation.

### Operating your vehicle in a foreign country

Comply with the relevant vehicle registration laws and confirm the availability of the correct fuel. (→P. 737)

## Eco-friendly driving

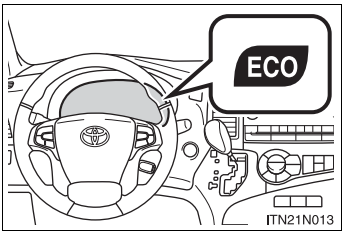


If Eco Driving Indicator Light comes on, it indicates that you are driving in an Eco-friendly driving. If the accelerator is over-used, causing the vehicle to exceed the Zone of Eco driving or the vehicle is stopped, Eco Driving Indicator Light will turn off. (When driving in D shift position.)



### CAUTION

**When starting the vehicle**

Always keep your foot on the brake pedal while stopped with the engine running. This prevents the vehicle from creeping.

**When driving the vehicle**

- Do not drive if you are unfamiliar with the location of the brake and accelerator pedals to avoid depressing the wrong pedal.
  - Accidentally depressing the accelerator pedal instead of the brake pedal will result in sudden acceleration that may lead to an accident that could result in death or serious injury.
  - When backing up, you may twist your body around, leading to a difficulty in operating the pedals. Make sure to operate the pedals properly.
  - Make sure to keep a correct driving posture even when moving the vehicle only slightly. This allows you to depress the brake and accelerator pedals properly.
  - Depress the brake pedal using your right foot. Depressing the brake pedal using your left foot may delay response in an emergency, resulting in an accident.

**CAUTION**

- Do not drive the vehicle over or stop the vehicle near flammable materials. The exhaust system and exhaust gases can be extremely hot. These hot parts may cause a fire if there is any flammable material nearby.
- Do not let the vehicle roll backward while the shift lever is in a driving position, or roll forward while the shift lever is in R. Doing so may cause the engine to stall or lead to poor brake and steering performance, resulting in an accident or damage to the vehicle.
- If the smell of exhaust is noticed inside the vehicle, open the windows and check that the back door is closed. Large amounts of exhaust in the vehicle can cause driver drowsiness and an accident, resulting in death or a serious health hazard. Have the vehicle inspected by your Toyota dealer immediately.
- Do not shift the shift lever to P while the vehicle is moving.
  Doing so can damage the transmission and may result in a loss of vehicle control.
- Do not shift the shift lever to R while the vehicle is moving forward.
  Doing so can damage the transmission and may result in a loss of vehicle control.
- Do not shift the shift lever to D while the vehicle is moving backward.
  Doing so can damage the transmission and may result in a loss of vehicle control.
- Moving the shift lever to N while the vehicle is moving will disengage the engine from the transmission. Engine braking is not available when N is selected.
- During normal driving, do not turn off the engine. Turning the engine off while driving will not cause loss of steering or braking control, but the power assist to these systems will be lost. This will make it more difficult to steer and brake, so you should pull over and stop the vehicle as soon as it is safe to do so.
  However, in the event of an emergency, such as if it becomes impossible to stop the vehicle in the normal way: →P. 681

**CAUTION**

- Use engine braking (downshift) to maintain a safe speed when driving down a steep hill.
  Using the brakes continuously may cause the brakes to overheat and lose effectiveness. (→P. 222)
- Do not adjust the position of the steering wheel, the seat, or the inside or outside rear view mirrors while driving.
  Doing so may result in a loss of vehicle control that can cause accidents, resulting in death or serious injury.
- Always check that all passengers' arms, heads or other parts of their body are not outside the vehicle, as this may result in death or serious injury.
- AWD models: Do not drive the vehicle off-road.
  This is not an AWD vehicle designed for off-road driving. Proceed with all due caution if it becomes unavoidable to drive off-road.
- AWD models: Do not drive across a river or through other bodies of water.
  This may cause electric/electronic components to short circuit, damage the engine or cause other serious damage to the vehicle.
- Do not drive in excess of the speed limit. Even if the legal speed limit permits it, do not drive over 85 mph (140 km/h) unless your vehicle has high-speed capability tires. Driving over 85 mph (140 km/h) may result in tire failure, loss of control and possible injury. Be sure to consult a tire dealer to determine whether the tires on your vehicle are high-speed capability tires or not before driving at such speeds.

CAUTION

■ **When driving on slippery road surfaces**

- Sudden braking, acceleration and steering may cause tire slippage and reduce your ability to control the vehicle, resulting in an accident.
- Sudden changes in engine speed, such as engine braking caused by up-shifting and down-shifting, may cause the vehicle to skid, resulting in an accident.
- After driving through a puddle, lightly depress the brake pedal to make sure that the brakes are functioning properly. Wet brake pads may prevent the brakes from functioning properly. If the brakes on only one side are wet and not functioning properly, steering control may be affected, resulting in an accident.

■ **When shifting the shift lever**

Be careful not to shift the shift lever with the accelerator pedal depressed. Shifting the shift lever to a gear other than P or N may lead to unexpected rapid acceleration of the vehicle that may cause an accident and result in death or serious injury.

■ **If you hear a squealing or scraping noise (brake pad wear limit indicators)**

Have the brake pads checked and replaced by your Toyota dealer as soon as possible.
Rotor damage can result if the pads are not replaced when needed.

It is dangerous to drive the vehicle when the wear limits of the brake pads and/or those of the brake discs are exceeded.

CAUTION

■ **When the vehicle is stopped**

- Do not race the engine.
  If the vehicle is in any gear other than P or N, the vehicle may accelerate suddenly and unexpectedly, causing an accident.
- Do not leave the vehicle with the engine running for a long time.
  If such a situation cannot be avoided, park the vehicle in an open space and check that exhaust fumes do not enter the vehicle interior.
- In order to prevent accidents due to the vehicle rolling away, always keep depressing the brake pedal while the engine is running, and apply the parking brake as necessary.
- If the vehicle is stopped on an incline, in order to prevent accidents caused by the vehicle rolling forward or backward, always depress the brake pedal and securely apply the parking brake as needed.
- Avoid revving or racing the engine.
  Running the engine at high speed while the vehicle is stopped may cause the exhaust system to overheat, which could result in a fire if combustible material is nearby.

■ **When the vehicle is parked**

- Do not leave glasses, cigarette lighters, spray cans, or soft drink cans in the vehicle when it is in the sun.
  Doing so may result in the following:
  - Gas may leak from a cigarette lighter or spray can, and may lead to a fire.
  - The temperature inside the vehicle may cause the plastic lenses and plastic material of eye glasses to deform or crack.
  - Soft drink cans may fracture, causing the contents to spray over the interior of the vehicle, and may also cause a short circuit in the vehicle's electrical components.
- Do not leave cigarette lighters in the vehicle. If a cigarette lighter is in a place such as the glove box or on the floor, it may be lit accidentally when luggage is loaded or the seat is adjusted, causing a fire.

**CAUTION**

- Do not attach adhesive discs to the windshield or windows. Do not place containers such as air fresheners on the instrument panel or dashboard. Adhesive discs or containers may act as lenses, causing a fire in the vehicle.
- If a curved glass is coated with a metallized film such as a silver-colored one, reflected sunlight may cause the glass to act as a lens, causing a fire.
- Always apply the parking brake, shift the shift lever to P, stop the engine and lock the vehicle.
  Do not leave the vehicle unattended while the engine is running.
- Do not touch the exhaust pipe while the engine is running or immediately after turning the engine off.
  Doing so may cause burns.
- Do not leave the engine running in an area with snow build-up, or where it is snowing. If snowbanks build up around the vehicle while the engine is running, exhaust gases may collect and enter the vehicle. This may lead to death or a serious health hazard.

**■ Exhaust gases**

Exhaust gases include harmful carbon monoxide (CO), which is colorless and odorless. Inhaling exhaust gases may lead to death or a serious health hazard.

- If the vehicle is in a poorly ventilated area, stop the engine. In a closed area, such as a garage, exhaust gases may collect and enter the vehicle. This may lead to death or a serious health hazard.
- The exhaust system should be checked occasionally. If there is a hole or crack caused by corrosion, damage to a joint or abnormal exhaust noise, be sure to have the vehicle inspected and repaired by your Toyota dealer. Failure to do so may allow exhaust gases to enter the vehicle, resulting in death or a serious health hazard.

CAUTION

■ **When taking a nap in the vehicle**

Always turn the engine off. Otherwise, if you accidentally move the shift lever or depress the accelerator pedal, this could cause an accident or fire due to engine overheating. Additionally, if the vehicle is parked in a poorly ventilated area, exhaust gases may collect and enter the vehicle, leading to death or a serious health hazard.

■ **When braking**

- When the brakes are wet, drive more cautiously.
  Braking distance increases when the brakes are wet, and this may cause one side of the vehicle to brake differently than the other side. Also the parking brake may not securely hold the vehicle.
- If the power brake assist function does not operate, do not follow other vehicles closely and avoid hills or sharp turns that require braking.
  In this case, braking is still possible, but the brake pedal should be depressed more firmly than usual. Also, the braking distance will increase.
- Do not pump the brake pedal if the engine stalls.
  Each push on the brake pedal uses up the reserve for the power-assisted brakes.
- The brake system consists of 2 individual hydraulic systems: If one of the systems fails, the other will still operate. In this case, the brake pedal should be depressed more firmly than usual and braking distance will increase.
  If this happens, do not continue to drive the vehicle. Have your brakes fixed immediately.

■ **If the vehicle becomes stuck (AWD models)**

Do not spin the wheels excessively when any of the tires is up in the air, or the vehicle is stuck in sand or mud, etc. This may damage the driveline components or unexpectedly propel the vehicle forward or backward, causing an accident.

NOTICE

**When driving the vehicle**

- Do not depress the accelerator and brake pedals at the same time during driving, as this may restrain the engine output.
- Do not use the accelerator pedal or depress the accelerator and brake pedals at the same time to hold the vehicle on a hill.

**When parking the vehicle**

Always shift the shift lever to P. Failure to do so may cause the vehicle to move or the vehicle may accelerate suddenly if the accelerator pedal is accidentally depressed.

**Avoiding damage to vehicle parts**

- Do not turn the steering wheel fully in either direction and hold it there for an extended period of time.
  Doing so may damage the power steering motor.
- When driving over bumps in the road, drive as slowly as possible to avoid damaging the wheels, underside of the vehicle, etc.

**If you get a flat tire while driving**

A flat or damaged tire may cause the following situations. Hold the steering wheel firmly and gradually depress the brake pedal to slow down the vehicle.

- It may be difficult to control your vehicle.
- The vehicle may make abnormal sounds or vibrations.
- The vehicle may lean abnormally.

Information on what to do in case of a flat tire. (→P. 695, 697)

NOTICE

**When encountering flooded roads**

Do not drive on a road that has flooded after heavy rain etc. Doing so may cause the following serious damage to the vehicle:

- Engine stalling
- Short in electrical components
- Engine damage caused by water immersion

In the event that you drive on a flooded road and the vehicle is flooded, be sure to have your Toyota dealer check the following:

- Brake function
- Changes in quantity and quality of oil and fluid used for the engine, transaxle, transfer (AWD models), rear differential (AWD models), etc.
- Lubricant condition for the propeller shaft (AWD models), bearings and suspension joints (where possible) and the function of all joints, bearings, etc.

## ■ Starting the engine

STEP 1 Check that the parking brake is set.

STEP 2 Check that the shift lever is set in P.

STEP 3 Firmly depress the brake pedal.

STEP 4 Turn the engine switch to the “START” position to start the engine.

## ■ Changing the engine switch positions

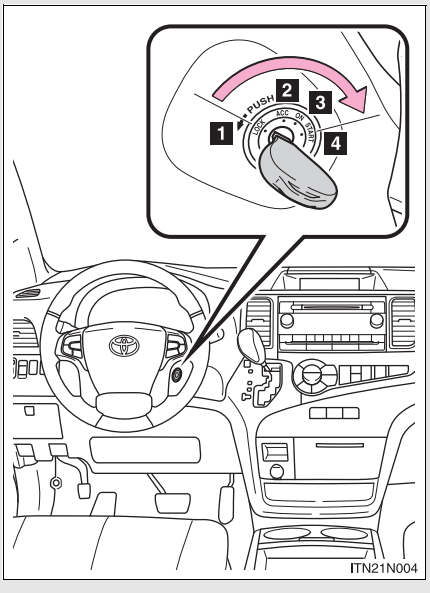


**1** “LOCK”

The steering wheel is locked and the key can be removed. (The key can be removed only when the shift lever is in “P”.)

**2** “ACC”

Some electrical components such as the audio system can be used.

**3** “ON”

All electrical components can be used.

**4** “START”

For starting the engine.

■ **Turning the key from “ACC” to “LOCK”**

STEP 1 Shift the shift lever to P.

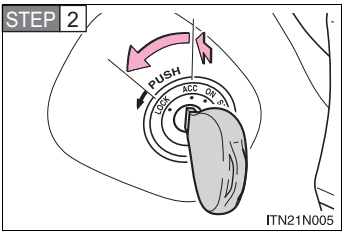


Push in the key and turn it to the “LOCK” position.

■ **If the engine does not start (vehicles with engine immobilizer system)**

The engine immobilizer system may not have been deactivated. (→P. 151)

■ **When the steering lock cannot be released**

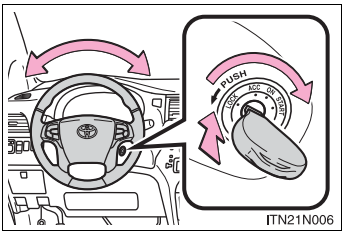


When starting the engine, the engine switch may seem stuck in the “LOCK” position. To free it, turn the key while turning the steering wheel slightly left and right.

■ **Key reminder function**

A buzzer sounds if the driver’s door is opened while the engine switch is in the “LOCK” or “ACC” position to remind you to remove the key.

CAUTION

**When starting the engine**

Always start the engine while sitting in the driver's seat. Do not depress the accelerator pedal while starting the engine under any circumstances.
Doing so may cause an accident resulting in death or serious injury.

**Caution when driving**

Do not turn the engine switch to the "LOCK" position while driving. If, in an emergency, you must turn the engine off while the vehicle is moving, turn the engine switch only to the "ACC" position to stop the engine. An accident may result if the engine is stopped while driving.

NOTICE

**To prevent battery discharge**

Do not leave the engine switch in the "ACC" or "ON" position for long periods of time without the engine running.

**When starting the engine**

- Do not crank the engine for more than 30 seconds at a time. This may overheat the starter and wiring system.
- Do not race a cold engine.
- If the engine becomes difficult to start or stalls frequently, have the engine checked immediately.

**Performing the following operations when carrying the electronic key on your person starts the engine or changes "ENGINE START STOP" switch modes.**

## ■ Starting the engine

STEP 1 Check that the parking brake is set.

STEP 2 Check that the shift lever is set in "P".

STEP 3 Firmly depress the brake pedal.

The "ENGINE START STOP" switch indicator will turn green. If the indicator does not turn green, the engine cannot be started.

STEP 4

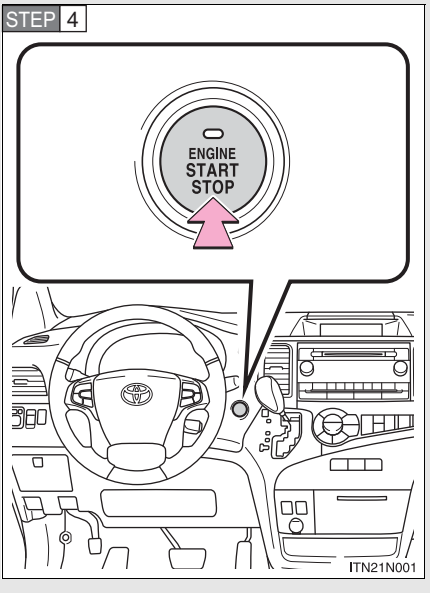


Press the "ENGINE START STOP" switch.

The engine will crank until it starts or for up to 30 seconds, whichever is less.

Continue depressing the brake pedal until the engine is completely started.

The engine can be started from any mode.

## ■ Stopping the engine

STEP 1 Stop the vehicle.

STEP 2 Shift the shift lever to P.

STEP 3 Set the parking brake. (→P. 227)

STEP 4 Press the "ENGINE START STOP" switch.

STEP 5 Release the brake pedal and check that the indicator on the "ENGINE START STOP" switch is off.

## Changing “ENGINE START STOP” switch modes

Modes can be changed by pressing the “ENGINE START STOP” switch with the brake pedal released. (The mode changes each time the switch is pressed.)

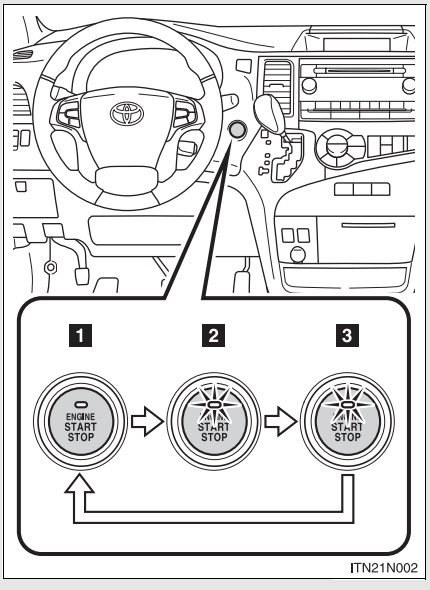


**1** Off*

Emergency flashers can be used.

**2** ACCESSORY mode

Some electrical components such as the audio system can be used.

The “ENGINE START STOP” switch indicator turns amber.

**3** IGNITION ON mode

All electrical components can be used.

The “ENGINE START STOP” switch indicator turns amber.

*: If the shift lever is in a position other than “P” when turning off the engine, the “ENGINE START STOP” switch will be turned to ACCESSORY mode, not to OFF.

### When stopping the engine with the shift lever in a position other than P

If the engine is stopped with the shift lever in a position other than P, the “ENGINE START STOP” switch will not be turned off but instead be turned to ACCESSORY mode. Perform the following procedure to turn the switch off:

STEP 1 Check that the parking brake is set.

STEP 2 Shift the shift lever to P.

STEP 3 Check that the indicator on the “ENGINE START STOP” switch is illuminated in amber and then press the “ENGINE START STOP” switch once.

STEP 4 Check that the indicator on the “ENGINE START STOP” switch is off.



---

**■ Auto power off function**

If the vehicle is left in ACCESSORY or IGNITION ON mode (the engine is not running) for more than an hour with the shift lever in P, the “ENGINE START STOP” switch will automatically turn off. However, this function cannot entirely prevent battery discharge. Do not leave the vehicle with the “ENGINE START STOP” switch in ACCESSORY or IGNITION ON mode for long periods of time when the engine is not running.

**■ Operation of the “ENGINE START STOP” switch**

When operating the “ENGINE START STOP” switch, one short, firm press is enough. If the switch is pressed improperly, the engine may not start or the “ENGINE START STOP” switch mode may not change. It is not necessary to press and hold the switch.

■ **Electronic key battery depletion**

→P. 49

■ **Conditions affecting operation**

→P. 45

■ **Note for the entry function**

→P. 46

■ **If the engine does not start**

The engine immobilizer system may not have been deactivated. (→P. 151)

■ **Steering lock**

After turning the “ENGINE START STOP” switch off and opening and closing the doors, the steering wheel will be locked due to the steering lock function. Operating the “ENGINE START STOP” switch again automatically cancels the steering lock.

■ **When the steering lock cannot be released**

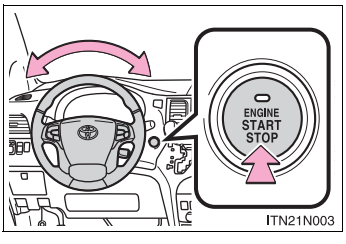


The green indicator light on the “ENGINE START STOP” switch will flash and a message will be shown on the multi-information display. Press the “ENGINE START STOP” switch while turning the steering wheel left and right.

■ **Steering lock motor overheating prevention**

To prevent the steering lock motor from overheating, the motor may be suspended if the engine is turned on and off repeatedly in a short period of time. In this case, refrain from operating the engine. After about 10 seconds, the steering lock motor will resume functioning.

### When the “ENGINE START STOP” switch indicator flashes in amber

The system may be malfunctioning. Have the vehicle inspected by your Toyota dealer immediately.

### If the electronic key battery is depleted

→P. 645

**CAUTION**

#### When starting the engine

Always start the engine while sitting in the driver’s seat. Do not depress the accelerator pedal while starting the engine under any circumstances.
Doing so may cause an accident resulting in death or serious injury.

#### Caution while driving

If the vehicle begins to slide due to engine failure or other circumstances, do not lock or open the doors until the vehicle reaches a safe and complete stop. Activation of the steering lock in this circumstance may lead to an accident, resulting in death or serious injury.

#### Stopping the engine in an emergency

If you want to stop the engine in an emergency while driving the vehicle, push and hold the “ENGINE START STOP” switch for more than 3 seconds. However, do not touch the "ENGINE START STOP" switch while driving except in an emergency. Turning the engine off while driving will not cause loss of steering or braking control, but the power assist to these systems will be lost. This will make it more difficult to steer and brake, so you should pull over and stop the vehicle as soon as it is safe to do so.

NOTICE

■ **To prevent battery discharge**

- Do not leave the “ENGINE START STOP” switch in ACCESSORY or IGNITION ON mode for long periods of time without the engine running.
- If the indicator on the “ENGINE START STOP” switch is illuminated, the “ENGINE START STOP” switch is not off. When exiting the vehicle, always check that the “ENGINE START STOP” switch is off.
- Do not stop the engine when the shift lever is in a position other than P. If the engine is stopped in another shift lever position, the “ENGINE START STOP” switch will not be turned off but instead be turned to ACCESSORY mode. If the vehicle is left in ACCESSORY mode, battery discharge may occur.

■ **When starting the engine**

- Do not race a cold engine.
- If the engine becomes difficult to start or stalls frequently, have the engine checked immediately.

■ **Symptoms indicating a malfunction with the “ENGINE START STOP” switch**

If the “ENGINE START STOP” seems to be operating somewhat differently than usual, such as the switch sticking slightly, there may be a malfunction. Contact your Toyota dealer immediately.

**Select a shift position appropriate for the driving conditions.**

## ■ Shifting the shift lever

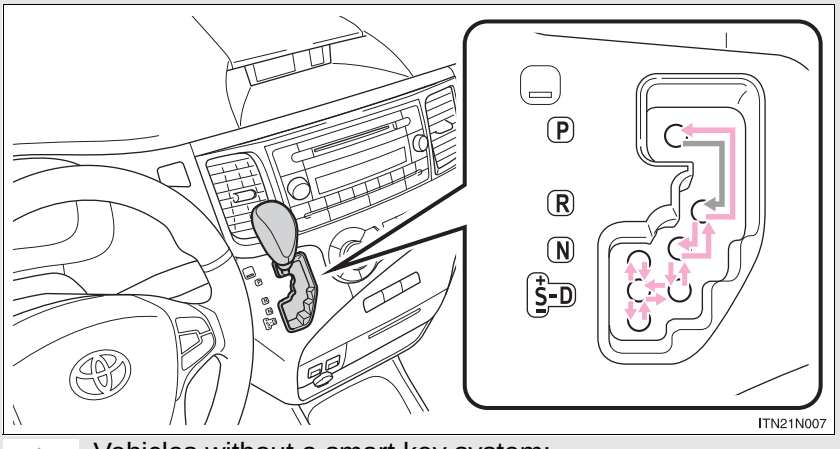


Vehicles without a smart key system:
While the engine switch is in the “ON” position, move the shift lever with the brake pedal depressed.

Vehicles with a smart key system:
While the “ENGINE START STOP” switch is in IGNITION ON mode, move the shift lever with the brake pedal depressed.

When shifting the shift lever between P and D, make sure that the vehicle is completely stopped.

## ■ Shift position purpose

| Shift position | Function |
|---|---|
| P | Parking the vehicle/starting the engine |
| R | Reversing |
| N | Neutral |
| D | Normal driving*1 |
| S | S mode driving*2 (→P. 223) |

*1: Shifting to the D position allows the system to select a gear suitable for the driving conditions. Setting the shift lever to the D position is recommended for normal driving.

*2: Selecting shift ranges using S mode restricts the upper limit of the possible gear ranges, controls engine braking forces, and prevents unnecessary upshifting.

## Changing shift ranges in S mode

When the shift lever is in the S position, the shift lever can be operated as follows:

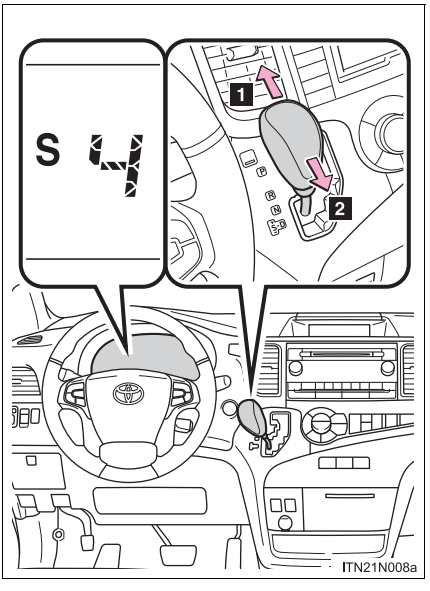


1 Upshifting

2 Downshifting

The initial shift range in S mode is set automatically to “5” or “4” according to vehicle speed. However, the initial shift range may be set to “3” if the AI-SHIFT has operated while the shift lever was in the “D” position. (→P. 225)

### Shift ranges and their functions

- You can choose from 6 levels of engine braking force.
- A lower shift range will provide greater engine braking force than a higher shift range, and the engine speed will also increase.

### ■S mode

- ●When the shift range is “5” or lower, holding the shift lever toward “+” sets the shift range to “6”.
- ●To prevent excessive engine speed, a function was adopted that automatically selects a higher shift range before the engine speed becomes too high.
- ●To protect the automatic transaxle, a function is adopted that automatically selects a higher shift range when the fluid temperature is high.

### ■When driving with the cruise control or dynamic radar cruise control

Engine braking will not occur in S mode, even when downshifting to “5” or “4”. (→P. 271, 275)

### ■If the shift lever cannot be shifted from P

- ●→P. 714
- ●Vehicles with AUTO ACCESS SEAT: If the AUTO ACCESS SEAT has not been locked in place after being stowed, the shift lever cannot be shifted from P.
  For details, refer to “AUTO ACCESS SEAT OWNER’S MANUAL”.

### ■If the “S” indicator does not come on even after shifting the shift lever to S

This may indicate a malfunction in the automatic transaxle system. Have the vehicle inspected by your Toyota dealer immediately. (In this situation, the transaxle will operate in the same manner as when the shift lever is in D.)

### Downshift restriction warning buzzer (S mode)

To help ensure safety and driving performance, downshifting operation may sometimes be restricted. In some circumstances, downshifting may not be possible even when the shift lever is operated. (A buzzer will sound twice.)

### AI-SHIFT

AI-SHIFT automatically selects the suitable gear according to driver performance and driving conditions.
AI-SHIFT automatically operates when the shift lever is in the D position. (Shifting the shift lever to the S position cancels the function.)



CAUTION

### When driving on slippery road surfaces

Do not accelerate or shift gears suddenly.
Sudden changes in engine braking may cause the vehicle to spin or skid, resulting in an accident.

# Turn signal lever

**The turn signal lever can be used to show the following intentions of the driver:**

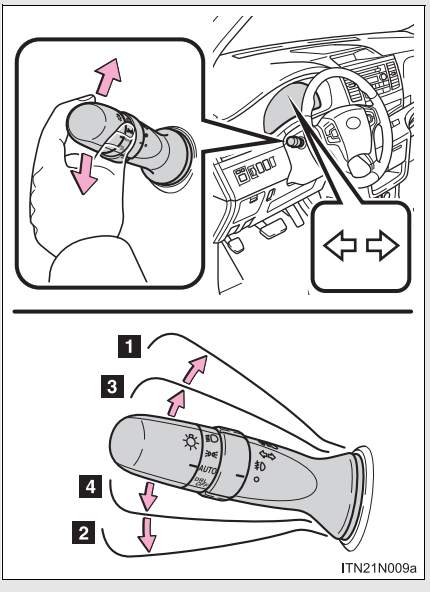


1 Right turn

2 Left turn

3 Lane change to the right (push and hold the lever partway)

The right hand signal will flash until you release the lever.

4 Lane change to the left (push and hold the lever partway)

The left hand signal will flash until you release the lever.

■ **Turn signals can be operated when**

Vehicles without a smart key system:
The engine switch is in the “ON” position.

Vehicles with a smart key system:
The “ENGINE START STOP” switch is in IGNITION ON mode.

■ **If the indicator flashes faster than usual**

Check that a light bulb in the front or rear turn signal lights has not burned out.

# Parking brake

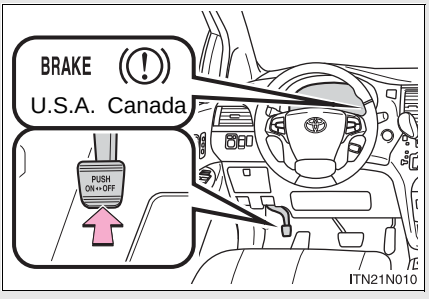


To set the parking brake, fully depress the parking brake pedal with your left foot while depressing the brake pedal with your right foot.

(Depressing the pedal again releases the parking brake.)



### Usage in winter time

See “Winter driving tips” for parking brake usage in winter time. (→P. 324)

NOTICE

### Before driving

Fully release the parking brake.
Driving the vehicle with the parking brake set will lead to brake components overheating, which may affect braking performance and increase brake wear.

# Horn

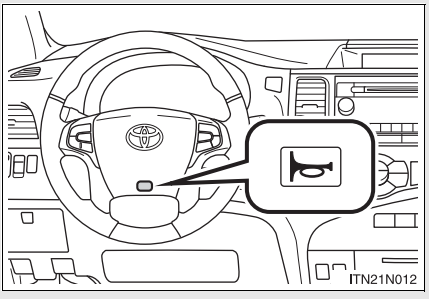


To sound the horn, press on or close to the mark.

■ **After adjusting the steering wheel**

Make sure that the steering wheel is securely locked.
The horn may not sound if the steering wheel is not securely locked.
(→P. 131)

# Gauges and meters

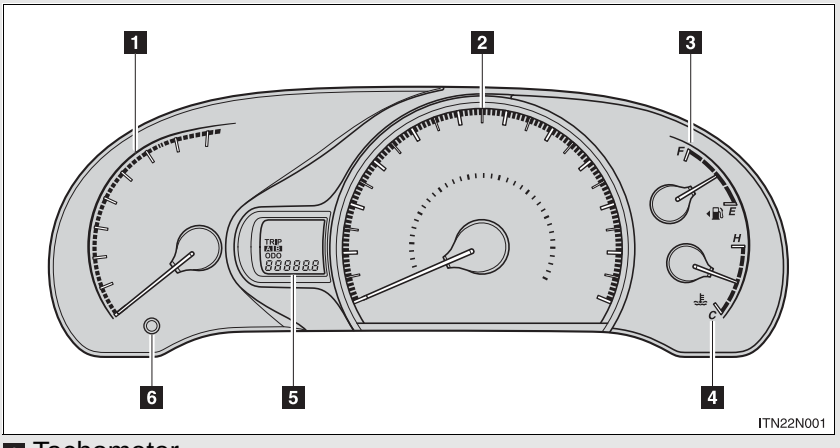


**1** Tachometer

Displays the engine speed in revolutions per minute.

**2** Speedometer

Displays the vehicle speed.

**3** Fuel gauge

Displays the quantity of fuel remaining in the tank.

**4** Engine coolant temperature gauge

Displays the engine coolant temperature.

**5** Odometer and trip meter display

Odometer: Displays the total distance the vehicle has been driven.

Trip meter: Displays the distance the vehicle has been driven since the meter was last reset. Trip meters “A” and “B” can be used to record and display different distances independently.

**6** Odometer/trip meter display change button

→P. 230

## Changing the display

Pressing this button switches among odometer display, trip meter displays and Eco Driving Indicator Light setting screen.

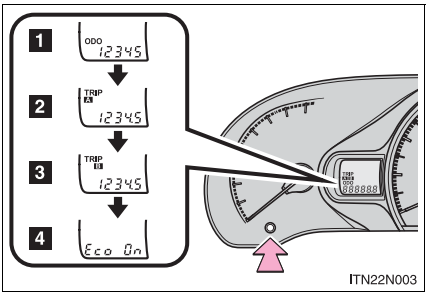


1 Odometer

2 Trip meter A*1

3 Trip meter B*1

4 Eco Driving Indicator Light setting screen*2

*1: Pressing and holding the button will reset the trip meter.

*2: Pressing and holding the button will enable or disable Eco Driving Indicator Light.

## Instrument panel light control

The brightness of the instrument panel lights can be adjusted by turning the knob.

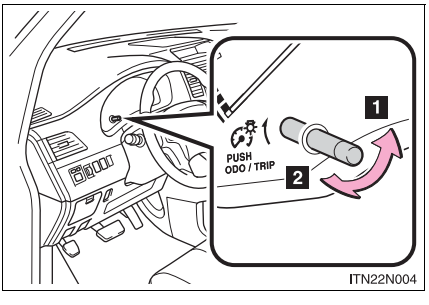


1 Darker

2 Brighter

### The meters and display illuminate when (Optitron type meters)

Vehicles without a smart key system:
The engine switch is in the “ON” position.

Vehicles with a smart key system:
The “ENGINE START STOP” switch is in IGNITION ON mode.

NOTICE

**To prevent damage to the engine and its components**

- Do not let the indicator needle of the tachometer enter the red zone, which indicates the maximum engine speed.
- The engine may be overheating if the engine coolant temperature gauge is in the red zone (H). In this case, immediately stop the vehicle in a safe place, and check the engine after it has cooled completely. (→P. 725)

# Indicators and warning lights

**The indicator and warning lights on the instrument cluster and center panel inform the driver of the status of the vehicle's various systems.**

## ■ Instrument cluster

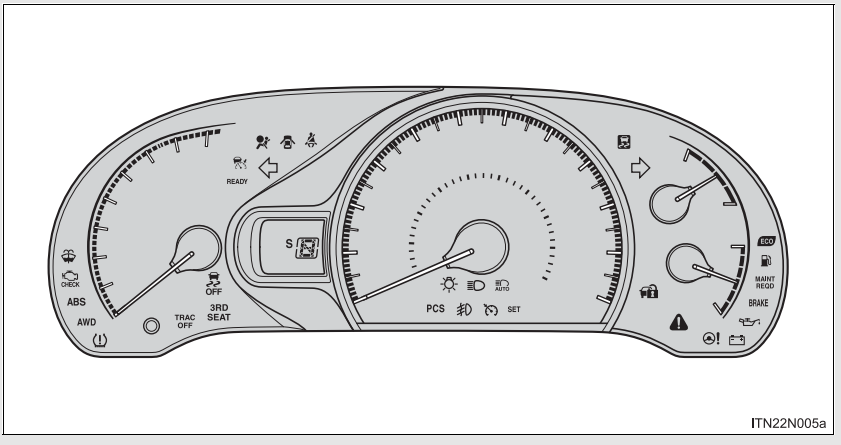


ITN22N005a

## ■ Center display

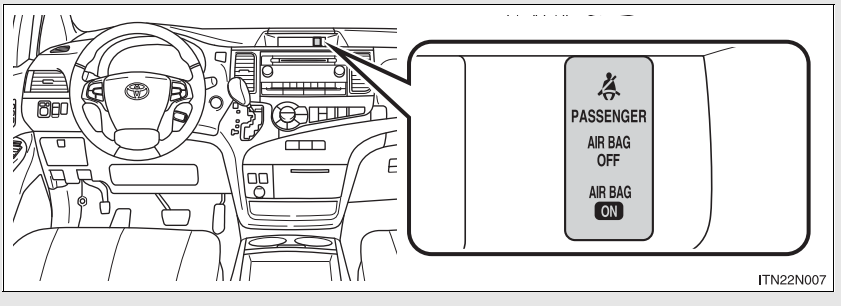


ITN22N007

## Indicators

The indicators inform the driver of the operating state of the vehicle's various systems.

| | |
|---|---|
| Turn signal indicator (→P. 226) | Cruise control indicator (→P. 271, 275) (if equipped) |
| Headlight high beam indicator (→P. 252) | Cruise control "SET" indicator (→P. 271, 275) (if equipped) |
| Headlight indicator (→P. 251) (U.S.A) | Radar cruise control indicator (→P. 275) (if equipped) |
| Tail light indicator (→P. 251) (Canada) | Radar cruise "READY" indicator (→P. 275) (if equipped) |
| Fog light indicator (→P. 264) (if equipped) | SRS airbag on-off indicator (→P. 172) *1 |
| Automatic High Beam indicator (→P. 257) (if equipped) | Security indicator (→P. 151, 154) (if equipped) |

*1, 2 Slip indicator (→P. 300, 305)

*1 VSC OFF indicator (→P. 301)

*1 "TRAC OFF" indicator (→P. 301)

Shift position indicators (→P. 223)

*1 Eco Driving Indicator Light (→P. 249) (if equipped)

*1, 3 "PCS" warning (→P. 307) (if equipped)

*1: These lights turn on when the "ENGINE START STOP" switch is turned to IGNITION ON mode (vehicles with a smart key system) or the engine switch is turned to the "ON" position (vehicles without a smart key system) to indicate that a system check is being performed. They will turn off after the engine is started, or after a few seconds. There may be a malfunction in a system if a light does not come on, or if the lights do not turn off. Have the vehicle inspected by your Toyota dealer.

*2: The light flashes to indicate that the system is operating.

*3: The light flashes faster than usual to indicate that the system is operating.

## Warning lights

Warning lights inform the driver of malfunctions in any of the vehicle's systems. (→P. 681)

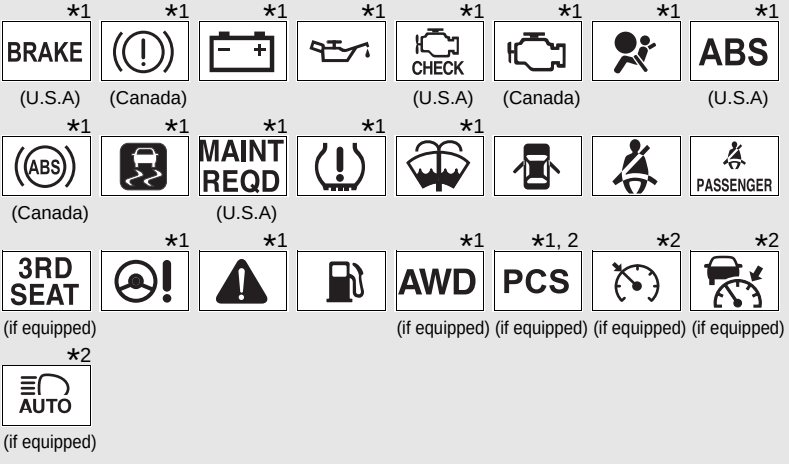


*1: These lights turn on when the "ENGINE START STOP" switch is turned to IGNITION ON mode (vehicles with a smart key system) or the engine switch is turned to the "ON" position (vehicles without a smart key system) to indicate that a system check is being performed. They will turn off after the engine is started, or after a few seconds. There may be a malfunction in a system if a light does not come on, or if the lights do not turn off. Have the vehicle inspected by your Toyota dealer for details.

*2: The light flashes to indicate a malfunction.

CAUTION

**If a safety system warning light does not come on**

Should a safety system light such as the ABS or SRS airbag warning light not come on when you start the engine, this could mean that these systems are not available to help protect you in an accident, which could result in death or serious injury. Have the vehicle inspected by your Toyota dealer immediately if this occurs.

# Multi-information display*

**The multi-information display presents the driver with a variety of driving-related data, including the clock and current outside temperature. The display varies depending on its specification.**

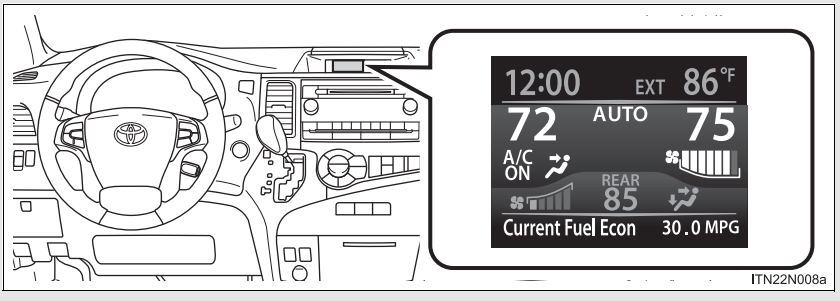


● Clock (→P. 241)

Indicates and sets the time.

● Outside temperature display

Indicates the outside temperature.
The temperature range that can be displayed is from -40°F (-40°C) to 122°F (50°C).

● Air conditioning system display (→P. 352)

Automatically displayed when the air conditioning is turned on.

● Rear view monitor (→P. 295)

Automatically displayed when the shift lever is moved into R.

● Trip information (→P. 238)

Displays driving range, fuel consumption and other cruising-related information.

● Intuitive parking assist display (if equipped) (→P. 288)



*: If equipped

- Warning messages (→P. 694)

  Automatically displayed when a malfunction occurs in one of the vehicle's systems.

- Customizable features setting display (→P. 765)

## Switching the display

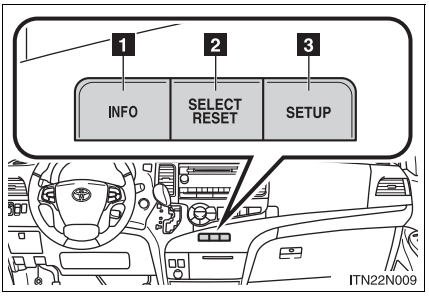


1 "INFO" button
2 "SELECT RESET" button
3 "SETUP" button

## Display items

Display items can be switched by pressing the "INFO" button.
The display varies depending on its specification.

### Average Fuel Economy

Displays the average fuel consumption since the function was reset.

The function can be reset by pressing and holding the "SELECT RESET" button when the average fuel economy is displayed.

### Current Fuel Economy

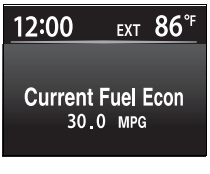


Displays the current rate of fuel consumption.

## ■ Distance to Empty

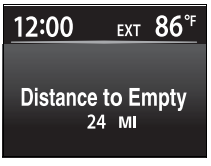


Displays the estimated maximum distance that can be driven with the quantity of fuel remaining.

- This distance is computed based on your average fuel consumption. As a result, the actual distance that can be driven may differ from that displayed.
- When only a small amount of fuel is added to the tank, the display may not be updated.

## ■ Average Speed

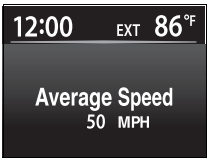


Displays the average vehicle speed since the engine was started or since the function was reset.

The function can be reset by pressing and holding the “SELECT RESET” button when the average speed is displayed.

## ■ Trip Timer

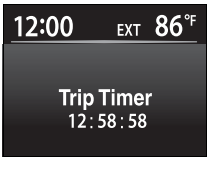


Displays the elapsed time since the timer was reset.

The timer only functions when the engine is running. The timer can be started and paused by pressing the “SELECT RESET” button, and reset by pressing and holding the “SELECT RESET” button when the trip timer is displayed.

## Set up display

### Before setting

STEP 1 Press the “SETUP” button while the vehicle is stopped.

The “Custom Settings” screen is displayed on the multi-information display.

If left idle for approximately 20 seconds, the display will revert to the previous screen.

STEP 2

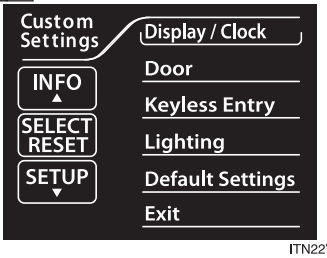


ITN22V009a

Select “Display / Clock” by pressing the “INFO” or “SETUP” button, and press the “SELECT RESET” button.

If you select “Exit” and press “SELECT RESET”, the display will revert to the previous screen.

STEP 3

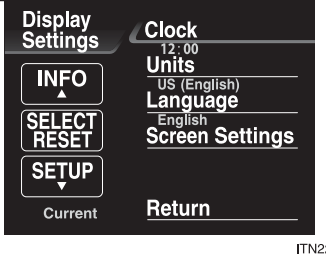


ITN22N016

Select the desired item by pressing the “INFO” or “SETUP” button.

Press the “SELECT RESET” button to enter the setting mode.

The current setting is indicated by yellow text.

## ■ Setting the clock

STEP 1 Select “Clock” on the “Display Settings” screen, and press the “SELECT RESET” button.

STEP 2

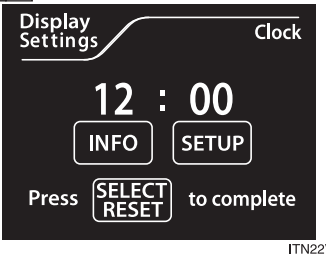


ITN22V011a

Press the “INFO” button to adjust the hours and the “SETUP” button to adjust the minutes.

Press the “SELECT RESET” button to set the clock.

## ■ Selecting the units

STEP 1 Select “Units” on the “Display Settings” screen, and press the “SELECT RESET” button.

STEP 2

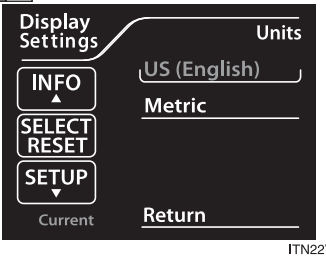


ITN22V012a

Select the units you want to read by pressing the “INFO” or “SETUP” button.

Press the “SELECT RESET” button to set the units.

The current setting is indicated by yellow text.

## ■ Selecting the language

STEP 1 Select “Language” on the “Display Settings” screen, and press the “SELECT RESET” button.

STEP 2

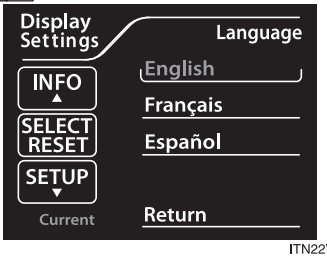


ITN22V013a

Select the language you want to read by pressing the “INFO” or “SETUP” button.

Press the “SELECT RESET” button to set the language.

The current setting is indicated by yellow text.

To shortcut directly to the “Language” screen from the initial “Custom Settings” screen, press and hold the “SETUP” button for 5 seconds.

## ■ Setting up the information display

STEP 1 Select “Screen Settings” on the “Display Settings” screen, and press the “SELECT RESET” button.

STEP 2

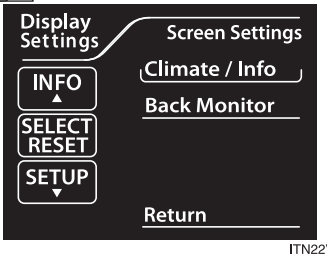


ITN22V017a

For vehicles without a navigation system, select “Climate / Info” by pressing the “INFO” or “SETUP” button.

Press the “SELECT RESET” button to enter the adjustment mode.

● Setting the brightness

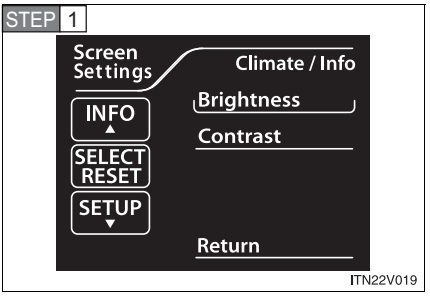


Select “Brightness” on the “Screen Settings” screen, and press the “SELECT RESET” button.

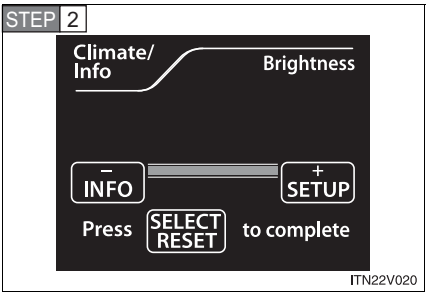


Press the “INFO” or “SETUP” button to adjust the brightness.

+: Brighter
-: Darker

Press the “SELECT RESET” button to exit the screen.

● Setting the contrast

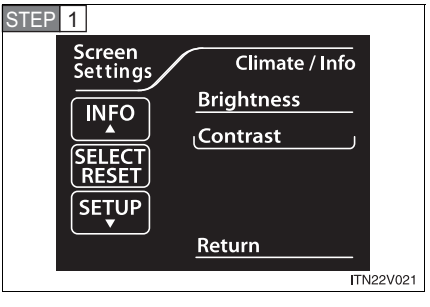


Select “Contrast” on the “Screen Settings” screen, and press the “SELECT RESET” button.

STEP 2

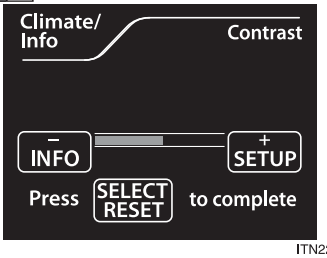


ITN22V022

Press the “INFO” or “SETUP” button to adjust the contrast.

+: Strengthen
-: Weaken

Press the “SELECT RESET” button to exit the screen.

## ■ Setting up the rear view monitor display (if equipped with the rear view monitor system)

STEP 1 Select “Screen Settings” on the “Display Settings” screen, and press the “SELECT RESET” button.

STEP 2

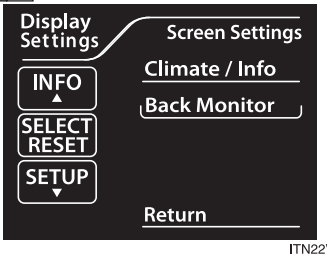


ITN22V018a

Select “Back Monitor” by pressing the “INFO” or “SETUP” button.

Press the “SELECT RESET” button to enter the adjustment mode.

● Setting the brightness

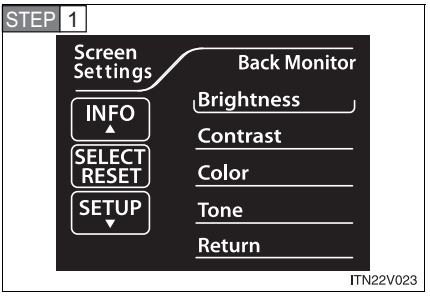


Select “Brightness” on the “Screen Settings” screen, and press the “SELECT RESET” button.

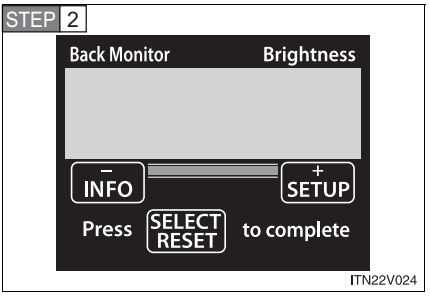


Press the “INFO” or “SETUP” button to adjust the brightness.

+: Brighter
-: Darker

Press the “SELECT RESET” button to the exit screen.

● Setting the contrast

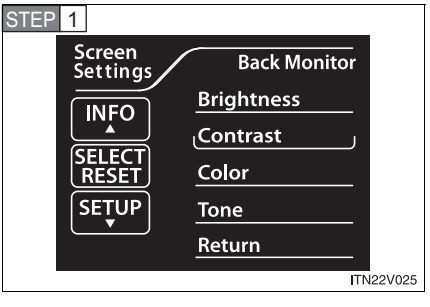


Select “Contrast” on the “Screen Settings” screen, and press the “SELECT RESET” button.

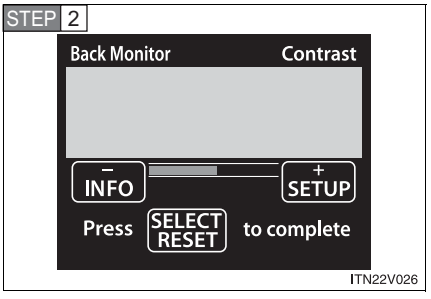


Press the “INFO” or “SETUP” button to adjust the contrast.

+: Strengthen
-: Weaken

Press the “SELECT RESET” button to exit the screen.

● Setting the color

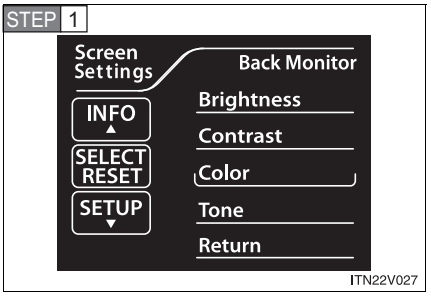


Select “Color” on the “Screen Settings” screen, and press the “SELECT RESET” button.

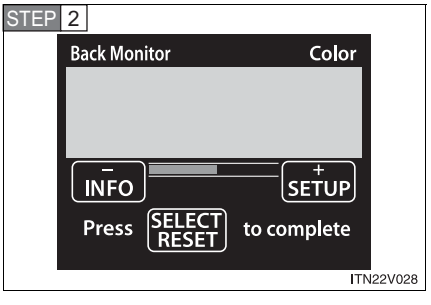


Press the “INFO” or “SETUP” button to adjust the color.

+: Green
-: Red

Press the “SELECT RESET” button to exit the screen.

● Setting the tone

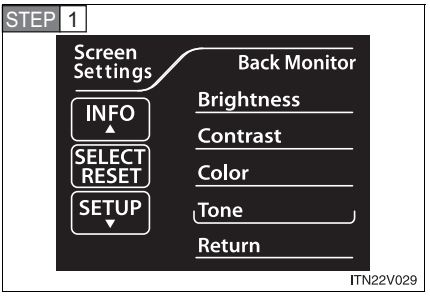


Select “Tone” on the “Screen Settings” screen, and press the “SELECT RESET” button.

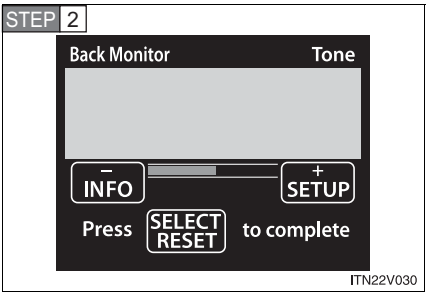


Press the “INFO” or “SETUP” button to adjust the tone.

+: Brighter
-: Darker

Press the “SELECT RESET” button to exit the screen.

■ **Returning to the previous screen**

Select “Return” on the “Screen Settings” screen, and press the “SELECT RESET” button.

### ■ If the vehicle is moved while settings are being changed on the multi-information display

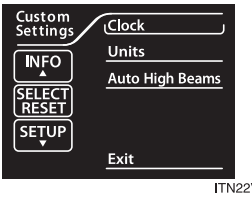

ITN22V031

If the vehicle speed exceeds approximately 3 mph (5 km/h) while the settings are being changed, “Please Stop Vehicle to Change Settings” will be displayed on the multi-information display, and setting mode will exit after several seconds. If the “SETUP” button is pressed at a speed in excess of 3 mph (5 km/h), only some of the settings can be changed. To change the other settings, press the “SETUP” button after bringing the vehicle to a complete stop.

## Eco Driving Indicator

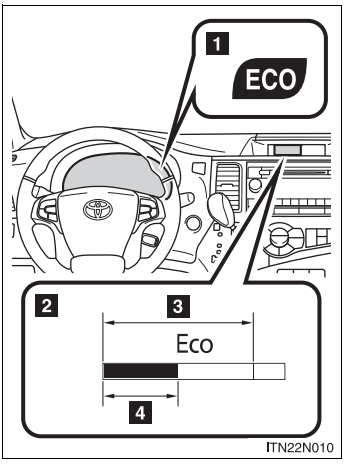


1 Eco Driving Indicator Light

During Eco-friendly acceleration (Eco driving), Eco Driving Indicator Light will turn on.

2 Eco Driving Indicator Zone Display*

Suggests Zone of Eco driving with current Eco driving ratio based on accelerator pedal operation.

*: The display varies depending on its specification.

3 Zone of Eco driving

4 Eco driving ratio based on accelerator pedal operation

If the vehicle exceeds Zone of Eco driving, the right side of Eco Driving Indicator Zone Display will blink and Eco Driving Indicator Light will turn off.

Eco Driving Indicator will operate when the vehicle is being driven with the shift lever in D.

### System check display

**Vehicles without a smart key system**

After switching the engine switch to the “ON” position, “SIENNA” is displayed while system operation is checked. When the system check is complete, the normal screen will return.

**Vehicles with a smart key system**

After switching the “ENGINE START STOP” switch to IGNITION ON mode, “SIENNA” is displayed while system operation is checked. When the system check is complete, the normal screen will return.

### When “--”, “E” or “F” is displayed on the outside temperature display

The system may be malfunctioning. Take your vehicle to your Toyota dealer.

### Outside temperature display

In the following situations, the correct outside temperature may not be displayed, or the display may take longer than normal to change.

- When stopped, or driving at low speeds (less than 12 mph [20 km/h])
- When the outside temperature has changed suddenly (at the entrance/exit of a garage, tunnel, etc.)

NOTICE

**The multi-information display at low temperatures**

Allow the interior of the vehicle to warm up before using the liquid crystal information display. At extremely low temperatures, the information display monitor may respond slowly, and display changes may be delayed.

# Headlight switch

**The headlights can be operated manually or automatically.**

## U.S.A.

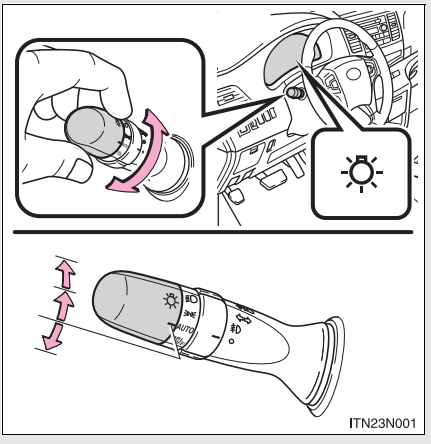


The side marker, parking, tail, license plate, daytime running lights (if equipped) and instrument panel lights turn on.

The headlights and all lights listed above turn on.

AUTO (if equipped) The headlights, side marker, parking lights, daytime running lights and so on turn on and off automatically (when the engine switch is in the “ON” position [vehicles without a smart key system] or the “ENGINE START STOP” switch is in IGNITION ON mode [vehicles with a smart key system]).

## Canada

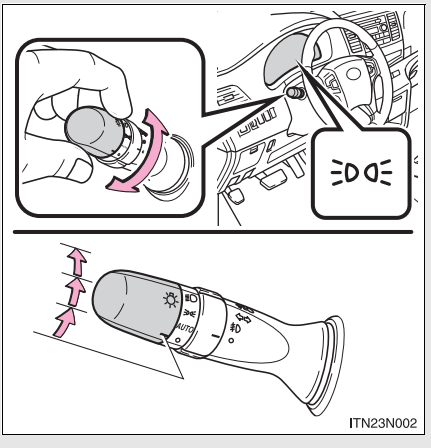


DRL (if equipped) The daytime running light system is on.

DRL OFF (if equipped) The daytime running light system is off.

Off.
Vehicles with the daytime running light system: The daytime running light system is on.

## Turning on the high beam headlights

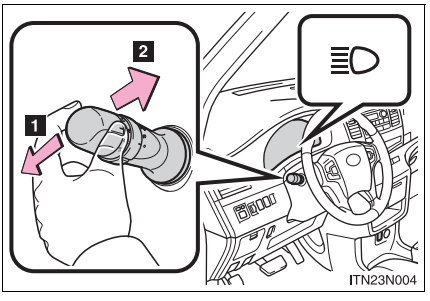


**1** With the headlights on, push the lever away from you to turn on the high beams.

When the light switch is in AUTO position, the Automatic High Beam system will be activated. (→P. 257)

Pull the lever toward you to the center position to turn the high beams off.

**2** Pull the lever toward you and release it to flash the high beams once.

You can flash the high beams with the headlights on or off.

## Manual headlight leveling dial (vehicles with discharge headlights)

The level of the headlight aim can be adjusted according to the number of passengers and the loading condition of the vehicle.

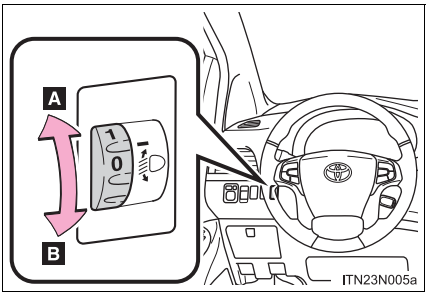


**A** Raises the level of the headlights

**B** Lowers the level of the headlights

### Guide to dial settings

| Occupancy and luggage load conditions | | Dial position | |
|---|---|---|---|
| Occupants | Luggage load | 2WD models | AWD models |
| Driver | None | 0 | 0 |
| Driver and front passenger | None | 0 | 0 |
| Driver, front passenger and all passengers in the second seat | None | 0.5 | 0.5 |
| All seats occupied | None | 2 | 2 |
| All seats occupied | Full luggage loading | 4 | 3.5 |
| Driver | Full luggage loading | 1.5 | 1.5 |

### ■Daytime running light system (if equipped)

- To make your vehicle more visible to other drivers, the headlights turn on automatically (at a reduced intensity) whenever the engine is started and the parking brake is released. Daytime running lights are not designed for use at night.
  For the U.S.A.: Daytime running lights can be turned off by operating the headlight switch.
- Compared to turning on the headlights, the daytime running light system offers greater durability and consumes less electricity, so it can help improve fuel economy.

### ■Headlight control sensor (if equipped)

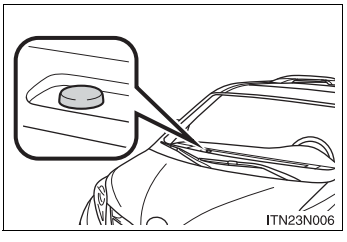


The sensor may not function properly if an object is placed on the sensor, or anything that blocks the sensor is affixed to the windshield.

Doing so interferes with the sensor detecting the level of ambient light and may cause the automatic headlight system to malfunction.

■ **Automatic light off system**

**Vehicles without a smart key system**

- When the headlights are on: The headlights and tail lights turn off 30 seconds after a door is opened and closed if the engine switch is turned to the “ACC” or “LOCK” position. (The lights turn off immediately if on the key is pressed after all the doors are locked.)
- When only the tail lights are on: The tail lights turn off automatically if the engine switch is turned to the “ACC” or “LOCK” position and the driver’s door is opened.

To turn the lights on again, turn the engine switch to the “ON” position, or turn the light switch off once and then back to the or .

**Vehicles with a smart key system**

- When the headlights are on: The headlights and tail lights turn off 30 seconds after a door is opened and closed if the “ENGINE START STOP” switch is turned to ACCESSORY mode or turned off. (The lights turn off immediately if on the key is pressed after all the doors are locked.)
- When only the tail lights are on: The tail lights turn off automatically if the “ENGINE START STOP” switch is turned to ACCESSORY mode or turned off and the driver’s door is opened.

To turn the lights on again, turn the “ENGINE START STOP” switch to IGNITION ON mode, or turn the light switch off and then back to or .

■ **Customization that can be configured at Toyota dealer or by the multi-information display**

Settings (e.g. light sensor sensitivity) can be changed.
(Customizable features →P. 761)

NOTICE

**To prevent battery discharge**

Do not leave the lights on longer than necessary when the engine is not running.

# Automatic High Beam*

**The Automatic High Beam uses an in-vehicle camera sensor to assess the brightness of streetlights, the lights of oncoming and preceding vehicles, etc., and automatically turns high beam on or off as necessary.**

## ■ Activating the Automatic High Beam system

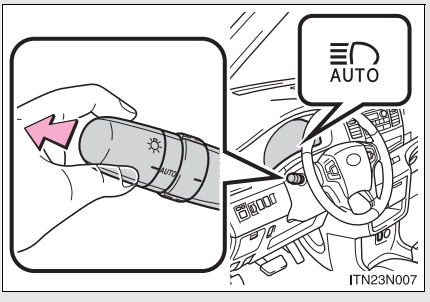


Push the lever away from you with the headlight switch in the **AUTO** position when the "ENGINE START STOP" switch is in IGNITION ON mode (vehicles with a smart key system) or the engine switch is in the "ON" position (vehicles without a smart key system).

The Automatic High Beam indicator will come on when the headlights are turned on automatically to indicate that the system is active.



*: If equipped

## ■ Turning the high beam on/off manually

### Switching to low beam

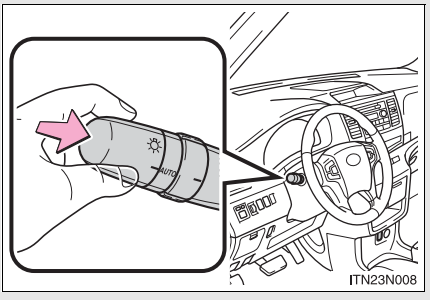


Pull the lever to the original position.

### Switching to high beam

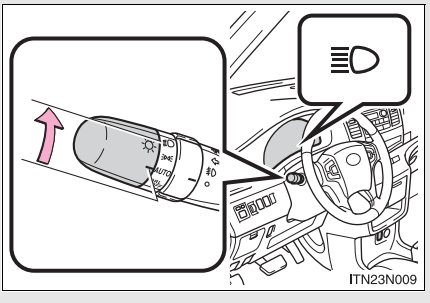


Turn the light switch to the position.

### High beam automatic turning on or off conditions

When all of the following conditions are fulfilled, high beam will be automatically turned on (after approximately 1 second):

- Vehicle speed is above approximately 20 mph (32 km/h).
- The area ahead of the vehicle is dark.
- There are no oncoming or preceding vehicles with headlights or tail lights turned on.

If any of the following conditions are fulfilled, high beam will be automatically turned off:

- Vehicle speed drops below approximately 20 mph (32 km/h).
- The area ahead of the vehicle is not dark.
- Oncoming or preceding vehicles have headlights or tail lights turned on.

### ■Limitations of the Automatic High Beam

Do not rely on the Automatic High Beam. Always drive safely, taking care to observe your surroundings and turning high beam on or off manually if necessary.

### ■Camera sensor detection information

- High beam may not be automatically turned off in the following situations:
  - When oncoming vehicles suddenly appear from a curve.
  - When the vehicle is cut in front of by another.
- High beam may be turned off if an oncoming vehicle that is using fog lights without using the headlights is detected.
- Houselights, streetlights, red traffic signals, and illuminated billboards or signs may cause the high beam to turn off.
- The following factors may affect the amount of time taken to turn high beam on or off:
  - The brightness of headlights, fog lights, and tail lights of oncoming and preceding vehicles
  - Road conditions (wetness, ice, snow etc.)
  - The number of passengers and amount of baggage
- High beam may be turned on or off when unexpected by the driver.

- In the situations below, the system may not be able to correctly detect the surrounding brightness levels, and may flash or expose nearby pedestrians to the high beam. Therefore, you should consider turning the high beam on or off manually rather than relying on the Automatic High Beam system.
  - In bad weather (rain, snow, fog, sandstorms etc.)
  - The windshield is obscured by fog, mist, ice, dirt etc.
  - The windshield is cracked or damaged.
  - The inside rear view mirror or camera sensor is deformed or dirty.
  - Surrounding brightness levels are equal to those of headlights, tail lights or fog lights.
  - Vehicles ahead have headlights that are either switched off, dirty, are changing color, or are not aimed properly.
  - When driving through an area of intermittently changing brightness and darkness
  - When frequently and repeatedly driving ascending/descending roads, or roads with rough, bumpy or uneven surfaces (such as stone-paved roads, gravel tracks etc.)
  - When frequently and repeatedly taking curves or driving on a winding road
  - There is a highly reflective object ahead of the vehicle, such as a sign or a mirror.
  - The vehicle's headlights are damaged or dirty.
  - The vehicle is lifting or tilting, due to a flat tire, a trailer being towed etc.
  - The Automatic High Beam indicator is flashing.
  - The high beam and low beam are repeatedly being switched between in an abnormal manner.
  - The driver believes that the high beam may be causing problems or distress to other drivers or pedestrians nearby.

### ■ If the Automatic High Beam indicator flashes...

It may indicate a malfunction in the system. Contact your Toyota dealer.

### ■ Customization that can be configured at Toyota dealer or by the multi-information display

The Automatic High Beam can be turned off.
(Customizable features →P. 761)

### ■ Temporary lowering sensor sensitivity

The sensitivity of the sensor can be temporarily lowered.

To lower the sensitivity, push and hold button on the inside rear view mirror for 15 to 20 seconds, and release. The indicator light on the inside rear view mirror will flash to indicate that the sensitivity has been lowered.

Vehicles without a smart key system:
When the engine switch is turned to the “LOCK” position, the sensitivity will be returned to its normal level.
Vehicles with a smart key system:
When the “ENGINE START STOP” switch is turned off, the sensitivity will be returned to its normal level.

NOTICE

■ **Camera sensor**

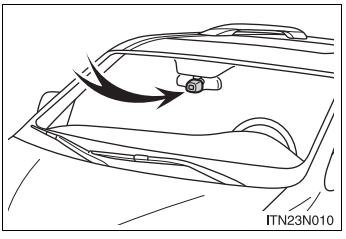


Observe the following to ensure that the Automatic High Beam functions correctly.

- Do not touch the camera sensor.
- Do not subject the inside rear view mirror or the camera sensor to a strong impact.
- Do not disassemble the camera sensor.
- Do not spill liquid onto the inside rear view mirror or the camera sensor.
- Do not apply window tinting or stickers to the camera sensor or the area of windshield near the camera sensor.
- Do not place items on the dashboard. There is a possibility that the camera sensor will mistake items reflected in the windshield for streetlights, the headlights of other vehicles, etc.
- Do not install a parking tag or any other accessories near or around the inside rear view mirror and the camera sensor.
- Do not overload the vehicle.
- Do not modify the vehicle.
- Do not replace windshield with a non-genuine windshield.
  Contact your Toyota dealer.

■ **Headlight leveling**

When the vehicle is loaded, headlight level should be adjusted to appropriate dial setting. (→P. 253)

# Fog light switch*

**The fog lights secure excellent visibility in difficult driving conditions, such as in rain and fog.**

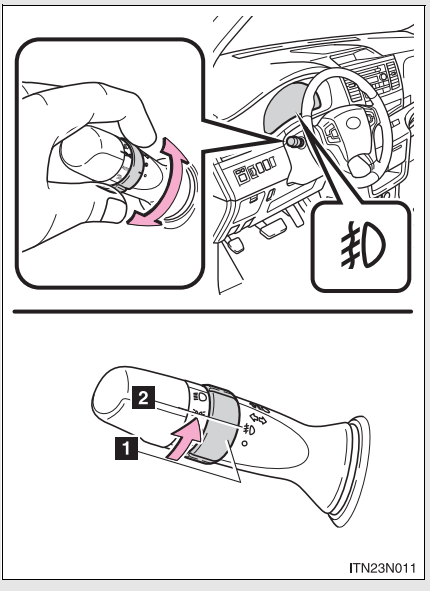


1 Turns the front fog lights off

2 Turns the front fog lights on

## ■ Fog lights can be used when

The headlights are on in low beam.

*: If equipped

**Intermittent windshield wipers with interval adjuster**

The wiper operation is selected by moving the lever as follows. When intermittent windshield wiper operation is selected, the wiper interval can be also adjusted.

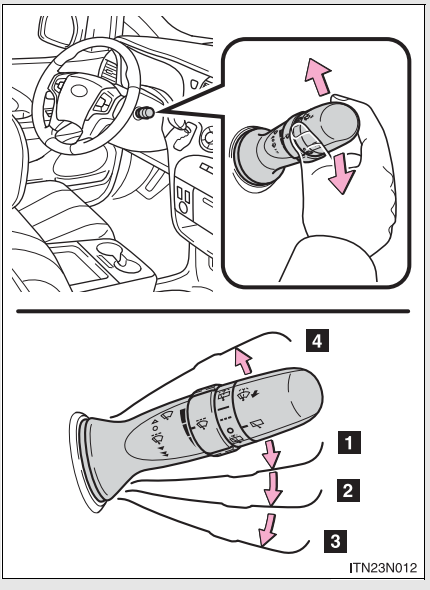


1 Intermittent windshield wiper operation

2 Low speed windshield wiper operation

3 High speed windshield wiper operation

4 Temporary operation

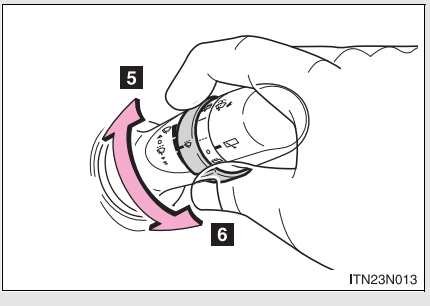


5 Increases the intermittent windshield wiper frequency

6 Decreases the intermittent windshield wiper frequency

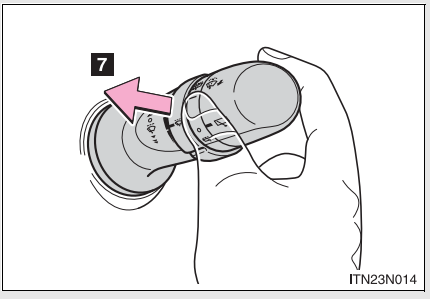


7 Washer/wiper dual operation

The wipers will automatically operate a couple of times after the washer squirts.

**Rain-sensing windshield wipers (if equipped)**

When “AUTO” is selected, the wipers will operate automatically when the sensor detects falling rain. The system automatically adjusts wiper timing in accordance with rain volume.

When “AUTO” is selected, the sensor sensitivity can be adjusted as follows by turning the switch ring:

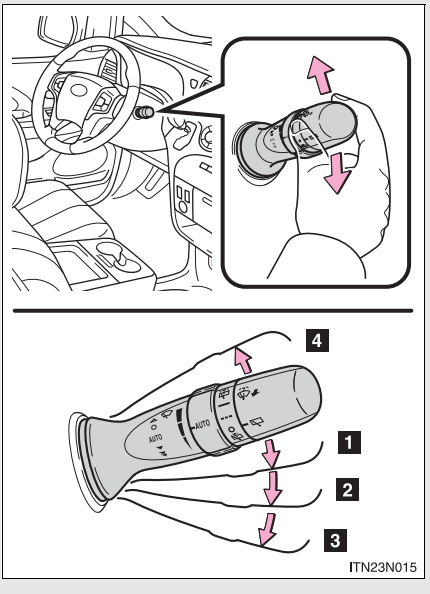


1 Rain-sensing wiper operation (“AUTO”)

2 Low speed wiper operation

3 High speed wiper operation

4 Temporary operation

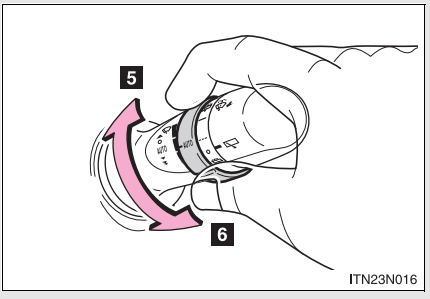


**5** Increases the sensitivity

**6** Decreases the sensitivity

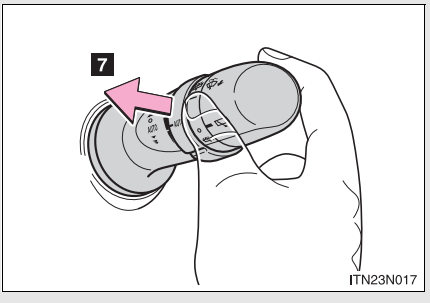


**7** Washer/wiper dual operation

The wipers will automatically operate a couple of times after the washer squirts.

■ **The windshield wipers and washer can be operated when**

Vehicles without a smart key system:
The engine switch is in the “ON” position.

Vehicles with a smart key system:
The “ENGINE START STOP” switch is in IGNITION ON mode.

■ **Raindrop sensor (vehicles with rain-sensing windshield wipers)**

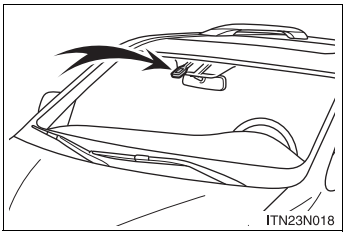


- The raindrop sensor judges the amount of raindrops.
- If the wiper switch is turned to “AUTO” position while the “ENGINE START STOP” switch is in IGNITION ON mode, the wiper will operate once to show that “AUTO” mode is activated.
- If the temperature of the raindrop sensor is 185°F (85°C) or higher, or 14°F (-10°C) or lower, automatic operation may not occur. In this case, operate the wipers in any mode other than “AUTO”.

■ **If no windshield washer fluid sprays**

Check that the washer nozzles are not blocked if there is washer fluid in the windshield washer fluid reservoir.

CAUTION

■ **Caution regarding the use of windshield wipers in “AUTO” mode**

The windshield wipers may operate unexpectedly if the sensor is touched or the windshield is subject to vibration in “AUTO” mode. Take care that your fingers etc. do not become caught in the windshield wipers.

NOTICE

■ **When the windshield is dry**

Do not use the wipers, as they may damage the windshield.

■ **When the washer fluid tank is empty**

Do not operate the switch continually as the washer fluid pump may overheat.

■ **When a nozzle becomes blocked**

In this case, contact your Toyota dealer immediately. Do not try to clear it with a pin or other object. The nozzle will be damaged.

# Rear window wiper and washer

**The wiper operation is selected by moving the lever as follows:**

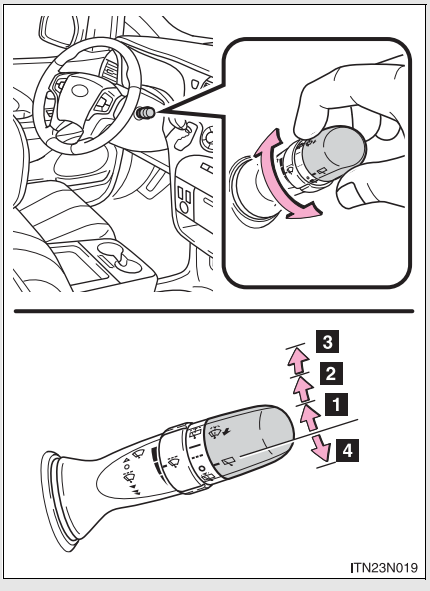


1 Intermittent window wiper operation

2 Normal window wiper operation

3 Washer/wiper dual operation

4 Washer/wiper dual operation

## The rear window wiper and washer can be operated when

Vehicles without a smart key system:
The engine switch is in the “ON” position.

Vehicles with a smart key system:
The “ENGINE START STOP” switch is in IGNITION ON mode.

NOTICE

**When the rear window is dry**

Do not use the wiper, as it may damage the rear window.

**When the washer fluid tank is empty**

Do not operate the switch continually as the washer fluid pump may overheat.

# Cruise control*

**Use cruise control to maintain a set speed without depressing the accelerator pedal.**

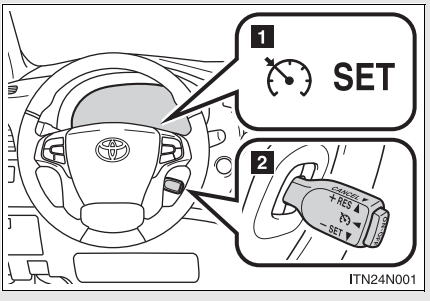


1 Indicators

2 Cruise control switch

## ■ Setting the vehicle speed

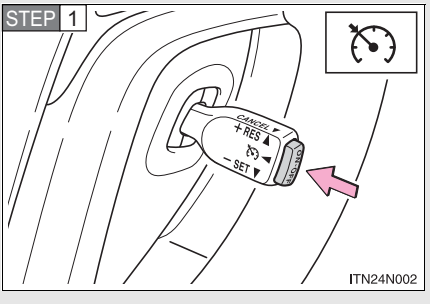


Press the “ON-OFF” button to activate the cruise control.

Press the button again to deactivate the cruise control.

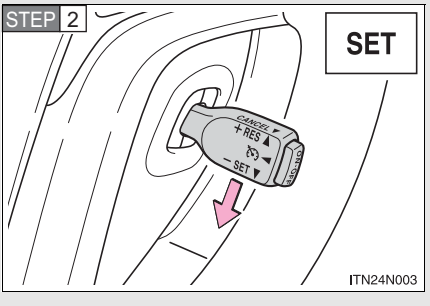


Accelerate or decelerate to the desired speed, and push the lever down to set the speed.

The “SET” indicator will come on.



*: If equipped

## Adjusting the set speed

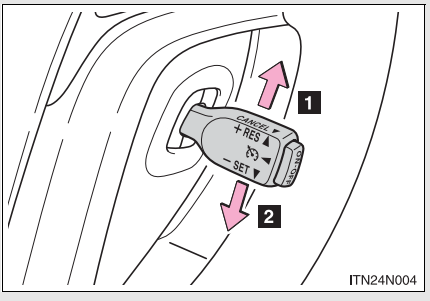


1 Increases the speed

2 Decreases the speed

Hold the lever until the desired speed setting is obtained.

Fine adjustment of the set speed can be made by lightly pushing the lever up or down and releasing it.

## Canceling and resuming the constant speed control

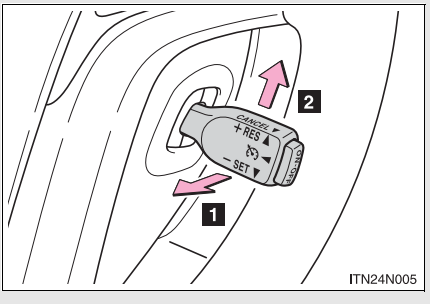


1 Pulling the lever toward you cancels the constant speed control.

The speed setting is also canceled when the brakes are applied.

2 Pushing the lever up resumes the constant speed control.

■ **Cruise control can be set when**

- The shift lever is in D or more than 4 range of S has been selected.
- Vehicle speed is above approximately 25 mph (40 km/h).

■ **Accelerating**

The vehicle can be accelerated normally. After acceleration, the set speed resumes.

■ **Automatic cruise control cancellation**

Cruise control will stop maintaining the vehicle speed in any of the following situations.

- Actual vehicle speed falls more than approximately 10 mph (16 km/h) below the preset vehicle speed.
  At this time, the memorized set speed is not retained.
- Actual vehicle speed is below approximately 25 mph (40 km/h).
- Enhanced VSC is activated.

■ **If the cruise control indicator light flashes**

Press the “ON-OFF” button once to deactivate the system, and then press the button again to reactivate the system.
If the cruise control speed cannot be set or if the cruise control cancels immediately after being activated, there may be a malfunction in the cruise control system. Have the vehicle inspected by your Toyota dealer.

CAUTION

■ **To avoid operating the cruise control by mistake**

Switch the cruise control off using the “ON-OFF” button when not in use.

■ **Situations unsuitable for cruise control**

Do not use cruise control in any of the following situations.
Doing so may result in loss of control and could cause an accident resulting in death or serious injury.

- In heavy traffic
- On roads with sharp bends
- On winding roads
- On slippery roads, such as those covered with rain, ice or snow
- On steep hills
  Vehicle speed may exceed the set speed when driving down a steep hill.
- When your vehicle is towing a trailer or during emergency towing

# Dynamic radar cruise control*

**Dynamic radar cruise control supplements conventional cruise control with a vehicle-to-vehicle distance control. In vehicle-to-vehicle distance control mode, the vehicle automatically accelerates or decelerates in order to maintain a set following distance from vehicles ahead.**

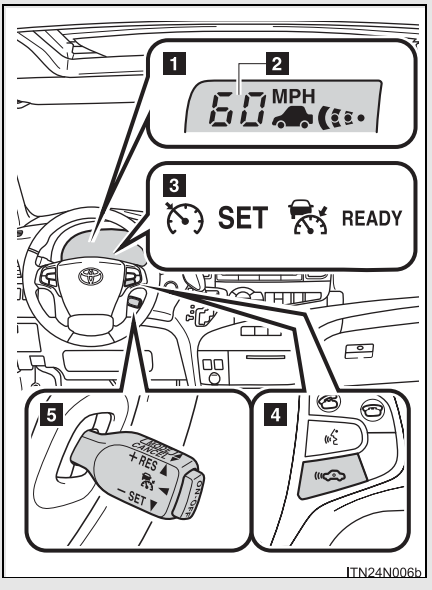


1 Display
2 Set speed
3 Indicator
4 Vehicle-to-vehicle distance button
5 Cruise control switch



*: If equipped

## Setting the vehicle speed (vehicle-to-vehicle distance control mode)

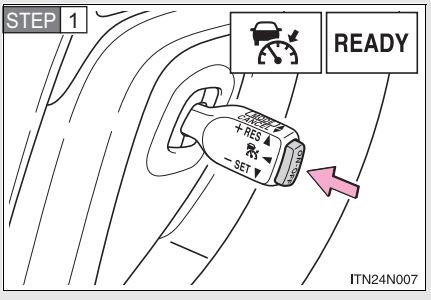


Press the “ON-OFF” button to activate the cruise control.

Press the button again to deactivate the cruise control.

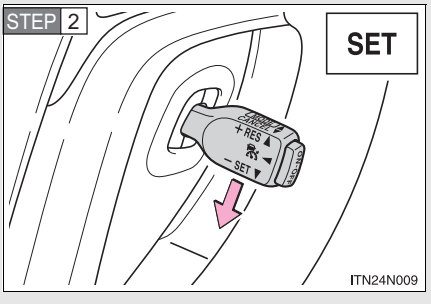


Accelerate or decelerate the vehicle to the desired speed, and push the lever down to set the speed.

“SET” indicator will come on.

## Adjusting the set speed

To change the set speed, operate the lever until the desired set speed is displayed.

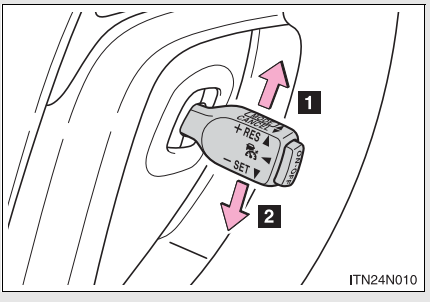


1 Increases the speed

2 Decreases the speed

Fine adjustment: Momentarily move the lever in the desired direction.

Large adjustment: Hold the lever in the desired direction.

In the vehicle-to-vehicle distance control mode, the set speed will be increased or decreased as follows:

**When the set speed is shown in “MPH”**

Fine adjustment: By approximately 1 mph (1.6 km/h) each time the lever is operated

Large adjustment: By approximately 5 mph (8 km/h) for each 0.75 seconds the lever is held

**When the set speed is shown in “km/h”**

Fine adjustment: By approximately 0.6 mph (1 km/h) each time the lever is operated

Large adjustment: By approximately 3.1 mph (5 km/h) for each 0.75 seconds the lever is held

In the constant speed control mode (→P. 281), the set speed will be increased or decreased as follows:

Fine adjustment: By approximately 1 mph (1.6 km/h) each time the lever is operated

Large adjustment: The set speed can be increased or decreased continually until the lever is released.

## Changing the vehicle-to-vehicle distance

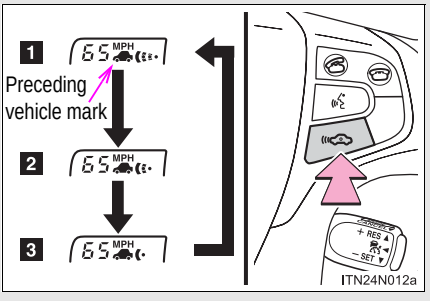


Pressing the button changes the vehicle-to-vehicle distance as follows:

1 Long

2 Medium

3 Short

Vehicles without a smart key system:
The vehicle-to-vehicle distance is set automatically to long mode when the engine switch is turned to the “ON” position.

Vehicles with a smart key system:
The vehicle-to-vehicle distance is set automatically to long mode when the “ENGINE START STOP” switch is turned to IGNITION ON mode.

If a vehicle is running ahead of you, the preceding vehicle mark will also be displayed.

### Canceling and resuming the speed control

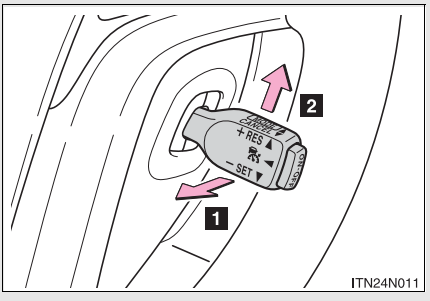


1 Pulling the lever toward you cancels the cruise control.

The speed setting is also canceled when the brakes are applied.

2 Pushing the lever up resumes the cruise control and returns vehicle speed to the set speed.

Resuming is available when the vehicle speed is more than approximately 25 mph (40 km/h).

## Driving in vehicle-to-vehicle distance control mode

This mode employs a sensor to detect the presence of vehicles up to approximately 400 ft. (120 m) ahead and to judge the distance between your vehicle and those the vehicle ahead of you.

Note that vehicle-to-vehicle distance will close in when traveling on long downhill slopes.

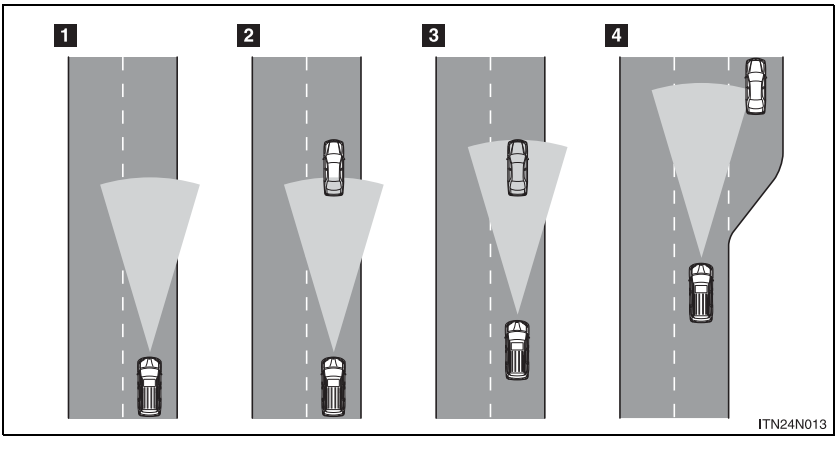

1 Example of constant speed cruising
When there are no vehicles ahead

The vehicle travels at the speed set by the driver. The desired vehicle-to-vehicle distance can also be set by operating the vehicle-to-vehicle distance control.

2 Example of deceleration cruising
When the vehicle ahead is driving slower than the set speed

When a vehicle is detected running ahead of you, the system automatically decelerates your vehicle. When a greater reduction in vehicle speed is necessary, the system applies the brakes. A warning tone warns you when the system cannot decelerate sufficiently to prevent your vehicle from closing in on the vehicle ahead.

3 Example of follow-up cruising
When following a vehicle driving slower than the set speed

The system continues follow-up cruising while adjusting for changes in the speed of the vehicle ahead in order to maintain the vehicle-to-vehicle distance set by the driver.

4 Example of acceleration
When there are no longer any vehicles ahead driving slower than the set speed

The system accelerates until the set speed is reached. The system then returns to constant speed cruising.

## Approach warning

When your vehicle is too close to a vehicle ahead, and sufficient automatic deceleration via the cruise control is not possible, the display will flash and the buzzer will sound to alert the driver. An example of this would be if another driver cuts in front of you while you are following a vehicle. Apply the brakes to ensure an appropriate vehicle-to-vehicle distance.

## Selecting conventional constant speed control mode

Dynamic radar cruise control can be used as conventional cruise control if you select constant speed control mode.

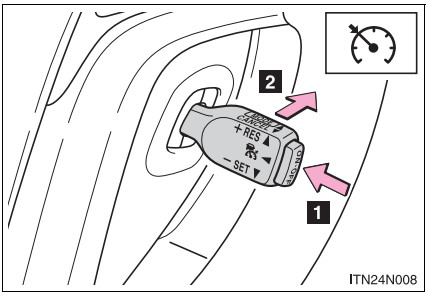


**1** Press the “ON-OFF” button to activate the cruise control.

Press the button again to deactivate the cruise control.

Vehicles without a smart key system:
Vehicle-to-vehicle distance control mode is always reset when the engine switch is turned to the “ON” position.

Vehicles with a smart key system:
Vehicle-to-vehicle distance control mode is always reset when the “ENGINE START STOP” switch is turned to IGNITION ON mode.

**2** Switch to constant speed control mode.
(Push the lever forward and hold for approximately one second.)

Cruise control indicator will come on.

Adjusting the speed setting:
→P. 277

Canceling and resuming the speed setting: →P. 279

■ **Dynamic radar cruise control can be set when**

- The shift lever is in D or more than 4 range of S has been selected.
- Vehicle speed is above approximately 30 mph (50 km/h).

■ **Switching modes**

The mode cannot be switched to constant speed control mode if vehicle-to-vehicle distance control mode has been used. The mode also cannot be switched from constant speed control to vehicle-to-vehicle distance control mode. Turn the system off by pressing the “ON-OFF” button, and turn it on again.

■ **Accelerating**

The vehicle can accelerate normally. After acceleration, the set speed resumes.
However, during vehicle-to-vehicle distance control mode, the vehicle speed may decrease below the set speed in order to maintain the distance to the vehicle ahead.

■ **Automatic cancelation of vehicle-to-vehicle distance control**

Vehicle-to-vehicle distance control driving is automatically canceled in the following situations:

- Actual vehicle speed falls below approximately 25 mph (40 km/h).
- Enhanced VSC is activated.
- The sensor cannot operate correctly because it is covered in some way.
- The windshield wipers are operating at high speed.

If vehicle-to-vehicle distance control driving is automatically canceled for any other reason, there may be a malfunction in the system. Contact your Toyota dealer.

### Automatic cancelation of constant speed control

The cruise control will stop maintaining the vehicle speed in the following situations:

- Actual vehicle speed is more than approximately 10 mph (16 km/h) below the set vehicle speed.
  At this time, the memorized set speed is not retained.
- Vehicle speed falls below approximately 25 mph (40 km/h).
- Enhanced VSC is activated.

### Vehicle-to-vehicle distance settings

Select a distance from the table below. Note that the distances shown correspond to a vehicle speed of 50 mph (80 km/h). Vehicle-to-vehicle distance increases/decreases in accordance with vehicle speed.

| Distance options | Vehicle-to-vehicle distance |
|---|---|
| Long | Approximately 160 ft. (50 m) |
| Medium | Approximately 130 ft. (40 m) |
| Short | Approximately 100 ft. (30 m) |

### Radar sensor and grille cover

Always keep the sensor and grille cover clean to ensure that the vehicle-to-vehicle distance control operates properly. (Some obstructions, such as snow, ice and plastic objects, cannot be detected by the obstruction sensor.) Dynamic radar cruise control is canceled if an obstruction is detected.

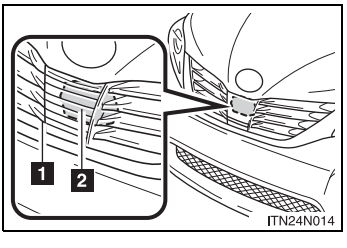


1 Grille cover

2 Radar sensor

### Warning lights and buzzers for dynamic radar cruise control

Warning lights and buzzers are used to indicate a system malfunction or to inform the driver of the need for caution while driving. (→P. 681)

### Approach warning

In the following instances, there is a possibility that the warnings will not occur:

- When the speed of the vehicle ahead matches or exceeds your vehicle speed
- When the vehicle ahead is traveling at an extremely slow speed
- Immediately after the cruise control speed was set
- At the instant the accelerator is applied

### Certification

**U.S.A.**

FCC ID: HYQDNMWR005
This device complies with Part 15 of the FCC Rules. Operation is subject to the following two conditions: (1) this device may not cause harmful interference, and (2) this device must accept any interference received, including interference that may cause undesired operation.

FCC WARNING
Changes or modifications not expressly approved by the party responsible for compliance could void the user's authority to operate the equipment.

Radio frequency radiation exposure Information:
This equipment complies with FCC radiation exposure limits set forth for an uncontrolled environment.
This equipment should be installed and operated with minimum distance of 20 cm between the radiator (antenna) and your body.
This transmitter must not be co-located or operating in conjunction with any other antenna or transmitter.

**Canada**

Operation is subject to the following two conditions: (1) this device may not cause interference, and (2) this device must accept any interference, including interference that may cause undesired operation of the device.

CAUTION

■ **Before using dynamic radar cruise control**

Do not overly rely on vehicle-to-vehicle distance control.
Be aware of the set speed. If automatic deceleration/acceleration is not appropriate, adjust the vehicle speed, as well as the distance between your vehicle and vehicles ahead by applying the brakes etc.

■ **Cautions regarding the driving assist systems**

Observe the following precautions.
Failure to do so may cause an accident resulting in death or serious injury.

- Assisting the driver to measure following distance
  The dynamic radar cruise control is only intended to help the driver in determining the following distance between the driver's own vehicle and a designated vehicle traveling ahead. It is not a mechanism that allows the careless or inattentive driving, and it is not a system that can assist the driver in low-visibility conditions. It is still necessary for driver to pay close attention to the vehicle's surroundings.
- Assisting the driver to judge proper following distance
  The dynamic radar cruise control determines whether the following distance between the driver's own vehicle and a designated vehicle traveling ahead is appropriate or not. It is not capable of making any other type of judgement. Therefore, it is absolutely necessary for the driver to remain vigilant and to determine whether or not there is a possibility of danger in any given situation.
- Assisting the driver to operate the vehicle
  The dynamic radar cruise control has no capability to prevent or avoid a collision with a vehicle traveling ahead. Therefore, if there is ever any danger, the driver must take immediate and direct control of the vehicle and act appropriately in order to ensure the safety of all involved.

■ **To avoid inadvertent cruise control activation**

Switch the cruise control off using the "ON-OFF" button when not in use.

CAUTION

■ **Situations unsuitable for dynamic radar cruise control**

Do not use dynamic radar cruise control in any of the following situations. Doing so may result in inappropriate speed control and could cause an accident resulting in death or serious injury.

- In heavy traffic
- On roads with sharp bends
- On winding roads
- On slippery roads, such as those covered with rain, ice and snow
- On steep downhills, or where there are sudden changes between sharp up and down gradients
  Vehicle speed may exceed the set speed when driving down a steep hill.
- At entrances to expressways
- When weather conditions are bad enough that they may prevent the sensors from functioning correctly (fog, snow, sandstorm, heavy rain, etc.)
- Where an approach warning buzzer is heard often
- When your vehicle is towing a trailer or during emergency towing

■ **When the sensor may not be correctly detecting the vehicle ahead**

Apply the brakes as necessary when any of the following types of vehicles are in front of you.
As the sensor may not be able to correctly detect these types of vehicles, the approach warning (→P. 280) will not be activated, and a fatal or serious accident may result.

- Vehicles that cut in suddenly
- Vehicles traveling at low speeds
- Vehicles that are not moving
- Vehicles with small rear ends (trailers with no load on board etc.)
- Motorcycles traveling in the same lane

CAUTION

■ **Conditions under which the vehicle-to-vehicle distance control may not function correctly**

Apply the brakes as necessary in the following conditions as the radar sensor may not be able to correctly detect vehicles ahead, and a fatal or serious accident may result:

- When water or snow thrown up by the surrounding vehicles hinders the functioning of the sensor
- When your vehicle is pointing upwards (caused by a heavy load in the luggage compartment etc.)
- When the road curves or when the lanes are narrow
- When steering wheel operation or your position in the lane is unstable
- When the vehicle ahead of you decelerates suddenly

■ **Handling the radar sensor**

Observe the following to ensure the cruise control system can function effectively.
Otherwise, the system may not function correctly and could result in an accident.

- Keep the sensor and front grille cover clean at all times.
  Clean the sensor and front grille cover with a soft cloth so you do not mark or damage them.
- Do not subject the sensor or surrounding area to a strong impact.
  If the sensor moves even slightly off position, the system may malfunction. If the sensor or surrounding area is subject to a strong impact, always have the area inspected and adjusted by a Toyota dealer.
- Do not disassemble the sensor.
- Do not attach accessories or stickers to the sensor, grille cover or surrounding area.
- Do not modify or paint the sensor and grille cover.
- Do not replace them with non-genuine parts.

# Intuitive parking assist*

**The distance from your vehicle to nearby obstacles when parallel parking or maneuvering into a garage is measured by the sensors and communicated via the multi-information display, the touch screen and a buzzer. Always check the surrounding area when using this system.**

## ■ Types of sensors

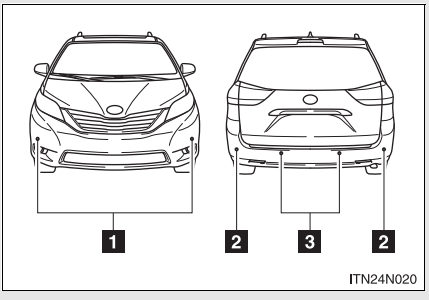


1 Front corner sensors (if equipped)

2 Rear corner sensors

3 Rear center sensors

## ■ Intuitive parking assist switch

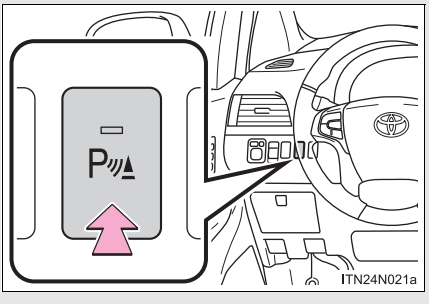


Turns the intuitive parking assist on/off

When on, the indicator light comes on and the buzzer sounds to inform the driver that the system is operational.

*: If equipped

## Display

When the sensors detect an obstacle, a graphic is shown on the multi information display or touch screen depending on the position and distance to the obstacle.

### Multi-information display

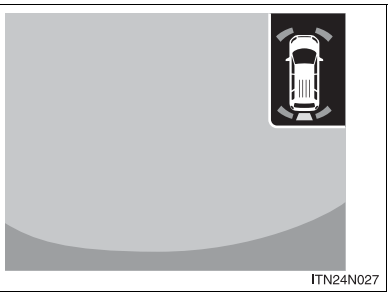


### Touch screen (with navigation system)*

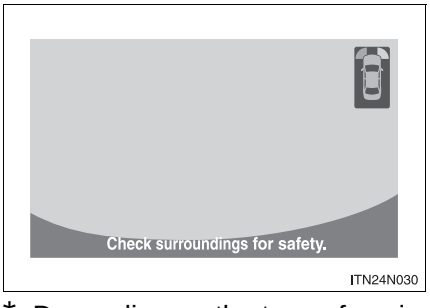


*: Depending on the type of navigation system.

## The distance display and buzzer

When a sensor detects an obstacle, the direction of and the approximate distance to the obstacle are displayed and the buzzer sounds.

### Corner sensor operation and distance to an obstacle

The system operates when the vehicle approaches within the following distances to an obstacle. The indicator flashes and the buzzer sounds when the system is operating.

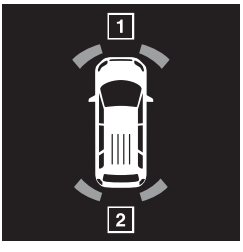


ITN24N028a

1 Front (if equipped)

| Approximate distance to obstacle | Indicator and buzzer / Color |
|---|---|
| 2.0 to 1.2 ft. (60 to 37.5 cm) | Intermittent / yellow |
| 1.2 to 0.8 ft. (37.5 to 25 cm) | Fast intermittent / yellow |
| 0.8 ft. (25 cm) or less | Continuous / red |

2 Rear

| Approximate distance to obstacle | Indicator and buzzer / Color |
|---|---|
| 2.8 to 1.2 ft. (85 to 37.5 cm) | Intermittent / yellow |
| 1.2 to 0.8 ft. (37.5 to 25 cm) | Fast intermittent / yellow |
| 0.8 ft. (25 cm) or less | Continuous / red |

## Back sensor operation and distance to an obstacle

The system operates when the vehicle approaches within the following distances to an obstacle. The indicator flashes and the buzzer sounds when the system is operating.

| Approximate distance to obstacle | Indicator and buzzer / Color |
|---|---|
| 5.9 to 2.8 ft. (180 to 85 cm) | Slow intermittent / yellow |
| 2.8 to 1.5 ft. (85 to 45 cm) | Intermittent / yellow |
| 1.5 to 1.1 ft. (45 to 35 cm) | Fast intermittent / yellow |
| 1.1 ft. (35 cm) or less | Continuous / red |

## Detection range of the sensors

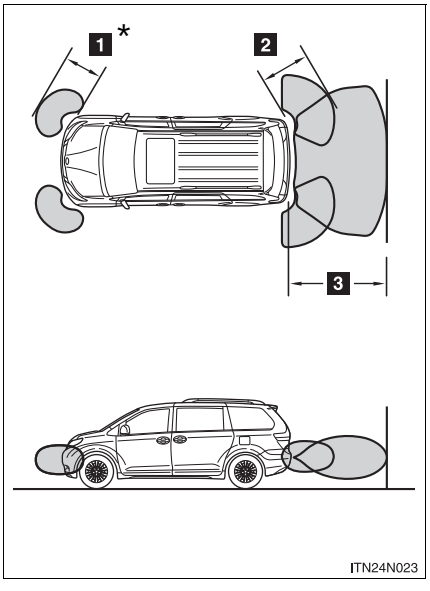


1 Approximately 2.0 ft. (60 cm)

2 Approximately 2.8 ft. (85 cm)

3 Approximately 5.9 ft. (180 cm)

The diagram shows the detection range of the sensors. Note that the sensors cannot detect obstacles that are extremely close to the vehicle.

The range of the sensors may change depending on the shape of the object etc.

*: if equipped

### Intuitive parking assist can be operated when

Vehicles without a smart key system: The engine switch is in the “ON” position.

Vehicles with a smart key system: The “ENGINE START STOP” switch is in IGNITION ON mode.

- Front corner sensors:
  - The shift lever is not in P.
  - The vehicle speed is approximately 6 mph (10 km/h) or less.
- Rear corner and back sensors:

  The shift lever is in R.

### Sensor detection information

- Certain vehicle conditions and the surrounding environment may affect the ability of the sensor to correctly detect obstacles. Particular instances where this may occur are listed below.
  - There is dirt, snow or ice on the sensor.
  - The sensor is frozen.
  - The sensor is covered in any way.
  - The vehicle is leaning considerably to one side.
  - On an extremely bumpy road, on an incline, on gravel, or on grass
  - The vicinity of the vehicle is noisy due to vehicle horns, motorcycle engines, air brakes of large vehicles, or other loud noises producing ultrasonic waves.
  - There is another vehicle equipped with parking assist sensors in the vicinity.
  - A sensor is coated with a sheet of spray or heavy rain.
  - The vehicle is equipped with a fender pole or radio antenna.
  - A bumper or sensor receives a strong impact.
  - The vehicle is approaching a tall or right-angled curb.
  - In harsh sunlight or intense cold weather

In addition to the examples above, there are instances in which, because of their shapes, signs and other objects may be judged by the sensor to be closer than they are.

- The shape of the obstacle may prevent the sensor from detecting it. Pay particular attention to the following obstacles:
  - Wires, fences, ropes etc.
  - Cotton, snow and other materials that absorb sound waves
  - Sharply-angled objects
  - Low obstacles
  - Tall obstacles with upper sections projecting outwards in the direction of your vehicle

### If the display flashes and a message is displayed

→P. 694

### Certification (Canada only)

This ISM device complies with Canadian ICES-001.

**CAUTION**

**Caution when using the Intuitive parking assist-sensor**

Observe the following precautions.
Failure to do so may result in the vehicle being unable to be driven safely and possibly cause an accident.

- Do not use the sensor at speeds in excess of 6 mph (10 km/h).
- Do not attach any accessories within the sensor range.

**NOTICE**

**Notes when washing the vehicle**

Do not apply intensive bursts of water or steam to the sensor area.
Doing so may result in the sensor malfunctioning.

# Rear view monitor system*

**The rear view monitor system assists the driver by displaying an image of the area behind the vehicle while reversing. The image is displayed in reverse on the screen. This reversed image is a similar image to the one on the inside rear view mirror.**

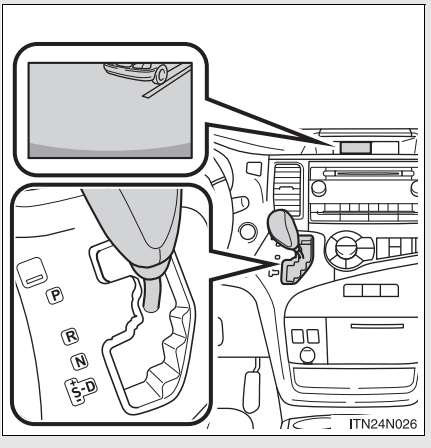


The rear view image is displayed when the shift lever is in the R position.

If the shift lever is shifted out of R, the screen returns to the previous one.



*: If equipped

## Displayed area

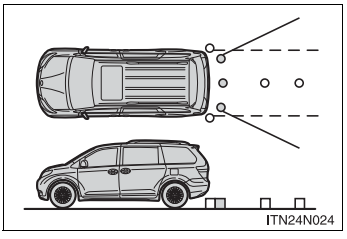


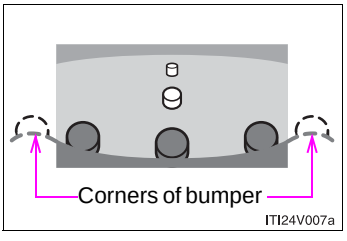


The area covered by the camera is limited. Objects that are close to either corner of the bumper or under the bumper cannot be seen on the screen.

The area displayed on the screen may vary depending on vehicle orientation or road conditions.

## Rear view monitor system camera

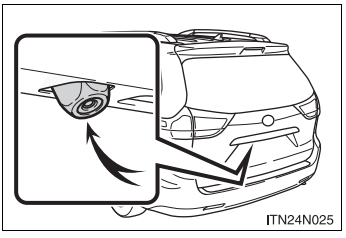


In the following cases, it may be difficult to see the images on the screen, even when the system is functioning correctly.

- The vehicle is in a dark area, such as at night.
- The temperature near the lens is extremely high or low.
- Water droplets are on the camera lens or humidity is high, such as when it rains.
- Foreign matter, such as snow and mud, adheres to the camera lens.
- The sun or headlights are shining directly into the camera lens.
- When the camera is used under fluorescent lights, sodium lights, mercury lights etc., the lights and the illuminated areas may appear to flicker.

## Smear effect

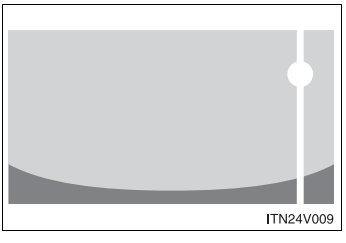


If a bright light, such as sunlight reflected off the vehicle body, is picked up by the camera, a smear effect* characteristic to the camera may occur.

*: Smear effect–A phenomenon that occurs when a bright light is picked up by the camera; when transmitted by the camera, the light source appears to have a vertical streak above and below it.

## Setting the rear view monitor system displays

**Vehicles with navigation system**

→“NAVIGATION SYSTEM OWNER’S MANUAL”

**Vehicles without navigation system**

→P. 244

CAUTION

**When using the rear view monitor system**

Observe the following precautions to avoid an accident that could result in death or serious injuries:

- Never depend solely on the monitor system when reversing.
- Always check visually and with the mirrors to confirm your intended path is clear.
- Depicted distances between objects and flat surfaces differ from actual distances.
- Do not use the system if the back door is open.

**Conditions which may affect the rear view monitor system**

- If the back of the vehicle has been hit, the camera's position and mounting angle may have changed. Have the vehicle inspected by your Toyota dealer.
- Rapid temperature changes, such as when hot water is poured on the vehicle in cold weather, may cause the system to function abnormally.
- If the camera lens is dirty, it cannot transmit a clear image. Rinse with water and wipe with a soft cloth. If the camera lens is extremely dirty, wash with a mild cleanser and rinse.
- The displayed image may be darker and moving images may be slightly distorted when the system is cold.
- When washing the vehicle, do not apply intensive bursts of water to the camera or camera area. Doing so may result in the camera malfunction.

# Driving assist systems

**To help enhance driving safety and performance, the following systems operate automatically in response to various driving situations. Be aware, however, that these systems are supplementary and should not be relied upon too heavily when operating the vehicle.**

## ■ ABS (Anti-lock Brake System)

Helps to prevent wheel lock when the brakes are applied suddenly, or if the brakes are applied while driving on a slippery road surface

## ■ Brake assist

Generates an increased level of braking force after the brake pedal is depressed, when the system detects a panic stop situation

## ■ VSC (Vehicle Stability Control)

Helps the driver to control skidding when swerving suddenly or turning on slippery road surfaces

## ■ Enhanced VSC (Enhanced Vehicle Stability Control)

Provides cooperative control of the ABS, TRAC, VSC and EPS.
Helps to maintain directional stability when swerving on slippery road surfaces by controlling steering performance.

## ■ TRAC (Traction Control)

Helps to maintain drive power and prevent the drive wheels from spinning when starting the vehicle or accelerating on slippery roads

## ■ Hill-start assist control (if equipped)

→P. 305

## ■ EPS (Electric Power Steering)

Employs an electric motor to reduce the amount of effort needed to turn the steering wheel

### ■ Active Torque Control 4WD (AWD models only)

Automatically switches from front-wheel drive to AWD (All-Wheel Drive) according to driving conditions, helping to ensure reliable handling and stability. Examples of conditions where the system will switch to AWD are when cornering, going uphill, starting off or accelerating, and when the road surface is slippery due to snow or rain etc.

### ■ VDIM (Vehicle Dynamics Integrated Management) (if equipped)

Provides integrated control of the ABS, brake assist, TRAC, VSC, hill-start assist control, and EPS systems
Helps to maintain vehicle stability when swerving on slippery road surfaces by controlling the brakes and engine output

### ■ PCS (Pre-Collision System) (if equipped)

→P. 307

## When the Enhanced VSC/TRAC systems are operating

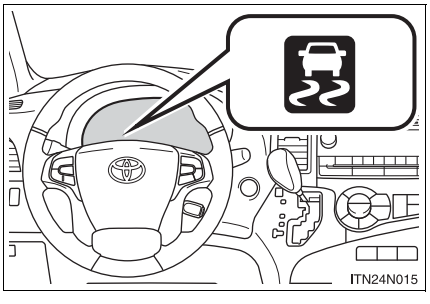


If the vehicle is in danger of slipping or if any of the drive wheels spins, the slip indicator light flashes to indicate that the Enhanced VSC/TRAC systems are operating.

## Disabling TRAC and VSC system

If the vehicle gets stuck in fresh snow or mud, TRAC and VSC may reduce power from the engine to the wheels. You may need to turn the system off to enable you to rock the vehicle in order to free it.

### ■ Turning off the TRAC system only

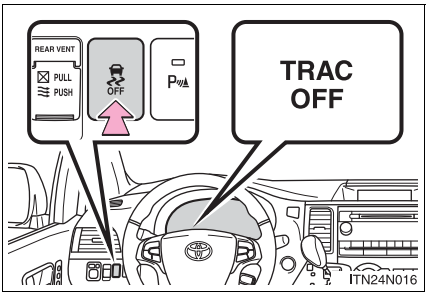


To turn the TRAC system off, quickly press and release the button.

The TRAC OFF indicator light will come on.

Push the button again to turn the system back on.

### ■ Turning off both TRAC and VSC systems

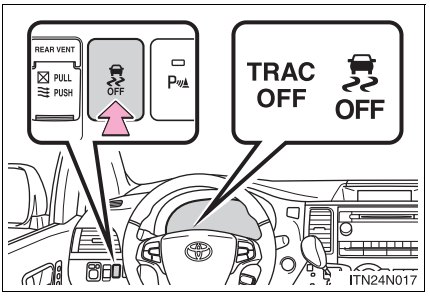


To turn the TRAC and VSC systems off, press and hold the button for more than 3 seconds while the vehicle is stopped.

The TRAC OFF indicator light and VSC OFF indicator light will come on.

Press the button again to turn the systems back on.

### Sounds and vibrations caused by ABS, brake assist, Enhanced VSC and TRAC

- A sound may be heard from the engine compartment when the engine is started or just after the vehicle begins to move. This sound does not indicate that a malfunction has occurred in any of these systems.
- Any of the following conditions may occur when the above systems are operating. None of these indicates that a malfunction has occurred.
  - Vibrations may be felt through the vehicle body and steering.
  - A motor sound may be heard after the vehicle comes to a stop.
  - The brake pedal may pulsate slightly after ABS is activated.
  - The brake pedal may move down slightly after ABS is activated.

### EPS operation sound

When the steering wheel is operated, a motor sound (whirring sound) may be heard. This does not indicate a malfunction.

### Reactivation of the TRAC and VSC systems after turning off the engine

Turning off the engine after turning off the TRAC and VSC systems will automatically reactivate them.

### Reactivation of the TRAC system linked to vehicle speed

When only the TRAC system is turned off, the TRAC system will turn on when vehicle speed increases. However, when both TRAC and VSC systems are turned off, the systems will not turn on even when vehicle speed increases.

### Reduced effectiveness of the EPS system

The effectiveness of the EPS system is reduced to prevent the system from overheating when there is frequent steering input over an extended period of time. The steering wheel may feel heavy as a result. Should this occur, refrain from excessive steering input or stop the vehicle and turn the engine off. The EPS system should return to normal within 10 minutes.

**CAUTION**

### ABS does not operate effectively when

- Tires with inadequate gripping ability are used (such as excessively worn tires on a snow covered road).
- The vehicle hydroplanes while driving at high speed on wet or slick roads.

### Stopping distance when ABS is operating will exceed that of normal conditions

The ABS is not designed to shorten the vehicle's stopping distance. Always maintain a safe distance from the vehicle in front of you in the following situations.

- When driving on dirt, gravel or snow-covered roads
- When driving with tire chains
- When driving over bumps in the road
- When driving over roads with potholes or roads with uneven surfaces

### TRAC may not operate effectively when

Directional control and power may not be achievable while driving on slippery road surfaces, even if the TRAC system is operating.
Do not drive the vehicle in conditions where stability and power may be lost.

CAUTION

**When Enhanced VSC is activated**

The slip indicator light flashes. Always drive carefully. Reckless driving may cause an accident. Exercise particular care when the indicator light flashes.

**When TRAC and VSC systems are turned off**

Be especially careful and drive at a speed appropriate to the road conditions. As these are the systems to ensure vehicle stability and driving force, do not turn the TRAC and VSC systems off unless necessary.

**Replacing tires**

Make sure that all tires are of the specified size, brand, tread pattern and total load capacity. In addition, make sure that the tires are inflated to the recommended tire pressure level.

The ABS and Enhanced VSC systems will not function correctly if different tires are installed on the vehicle.

Contact your Toyota dealer for further information when replacing tires or wheels.

**Handling of tires and suspension**

Using tires with any kind of problem or modifying the suspension will affect the driving assist systems, and may cause the system to malfunction.

**Active Torque Control 4WD system**

- The AWD system of this vehicle is intended to ensure driving stability on normal roads. It is not designed for use in demanding situations such as rally driving.
- Take care when driving on slippery road surfaces.

# Hill-start assist control*

**Hill-start assist control helps to prevent the vehicle from rolling backwards when starting on an incline or slippery slope.**

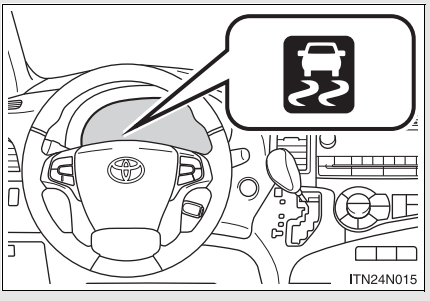


To engage hill-start assist control, further depress the brake pedal when the vehicle is stopped completely.

A buzzer will sound once to indicate that the system is activated. The slip indicator will also start flashing.



■ **Hill-start assist control can be operated when**

- The shift lever is in a position other than P.
- The parking brake is not applied.
- The accelerator pedal is not depressed.

■ **Hill-start assist control**

● While hill-start assist control is operating, the brakes remain automatically applied after the driver releases the brake pedal. The stop lights and the high mounted stoplight turn on.

● Hill-start assist control operates for about 2 seconds after the brake pedal is released.

● If the slip indicator does not flash and the buzzer does not sound when the brake pedal is further depressed, slightly reduce the pressure on the brake pedal (do not allow the vehicle to roll backward) and then firmly depress it again. If the system still does not operate, check if the operating conditions explained above have been met.

*: If equipped

### Hill-start assist control buzzer

- When hill-start assist control is activated, the buzzer will sound once.
- In the following situations, hill-start assist control will be canceled and the buzzer will sound twice.
  - No attempt is made to drive the vehicle within approximately 2 seconds of releasing the brake pedal.
  - The shift lever is moved to P.
  - The parking brake is applied.
  - The brake pedal is depressed again.
  - The brake pedal has been depressed for more than approximately 3 minutes.

### If the slip indicator comes on...

It may indicate a malfunction in the system. Contact your Toyota dealer.

**CAUTION**

### Hill-start assist control

- Do not overly rely on hill-start assist control. Hill-start assist control may not operate effectively on extremely steep inclines or roads covered in ice.
- Unlike the parking brake, hill-start assist control is not intended to hold the vehicle stationary for an extended period of time. Do not attempt to use hill-start assist control to hold the vehicle on an incline for an extended period of time, as doing so may lead to an accident.

When the radar sensor detects a possibility of a frontal collision, the systems such as the brakes and seat belts are automatically engaged to lessen impact and injuries to occupants as well as vehicle damage.

■ **Pre-collision seat belts (front seat belts only)**

If the pre-collision sensor detects that a collision is unavoidable, the pre-collision system will retract the seat belt before the collision occurs. The same will happen if the driver makes an emergency braking or loses control of the vehicle. (→P. 125)
However, when the VSC system is disabled, the system will not operate in the event of skidding.

■ **Pre-collision brake assist**

When there is a possibility of a frontal collision, the system applies greater braking force in relation to how strongly the brake pedal is depressed.

■ **Pre-collision braking**

When there is a high possibility of a frontal collision, the system warns the driver using a warning light, warning display and buzzer. If the system determines that a collision is unavoidable, the brakes are automatically applied to reduce the collision speed. Pre-collision braking can be disabled using the pre-collision braking off button.



*: If equipped

## Disabling pre-collision braking

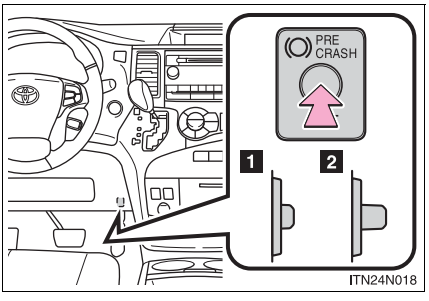


1 Pre-collision braking disabled

2 Pre-collision braking enabled

The “PCS” warning light flashes when pre-collision braking is disabled.

## Radar sensor

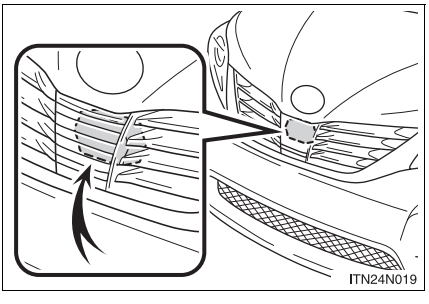


The radar sensor detects vehicles or other obstacles on or near the road ahead and determines whether a collision is imminent based on the position, speed, and heading of the obstacles.

### ■The pre-collision system is operational when

●Pre-collision seat belts (linked to the radar sensor):

- Vehicle speed is greater than about 3 mph (5 km/h).
- The speed at which your vehicle is approaching the obstacle or oncoming vehicle is greater than about 18 mph (30 km/h).
- The front occupants are wearing a seat belt.

●Pre-collision seat belts (linked to brake operation):

- Vehicle speed greater than about 18 mph (30 km/h).
- The system detects sudden braking or skidding.
- The front occupants are wearing a seat belt.

●Pre-collision brake assist:

- Vehicle speed is greater than about 18 mph (30 km/h).
- The speed at which your vehicle is approaching the obstacle or the vehicle running ahead of you is greater than about 18 mph (30 km/h).
- The brake pedal is depressed.

●Pre-collision braking:

- The pre-collision braking off button is not pressed.
- Vehicle speed is greater than about 9 mph (15 km/h).
- The speed at which your vehicle is approaching the obstacle or the vehicle running ahead of you is greater than about 9 mph (15 km/h).

### Conditions that may trigger the system even if there is no possibility of a collision

- When there is an object by the roadside at the entrance to a curve
- When passing an oncoming vehicle on a curve
- When driving over a narrow iron bridge
- When there is a metal object on the road surface
- When driving on an uneven road surface
- When passing an oncoming vehicle on a left-turn
- When your vehicle rapidly closes on the vehicle in front
- When there is an overhead bridge, sign or billboard ahead
- When there are excessive changes in the vehicle height (when it tilts forwards or backwards)
- When there is an abnormality in the radar sensor
- When an overhead metal object can be seen at the top of an uphill road
- When passing through an electronic toll collection gate (only in countries with electronic toll collection)

When the system is activated in the situations described above, there is also a possibility that the seat belts will retract quickly and the brakes will be applied with a force greater than normal. When the seat belt is locked in the restricted position, stop the vehicle in a safe place, release the seat belt and refasten it.

### Obstacles not detected

The sensor cannot detect plastic obstacles such as traffic cones. There may also be occasions when the radar sensor cannot detect pedestrians, animals, bicycles, motorcycles, trees, or snowdrifts.

### When there is a malfunction in the system

Warning lights will turn on or flash. (→P. 681)

## Certification

### U.S.A.

FCC ID: HYQDNMWR005
This device complies with Part 15 of the FCC Rules. Operation is subject to the following two conditions: (1) this device may not cause harmful interference, and (2) this device must accept any interference received, including interference that may cause undesired operation.

FCC WARNING
Changes or modifications not expressly approved by the party responsible for compliance could void the user's authority to operate the equipment.

Radio frequency radiation exposure Information:
This equipment complies with FCC radiation exposure limits set forth for an uncontrolled environment.
This equipment should be installed and operated with minimum distance of 20 cm between the radiator (antenna) and your body.
This transmitter must not be co-located or operating in conjunction with any other antenna or transmitter.

### Canada

Operation is subject to the following two conditions: (1) this device may not cause interference, and (2) this device must accept any interference, including interference that may cause undesired operation of the device.

CAUTION

**■ Limitations of the pre-collision system**

Do not overly rely on the pre-collision system. Always drive safely, taking care to observe your surroundings and checking for any obstacles or other road hazards.

**■ Cautions regarding the assist contents of the system**

By means of alarms and brake control, the pre-collision system is intended to assist the driver in avoiding collisions through the process of “LOOK-JUDGE-ACT”.
There are limits to the degree of assistance the system can provide, so please keep in mind the following important points.

- Assisting the driver in watching the road
  The pre-collision system is only able to detect obstacles directly in front of the vehicle, and only within a limited range. It is not a mechanism that allows careless or inattentive driving, and it is not a system that can assist the driver in low-visibility conditions. It is still necessary for the driver to pay close attention to the vehicle’s surroundings.
- Assisting the driver in making correct judgment
  When attempting to estimate the likelihood of a collision, the only data available to the pre-collision system is that from obstacles it has detected directly in front of the vehicle. Therefore, it is absolutely necessary for the driver to remain vigilant and to determine whether or not there is a possibility of collision in any given situation.
- Assisting the driver in taking action
  The pre-collision system’s braking assist feature is designed to help reduce the severity of a collision, and so only acts when the system has judged that a collision is unavoidable. This system by itself is not capable of automatically avoiding a collision or bringing the vehicle to a stop safety. For this reason, when encountering a dangerous situation the driver must take direct and immediate action in order to ensure the safety of all involved.

CAUTION

**Handling the radar sensor**

Observe the following to ensure the pre-collision system can function effectively:

- Keep the sensor and front grille clean at all times.
  Clean the sensor and front grille with a soft cloth so you do not mark or damage them.
- Do not subject the sensor or surrounding area to a strong impact.
  If the sensor moves even slightly off position, the system may malfunction. If the sensor or surrounding area is subject to a strong impact, always have the area inspected and adjusted by your Toyota dealer.
- Do not disassemble the sensor.
- Do not attach accessories or stickers to the sensor, grille or surrounding area.
- Do not modify or paint the sensor and grille cover.

**Take notice of the following information about storage precautions, cargo capacity and load:**

- Stow cargo and luggage in the luggage compartment whenever possible.
- Be sure all items are secured in place.
- To maintain vehicle balance while driving, position luggage evenly within the luggage compartment.
- For better fuel economy, do not carry unnecessary weight.

## Capacity and distribution

Cargo capacity depends on the total weight of the occupants.

(Cargo capacity) = (Total load capacity) - (Total weight of occupants)

**Steps for Determining Correct Load Limit** —

(1) Locate the statement “The combined weight of occupants and cargo should never exceed XXX kg or XXX lbs.” on your vehicle’s placard.

(2) Determine the combined weight of the driver and passengers that will be riding in your vehicle.

(3) Subtract the combined weight of the driver and passengers from XXX kg or XXX lbs.

(4) The resulting figure equals the available amount of cargo and luggage load capacity.

For example, if the “XXX” amount equals 1400 lbs. and there will be five 150 lb passengers in your vehicle, the amount of available cargo and luggage load capacity is 650 lbs. (1400 - 750 (5 × 150) = 650 lbs.)

(5) Determine the combined weight of luggage and cargo being loaded on the vehicle. That weight may not safely exceed the available cargo and luggage load capacity calculated in Step 4.

(6) If your vehicle will be towing a trailer, load from your trailer will be transferred to your vehicle. Consult this manual to determine how this reduces the available cargo and luggage load capacity of your vehicle. (→P. 734)

## Example based on your vehicle

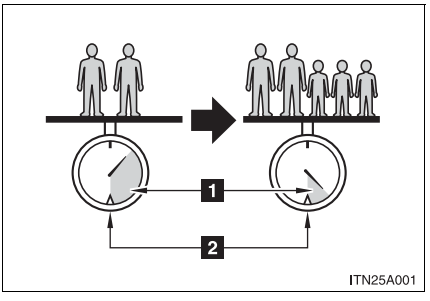


1 Cargo capacity

2 Total load capacity

When 2 people with the combined weight of 366 lb. (166 kg) are riding in your vehicle, which has a total load capacity of 1660 lb. (750 kg)*, the available amount of cargo and luggage load capacity will be as follows:

1660 lb. - 366 lb. = 1294 lb. (750 kg - 166 kg = 584 kg)

In this condition, if 3 more passengers with the combined weight of 388 lb. (176 kg) get on, the available cargo and luggage load will be reduced as follows:

1294 lb. - 388 lb. = 906 lb. (584 kg - 176 kg = 408 kg)

*: The capacity weight varies depending on the vehicle model. (→P. 734)

As shown in the example above, if the number of occupants increases, the cargo and luggage load will be reduced by an amount that equals the increased weight due to the additional occupants. In other words, if an increase in the number of occupants causes an excess of the total load capacity (combined weight of occupants plus cargo and luggage load), you must reduce the cargo and luggage on your vehicle.

## Roof luggage carrier (if equipped)

### Roof luggage carrier components

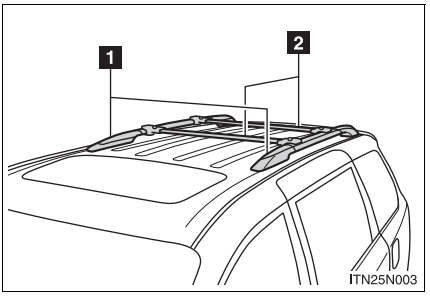


1 Roof rails

2 Cross rails

### Adjusting the position of cross rails

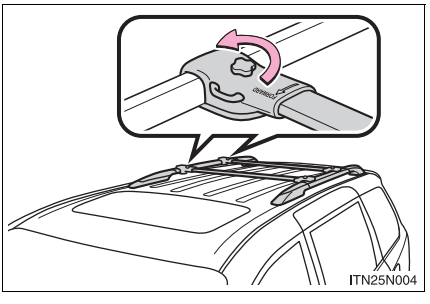


Turn the knobs counterclockwise to release the cross rails.

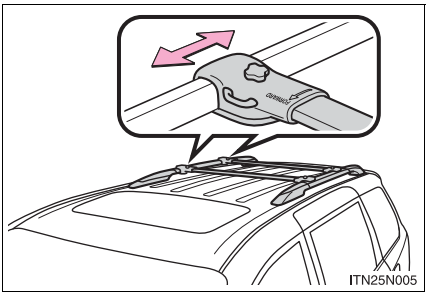


Slide the cross rails to the appropriate position for loading luggage and turn the knobs clockwise to tighten the cross rails securely.

## Seating configuration variation

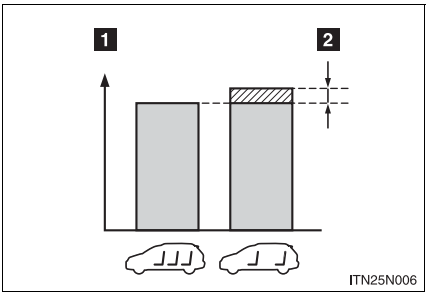


1 Cargo capacity

2 Weight of the removed second seat

If removing the second seats, it is possible to load extra cargo equal to the weight of the removed seats.

(Cargo capacity) = (Total load capacity) - (Total weight of occupants) + (Weight of the removed second seats)

Second seats weight:

**7-passenger models**

Tip-up seat, fabric: 45 lb. (21 kg)
Tip-up seat, leather: 47 lb. (22 kg)
Ottoman seat: 83 lb. (37 kg)

**8-passenger models**

Right side, fabric: 45 lb. (21 kg)
Right side, leather: 47 lb. (22 kg)
Left side, fabric: 80 lb. (36 kg)
Left side, leather: 83 lb. (37 kg)

CAUTION

■ **Things that must not be carried in the luggage compartment**

The following things may cause a fire if loaded in the luggage compartment:

- Receptacles containing gasoline
- Aerosol cans

■ **Storage precautions**

Observe the following precautions.
Failing to do so may result in death or serious injury.

- Stow cargo and luggage in the luggage compartment whenever possible.
- Do not stack anything in the luggage compartment higher than the seatbacks. Such items may be thrown about and possibly injure people in the vehicle in the event of sudden braking or in an accident.
- Do not place cargo or luggage in or on the following locations as the item may get under the brake or accelerator pedal and prevent the pedals from being depressed properly, block the driver's vision, or hit the driver or passengers, causing an accident.
  - Driver's feet
  - Front passenger or rear seats (when stacking items)
  - Instrument panel
  - Dashboard
  - Auxiliary box or tray that has no lid
- Secure all items in the occupant compartment, as they may shift and injure someone during sudden braking, sudden swerving or an accident.
- When you fold down the rear seats, long items should not be place directly behind the front seats.
- Never allow anyone to ride in the luggage compartment. It is not designed for passengers. They should ride in their seats with their seat belts properly fastened. Otherwise, they are much more likely to suffer death or serious bodily injury, in the event of sudden braking, sudden swerving or an accident.

CAUTION

■ **Capacity and distribution**

- Do not exceed the maximum axle weight rating or the total vehicle weight rating.
- Even if the total load of occupant's weight and the cargo load is less than the total load capacity, do not apply the load unevenly.
  Improper loading may cause deterioration of steering or braking control which may cause death or serious injury.

■ **Cross rail adjustment**

Make sure the cross rails are locked securely by pushing forward and rearward them.
Failure to do so may cause an unexpected accident.

■ **When loading cargo**

Observe the following precautions:

- Place the cargo so that its weight is distributed evenly between the front and rear axles.
- If loading long or wide cargo, never exceed the vehicle overall length or width. (→P. 734)
- Before driving, make sure the cargo is securely fastened on the roof luggage carrier.
- Loading cargo on the roof luggage carrier will make the center of gravity of the vehicle higher. Avoid high speeds, sudden starts, sharp turns, sudden braking or abrupt maneuvers, otherwise it may result in loss of control or vehicle rollover due to failure to operate this vehicle correctly and result in death or serious injury.
- If driving for a long distance, on rough roads, or at high speeds, stop the vehicle now and then during the trip to make sure the cargo remains in its place.
- Do not exceed 150 lb. (68 kg) cargo weight on the roof luggage carrier.

NOTICE

**When loading cargo**

Be careful not to scratch the surface of the moon roof.

# Vehicle load limits

**Vehicle load limits include total load capacity, seating capacity, towing capacity and cargo capacity.**

## ■ Total load capacity: (→P. 734)

Total load capacity means the combined weight of occupants, cargo and luggage.

## ■ Seating capacity: 7 or 8 occupants (Front 2, Rear 5 or 6)

Seating capacity means the maximum number of occupants whose estimated average weight is 150 lb. (68 kg) per person.

## ■ Towing capacity

**1AR-FE engine**

1000 lb. (454 kg)

**2GR-FE engine**

Without towing package: 1500 lb. (680 kg)
With towing package: 3500 lb. (1588 kg)

Towing capacity means the maximum gross trailer weight (trailer weight plus its cargo weight) that your vehicle is able to tow.

## ■ Cargo capacity

Cargo capacity may increase or decrease depending on the weight and the number of occupants.

### Total load capacity and seating capacity

These details are also described on the tire and loading information label. (→P. 636)

**CAUTION**

### Overloading the vehicle

Observe the total load capacity when you load the vehicle. (→P. 734) Otherwise, it may not only cause damage to the tires, but also degrade steering and braking ability, resulting in an accident.

# Winter driving tips

**Carry out the necessary preparations and inspections before driving the vehicle in winter. Always drive the vehicle in a manner appropriate to the prevailing weather conditions.**

## Pre-winter preparations

- Use fluids that are appropriate to the prevailing outside temperatures.
  - Engine oil
  - Engine coolant
  - Washer fluid
- Have a service technician inspect the level and specific gravity of battery electrolyte.
- Have the vehicle fitted with four snow tires or purchase a set of tire chains for the front tires.

  Ensure that all tires are the same size and brand, and that chains match the size of the tires.

## Before driving the vehicle

Perform the following according to the driving conditions:

- Do not try to forcibly open a window or move a wiper that is frozen. Pour warm water over the frozen area to melt the ice. Wipe away the water immediately to prevent it from freezing.
- To ensure proper operation of the climate control system fan, remove any snow that has accumulated on the air inlet vents in front of the windshield.
- Remove any ice that has accumulated on the vehicle chassis.
- Periodically check for and remove any excess ice or snow that may have accumulated in the wheel well or on the brakes.

■ **When driving the vehicle**

Accelerate the vehicle slowly and drive at a reduced speed suitable to road conditions.

■ **When parking the vehicle**

Park the vehicle and move the shift lever to P without setting the parking brake. The parking brake may freeze up, preventing it from being released. If necessary, block the wheels to prevent inadvertent sliding or creeping.



## Selecting tire chains

Use the tire chains of correct size and type.

Use SAE Class “S” type radial tire chains, with the exception of radial cable chains or V-bar type chains.

## Regulations on the use of tire chains

Regulations regarding the use of tire chains vary depending on location and type of road. Always check local regulations before installing chains.

### Tire chain installation

Observe the following precautions when installing and removing chains.

- Install and remove tire chains in a safe location.
- Install tire chains on the front tires only. Do not install tire chains on the rear tires.
- Install tire chains on front tires as tightly as possible. Retighten chains after driving 1/4 - 1/2 mile (0.5 - 1.0 km).
- Install tire chains following the instructions provided with the tire chains.

**CAUTION**

### Driving with snow tires

Observe the following precautions to reduce the risk of accidents.
Failing to do so may result in a loss of vehicle control and cause death or serious injury.

- Use tires of the size specified.
- Maintain the recommended level of air pressure.
- Do not drive in excess of 75 mph (120 km/h), regardless of the type of snow tires being used.
- Use snow tires on all, not just some wheels.

CAUTION

**Driving with tire chains**

Observe the following precautions to reduce the risk of accidents.
Failing to do so may result in the vehicle being unable to be driven safely, and may cause death or serious injury.

- Do not drive in excess of the speed limit specified for the tire chains being used or 30 mph (50 km/h), whichever is lower.
- Avoid driving on bumpy road surfaces or over potholes.
- Avoid sudden turns and braking, as use of chains may adversely affect vehicle handling.
- Slow down sufficiently before entering a curve to ensure that vehicle control is maintained.

NOTICE

**Repairing or replacing snow tires**

Request repairs of or replacement of snow tires from Toyota dealers or legitimate tire retailers.
This is because the removal and attachment of snow tires affects the operation of the tire pressure warning valves and transmitters.

**Fitting tire chains**

The tire pressure warning valves and transmitters may not function correctly when tire chains are fitted.

**Your vehicle is designed primarily as a passenger-carrying vehicle. Towing a trailer will have an adverse effect on handling, performance, braking, durability, and fuel consumption. For your safety and the safety of others, do not overload the vehicle or trailer.**

**To tow a trailer safely, use extreme care and drive the vehicle in accordance with the trailer's characteristics and operating conditions.**
**The vehicle stability and braking performance are affected by trailer stability, brake setting and performance, and the hitch.**

**Toyota warranties do not apply to damage or malfunction caused by towing a trailer for commercial purposes.**

Contact your Toyota dealer for further information about additional requirements such as a towing kit, etc.

## Weight limits

Confirm that the gross trailer weight, gross combination weight, gross vehicle weight, gross axle weight and trailer tongue load are all within the limits.

- The gross trailer weight must never exceed towing capacity described below.

  **1AR-FE engine**

  1000 lb. (454 kg)

  **2GR-FE engine**

  Without towing package: 1500 lb. (680 kg)
  With towing package: 3500 lb. (1588 kg)

- The gross combination weight must never exceed the GCWR described below.

**1AR-FE engine**

6350 lb. (2880 kg)

**2GR-FE engine**

**2WD models:**

7200 lb. (3266 kg)*1
8900 lb. (4037 kg)*2

**AWD models:**

7290 lb. (3307 kg)*1
8990 lb. (4078 kg)*2

*1: Without towing package
*2: With towing package

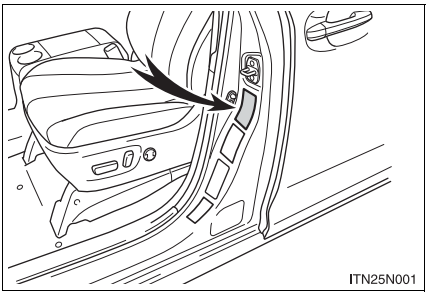


- The gross vehicle weight must never exceed the GVWR indicated on the Certification Label.
- The gross axle weight on each axle must never exceed the GAWR indicated on the Certification Label.

## Towing related term

| Towing related term | Meaning |
|---|---|
| GVWR (Gross Vehicle Weight Rating) | The maximum allowable gross vehicle weight. The gross vehicle weight is the total weight of the vehicle. When towing a trailer, it is the sum of the vehicle weight (including the occupants, cargo and any optional equipment installed on the vehicle) and the tongue load. |
| GAWR (Gross Axle Weight Rating) | The maximum allowable gross axle weight.<br>The gross axle weight is the load placed on each axle (front and rear). |
| GCWR (Gross Combination Weight Rating) | The maximum allowable gross combination weight. The gross combination weight is the sum of the total vehicle weight (including the occupants, cargo and any optional equipment installed on the vehicle) and the weight of the trailer being towed (including the cargo in the trailer). |
| Gross trailer weight | The sum of the trailer weight and the weight of the cargo in the trailer. |
| Towing capacity | The maximum allowable gross trailer weight. Towing capacity is calculated considering base vehicle with necessary vehicle equipment and occupants. Additional optional equipment, passengers and cargo in the vehicle will reduce the towing capacity, gross trailer weight includes the trailer, cargo and necessary equipment for towing. |
| Tongue load | The load placed on the trailer hitch ball. |

## Trailer tongue load

- A recommended tongue load varies in accordance with the types of trailers or towing as described below.
- In order to ensure the recommended values shown below, the trailer must be loaded by referring to the following instructions.
  The trailer cargo load should be distributed so that the tongue load is 9 to 11 % of the gross trailer weight.
  (Tongue load / Gross trailer weight × 100 = 9 to 11 %)

  If the gross trailer weight is over 2000 lbs. (900 kg), it is necessary to use a sway control device with sufficient capacity.

The gross trailer weight and tongue load can be measured with platform scales found at a highway weighing station, building supply company, trucking company, junk yard, etc.

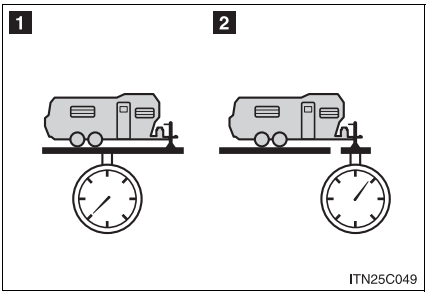


1 Gross trailer weight
2 Tongue load

## Hitch

Trailer hitch assemblies have different weight capacities established by the hitch manufacturer. Even though the vehicle may be rated for towing a higher weight, the operator must never exceed the maximum weight rating specified for the trailer hitch.

## Selecting trailer ball

Use the correct trailer ball for your application.

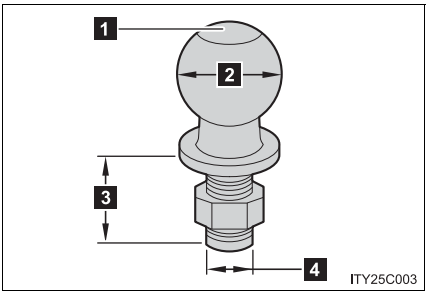


**1** Trailer ball load rating

Matches or exceeds the gross trailer weight rating of the trailer.

**2** Ball diameter

Matches the size of the trailer coupler. Most couplers are stamped with the required trailer ball size.

**3** Shank length

Protrudes beyond the bottom of the lock washer and nut at least 2 threads.

**4** Shank diameter

Matches the ball mount hole diameter size.

## Trailer towing tips

Your vehicle will handle differently when towing a trailer. The 3 main causes of vehicle-trailer accidents are driver error, excessive speed and improper trailer loading. Keep the following in mind when towing:

- Before starting out, check the trailer lights and the vehicle-trailer connections. Recheck after driving a short distance.
- Practice turning, stopping and reversing with the trailer attached in an area away from traffic until you become accustomed to the feel of the vehicle.
- Reversing with a trailer attached is difficult and requires practice. Grip the bottom of the steering wheel and move your hand to the left to move the trailer to the left. Move your hand to the right to move the trailer to the right. (This is generally opposite to reversing without a trailer attached.) Avoid sharp or prolonged turning. Have someone guide you when reversing to reduce the risk of an accident.
- As stopping distance is increased when towing a trailer, vehicle-to-vehicle distance should be increased. For each 10 mph (16 km/h) of speed, allow at least one vehicle and trailer length.
- Avoid sudden braking as you may skid, resulting in jackknifing and loss of control. This is especially true on wet or slippery surfaces.
- Avoid jerky starts or sudden acceleration.

- Avoid jerky steering and sharp turns, and slow down before making turns.
- Note that when making a turn, the trailer wheels will be closer than the vehicle wheels to the inside of the turn. Compensate by making a larger than normal turning radius.
- Crosswinds and rough roads will adversely affect handling of your vehicle and trailer, causing sway. Periodically check the rear to prepare for being passed by large trucks or buses, which may cause your vehicle and trailer to sway. If swaying occurs, firmly grip the steering wheel, reduce speed immediately but gradually, and steer straight ahead. Never increase speed. If you make no extreme correction with the steering or brakes, your vehicle and trailer will stabilize.
- Take care when passing other vehicles. Passing requires considerable distance. After passing a vehicle, do not forget the length of your trailer, and be sure you have plenty of room before changing lanes.
- In order to maintain engine braking efficiency when driving on a long steep downgrade, do not use overdrive. Transmission shift range position must be in “4”, in “S” mode.
- Due to the added load of the trailer, your vehicle’s engine may overheat on hot days (at temperatures over 85°F [30°C]) when driving up a long or steep grade. If the engine coolant temperature gauge indicates overheating, immediately turn off the air conditioning (if in use), pull your vehicle off the road and stop in a safe spot. (→P. 725)

- Always place wheel blocks under both the vehicle and the trailer wheels when parking. Apply the parking brake firmly, and put the transmission in P. Avoid parking on a slope, but if unavoidable, do so only after performing the following:

STEP 1 Apply the brakes and keep them applied.

STEP 2 Have someone place wheel blocks under both the vehicle and trailer wheels.

STEP 3 When the wheel blocks are in place, release the brakes slowly until the blocks absorb the load.

STEP 4 Apply the parking brake firmly.

STEP 5 Shift into P and turn off the engine.

- When restarting after parking on a slope:

STEP 1 With the transmission in P, start the engine. Be sure to keep the brake pedal pressed.

STEP 2 Shift into 3, 2, 1, or the R position (if reversing).

STEP 3 Release the parking brake and brake pedal, and slowly pull or back away from the wheel blocks. Stop and apply the brakes.

STEP 4 Have someone retrieve the blocks.

### Matching trailer ball height to trailer coupler height

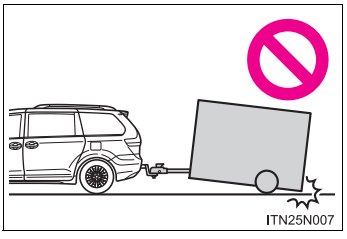


No matter which class of tow hitch applies, for a safe trailer hookup, the trailer ball setup on must be proper height for the coupler on the trailer.

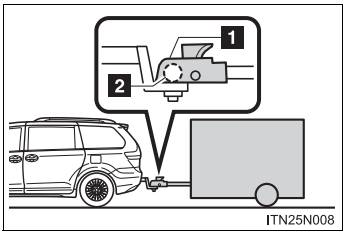


1 Coupler

2 Trailer ball

### Before towing

Check that the following conditions are met:

- The vehicle's tires are properly inflated.
- Trailer tires are inflated according to the trailer manufacturer's recommendation.
- All trailer lights work.
- All lights work each time you connect them.
- The vehicle remains level when a loaded or unloaded trailer is hitched. Do not drive if the vehicle is not level, and check for improper tongue load, overloading, worn suspension, or other possible causes.
- The trailer cargo is securely loaded.
- The rear view mirrors conform to all applicable federal, state/provincial or local regulations. If they do not, install rear view mirrors appropriate for towing purposes.

### Break-in schedule

If your vehicle is new or equipped with any new power train components (such as an engine, transmission, differential and wheel bearing), Toyota recommends that you do not tow a trailer until it has been driven for over 500 miles (800 km).
However, avoid full throttle acceleration.

### Maintenance

- If you tow a trailer, your vehicle will require more frequent maintenance due to the additional load. (See “Scheduled Maintenance Guide” or “Owner’s Manual Supplement”.)
- Retighten the fixing bolts of the towing ball and bracket after approximately 600 miles (1000 km) of trailer towing.

CAUTION

**■ Trailer towing precautions**

- Follow all the instructions described in this section. Failure to do so could cause an accident resulting in death or serious injury.
- Exceeding the towing capacity, GVWR, GCWR or GAWR can cause an accident resulting in death or serious personal injuries.

**■ To avoid accident or injury**

- Do not exceed the trailer hitch assembly weight, gross vehicle weight, gross axle weight and trailer tongue load capacities.
- Never load more weight in the back than in the front of the trailer. About 60 % of the load should be in the front half of the trailer, and the remaining 40 % in the rear.
- Do not exceed 45 mph (72 km/h) or posted towing speed limit, whichever is lower. As instability (swaying) of the towing vehicle-trailer combination increases as speed increases, exceeding 45 mph (72 km/h) may cause loss of control.
- Slow down and downshift before descending steep or long downhill grades. Do not make sudden downshifts.
- Avoid holding the brake pedal down too long or applying the brakes too frequently. This could cause the brakes to overheat and result in reduced braking efficiency.
- Do not use cruise control when you are towing.
- Do not tow the vehicle with the compact spare tire installed.

CAUTION

■ **Hitches**

- If you wish to install a trailer hitch, contact your Toyota dealer.
- Use only a hitch that conforms to the gross trailer weight requirement.
- Follow the directions supplied by the hitch manufacturer.
- Lubricate the hitch ball with a light coat of grease.
- Remove the trailer hitch whenever you are not towing a trailer. After removing the hitch, seal any mounting hole in the vehicle body to prevent entry of any substances into the vehicle.

■ **When towing a trailer**

- If the gross trailer weight exceeds 1000 lb. (453 kg), trailer brakes are required. Toyota recommends trailers with brakes that conform to all applicable federal and state/provincial regulations.
- Never tap into your vehicle's hydraulic system, as this will lower the vehicle's braking effectiveness.
- Never tow a trailer without using a safety chain securely attached to both the trailer and the vehicle. If damage occurs to the coupling unit or hitch ball, there is danger of the trailer wandering into another lane.

NOTICE

**When installing a trailer hitch**

- Use only the position recommended by your Toyota dealer. Do not install the trailer hitch on the bumper; this may cause body damage.
- Do not use axle-mounted hitches, as they can cause damage to the axle housing, wheel bearings, wheels or tires.

**Safety chain**

A safety chain must always be used between the towing vehicle and the trailer. Leave sufficient slack in the chain for turns. The chain should cross under the trailer tongue to prevent the tongue from dropping to the ground in the case that it becomes damaged or separated. For the correct safety chain installation procedure, ask your Toyota dealer.

**Do not directly splice trailer lights**

Directly splicing trailer lights may damage your vehicle's electrical system and cause a malfunction.

# Dinghy towing

**Your vehicle is not designed to be dinghy towed (with 4 wheels on the ground) behind a motor home.**

NOTICE

**To avoid serious damage to your vehicle**

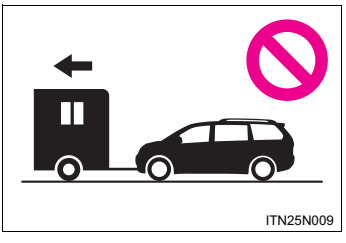


Do not tow your vehicle with four wheels on the ground.

**To prevent causing serious damage to the transaxle and Active Torque Control 4WD system (AWD models)**

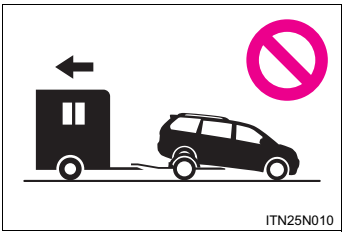


2WD models: Never tow this vehicle from the rear with the front wheels on the ground. This may cause serious damage to the transaxle.

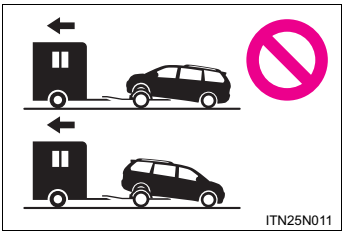


AWD models: Never tow this vehicle with any of the wheels on the ground. This may cause serious damage to the transaxle and Active Torque Control 4WD system.

# Interior features 3


**3-1. Using the air conditioning system and defogger**

Front manual air conditioning system ..... 344
Front automatic air conditioning system ..... 352
Rear manual air conditioning system ..... 362
Rear automatic air conditioning system ..... 365
Rear window and outside rear view mirror defoggers, and windshield wiper de-icer ..... 369

**3-2. Using the audio system**

Audio system type..... 371
Using the radio..... 376
Using the CD player..... 386
Playing MP3 and WMA discs..... 396
Operating an iPod®..... 405
Operating a USB memory ..... 412
Optimal use of the audio system..... 420
Using the AUX adapter .... 425
Using the steering switches..... 426

**3-3. Using the Bluetooth® audio system**

Bluetooth® audio system..... 430
Using the Bluetooth® audio system..... 433
Operating a Bluetooth® enabled portable player ..... 439
Setting up a Bluetooth® enabled portable player ..... 441
Bluetooth® audio system setup..... 446

**3-4. Using the rear audio system**

Rear seat entertainment system features ..... 447
Using the DVD player (DVD video) ..... 459
Using the DVD player (video CD)..... 468
Using the DVD player (audio CD/CD text) ..... 472
Using the DVD player (WMA/MP3 discs) ..... 473
Using the video mode ..... 475
Changing the DVD initial setting ..... 477

# Interior features 3


**3-5. Using the hands-free phone system (for cellular phone)**

Hands-free phone system (for cellular phone) features ..... 488
Using the hands-free phone system (for cellular phone) ..... 493
Making a phone call ..... 502
Setting a cellular phone ... 507
Security and system setup ..... 512
Using the phone book ..... 517

**3-6. Using the interior lights**

Interior lights list ..... 524
• Personal/interior light main switch ..... 525
• Personal/interior lights ..... 526
• Personal lights and rear ceiling lights ..... 527

**3-7. Using the storage features**

List of storage features .... 530
• Glove boxes ..... 532
• Console box ..... 534
• Overhead console ..... 537
• Cup holders ..... 538
• Bottle holders ..... 541
• Auxiliary boxes ..... 543

**3-8. Other interior features**

Sun visors ..... 548
Vanity mirrors ..... 549
Clock ..... 550
Conversation mirror ..... 551
Power outlets ..... 552
Seat heaters ..... 556
Armrests ..... 558
Rear side sunshades ..... 560
Grocery bag hooks ..... 561
Floor mat ..... 563
Luggage compartment features ..... 565
Garage door opener ..... 567
Compass ..... 573
Safety Connect ..... 578

# Front manual air conditioning system*

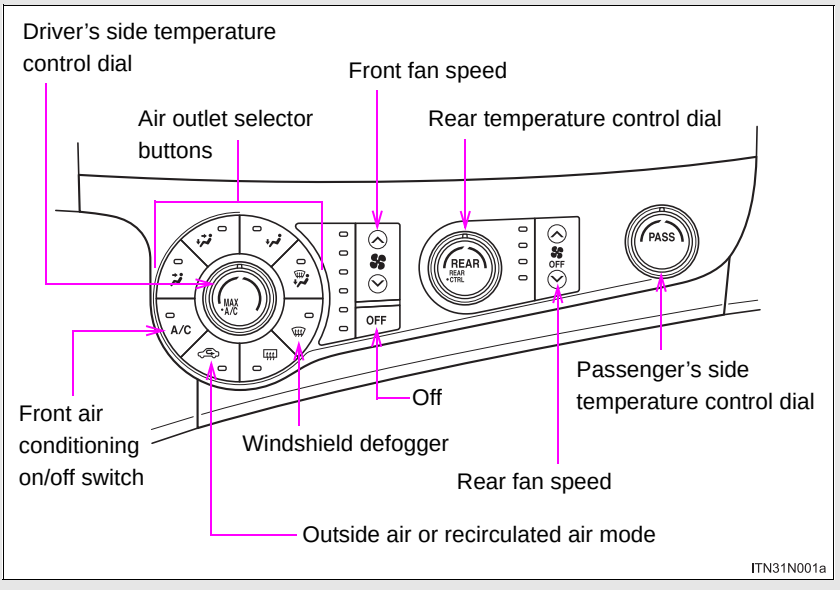


## Adjusting the settings

### ■ Basic setting

STEP 1 To turn on the air conditioning system and adjust the fan speed, press "∧" on to increase the fan speed and "∨" to decrease the fan speed.

The fan speed is shown on the control panel. (6 levels)

Press OFF to turn the fan off.

*: If equipped

STEP 2 **Driver's side temperature control dial**

Turn the temperature control dial clockwise (warm) or counterclockwise (cool).

If

is not pressed, the system will blow ambient temperature air or heated air.

For quick cooling, turn the temperature control dial to the "MAX A/C" position. The air conditioning will automatically turn on and the air circulation mode will be set to recirculated air mode.
When the dial is in the "MAX A/C" position, the air conditioning system cannot be turned off even if

is pressed.

**Front passenger's side temperature control dial**

Turn the temperature control dial clockwise (warm) or counter clockwise (cool).

STEP 3 To change the air outlets, press , , or .

Air flows as shown below according to the mode selected.

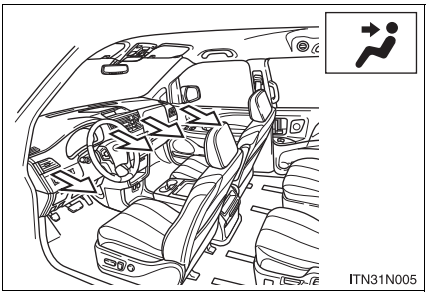


Air flows to the upper body.

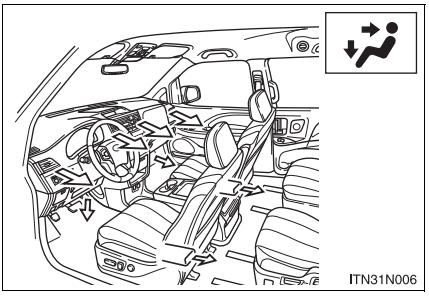


Air flows to the upper body and feet.

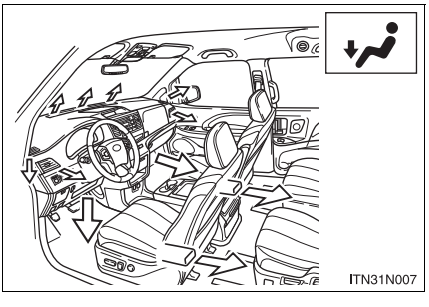


Air flows mainly to the feet.

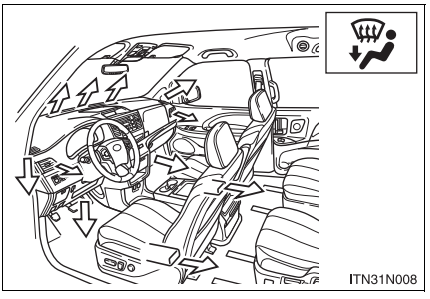


Air flows to the feet and the windshield defogger operates.

### ■ Switching between outside air and recirculated air modes

Press .

The mode switches between outside air mode (introduces air from outside the vehicle) (indicator off) and recirculated air mode (recycles air inside the vehicle) (indicator on) each time the button is pressed.

## Changing the rear setting

### ■ Adjusting the temperature setting

Turn the rear temperature control dial clockwise (increase) or counterclockwise (decrease).

When the rear temperature control dial is turned to “REAR CTRL”, the rear temperature and fan speed can be operated from the rear air conditioning control panel. (→P. 362)

### Adjusting rear fan speed

Press “∧” on to increase the fan speed and “∨” to decrease the fan speed.

The fan speed is shown on the control panel. (4 levels)

Press to turn the fan off.

## Defogging the windshield

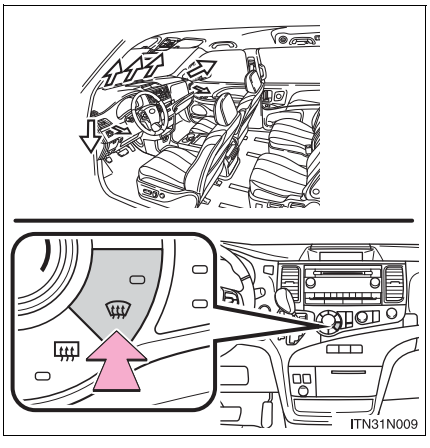


Press .

The air conditioning system operates automatically.

Recirculated air mode will automatically switch to outside air mode. It is not possible to return to recirculated air mode when the switch is on.

Pressing again will revert to the previous air outlet mode.

## Adjusting the position of and opening and closing the air outlets

### Center outlets

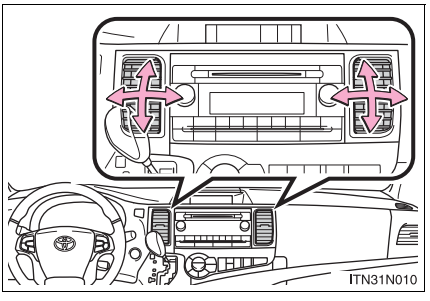


Direct air flow to the left or right, up or down.

### Right and left side outlets

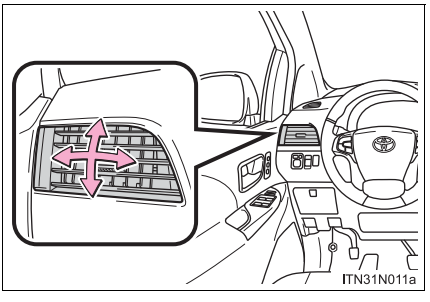


Adjusting: Direct air flow to the left or right, up or down.

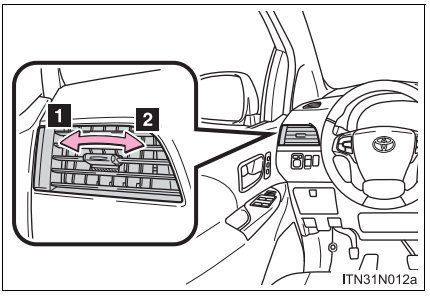


Opening and closing:

1 Close the vent.

2 Open the vent.

### Using the system in recirculated air mode

The windows will fog up more easily if the recirculated air mode is used for an extended period.

### When is selected for the air outlets used

For your driving comfort, air flowing to the feet may be warmer than air flowing to the upper body depending on the temperature setting.

### When the indicator light on A/C flashes

Press A/C and turn off the air conditioning system before turning it on once more. There may be a problem in the air conditioning system if the indicator light continues to flash. Turn the air conditioning system off and have it inspected by your Toyota dealer.

### Air conditioning odors

- During use, various odors from inside and outside the vehicle may enter into and accumulate in the air conditioning system. This may then cause odor to be emitted from the vents.
- To reduce potential odors from occurring:
  It is recommended that the air conditioning system be set to outside air mode prior to turning the vehicle off.

CAUTION

**■To prevent the windshield from fogging up**

Do not use during cool air operation in extremely humid weather. The difference between the temperature of the outside air and that of the windshield can cause the outer surface of the windshield to fog up, blocking your vision.

NOTICE

**■To prevent battery discharge**

Do not leave the air conditioning system on longer than necessary when the engine is stopped.

# Front automatic air conditioning system*

**Airflow and outlets are automatically adjusted according to the temperature setting.**

## Control panel

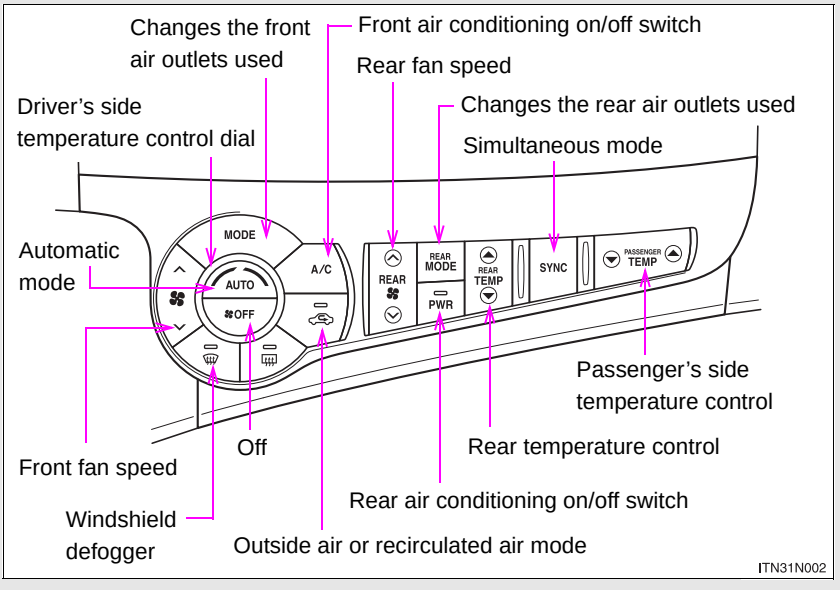


*: If equipped

### Multi-information display

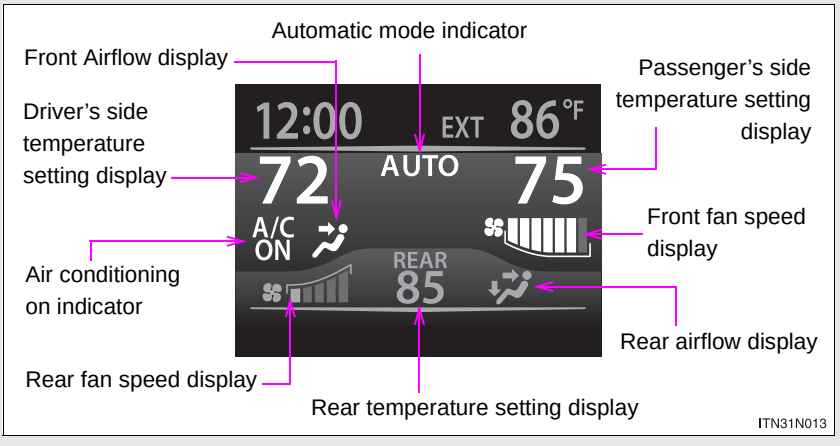


## Using the automatic mode

STEP 1 Press AUTO .

The air conditioning system will begin to operate. In outside air or recirculated air mode, air outlets, fan speed and air conditioning on/off are automatically adjusted according to the temperature setting.

"AUTO" will be displayed on the multi-information display.

STEP 2 Turn the temperature control dial clockwise (warm) or counterclockwise (cool).

The temperature for the driver and passenger seat can be set separately.

## Adjusting the settings

### Adjusting the temperature setting

Turn the temperature control dial clockwise (warm) or counter-clockwise (cool).

The air conditioning system switches between individual and simultaneous modes each time SYNC is pressed.

Individual mode: The temperature for the driver's, passenger's and rear seats can be set separately. Operating the passenger's side or rear temperature control will enter individual mode.

Simultaneous mode: Only the temperature control dial (driver's side) can be used to adjust the temperature for all seats.

### Adjusting the fan speed

Press "∧" (increase) or "∨" (decrease) on .

The fan speed is shown on the display. (7 levels)

Press OFF to turn the fan off.

## Adjusting the settings manually

### ■ Basic setting

STEP 1 To turn on the air conditioning system and adjust the fan speed, press “∧” on to increase the fan speed and “∨” to decrease the fan speed.

Press OFF to turn the fan off.

STEP 2 To adjust the temperature setting, turn the temperature control dial (driver’s side) clockwise to increase the temperature and turn the temperature control dial (driver’s side) counterclockwise to decrease the temperature.

When SYNC is pressed or the passenger’s side temperature control is pressed, the temperature for the driver and passenger seats can be adjusted separately.

STEP 3

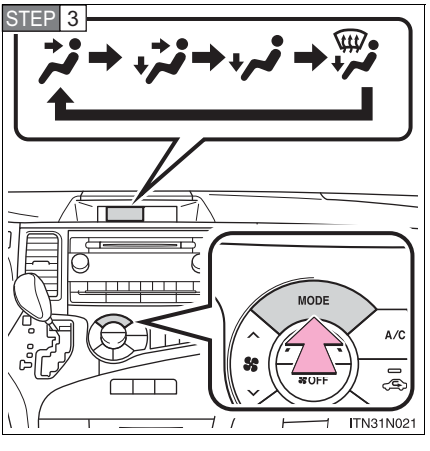


Press MODE.

The air outlets switch each time 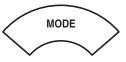

is pressed. The air flow shown on the display indicates the following.

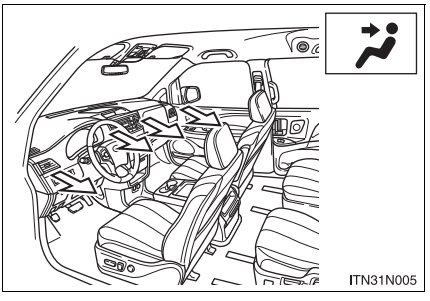


Air flows to the upper body.

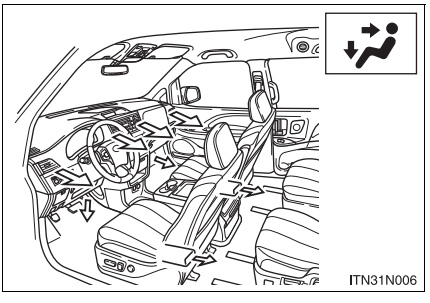


Air flows to the upper body and feet.

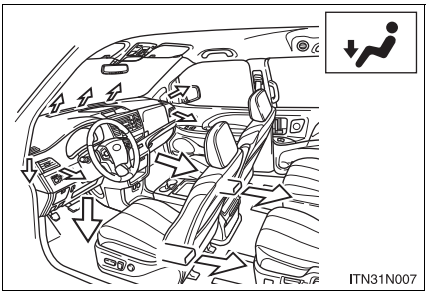


Air flows mainly to the feet.

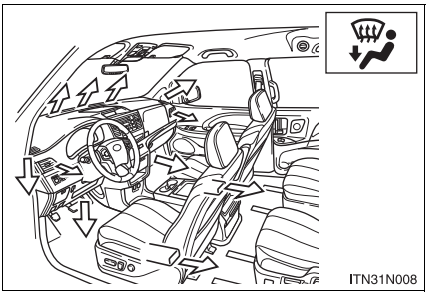


Air flows to the feet and the windshield defogger operates.

### ■ Switching between outside air and recirculated air modes

Press .

The mode switches between outside air mode (introduces air from outside the vehicle) (indicator off) and recirculated air mode (recycles air inside the vehicle) (indicator on) each time the button is pressed.

## Changing the rear setting

### ■ Adjusting the temperature setting

STEP 1 Press PWR (indicator on).

STEP 2 Press "▲" on REAR TEMP to increase the temperature and "▼" to decrease the temperature.

The air conditioning system switches between individual and simultaneous modes each time SYNC is pressed.

### ■ Adjusting the fan speed

Press “∧” on

to increase the fan speed and “∨” to decrease the fan speed.

Press

to turn the fan off.

### ■ Changing the air outlets

Press

.

The air outlets switch each time the button is pressed. (→P. 366)

## Defogging the windshield

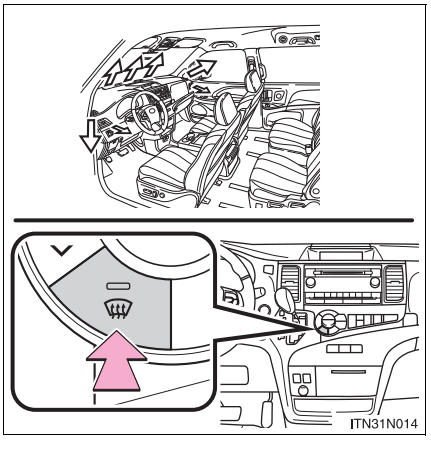


Press
.

The air conditioning system operates automatically.

Recirculated air mode will automatically switch to outside air mode. It is not possible to return to recirculated air mode when the switch is on.

Pressing again will revert to the previous air outlet mode.

## Adjusting the position of and opening and closing the air outlets

### Center outlets

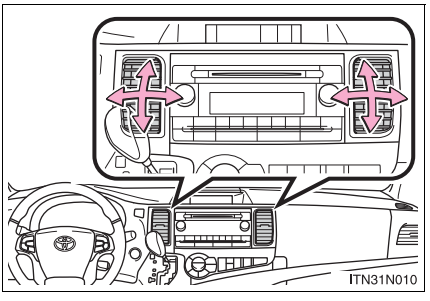


Direct air flow to the left or right, up or down.

### Right and left side outlets

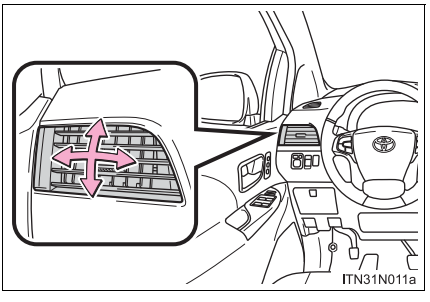


Adjusting: Direct air flow to the left or right, up or down.

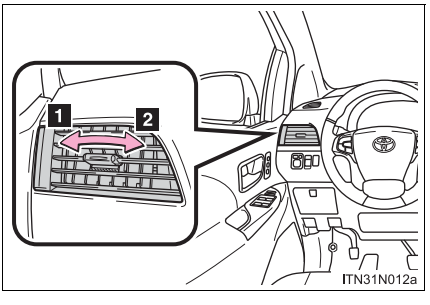


Opening and closing:

1 Close the vent.

2 Open the vent.

■ **Using the automatic mode**

Fan speed is adjusted automatically in accordance with the temperature setting and ambient conditions. As a result, the following may occur.

- Immediately after AUTO is pressed, the fan may stop for a while until warm or cool air is ready to flow.
- Cool air may flow to the area around the upper body when the heater is on.

■ **Using the system in recirculated air mode**

The windows will fog up more easily if the recirculated air mode is used

■ **Switching between outside air and recirculated air modes**

Recirculated air mode or outside air mode may be automatically switched to in accordance with the temperature setting and the inside temperature.

■ **Window defogger feature**

Recirculated air mode may automatically switch to outside air mode in situations where the windows need to be defogged.

■ **Temperature display**

The temperature display (English/U.S. Customary System and metric units) on the trip information display can be changed. (→P. 241)

■ **When is selected for the air outlets used**

For your driving comfort, air flowing to the feet may be warmer than air flowing to the upper body depending on the temperature setting.

■ **When outside temperature approaches 32°F (0°C)**

The air conditioning system may not operate even when A/C is pressed.

### When the indicator light on A/C flashes

Press A/C and turn off the air conditioning system before turning it on once more. There may be a problem in the air conditioning system if the indicator light continues to flash. Turn the air conditioning system off and have it inspected by your Toyota dealer.

### Air conditioning odors

- During use, various odors from inside and outside the vehicle may enter into and accumulate in the air conditioning system. This may then cause odor to be emitted from the vents.
- To reduce potential odors from occurring:
  - It is recommended that the air conditioning system be set to outside air mode prior to turning the vehicle off.
  - The start timing of the blower may be delayed for a short period of time immediately after the air conditioning system is started in automatic mode.



**CAUTION**

**To prevent the windshield from fogging up**

Do not use during cool air operation in extremely humid weather. The difference between the temperature of the outside air and that of the windshield can cause the outer surface of the windshield to fog up, blocking your vision.

**NOTICE**

**To prevent battery discharge**

Do not leave the air conditioning system on longer than necessary when the engine is stopped.

# Rear manual air conditioning system*

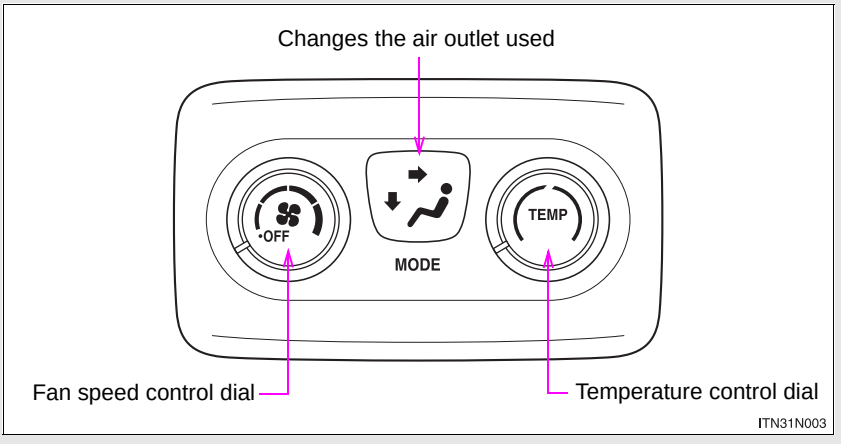


## Adjusting the settings

### Adjusting the temperature setting

Turn the temperature control dial clockwise (warm) or counter-clockwise (cool).

### Adjusting the fan speed

Turn the fan speed control dial clockwise (increase) or counter-clockwise (decrease).

### The temperature setting and fan speed will only function

If the rear temperature dial on the front air conditioning controls is in the “REAR CTRL” position.

*: If equipped

## Changing the air outlets

Press the desired

.

Air flows as shown below according to the mode selected.

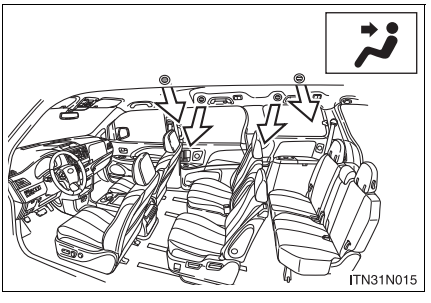


Air flows to the upper body.

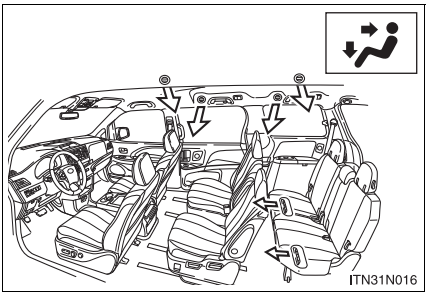


Air flows to the upper body and feet.

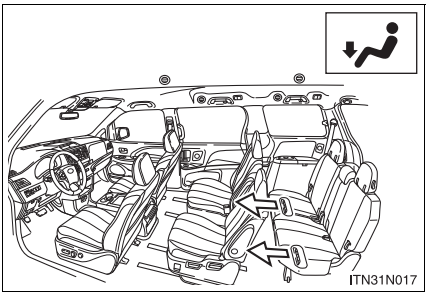


Air flows to the feet.

## Adjusting the position of and opening and closing the air outlets

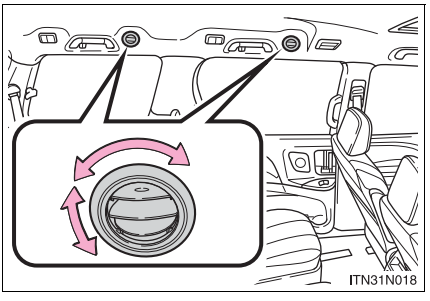


Direct air flow to the front or rear, up or down.

NOTICE

**To prevent battery discharge**

Do not leave the air conditioning system on longer than necessary when the engine is off.

**Airflow and outlets are automatically adjusted according to the temperature setting.**

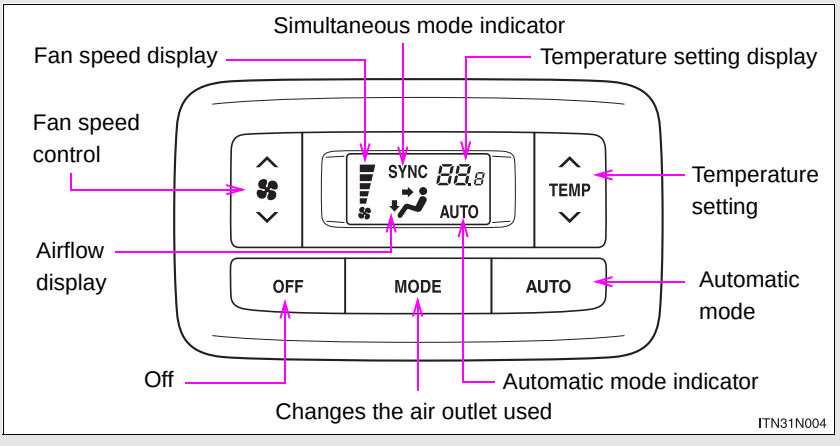


## Using the automatic mode

STEP 1 Press AUTO .

The air conditioning system begins to operate. Air outlets and fan speed are automatically adjusted according to the temperature setting.

STEP 2 Press "∧" on TEMP to increase the temperature and "∨" to decrease the temperature.

*: If equipped

## Adjusting the settings

### ■ Adjusting the temperature setting

Press "∧" on [TEMP] to increase the temperature and "∨" to decrease the temperature.

### ■ Changing the air outlets

Press the desired [MODE].

Air flows as shown below according to the mode selected.

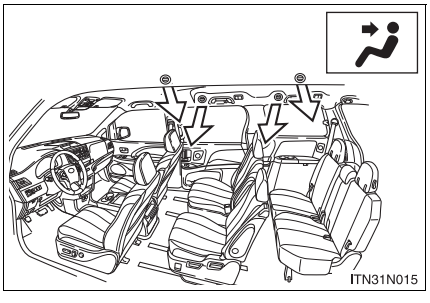


Air flows to the upper body.

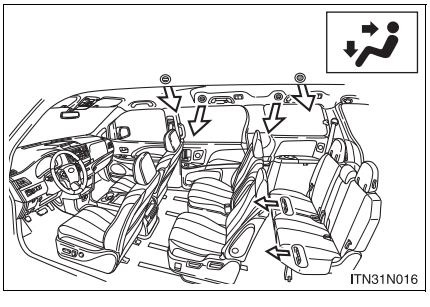


Air flows to the upper body and feet.

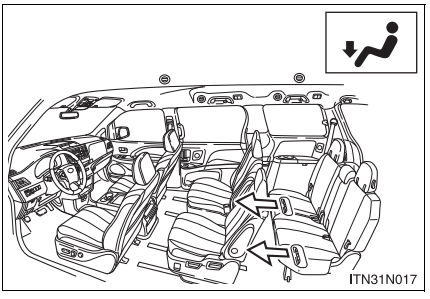


Air flows to the feet.

### ■ Adjusting the fan speed

Press “∧” on to increase the fan speed and “∨” to decrease the fan speed.

Press

to turn the fan off.

## Adjusting the position of the air outlets

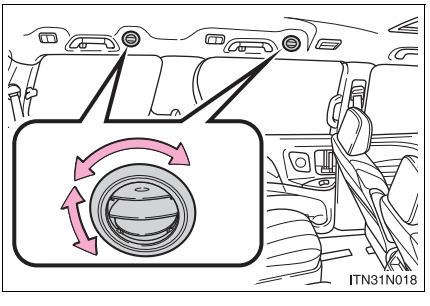


Direct air flow to the front or rear, up or down.

### Temperature display

The temperature display (English/U.S. Customary System and metric units) on the trip information display can be changed. (→P. 241)

### When the front air conditioning system is in simultaneous mode

“SYNC” is shown on the display. The rear air conditioning system controls will continue to function. (→P. 354)

NOTICE

### To prevent battery discharge

Do not leave the air conditioning system on longer than necessary when the engine is off.

**The rear window defogger is used to defog the rear window. The outside rear view mirror defoggers*1 are used to remove frost, dew or raindrops from the outside rear view mirrors. The windshield wiper de-icer*2 is used to prevent ice from building up on the windshield and wiper blades.**

### Vehicles with manual air conditioning system

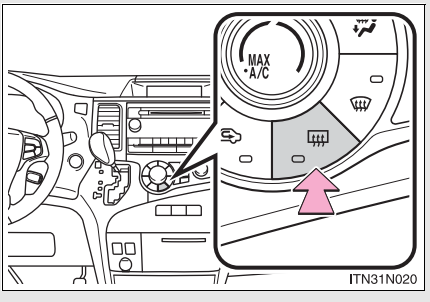


Turns the rear window and outside rear view mirror defoggers and windshield de-icer on/off.

The defoggers and de-icer will automatically turn off after approximately 15 minutes.

If outside temperature is below 32°F (0°C), this will extend by 45 minutes.

### Vehicles with automatic air conditioning system

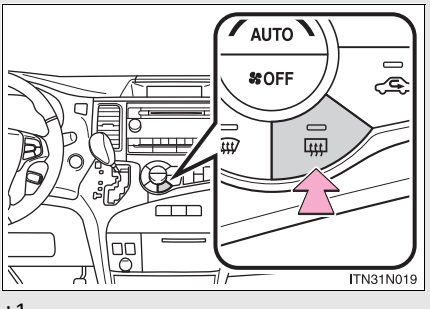


*1: Vehicles with outside rear view mirror defoggers

*2: Vehicles with windshield wiper de-icer

■ **The defogger can be operated when**

**Vehicles without a smart key system**
The engine switch is in the “ON” position.

**Vehicles with a smart key system**
The “ENGINE START STOP” switch is IGNITION ON mode.

■ **Outside rear view mirror defoggers (vehicles with outside rear view mirror defoggers)**

Turning the rear window defogger on will turn the outside rear view mirror defoggers on.

■ **The outside rear view mirror defoggers and windshield wiper de-icer (vehicles with windshield wiper de-icer)**

Turning the rear window defogger on will turn the outside rear view mirror defoggers and windshield wiper de-icer on.

CAUTION

■ **Outside rear view mirror defoggers (vehicles with outside rear view mirror defoggers)**

The surfaces of the outside rear view mirrors become hot. Do not touch them to prevent from burning yourself.

■ **When the windshield wiper de-icer is on (vehicles with windshield wiper de-icer)**

Do not touch the glass at the lower part of the windshield or to the side of the front pillars as the surfaces can become very hot and burn you.

**With navigation system**

Owners of models equipped with a navigation system should refer to the “NAVIGATION SYSTEM OWNER’S MANUAL”.

**Without navigation system**

Type A and B: CD player with AM/FM radio

Type C: CD player with changer and AM/FM radio.

**Type A**

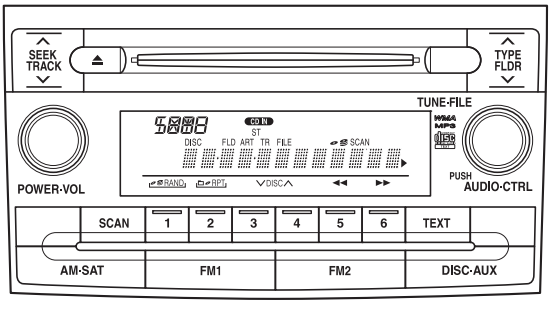


ITN32N001a

## Type B

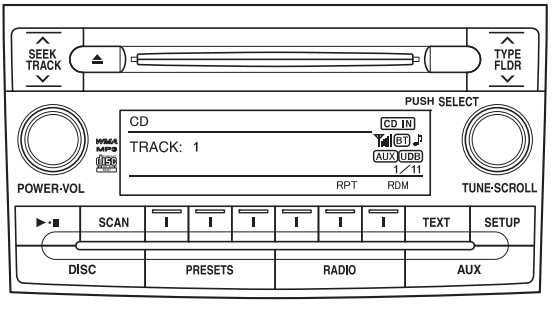


ITN32N003b

## Type C

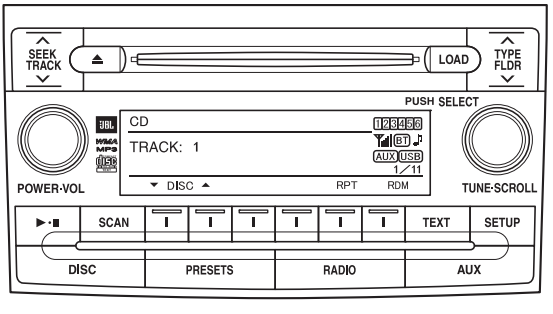


ITN32N005a

| Title | Page |
|---|---|
| Using the radio | P. 376 |
| Using the CD player | P. 386 |
| Playing back MP3 and WMA discs | P. 396 |
| Operating an iPod® | P. 405 |
| Operating a USB memory | P. 412 |
| Optimal use of the audio system | P. 420 |
| Using the AUX adapter | P. 425 |
| Using the steering switches | P. 426 |




## Language settings (type B and C)

The language used for all voice guidance, voice recognition and messages may be changed.

STEP 1 Press SETUP .

STEP 2 Press that corresponds to “MORE”.

STEP 3 Press that corresponds to “LANG”.

STEP 4 Press that corresponds to the desired language.

**For vehicles sold in the U.S.A.**
“ENG” (English) or “ESP” (Spanish)

**For vehicles sold in the Canada**
“ENG” (English) or “FRAN” (French)

### Using cellular phones

Interference may be heard through the audio system's speakers if a cellular phone is being used inside or close to the vehicle while the audio system is operating.

**CAUTION**

### For vehicles sold in the U.S.A.

- Part 15 of the FCC Rules

  FCC Warning:
  Any unauthorized changes or modifications to this equipment will void the user's authority to operate this device.

  This device complies with part 15 of the FCC Rules. Operation is subject to the following two conditions: (1) This device may not cause harmful interference, and (2) this device must accept any interference received, including interference that may cause undesired operation.

- Laser products

  - Do not take this unit apart or attempt to make any changes yourself.
    This is an intricate unit that uses a laser pickup to retrieve information from the surface of compact discs. The laser is carefully shielded so that its rays remain inside the cabinet. Therefore, never try to disassemble the player or alter any of its parts since you may be exposed to laser rays and dangerous voltages.
  - This product utilizes a laser.
    Use of controls or adjustments or performance of procedures other than those specified herein may result in hazardous radiation exposure.
    The use of optical instruments with this product will increase eye hazard.

NOTICE

■ **To prevent battery discharge**

Do not leave the audio system on longer than necessary with the engine off.

■ **To avoid damaging the audio system**

Take care not to spill drinks or other fluids over the audio system.

# Using the radio

## Type A

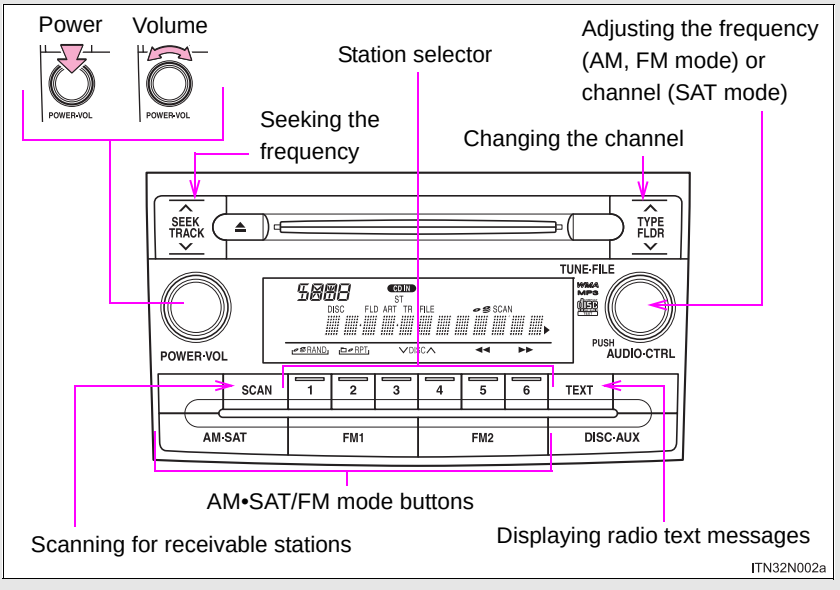

## Type B and C

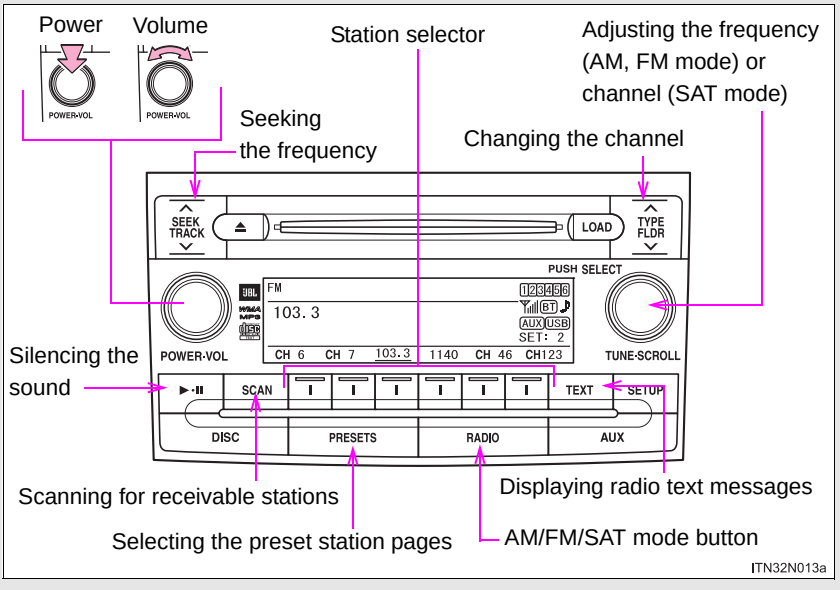
Power
Volume
POWER·VOL
POWER·VOL
Station selector
Adjusting the frequency (AM, FM mode) or channel (SAT mode)
Seeking the frequency
Changing the channel
SEEK TRACK
LOAD
TYPE FLDR
PUSH SELECT
FM
103. 3
1 2 3 4 5 6
BT
AUX USB
SET: 2
CH 6 CH 7 103.3 1140 CH 46 CH123
POWER·VOL
TUNE·SCROLL
Silencing the sound
SCAN
TEXT
SETUP
DISC
PRESETS
RADIO
AUX
Scanning for receivable stations
Displaying radio text messages
Selecting the preset station pages
AM/FM/SAT mode button
ITN32N013a

## Setting station presets (excluding XM® Satellite Radio)

STEP 1 Search for desired stations by turning TUNE·FILE PUSH AUDIO·CTRL or TUNE·SCROLL or pressing "∧" or "∨" on SEEK TRACK .

STEP 2 Press and hold the button (from 1 to 6 or one of I) until you hear a beep.

Type B and C:

Each time PRESETS is pressed, station pages are changed. There are 6 sets of 6 presets. There is a total of 36 presets.

## Scanning radio stations (excluding XM® Satellite Radio)

### ■ Scanning the preset radio stations

STEP 1 Press and hold SCAN until you hear a beep.

Preset stations will be played for 5 seconds each.

STEP 2 When the desired station is reached, press SCAN once again.

### ■ Scanning all radio stations within range

STEP 1 Press SCAN .

All stations with reception will be played for 5 seconds each.

STEP 2 When the desired station is reached, press SCAN once again.

### ■ Displaying radio text messages (for type B and C, FM mode only)

When a new radio text message is received, “MSG” is shown on the display. To display the message, press TEXT .

If the text continues past the end of the display, “▶” is displayed. Press and hold TEXT until you hear a beep.

Text messages are not displayed while driving.

## XM® Satellite Radio (if equipped)

### ■ Receiving XM® Satellite Radio

STEP 1 Press AM-SAT or RADIO .

The display changes as follows each time the button is pressed.

**Type A**

AM → SAT1 → SAT2 → SAT3

**Type B and C**

AM → FM → SAT

STEP 2 Turn TUNE-FILE PUSH AUDIO-CTRL or TUNE-SCROLL to select a desired channel in all the categories or press “∧” or “∨” on SEEK TRACK to select the desired channel in the current category.

## Setting XM® Satellite Radio channel presets

Select the desired channel. Press and hold a button (from 1 to 6 or one of I) until you hear a beep.

Type B and C:

Each time PRESETS is pressed, station pages are changed. There is a total of 6 sets of 6 presets.

## Changing the channel category

Press "∧" or "∨" on TYPE FLDR .

## Scanning XM® Satellite Radio channels

● Scanning channels in the current category

STEP 1 Press SCAN .

STEP 2 When the desired channel is reached, press the button again.

● Scanning preset channels

STEP 1 Press and hold SCAN until you hear a beep.

STEP 2 When the desired channel is reached, press the button again.

### Displaying text information

Press TEXT .

Each time TEXT is pressed, the display changes in the following order:

**Type A**

Channel name → Title (song/program title) → Name (artist name/ feature) → Channel number.

**Type B and C**

Title (song/ program title) → Title (song/program title)/Name (artist name/ feature).

## Silencing the sound (type B and C)

Press ▶·■ .

Press the button again to turn the system back on.

■ **When the battery is disconnected (type A only)**

All preset stations are erased.

■ **Radio antenna type**

- Detachable antenna (type A and B)
  To remove a detachable antenna, carefully turn it counterclockwise.
- Wire antenna (type C)
  The radio antenna is mounted inside the rear quarter window.

■ **Reception sensitivity**

- Type B and C — Cargo loaded on the roof luggage carrier, especially metal objects, may adversely affect the reception of XM® Satellite Radio.
- Maintaining perfect radio reception at all times is difficult due to the continually changing position of the antenna, differences in signal strength and surrounding objects, such as trains, transmitters, etc.
- Type C — The radio antenna is mounted inside the rear quarter window. To maintain clear radio reception, do not attach metallic window tinting or other metallic objects to the antenna wire mounted inside the rear quarter window.

## ■ Receiving XM® Satellite Radio

An XM® Satellite Radio is a tuner designed exclusively to receive broadcasts provided under a separate subscription. Availability is limited to the 48 contiguous states and 10 Canadian provinces.

- XM® subscriptions
  For detailed information about XM® Satellite Radio or to subscribe:
  U.S.A.–
  Visit on the web at www.xmradio.com or call 1-800-967-2346.
  Canada–
  Visit on the web at www.xmradio.ca or call 1-877-438-9677.
- Radio ID
  You will need the radio ID when activating XM® service or reporting a problem. Select “CH000” using 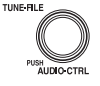
  
  or
  
  , and the receiver’s 8-character ID number will appear.
- Satellite tuner
  The tuner supports only Audio Services (Music and Talk) and the accompanying Text Information of XM® Satellite Radio.

### ■ If the satellite radio does not operate normally

If a problem occurs with the XM® tuner, a message will appear on the display. Refer to the table below to identify the problem, and take the suggested corrective action.

| | |
|---|---|
| ANTENNA or CHECK ANTENNA | The XM® antenna is not connected. Check whether the XM® antenna cable is attached securely. |
| | There is a short-circuit in the antenna or the surrounding antenna cable. See a Toyota certified dealer. |
| UPDATING or CHANNEL NOT AUTHORIZED | You have not subscribed to XM® Satellite Radio. The radio is being updated with the latest encryption code. Contact XM® Satellite Radio for subscription information. When a contract is canceled, you can choose “CH000” and all free-to-air channels. |
| | The premium channel you selected is not authorized. Wait for about 2 seconds until the radio returns to the previous channel or “CH001”. If it does not change automatically, select another channel. If you want to listen to the premium channel, contact XM® Satellite Radio. |
| NO SIGNAL | The XM® signal is too weak at the current location. Wait until your vehicle reaches a location with a stronger signal. |
| LOADING | The unit is acquiring audio or program information. Wait until the unit has received the information. |
| OFF AIR or CHANNEL OFF AIR | The channel you selected is not broadcasting any programming. Select another channel. |

| | |
|---|---|
| ----- | There is no song/program title or artist name/feature associated with the channel at that time. No action needed. |
| ---<br>or<br>CHANNEL NOT AVAILABLE | The channel you selected is no longer available. Wait for about 2 seconds until the radio returns to the previous channel or “CH001”. If it does not change automatically, select another channel. |

Contact the XM® Listener Care Center at 1-800-967-2346 (U.S.A.) or 1-877-438-9677 (Canada).

### ■ Certifications for the radio tuner

This equipment has been tested and found to comply with the limits for a class B digital device, pursuant to Part 15 of the FCC Rules. These limits are designed to provide reasonable protection against harmful interference in a residential installation. This equipment generates, uses and can radiate radio frequency energy and, if not installed and used in accordance with the instructions, may cause harmful interference to radio communications. However, there is no guarantee that interference will not occur in a particular installation.

If this equipment does cause harmful interference to radio or television reception, which can be determined by turning the equipment off and on, the user is encouraged to try to correct the interference by trying one or more of the following:

- Reorienting or relocating the receiving antenna.
- Increasing the separation between the equipment and receiver.
- Connecting the equipment into an outlet on a circuit different from that to which the receiver is connected.
- Consulting the dealer or an experienced radio/TV technician for help.

**Type A**

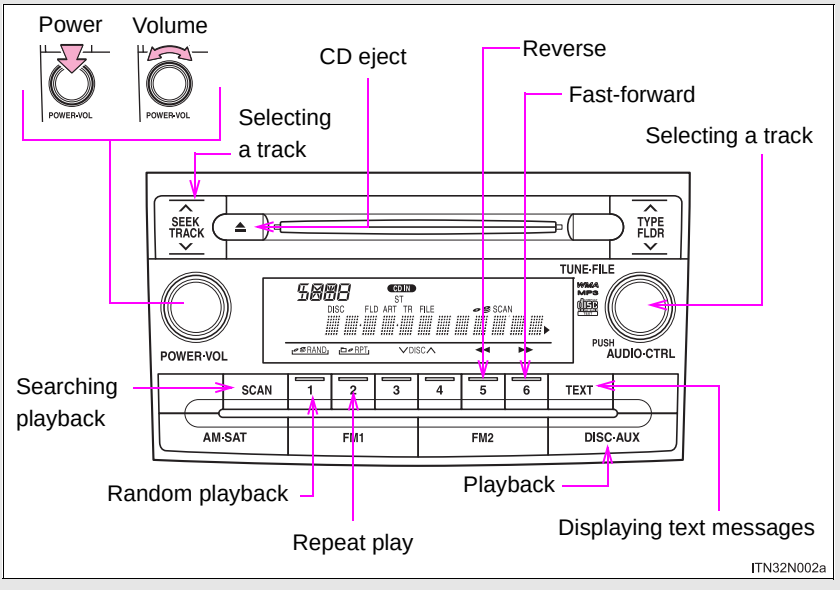
Power
Volume
POWER·VOL
POWER·VOL
CD eject
Reverse
Fast-forward
Selecting a track
Selecting a track
SEEK TRACK
TYPE FLDR
TUNE·FILE
POWER·VOL
PUSH
AUDIO·CTRL
Searching playback
SCAN
1
2
3
4
5
6
TEXT
AM·SAT
FM1
FM2
DISC·AUX
Random playback
Playback
Repeat play
Displaying text messages
ITN32N002a

**Type B and C**

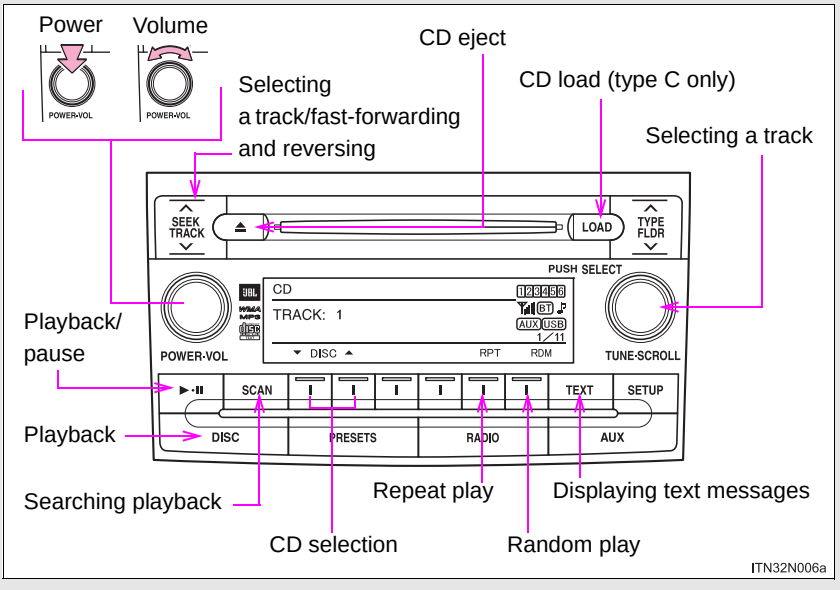


## Loading CDs

### ■ Loading a CD (type A and B)

Insert a CD.

### ■ Loading a CD (type C)

STEP 1 Press (LOAD).

STEP 2 Insert a CD when the indicator on the slot turns from amber to green.

### ■ Loading multiple CDs (type C only)

STEP 1 Press and hold LOAD until you hear a beep.

STEP 2 Insert a CD when the indicator on the slot turns from amber to green.

The indicator on the slot turns to amber when the CD is inserted.

STEP 3 Insert the next CD when the indicator on the slot turns from amber to green again.

Repeat the procedure for the remaining CDs.

To cancel the operation, press LOAD. If you do not insert a CD within 15 seconds, loading will be canceled automatically.

## Ejecting CDs

### ■ Ejecting a CD (type A and B)

Press ⏏ and remove the CD.

### ■ Ejecting a CD (type C)

STEP 1 To select the CD to be ejected, press 1 that corresponds to “DISC ▲” or “▼ DISC”.

The selected CD number is shown on the display.

STEP 2 Press ⏏ and remove the CD.

### ■ Ejecting all CDs (type C only)

Press and hold ⏏ until you hear a beep, then remove the CDs.

## Selecting a track

Turn TUNE-FILE PUSH AUDIO-CTRL or TUNE-SCROLL or press “∧” or “∨” on SEEK TRACK to select the desired track.

## Fast forwarding and rewinding tracks

**Type A**

Press 5 or 6 .

**Type B and C**

Press and hold “∧” or “∨” on SEEK TRACK .

## Scanning tracks

STEP 1 Press SCAN .

The first 10 seconds of each track will be played.

To cancel, press SCAN again.

STEP 2 Press SCAN again when the desired track is reached.

## Selecting a CD (type C only)

### ■ Selecting a CD to play

Press [I] that corresponds to “DISC ▲” or “▼ DISC”.

### ■ Scanning loaded CDs

STEP 1 Press and hold [SCAN] until you hear a beep.

The first 10 seconds of the first track on each CD will be played.

To cancel, press [SCAN] again.

STEP 2 Press [SCAN] again when the desired CD is reached.

## Playing and pausing tracks (type B and C)

Press [▶·■] .

## Random playback

### ■ Current CD

Press [1] or [I] that corresponds to “RDM”.

Songs are played in random order.

To cancel, press the button again.

### ■ All CDs (type C only)

Press [I] that corresponds to “RDM” twice.

Tracks on all loaded CDs are played in random order.

To cancel, press the button again.

## Repeat play

### Repeating a track

Press 2 or I that corresponds to “RPT”.

To cancel, press the button again.

### Repeating all of the tracks on a CD (type C only)

Press I that corresponds to “RPT” twice.

To cancel, press the button again.

## Switching the display

Press TEXT .

Each time TEXT is pressed, the display changes in the following order:

**Type A**

Track no./Elapsed time → CD title → Track name.

**Type B and C**

Track title → Track name/Artist name → Track name/Elapsed time.

### Display (type A only)

Up to 12 characters can be displayed at a time.

If there are 13 characters or more, pressing and holding TEXT for 1 second or more will display the remaining characters.
A maximum of 24 characters can be displayed.

If TEXT is pressed for 1 second or more again or has not been pressed for 6 seconds or more, the display will return to the first 12 characters.

Depending on the contents recorded, the characters may not be displayed properly or may not be displayed at all.

### Error messages

“CD CHECK”: This indicates a problem either with the CD or inside the player. The CD may be dirty, damaged or inserted up-side down.

“WAIT” or “PLEASE WAIT”: Operation has stopped due to a high temperature inside the player. Wait for a while and then press DISC·AUX or DISC . Contact your Toyota dealer if the CD still cannot be played back.

### Discs that can be used

Discs with the marks shown below can be used.
Playback may not be possible depending on recording format or disc features, or due to scratches, dirt or deterioration.

CDs with copy-protect features may not play correctly.

### CD player protection feature

To protect the internal components, playback is automatically stopped when a problem is detected.

### If CDs are left inside the CD player or in the ejected position for extended periods

CDs may be damaged and may not play properly.

### Lens cleaners

Do not use lens cleaners. Doing so may damage the CD player.

NOTICE

**CDs and adapters that cannot be used**

Do not use the following types of CDs, 3 in. (8 cm) CD adapters or Dual Disc.

Doing so may damage the player and/or the CD insert/eject function.

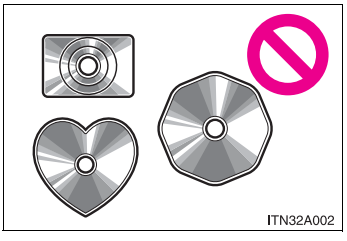


- CDs that have a diameter that is not 4.7 in. (12 cm).

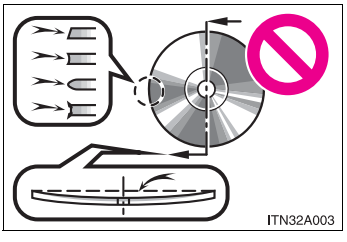


- Low-quality and deformed CDs.

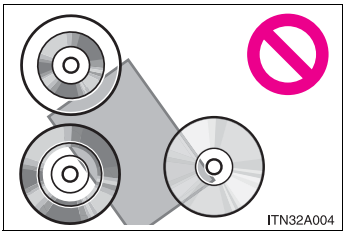


- CDs with a transparent or translucent recording area.

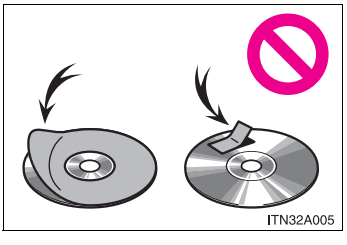


- CDs that have tape, stickers or CD-R labels attached to them, or that have the label peeled off.

NOTICE

**Player precautions**

Failure to follow the precautions below may result in damage to the CDs or the player itself.

- Do not insert anything other than CDs into the CD slot.
- Do not apply oil to the CD player.
- Store CDs away from direct sunlight.
- Never try to disassemble any part of the player.

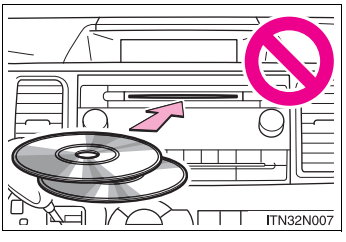


- Do not insert more than one CD at a time.

# Playing MP3 and WMA discs

## Type A

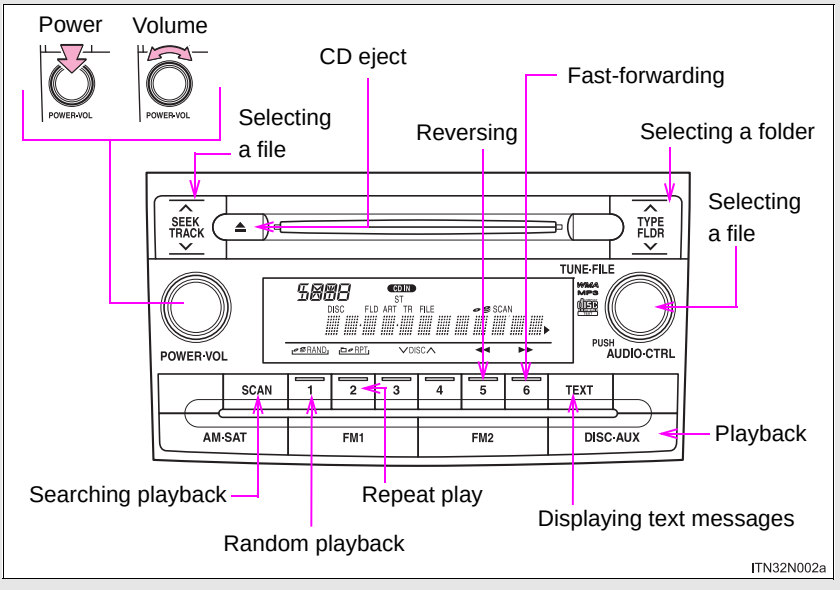

### Type B and C

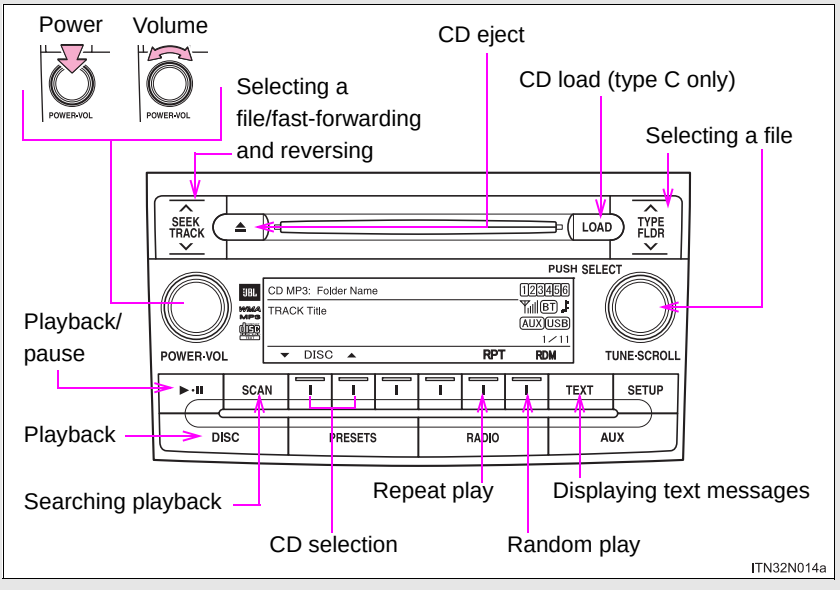


## Loading and ejecting MP3 and WMA discs

→P. 386

## Selecting MP3 and WMA discs (type C only)

→P. 386

## Selecting and scanning a folder

### ■ Selecting folders one at a time

Press “∧” or “∨” on TYPE FLDR to select the desired folder.

### ■ Scanning the first file of all the folders

STEP 1 Press and hold SCAN until you hear a beep.

The first 10 seconds of the first file in each folder will be played.

STEP 2 When the desired folder is reached, press SCAN again.

### ■ Returning to the first folder

Press and hold “∨” on TYPE FLDR until you hear a beep.

## Selecting and scanning files

### ■ Selecting one file at a time

Turn the TUNE·FILE PUSH AUDIO·CTRL or TUNE·SCROLL dial or press “∧” or “∨” on SEEK TRACK to select the desired file.

### ■ Selecting the desired file by cueing the files in the folder

STEP 1 Press SCAN .

STEP 2 When the desired file is reached, press SCAN once again.

## Fast forwarding and reversing files

**Type A**

Press 5 or 6.

**Type B and C**

Press and hold "∧" or "∨" on SEEK TRACK.

## Playing and pausing files (type B and C)

Press ▶·■.

## Random playback

### ■ Playing files from a particular folder in random order

Press 1 or I that corresponds to "RDM".

To cancel, press the button again.

### ■ Playing all of the files on a disc in random order

Press and hold 1 or I that corresponds to "RDM" until you hear a beep.

To cancel, press the button again.

## Repeat play

### Repeating a file

Press 2 or 1 that corresponds to “RPT”.

To cancel, press the button again.

### Repeating all of the files in a folder

**Type A**

Press and hold 2 until you hear a beep.

To cancel, press the button again.

**Type B and C**

Press 1 that corresponds to “RPT” twice.

To cancel, press the button again.

### Repeating all of the files in a disc (type C only)

Press 1 that corresponds to “RPT” three times.

To cancel, press the button again.

## Switching the display

Press TEXT .

Each time TEXT is pressed, the display changes in the following order:

**Type A**

Folder no./File no./Elapsed time → Folder name → File name → Album title (MP3 only) → Track title → Artist name.

**Type B and C**

Track title → Track title/Artist name → Track title/Album name → Track title/Elapsed time.

■ **Display (type A only)**

→P. 392

■ **Error messages**

“CD CHECK”: This indicates a problem either with the CD or inside the player. The CD may be dirty, damaged or inserted up-side down.

“WAIT” or “PLEASE WAIT”: Operation has stopped due to a high temperature inside the player. Wait for a while and then press DISC·AUX or DISC. Contact your Toyota dealer if the CD still cannot be played back.

■ **Discs that can be used**

→P. 393

■ **CD player protection feature**

→P. 393

■ **If CDs are left inside the CD player or in the ejected position for extended periods**

→P. 393

### Lens cleaners

→P. 393

### MP3 and WMA files

MP3 (MPEG Audio LAYER3) is a standard audio compression format.

Files can be compressed to approximately 1/10 of their original size by using MP3 compression.

WMA (Windows Media® Audio) is a Microsoft audio compression format.

This format compresses audio data to a size smaller than that of the MP3 format.

There is a limit to the MP3 and WMA file standards and to the media/formats recorded by them that can be used.

● MP3 file compatibility

- Compatible standards
  MP3 (MPEG1 LAYER3, MPEG2 LSF LAYER3)
- Compatible sampling frequencies
  MPEG1 LAYER3: 32, 44.1, 48 (kHz)
  MPEG2 LSF LAYER3: 16, 22.05, 24 (kHz)
- Compatible bit rates
  MPEG1 LAYER3: 64, 80, 96, 112, 128, 160, 192, 224, 256, 320 (kbps)
- MPEG2 LSF LAYER3: 64, 80, 96, 112, 128, 144, 160 (kbps)
  * Compatible with VBR
- Compatible channel modes: stereo, joint stereo, dual channel and monaural

● WMA file compatibility

- Compatible standards
  WMA Ver. 7, 8, 9
- Compatible sampling frequencies
  32, 44.1, 48 (kHz)
- Compatible bit rates
  Ver. 7, 8: CBR 48, 64, 80, 96, 128, 160, 192 (kbps)
  Ver. 9: CBR 48, 64, 80, 96, 128, 160, 192, 256, 320 (kbps)
  * Only compatible with 2-channel playback

● Compatible media

Media that can be used for MP3 and WMA playback are CD-Rs and CD-RWs.

Playback in some instances may not be possible, depending on the status of the CD-R or CD-RW. Playback may not be possible or the audio may jump if the disc is scratched or marked with fingerprints.

● Compatible disc formats

The following disc formats can be used.

- Disc formats: CD-ROM Mode 1 and Mode 2
  CD-ROM XA Mode 2, Form 1 and Form 2
- File formats: ISO9660 Level 1, Level 2, (Romeo, Joliet)
  MP3 and WMA files written in any format other than those listed above may not play correctly, and their file names and folder names may not be displayed correctly.

Items related to standards and limitations are as follows.

- Maximum directory hierarchy: 8 levels
- Maximum length of folder names/file names: 32 characters
- Maximum number of folders: 192 (including the root)
- Maximum number of files per disc: 255

● File names

The only files that can be recognized as MP3/WMA and played are those with the extension .mp3 or .wma.

● Multi-sessions

As the audio system is compatible with multi-sessions, it is possible to play discs that contain MP3 and WMA files. However, only the first session can be played.

● ID3 and WMA tags

ID3 tags can be added to MP3 files, making it possible to record the track title and artist name, etc.

The system is compatible with ID3 Ver. 1.0, 1.1, and Ver. 2.2, 2.3 ID3 tags. (The number of characters is based on ID3 Ver. 1.0 and 1.1.)

WMA tags can be added to WMA files, making it possible to record the track title and artist name in the same way as with ID3 tags.

● MP3 and WMA playback

When a disc containing MP3 or WMA files is inserted, all files on the disc are first checked. Once the file check is finished, the first MP3 or WMA file is played. To make the file check finish more quickly, we recommend you do not write in any files other than MP3 or WMA files or create any unnecessary folders.

If the discs contain a mixture of music data and MP3 or WMA format data, only music data can be played.

● Extensions

If the file extensions .mp3 and .wma are used for files other than MP3 and WMA files, they will be mistakenly recognized and played as MP3 and WMA files. This may result in large amounts of interference and damage to the speakers.

● Playback

- To play MP3 file with steady sound quality, we recommend a fixed bit rate of 128 kbps and a sampling frequency of 44.1 kHz.
- CD-R or CD-RW playback may not be possible in some instances, depending on the characteristics of the disc.
- There is a wide variety of freeware and other encoding software for MP3 and WMA files on the market, and depending on the status of the encoding and the file format, poor sound quality or noise at the start of playback may result. In some cases, playback may not be possible at all.
- When files other than MP3 or WMA files are recorded on a disc, it may take more time to recognize the disc and in some cases, playback may not be possible at all.
- Microsoft, Windows, and Windows Media are the registered trademarks of Microsoft Corporation in the U.S. and other countries.

NOTICE

■ **CDs and adapters that cannot be used (→P. 394)**

■ **Player precautions (→P. 395)**

# Operating an iPod®*

**Connecting an iPod® enables you to enjoy music from the vehicle speakers.**

## ■ Connecting an iPod®

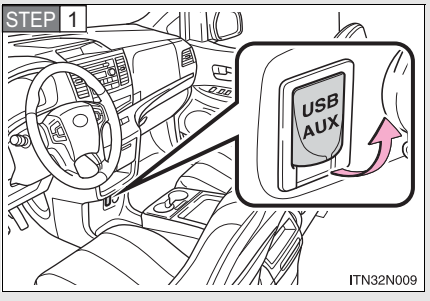


Open the cover and connect an iPod® using an iPod® cable.

STEP 2 Press

.

## ■ Control panel

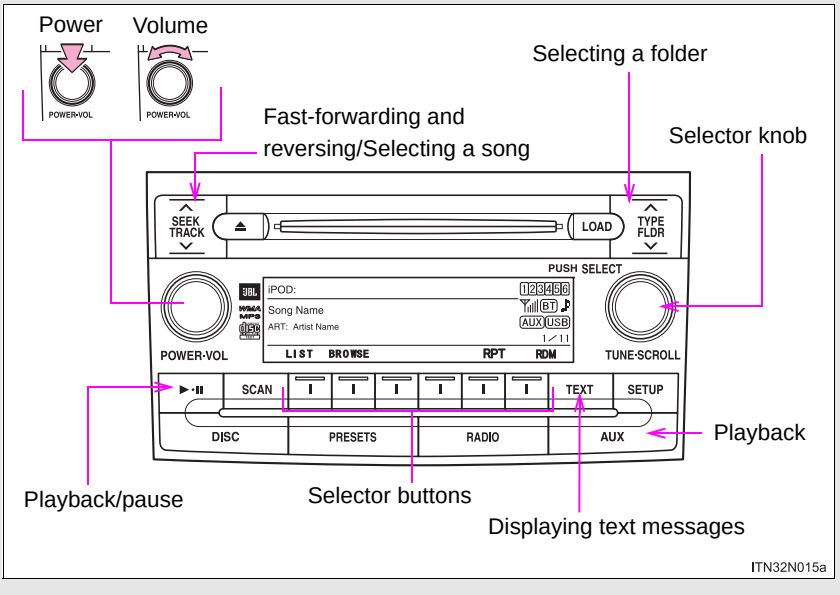


*: If equipped

## Selecting a play mode

STEP 1 Press that corresponds to “BROWSE” to select iPod® menu mode.

STEP 2 Press that corresponds to the desired play mode.

### ■ Play mode list

| Play mode | First selection | Second selection | Third selection | Fourth selection |
|---|---|---|---|---|
| PLIST | Playlists select | Songs select | - | - |
| ARTIST | Artists select | Albums select | Songs select | - |
| ALBUM | Albums select | Songs select | - | - |
| GENRE | Genre select | Artists select | Albums select | Songs select |
| SONGS | Songs select | - | - | - |
| PODCST | Albums select | Songs select | Albums select | Songs select |
| COMPSR | Composers select | Albums select | Songs select | - |
| BOOK | Songs select | - | - | - |

Depending on the model, the name of your iPod® may be displayed at the top of list.

### ■ Selecting a list

STEP 1 Turn TUNE·SCROLL to display the first selection list.

STEP 2 Press TUNE·SCROLL to select the desired item.

Pressing that corresponds to “MORE” changes to the second selection list.

STEP 3 Repeat the same procedure to select the desired song name.

To return to the previous selection list, press that corresponds to “ ”.

## Selecting songs from a song list

STEP 1 Press that corresponds to “LIST”.

The current playlist is displayed.

STEP 2 Turning TUNE·SCROLL to select the desired song.

Press TUNE·SCROLL returns the screen from list display to the previous screen.

## Selecting songs

Turn TUNE·SCROLL or press “∧” or “∨” on SEEK TRACK to select the desired song.

## Playing and pausing songs

Press the ▶·■ .

## Fast-forwarding and rewinding songs

Press and hold “∧” or “∨” on SEEK TRACK .

## Shuffle playback

### ■ Playing songs from one playlist or album in random order

Press I that corresponds to “RDM”.

To cancel, press the button twice.

### ■ Playing songs from all the playlists or albums in random order

Press I that corresponds to “RDM” twice.

To cancel, press the button again.

## Repeat play

Press I that corresponds to “RPT”.

To cancel, press the button again.

Even when the repeat play option has not been selected, playback will automatically continue from the first song in the current play list once the last song has ended.

## Switching the display

Press TEXT .

Each time the button is pressed, the display changes in the following order: Track title → Track title/Artist name → Track title/Album name → Track title/Elapsed

---

### ■ About iPod®

- “Made for iPod” means that an electronic accessory has been designed to connect specifically to iPod® and has been certified by the developer to meet Apple performance standards.
- Apple is not responsible for the operation of this device or its compliance with safety and regulatory standards.
- iPod® is a trademark of Apple Inc., registered in the U.S. and other countries.

### ■ iPod® functions

- When an iPod® is connected and the audio source is changed to iPod® mode, the iPod® will resume play from the same point in which it was last used.
- Depending on the iPod® that is connected to the system, certain functions may not be available. Disconnecting the device and reconnecting it once again may resolve some malfunctions.

### ■ iPod® problems

To resolve most problems encountered when using your iPod®, disconnect your iPod® from the vehicle iPod® connection and reset it.
For instructions on how to reset your iPod®, refer to your iPod® Owner's Manual.

### ■ Error messages

"iPod ERROR": This indicates a problem in the iPod®, inside the USB ECU in the vehicle or the connection between them.

"NO SONGS": This indicates that there is no music data in the iPod®.

"UPDATE YOUR iPod": This indicates that the version of the iPod® is not compatible.

### ■ Compatible models

- iPod® 5th generation Ver. 1.2 or later
- iPod nano® 3rd generation Ver. 1.0 or later
- iPod nano® 2nd generation Ver. 1.1.2 or later
- iPod nano® Ver. 1.3 or later
- iPod touch® Ver. 1.1 or later
- iPod classic® Ver. 1.0 or later

iPhone™, iPod® mini, iPod shuffle®, iPod® photo and 4th generation and earlier models of iPod® are not compatible with this system.

Items related to standards and limitations are as follows:

- Maximum number of lists in device: 9999
- Maximum number of songs in device: 65535
- Maximum number of songs per list: 65535

CAUTION

**While driving**

Do not connect iPod® or operate the controls on the iPod®.

NOTICE

**To prevent damage to iPod®**

- Do not leave iPod® in the vehicle. The temperature inside the vehicle may become high, resulting in damage to the player.
- Do not push down on or apply unnecessary pressure to the iPod® while it is connected as this may damage the iPod® or its terminal.
- Do not insert foreign objects into the port as this may damage the iPod® or its terminal.

# Operating a USB memory*

**Connecting a USB memory enables you to enjoy music from the vehicle speakers.**

## ■ Connecting a USB memory

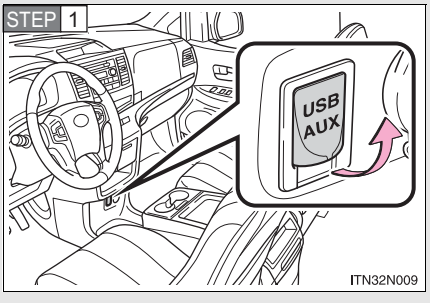


Open the cover and connect a USB memory.

STEP 2 Press

.

## ■ Control panel

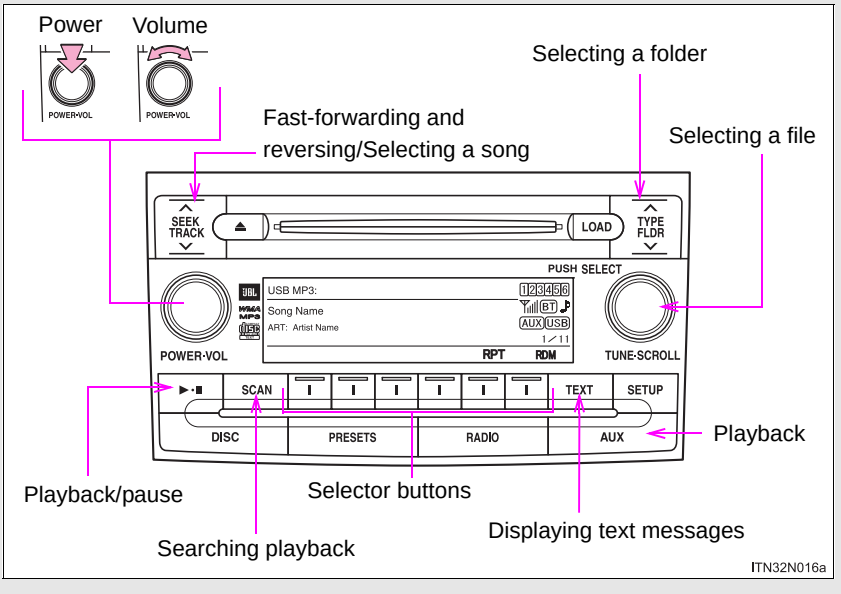


*: If equipped

## Selecting and scanning a folder

### ■ Selecting a folder

Press “∧” or “∨” on TYPE FLDR to select the desired folder.

### ■ Returning to the first file of the first folder

Press and hold “∨” on TYPE FLDR until you hear a beep.

### ■ Scanning the first file of all the folders

STEP 1 Press and hold SCAN until you hear a beep.

The first 10 seconds of the first file in each folder will be played.

STEP 2 When the desired folder is reached, press SCAN again.

## Selecting and scanning files

### ■ Selecting a file

Turn TUNE·SCROLL or press “∧” or “∨” on SEEK TRACK to select the desired file.

### ■ Scanning the files in a folder

STEP 1 Press SCAN .

The first 10 seconds of each file will be played.

To cancel, press SCAN again.

STEP 2 When the desired file is reached, press SCAN again.

## Playing and pausing files

Press ▶·■ .

## Fast-forwarding and rewinding files

Press and hold “∧” or “∨” on SEEK TRACK .

## Random playback

### ■ Playing files from a folder in random order

Press that corresponds to “RDM”.

To cancel, press the button twice.

### ■ Playing all the files from a USB memory in random order

Press that corresponds to “RDM” twice.

To cancel, press the button again.

## Repeat play

### ■ Repeating a file

Press that corresponds to “RPT”.

To cancel, press the button twice.

### ■ Repeating all the files in a folder

Press that corresponds to “RPT” twice.

To cancel, press the button again.

## Switching the display

Press TEXT .

Each time the button is pressed, the display changes in the following order: Track title → Track title/Artist name → Track title/Album name → Track title/Elapsed time

---

### USB memory functions

Depending on the USB memory that is connected to the system, certain functions may not be available. Disconnecting the device and reconnecting it once again may resolve some malfunctions.

### Error messages

“USB ERROR”: This indicates a problem in the USB memory or its connection.

“NO SUPPORT”: This indicates that no MP3/WMA files are included in the USB memory player.

## USB memory

● Compatible devices

USB memory that can be used for MP3 and WMA playback

Depending on the type of USB device, playback may not be possible.

● Compatible device formats

The following device formats can be used:

• USB communication formats: USB2.0 FS (12mbps)
• File formats: FAT16/32 (Windows)
• Correspondence class: Mass storage class

MP3 and WMA files written in any format other than those listed above may not play correctly, and their file names and folder names may not be displayed correctly.

Items related to standards and limitations are as follows:

- Maximum directory hierarchy: 8 levels
- Maximum number of folders in a device: 999 (including the root)
- Maximum number of files in a device: 65025
- Maximum number of files per folder: 255

● MP3 and WMA files

MP3 (MPEG Audio LAYER 3) is a standard audio compression format.

Files can be compressed to approximately 1/10 of their original size using MP3 compression.

WMA (Windows Media® Audio) is a Microsoft audio compression format.

This format compresses audio data to a size smaller than that of the MP3 format.

There is a limit to the MP3 and WMA file standards that can be used and to the media/formats on which the files are recorded.

● MP3 file compatibility

- Compatible standards
  MP3 (MPEG1 AUDIO LAYERII, III, MPEG2 AUDIO LAYERII, III, MPEG2.5)
- Compatible sampling frequencies
  MPEG1 AUDIO LAYERII, III: 32, 44.1, 48 (kHz)
  MPEG2 AUDIO LAYERII, III: 16, 22.05, 24 (kHz)
  MPEG2.5: 8, 11.025, 12 (kHz)
- Compatible bit rates (compatible with VBR)
  MPEG1 AUDIO LAYERII, III: 32-320 (kbps)
  MPEG2 AUDIO LAYERII, III: 32-160 (kbps)
  MPEG2.5: 32-160 (kbps)
- Compatible channel modes: stereo, joint stereo, dual channel and monaural

● WMA file compatibility

- Compatible standards
  WMA Ver. 9
- Compatible sampling frequencies
  HIGH PROFILE 32, 44.1, 48 (kHz)
- Compatible bit rates
  HIGH PROFILE 32-320 (kbps, VBR)

● File names

The only files that can be recognized as MP3/WMA and played are those with the extension .mp3 or .wma.

● ID3 and WMA tags

ID3 tags can be added to MP3 files, making it possible to record the track title, artist name, etc.

The system is compatible with ID3 Ver. 1.0, 1.1, and Ver. 2.2, 2.3, 2.4 ID3 tags. (The number of characters is based on ID3 Ver. 1.0 and 1.1.)

WMA tags can be added to WMA files, making it possible to record the track title and artist name in the same way as with ID3 tags.

● MP3 and WMA playback

When a device containing MP3 or WMA files is connected, all files in the USB memory device are checked. Once the file check is finished, the first MP3 or WMA file is played. To make the file check finish more quickly, we recommend that you do not include any files other than MP3 or WMA files or create any unnecessary folders.

● Extensions

If the file extensions .mp3 and .wma are used for files other than MP3 and WMA files, they will be mistakenly recognized and played as MP3 and WMA files. This may result in large amounts of interference and damage to the speakers.

● Playback

- To play MP3 files with steady sound quality, we recommend a fixed bit rate of at least 128 kbps and a sampling frequency of 44.1 kHz.
- There is a wide variety of freeware and other encoding software for MP3 and WMA files on the market, and depending on the status of the encoding and the file format, poor sound quality or noise at the start of playback may result. In some cases, playback may not be possible at all.
- Microsoft, Windows, and Windows Media are registered trademarks of Microsoft Corporation in the U.S.A. and other countries.

CAUTION

**While driving**

Do not connect USB memory or operate the controls on the USB memory.

NOTICE

**To prevent damage to USB memory**

- Do not leave USB memory in the vehicle. The temperature inside the vehicle may become high, resulting in damage to the player.
- Do not push down on or apply unnecessary pressure to the USB memory while it is connected as this may damage the USB memory or its terminal.
- Do not insert foreign objects into the port as this may damage the USB memory or its terminal.

## Type A

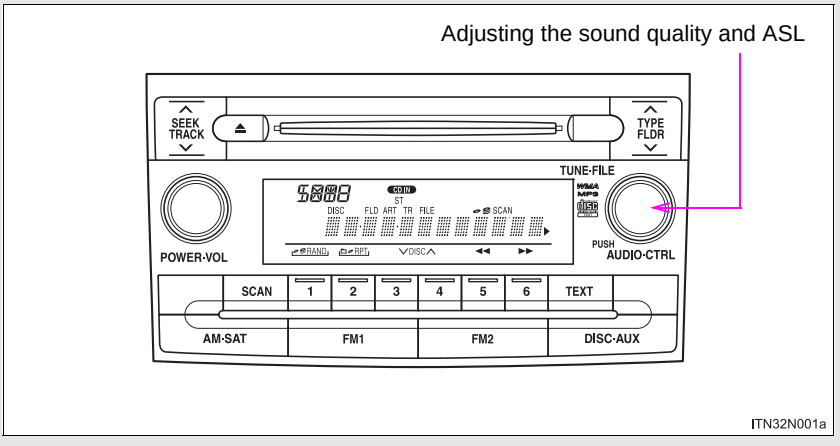


## Type B and C

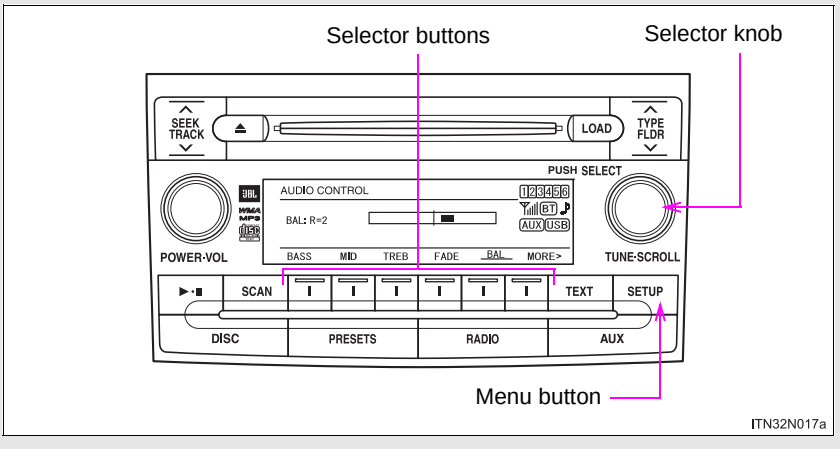

## Using the audio control function

### Changing sound quality modes

**Type A**

Pressing

selects the mode in the following order.

“BAS” → “TRE” → “FAD” → “BAL” → “ASL”

**Type B and C**

STEP 1 Press

.

STEP 2 Press that corresponds to the desired mode.

“BASS”, “MID” (type C only), “TREB”, “FADE”, or “BAL”

## Adjusting sound quality

Turning

or

adjusts the level.

| Sound quality mode | Mode displayed | Level | Turn to the left | Turn to the right |
|---|---|---|---|---|
| Low-pitched tones*1 | BAS | -5 to 5 | Low | High |
| Mid-pitched tones*1 | MID*2 | -5 to 5 | | |
| High-pitched tones*1 | TRE | -5 to 5 | | |
| Front/rear volume balance | FAD | F7 to R7 | Shifts to rear | Shifts to front |
| Left/right volume balance | BAL | L7 to R7 | Shifts to left | Shifts to right |

*1:The sound quality level is adjusted individually in each audio mode.

*2:Type C only

## Adjusting the Automatic Sound Levelizer (ASL)

### Type A

When “ASL” is selected, turning

to the right changes the “ASL” level in the order of “LOW”, “MID” and “HIGH”.

Turning

to the left turns “ASL” off.

ASL automatically adjusts the volume and tone quality according to vehicle speed.

### Type B and C

STEP 1 Press

.

STEP 2 Press that corresponds to “MORE”.

STEP 3 Press that corresponds to “ASL”.

STEP 4 Press that corresponds to the desired mode.

Type B: “LOW”, “MID”, “HIGH”, or “OFF”

Type C: “ON” or “OFF”

ASL automatically adjusts the volume and tone quality according to vehicle speed.

### ■ Setting the number of preset pages (type B and C)

The number of preset pages desired can be set from 1 to 6. The initial setting is 6 pages.

STEP 1 Press SETUP .

STEP 2 Press that corresponds to “MORE”.

STEP 3 Press that corresponds to “PRESET”.

STEP 4 Press that corresponds to the desired number of preset pages.

### ■ Language settings (type B and C)

→P. 373

---

### ■ Trademark owned by SRS Labs, Inc. (type A and B)

The audio systems utilize SRS FOCUS™ and SRS TruBass® audio enhancement technologies, under license from SRS Labs, Inc., in all mode except AM radio mode.

FOCUS, TruBass, SRS and symbols are trademarks of SRS Labs, Inc.

FOCUS and TruBass technologies are incorporated under license from SRS Labs, Inc.

# Using the AUX adapter

**This adapter can be used to connect a portable audio device and listen to it using the vehicle's speakers.**

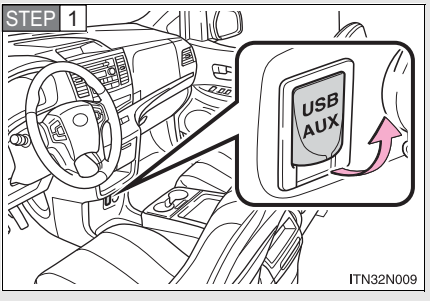


STEP 1 Open the cover and connect the portable audio device.

STEP 2 Press DISC·AUX or AUX.

■ **Operating portable audio devices connected to the audio system**

The volume can be adjusted using the vehicle's audio controls. All other adjustments must be made on the portable audio device itself.

■ **When using a portable audio device connected to the power outlet**

Noise may occur during playback. Use the power source of the portable audio device.

# Using the steering switches

**Some audio features can be controlled using the switches on the steering wheel.**

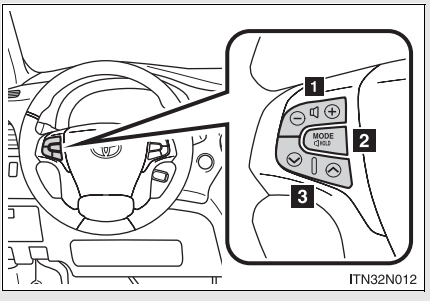


1 Volume

2 Power on, select audio source

3 Radio mode: Selects a radio station

CD mode: Selects a track, file (MP3 and WMA) and disc

Bluetooth® audio mode: Selects a track and album

iPod® mode: Selects a song

USB memory mode: Selects a file and folder

RSE mode: Selects track/file and chapter

## Turning on the power

Press MODE when the audio system is turned off.

The audio system can be turned off by holding the switch down until you hear a beep.

## Changing the audio source

Press MODE when the audio system is turned on. The audio source changes as follows each time the button is pressed. If a mode cannot be used, it will be skipped.

Type A:

FM (1, 2) → CD player → AUX → AM → SAT (1, 2, 3)

Type B and C:

FM → SAT → CD player (type B) or CD changer (type C) → RSE* → Bluetooth® audio → AUX → iPod® or USB memory → AM

*: If equipped

## Adjusting the volume

Press “+” on to increase the volume and “-” to decrease the volume.

Hold down the button to continue increasing or decreasing the volume.

## Selecting a radio station

STEP 1 Press to select the radio mode.

STEP 2 Press “∧” or “∨” on to select a radio station.

To scan for receivable stations, press and hold the switch until you hear a beep.

## Selecting a track/file or song

STEP 1 Press to select CD, RSE, Bluetooth® audio, iPod® or USB memory mode.

STEP 2 Press “∧” or “∨” on to select the desired track/file or song.

## Selecting an album

STEP 1 Press to select Bluetooth® audio mode.

STEP 2 Press and hold “∧” or “∨” on until you hear a beep.

## Selecting a folder

STEP 1 Press to select USB memory mode.

STEP 2 Press and hold “∧” or “∨” on until you hear a beep.

## Selecting a disc in the CD changer (type C only)

STEP 1 Press to select the CD mode.

STEP 2 Press and hold “∧” or “∨” on until you hear a beep.

## Selecting a track/file or chapter (vehicles with rear seat entertainment system)

STEP 1 Press to select the RSE mode.

STEP 2 Press “∧” or “∨” on to select the desired track/file or chapter.

### Canceling automatic selection of a radio station

Press again.

**CAUTION**

**To reduce the risk of an accident**

Exercise care when operating the audio switches on the steering wheel.

# Bluetooth® audio system*

**The Bluetooth® audio system enables you to enjoy music played on a portable digital audio player (portable player) from the vehicle speakers via wireless communication.**

**This audio system supports Bluetooth®, a wireless data system capable of playing portable audio music without cables. If your portable player does not support Bluetooth®, the Bluetooth® audio system will not function.**

### Vehicles with a navigation system

Owners of models equipped with a navigation system should refer to the “NAVIGATION SYSTEM OWNER’S MANUAL”.

### Vehicles without a navigation system


| Title | Page |
|---|---|
| Using the Bluetooth® audio system | P. 433 |
| Operating a Bluetooth® enabled portable player | P. 439 |
| Setting up a Bluetooth® enabled portable player | P. 441 |
| Bluetooth® audio system setup | P. 446 |


■ **Conditions under which the system will not operate**

- If using a portable player that does not support Bluetooth®
- If the portable player is switched off
- If the portable player is not connected
- If the portable player’s battery is low
- If the portable player is behind the seat or in the glove box or console box
- If metal is covering or touching the portable player

*: If equipped

### ■ When transferring ownership of the vehicle

Be sure to initialize the system to prevent personal data from being improperly accessed. (→P. 516)

### ■ About Bluetooth®

Bluetooth is a registered trademark of Bluetooth SIG. Inc.

### ■ Compatible models

- Bluetooth® specifications:
  Ver. 1.2, or higher (Recommended: Ver. 2.0+EDR or higher)
- Following Profiles:
  - A2DP (Advanced Audio Distribution Profile) Ver. 1.0 or higher
  - AVRCP (Audio/Video Remote Control Profile) Ver. 1.0 or higher (Ver. 1.3 or higher recommended)

Portable players must correspond to the above specifications in order to be connected to the Bluetooth® audio system. However, please note that some functions may be limited depending on the type of portable player.

### ■ Certification for the Bluetooth® audio system

FCC ID: AJDK025
IC ID: 775E-K025
MADE IN THAILAND

This device complies with Part 15 of the FCC Rules and RSS-Gen of IC Rules. Operation is subject to the following two conditions: (1) This device may not cause harmful interference, and (2) This device must accept any interference received, including interference that may cause undesired operation.

CAUTION

**FCC WARNING**

Changes or modifications not expressly approved by the party responsible for compliance could void the user's authority to operate the equipment.

Radio Frequency Radiation Exposure. This equipment complies with FCC/IC radiation exposure limits set forth for uncontrolled equipment and meets the FCC radio frequency (RF) Exposure Guidelines in Supplement C to OET65 and RSS-102 of the IC radio frequency (RF) Exposure rules. This equipment has very low levels of RF energy that it deemed to comply without maximum permissive exposure evaluation (MPE). But it is desirable that it should be installed and operated with at least 7.9 in. (20 cm) and more between the radiator and person's body (excluding extremities: hands, wrists, feet and ankles).

This transmitter must not be co-located or operated in conjunction with any other antenna or transmitter.

**While driving**

Do not connect portable players or operate the controls.

NOTICE

**To prevent damage to portable players**

Do not leave portable players in the vehicle. The temperature inside the vehicle may become high, resulting in damage to the player.

# Using the Bluetooth® audio system

## ■ Audio unit

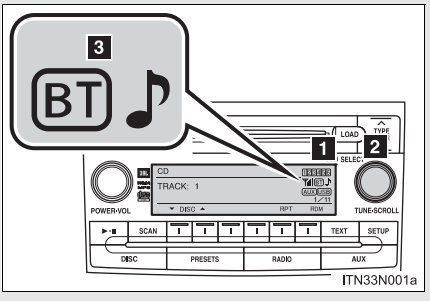


**1** Display
A message, name, number, etc. is displayed.

Lower-case characters and special characters cannot be displayed.

**2** Selects items such as menu and number
Turn: Selects an item
Press: Inputs the selected item

**3** Bluetooth® connection condition

If “BT” is not displayed, the Bluetooth® audio system cannot be used.

## ■ Microphone

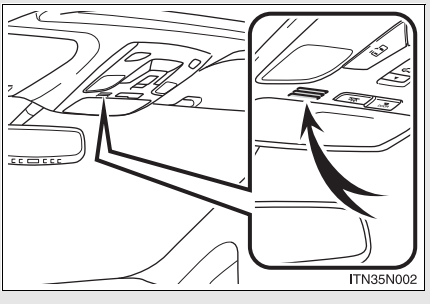

## Operating the system using voice commands

By following voice guidance instructions output from the speaker, voice commands enable to the operation of the Bluetooth® audio system without the need to check the display or operate

.

### Operation procedure when using voice commands

Press the talk switch and follow voice guidance instructions.

### Auxiliary commands when using voice commands

The following auxiliary commands can be used when operating the system using a voice command:

Cancel: Exits the Bluetooth® audio system
Repeat: Repeats the previous voice guidance instruction
Go back: Returns to the previous procedure
Help: Reads aloud the function summary if a help comment is registered for the selected function

## Using the Bluetooth® audio system for the first time

Before using the Bluetooth® audio system, it is necessary to register a Bluetooth® enabled portable player in the system. Follow the procedure below to register (pair) a portable player:

STEP 1 Press AUX until “BT AUDIO” is displayed.

STEP 2 Press I that corresponds to “SETUP”.

The introductory guidance and portable player name registration instructions are heard.

STEP 3 Select “Pair Audio Player (Pair Audio)” using a voice command or TUNE·SCROLL .

STEP 4 Register a portable player name by either of the following methods:

a. Select “Record Name” using TUNE·SCROLL , and say the name to be registered.

b. Press the talk switch and say the name to be registered.

A voice guidance instruction to confirm the input is heard.

STEP 5 Select “Confirm” using a voice command or

.

A passkey is displayed and heard, and a voice guidance instruction for inputting the passkey into the portable player is heard.

STEP 6 Input the passkey into the portable player.

Refer to the manual that comes with the portable player for the operation of the portable player.

Guidance for registration completion is heard.

If the portable player has a Bluetooth® phone, the phone can be registered at the same time. (→P. 496)

## Menu list of the Bluetooth® audio system

### ■ Normal operation

| First menu | Second menu | Third menu | Operation detail |
|---|---|---|---|
| “Setup” | “BT•A Setup” | “Pair Audio Player” | Registering a portable player |
| | | “Select Audio Player” | Selecting a portable player to be used |
| | | “Change Name” | Changing the registered name of a portable player |
| | | “List Audio Players” | Listing the registered portable players |
| | | “Set Passkey” | Changing the passkey |
| | | “Delete Audio” | Deleting a registered portable player |
| | “System Setup”* | “Guidance Volume” | Setting voice guidance volume |
| | | “Device Name” | Displaying the Bluetooth® device address and name |
| | | “Initialize” | Initializing the system |

“BT•A Setup” can be canceled by pressing the on-hook switch or saying the voice command, “Cancel”.

*: Selection of system set-up is possible only by the operation of the steering wheel switch.

■ **When using a voice command**

For numbers, say a combination of single digits from zero to nine.

Say the command correctly and clearly.

■ **Situations in which the system may not recognize your voice**

- When driving on rough roads
- When driving at high speeds
- When air is blowing out of the vents onto the microphone
- When the air conditioning fan emits a loud noise

■ **Operations that cannot be performed while driving**

- Operating the system with

- Registering a portable player to the system

■ **Changing the passkey**

→P. 444

# Operating a Bluetooth® enabled portable player

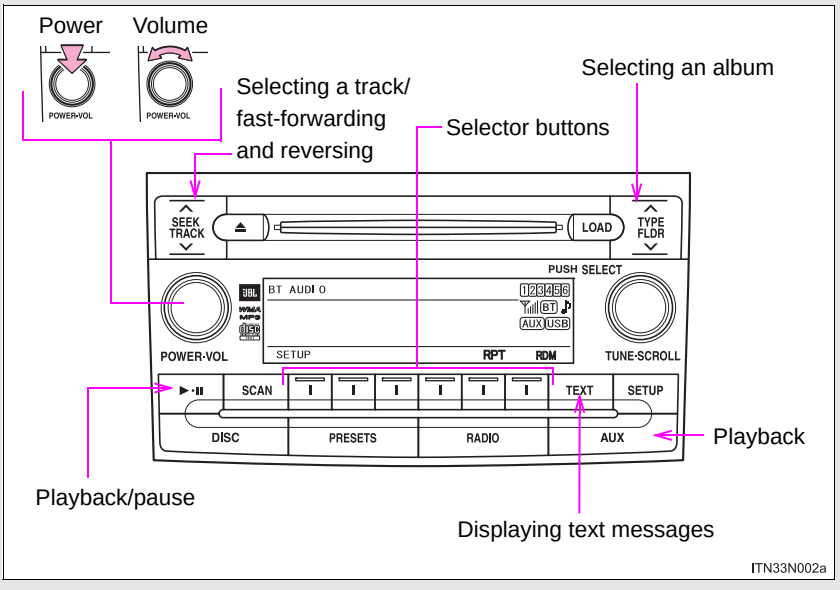


## Selecting an album

Press “∧” or “∨” on

.

## Selecting tracks

Press “∧” or “∨” on

to select the desired track.

## Playing and pausing tracks

Press ▶·■ .

## Fast-forwarding and rewinding tracks

Press and hold "∧" or "∨" on SEEK TRACK .

## Switching the display

Press TEXT .

Each time the button is pressed, the display changes in the following order: Track title → Track title/Artist name → Track title/Album name → Track title/Elapsed time

## Using the steering wheel audio switches

→P. 426

---

### ■ Bluetooth® audio system functions

Depending on the portable player that is connected to the system, certain functions may not be available.

# Setting up a Bluetooth® enabled portable player

**Registering a portable player in the Bluetooth® audio system allows the system to function. The following functions can be used for registered portable players:**

## ■ Functions and operation procedures

STEP 1 Press

until “BT AUDIO” is displayed.

STEP 2 Press that corresponds to “SETUP”

STEP 3 Select one of the following functions using a voice command or

.

- Registering a portable player
  “Pair Audio Player”
- Selecting a portable player to be used
  “Select Audio Player”
- Changing the registered name
  “Change Name”
- Listing the registered portable players
  “List Audio Players”
- Changing the passkey
  “Set Passkey”
- Deleting a registered portable player
  “Delete Audio Player”

## Registering a portable player

Select “Pair Audio Player” using a voice command or TUNE·SCROLL, and perform the procedure for registering a portable player. (→P. 435)

## Selecting a portable player to be used

STEP 1 Select “Select Audio Player” using a voice command or TUNE·SCROLL.

STEP 2 Select the portable player to be used by either of the following methods, and select “Confirm” by using a voice command or TUNE·SCROLL:

a. Press the talk switch and say the name of the desired portable player.

b. Press the talk switch and say “List Audio Players”. When the name of the desired portable player is read aloud, press the talk switch.

STEP 3 Press the talk switch and say “From Car” or “From Audio”, and select “Confirm” by using a voice command or TUNE·SCROLL.

**Vehicles without a smart key system**

When the portable player is on standby for the connection, it will be automatically connected whenever the engine switch is in either “ACC” or “ON” position.
If a portable player that has already been paired is selected, it is necessary to select “From Car” or “From audio” setting.

**Vehicles with a smart key system**

When the portable player is on standby for the connection, it will be automatically connected whenever the “ENGINE START STOP” switch is in either ACCESSORY or IGNITION ON position.
If a portable player that has already been paired is selected, it is necessary to select “From Car” or “From audio” setting.



## Changing the registered name of a portable player

STEP 1 Select “Change Name” using a voice command or TUNE·SCROLL .

STEP 2 Select the name of the portable player to be changed by either of the following methods, and select “Confirm” using a voice command or TUNE·SCROLL :

a. Press the talk switch and say the name of the desired portable player.

b. Press the talk switch and say “List Audio Players”. When the name of the desired portable player is read aloud, press the talk switch.

STEP 3 Press the talk switch or select “Record Name” using TUNE·SCROLL , and say the new name.

STEP 4 Select “Confirm” using a voice command or TUNE·SCROLL .

## Listing the registered portable players

Select “List Audio Players” using a voice command or TUNE·SCROLL. The list of registered portable players will be read aloud.
When listing is complete, the system returns to “BT•A Setup”.

Pressing the talk switch while the name of a portable player is being read aloud selects the portable player, and the following functions will become available:

- Selecting a portable player: “Select Audio Player”
- Changing a registered name: “Change Name”
- Deleting a portable player: “Delete Audio Player”

## Changing the passkey

STEP 1 Select “Set Passkey” using a voice command or TUNE·SCROLL.

STEP 2 Press the talk switch, say a 4 to 8-digit number, and select “Confirm” using a voice command or TUNE·SCROLL.

STEP 3 When the entire number to be registered as a passkey has been input, press TUNE·SCROLL again.

If the number to be registered has 8 digits, pressing of the knob is not necessary.

## Deleting a registered portable player

STEP 1 Select “Delete Audio Player” using a voice command or TUNE·SCROLL .

STEP 2 Select the portable player to be deleted by either of the following methods and select “Confirm” using a voice command or TUNE·SCROLL :

a. Press the talk switch and say the name of the desired portable player.

b. Press the talk switch and say “List Audio Players”. When the name of the desired portable player is read aloud, press the talk switch.

If the portable player to be deleted is paired as a Bluetooth® phone, the registration of the mobile phone can be deleted at the same time. A voice guidance instruction to delete a mobile phone is heard.

STEP 3 Select “Confirm” by using a voice command or TUNE·SCROLL .

### ■ The number of portable players that can be registered

Up to 2 portable players can be registered in the system.

# Bluetooth® audio system setup

## ■ System setup items and operation procedures

→P. 512

# Rear seat entertainment system features*

**The rear seat entertainment system is designed to allow the rear passengers to enjoy audio and DVD video separately from the front audio system.**

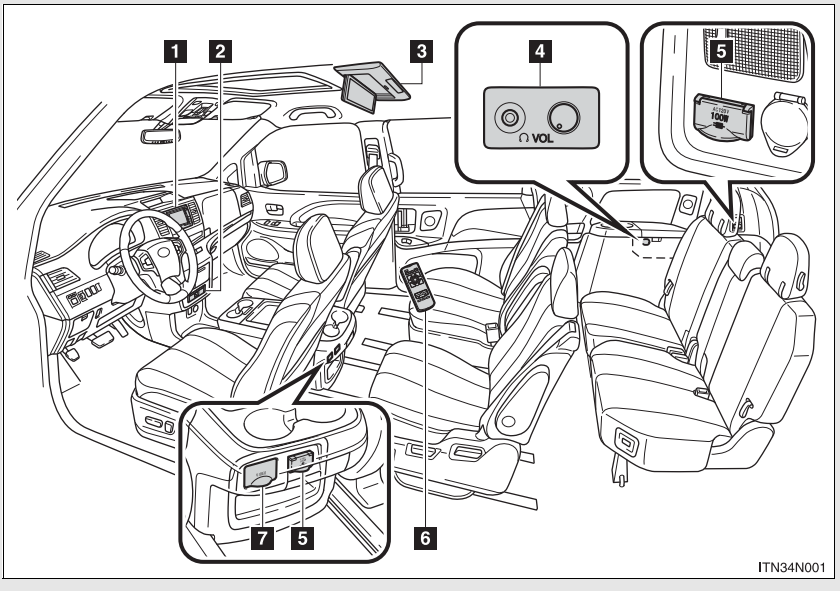


1 Front audio system
2 DVD player
3 Display
4 Headphone volume control dials and headphone jacks
5 Power outlets
6 Rear seat entertainment system controller
7 A/V input adapter



*: If equipped

## Opening and closing the display

### ■ Opening and closing the display

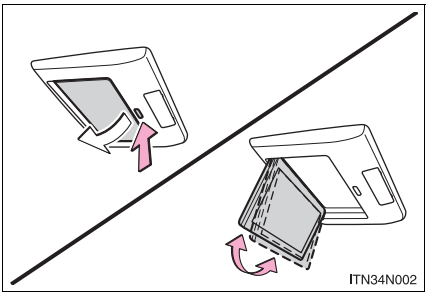


Press the lock release button to open the display.

Pull the display down to an easily viewable angle (at 100° or 120°).

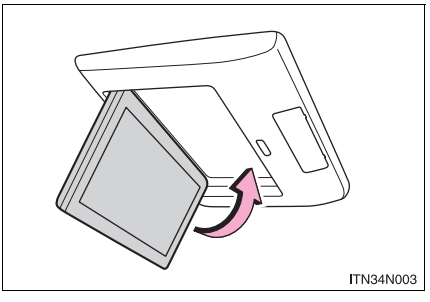


To close the display, push the display up until a click is heard.

The illumination of the screen is automatically turned off when the display is closed. However, the rear seat entertainment system is not turned off. (The sound is not turned off.)

### ■ Caution display

This screen appears for a few seconds when the rear display is opened.

Vehicles without navigation system only: Press

while this screen is displayed to change the language. (The screen will be displayed for approximately 4 seconds.)

## Loading a disc

STEP 1

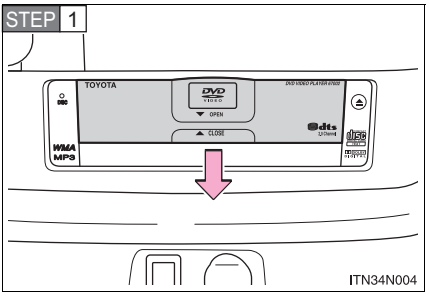


Open the cover.

STEP 2

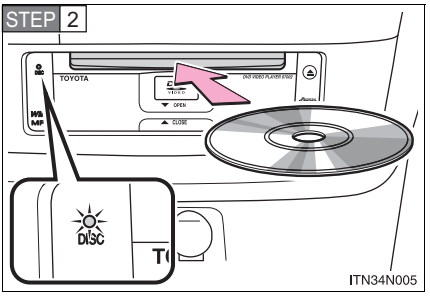


Insert the disc into the slot with the label side up.

The “DISC” indicator light turns on while the disc is loaded.

The player will play the track or chapter, and will repeat it after it reaches the end.

STEP 3 Close the cover.

## Ejecting a disc

STEP 1 Open the cover.

STEP 2

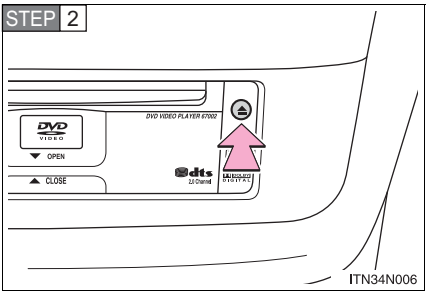


Press ⏏ and remove the disc.

STEP 3 Close the cover.

## Turning the rear seat entertainment system power on/off

### Operating from the front audio system

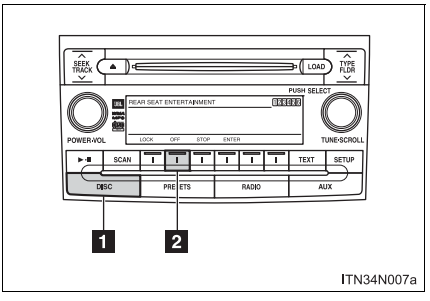


1 Selecting either the front audio system or DVD player audio for the speakers

2 Press that corresponds to “OFF”, to turn off the rear seat entertainment system.

Press that corresponds to “ON”, to turn on the rear seat entertainment system.

### Operating from the remote controller

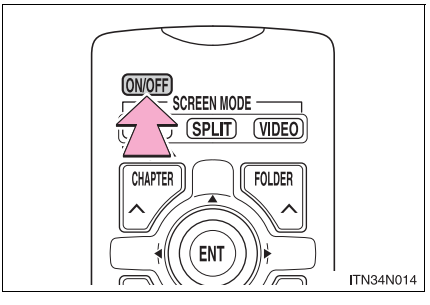


Press ON/OFF to control the rear seat entertainment screen.

## Setting the rear seat entertainment system lock

### Vehicles with a navigation system

Owners of models equipped with a navigation system should refer to the “NAVIGATION SYSTEM OWNER’S MANUAL”.

### Vehicles without a navigation system

### Front audio system

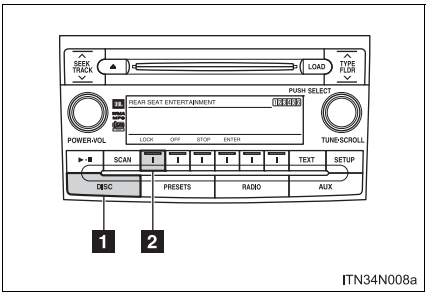


**1** Selecting either the front audio system or DVD player audio for the speakers

**2** Selecting “LOCK” or “UNLOCK” for the rear seat entertainment system

The rear seat entertainment system lock remains on, even when the engine switch is turned off.

### DVD player display

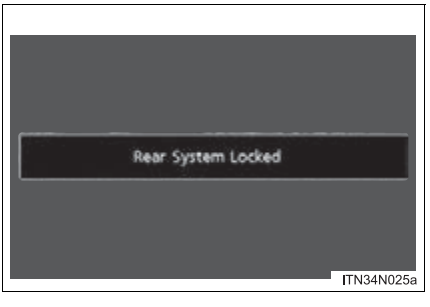

## Adjusting and turning off the screen

### Adjusting the screen

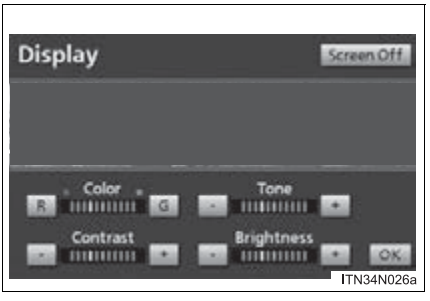


Press DISPLAY on the remote controller.

Select the brightness, contrast, tone or color, and make adjustments. Press ENT to input it.

| | “-” or “Red” | “+” or “Green” |
|---|---|---|
| “Brightness” | Darkens | Brightens |
| “Contrast” | Weakens the contrast | Strengthens the contrast |
| “Tone” (if displayed) | Weakens the tone | Strengthens the tone |
| “Color” (if displayed) | Strengthens the red color | Strengthens the green color |

### ■ Turning off the screen

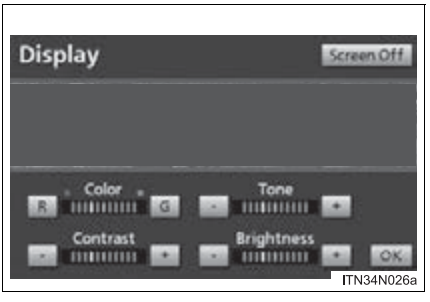


Press DISPLAY on the remote controller.

Press the “Screen off” displayed on the screen.

Press DVD , SPLIT , VIDEO or DISPLAY to turn on the screen.

## Headphone jacks

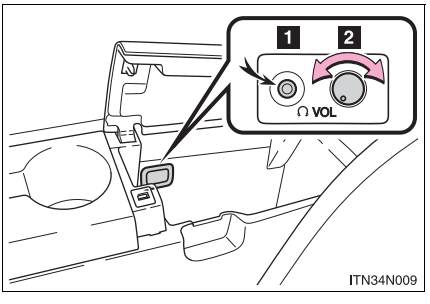


1 To use the headphones, connect them to the jack.

2 To adjust the volume

Turn the knob clockwise to increase the volume.

Turn the knob counterclockwise to decrease the volume.

■ **The rear seat entertainment system can be used when**

**Vehicles without a smart key system**
The engine switch is in the “ACC” or “ON” position.
**Vehicles with a smart key system**
The “ENGINE START STOP” switch is in the ACCESSORY or IGNITION ON mode.

■ **Discs that can be used**

Discs with the marks shown below can be used.
Playback may not be possible depending on recording format or disc features, or due to scratches, dirt or deterioration.

■ **When ⃠ appears on the screen**

It indicates that the selected switch is inoperable.

### Headphone audio during split screen display

Audio from the left-hand screen will be played through the left headphone, and audio from the right-hand screen will be played through the right headphone.

### Error messages

| Message | Cause | Correction Procedures |
|---|---|---|
| No disc found | There is no disc in the DVD player | Insert a disc |
| Check disc | • The disc is dirty or damaged<br>• The disc is inserted upside down | • Clean the disc<br>• Insert the disc correctly |
| DVD error | • There is a malfunction within the system<br>• Operation is stopped due to a high temperature inside the player | • Eject the disc and allow the player to cool down<br>• If the malfunction still exists, take the vehicle to your Toyota dealer |
| No music files found | This indicates that no playable data is included in the disc | Eject the disc |
| Region code error | The DVD has an incompatible DVD region code | Insert a DVD with a compatible region code |

## ■Before using the remote controller (for new vehicle owners)

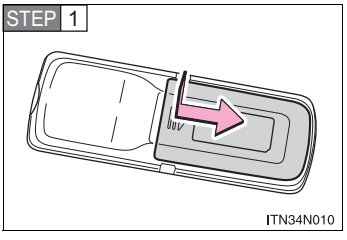


Remove the cover.

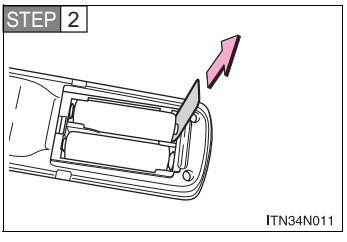


Remove the insulating sheet.

## ■When the remote controller batteries are fully depleted

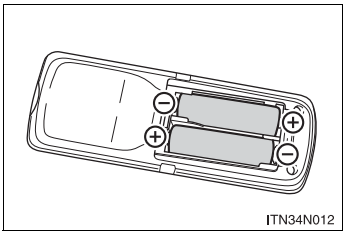


Remove the depleted batteries and install new 2 AA batteries.

## ■If the remote controller batteries are discharged

The following symptoms may occur.

- The rear seat entertainment system control will not function properly.
- The operational range is reduced.

## ■When using AA batteries

Batteries can be purchased at your Toyota dealer, electric appliance shops, or camera stores.

Replace only with the same or equivalent type recommended by a Toyota dealer.

Dispose of used batteries according to the local laws.

### Headphones

With some headphones generally available on the market, it may be difficult to receive signals properly. Toyota recommends the use of Toyota genuine wireless headphones.

Please contact your Toyota dealer for further details.

### Volume

- Adjust the volume when you connect the headphones to the jack. Loud volume from headphones may cause hearing loss or damage.
- Conversational speech on some DVDs is recorded at a low volume to emphasize the impact of sound effects. If you adjust the volume assuming that the conversations represent the maximum volume level that the DVD will play, you may be startled by louder sound effects or when you change to a different audio source. Be sure to adjust the volume with this in mind.



**CAUTION**

**While driving**

Do not use headphones.
Doing so may cause an accident, resulting in death or serious injury.

**When the rear seat entertainment system is not used**

Keep the display closed.
In the event of an accident or sudden braking, the opened display may hit an occupant's body, resulting in injury.

**To prevent accidents and electric shock**

Do not disassemble or modify the remote controller.

**When the remote controller is not used**

Stow the remote controller.
Injuries may result in the event of an accident or sudden braking.

**Removed battery and other parts**

Keep away from children.
These parts are small and if swallowed by a child they can cause choking.

NOTICE

■ **For normal operation after replacing the battery**

Observe the following precautions to prevent accidents.

- Always work with dry hands.
  Moisture may cause the battery to rust.
- Do not touch or move any other components inside the remote controller.
- Do not bend either of the battery terminals.

# Using the DVD player (DVD video)

## ■ Remote controller

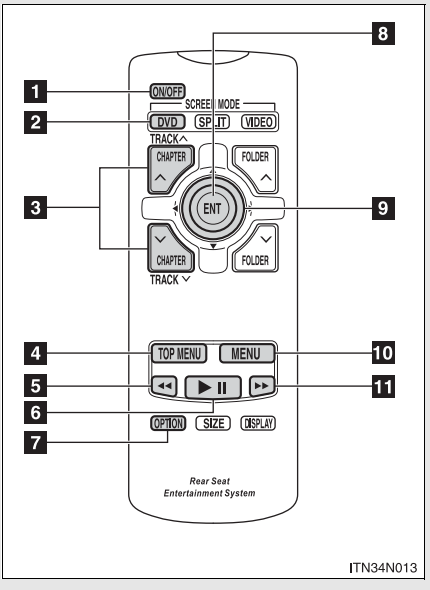


1 Turning on or off the rear entertainment screen
2 Turning on the DVD mode
3 Selecting a chapter
4 Turning on the title selection screen
5 Reversing a disc
6 Playing/pausing a disc
7 Turning on or off the operation switches (icon) on the display
8 Inputting the selected switch (icon)
9 Selecting a switch (icon)
10 Turning on the menu screen
11 Fast forwarding a disc

## Display (Page 1)

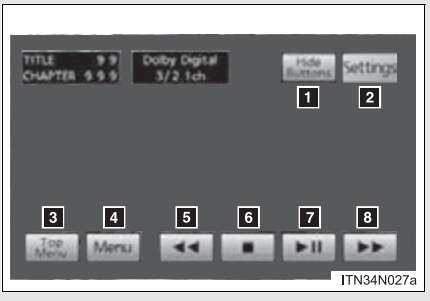


1. Turning off the operation switches (icon) on the display
2. Displaying page 2
3. Turning on the title selection screen for the disc
4. Turning on the menu screen for the disc
5. Reversing a disc
6. Stopping a disc
7. Pausing the disc/canceling the pause
8. Fast forwarding a disc

## Display (Page 2)

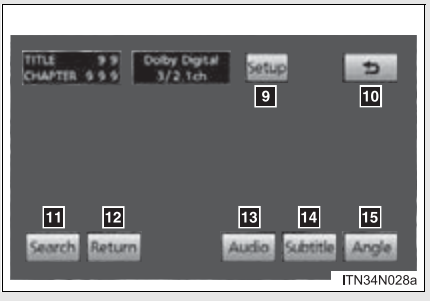


9 Displaying the initial setting screen

10 Displaying page 1

11 Search for a title

12 Returning to the previous screen

13 Changing the audio language

14 Changing the subtitle language

15 Changing the angle

## Front audio system

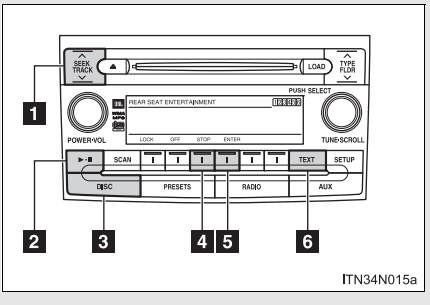


1 Press: Selecting a chapter
Press and hold: Fast-forwarding/reversing a disc

2 Playing/pausing a disc

3 Selecting the DVD mode

4 Stopping/playing a disc

5 Starting a disc

6 Displaying the elapsed time

### NOTICE

**Cleaning the display**

Wipe the display with a dry soft cloth.
If the screen is wiped with a rough cloth, the surface of the screen may be scratched.

NOTICE

■ **To prevent damage to the remote controller**

- Keep the remote control away from direct sunlight, temperature heat and high humidity.
- Do not drop or knock the remote controller against hard objects.
- Do not sit on or place heavy objects on the remote controller.

■ **DVD player**

Never try to disassemble or oil any part of the DVD player. Do not insert anything other than a disc into the slot.

## Turning on or off the operation switches

Press OPTION to turn on the operation switches.

Press OPTION once again or select Hide Buttons to turn off the operation switches.

## Turning on the title selection screen

Press TOP MENU or select Top Menu to turn on the title selection screen.

For the operation of the title selection screen, see the separate manual for the DVD disc.

## Turning on the menu screen

Press MENU or select Menu to turn on the menu screen. For the operation of the menu screen, see the separate manual for the DVD disc.

## Slow playback

Press ▶II or select ▶II to pause video and then press ▶▶ or select ▶▶. Video is played slowly when you press ▶▶ or select ▶▶ by pressing and holding ENT.

## Returning to the previous screen

Select Return to return to the previous screen. For the operation of the menu screen, see the separate manual for the DVD disc.

## Searching for a title

STEP 1 Select Search on the control icon screen.

STEP 2

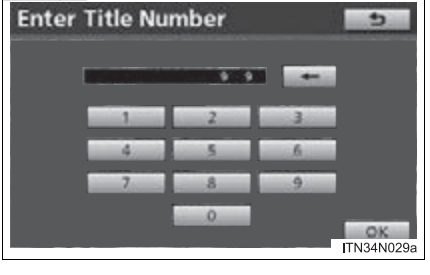


Input the desired title number and then select OK.

← : deletes the last input number

↩ : returns to the previous screen

## Changing the subtitle language

STEP 1 Select Subtitle on the control icon screen.

STEP 2

ITN34N030a

Select Subtitle to display the subtitle language screen.

Each time you press ENT, the next available language is selected.

: returns to the previous screen

## Changing the audio language

STEP 1 Select Audio on the control icon screen.

STEP 2

ITN34N031a

Select Audio to display the audio language screen.

Each time you press ENT, the next available language is selected.

: returns to the previous screen

## Changing the angle

STEP 1 Select Angle on the control icon screen.

STEP 2

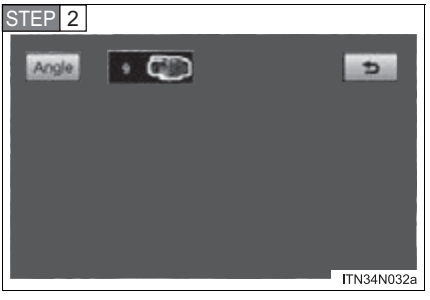


Select Angle to display the screen to change the angle.

Each time you press ENT, the next available angle is selected.

: returns to the previous screen

### DVD player and DVD video discs

This DVD player is compatible NTSC color TV formats. DVD video discs conforming to other formats such as PAL or SECAM cannot be used.

### Region codes

Some DVD video discs have a region code indicating where you can use them. If the DVD video disc is not labeled “ALL” or “1”, you cannot use it in this DVD player. If you attempt to play an inappropriate DVD video disc in this player, “Region code error” appears on the screen. Even if the DVD video disc does not have a region code, in some cases you cannot use it.

## Marks shown on DVD video discs

| | |
|---|---|
| NTSC | Indicates NTSC format of color TV. |
| 2 | Indicates the number of audio tracks. |
| 2 | Indicates the number of language subtitles. |
| 3 | Indicates the number of angles. |
| 16:9 LB 4:3 | Indicates the screen to be selected.<br>Wide screen: 16:9<br>Standard: 4:3 |
| ALL 1 | Indicates regions in which this video disc can be played.<br>ALL: all countries<br>Number: region code |

## DVD video disc glossary

- DVD video discs: Digital Versatile Discs that hold world's standard video. DVD video discs have adopted "MPEG2", one of the world standards of digital compression technologies. The picture data is compressed by 1/40 on average and stored. Variable rate encoded technology has been adopted in which the volume of data assigned to the picture is changed depending on the picture format. Audio data is stored using PCM and Dolby digital, which enables higher quality of sound. Furthermore, multi-angle and multi-language features will also help you enjoy the more advanced technology of DVD video.
- Viewer restrictions: This feature limits what can be viewed in conformity with the level of restrictions of the country. The level of restrictions varies depending on the DVD video disc. Some DVD video discs cannot be played at all, or violent scenes are skipped or replaced with other scenes.
  - Level 1: DVD video discs for children can be played.
  - Level 2 - 7: DVD video discs for children and G-rated movies can be played.
  - Level 8: All types of DVD video discs can be played.

- Multi-angle feature: Allows you to enjoy the same scene at different angles.
- Multi-language feature: Allows you to select the language of the subtitles and audio.
- Region codes: Region codes are provided on DVD players and DVD discs. If the DVD video disc does not have the same region code as the DVD player, you cannot play the disc on the DVD player.
- Audio: This DVD player can play liner PCM, Dolby digital, dts and MPEG audio format DVD. Other decoded type cannot be played.
- Title and chapter: Video and audio programs stored on DVD video discs are divided into sections by title and chapter.
- Title: The largest unit of the video and audio programs stored on DVD video discs. Usually, one piece of a movie, one album, or one audio program is assigned as a title.
- Chapter: A unit smaller than a title. A title comprises multiple chapters.

### Audio

Manufactured under licence from Dolby Laboratories. “Dolby” and the double-D symbol are trademarks of Dolby Laboratories.
Manufactured under license under U.S. Patent #’s: 5,451,942; 5,956,674; 5,974,380; 5,978,762; 6,487,535 & other U.S. and worldwide patents issued & pending. DTS is a registered trademark and the DTS logos, Symbol and DTS 2.0 Channel are trademarks of DTS, Inc. ©1996-2008 DTS, Inc. All Rights Reserved.

# Using the DVD player (video CD)

## Remote controller

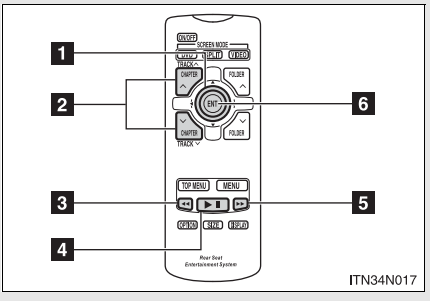


1. Selecting a switch (icon)
2. Selecting a chapter
3. Reversing a disc
4. Playing/pausing a disc
5. Fast forwarding a disc
6. Inputting the selected switch (icon)

## Display (page 1)

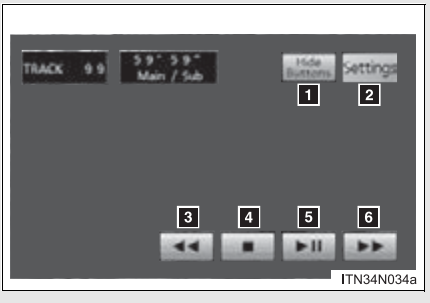


1. Turning off the menu screen
2. Displaying page 1
3. Reversing a disc
4. Stopping a disc
5. Pausing the disc/canceling the pause
6. Fast forwarding a disc

## Display (page 2)

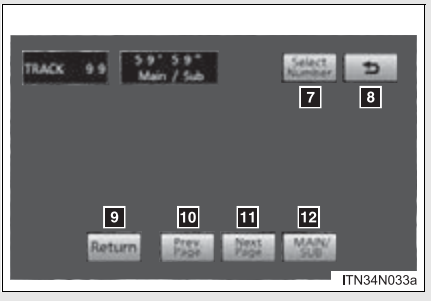


7 Selecting a disc menu number

8 Displaying page 2

9 Turning on the disc menu

10 Returning to the previous page screen (with the disc menu displayed)

11 Proceeding to the next page screen (with the disc menu displayed)

12 Changing to a multiplex transmission

## Front audio system

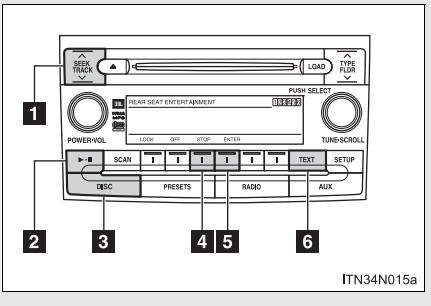


1 Press: Selecting a chapter
Press and hold: Fast-forwarding/reversing a disc

2 Playing/pausing a disc

3 Selecting the DVD mode

4 Stopping/playing a disc

5 Starting a disc

6 Displaying the elapsed time

## Selecting a desired screen

### ■ Selecting a menu number

STEP 1 Select Select Number on the control icon screen.

STEP 2

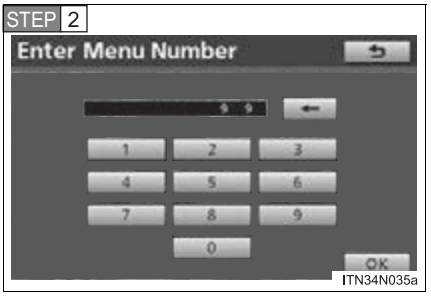


Input the desired menu number and select OK .

← : deletes the last input number

↩ : returns to the previous screen

### ■ Searching manually

Select Prev. Page or Next Page on the screen, or press CHAPTER ^ or CHAPTER v until the desired screen appears.

## Changing the sound-multiplex mode

Select MAIN/SUB on the control icon screen. The mode cycles through each time the ENT is pressed.

“Main” → “Sub” → “Main/Sub”

## Slow playback

Press ▶II or select ▶II to pause video and then press ▶▶ or select ▶▶. Video is played slowly when you press ▶▶ or select ▶▶ by pressing and holding ENT.

# Using the DVD player (audio CD/CD text)

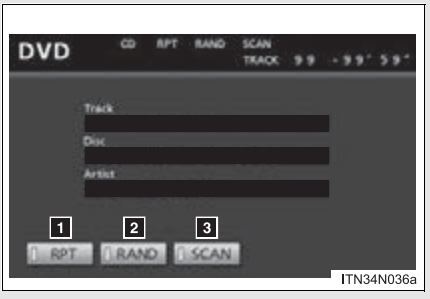

ITN34N036a

Press DVD to display the control screen.

1 Repeat play
2 Random playback
3 Search playback

## Front audio system

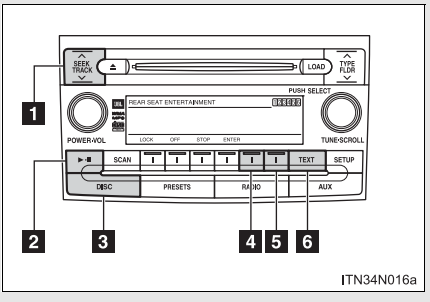

ITN34N016a

1 Press: Selecting a chapter
Press and hold: Fast-forwarding/reversing a disc
2 Playing/pausing a disc
3 Selecting the DVD mode
4 Repeat play (→P. 391)
5 Random playback (→P. 390)
6 Displaying the elapsed time

## Canceling random, repeat and scan play

Select RPT , RAND or SCAN again.

# Using the DVD player (WMA/MP3 discs)

## ■ Using the control screen

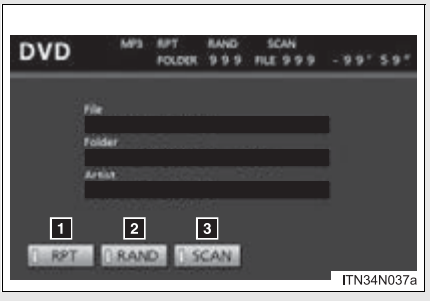


Press DVD to display the control screen.

1. Repeat play
2. Random playback
3. Search playback

## ■ Front audio system

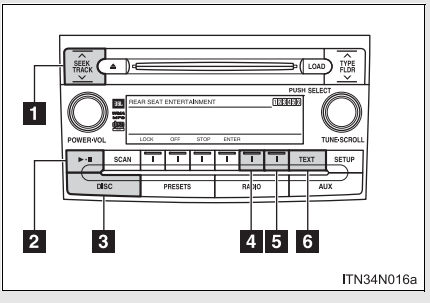


1. Press: Selecting a chapter
   Press and hold: Fast-forwarding/reversing a disc
2. Playing/pausing a disc
3. Selecting the DVD mode
4. Repeat play (→P. 400)
5. Random playback (→P. 399)
6. Displaying the elapsed time

## Repeat play

### ■ Repeating a file

Select RPT .

### ■ Repeating all of the files in a folder

Select RPT , and press and hold ENT .

## Random playback

### ■ Playing files from a particular folder in random order

Select RAND .

### ■ Playing all of the files on a disc in random order

Select RAND , and press and hold ENT .

## Search playback

### ■ Selecting the desired file by cueing the files in the folder

Select SCAN .

The player will scan all the files in the folder. Each file will be played for 10 seconds.

### ■ Selecting the desired file by cueing the folders on the disc

Select SCAN , and press and hold ENT .

The player will scan all the folders on the disc. The first file in each folder will be played for 10 seconds.

---

### ■ Canceling random, repeat and play back

Select RPT , RAND or SCAN again.

# Using the video mode

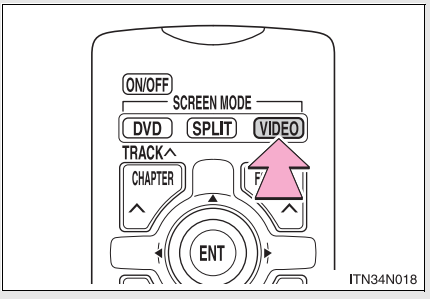


Press VIDEO to select the video mode.

Before switching to the video mode, connect the audio device to the A/V input adapter.

## Using the adapter

### Type A

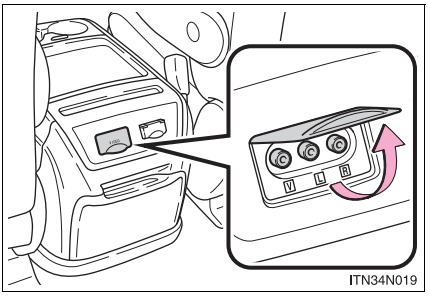


Open the cover.

The A/V input adapter is composed of 3 input adapters.

Yellow: Image input adapter

White: Left channel audio input adapter

Red: Right channel audio input adapter

### Type B

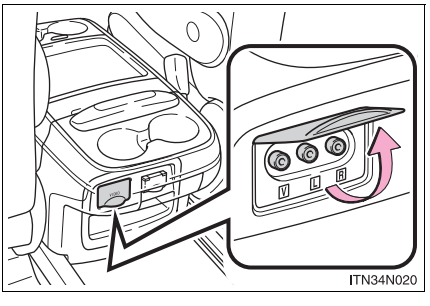

### A/V input adapter

The rear seat entertainment system plays video and sound when an audio-video device is connected to the A/V input adapter. For details, refer to the manufacturer's instructions.

### Power outlet

The power outlet is used to connect the audio device. (→P. 552)

NOTICE

**When the A/V input adapter is not in use**

Keep the A/V input adapter cover closed.
Inserting anything other than an appropriate plug may cause electrical failure or short circuit.

# Changing the DVD initial setting

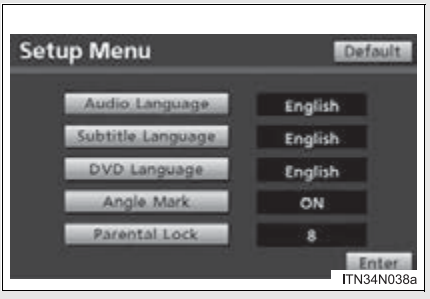


Select Setup to display the initial setting screen.

The following initialization can be changed here.

- Audio language
- Subtitle language
- DVD language
- Angle mark
- Parental lock

## Changing the audio language

Select “Audio Language”.

Select the language you want to hear, and press ENT to input it.

: returns to the previous screen

Select “Others” if you cannot find the language you want to hear. Enter the appropriate 4-digit language code. (→P. 485)

Input the desired audio language code and the select OK .

: deletes the last input number

: returns to the previous screen

If a code that is not in the list is entered, “Incorrect Code” will appear on the screen.

## Changing the subtitle language

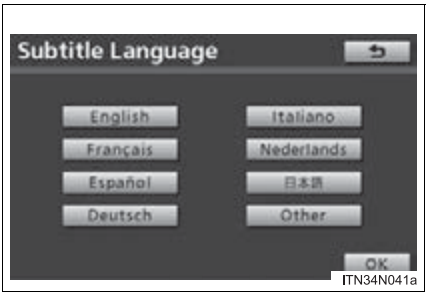


Select “Subtitle Language”.

Select the language you want to read, and press ENT to input it.

: returns to the previous screen

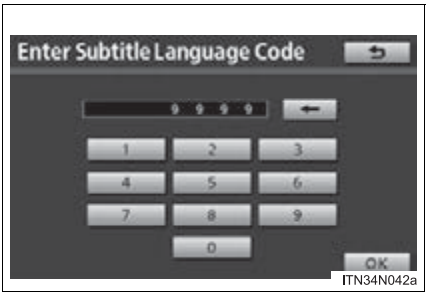


Select “Others” if you cannot find the language you want to read. Enter the appropriate 4-digit language code. (→P. 485)

Input the desired subtitle language code and the select OK.

: deletes the last input number

: returns to the previous screen

If a code that is not in the list is entered, “Incorrect Code” will appear on the screen.

## Changing the DVD language

Select “DVD Language”.

Select the language you want to read, and press ENT to input it.

: returns to the previous screen

Select “Others” if you cannot find the language you want to read. Enter the appropriate 4-digit language code. (→P. 485)

Input the desired DVD language code and the select OK .

: deletes the last input number

: returns to the previous screen

If a code that is not in the list is entered, “Incorrect Code” will appear on the screen.

## Turning on or off the angle mark

The angle mark can be turned on for discs that are multi-angle compatible.

Each time you press

when “Angle Mark” is selected, the angle mark turns on or off alternately.

## Setting viewer restriction levels

Setting a password allows the viewer restriction to be effective.

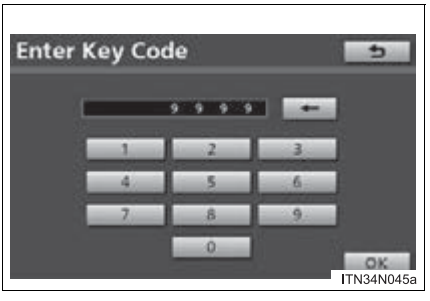


Input the desired personal code and select OK .

: deletes the last input number

: returns to the previous screen

The setting cannot be changed unless the password is entered.

When you forget the password, initialize the password. (→P. 484)

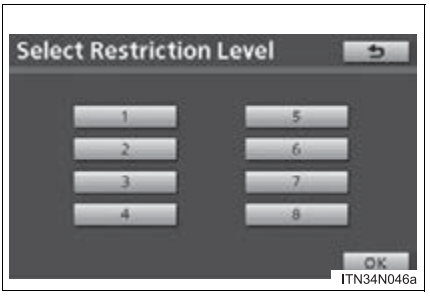


Select a restriction level (1-8), and press ENT . The smaller the level number, the stricter the age limit.

: returns to the previous screen

## Setting the display mode

### Display size

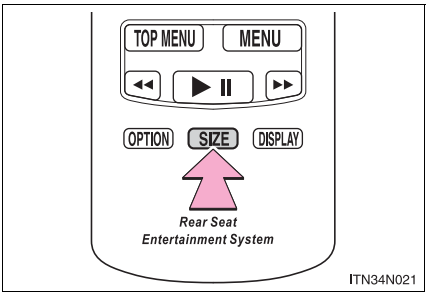


Single screen mode:

Pressing SIZE changes the display modes sequentially as follows:

Normal → Wide → Super wide → Ultra wide → Ultra zoom

Split screen mode:

Pressing SIZE changes the display mode sequentially as follows:

Normal/Normal → Wide/Normal → Wide/Wide → Normal/Wide

### Display type

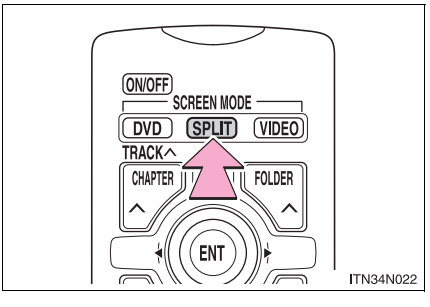


Pressing SPLIT changes the display type sequentially as follows:

left side - DVD, right side - VIDEO → left side - VIDEO, right side - DVD

Press DVD or VIDEO to display either screen with single screen mode.

### ■Returning to the previous screen

Select and press

.

### ■To initialize the password

Press ◀ on the remote controller or unit ten times when the screen to enter the personal code is displayed.

### ■When changing the display size

- When using this product, you can select from various display modes. The picture quality can be affected if you select any mode different from the original. (Example: viewing original normal picture [4:3] on a wide display mode [16:9] may distort the picture image)
- Video may appear grainy when viewed in Superwide, Ultrawide and Ultrazoom mode.
- Please note that using this system for the purpose of commercial or public viewing may result in infringement of rights of the copyright owner and/or author of that program/picture/software under copyright protection laws.

### Language code list

| Code | Language |
|---|---|
| 0514 | English |
| 0618 | French |
| 0405 | German |
| 0920 | Italian |
| 0519 | Spanish |
| 2608 | Chinese |
| 1412 | Dutch |
| 1620 | Portuguese |
| 1922 | Swedish |
| 1821 | Russian |
| 1115 | Korean |
| 0512 | Greek |
| 0101 | Afar |
| 0102 | Abkhazian |
| 0106 | Afrikaans |
| 0113 | Amharic |
| 0118 | Arabic |
| 0119 | Assamese |
| 0125 | Aymara |
| 0126 | Azerbaijani |
| 0201 | Bashkir |
| 0205 | Byelorussian |
| 0207 | Bulgarian |

| Code | Language |
|---|---|
| 0208 | Bihari |
| 0209 | Bislama |
| 0214 | Bengali |
| 0215 | Tibetan |
| 0218 | Breton |
| 0301 | Catalan |
| 0315 | Corsican |
| 0319 | Czech |
| 0325 | Welsh |
| 0401 | Danish |
| 0426 | Bhutani |
| 0515 | Esperanto |
| 0520 | Estonian |
| 0521 | Basque |
| 0601 | Persian |
| 0609 | Finnish |
| 0610 | Fiji |
| 0615 | Faroese |
| 0625 | Frisian |
| 0701 | Irish |
| 0704 | Scots-Gaelic |
| 0712 | Galician |
| 0714 | Guarani |

| Code | Language |
|---|---|
| 0721 | Gujarati |
| 0801 | Hausa |
| 0809 | Hindi |
| 0818 | Croatian |
| 0821 | Hungarian |
| 0825 | Armenian |
| 0901 | Interlingua |
| 0905 | Interlingue |
| 0911 | Inupiak |
| 0914 | Indonesian |
| 0919 | Icelandic |
| 0923 | Hebrew |
| 1001 | Japanese |
| 1009 | Yiddish |
| 1023 | Javanese |
| 1101 | Georgian |
| 1111 | Kazakh |
| 1112 | Greenlandic |
| 1113 | Cambodian |
| 1114 | Kannada |
| 1119 | Kashmiri |
| 1121 | Kurdish |
| 1125 | Kirghiz |
| 1201 | Latin |
| 1214 | Lingala |
| 1215 | Laothian |
| 1220 | Lithuanian |
| 1222 | Latvian |
| 1307 | Malagasy |
| 1309 | Maori |

| Code | Language |
|---|---|
| 1311 | Macedonian |
| 1312 | Malayalam |
| 1314 | Mongolian |
| 1315 | Moldavian |
| 1318 | Marathi |
| 1319 | Malay |
| 1320 | Maltese |
| 1325 | Burmese |
| 1401 | Nauru |
| 1405 | Nepali |
| 1415 | Norwegian |
| 1503 | Occitan |
| 1513 | (Afan) Oromo |
| 1518 | Oriya |
| 1601 | Punjabi |
| 1612 | Polish |
| 1619 | Pashto, Pushto |
| 1721 | Quechua |
| 1813 | Rhaeto-Romance |
| 1814 | Kirundi |
| 1815 | Romanian |
| 1823 | Kinyarwanda |
| 1901 | Sanskrit |
| 1904 | Sindhi |
| 1907 | Sangho |
| 1908 | Serbo-Croatian |
| 1909 | Sinhalese |
| 1911 | Slovak |
| 1912 | Slovenian |
| 1913 | Samoan |

| Code | Language |
|---|---|
| 1914 | Shona |
| 1915 | Somali |
| 1917 | Albanian |
| 1918 | Serbian |
| 1919 | Siswati |
| 1920 | Sesotho |
| 1921 | Sundanese |
| 1923 | Swahili |
| 2001 | Tamil |
| 2005 | Telugu |
| 2007 | Tajik |
| 2008 | Thai |
| 2009 | Tigrinya |
| 2011 | Turkmen |
| 2012 | Tagalog |

| Code | Language |
|---|---|
| 2014 | Setswana |
| 2015 | Tonga |
| 2018 | Turkish |
| 2019 | Tsonga |
| 2020 | Tatar |
| 2023 | Twi |
| 2111 | Ukrainian |
| 2118 | Urdu |
| 2126 | Uzbek |
| 2209 | Vietnamese |
| 2215 | Volapük |
| 2315 | Wolof |
| 2408 | Xhosa |
| 2515 | Yoruba |
| 2621 | Zulu |

# Hands-free phone system (for cellular phone) features*

**The hands-free system is a function that allows you to use your cellular phone without touching it.**

**This system supports Bluetooth®, which allows you to make or receive calls without using cables to connect a cellular phone to the system, and without operating the cellular phone.**

**With navigation system**

Owners of models equipped with a navigation system should refer to the “NAVIGATION SYSTEM OWNER’S MANUAL”.

**Without navigation system**

## ■ Hands-free system quick guide

STEP 1 Setting a cellular phone. (→P. 493)

STEP 2 Adding an entry to the phonebook (Up to 20 names can be stored). (→P. 517)

STEP 3 Dialing by inputting a name. (→P. 503)

*: If equipped

| Title | Page |
|---|---|
| Using the hands-free phone system<br>■ Operating the system using a voice command<br>■ Using the hands-free phone system for the first time<br>■ Menu list of the hands-free phone system | P. 493 |
| Making a phone call<br>■ Dialing by inputting a number<br>■ Dialing by inputting a name<br>■ Speed dialing<br>■ When receiving a phone call<br>■ Transferring a call<br>■ Using the call history memory | P. 502 |
| Setting a cellular phone<br>■ Registering a cellular phone<br>■ Selecting the cellular phone to be used<br>■ Changing a registered name<br>■ Listing the registered cellular phone<br>■ Deleting a cellular phone<br>■ Changing the passkey<br>■ Turning the hands-free phone automatic connection on/off | P. 507 |
| Security and system setup<br>■ Setting or changing the PIN<br>■ Locking or unlocking the phone book<br>■ Setting voice guidance volume<br>■ Initialization | P. 512 |
| Using the phone book<br>■ Adding a new phone number<br>■ Setting speed dials<br>■ Changing a registered name<br>■ Deleting registered data<br>■ Deleting speed dials<br>■ Listing the registered data | P. 517 |

### ■Conditions under which the system will not operate

- If using a mobile phone that does not support Bluetooth®
- If the mobile phone is switched off
- If you are outside service range
- If the mobile phone is not connected
- If the mobile phone's battery is low
- If the mobile phone is behind the seat or in the glove box or console box
- If metal is covering or touching the phone

### ■When using the hands-free system

- The audio system and voice guidance are muted when making a call.
- If both parties speak at the same time, it may be difficult to hear.
- If the incoming call volume is overly loud, an echo may be heard.
- Try to face toward the microphone as much as possible when speaking.
- In the following circumstances, it may be difficult to hear the other party:
  - When driving on unpaved roads
  - When driving at high speeds
  - When a window is open
  - When the air conditioning is blowing directly on the microphone
  - When the air conditioning is set to high

### ■When transferring ownership of the vehicle

Be sure to initialize the system to prevent personal data from being improperly accessed.

## ■ About Bluetooth®

Bluetooth is a registered trademark of Bluetooth SIG. Inc.

## ■ Compatible models

Compatible with HFP (Hands Free Profile) Ver. 1.5 and OPP (Object Push Profile) Ver. 1.1.
If your cellular phone does not support HFP, you cannot enter the Bluetooth® phone. If your cellular phone supports OPP alone, you cannot use the Bluetooth® phone.

## ■ Certification for the hands-free phone system

FCC ID: AJDK025
IC ID: 775E-K025
MADE IN THAILAND

This device complies with Part 15 of the FCC Rules and RSS-Gen of IC Rules. Operation is subject to the following two conditions: (1) This device may not cause harmful interference, and (2) This device must accept any interference received, including interference that may cause undesired operation.

CAUTION

**FCC WARNING**

Changes or modifications not expressly approved by the party responsible for compliance could void the user's authority to operate the equipment.

Radio Frequency Radiation Exposure. This equipment complies with FCC/IC radiation exposure limits set forth for uncontrolled equipment and meets the FCC radio frequency (RF) Exposure Guidelines in Supplement C to OET65 and RSS-102 of the IC radio frequency (RF) Exposure rules. This equipment has very low levels of RF energy that it deemed to comply without maximum permissive exposure evaluation (MPE). But it is desirable that it should be installed and operated with at least 7.9 in. (20 cm) and more between the radiator and person's body (excluding extremities: hands, wrists, feet and ankles).

This transmitter must not be co-located or operated in conjunction with any other antenna or transmitter.

**Caution while driving**

Do not use a cellular phone, or connect the Bluetooth® phone.

NOTICE

**To prevent damage to a cellular phone**

Do not leave a cellular phone in the vehicle. The temperature inside may become high resulting in damage to the phone.

# Using the hands-free phone system (for cellular phone)*

## ■ Audio unit

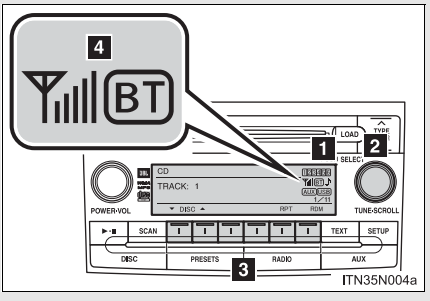


**1** Displays such items as messages, name, and phone number

Lower-case characters and special characters, such as an umlaut, cannot be displayed.

**2** Selects items such as menu or number

Turn: Selects an item

Press: Inputs the selected item

**3** Selects speed dials

**4** Bluetooth® connection condition and reception level

If “BT” is not displayed, the hands-free phone system cannot be used.



*: If equipped

## Steering wheel telephone switches

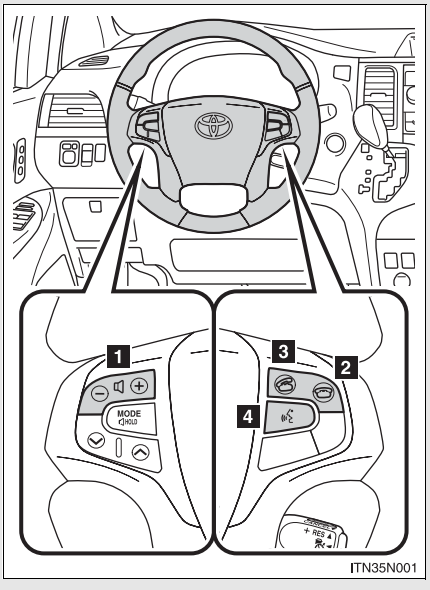

ITN35N001

1 Volume

The voice guidance volume cannot be adjusted using this button.

2 Hands-free phone system off/ends a call/refuses a call

3 Hands-free phone system on/starts a call

4 Press: Voice command system on
Press and hold: Voice command system off

## Microphone

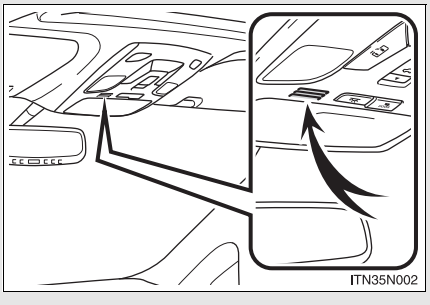
ITN35N002

## Operating the system using a voice command

By following voice guidance instructions output from the speaker, voice commands can be given to allow for operation of the hands-free phone system without checking the display or operating

.

### Operation procedure when using a voice command

Press the talk switch and follow voice guidance instructions.

### Auxiliary commands when using a voice command

The following auxiliary commands can be used when operating the system using a voice command:

Cancel: Exits the hands-free phone system
Repeat: Repeats the previous voice guidance instruction
Go back: Returns to the previous procedure
Help: Reads aloud the function summary if a help comment is registered for the selected function

## Using the hands-free phone system for the first time

Before using the hands-free phone system, it is necessary to register a cellular phone in the system. The phone registration mode will be entered automatically when starting the system with no cellular phone registered. Follow the procedure below to register a cellular phone:

STEP 1 Press off-hook switch or talk switch.

The introductory guidance and phone name registration instructions are heard.

STEP 2 Select “Pair Phone” using a voice command or

.

STEP 3 Register a phone name by either of the following methods.

a. Select “Record Name” using

, and say a name to be registered.

b. Press the talk switch and say a name to be registered.

A voice guidance instruction to confirm the input is heard.

STEP 4 Select “Confirm” using a voice command or

.

**Registration to the hands-free phone system only**

STEP 5 Select “Phone Only” using a voice command or TUNE·SCROLL .

**Registration to the hands-free phone system and Bluetooth® audio system at the same time**

STEP 5 Select “Internal Audio (Int, Audio)” using a voice command or TUNE·SCROLL .

STEP 6 Select “Confirm” by using a voice command or TUNE·SCROLL .

A passkey is displayed and heard, and a voice guidance instruction for inputting the passkey into the cellular phone is heard.

STEP 7 Input the passkey into the cellular phone.

Refer to the manual that comes with the cellular phone for the operation of the phone.

Guidance for registration completion is heard.

## Menu list of the hands-free phone system

### Normal operation

| First menu | Second menu | Third menu | Operation detail |
|---|---|---|---|
| “Callback” | - | - | Dialing a number stored in the incoming call history memory |
| “Redial” | - | - | Dialing a number stored in the outgoing call history memory |
| “Dial by number” | - | - | Dialing by inputting a number |
| “Dial by name” | - | - | Dialing by inputting a name registered in the phone book |
| “Phone-book” | “Add Entry” | - | Adding a new number |
| | “Change Name” | - | Changing a name in the phone book |
| | “Delete Entry” | - | Deleting the phone book data |
| | “Delete Speed Dial (Del Spd Dial)” | - | Deleting a registered speed dial |
| | “List Names” | - | Listing the phone book data |
| | “Set Speed Dial (Speed Dial)” | - | Registering a speed dial |

| First menu | Second menu | Third menu | Operation detail |
|---|---|---|---|
| “Setup” | “Security” | “Set PIN” | Setting a PIN code |
| | | “Phonebook Lock” | Locking the phone book |
| | | “Phonebook Unlock” | Unlocking the phone book |
| | “Phone Setup” | “Pair Phone” | Registering the cellular phone to be used |
| | | “Change Name” | Changing a registered name of a cellular phone |
| | | “Delete Phone” | Deleting a registered cellular phone |
| | | “List Phones” | Listing the registered cellular phones |
| | | “Select Phone” | Selecting a cellular phone to be used |
| | | “Set Passkey” | Changing the passkey |
| | | “Hands-free power” | Setting the hands-free power on/off |
| | “System Setup” | “Guidance Volume” | Setting voice guidance volume |
| | | “Device Name” | Displaying device information |
| | | “Initialize” | Initialization |

## Using a short cut key

| First menu | Second menu | Operation detail |
|---|---|---|
| “Dial XXX (name)” | - | Dialing a number registered in the phone book |
| “Dial XXX (number)” | - | Dialing the input numbers |
| “Phone book add entry” | - | Adding a new number |
| “Phone book change name” | - | Changing the name of a phone number in the phone book |
| “Phone book delete entry” | - | Deleting phone book data |
| “Phone book set speed dial” | - | Registering a speed dial |
| “Phone book delete speed dial” | - | Deleting a speed dial |
| “Phonebook” | “Phonebook Unlock” | Unlocking the phone book |
| | “Phonebook Lock” | Locking the phone book |
| “Phone book list names” | - | Listing the phone book data |

■ **Automatic adjustment of volume**

When vehicle speed is 50 mph (80 km/h) or more, the volume automatically increases. The volume returns to the previous volume setting when vehicle speed drops to 43 mph (70 km/h) or less.

■ **When using a voice command**

- For numbers, say a combination of single digits from zero to nine, # (pound), ∗ (star), and + (plus).
- Say a command correctly and clearly.

■ **The system may not recognize your voice in the following situations:**

- When driving on a rough road
- When driving at high speeds
- When air is blowing out of the vents onto the microphone
- When the air conditioning fan emits a loud noise

■ **The following cannot be performed while driving:**

- Operating the system with TUNE·SCROLL
- Registering a cellular phone to the system

■ **Changing the passkey**

→P. 511

# Making a phone call

## Making a phone call

- Dialing by inputting a number
  “Dial by number”
- Dialing by inputting a name
  “Dial by name”
- Speed dialing
- Dialing a number stored in the outgoing history memory
  “Redial”
- Dialing a number stored in the incoming history memory
  “Call back”

## Receiving a phone call

- Answering the phone
- Refusing the call

## Transferring a call

## Using the call history memory

- Dialing
- Storing data in the phone book
- Deleting

## Dialing by inputting a number

STEP 1 Press the talk switch and say “Dial by number”.

STEP 2 Press the talk switch and say the phone number.

STEP 3 Dial by one of the following methods:

a. Press the off- hook switch.

b. Press the talk switch and say “Dial”.

c. Select “Dial” using

.

## Dialing by inputting a name

STEP 1 Press the talk switch and say “Dial by name”.

STEP 2 Select a registered name to be input by either of the following methods:

a. Press the talk switch and say a registered name.

b. Press the talk switch and say “List names”. Press the talk switch while the desired name is being read aloud.

STEP 3 Dial by one of the following methods:

a. Press the off-hook switch.

b. Press the talk switch and say “Dial”.

c. Select “Dial” using

.

## Speed dialing

STEP 1 Press the off-hook switch.

STEP 2 Press the preset button in which the desired number is registered.

STEP 3 Press the off-hook switch.

## When receiving a phone call

### Answering the phone

Press the off-hook switch.

### Refusing the call

Press the on-hook switch.

## Transferring a call

A call can be transferred between the cellular phone and system while dialing or receiving a call, or during a call. Use one of the following methods:

a. Operate the cellular phone.

Refer to the manual that comes with the cellular phone for the operation of the phone.

b. Press the off-hook switch*1.

c. Press the talk switch and say “Call Transfer”*2.

*1: This operation can be performed only when transferring a call from the cellular phone to the system during a call.

*2: While the vehicle is in motion, a call cannot be transferred from the system to the cellular phone.

## Using the call history memory

Follow the procedure below to use a number stored in the call history memory:

STEP 1 Press the talk switch and say “Redial” (when using a number stored in the outgoing call history memory) or “Call back” (when using a number stored in the incoming call history memory).

STEP 2 Select the number by either of the following methods:

a. Say “Previous” or “Go back” until the desired number is displayed.

b. Select the desired number using

.

The following operations can be performed:

Dialing: Press the off-hook switch or select “Dial” using a voice command or

.

Storing the number in the phone book: Select “Store” using a voice command or

.

Deleting: Select “Delete” using a voice command or

.

### ■Call history

Up to 5 phone numbers can be stored in each of the outgoing and incoming call history memories.

### ■When talking on the phone

- Do not talk simultaneously with the other party.
- Keep the volume of the received voice down. Otherwise, voice echo will increase.

# Setting a cellular phone

**Registering a cellular phone in the hands-free phone system allows the system to function. The following functions can be used for registered cellular phones:**

## ■ Functions and operation procedures

To enter the menu for each function, follow the steps below using a voice command or

:

- Registering a cellular phone
  1. “Setup” → 2. “Phone Setup” → 3. “Pair Phone”
- Selecting the cellular phone to be used
  1. “Setup” → 2. “Phone Setup” → 3. “Select Phone”
- Changing a registered name
  1. “Setup” → 2. “Phone Setup” → 3. “Change Name”
- Listing the registered cellular phones
  1. “Setup” → 2. “Phone Setup” → 3. “List Phones”
- Deleting a cellular phone
  1. “Setup” → 2. “Phone Setup” → 3. “Delete Phone”
- Changing the passkey
  1. “Setup” → 2. “Phone Setup” → 3. “Set Passkey”
- Turning the hands-free phone automatic connection on/off
  1. “Setup” → 2. “Phone Setup” → 3. “Hands-free power”

## Registering a cellular phone

Select “Pair Phone” using a voice command or TUNE·SCROLL, and do the procedure for registering a cellular phone. (→P. 496)

## Selecting the cellular phone to be used

STEP 1 Select “Select Phone” using a voice command or TUNE·SCROLL.

**Pattern A**

STEP 2 Select the cellular phone to be used by either of the following methods, and select “Confirm” using a voice command or TUNE·SCROLL:

a. Press the talk switch and say the desired phone name.

b. Press the talk switch and say “List phones”. While the name of the desired cellular phone is being read aloud, press the talk switch.

**Pattern B**

STEP 2 Select the cellular phone to be used using TUNE·SCROLL.

## Changing a registered name

STEP 1 Select “Change Name” using a voice command or TUNE·SCROLL .

STEP 2 Select the name of the cellular phone to be changed by one of the following methods:

a. Press the talk switch and say the desired phone name, and select “Confirm” using a voice command or TUNE·SCROLL .

b. Press the talk switch and say “List phones”. While the desired phone name is being read aloud, press the talk switch.

c. Select the desired phone name using TUNE·SCROLL .

STEP 3 Press the talk switch or select “Record Name” using TUNE·SCROLL , and say a new name.

STEP 4 Select “Confirm” using a voice command or TUNE·SCROLL .

## Listing the registered cellular phones

Selecting “List Phones” using a voice command or TUNE·SCROLL causes the list of registered cellular phones to be read aloud.
When listing is complete, the system returns to “Phone Setup”.

Pressing the talk switch while the name of a cellular phone is being read selects the cellular phone, and the following functions will be available:

- Selecting a cellular phone: “Select Phone”
- Changing a registered name: “Change Name”
- Deleting a cellular phone: “Delete Phone”

## Deleting a cellular phone

STEP 1 Select “Delete Phone” using a voice command or TUNE·SCROLL .

STEP 2 Select the cellular phone to be deleted by either of the following methods and select “Confirm” using a voice command or TUNE·SCROLL :

a. Press the talk switch and say the name of the desired cellular phone.

b. Press the talk switch and say “List phones”. While the name of the desired cellular phone is being read aloud, press the talk switch.

## Changing the passkey

STEP 1 Select “Set Passkey” using a voice command or TUNE·SCROLL .

STEP 2 Press the talk switch, say a 4 to 8-digit number, and select “Confirm” using a voice command or TUNE·SCROLL .

The number should be input 1 digit at a time.

STEP 3 When the entire number to be registered as a passkey has been input, press TUNE·SCROLL once again.

### ■ Turning on the automatic connection

Select “Hands-free Power” using a voice command or TUNE·SCROLL .

Select “Turn on” using a voice command or TUNE·SCROLL .

---

### ■ The number of cellular phones that can be registered

Up to 6 cellular phones can be registered in the system.

# Security and system setup

To enter the menu of each setting, follow the steps below:

## ■ Security setting items and operation procedure

- Setting or changing the PIN (Personal Identification Number)
  1. “Setup” → 2. “Security” → 3. “Set PIN”
- Locking the phone book
  1. “Setup” → 2. “Security” → 3. “Phonebook Lock”
- Unlocking the phone book
  1. “Setup” → 2. “Security” → 3. “Phonebook Unlock”

## ■ System setup items and operation procedure

- Setting voice guidance volume
  1. “Setup” → 2. “System Setup” → 3. “Guidance Volume”
- Displaying the Bluetooth® device address and name
  1. “Setup” → 2. “System Setup” → 3. “Device Name”
- Initialization
  1. “Setup” → 2. “System Setup” → 3. “Initialize”

can only be used for system setup operation.

## Setting or changing the PIN

### ■ Setting a PIN

STEP 1 Select “Set PIN” using a voice command or TUNE·SCROLL .

STEP 2 Enter a PIN using a voice command or TUNE·SCROLL .

When using TUNE·SCROLL , input the code 1 digit at a time.

### ■ Changing the PIN

STEP 1 Select “Set PIN” using a voice command or TUNE·SCROLL .

STEP 2 Enter the registered PIN using a voice command or TUNE·SCROLL .

STEP 3 Enter a new PIN using a voice command or TUNE·SCROLL .

When using TUNE·SCROLL , input the code 1 digit at a time.

## Locking or unlocking the phone book

STEP 1 Select “Phonebook Lock (Phbk Lock)” or “Phonebook unlock (Phbk Unlock)” using a voice command or TUNE·SCROLL .

STEP 2 Input the PIN by either of the following methods and select “Confirm” using a voice command or TUNE·SCROLL :

a. Press the talk switch and say the registered PIN.

b. Input a registered PIN using TUNE·SCROLL .

## Setting voice guidance volume

STEP 1 Select “Guidance Volume” using TUNE·SCROLL .

STEP 2 Change the voice guidance volume.

To decrease the volume: Turn TUNE·SCROLL counterclockwise.

To increase the volume: Turn TUNE·SCROLL clockwise.

## Displaying the Bluetooth® device address and name

STEP 1 Select “Device Name” using TUNE·SCROLL .

STEP 2 Turn TUNE·SCROLL to display the Bluetooth® device address and name.

STEP 3 Select “Go Back” using TUNE·SCROLL to return to “System Setup”.

## Initialization

STEP 1 Select “Initialize” and then “Confirm” using TUNE·SCROLL .

STEP 2 Select “Confirm” using TUNE·SCROLL .

### Initialization

- The following data in the system can be initialized:
  - Phone book
  - Outgoing and incoming call history
  - Speed dials
  - Registered cellular phone data
  - Security code
- Once the initialization has been completed, the data cannot be restored to its original state.

### When the phone book is locked

The following functions cannot be used:

- Dialing by inputting a name
- Speed dialing
- Dialing a number stored in the call history memory
- Using the phone book

# Using the phone book

To enter the menu of each setting, follow the steps below:

- Adding a new phone number
  1. “Phonebook” → 2. “Add Entry”
- Setting speed dial
  1. “Phonebook” → 2. “Set Speed Dial (Speed Dial)”
- Changing a registered name
  1. “Phonebook” → 2. “Change Name”
- Deleting registered data
  1. “Phonebook” → 2. “Delete Entry”
- Deleting speed dial
  1. “Phonebook” → 2. “Delete Speed Dial (Del Spd Dial)”
- Listing the registered data
  1. “Phonebook” → 2. “List Names”

## Adding a new phone number

The following methods can be used to add a new phone number:

- Inputting a phone number using a voice command
- Transferring data from the cellular phone
- Inputting a phone number using

- Selecting a phone number from outgoing or incoming call history

## ■ Adding procedure

STEP 1 Select “Add Entry” using a voice command or TUNE·SCROLL .

STEP 2 Use one of the following methods to input a phone number:

**Inputting a phone number using a voice command**

STEP2-1: Select “By Voice” using a voice command or TUNE·SCROLL .

STEP2-2: Press the talk switch, say the desired number, and select “Confirm” using a voice command.

**Transferring data from the cellular phone**

STEP2-1: Select “By Phone” and then “Confirm” using a voice command or TUNE·SCROLL .

STEP2-2: Transfer the data from the cellular phone.

Refer to the manual that comes with the cellular phone for the details of transferring data.

STEP2-3: Select the data to be registered by either of the following methods:

a. Say “Previous” or “Next” until the desired data is displayed, and select “Confirm” using a voice command.

b. Select the desired data using TUNE·SCROLL .

**Inputting a phone number using** TUNE·SCROLL

STEP2-1: Select “Manual Input” using TUNE·SCROLL .

STEP2-2: Input a phone number using TUNE·SCROLL , and press TUNE·SCROLL once again.

Input the phone number 1 digit at a time.

**Selecting a phone number from outgoing or incoming call history**

STEP2-1: Select “Call History” using a voice command or TUNE·SCROLL .

STEP2-2: Select “Outgoing” or “Incoming” using a voice command or TUNE·SCROLL .

STEP2-3: Select the data to be registered by either of the following methods:

a. Say “Previous” or “Go back” until the desired data is displayed, and select “Confirm” using a voice command.

b. Select the desired data using TUNE·SCROLL .

STEP 3 Select the name to be registered by either of the following methods, and select “Confirm” using a voice command or TUNE·SCROLL :

a. Press the talk switch and say the desired name.

b. Select “Record Name” using TUNE·SCROLL , and say the desired name.

STEP 4 Select “Confirm” using a voice command or TUNE·SCROLL .

In STEP 4, selecting “Set Speed Dial (Speed Dial)” instead of “Confirm” registers the newly added phone number as a speed dial.

## Setting speed dials

STEP 1 Select “Set Speed Dial (Speed Dial)” using a voice command or TUNE·SCROLL .

STEP 2 Select the data to be registered as a speed dial by one of the following methods:

a. Press the talk switch, say desired name, and select “Confirm” using a voice command or TUNE·SCROLL .

b. Press the talk switch, and say “List names”. While the desired name is being read aloud, press the talk switch, and select “Confirm” using a voice command or TUNE·SCROLL .

c. Select the desired data using TUNE·SCROLL .

STEP 3 Select the desired preset button, and register the data into speed dial by either of the following methods:

a. Press the desired preset button, and select “Confirm” using a voice command or TUNE-SCROLL .

b. Press and hold the desired preset button.

## Changing a registered name

STEP 1 Select “Change Name” using a voice command or TUNE-SCROLL .

STEP 2 Select the name to be changed by one of the following methods.

a. Press the talk switch, say desired name, and select “Confirm” using a voice command or TUNE-SCROLL .

b. Press the talk switch, and say “List names”. While the desired name is being read aloud, press the talk switch, and select “Confirm” using a voice command or TUNE-SCROLL .

c. Select the desired name using TUNE-SCROLL .

STEP 3 Press the talk switch or select “Record Name” using TUNE·SCROLL, and say a new name.

STEP 4 Select “Confirm” using a voice command or TUNE·SCROLL.

## Deleting registered data

STEP 1 Select “Delete Entry” using a voice command or TUNE·SCROLL.

STEP 2 Select the data to be deleted by either of the following methods, and select “Confirm” using a voice command or TUNE·SCROLL:

a. Press the talk switch, and say the name of the desired phone number to be deleted.

b. Press the talk switch, say “List Names”. While the name of the desired phone number is being read aloud, press the talk switch.

c. Select the desired data using TUNE·SCROLL.

## Deleting speed dials

STEP 1 Select “Delete Speed Dial (Del Spd Dial)” using a voice command or TUNE·SCROLL.

STEP 2 Press the preset button in which the desired speed dial is registered, and select “Confirm” using a voice command or TUNE·SCROLL.

## Listing the registered data

Selecting “List names” using a voice command causes a list of the registered data to be read aloud.

When listing is complete, the system returns to “Phonebook”.
Pressing the talk switch while the desired data is being read aloud selects the data, and the following functions will be available.

- Dialing: “Dial”
- Changing a registered name: “Change Name”
- Deleting an entry: “Delete Entry”
- Setting a speed dial: “Set Speed Dial (Speed Dial)”

### Limitation of number of digits

A phone number that exceeds 24 digits cannot be registered.

# Interior lights list

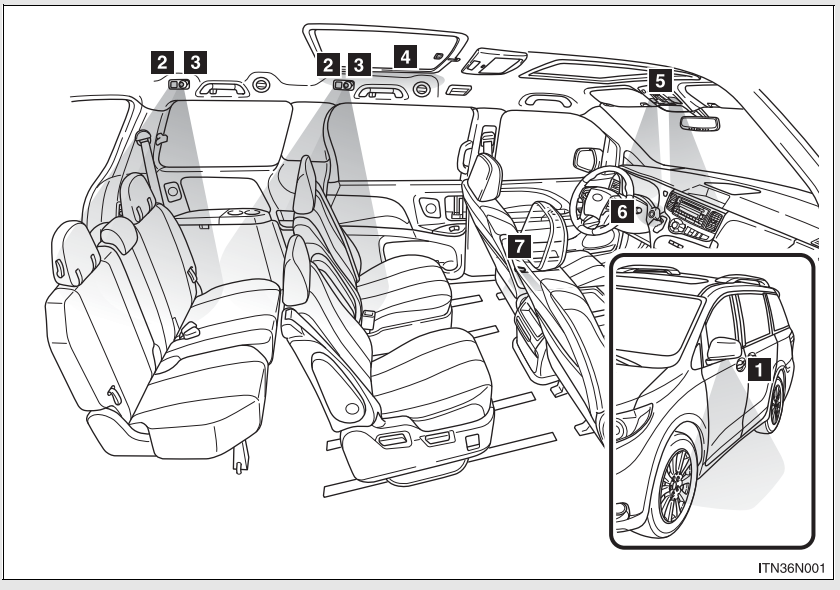


1 Outer foot lights (if equipped)

2 Rear interior light

3 Rear personal/interior lights (→P. 526)

4 Rear ceiling lights (→P. 527)

5 Front personal/interior lights (→P. 526)

6 Engine switch light (if equipped)

7 Front door courtesy lights (if equipped)

## Personal/interior light main switch (vehicles with overhead console)

### Type A

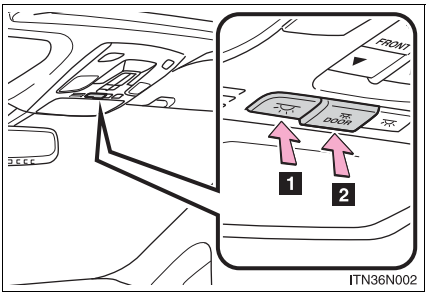


**1** On

The personal/interior lights cannot be individually turned off.

**2** Door position

The personal/interior lights and rear interior light come on when a door is opened. They turn off when the doors are closed.

### Type B

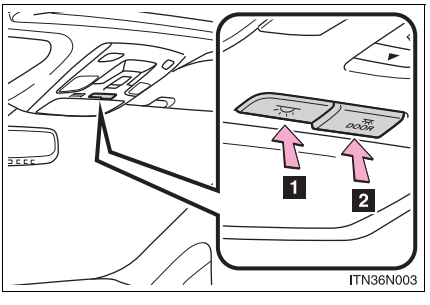

## Personal/interior lights (vehicles with overhead console)

### Front type A

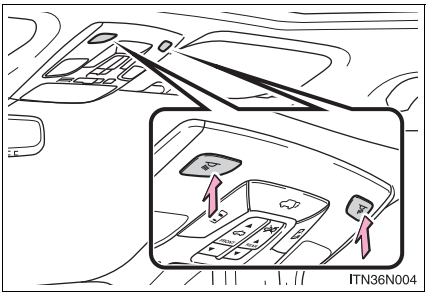


On/off

### Front type B

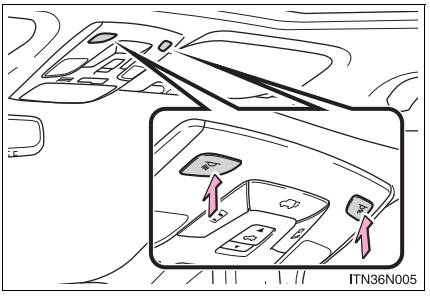


### Rear

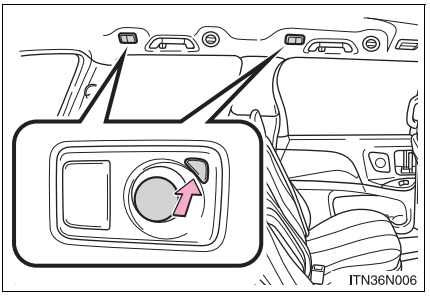


On/off

Rear personal/interior lights turn on when the personal/interior main switch is in door position.

## Personal lights (vehicles without overhead console)

### Front

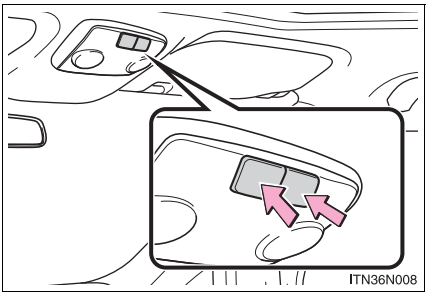


On/off

### Rear

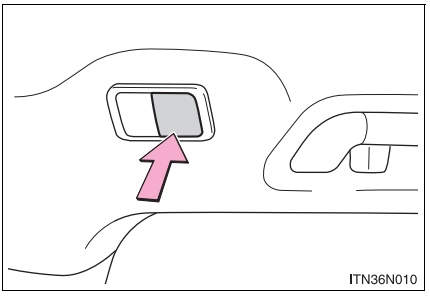


On/off

## Rear ceiling lights (if equipped)

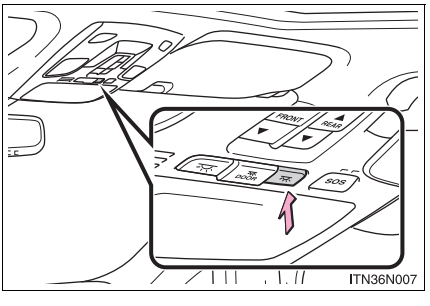


On/off

■ **Adjusting the rear personal/interior lights angle**

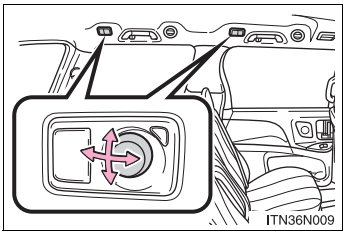


Push the edge of the light lens.

■ **Illuminated entry system (if equipped)**

**Vehicles without a smart key system**
The lights automatically turn on/off according to the engine switch position, whether the doors are locked/ unlocked, and whether the doors are open/ closed.

**Vehicles with a smart key system**
The lights automatically turn on/off according to “ENGINE START STOP” switch mode, the presence of the electronic key, whether the doors are locked/unlocked, and whether the doors are open/closed.

■ **To prevent battery discharge**

If the lights remain on when a door is not fully closed and the personal/interior light main switch is in door position, the lights will go off automatically after 30 seconds.

■ **Customization that can be configured at Toyota dealer**

Settings (e.g. the time elapsed before lights turn off) can be changed.
(Customizable features →P. 761)

NOTICE

**Rear ceiling lights**

Do not hang anything on the gap between the ceiling light cover and the ceiling or pull the ceiling light cover strongly.
Doing so may cause damage.

# List of storage features

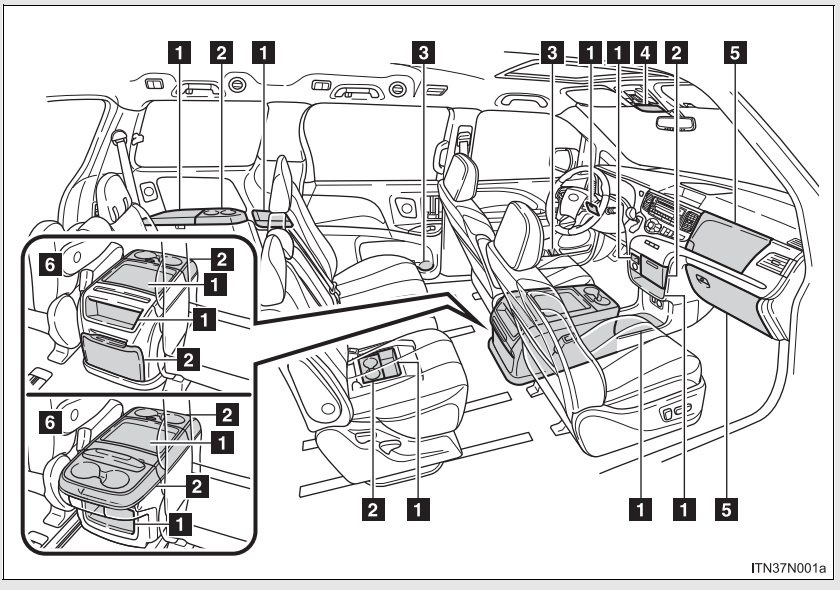


1 Auxiliary boxes

2 Cup holders

3 Bottle holders

4 Overhead console (if equipped)

5 Glove box

6 Console box (if equipped)

CAUTION

**■Items that should not be left in the storage spaces**

Do not leave glasses, lighters or spray cans in the storage spaces, as this may cause the following when cabin temperature becomes high:

- Glasses may be deformed by heat or cracked if they come into contact with other stored items.
- Lighters or spray cans may explode. If they come into contact with other stored items, the lighter may catch fire or the spray can may release gas, causing a fire hazard.

## Glove boxes

### Upper glove box

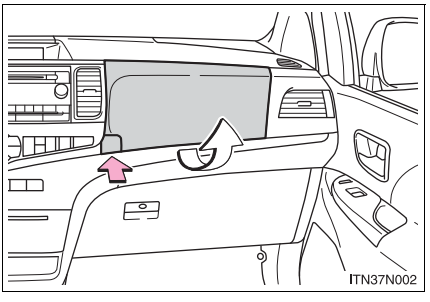


Push the button.

### Lower glove box

The lower glove box can be opened by pulling the lever and can be locked and unlocked by using the master key (vehicles without a smart key) or the mechanical key (vehicles with a smart key system).

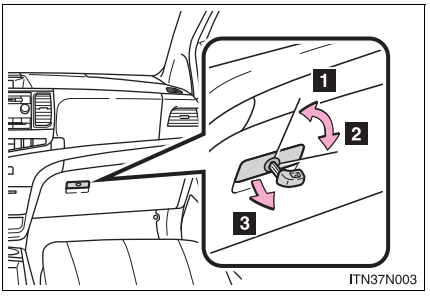


1 Unlock
2 Lock
3 Open

### Removing the separate tray (upper glove box)

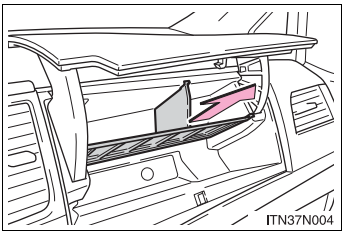


Pull out the separate tray.

**CAUTION**

**Caution while driving**

Keep the glove box closed when not in use. In the event of sudden braking, an accident may occur due to an occupant being struck by the open glove box or the items stored inside.

## Console box (if equipped)

### ■ Using the console box

**Type A**

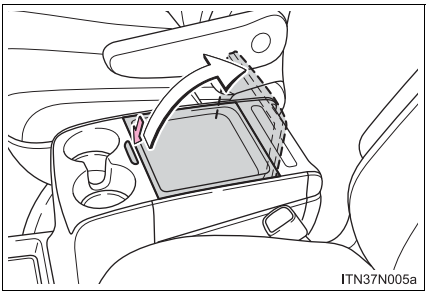


Press the tab.

**Type B**

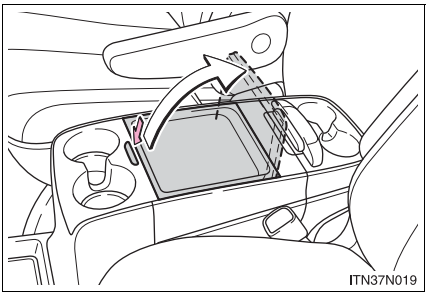


Press the tab.

## ■ Sliding the console box (type B)

**From front**

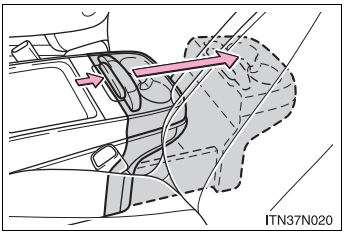


Press the tab and slide the console box.

**From rear**

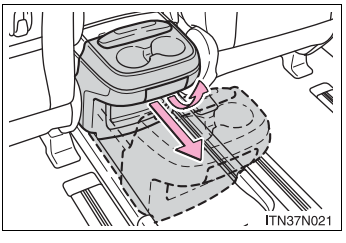


Pull up the lever and slide the console box.

## ■ Console box light

The console box light turns on when the headlight switch is on.

CAUTION

**■ Caution while driving**

Keep the console box closed when not in use. In the event of sudden braking, an accident may occur due to an occupant being struck by the open console box or the items stored inside.

**■ Console box adjustment precaution (type B)**

- Do not adjust the position of the console box while the vehicle is moving. This may cause the driver to mishandle the vehicle and may lead to an accident that results in death or serious injury.
- Be careful not to get hands or feet pinched between the console box and the rear sliding console or rear seat.
- Be careful not to allow the console box to hit any passenger while adjusting its position.
- After adjusting the console box, make sure it is securely locked in position.

## Overhead console (if equipped)

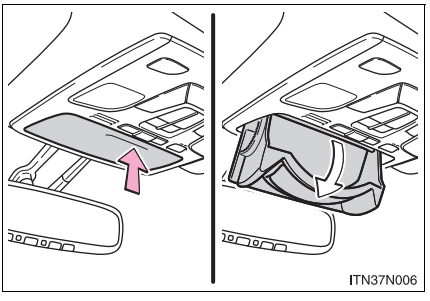


Push the lid.

The overhead console is useful for temporarily storing small items.

**CAUTION**

**While driving**

Do not leave the overhead console open.
Items may fall out and cause injury.

**Maximum storage weight**

Do not place any object heavier than 0.4 lb. (200 g) in it. The console may be opened and cause injury.

## Cup holders

### Front

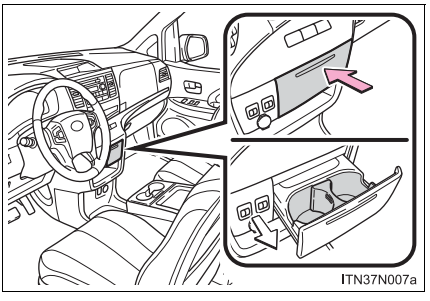


Press in and release the front cup holder.

### Console box (if equipped)

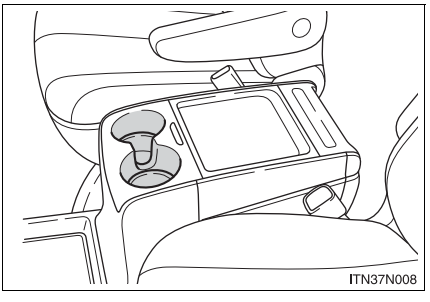


### Console box type A (if equipped)

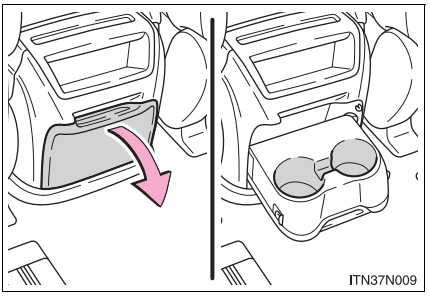


Pull the lid down.

### Console box type B (if equipped)

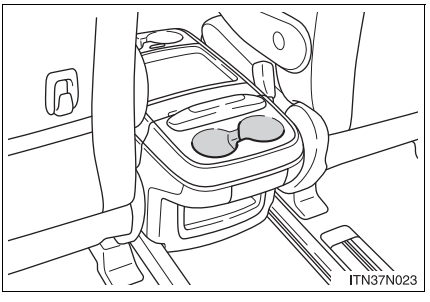


### Second center seat (if equipped)

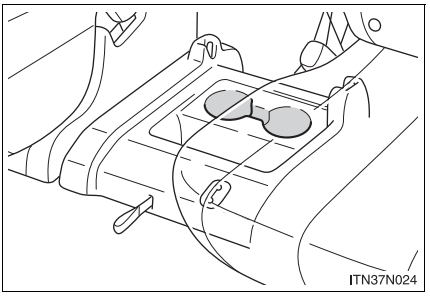


Removing the second center seat. (→P. 100)

### Rear

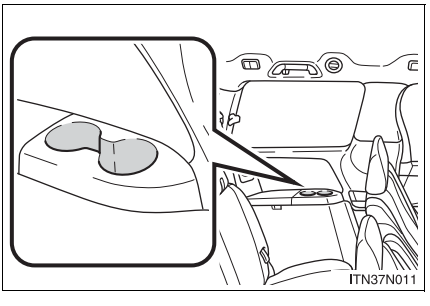

### Removing the separator (front)

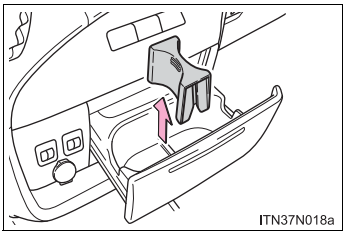


Pull the separator up.

The separator may be removed for cleaning.

### Cup holder light (console box type A and B)

The cup holder light turns on when the headlight switch is on.

**CAUTION**

**Items unsuitable for the cup holder**

Do not place anything other than cups or aluminum cans in the cup holders. Other items may be thrown out of the holders in the event of an accident or sudden braking and cause injury. If possible, cover hot drinks to prevent burns.

**When not in use (front and console box type A)**

Keep the cup holders closed. In the event of sudden braking, an accident may occur due to an occupant being struck by the open cup holders or the items stored inside.

## Bottle holders

### Type A

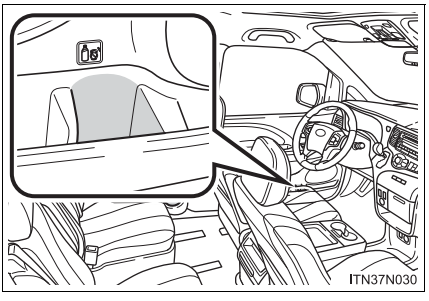


### Type B

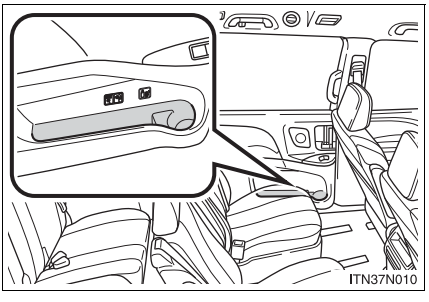

CAUTION

**■ Items unsuitable for the bottle holder**

Do not place anything other than a bottle in the bottle holders.
Other items may be thrown out of the holders in the event of an accident or sudden braking and cause injury.

NOTICE

**■ When stowing a bottle**

Put the cap on before stowing a bottle. Do not place open bottles in the bottle holders. The contents may spill.

Type B: Make sure items in the sliding door bottle holder will not interfere with the motion of the door before operating the door. Items that protrude from the bottle holder may prevent door opening or damage the vehicle.

## Auxiliary boxes

### Type A

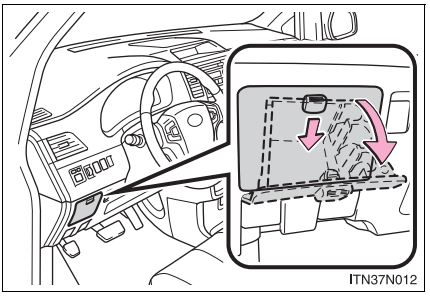


Push down the knob.

### Type B (if equipped)

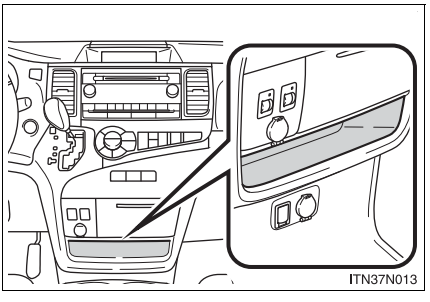


### Type C

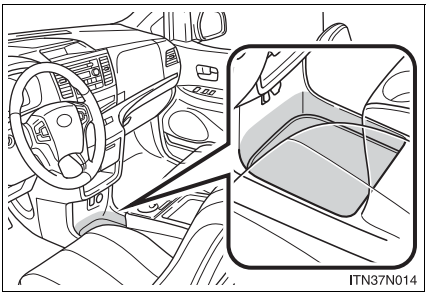

**Type D (if equipped)**

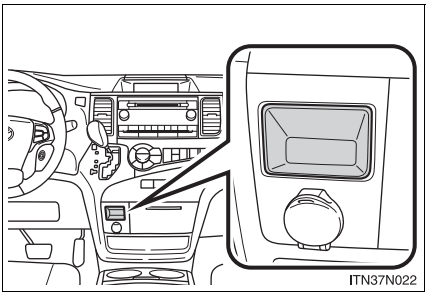


**Type E (if equipped)**

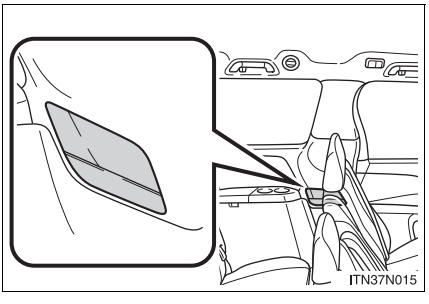


**Type F**

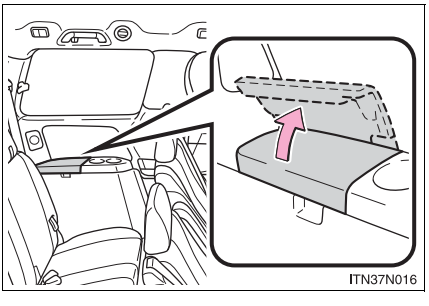


Lift the lid.

**Type G**

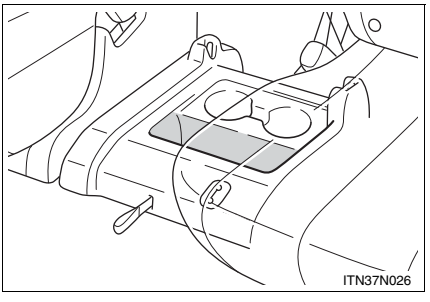


Removing the second center seat. (→P. 100)

**Type H (if equipped)**

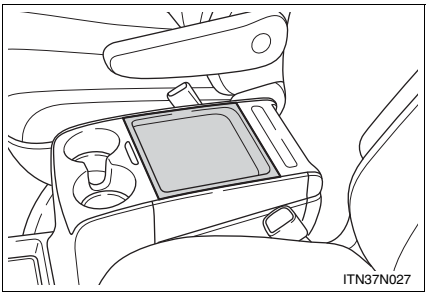


**Type I (if equipped)**

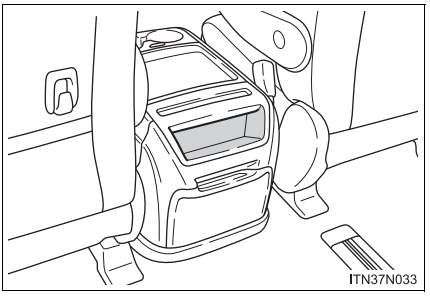

### Type J (if equipped)

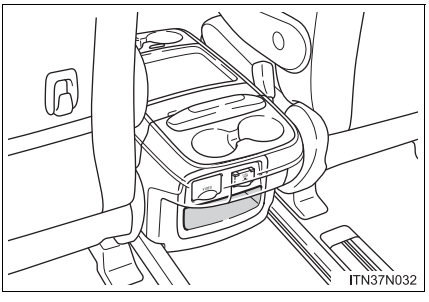


### Type K (if equipped)

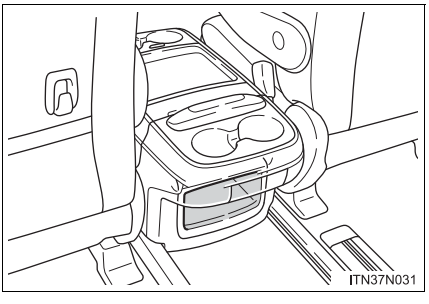

### Coin holder (type A)

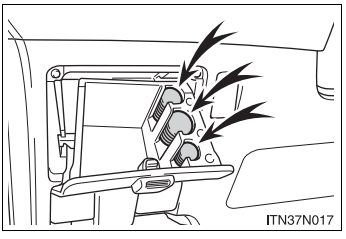


Nickels, quarters and dimes can be stored separately.

**CAUTION**

**Caution while driving (type A and F)**

Keep the auxiliary boxes closed.
Injuries may result in the event of an accident or sudden braking.

# Sun visors

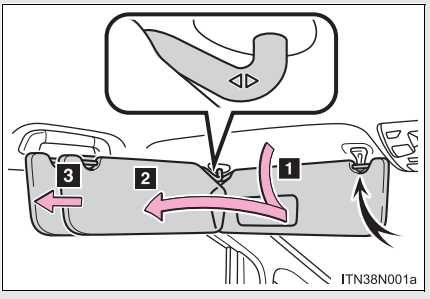


1. To set the visor in the forward position, flip it down.
2. To set the visor in the side position, flip down, unhook, and swing it to the side.
3. To use the side extender, place the visor in the side position, then slide it backward.

# Vanity mirrors

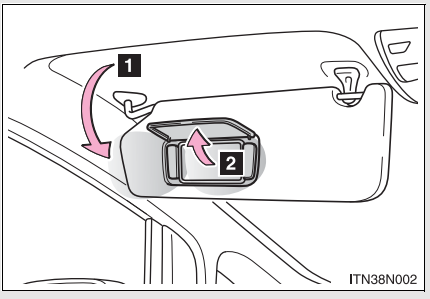


1 Flip down.

2 Open the cover.

The light turns on when the cover is opened.

NOTICE

**To prevent battery discharge**

Do not leave the vanity lights on for extended periods while the engine is off.

# Clock*

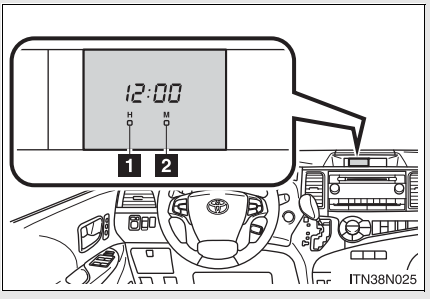


1 Adjusts the hours.

2 Adjusts the minutes.

## ■ The clock is displayed when

**Vehicles without a smart key system**
The engine switch is in the “ACC” or “ON” position.

**Vehicles with a smart key system**
The “ENGINE START STOP” switch is in ACCESSORY or IGNITION ON mode.

## ■ When disconnecting and reconnecting battery terminals

The time display will automatically be set to 1:00.

*: If equipped

# Conversation mirror*

**The conversation mirror can provide the driver and the front passenger with a view of the rear seat area without the need to turn around.**

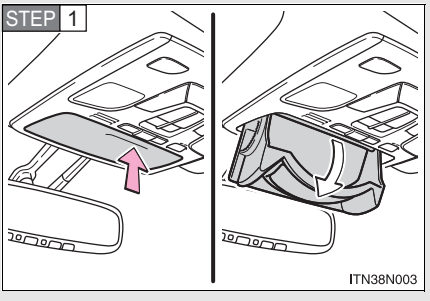


Push the lid and allow the lid to open.

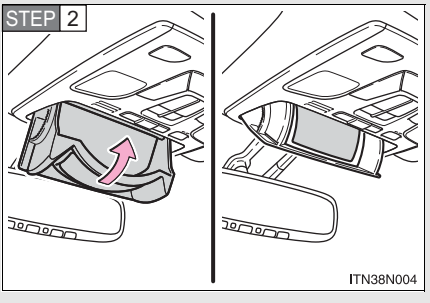


Push the lid. To first locked position.



*: If equipped

**The power outlet can be used for the following components:**

12 V: Accessories that run on less than 10 A
120 V AC: Accessories that use less than 100 W

## ■ 12 V

### Center panel type A

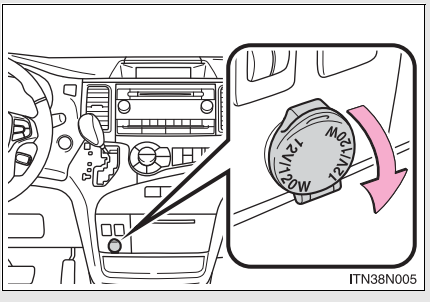


### Center panel type B

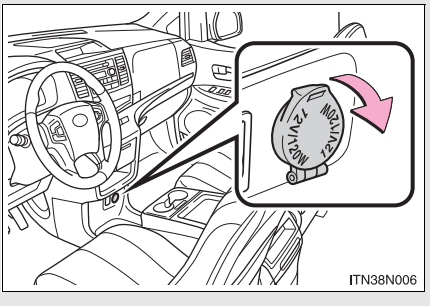

## Luggage compartment

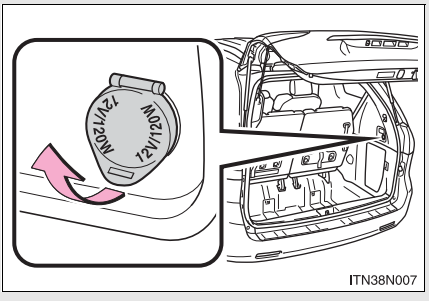

ITN38N007

### ■ 120 V AC (if equipped)

**Power outlet socket console box type A**

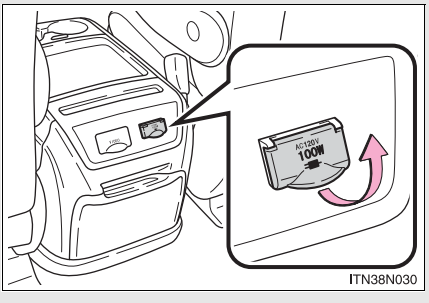

ITN38N030

**Power outlet socket console box type B**

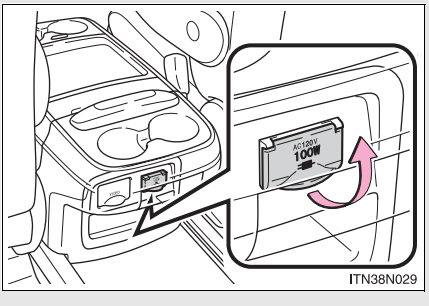

ITN38N029

## Power outlet socket luggage compartment

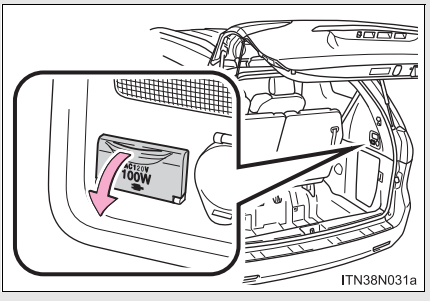


■ **The power outlet can be used when**

**Vehicles without a smart key system**

12 V: The engine switch is in the “ACC” or “ON” position.

120 V AC: The engine switch is in the “ON” position.

**Vehicles with a smart key system**

12 V: The “ENGINE START STOP” switch is in ACCESSORY or IGNITION ON mode.

120 V AC: The “ENGINE START STOP” switch is in IGNITION ON mode.

NOTICE

**To avoid damaging the power outlet**

Close the power outlet lid when the power outlet is not in use.
Foreign objects or liquids that enter the power outlet may cause a short circuit.

**To prevent blown fuse**

**12 V**

Do not use an accessory that uses more than 12 V 10 A.

**120 V AC**

Do not use a 120 V AC appliance that requires more than 100 W.

If a 120 V AC appliance that consumes more than 100 W is used, the protection circuit may cut the power supply.

**To prevent battery discharge**

Do not use the power outlet longer than necessary when the engine is not running.

**Appliances that may not operate properly (120 V AC)**

The following 120 V AC appliances may not operate properly even if their power consumption is under 100 W:

- Appliances with high initial peak wattage
- Measuring devices that process precise data
- Other appliances that require an extremely stable power supply

# Seat heaters*

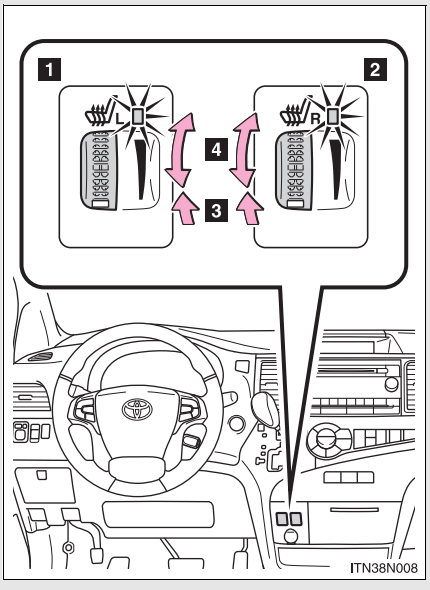


1 For driver's seat

2 For front passenger's seat

3 On

The indicator light comes on.

4 Adjusts the seat temperature

The further you move the dial upward, the warmer the seat becomes.

---

■ **The seat heaters can be used when**

**Vehicles without a smart key system**
The engine switch is in the "ON" position.

**Vehicles with a smart key system**
The "ENGINE START STOP" switch is in IGNITION ON mode.

■ **When not in use**

Move the dial fully downward. The indicator light turns off.

*: If equipped

CAUTION

■ **Burns**

- Use caution when seating the following persons in a seat with the seat heater on to avoid the possibility of burns:
  - Babies, small children, the elderly, the sick and the physically challenged
  - Persons with sensitive skin
  - Persons who are fatigued
  - Persons who have taken alcohol or drugs that induce sleep (sleeping drugs, cold remedies, etc.)
- Do not cover the seat with anything when using the seat heater.
  Using the seat heater with a blanket or cushion increases the temperature of the seat and may lead to overheating.
- Do not use the seat heater more than necessary. Doing so may cause minor burns or overheating.

NOTICE

■ **To prevent seat heater damage**

Do not put heavy objects that have an uneven surface on the seat and do not stick sharp objects (needles, nails, etc.) into the seat.

■ **To prevent battery discharge**

Turn the seat heaters off when the engine is not running.

**Front seat**

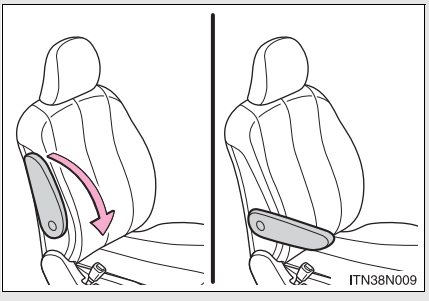


Pull the armrest down for use.

**Second seat (if equipped)**

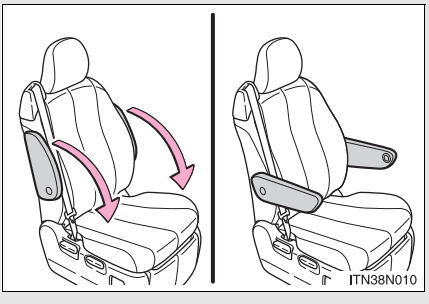


Pull the armrest down for use.

## Adjusting the armrests (if equipped)

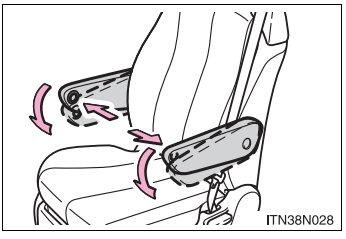


Push the armrest down while pressing the button.

NOTICE

**To prevent damage to the armrest**

Do not place too much strain on the armrest.

# Rear side sunshades*

## Rear door window

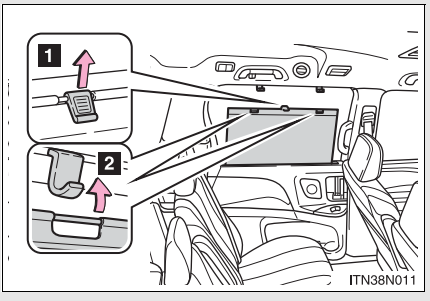


1 Pull the tab up.

2 Secure the sunshade using the hooks.

To retract the sunshade, pull the tab up slightly to unhook the sunshade, and lower the sunshade slowly.

## Rear quarter window

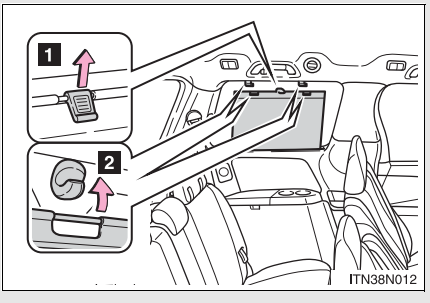


1 Pull the tab up.

2 Secure the sunshade using the hooks.

To retract the sunshade, pull the tab up slightly to unhook the sunshade, and lower the sunshade slowly.

### NOTICE

**■To ensure normal operation of the sunshade**

Observe the following precautions.

- Do not place anything where it may hinder the opening/closing of the sunshade.
- Do not place anything on the sunshade.

*: If equipped

# Grocery bag hooks

**The hooks are designed to hang things like a grocery bag.**

## Type A (front seatback) (if equipped)

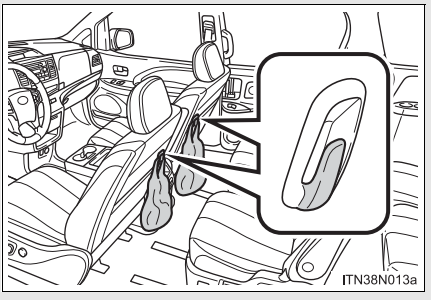


## Type B (third seat)

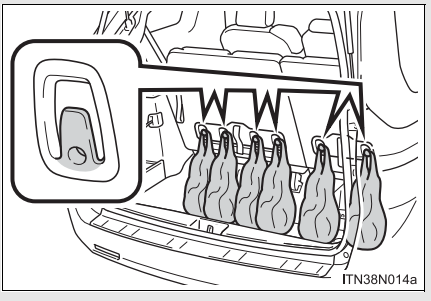


## Type C (luggage compartment)

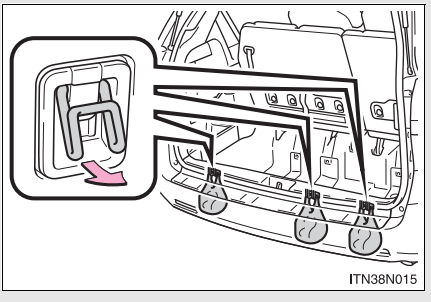


Pull the hook up.

**Type D (luggage compartment)**

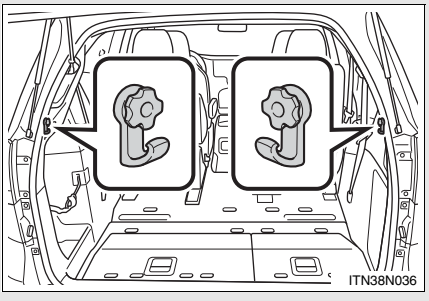


CAUTION

**When not in use (type C)**

Keep the grocery bag hook stowed.
Injuries may result in the event of an accident or sudden braking.

NOTICE

**Grocery bag hook weight capacity (type A and B)**

Do not hang any object heavier than 8.8 lb. (4 kg) on the grocery bag hook.

# Floor mat

**Use only floor mats designed specifically for vehicles of the same model and model year as your vehicle. Fix them securely in place onto the carpet.**

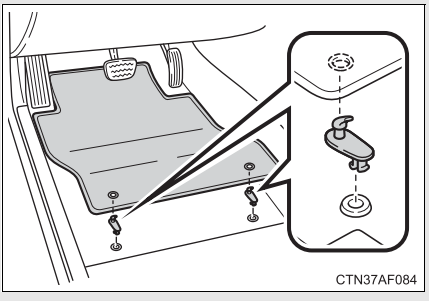


Fix the floor mat in place using the retaining hooks (clips) provided.

For details, refer to the floor mat retention clip installation instructions supplied with the clips.



## CAUTION

Observe the following precautions.
Failure to do so may cause the driver's floor mat to slip, possibly interfering with the pedals while driving. An unexpectedly high speed may result or it may become difficult to stop the vehicle, leading to a serious accident.

### ■When installing the driver's floor mat

- Do not use floor mats designed for other models or different model year vehicles, even if they are Toyota Genuine floor mats.
- Only use floor mats designed for the driver's seat.
- Always install the floor mat securely using the retaining hooks (clips) provided.
- Do not use two or more floor mats on top of each other.
- Do not place the floor mat bottom-side up or upside-down.

CAUTION

■ **Before driving**

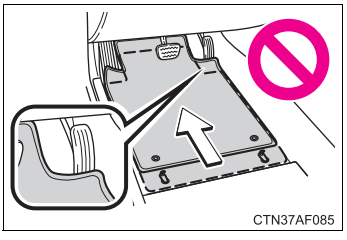


- Check that the floor mat is securely fixed in the right place with all the provided retaining hooks (clips). Be especially careful to perform this check after cleaning the floor.
- With the engine stopped and the shift lever in P, fully depress each pedal to the floor to make sure it does not interfere with the floor mat.

## ■ Cargo hooks

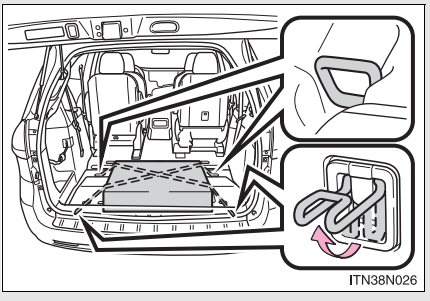


Cargo hooks are provided for securing loose items.

## ■ Cargo net hooks

**Pattern 1**

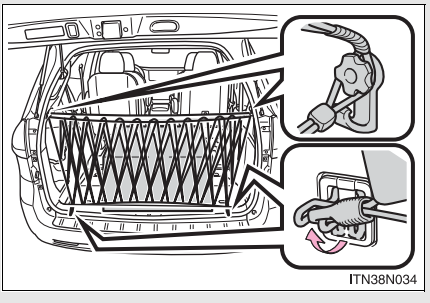


**Pattern 2**

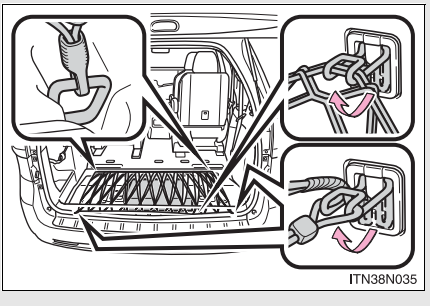

## Storage box (if equipped)

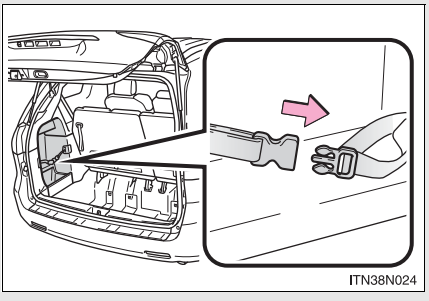


Engage the latch buckle.

**CAUTION**

**When the cargo hooks are not in use**

To avoid injury, always return the cargo hooks to their positions when they are not in use.

**NOTICE**

**To prevent damage to the cargo net hooks**

Avoid hanging things other than a cargo net on them.

# Garage door opener*

**The garage door opener can be programmed to operate garage doors, gates, entry doors, door locks, home lighting systems, security systems, and other devices.**

The garage door opener (HomeLink® Universal Transceiver) is manufactured under license from HomeLink®.

## Programming the HomeLink® (for U.S.A. owners)

The HomeLink® compatible transceiver in your vehicle has 3 buttons which can be programmed to operate 3 different devices. Refer to the programming method below appropriate for the device.

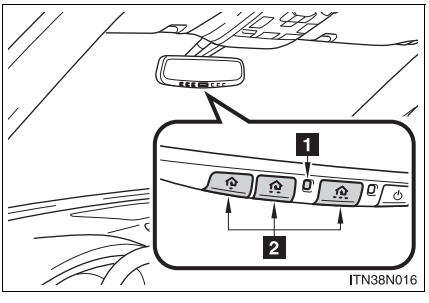


1 Indicator light

2 Buttons

### Programming the HomeLink®

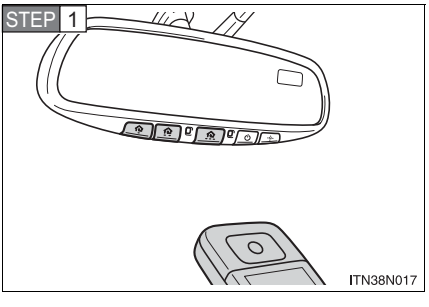


Point the remote control for the device 1 to 3 in. (25 to 75 mm) from the HomeLink® control buttons.

Keep the indicator light on the HomeLink® in view while programming.



*: If equipped

STEP 2

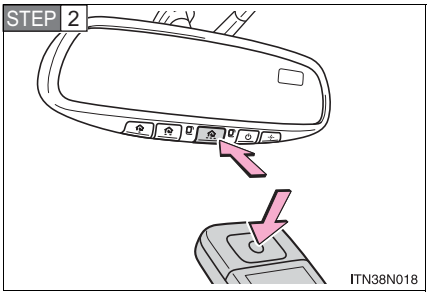


Press and hold one of the HomeLink® buttons and the transmitter button. When the HomeLink® indicator light changes from a slow to a rapid flash, you can release both buttons.

If the HomeLink® indicator light comes on but does not flash, or flashes rapidly for 2 seconds and remains lit, the HomeLink® button is already programmed. Use the other buttons or follow the “Reprogramming a HomeLink® button” instructions. (→P. 570)

STEP 3

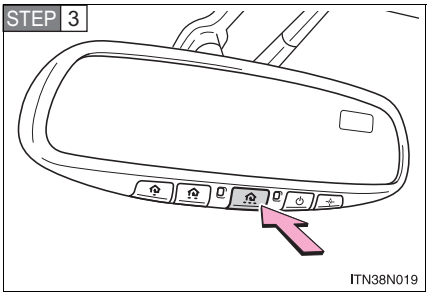


Test the operation of the HomeLink® by pressing the newly programmed button.

If programming a garage door opener, check to see if the garage door opens and closes. If the garage door does not operate, see if your garage transmitter is of the Rolling Code type. Press and hold the programmed HomeLink® button. The garage door has the rolling code feature if the indicator light (on the HomeLink®) flashes rapidly for 2 seconds and then remains lit. If your transmitter is the Rolling Code type, proceed to the heading “Programming a rolling code system”.

STEP 4 Repeat the steps above to program another device for each of the remaining HomeLink® buttons.

### ■ Programming a Rolling Code system (for U.S.A. owners)

If your device is Rolling Code equipped, follow the steps under the heading “Programming the HomeLink®” before proceeding with the steps listed below.

STEP 1 Locate the training button on the ceiling mounted garage door opener motor. The exact location and color of the button may vary by brand of garage door opener.

Refer to the operation manual supplied with the garage door opener for the location of the training button.

STEP 2 Press the training button.

Following this step, you have 30 seconds in which to initiate step 3 below.

STEP 3 Press and release the vehicle’s programmed HomeLink® button twice. The garage door may open.

If the garage door opens, the programming process is complete. If the door does not open, press and release the button a third time. This third press and release will complete the programming process by opening the garage door.

The ceiling mounted garage door opener motor should now recognize the HomeLink® transceiver and operate the garage door.

STEP 4 Repeat the steps above to program another rolling code system for any of the remaining HomeLink® buttons.

### ■ Programming an entry gate (for U.S.A. owners)/Programming all devices in the Canadian market

STEP 1 Place your transmitter 1 to 3 in. (25 to 75 mm) away from the surface of the HomeLink®.

Keep the indicator light on the HomeLink® in view while programming.

STEP 2 Press and hold the selected HomeLink® button.

STEP 3 Repeatedly press and release (cycle) the device’s remote control button for two seconds each until step 4 is complete.

STEP 4 When the indicator light on the HomeLink® compatible transceiver starts to flashing rapidly, release the buttons.

STEP 5 Test the operation of the HomeLink® by pressing the newly programmed button. Check to see if the gate/device operates correctly.

STEP 6 Repeat the steps above to program another device for each of the remaining HomeLink® buttons.

### ■ Programming other devices

To program other devices such as home security systems, home door locks or lighting, contact your authorized Toyota dealer for assistance.

### ■ Reprogramming a button

The individual HomeLink® buttons cannot be erased but can be reprogrammed. To reprogram a button, follow the programming instructions.

## Operating the HomeLink®

Press the appropriate HomeLink® button. The HomeLink® indicator light on the HomeLink® transceiver should turn on.

The HomeLink® continues to send a signal for up to 20 seconds as long as the button is pressed.

## Reprogramming a HomeLink® button

Press and hold the desired HomeLink® button. After 20 seconds, the HomeLink® indicator light will start flashing slowly. Keep pressing the HomeLink® button and press and hold the transmitter button until the HomeLink® indicator light changes from a slow to a rapid flash. Release the buttons.

## Erasing the entire HomeLink® memory (all three programs)

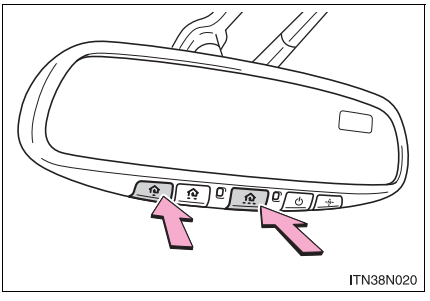


Press and hold down the 2 outside buttons for 10 seconds until the indicator light flashes.

If you sell your vehicle, be sure to erase the programs stored in the HomeLink® memory.

### Before programming

- Install a new battery in the transmitter.
- The battery side of the transmitter must be pointed away from the HomeLink®.

### Certification for the garage door opener

**For vehicles sold in the U.S.A.**

FCC ID: NZLWZLHL4

NOTE:
This device complies with Part 15 of the FCC Rules.

Operation is subject to the following two conditions: (1) this device may not cause harmful interference, and (2) this device must accept any interference received, including interference that may cause undesired operation.

FCC WARNING:
Changes or modifications not expressly approved by the party responsible for compliance could void the user's authority to operate the equipment.

**For vehicles sold in Canada**

NOTE:
Operation is subject to the following two conditions: (1) this device may not cause interference, and (2) this device must accept any interference, including interference that may cause undesired operation of the device.

### For additional programming assistance with your HomeLink® Universal Transceiver

Visit on the web at www.homelink.com or call 1-800-355-3515.

**CAUTION**

**When programming a garage door or other remote control device**

The garage door may operate, so ensure people and objects are out of danger to prevent potential harm.

**Conforming to federal safety standards**

Do not use the HomeLink® Compatible Transceiver with any garage door opener or device that lacks safety stop and reverse features as required by federal safety standards.
This includes any garage door that cannot detect an obstruction object. A door or device without these features increases the risk of death or serious injury.

# Compass*

**The compass on the trip information display indicates the direction in which the vehicle is heading.**

## ■ Operation

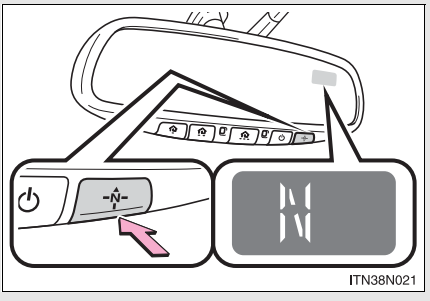


To turn the compass on or off, press the switch.

## ■ Displays and directions

| Display | Direction |
|---|---|
| N | North |
| NE | Northeast |
| E | East |
| SE | Southeast |
| S | South |
| SW | Southwest |
| W | West |
| NW | Northwest |



*: If equipped

## Calibrating the compass

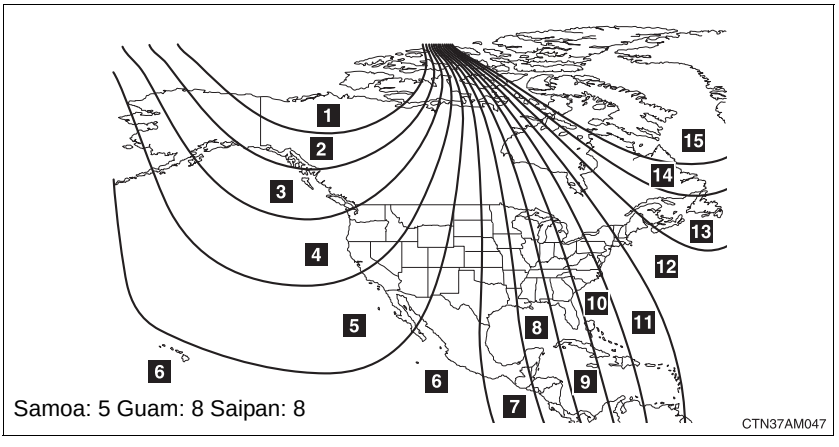


The direction display deviates from the true direction determined by the earth's magnetic field. The amount of deviation varies according to the geographic position of the vehicle.

If you cross over a map boundary shown in illustration, the compass will deviate.
To obtain higher precision or perfect calibration, refer to the following.

## ■ Deviation calibration

STEP 1 Stop the vehicle where it is safe to drive in a circle.

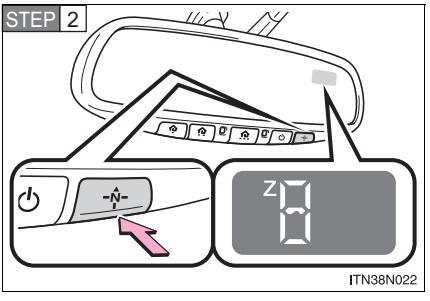


Press and hold the switch.

A number (1 to 15) appears on the compass display.

STEP 3 Referring to the map above, press the switch to select the number of the zone you are in.

If the direction is displayed several seconds after adjustment, the calibration is complete.

## ■ Circling calibration

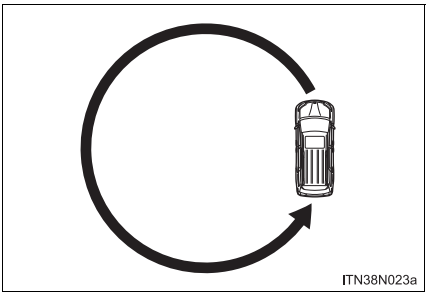


When “C” appears on the display, drive the vehicle at 5 mph (8 km/h) or less in a circle until a direction is displayed.

If there is not enough space to drive in a circle, drive around the block until the direction is displayed.

### Conditions unfavorable to correct operation

The compass may not show the correct direction in the following conditions:

- The vehicle is stopped immediately after turning.
- The vehicle is on an inclined surface.
- The vehicle is in a place where the earth's magnetic field is subject to interference by artificial magnetic fields (underground car park/parking lot, under a steel tower, between buildings, roof car park/parking lot, near an intersection, near a large vehicle, etc.).
- The vehicle has become magnetized.
  (There is a magnet or metal object near the trip information display.)
- The battery has been disconnected.
- A door is open.

**CAUTION**

**While driving the vehicle**

Do not adjust the display. Be sure to adjust the display only when the vehicle is stopped.

**When doing the circling calibration**

Be sure to secure a wide space, and watch out for people and vehicles in the neighborhood. Do not violate any local traffic rules while performing circling calibration.

NOTICE

**■To avoid a compass malfunctions**

Do not place magnets or any metal objects near the roof of the vehicle. Doing this may cause a malfunction of the compass sensor.

**■To ensure normal operation of the compass**

- Do not perform circling calibration of the compass in a place where the earth's magnetic field is subject to interference by artificial magnetic fields.
- During calibration, do not operate electric systems (moon roof, power windows, etc.) as they may interfere with the calibration.

# Safety Connect*

**Safety Connect is a subscription-based telematics service that uses Global Positioning System (GPS) data and embedded cellular technology to provide safety and security features to subscribers. Safety Connect is supported by Toyota's designated response center, which operates 24 hours per day, 7 days per week.**

**Safety Connect service is available by subscription on select, telematics hardware-equipped vehicles.**

**By using the Safety Connect service, you are agreeing to be bound by the Telematics Subscription Service Agreement and its Terms and Conditions, as in effect and amended from time to time, a current copy of which is available at Toyota.com. All use of the Safety Connect service is subject to such then-applicable Terms and Conditions.**

## ■ System components

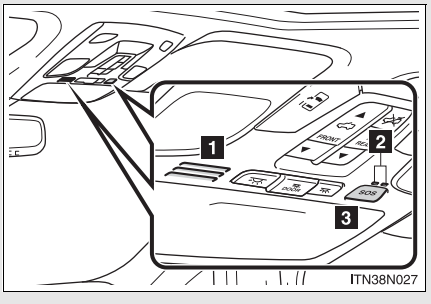


1 Microphone

2 LED light indicators

3 "SOS" button

*: If equipped

■ **Services**

Subscribers have the following Safety Connect services available:

- Automatic Collision Notification*
  Helps drivers receive necessary response from emergency service providers. (→P. 581)

  *: U.S. Patent No. 7,508,298 B2

- Stolen Vehicle Location
  Helps drivers in the event of vehicle theft. (→P. 582)

- Emergency Assistance Button (SOS)
  Connects drivers to response-center support. (→P. 582)

- Roadside Assistance
  Provides drivers various on-road assistance. (→P. 582)

■ **Subscription**

After you have signed the Telematics Subscription Service Agreement and are enrolled, you can begin receiving services.
A variety of subscription terms is available for purchase. Contact your Toyota dealer, call 1-800-331-4331, or push the “SOS” button in your vehicle for further subscription details.

### Safety Connect Services Information

- Phone calls using the vehicles Bluetooth® technology will not be possible during Safety Connect.
- Safety Connect is available beginning Fall 2009 on select Toyota models. Contact with the Safety Connect response center is dependent upon the telematics device being in operative condition, cellular connection availability, and GPS satellite signal reception, which can limit the ability to reach the response center or receive emergency service support. Enrollment and Telematics Subscription Service Agreement required. A variety of subscription terms is available; charges vary by subscription term selected.
- Safety Connect services will function in the United States, including Hawaii and Alaska, and in Canada. The services will not function outside of the United States in countries other than Canada. For details about the service, contact your Toyota dealer.
- Safety Connect services are not subject to section 255 of the Telecommunications Act and the device is not TTY compatible.

### Languages

The Safety Connect response center will offer support in multiple languages. The Safety Connect system will offer voice prompts in English and Spanish. Please indicate your language of choice when enrolling.

### When contacting the response center

You may be unable to contact the response center if the network is busy.

## Safety Connect LED light Indicators

When the engine switch is turned to the “ON” position (vehicles without a smart key system) or the “ENGINE START STOP” switch is turned to IGNITION ON mode (vehicles with a smart key system), the red indicator light comes on for 2 seconds then turns off. Afterward, the green indicator light comes on, indicating that the service is active.
The following indicator light patterns indicate specific system usage conditions:

- Green indicator light on = Active service
- Green indicator light flashing = Safety Connect call in process
- Red indicator light (except at vehicle start-up) = System malfunction (contact your Toyota dealer)
- No indicator light (off) = Safety Connect service not active

## Safety Connect services

### Automatic Collision Notification

In case of either airbag deployment or severe rear-end collision, the system is designed to automatically call the response center. The responding agent receives the vehicle’s location and attempts to speak with the vehicle occupants to assess the level of emergency. If the occupants are unable to communicate, the agent automatically treats the call as an emergency, contacts the nearest emergency services provider to describe the situation, and requests that assistance be sent to the location.

### Stolen Vehicle Location

If your vehicle is stolen, Safety Connect can work with local authorities to assist them in locating and recovering the vehicle. After filing a police report, call the Safety Connect response center at 1-800-331-4331 and follow the prompts for Safety Connect to initiate this service.

In addition to assisting law enforcement with recovery of a stolen vehicle, Safety-Connect-equipped vehicle location data may, under certain circumstances, be shared with third parties to locate your vehicle. Further information is available at Toyota.com.

### Emergency Assistance Button (“SOS”)

In the event of an emergency on the road, push the “SOS” button to reach the Safety Connect response center. The answering agent will determine your vehicle’s location, assess the emergency, and dispatch the necessary assistance required.

If you accidentally press the “SOS” button, tell the response-center agent that you are not experiencing an emergency.

### Roadside Assistance

Subscribers can press the “SOS” button to reach a Safety Connect response-center agent, who can help with a wide range of needs, such as: towing, flat tire, fuel delivery, etc. For a description of the Roadside Assistance services and their limitations, please see the Safety Connect Terms and Conditions, which are available at Toyota.com.

## Safety information for Safety Connect

Important! Read this information before using Safety Connect.

### Exposure to radio frequency signals

The Safety Connect system installed in your vehicle is a low-power radio transmitter and receiver. It receives and also sends out radio frequency (RF) signals.

In August 1996, the Federal Communications Commission (FCC) adopted RF exposure guidelines with safety levels for mobile wireless phones. Those guidelines are consistent with the safety standards previously set by the following U.S. and international standards bodies.

- ANSI (American National Standards Institute) C95.1 [1992]
- NCRP (National Council on Radiation Protection and Measurement) Report 86 [1986]
- ICNIRP (International Commission on Non-Ionizing Radiation Protection) [1996]

Those standards were based on comprehensive and periodic evaluations of the relevant scientific literature. Over 120 scientists, engineers, and physicians from universities, and government health agencies and industries reviewed the available body of research to develop the ANSI Standard (C95.1).

The design of Safety Connect complies with the FCC guidelines in addition to those standards.

## License

Licensed by QUALCOMM Incorporated under one or more of the following United States Patents and/or their counterparts in other nations:

4,901,307 5,490,165 5,056,109 5,504,773 5,101,501
5,506,865 5,109,390 5,511,073 5,228,054 5,535,239
5,267,261 5,544,196 5,267,262 5,568,483 5,337,338
5,600,754 5,414,796 5,657,420 5,416,797 5,659,569
5,710,784 5,778,338

## Certification for Safety Connect

FCC ID: O9EGTM1
FCC ID: O6Y-CDMRF101

NOTE:
This device complies with Part 15 of the FCC Rules. Operation is subject to the following two conditions: (1) This device may not cause harmful interference,
and (2) this device must accept any interference received, including interference that may cause undesired operation.

FCC WARNING:
Changes or modifications not expressly approved by the party responsible for compliance could void the user’s authority to operate the equipment.

# Maintenance and care

# 4


**4-1. Maintenance and care**

Cleaning and protecting the vehicle exterior..... 586

Cleaning and protecting the vehicle interior..... 590

**4-2. Maintenance**

Maintenance requirements..... 593

General maintenance..... 595

Emission inspection and maintenance (I/M) programs..... 599

**4-3. Do-it-yourself maintenance**

Do-it-yourself service precautions ..... 600

Hood ..... 604

Positioning a floor jack..... 606

Engine compartment..... 608

Tires ..... 626

Tire inflation pressure ..... 636

Wheels ..... 640

Air conditioning filter..... 642

Wireless remote control/electronic key battery..... 645

Checking and replacing fuses..... 648

Light bulbs..... 660

# Cleaning and protecting the vehicle exterior

**Perform the following to protect the vehicle and maintain it in prime condition:**

- Working from top to bottom, liberally apply water to the vehicle body, wheel wells and underside of the vehicle to remove any dirt and dust.
- Wash the vehicle body using a sponge or soft cloth, such as a chamois.
- For hard-to-remove marks, use car wash soap and rinse thoroughly with water.
- Wipe away any water.
- Wax the vehicle when the waterproof coating deteriorates.

  If water does not bead on a clean surface, apply wax when the vehicle body is cool.

---

## ■ Automatic car washes

- Before washing the vehicle:
  - Fold the mirrors.
  - Turn off the power back door system. (if equipped)
  - Turn off the power sliding door system. (if equipped)
    Make sure to re-install the antenna and extend the mirrors before driving.
- Brushes used in automatic car washes may scratch the vehicle surface and harm your vehicle's paint.

## ■ High pressure car washes

- Do not allow the nozzles of the car wash to come within close proximity of the windows.
- Before using car wash, check that the fuel filler door on your vehicle is closed properly.

### Aluminum wheels

- Remove any dirt immediately by using a neutral detergent. Do not use hard brushes or abrasive cleaners. Do not use strong or harsh chemical cleaners.
  Use the same mild detergent and wax as used on the paint.
- Do not use detergent on the wheels when they are hot, for example after driving for long distance in the hot weather.
- Wash detergent from the wheels immediately after use.

### Bumpers and side moldings

Do not scrub with abrasive cleaners.

### Notes for vehicles with a smart key system (if equipped)

- If the door handle becomes wet while the electronic key is within the effective range, the door may lock and unlock repeatedly. Place the key in a position 6 ft. (2 m) or more separate from the vehicle while the vehicle is being washed. (Take care to ensure that the key is not stolen.)
- If the electronic key is inside the vehicle and a door handle becomes wet during a car wash, a message may be shown on the multi-information display and a buzzer will sound outside the vehicle. To turn off the alarm, lock all the doors.

CAUTION

**When washing the vehicle**

Do not apply water to the inside of the engine compartment. Doing so may cause the electrical components etc. to catch fire.

**Precautions regarding the exhaust pipe**

Exhaust gasses cause the exhaust pipe to become quite hot.

When washing the vehicle, be careful not to touch the pipe until it has cooled sufficiently, as touching a hot exhaust pipe can cause burns.

NOTICE

**To prevent paint deterioration and corrosion on the body and components (aluminum wheels etc.)**

- Wash the vehicle immediately in the following cases:
  - After driving near the sea coast
  - After driving on salted roads
  - If coal tar or tree sap is present on the paint surface
  - If you see dead insects, insect droppings or bird droppings on the paint
  - After driving in an area contaminated with soot, oily smoke, mine dust, iron powder or chemical substances
  - If the vehicle becomes heavily soiled in dust or mud
  - If liquids such as benzene and gasoline are spilled on the paint surface
- If the paint is chipped or scratched, have it repaired immediately.
- To prevent the wheels from corroding, remove any dirt and store in a place with low humidity when storing wheels.

NOTICE

■ **Cleaning the exterior lights**

- Wash carefully. Do not use organic substances or scrub with a hard brush. This may damage the surface of the lights.
- Do not apply wax on the surfaces of the lights.
  Wax may cause damage to the lenses.

■ **Detachable antenna installation and removal precautions**

- Before driving, ensure that the antenna is installed.
- When the antenna is removed, such as before entering an automatic car wash, make sure to store it in a suitable place so as not to lose it. Also, before driving, make sure to reinstall the antenna in its original position.

■ **When using an automatic car wash (vehicles with rain-sensing windshield wipers)**

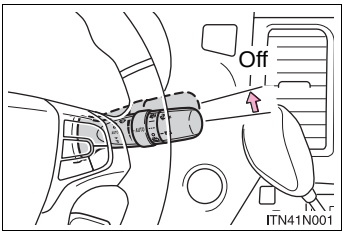


Set the wiper switch to the off position. If the wiper switch is in “AUTO”, the wipers may operate and the wiper blades may be damaged.

# Cleaning and protecting the vehicle interior

**The following procedures will help protect your vehicle's interior and keep it in top condition:**

## Protecting the vehicle interior

Remove dirt and dust using a vacuum cleaner. Wipe dirty surfaces with a cloth dampened with lukewarm water.

## Cleaning the leather areas

- Remove dirt and dust using a vacuum cleaner.
- Wipe off any excess dirt and dust with a soft cloth dampened with diluted detergent.

  Use a diluted water solution of approximately 5 % neutral wool detergent.
- Wring out any excess water from the cloth and thoroughly wipe off all remaining traces of detergent.
- Wipe the surface with a dry, soft cloth to remove any remaining moisture. Allow the leather to dry in a shaded and ventilated area.

## Cleaning the synthetic leather areas

- Remove loose dirt using a vacuum cleaner.
- Apply a mild soap solution to the synthetic leather using a sponge or soft cloth.
- Allow the solution to soak in for a few minutes. Remove the dirt and wipe off the solution with a clean, damp cloth.

### Caring for leather areas

Toyota recommends cleaning the interior of the vehicle at least twice a year to maintain the quality of the vehicle's interior.

### Shampooing the carpets

There are several commercial foaming-type cleaners available. Use a sponge or brush to apply the foam. Rub in overlapping circles. Do not use water. Wipe dirty surfaces and let them dry. Excellent results are obtained by keeping the carpet as dry as possible.

### Seat belts

Clean with mild soap and lukewarm water using a cloth or sponge. Also check the belts periodically for excessive wear, fraying or cuts.

**CAUTION**

### Water in the vehicle

- Do not splash or spill liquid in the vehicle.
  Doing so may cause electrical components etc. to malfunction or catch fire.
- Do not get any of the SRS components or wiring in the vehicle interior wet. (→P. 160)

  An electrical malfunction may cause the airbags to deploy or not function properly, resulting in death or serious injury.

### Cleaning the interior (especially instrument panel)

Do not use polish wax or polish cleaner. The instrument panel may reflect off the windshield, obstructing the driver's view and leading to an accident, resulting in death or serious injury.

NOTICE

■ **Cleaning detergents**

- Do not use the following types of detergent, as they may discolor the vehicle interior or cause streaks or damage to painted surfaces:
  - Non-seat portions: Organic substances such as benzene or gasoline, alkaline or acidic solutions, dye, and bleach
  - Seats: Alkaline or acidic solutions, such as thinner, benzene, and alcohol
- Do not use polish wax or polish cleaner. The instrument panel's or other interior part's painted surface may be damaged.

■ **Preventing damage to leather surfaces**

Observe the following precautions to avoid damage to and deterioration of leather surfaces.

- Remove any dust or dirt from leather surfaces immediately.
- Do not expose the vehicle to direct sunlight for extended periods of time. Park the vehicle in the shade, especially during summer.
- Do not place items made of vinyl, plastic, or containing wax on the upholstery, as they may stick to the leather surface if the vehicle interior heats up significantly.

■ **Water on the floor**

Do not wash the vehicle floor with water.
Vehicle systems such as the audio system may be damaged if water comes into contact with electrical components such as the audio system above or under the floor of the vehicle. Water may also cause the body to rust.

■ **Cleaning the inside of the rear window and the rear quarter windows**

- Do not use glass cleaner to clean the rear window and the rear quarter windows, as this may cause damage to the rear window defogger heater wires or print type antenna (if equipped). Use a cloth dampened with lukewarm water to gently wipe the windows clean. Wipe the windows in strokes running parallel to the heater wires or print type antenna (if equipped).
- Be careful not to scratch or damage the heater wires or print type antenna (if equipped).

# Maintenance requirements

**To ensure safe and economical driving, day-to-day care and regular maintenance are essential. It is the owner's responsibility to perform regular checks. Toyota recommends performing the following maintenance:**

## General maintenance

General maintenance should be performed on a daily basis. This can be done by yourself or by a Toyota dealer.

## Scheduled maintenance

Scheduled maintenance should be performed at specified intervals according to the maintenance schedule.

For details about maintenance items and schedules, refer to the "Scheduled Maintenance Guide" or "Owner's Manual Supplement".

## Do-it-yourself maintenance

You can perform some maintenance procedures by yourself. Please be aware that do-it-yourself maintenance may affect warranty coverage.

The use of Toyota Repair Manuals is recommended.

For details about warranty coverage, see the separate "Owner's Warranty Information Booklet" or "Owner's Manual Supplement".

---

## Repair and replacement

It is recommended that genuine Toyota parts be used for repairs to ensure performance of each system. If non-Toyota parts are used in replacement or if a repair shop other than a Toyota dealer performs repairs, confirm the warranty coverage.

### Allow inspection and repairs to be performed by a Toyota dealer

- Toyota technicians are well-trained specialists and are kept up to date with the latest service information. They are well informed about the operations of all systems on your vehicle.
- Keep a copy of the repair order. It proves that the maintenance that has been performed is under warranty coverage. If any problem should arise while your vehicle is under warranty, your Toyota dealer will promptly take care of it.

**CAUTION**

### If your vehicle is not properly maintained

Improper maintenance could result in serious damage to the vehicle and possible serious injury or death.

### Handling of the battery

- Engine exhaust, some of its constituents, and a wide variety of automobile components contain or emit chemicals known to the State of California to cause cancer and birth defects and other reproductive harm. Work in a well ventilated area.
- Oils, fuels and fluids contained in vehicles as well as waste produced by component wear contain or emit chemicals known to the State of California to cause cancer and birth defects or other reproductive harm. Avoid exposure and wash any affected area immediately.
- Battery posts, terminals and related accessories contain lead and lead compounds which are known to cause brain damage. Wash your hands after handling. (→P. 621)

# General maintenance

**Listed below are the general maintenance items that should be performed at the intervals specified in the "Owner's Warranty Information Booklet" or "Owner's Manual Supplement/Scheduled Maintenance Guide". It is recommended that any problem you notice should be brought to the attention of your Toyota dealer or qualified service shop for advice.**

## Engine compartment

| Items | Check points |
|---|---|
| Battery | Check the indicator and connections. (→P. 621) |
| Brake fluid | Is the brake fluid at the correct level? (→P. 619) |
| Engine coolant | Is the engine coolant at the correct level? (→P. 616) |
| Engine oil | Is the engine oil at the correct level? (→P. 610) |
| Exhaust system | There should not be any fumes or strange sounds. |
| Radiator/condenser | The radiator and condenser should be free from foreign objects. (→P. 618) |
| Washer fluid | Is there sufficient washer fluid? (→P. 625) |

## Vehicle interior

| Items | Check points |
|---|---|
| Accelerator pedal | • The accelerator pedal should move smoothly (without uneven pedal effort or catching). |
| Automatic transaxle “Park” mechanism | • When parked on a slope with the shift lever in P, is the vehicle securely stopped? |
| Brake pedal | • Does the brake pedal move smoothly?<br>• Does the brake pedal have appropriate clearance from the floor?<br>• Does the brake pedal have the correct amount of free play? |
| Brakes | • The vehicle should not pull to one side when the brakes are applied.<br>• The brakes should work effectively.<br>• The brake pedal should not feel spongy.<br>• The brake pedal should not get too close to the floor when the brakes are applied. |
| Head restraints | • Do the head restraints move smoothly and lock securely? |

| Items | Check points |
|---|---|
| Indicators/buzzers | • Do the indicators and buzzers function properly? |
| Lights | • Do all the lights come on?<br>• Are the headlights aimed correctly? |
| Parking brake | • Does the parking brake lever or pedal move smoothly?<br>• When parked on a slope with the parking brake on, is the vehicle securely stopped? |
| Seat belts | • Do the seat belts operate smoothly?<br>• The seat belts should not be damaged. |
| Seats | • Do the seat controls operate properly? |
| Steering wheel | • Does the steering wheel rotate smoothly?<br>• Does the steering wheel have the correct amount of free play?<br>• There should not be any strange sounds coming from the steering wheel. |

## Vehicle exterior

| Items | Check points |
|---|---|
| Doors | • Do the doors operate smoothly? |
| Engine hood | • Does the engine hood lock system work properly? |
| Fluid leaks | • There should not be any signs of fluid leakage after the vehicle has been parked. |
| Tires | • Is the tire inflation pressure correct?<br>• The tires should not be damaged or excessively worn.<br>• Have the tires been rotated according to the maintenance schedule?<br>• The wheel nuts should not be loose. |

**CAUTION**

**If the engine is running**

Turn the engine off and ensure that there is adequate ventilation before performing maintenance checks.

# Emission inspection and maintenance (I/M) programs

**Some states have vehicle emission inspection programs which include OBD (On Board Diagnostics) checks. The OBD system monitors the operation of the emission control system.**

## ■ If the malfunction indicator lamp comes on

The OBD system determines that a problem exists somewhere in the emission control system. Your vehicle may not pass the I/M test and may need to be repaired. Contact your Toyota dealer to service the vehicle.

## ■ Your vehicle may not pass the I/M test in the following situations:

● When the battery is disconnected or discharged

Readiness codes that are set during ordinary driving are erased.
Also, depending on your driving habits, the readiness codes may not be completely set.

● When the fuel tank cap is loose

The malfunction indicator lamp comes on indicating a temporary malfunction and your vehicle may not pass the I/M test.

## ■ When the malfunction indicator lamp still remains on after several driving trips

The error code in the OBD system will not be cleared unless the vehicle is driven 40 or more times.

## ■ If your vehicle does not pass the I/M test

Contact your Toyota dealer to prepare the vehicle for re-testing.

# Do-it-yourself service precautions

**If you perform maintenance yourself, be sure to follow the correct procedures as given in these sections.**

| Items | Parts and tools |
|---|---|
| Battery condition (→P. 621) | • Warm water<br>• Baking soda<br>• Grease<br>• Conventional wrench (for terminal clamp bolts) |
| Brake fluid level (→P. 619) | • FMVSS No.116 DOT 3 or SAE J1703 brake fluid<br>• Rag or paper towel<br>• Funnel (used only for adding brake fluid) |
| Engine coolant level (→P. 616) | • “Toyota Super Long Life Coolant” or similar high quality ethylene glycol based non-silicate, non-amine, non-nitrite and non-borate coolant with long-life hybrid organic acid technology.<br>For the U.S.A.:<br>“Toyota Super Long Life Coolant” is pre-mixed with 50 % coolant and 50 % deionized water.<br>For Canada:<br>“Toyota Super Long Life Coolant” is pre-mixed with 55 % coolant and 45 % deionized water.<br>• Funnel (used only for adding engine coolant) |

| Items | Parts and tools |
|---|---|
| Engine oil level (→P. 610) | • “Toyota Genuine Motor Oil” or equivalent<br>• Rag or paper towel<br>• Funnel (used only for adding engine oil) |
| Fuses (→P. 648) | • Fuse with same amperage rating as original |
| Light bulbs (→P. 660) | • Bulb with same number and wattage rating as original<br>• Phillips-head screwdriver<br>• Flathead screwdriver<br>• Wrench |
| Radiator and condenser (→P. 618) | — |
| Tire inflation pressure (→P. 636) | • Tire pressure gauge<br>• Compressed air source |
| Washer fluid (→P. 625) | • Water or washer fluid containing antifreeze (for winter use)<br>• Funnel (used only for adding water or washer fluid) |

**CAUTION**

The engine compartment contains many mechanisms and fluids that may move suddenly, become hot, or become electrically energized. To avoid death or serious injury, observe the following precautions:

**■ When working on the engine compartment:**

- Keep hands, clothing and tools away from the moving fan and engine drive belt.
- Be careful not to touch the engine, radiator, exhaust manifold, etc. right after driving as they may be hot. Oil and other fluids may also be hot.
- Do not leave anything that may burn easily, such as paper and rags, in the engine compartment.
- Do not smoke, cause sparks or expose an open flame to fuel or the battery. Fuel and battery fumes are flammable.
- Be extremely cautious when working on the battery. It contains poisonous and corrosive sulfuric acid.

**■ When working near the electric cooling fans or radiator grille**

Vehicles without a smart key system: Be sure the engine switch is off. With the engine switch in the “ON” position, the electric cooling fans may automatically start to run if the air conditioning is on and/or the coolant temperature is high. (→P. 618)

Vehicles with a smart key system: Be sure the “ENGINE START STOP” switch is off. With the “ENGINE START STOP” switch in IGNITION ON mode, the electric cooling fans may automatically start to run if the air conditioning is on and/or the coolant temperature is high. (→P. 618)

**■ Safety glasses**

Wear safety glasses to prevent flying or falling material, fluid spray, etc. from getting in your eyes.

NOTICE

**If you remove the air cleaner filter**

Driving with the air cleaner filter removed may cause excessive engine wear due to dirt in the air. Also a backfire could cause a fire in the engine compartment.

**Release the lock from the inside of the vehicle to open the hood.**

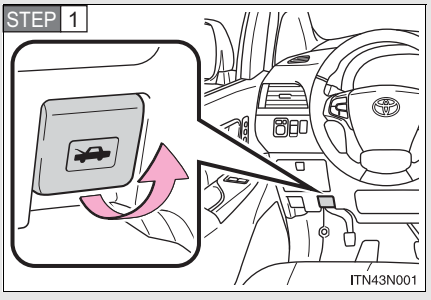


Pull the hood release lever.

The hood will pop up slightly.

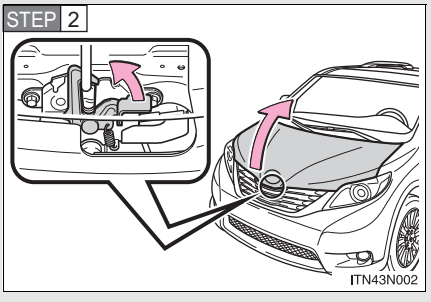


Pull up the auxiliary catch lever and lift the hood.

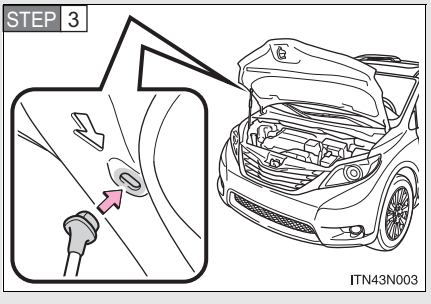


Hold the hood open by inserting the supporting rod into the slot.

CAUTION

**Pre-driving check**

Check that the hood is fully closed and locked.
If the hood is not locked properly, it may open while the vehicle is in motion and cause an accident, which may result in death or serious injury.

**After installing the support rod into the slot**

Make sure the rod supports the hood securely from falling down on to your head or body.

NOTICE

**When closing the hood**

Be sure to return the support rod to its clip before closing the hood. Closing the hood with the support rod up could cause the hood to bend.

# Positioning a floor jack

**When raising your vehicle with a floor jack, position the jack correctly. Improper placement may damage your vehicle or cause injury.**

## ■ Front

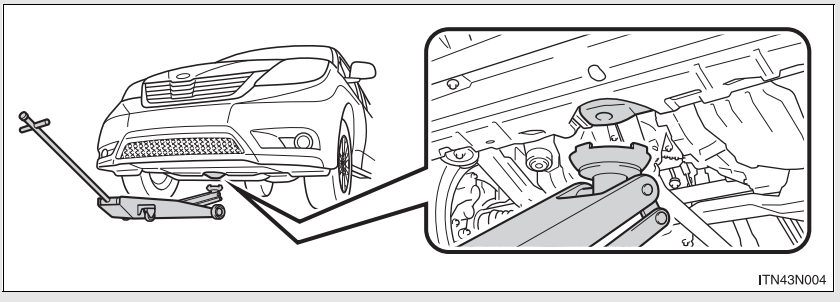


## ■ Rear

### 2WD models

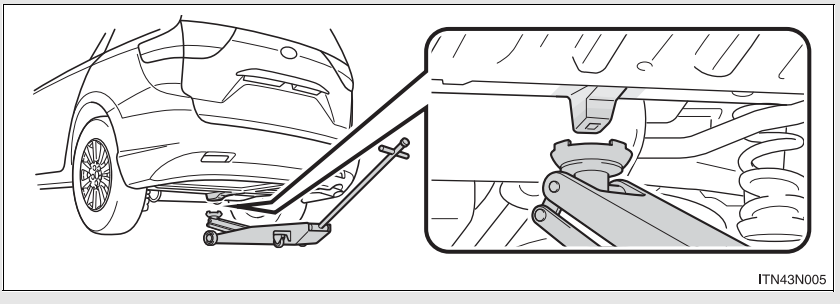


### AWD models

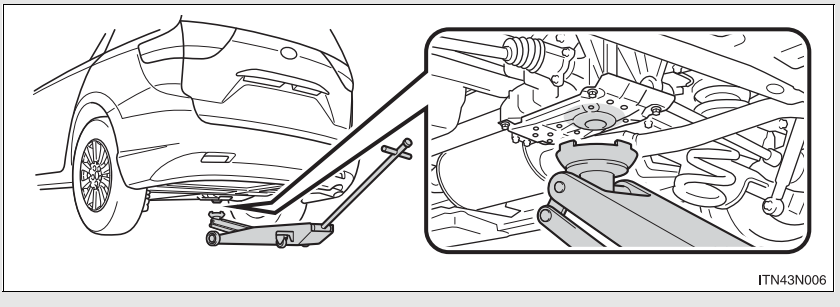

CAUTION

■ **When raising your vehicle**

Make sure to observe the following precautions to reduce the possibility of death or serious injury:

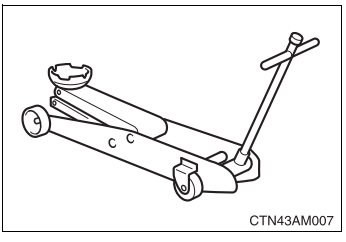


- Lift up the vehicle using a floor jack such as the one shown in the illustration.
- When using a floor jack, follow the instructions of the manual provided with the jack.
- Do not use the jack that was supplied with your vehicle.
- Do not put any part of your body underneath the vehicle when it is supported only by the floor jack.
- Always use floor jack and/or automotive jack stands on a solid, flat level surface.
- Do not start the engine while the vehicle is supported by the floor jack.
- Stop the vehicle on level, firm ground, firmly set the parking brake and shift the shift lever to P.
- Make sure to set the floor jack properly at the jack point.
  Raising the vehicle with an improperly positioned floor jack will damage the vehicle and may cause the vehicle to fall off the floor jack.
- Do not raise the vehicle while someone is in the vehicle.
- When raising the vehicle, do not place any objects on top of or underneath the floor jack.

**1AR-FE engine**

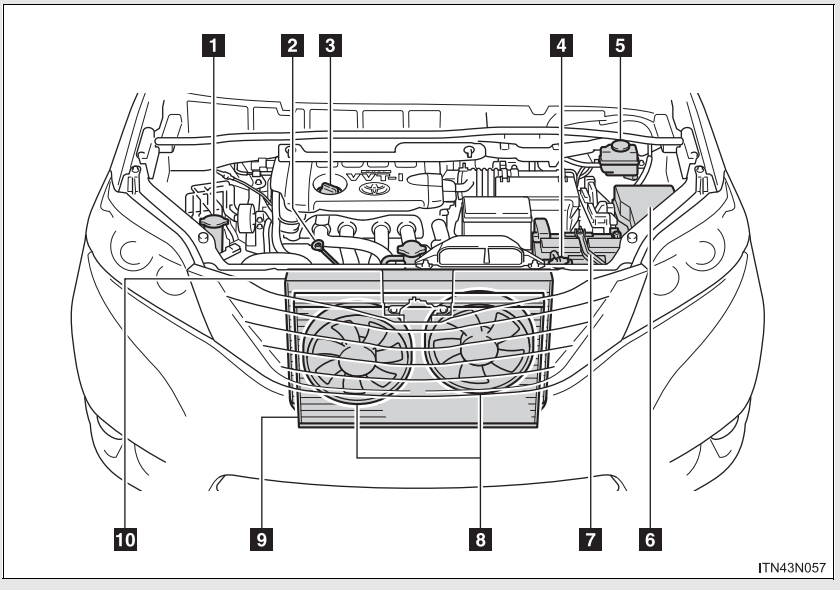


1 Washer fluid tank (→P. 625)
2 Engine oil level dipstick (→P. 610)
3 Engine oil filler cap (→P. 612)
4 Engine coolant reservoir (→P. 616)
5 Brake fluid reservoir (→P. 619)
6 Fuse box (→P. 648)
7 Battery (→P. 621)
8 Electric cooling fans
9 Condenser (→P. 618)
10 Radiator (→P. 618)

## 2GR-FE engine

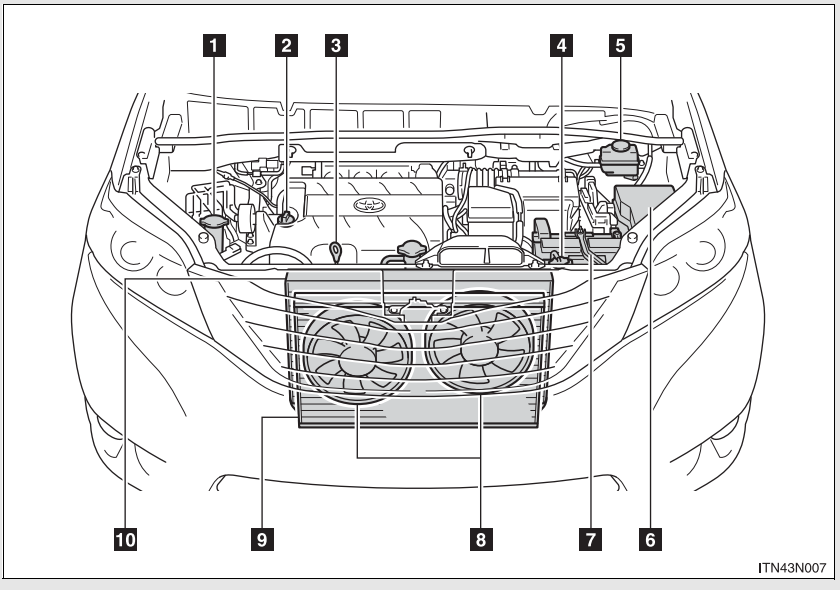


1 Washer fluid tank (→P. 625)
2 Engine oil filler cap (→P. 612)
3 Engine oil level dipstick (→P. 610)
4 Engine coolant reservoir (→P. 616)
5 Brake fluid reservoir (→P. 619)
6 Fuse box (→P. 648)
7 Battery (→P. 621)
8 Electric cooling fans
9 Condenser (→P. 618)
10 Radiator (→P. 618)

## Engine oil

With the engine at operating temperature and turned off, check the oil level on the dipstick.

### ■ Checking the engine oil

STEP 1 Park the vehicle on level ground. After turning off the engine, wait more than five minutes for the oil to drain back into the bottom of the engine.

STEP 2

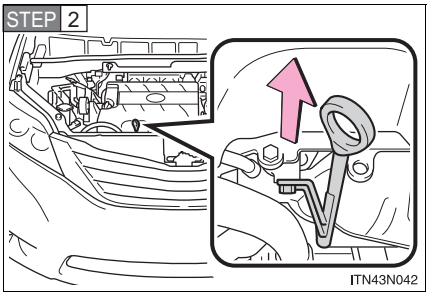


Holding a rag under the end, pull the dipstick out.

STEP 3 Wipe the dipstick clean.

STEP 4 Reinsert the dipstick fully.

STEP 5 Holding a rag under the end, pull the dipstick out and check the oil level.

STEP 6 Wipe the dipstick and reinsert it fully.

**1AR-FE engine**

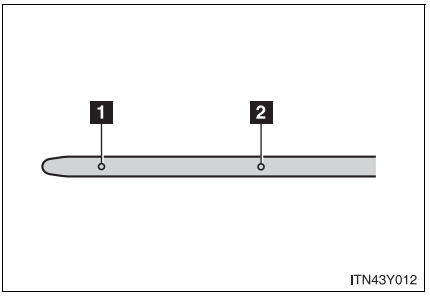


1 Low

2 Full

**2GR-FE engine**

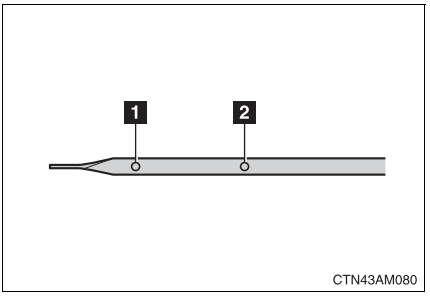

## ■ Adding engine oil

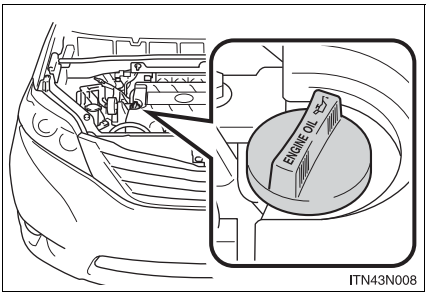


If the oil level is below or near the low level mark, add engine oil of the same type as that already in the engine.

Make sure to check the oil type and prepare the items needed before adding oil.

| | |
|---|---|
| Engine oil selection | →P. 738 |
| Oil quantity (Low→Full) | 1.6 qt. (1.5 L, 1.3 Imp. qt.) |
| Items | Clean funnel |

STEP 1 Remove the oil filler cap by turning it counterclockwise.

STEP 2 Add engine oil slowly, checking the dipstick.

STEP 3 Install the oil filler cap by turning it clockwise.

### Engine oil consumption

- The amount of engine oil consumed depends on the oil viscosity, the quality of the oil and the way the vehicle is driven.
- More oil is consumed under driving conditions such as high speeds and frequent acceleration and deceleration.
- A new engine consumes more oil.
- When judging the amount of oil consumption, keep in mind that the oil may have become diluted, making it difficult to judge the true level accurately.
- Oil consumption: Max. 1.1 qt./600 miles, 0.9 Imp.qt./600 miles (1.0 L per 1000 km)
- If your vehicle consumes more than 1.1 qt. (1.0 L, 0.9 Imp.qt.) every 600 miles (1000 km), contact your Toyota dealer.

### ■ After changing the engine oil (U.S.A. only)

The engine oil maintenance data should be reset. Perform the following procedures:

STEP 1 **Vehicles without a smart key system**
Switch the display to the trip meter A (→P. 229) and then turn the engine switch off.

**Vehicles with a smart key system**
Switch the display to the trip meter A (→P. 229) and then turn the “ENGINE START STOP” switch off.

STEP 2 **Vehicles without a smart key system**
While pressing the trip meter reset button (→P. 229), turn the engine switch to the “ON” position.

**Vehicles with a smart key system**
While pressing the trip meter reset button (→P. 229), turn the “ENGINE START STOP” switch to IGNITION ON mode.

STEP 3 **Vehicles without a multi-information display**
Continue to press and hold the button until the trip meter A displays “000000”.

**Vehicles with a multi-information display**
Continue to press and hold the button until “COMPLETE” appears on the multi-information display.

CAUTION

■ **Used engine oil**

- Used engine oil contains potentially harmful contaminants which may cause skin disorders such as inflammation and skin cancer, so care should be taken to avoid prolonged and repeated contact. To remove used engine oil from your skin, wash thoroughly with soap and water.
- Dispose of used oil and filters only in a safe and acceptable manner. Do not dispose of used oil and filters in household trash, in sewers or onto the ground. Call your Toyota dealer, service station or auto parts store for information concerning recycling or disposal.
- Do not leave used engine oil within the reach of children.

NOTICE

■ **To prevent serious engine damage**

Check the oil level on a regular basis.

■ **When replacing the engine oil**

- Be careful not to spill engine oil on the vehicle components.
- Avoid overfilling, or the engine could be damaged.
- Check the oil level on the dipstick every time you refill the vehicle.
- Be sure the engine oil filler cap is properly tightened.

## Engine coolant

The coolant level is satisfactory if it is between the “FULL” and “LOW” lines on the reservoir when the engine is cold.

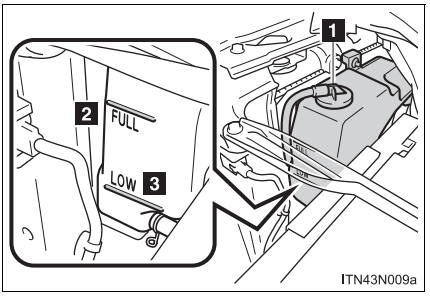


1 Reservoir cap

2 “FULL”

3 “LOW”

If the level is on or below the “LOW” line, add coolant up to the “FULL” line.

### Coolant selection

Only use “Toyota Super Long Life Coolant” or similar high quality ethylene glycol based non-silicate, non-amine, non-nitrite, and non-borate coolant with long-life hybrid organic acid technology.

U.S.A.: “Toyota Super Long Life Coolant” is a mixture of 50 % coolant and 50 % deionized water.
(Minimum temperature: -31°F [-35°C])

Canada: “Toyota Super Long Life Coolant” is a mixture of 55 % coolant and 45 % deionized water.
(Minimum temperature: -44°F [-42°C])

For more details about engine coolant, contact your Toyota dealer.

### If the coolant level drops within a short time of replenishing

Visually check the radiator, hoses, engine coolant reservoir caps drain cock and water pump.
If you cannot find a leak, have your Toyota dealer test the cap and check for leaks in the cooling system.

CAUTION

**When the engine is hot**

Do not remove the engine coolant reservoir cap.
The cooling system may be under pressure and may spray hot coolant if the cap is removed, causing burns or other injuries.

NOTICE

**When adding coolant**

Coolant is neither plain water nor straight antifreeze. The correct mixture of water and antifreeze must be used to provide proper lubrication, corrosion protection and cooling. Be sure to read the antifreeze or coolant label.

**If you spill coolant**

Be sure to wash it off with water to prevent it from damaging parts or paint.

## Radiator and condenser

Check the radiator and condenser and clear away any foreign objects.
If either of the above parts is extremely dirty or you are not sure of their condition, have your vehicle inspected by your Toyota dealer.

**CAUTION**

**When the engine is hot**

Do not touch the radiator or condenser as they may be hot and cause burns.

**When the electric cooling fan is operating**

Do not touch the engine compartment.
Vehicles without a smart key system: With the engine switch in the “ON” position, the electric cooling fans may automatically start to run if the air conditioning is on and/or the coolant temperature is high. Be sure the engine switch is in the “LOCK” position when working near the electric cooling fan or radiator grille.
Vehicles with a smart key system: With the “ENGINE START STOP” switch in IGNITION ON mode, the electric cooling fans may automatically start to run if the air conditioning is on and/or the coolant temperature is high. Be sure the “ENGINE START STOP” switch is OFF when working near the electric cooling fans or radiator grille.

## Brake fluid

### Checking fluid level

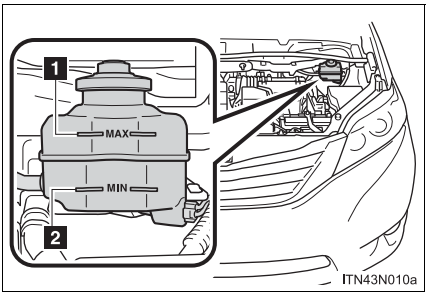


The brake fluid level should be between the “MAX” and “MIN” lines on the tank.

1 “MAX”

2 “MIN”

### Adding fluid

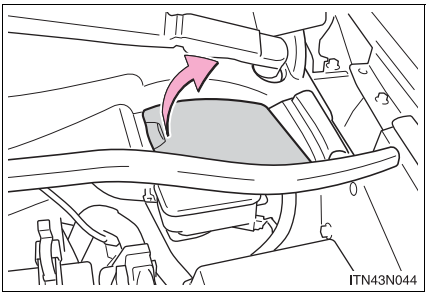


Lift the cover off.

Make sure to check the fluid type and prepare the necessary item.

| | |
|---|---|
| Fluid type | FMVSS No.116 DOT 3 or SAE J1703 brake fluid |
| Item | Clean funnel |

### Brake fluid can absorb moisture from the air

Excess moisture in the brake fluid can cause a dangerous loss of braking efficiency. Use only newly opened brake fluid.

**CAUTION**

### When filling the reservoir

Take care as brake fluid can harm your hands and eyes and damage painted surfaces.
If fluid gets on your hands or in your eyes, flush the affected area with clean water immediately.

If you still experience discomfort, see a doctor.

**NOTICE**

### If the fluid level is low or high

It is normal for the brake fluid level to go down slightly as the brake pads wear out or when the fluid level in the accumulator is high.
If the reservoir needs frequent refilling, there may be a serious problem.

## Battery

Check the battery as follows:

### Battery exterior

Make sure that the battery terminals are not corroded and that there are no loose connections, cracks, or loose clamps.

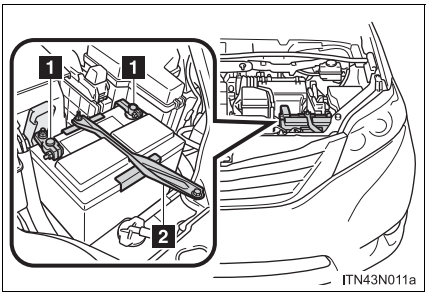


1 Terminals

2 Hold-down clamp

### Before recharging

When recharging, the battery produces hydrogen gas which is flammable and explosive. Therefore, observe the following before recharging:

- If recharging with the battery installed on the vehicle, be sure to disconnect the ground cable.
- Make sure the power switch on the charger is off when connecting and disconnecting the charger cables to the battery.

### ■ After recharging/reconnecting the battery (vehicles with a smart key system)

- Unlocking the doors using the smart key system may not be possible immediately after reconnecting the battery. If this happens, use the wireless remote control or the mechanical key to lock/unlock the doors.
- Start the engine with the “ENGINE START STOP” switch in ACCESSORY mode. The engine may not start with the “ENGINE START STOP” switch turned OFF. However, the engine will operate normally from the second attempt.
- The “ENGINE START STOP” switch mode is recorded by the vehicle. If the battery is reconnected, the vehicle will return the “ENGINE START STOP” switch mode to the status it was in before the battery was disconnected. Make sure to turn off the power before disconnecting the battery. Take extra care when connecting the battery if the “ENGINE START STOP” switch mode prior to discharge is unknown.

If the system will not start even after multiple attempts, contact your Toyota dealer.

### ■ Disconnecting the battery (vehicles with an AUTO ACCESS SEAT)

Do not disconnect the battery while operating the AUTO ACCESS SEAT. The AUTO ACCESS SEAT will become inoperable.
For details, refer to “AUTO ACCESS SEAT OWNER’S MANUAL”.

CAUTION

■ **Chemicals in the battery**

Batteries contain poisonous and corrosive sulfuric acid and may produce hydrogen gas which is flammable and explosive. To reduce the risk of death or serious injury, take the following precautions while working on or near the battery:

- Do not cause sparks by touching the battery terminals with tools.
- Do not smoke or light a match near the battery.
- Avoid contact with eyes, skin and clothes.
- Never inhale or swallow electrolyte.
- Wear protective safety glasses when working near the battery.
- Keep children away from the battery.

■ **Where to safely charge the battery**

Always charge the battery in an open area. Do not charge the battery in a garage or closed room where there is insufficient ventilation.

CAUTION

**How to recharge the battery**

Only perform a slow charge (5 A or less). The battery may explode if charged at a quicker rate.

**Emergency measures regarding electrolyte**

- If electrolyte gets in your eyes
  Flush your eyes with clean water for at least 15 minutes and get immediate medical attention. If possible, continue to apply water with a sponge or cloth while traveling to the nearest medical facility.
- If electrolyte gets on your skin
  Wash the affected area thoroughly. If you feel pain or burning, get medical attention immediately.
- If electrolyte gets on your clothes
  It can soak through clothing on to your skin. Immediately take off the clothing and follow the procedure above if necessary.
- If you accidentally swallow electrolyte
  Drink a large quantity of water or milk. Get emergency medical attention immediately.

NOTICE

**When recharging the battery**

Never recharge the battery while the engine is running. Also, be sure all accessories are turned off.

## Washer fluid

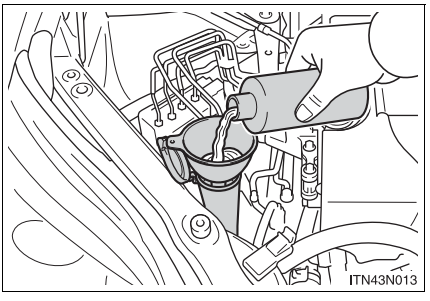


If any washer does not work or the low washer fluid warning light comes on, the washer tank may be empty. Add washer fluid.

**CAUTION**

**When refilling washer fluid**

Do not refill washer fluid when the engine is hot or running, as washer fluid contains alcohol and may catch fire if spilled on the engine etc.

**NOTICE**

**Do not use any fluid other than washer fluid**

Do not use soapy water or engine antifreeze instead of washer fluid.
Doing so may cause streaking on the vehicle's painted surfaces.

**Diluting washer fluid**

Dilute washer fluid with water as necessary.
Refer to the freezing temperatures listed on the washer fluid tank.

**Replace or rotate tires in accordance with maintenance schedules and treadwear.**

## Checking tires

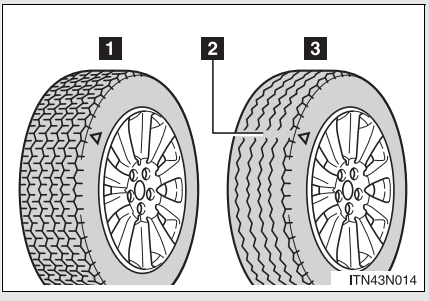


1 New tread

2 Treadwear indicator

3 Worn tread

The location of treadwear indicators is shown by the “TWI” or “△” marks, etc., molded on the sidewall of each tire.

Vehicles with compact spare tire: check spare tire condition and pressure if not rotated.

## ■ Tire rotation

**Vehicles with a spare tire of a different wheel type from the installed tires**

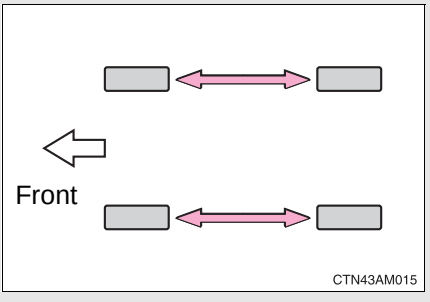


Rotate the tires in the order shown.

To equalize tire wear and extend tire life, Toyota recommends that tire rotation is carried out at the same interval as tire inspection.

## ■ Tire pressure warning system

Your vehicle is equipped with a tire pressure warning system that uses tire pressure warning valves and transmitters to detect low tire inflation pressure before serious problems arise.
(→P. 684)

Vehicles with compact spare tire: The compact spare tire is not equipped with the tire pressure warning valve and transmitters.

## Installing tire pressure warning valves and transmitters

When replacing tires or wheels, tire pressure warning valves and transmitters must also be installed.

When new tire pressure warning valves and transmitters are installed, new ID codes must be registered in the tire pressure warning computer and the tire pressure warning system must be initialized. Have tire pressure warning valve and transmitter ID codes registered by your Toyota dealer. (→P. 630)

## Initializing the tire pressure warning system

When the tire size is changed, the tire pressure warning system must be initialized.

When the tire pressure warning system is initialized, the current tire inflation pressure is set as the benchmark pressure.

### ■ How to initialize the tire pressure warning system

STEP 1 Park the vehicle in a safe place and turn the engine switch (vehicles without a smart key system) or the “ENGINE START STOP” switch (vehicles with a smart key system) off.

Initialization cannot be performed while the vehicle is moving.

STEP 2 Adjust the tire inflation pressure to the specified cold tire inflation pressure level. (→P. 743)

Make sure to adjust the tire pressure to the specified cold tire inflation pressure level. The tire pressure warning system will operate based on this pressure level.

STEP 3 Turn the engine switch to the “ON” position (vehicles without a smart key system) or “ENGINE START STOP” switch to IGNITION ON mode (vehicles with a smart key system).

STEP 4

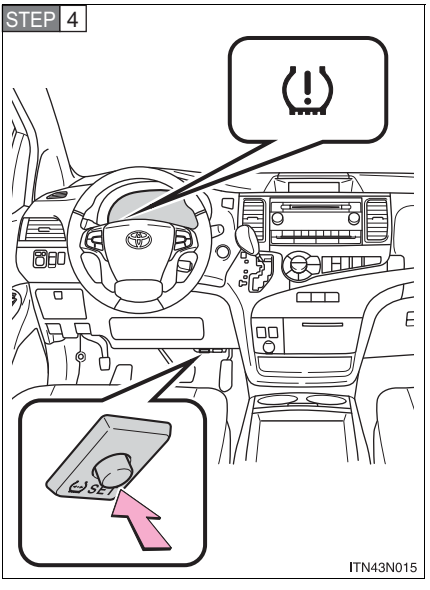


Press and hold the tire pressure warning reset button until the tire pressure warning light flashes slowly 3 times.

STEP 5 Vehicles without a smart key system: Wait for a few minutes with the engine switch in the “ON” position and then turn the engine switch to the “ACC” or “LOCK” position.
Vehicles with a smart key system: Wait for a few minutes with the “ENGINE START STOP” switch in IGNITION ON mode and then turn the “ENGINE START STOP” switch off.

## Registering ID codes

The tire pressure warning valve and transmitter is equipped with a unique ID code. When replacing a tire pressure warning valve and transmitter, it is necessary to register the ID code. Have the ID code registered by your Toyota dealer.

---

### ■When to replace your vehicle's tires

Tires should be replaced if:

- ●You have tire damage such as cuts, splits, cracks deep enough to expose the fabric, and bulges indicating internal damage
- ●A tire goes flat repeatedly or cannot be properly repaired due to the size or location of a cut or other damage

If you are not sure, consult with your Toyota dealer.

### ■Replacing tires and wheels

If the ID code of the tire pressure warning valve and transmitter is not registered, the tire pressure warning system will not work properly. After driving for about 20 minutes, the tire pressure warning light flashes for 1 minute and stays on to indicate a system malfunction.

### ■Tire life

Any tire over 6 years old must be checked by a qualified technician even if it has seldom or never been used or damage is not obvious.

### ■Routine tire inflation pressure checks

The tire pressure warning system does not replace routine tire inflation pressure checks. Make sure to check tire inflation pressure as part of your routine of daily vehicle checks.

### Maximum load of tire

Check that the number given by dividing the maximum load by 1.10 of the replacement tire is greater than 1/2 of the Gross Axle Weight Ratings (GAWR) of either the front axle or the rear axle, whichever is greater.

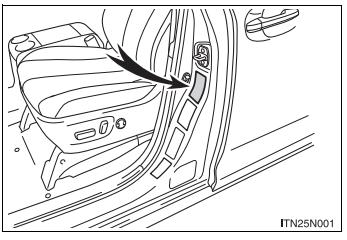


For the GAWR, see the Certification Label. For the maximum load of the tire, see the load limit at maximum cold tire inflation pressure mentioned on the sidewall of the tire. (→P. 749)

### Tire types

1 Summer tires

Summer tires are high-speed performance tires best suited to highway driving under dry conditions. Since summer tires do not have the same traction performance as snow tires, summer tires are inadequate for driving on snow-covered or icy roads. For driving on snow-covered roads or icy roads, the use of snow tires is recommended. When installing snow tires, be sure to replace all four tires.

2 All season tires

All season tires are designed to provide better traction in snow and to be adequate for driving in most winter conditions, as well as for use year round. All season tires, however, do not have adequate traction performance compared with snow tires in heavy or loose snow. Also, all season tires fall short in acceleration and handling performance compared with summer tires in highway driving.

3 Snow tires

For driving on snow-covered roads or icy roads, we recommend using snow tires. If you need snow tires, select tires of the same size, construction and load capacity as the originally installed tires. Since your vehicle has radial tires as original equipment, make sure your snow tires also have radial construction. Do not install studded tires without first checking local regulations for possible restriction. Snow tires should be installed on all wheels. (→P. 324)

### Initializing the tire pressure warning system

Initialize the system with the tire inflation pressure adjusted to the specified level.

### If the tread on snow tires wears down below 0.16 in. (4 mm)

The effectiveness of the tires as snow tires is lost.

### If you press the tire pressure warning reset switch accidentally

If initialization is performed, adjust the tire inflation pressure to the specified level and initialize the tire pressure warning system again.

### When the initialization of the tire pressure warning system has failed

Initialization can be completed in a few minutes. However, in the following cases, the settings has not been recorded and the system will not operate properly. If repeated attempts to record tire inflation pressure settings are unsuccessful, have the vehicle inspected by your Toyota dealer.

- When operating the tire pressure warning reset button, the tire pressure warning light does not flash 3 times.
- After driving for a certain period of time since the initialization has been completed, the warning light comes on after blinking for 1 minute.

## Tire pressure warning system certification

**MODEL/FCC IDs:**

**Transmitter: GQ4-32T**

**Receiver: GQ4-37R**

**IC (Canada) IDs:**

**Transmitter: 1470A-13T**

**Receiver: 1470A-9R**

**U.S.A.**

This device complies with Part 15 of the FCC Rules. Operation is subject to the following two conditions: (1) This device may not cause harmful interference, and (2) this device must accept any interference received, including interference that may cause undesired operation.

FCC WARNING:
Changes or modifications not expressly approved by the party responsible for compliance could void the user's authority to operate the equipment.

**Canada**

Operation is subject to the following two conditions: (1) this device may not cause interference, and (2) this device must accept any interference, including interference that may cause undesired operation of the device.

CAUTION

■ **When inspecting or replacing tires**

Observe the following precautions to prevent accidents. Failure to do so may cause damage to parts of the drive train, as well as dangerous handling characteristics, which may lead to an accident resulting in death or serious injury.

- Do not mix tires of different makes, models or tread patterns.
  Also, do not mix tires of remarkably different treadwear.
- Do not use tire sizes other than those recommended by Toyota.
- Do not mix differently constructed tires (radial, bias-belted or bias-ply tires).
- Do not mix summer, all season and snow tires.
- Do not use tires that have been used on another vehicle.
  Do not use tires if you do not know how they were used previously.
- Do not tow if your vehicle has a compact spare tire installed.

■ **When initializing the tire pressure warning system**

Do not operate the tire pressure warning reset switch without first adjusting the tire inflation pressure to the specified level. Otherwise, the tire pressure warning light may not come on even if the tire inflation pressure is low, or it may come on when the tire inflation pressure is actually normal.

NOTICE

■ **Repairing or replacing tires, wheels, tire pressure warning valves and transmitters and tire valve caps**

- When removing or fitting the wheels, tires or the tire pressure warning valves and transmitters, contact your Toyota dealer as the tire pressure warning valves and transmitters may be damaged if not handled correctly.
- When replacing tire valve caps, do not use tire valve caps other than those specified. The cap may become stuck.

■ **To avoid damaging the tire pressure warning valves and transmitters**

Do not use liquid sealants on flat tires.

■ **Driving on rough roads**

Take particular care when driving on roads with loose surfaces or potholes.
These conditions may cause losses in tire inflation pressure, reducing the cushioning ability of the tires. In addition, driving on rough roads may cause damage to the tires themselves, as well as the vehicle's wheels and body.

■ **If tire inflation pressure of each tire becomes low while driving**

Do not continue driving, or your tires and/or wheels may be ruined.

## Tire inflation pressure

The recommended cold tire inflation pressure and tire size are displayed on the tire and loading information label. (→P. 743)

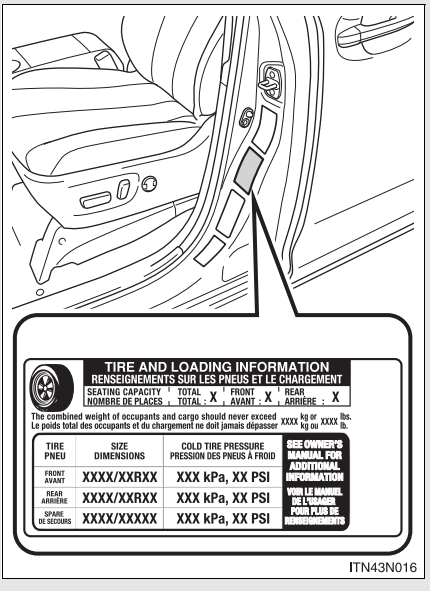

## Inspection and adjustment procedure

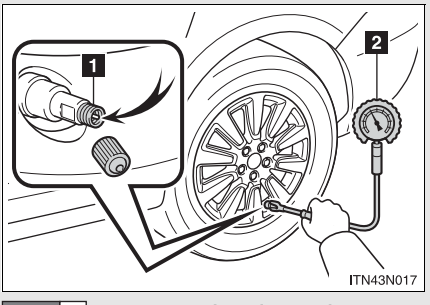


1 Tire valve

2 Tire pressure gauge

STEP 1 Remove the tire valve cap.

STEP 2 Press the tip of the tire pressure gauge onto the tire valve.

STEP 3 Read the pressure using the gauge gradations.

STEP 4 If the tire inflation pressure is not at the recommended levels, adjust the pressure.
If you add too much air, press the center of the valve to deflate.

STEP 5 After completing the tire inflation pressure measurement and adjustment, apply soapy water to the valve and check for leakage.

STEP 6 Put the tire valve cap back on.

### ■Tire inflation pressure check interval

You should check tire inflation pressure every two weeks, or at least once a month.
Do not forget to check the spare.

### ■Effects of incorrect tire inflation pressure

Driving with incorrect tire inflation pressure may result in the following:

- Reduced fuel efficiency
- Reduced driving comfort and tire life
- Reduced safety
- Damage to the drive train

If a tire needs frequent refilling, have it checked by your Toyota dealer.

### ■Instructions for checking tire inflation pressure

When checking tire inflation pressure, observe the following:

- Check only when the tires are cold.
  If your vehicle has been parked for at least 3 hours or has not been driven for more than 1 mile or 1.5 km, you will get an accurate cold tire inflation pressure reading.
- Always use a tire pressure gauge.
  The appearance of the tire can be misleading. In addition, tire inflation pressure that is even just a few pounds off can affect ride quality and handling.
- Do not reduce tire inflation pressure after driving. It is normal for tire inflation pressure to be higher after driving.
- Never exceed the vehicle capacity weight.
  Passengers and luggage weight should be placed so that the vehicle is balanced.

CAUTION

**Proper inflation is critical to save tire performance**

Keep your tires properly inflated.
Otherwise, the following conditions may occur and result in an accident causing death or serious injury.

- Excessive wear
- Uneven wear
- Poor handling
- Possibility of blowouts resulting from overheated tires
- Poor sealing of the tire bead
- Wheel deformation and/or tire separation
- A greater possibility of tire damage from road hazards

NOTICE

**When inspecting and adjusting tire inflation pressure**

Be sure to put the tire valve caps back on.
Without the valve caps, dirt or moisture could get into the valve and cause air leakage, which could result in an accident. If the caps are lost, replace them as soon as possible.

**If a wheel is bent, cracked or heavily corroded, it should be replaced.**
**Otherwise, the tire may separate from the wheel or cause a loss of handling control.**

■ **Wheel selection**

When replacing wheels, care should be taken to ensure that they are equivalent to those removed in load capacity, diameter, rim width and inset*.
Replacement wheels are available at your Toyota dealer.

*: Conventionally referred to as “offset”.

Toyota does not recommend using the following:

- Wheels of different sizes or types
- Used wheels
- Bent wheels that have been straightened

■ **Aluminum wheel precautions**

- Use only Toyota wheel nuts and wrenches designed for use with your aluminum wheels.
- When rotating, repairing or changing your tires, check that the wheel nuts are still tight after driving 1000 miles (1600 km).
- Be careful not to damage the aluminum wheels when using tire chains.
- Use only Toyota genuine balance weights or equivalent and use a plastic or rubber hammer when balancing your wheels.

### When replacing wheels

The wheels of your vehicle are equipped with tire pressure warning valves and transmitters that allow the tire pressure warning system to provide advanced warning in the event of a loss in tire inflation pressure. Whenever wheels are replaced, tire pressure warning valves and transmitters must be installed. (→P. 628)

**CAUTION**

**When replacing wheels**

- Do not use wheels that are a different size from those recommended in the Owner's Manual, as this may result in a loss of handling control.
- Never use an inner tube in a leaking wheel which is designed for a tubeless tire. Doing so may result in an accident, causing death or serious injury.

**NOTICE**

**Replacing tire pressure warning valves and transmitters**

- Because tire repair or replacement may affect the tire pressure warning valves and transmitters, make sure to have tires serviced by your Toyota dealer or other qualified service shop. In addition, make sure to purchase your tire pressure warning valves and transmitters at your Toyota dealer.
- Ensure that only genuine Toyota wheels are used on your vehicle.
  Tire pressure warning valves and transmitters may not work properly with non-genuine wheels.

**The air conditioning filter must be cleaned or changed regularly to maintain air conditioning efficiency.**

## ■ Removal method

STEP 1 Turn the engine switch (vehicles without a smart key system) or “ENGINE START STOP” switch (vehicles with a smart key system) off.

STEP 2

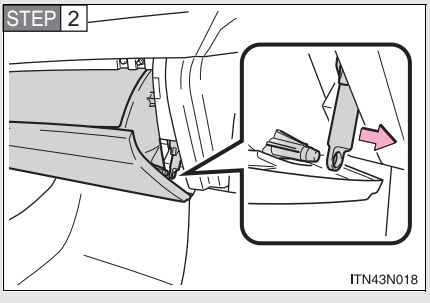


Open the glove box. Slide off the damper.

STEP 3

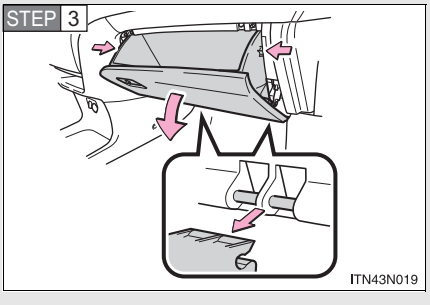


Push in each side of the glove box to disconnect the claws.

STEP 4

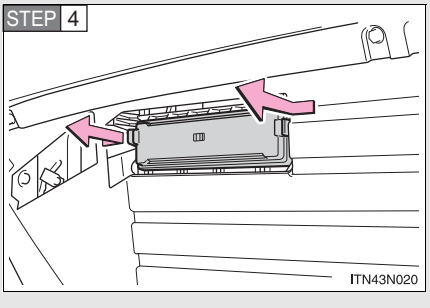


Remove the filter cover.

STEP 5

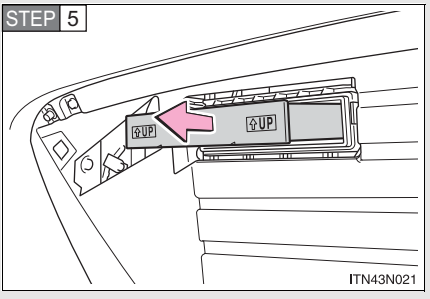


Remove the filter.

The "↑UP" marks shown on the filter should be pointing up.

## ■ Cleaning method

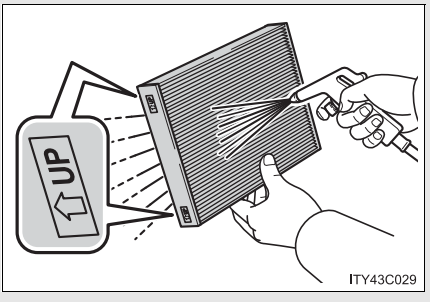


If the filter is dirty, clean by blowing compressed air through the filter from the underside.

Hold the air gun 2 in. (5 cm) from the filter and blow for approximately 2 minutes at 72 psi (500 kPa, 5.0 kgf/cm$^2$ or bar).

If an air gun is not available, have the filter cleaned by your Toyota dealer.

### Checking interval

Inspect, clean and replace the air conditioning filter according to the maintenance schedule. In dusty areas or areas with heavy traffic flow, more frequent cleaning or early replacement may be required. (For scheduled maintenance information, please refer to the “Scheduled Maintenance Guide” or “Owner’s Manual Supplement”.)

### If air flow from the vents decreases dramatically

The filter may be clogged. Check the filter and replace it if necessary.

NOTICE

**To prevent damage to the system**

- When using the air conditioning system, make sure that a filter is always installed.
- When cleaning the filter, do not clean with water.

**Replace the battery with a new one if it is discharged.**

## ■ You will need the following items:

- Flathead screwdriver
- Lithium battery CR2032

## ■ Replacing the battery (vehicles without a smart key system)

STEP 1

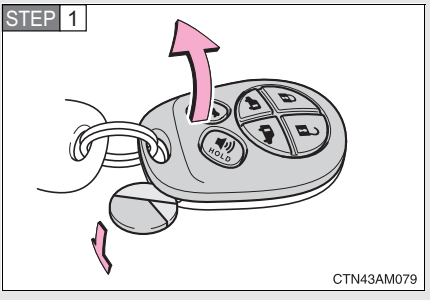


Remove the cover using a coin protected with tape etc.

STEP 2

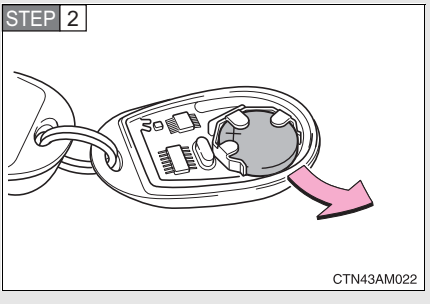


Remove the discharged transmitter battery.

Insert a new battery with the “+” terminal facing up.

## ■ Replacing the battery (vehicles with a smart key system)

STEP 1

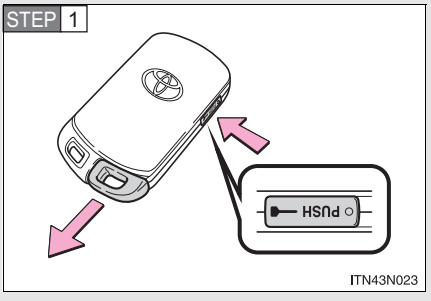


Take out the mechanical key.

STEP 2

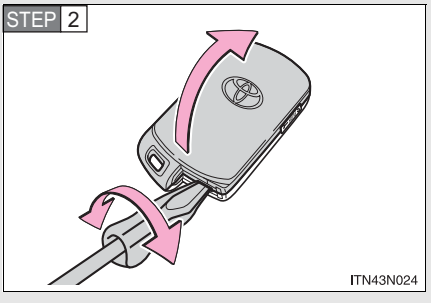


Remove the cover.

To prevent damage to the key, cover the tip of the screwdriver with a rag.

STEP 3

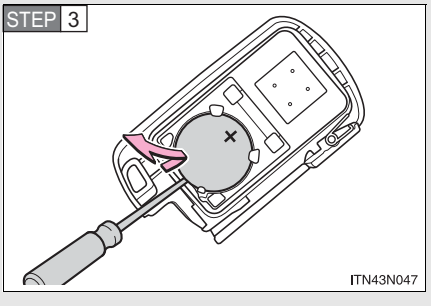


Remove the depleted battery.

Insert a new battery with the “+” terminal facing up.

### Use a CR2032 lithium battery

- Batteries can be purchased at your Toyota dealer, local electrical appliance shops or camera stores.
- Replace only with the same or equivalent type recommended by the manufacturer.
- Dispose of used batteries according to local laws.

### If the key battery is depleted

The following symptoms may occur.

- The smart key system (if equipped) and wireless remote control will not function properly.
- The operational range will be reduced.

**CAUTION**

**Removed battery and other parts**

Keep away from children.
These parts are small and if swallowed by a child, they can cause choking.

**NOTICE**

**For normal operation after replacing the battery**

Observe the following precautions to prevent accidents.

- Always work with dry hands.
  Moisture may cause the battery to rust.
- Do not touch or move any other components inside the remote control.
- Do not bend either of the battery terminals.

**If any of the electrical components do not operate, a fuse may have blown. If this happens, check and replace the fuses as necessary.**

STEP 1 **Vehicles without a smart key system**
Turn the engine switch off.

**Vehicles with a smart key system**
Turn the “ENGINE START STOP” switch OFF.

STEP 2 Open the fuse box cover.

**Engine compartment**

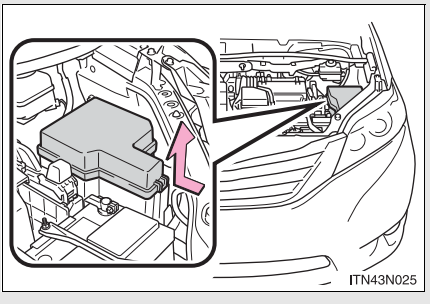


Push the tab in and lift the lid off.

**Driver’s side instrument panel**

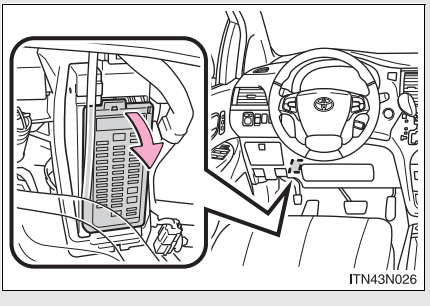


Remove the lid.

STEP 3 After a system failure, see “Fuse layout and amperage ratings” (→P. 651) for details about which fuse to check.

STEP 4

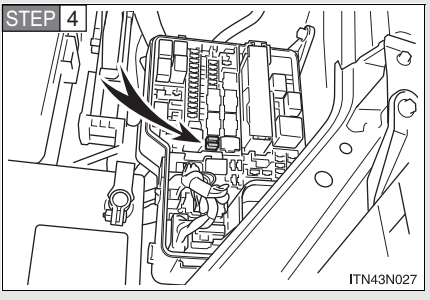


Take out the pullout tool.

Only type A fuses can be removed using the pullout tool.

STEP 5 Check if the fuse has blown.

**Type A**

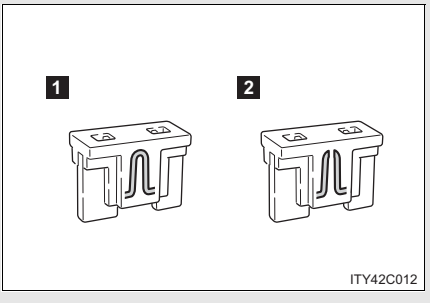


1 Normal fuse

2 Blown fuse

Replace the blown fuse with a new fuse of an appropriate amperage rating. The amperage rating can be found on the fuse box lid.

**Type B**

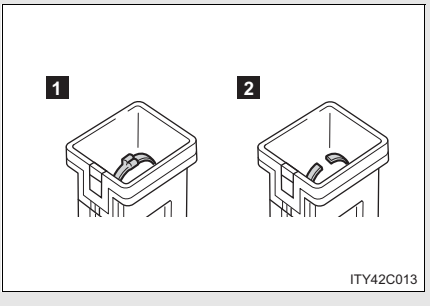


1 Normal fuse

2 Blown fuse

Replace the blown fuse with a new fuse of an appropriate amperage rating. The amperage rating can be found on the fuse box lid.

### Type C

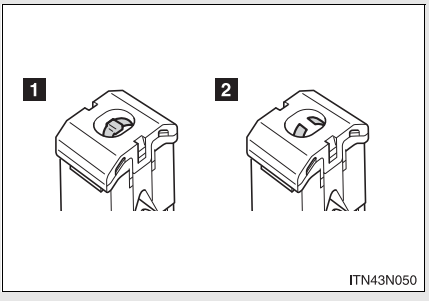


1 Normal fuse

2 Blown fuse

Contact your Toyota dealer.

### Type D

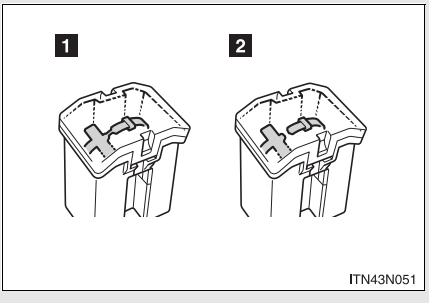


1 Normal fuse

2 Blown fuse

Contact your Toyota dealer.

### Type E

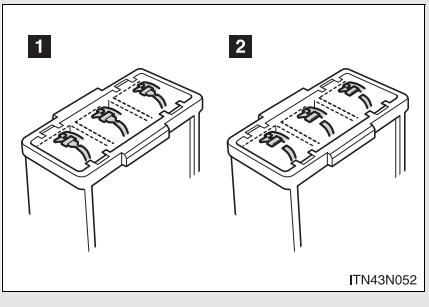


1 Normal fuse

2 Blown fuse

Contact your Toyota dealer.

## Fuse layout and amperage ratings

### Engine compartment

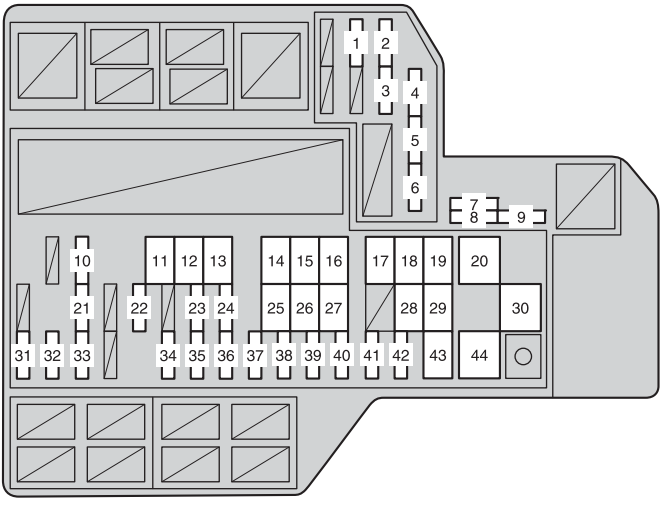


| Fuse | | Ampere | Circuit |
|---|---|---|---|
| 1 | DSS1 | 7.5 A | PCS (Pre-collision system), dynamic radar cruise control system |
| 2 | ST NO.2 | 7.5 A | Starting system, multiport fuel injection system/sequential multiport fuel injection system |
| 3 | ECT | 7.5 A | Multiport furl injection system/ sequential multiport fuel injection system, automatic transaxle |
| 4 | EFI NO.2 | 10 A | Multiport furl injection system/ sequential multiport fuel injection system |
| 5 | H-LP RH HI | 10 A | Right-hand headlight (high beam) |

| Fuse | | Ampere | Circuit |
|---|---|---|---|
| 6 | H-LP LH HI | 10 A | Left-hand headlight (high beam) |
| 7 | SPARE | 10 A | Spare-fuse |
| 8 | SPARE | 15 A | Spare-fuse |
| 9 | SPARE | 20 A | Spare-fuse |
| 10 | INV | 20 A | Inverter |
| 11 | PTC HTR NO.1*1 | 50 A | PTC heater |
| 12 | PTC HTR NO.2*1 | 30 A | PTC heater |
| 13 | PTC HTR NO.3*1 | 30 A | PTC heater |
| 14 | A/C RR | 40 A | Rear air conditioning system |
| 15 | PBD | 30 A | Power back door |
| 16 | FOLD SEAT*2 | 30 A | Power third seat |
| 17 | HTR | 50 A | Air conditioning system |
| 18 | PSB*2 | 30 A | Pre-collision seat belt |
| 19 | A/A SEAT | 30 A | AUTO ACCESS SEAT |
| 20 | FAN | 60 A | Electric cooling fans |
| 21 | HAZ | 15 A | Turn signal lights, gauges and meters |
| 22 | RSE | 15 A | Rear seat entertainment system |
| 23 | MIRROR*2 | 10 A | Outside rear view mirror control, outside rear view mirror heaters |
| 24 | AMP | 30 A | Audio system |
| 25 | VSC NO.2 | 30 A | Vehicle dynamics integrated management, ABS, vehicle stability control |

| Fuse | | Ampere | Circuit |
|---|---|---|---|
| 26 | ST | 30 A | Starting system |
| 27 | P/I | 40 A | Horn, alarm, left-hand headlight (low beam), right-hand headlight (low beam) |
| 28 | AM2*3 | 30 A | “ST NO.2”, “GAUGE NO.2” and “IG2” fuses |
| 29 | VSC NO.1 | 50 A | Vehicle dynamics integrated management, ABS, vehicle stability control |
| 30 | ALT | 140 A | Charging system, horn, alarm, left-hand headlight (low beam), right-hand headlight (low beam), fog light, outside rear view mirror heaters, rear window defoggers, windshield wiper de-icer |
| 31 | RAD NO.1 | 15 A | Audio system |
| 32 | DOME | 7.5 A | Vanity lights, personal/interior lights, personal lights, engine switch light, rear ceiling lights, door courtesy lights, luggage compartment light, gauges and meters, clock |
| 33 | ECU-B | 10 A | Main body ECU, smart key system, wireless remote control, power back door, power sliding door, rear view monitor, multi information display, power window, outside rear view mirror control, steering angle sensor, auto-anti glare inside rear view mirror, AUTO ACCESS SEAT remote control, front passenger occupant classification system |

| Fuse | | Ampere | Circuit |
|---|---|---|---|
| 34 | ETCS | 10 A | Multiport furl injection system/ sequential multiport fuel injection system |
| 35 | A/F | 20 A | Multiport furl injection system/ sequential multiport fuel injection system |
| 36 | STRG LOCK*4 | 20 A | Steering lock system |
| 37 | ALT-S | 7.5 A | Charging system |
| 38 | INJ | 25 A | Multiport furl injection system/ sequential multiport fuel injection system, “IG NO.2” and “IG2” fuses |
| 39 | ECU-B NO.2 | 7.5 A | Air conditioning system |
| 40 | AM2 NO.2*4 | 7.5 A | Multiplex communication system, starting system |
| 41 | EFI NO.1 | 25 A | Multiport furl injection system/ sequential multiport fuel injection system, “ECT” and “EFI NO.2” fuses |
| 42 | SMART*4 | 5 A | Smart key system |
| 43 | DRL | 30 A | Daytime running light system, “H-LP LH (HI)” and “H-LP RH (HI)” fuses |
| 44 | EPS | 60 A | Electric power steering |

*1: Vehicles with a 1AR-FE engine only
*2: Vehicles with a 2GR-FE engine only
*3: Vehicles without a smart key system only
*4: Vehicles with a smart key system only

## ■ Under the driver's side instrument panel

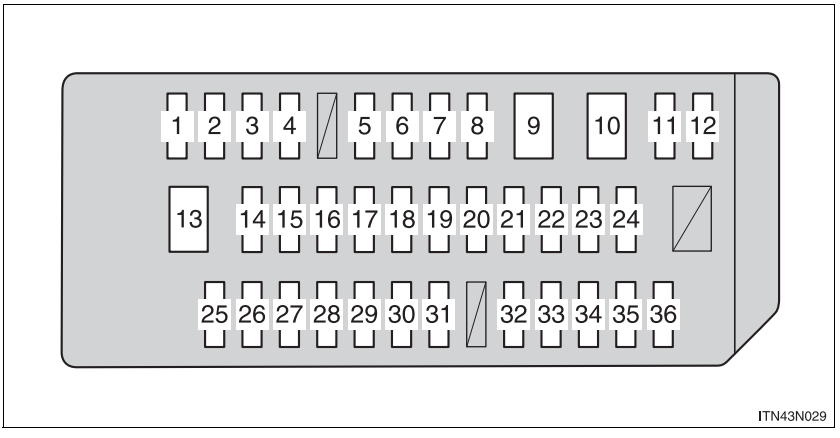


| Fuse | | Ampere | Circuit |
|---|---|---|---|
| 1 | P/OUTLET | 15 A | Power outlets |
| 2 | RAD NO.2 | 7.5 A | Audio system, navigation system, rear seat entertainment system |
| 3 | ECU-ACC | 10 A | Main body ECU, clock, shift lock system, power rear view mirror control, multiplex communication system |
| 4 | CIG | 15 A | Power outlets |
| 5 | GAUGE NO.1 | 10 A | Emergency flashers, buck up lights, navigation system, multi information display, automatic transaxle, multiport fuel injection system/sequential multiport fuel injection system, charging system |

| Fuse | | Ampere | Circuit |
|---|---|---|---|
| 6 | ECU-IG NO.1 | 10 A | Multiplex communication system, stop lights, navigation system, vehicle stability control system, Active Torque Control 4WD, intuitive parking assist, auto anti-glare inside rear view mirror, pre-collision seat belt, outside rear view mirror, seat heater, TPMS, yaw rate & G sensor, steering angle sensor, AUTO ACCESS SEAT, main body ECU |
| 7 | P/W RL | 20 A | Rear power windows (left-side) |
| 8 | D/L | 15 A | Power door lock system |
| 9 | P/SEAT FR | 30 A | Power front seat (right-side) |
| 10 | S/ROOF | 30 A | Moon roof |
| 11 | P/W RR | 20 A | Rear power windows (right-side) |
| 12 | P/W FR | 20 A | Front power windows (right-side) |
| 13 | P/SEAT FL | 30 A | Power front seat (left-side), driving position memory system |
| 14 | STOP | 10 A | Stop lights, ABS, vehicle stability control system, rear combination light, high mounted stop light, automatic transaxle, shift lock system, multiplex communication system, power third seat switch, multiport fuel injection system/sequential multiport fuel injection system, trailer lights (stop lights) |
| 15 | P/W FL | 20 A | Front power windows (left-side) |

| Fuse | | Ampere | Circuit |
|---|---|---|---|
| 16 | PSD LH | 25 A | Power sliding door (left-side) |
| 17 | 4WD | 7.5 A | Active Torque Control 4WD |
| 18 | AM1 | 10 A | Starting system |
| 19 | GAUGE NO.2 | 7.5 A | Gauges and meters, multi information display |
| 20 | IG2 | 7.5 A | Automatic transaxle, multiport fuel injection system/sequential multiport fuel injection system, SRS airbag system, front passenger occupant classification system, steering lock system, smart key system, starting system, fuel pump |
| 21 | PANEL | 10 A | Air conditioning system, navigation system, front passenger's seat belt reminder light, audio system, steering switch, intuitive parking assist switch, personal/interior light main switch, shift lever light, headlight levering switch, power door lock main switch, clock, power quarter window switch, seat heater switch, emergency flashers, rear window defogger switch, vehicle stability control off switch, console box light, power slide switch light |

| Fuse | | Ampere | Circuit |
|---|---|---|---|
| 22 | TAIL | 10 A | Tail lights, trailer lights (tail lights), license plate light, rear combination lights |
| 23 | WIP ECU | 7.5 A | Windshield wiper and rear window wiper |
| 24 | P/VENT | 15 A | Power quarter windows |
| 25 | AFS | 10 A | Automatic High Beam |
| 26 | WIP | 30 A | Windshield wiper |
| 27 | WASHER | 20 A | Windshield washer |
| 28 | WIP RR | 20 A | Rear window wiper |
| 29 | WASHER RR | 15 A | Rear window washer |
| 30 | HTR-IG | 10 A | Air conditioning system |
| 31 | SHIFT LOCK | 7.5 A | Shift lock system, multiport fuel injection system/sequential multi-port fuel injection system |
| 32 | ECU-IG NO.2 | 10 A | Pre-collision system, pre-collision seat belt, dynamic radar cruise control, electric power steering, rain-sensing windshield wipers, driving position memory system, power sliding door, power third seat, power back door, multiplex communication system |
| 33 | PSD RH | 25 A | Power sliding door (right-side) |
| 34 | OBD | 7.5 A | On-board diagnosis system |
| 35 | S-HTR FL | 15 A | Seat heater (left-side) |
| 36 | S-HTR FR | 15 A | Seat heater (right-side) |

### After a fuse is replaced

- If the lights do not turn on even after the fuse has been replaced, a bulb may need replacement. (→P. 660)
- If the replaced fuse blows again, have the vehicle inspected by your Toyota dealer.

### If there is an overload in the circuit

The fuses are designed to blow before the entire wiring harness is damaged.

**CAUTION**

#### To prevent system breakdowns and vehicle fire

Observe the following precautions.
Failing to do so may cause damage, and possibly a fire or injury.

- Never use a fuse of a higher amperage rating than that indicated, or use any other object in place of a fuse.
- Always use a genuine Toyota fuse or equivalent.
  Never replace a fuse with a wire, even as a temporary fix.
  This can cause extensive damage or even fire.
- Do not modify the fuses or fuse boxes.

**NOTICE**

#### Before replacing fuses

Have the cause of electrical overload determined and repaired by your Toyota dealer as soon as possible.

**You may replace the following bulbs yourself. The difficulty level of replacement varies depending on the bulb. If necessary bulb replacement seems difficult to perform, contact your Toyota dealer.**

**For more information about replacing other light bulbs, contact your Toyota dealer.**

## ■ Preparing for light bulb replacement

Check the wattage of the light bulb to be replaced. (→P. 745)

## ■ Turning off the power back door main switch

→P. 79

## ■ Front bulb locations

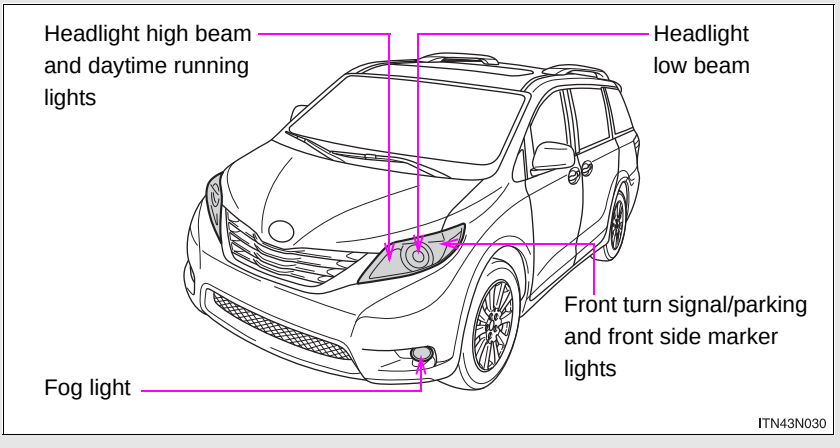

### ■ Rear bulb locations

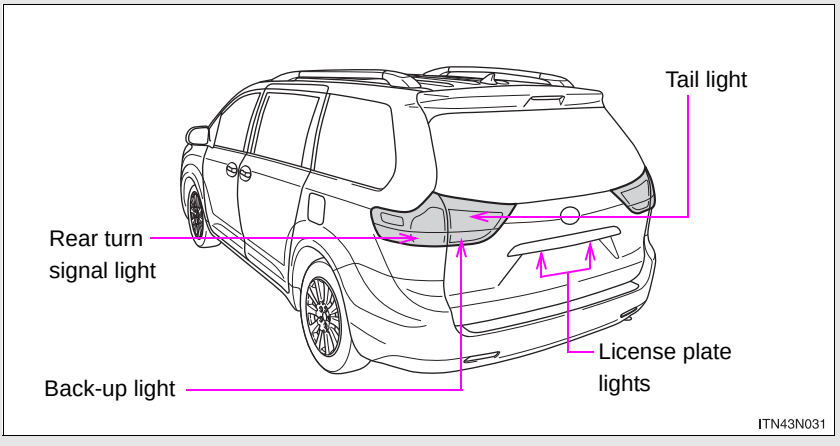


## Replacing light bulbs

### ■ Headlight low beams (halogen bulb)

STEP 1 For left side only:

Open the fuse box cover. (→P. 648)

STEP 2

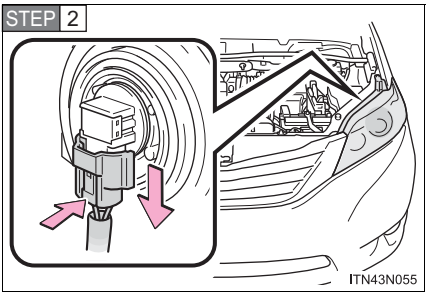


Unplug the connector while pushing the lock release.

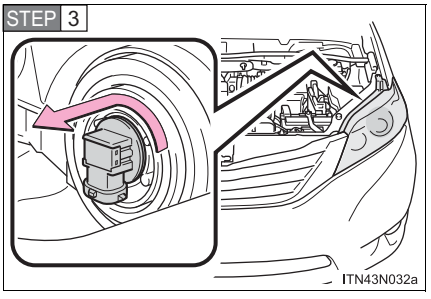


Turn the bulb base counterclockwise.

## ■ Headlight high beams and daytime running lights

STEP 1 For left side only:
Open the fuse box cover. (→P. 648)

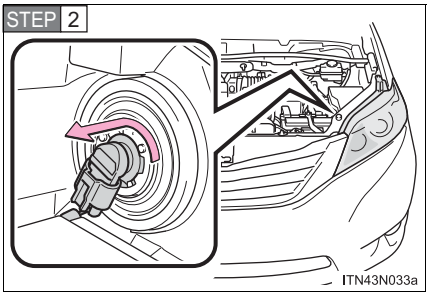


Turn the bulb base counterclockwise.

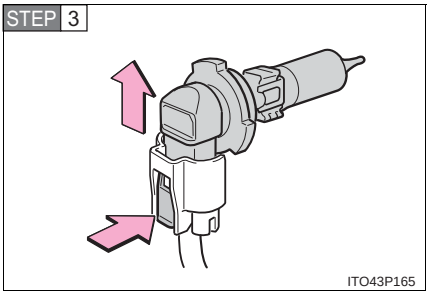


Unplug the connector while pushing the lock release.

## ■ Front fog lights (if equipped)

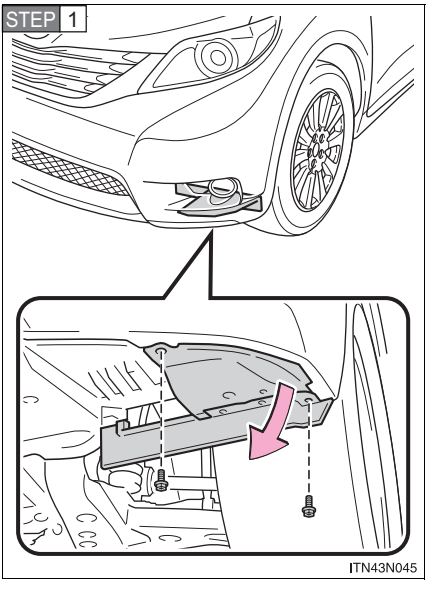


Remove the engine under cover bolt and pull down the engine under cover.

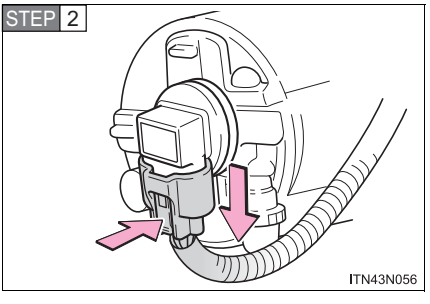


Unplug the connector while pushing the lock release.

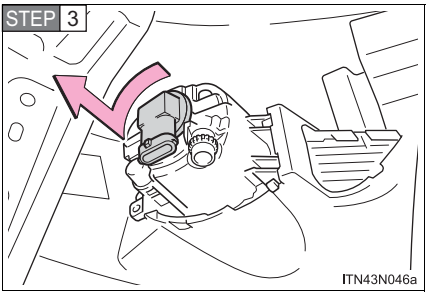


Turn the bulb base counterclockwise.

## ■ Front turn signal/parking and front side marker lights

STEP 1 For left side only:

Open the fuse box cover. (→P. 648)

**Vehicles without discharge headlights**

STEP 2

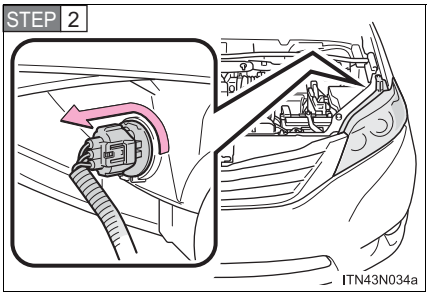


Turn the bulb base counterclockwise.

**Vehicles with discharge headlights**

STEP 2

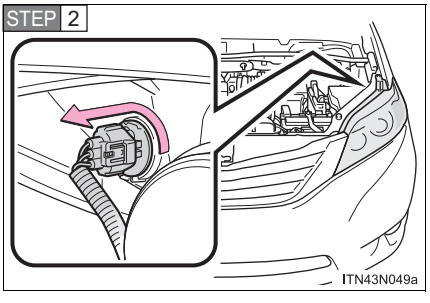


STEP 3

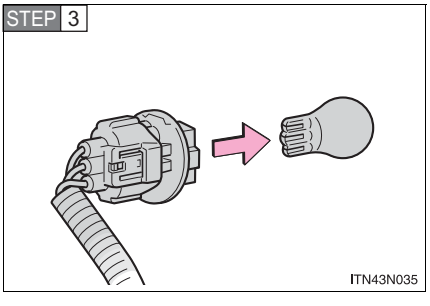


Remove the light bulb.

## ■ Rear turn signal light

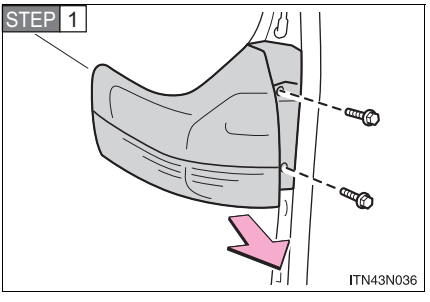


Remove the securing bolts and remove the unit.

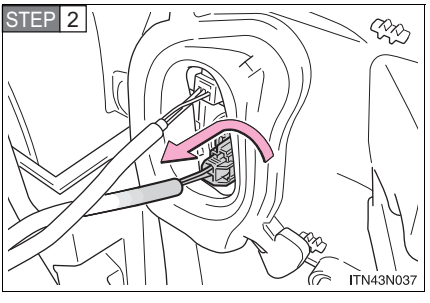


Turn the bulb base counterclockwise.

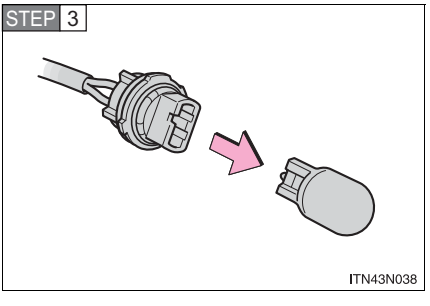


Remove the light bulb.

## ■ Tail and back-up lights

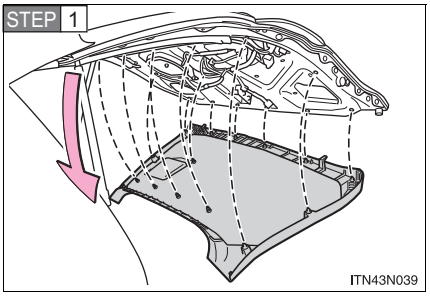


Remove the back door trim board.

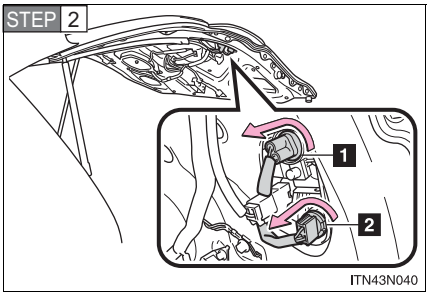


Turn the bulb base counterclockwise.

1 Tail light

2 Back-up light

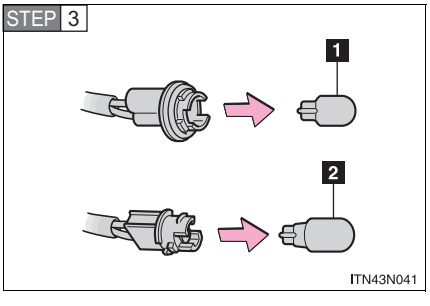


Remove the light bulb.

1 Tail light

2 Back-up light

## License plate lights

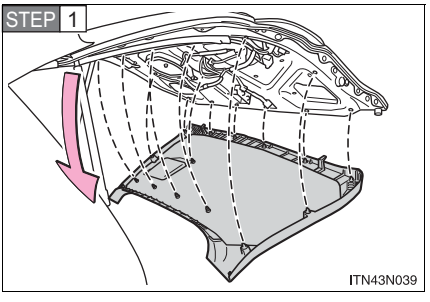


Remove the back door trim board.

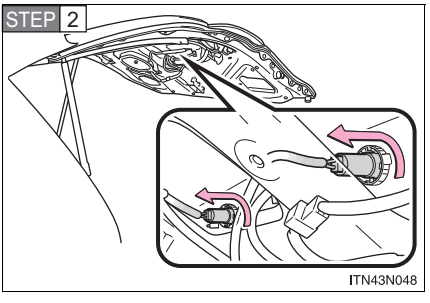


Turn the bulb base counterclockwise.

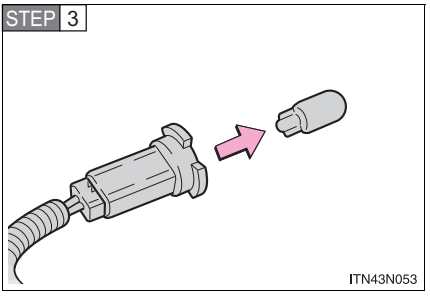


Remove the light bulb.

### Lights other than the above

If any of the lights listed below has burnt out, have it replaced by your Toyota dealer.

- Headlight low beams (discharge bulbs)
- High mounted stoplight
- Stop/tail and rear side marker lights
- Outer foot lights (if equipped)

---

#### Discharge headlights (if equipped)

If voltage to the discharge bulbs is insufficient, the bulbs may not come on, or may go out temporarily. The discharge bulbs will come on when normal power is restored.

#### LED lights

The stop/tail and rear side marker lights and high mounted stoplight consists of a number of LEDs. If any of the LEDs burn out, take your vehicle to your Toyota dealer to have the light replaced.

#### Condensation build-up on the inside of the lens

Contact your Toyota dealer for more information in the following situations. Temporary condensation build-up on the inside of the headlight lens does not indicate a malfunction.

- Large drops of water have built up on the inside of the lens.
- Water has built up inside the headlight.

CAUTION

■ **Replacing light bulbs**

- Turn off the lights. Do not attempt to replace the bulb immediately after turning off the lights.
  The bulbs become very hot and may cause burns.
- Do not touch the glass portion of the light bulb with bare hands. Hold the bulb by the plastic or metal portion.
  If the bulb is scratched or dropped it may blow out or crack.
- Fully install light bulbs and any parts used to secure them. Failure to do so may result in heat damage, fire, or water entering the headlight unit. This may damage the headlights or cause condensation to build up on the lens.

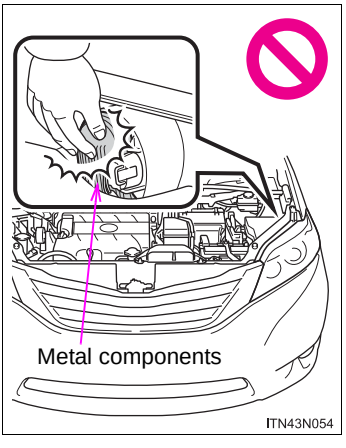


- Vehicles with discharge headlights:
  While the low beam headlights are turned on, and for a short time after they have been turned off, metal components at the rear of the headlight assembly will be extremely hot. To prevent burns, do not touch these metal components until you are certain they have cooled down.

CAUTION

**Discharge headlights (if equipped)**

- Contact your Toyota dealer before replacing discharge headlights (including light bulbs).
- Do not touch the discharge headlight's high voltage socket when the headlights are turned on.
  An extremely high voltage of 30000 V will be discharged and could result in serious injury or death by electric shock.
- Do not attempt to take apart or repair the low beam headlight bulbs, connectors, power supply circuits, or related components.
  Doing so could result in electric shock and serious injury or death.

**To prevent damage or fire**

Make sure bulbs are fully seated and locked.

NOTICE

**When installing the back door trim**

To prevent damage, be careful not to pinch any of the wire harnesses or connectors with the back door trim.

# When trouble arises

# 5


**5-1. Essential information**

Emergency flashers ..... 672

If your vehicle needs to be towed ..... 673

If you think something is wrong ..... 677

Fuel pump shut off system ..... 678

Event data recorder ..... 679

**5-2. Steps to take in an emergency**

If a warning light turns on or a warning buzzer sounds... ..... 681

If a warning message is displayed ..... 694

If you have a flat tire (vehicles with run-flat tires)..... 695

If you have a flat tire (vehicles with standard tires) ..... 697

If the engine will not start ..... 712

If the shift lever cannot be shifted from P ..... 714

If you lose your keys/wireless remote control transmitter ..... 716

If the electronic key does not operate properly ..... 717

If the battery is discharged..... 720

If your vehicle overheats ..... 725

If the vehicle becomes stuck..... 728

If your vehicle has to be stopped in an emergency ..... 730

# Emergency flashers

**Use the emergency flashers if the vehicle malfunctions or is involved in an accident.**

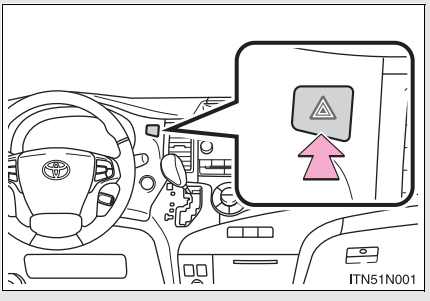


Press the switch to flash all the turn signal lights. To turn them off, press the switch once again.

NOTICE

**To prevent battery discharge**

Do not leave the emergency flashers on longer than necessary when the engine is not running.

**If towing is necessary, we recommend having your vehicle towed by your Toyota dealer or a commercial towing service, using a wheel-lift type truck or flat bed truck.**
**Use a safety chain system for all towing, and abide by all state/provincial and local laws.**
**2WD models: If towing your vehicle with a wheel-lift type truck from the front, the vehicle's rear wheels and axles must be in good conditions. (→P. 674, 676)**
**If they are damaged, use a towing dolly or flat bed truck.**

**AWD models: If towing your vehicle with a wheel-lift type truck, use a towing dolly. (→P. 674, 676)**

## Before towing

The following may indicate a problem with your transaxle. Contact your Toyota dealer before towing.

- The engine is running but the vehicle will not move.
- The vehicle makes an abnormal sound.

## Towing with a sling-type truck

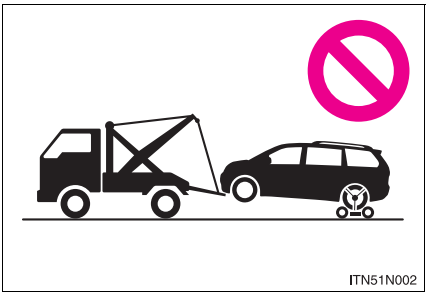


Do not tow with a sling type truck to prevent body damage.

## Towing with a wheel-lift type truck

### From the front (2WD models)

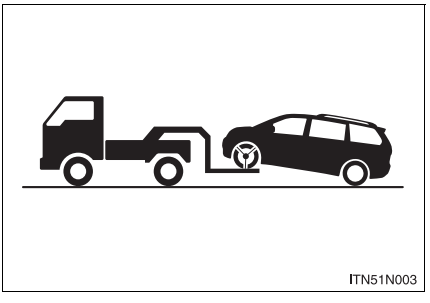


Release the parking brake.

### From the front (AWD models)

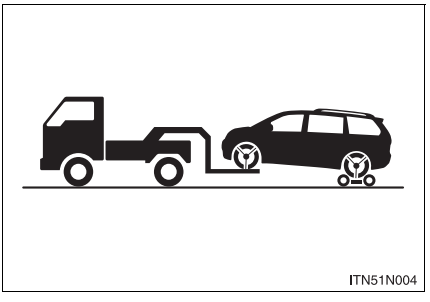


Use a towing dolly under the rear wheels.

### From the rear

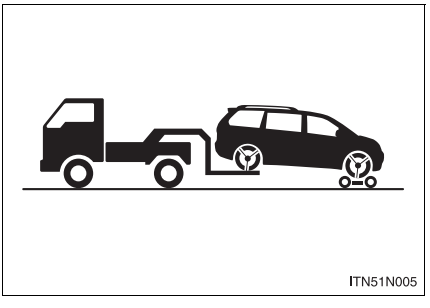


Use a towing dolly under the front wheels.

## Using a flat bed truck

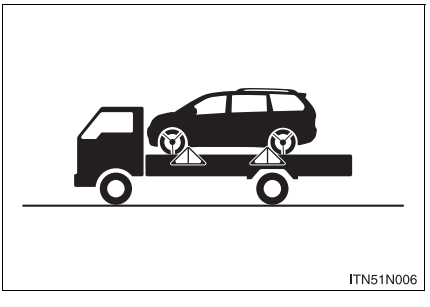


If you use chains or cables to tie down your vehicle, the angles shaded in black must be 45°.

Do not overly tighten the tie downs or the vehicle may be damaged.

NOTICE

■ **To prevent body damage when towing with a sling-type truck**

Do not tow with a sling-type truck, either from the front or rear.

■ **To prevent causing serious damage to the transaxle and Active Torque Control 4WD system (AWD models) when towing using a wheel-lift type truck**

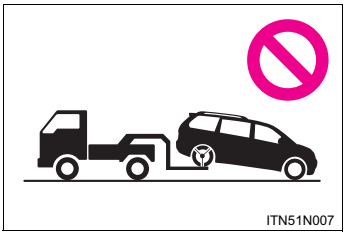


2WD models: Never tow this vehicle from the rear with the front wheels on the ground. This may cause serious damage to the transaxle. If towing from the rear, used towing dolly.

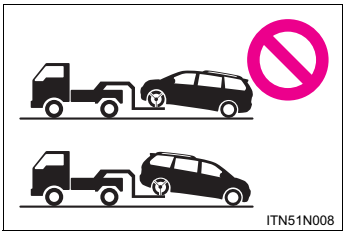


AWD models: Never tow this vehicle with any of the wheels on the ground. This may cause serious damage to the transaxle and Active Torque Control 4WD system. Use a towing dolly.

■ **To prevent damaging the vehicle when towing using a wheel-lift type truck**

When raising the vehicle, ensure adequate ground clearance for towing at the opposite end of the raised vehicle. Without adequate clearance, the vehicle could be damaged while being towed.

■ **Recreational towing (behind motor home, etc.)**

Never dinghy tow your vehicle to prevent causing serious damage to the Active Torque Control 4WD system (AWD models) and transaxle. (→P. 341)

**If you notice any of the following symptoms, your vehicle probably needs adjustment or repair. Contact your Toyota dealer as soon as possible.**

## Visible symptoms

- Fluid leaks under the vehicle
  (Water dripping from the air conditioning after use is normal.)
- Flat-looking tires or uneven tire wear
- Engine coolant temperature gauge needle continually points higher than normal

## Audible symptoms

- Changes in exhaust sound
- Excessive tire squeal when cornering
- Strange noises related to the suspension system
- Pinging or other noises related to the engine

## Operational symptoms

- Engine missing, stumbling or running rough
- Appreciable loss of power
- Vehicle pulls heavily to one side when braking
- Vehicle pulls heavily to one side when driving on a level road
- Loss of brake effectiveness, spongy feeling, pedal almost touches the floor

## Fuel pump shut off system

**To minimize the risk of fuel leakage when the engine stalls or when an airbag inflates upon collision, the fuel pump shut off system stops the supply of fuel to the engine.**

Follow the procedure below to restart the engine after the system is activated.

### Vehicles without a smart key system

STEP 1 Turn the engine switch to the “ACC” or “LOCK” position.

STEP 2 Restart the engine.

### Vehicles with a smart key system

STEP 1 Turn the “ENGINE START STOP” switch to ACCESSORY mode or turn it off.

STEP 2 Restart the engine.

NOTICE

**Before starting the engine**

Inspect the ground under the vehicle.
If you find that fuel has leaked onto the ground, the fuel system has been damaged and is in need of repair. Do not restart the engine.

# Event data recorder

**Your vehicle has computers that monitor and control certain aspects of your vehicle. These computers assist in driving and maintaining optimal vehicle performance.**

Besides storing data useful for troubleshooting, there is an event data recorder (EDR) that records data in a crash or a near crash event.

## In a crash or near crash event

The SRS airbag sensor assembly contains the EDR. In a crash or near crash event, this device may record some or all of the following information:

- Gasoline engine speed
- Whether the brake pedal was depressed or not
- Vehicle speed
- To what extent the accelerator pedal was depressed
- Position of the transaxle shift lever
- Whether the driver and front passenger wore seat belts or not
- Driver's seat position
- SRS airbag deployment data
- SRS airbag system diagnostic data
- Front passenger occupant classification

The information above is intended to be used for the purpose of improving vehicle safety performance. Unlike general data recorders, the EDR does not record sound data such as conversation between passengers.

## Disclosure of the data

Toyota will not disclose the data recorded in an EDR to a third party except when:

- An agreement from the vehicle's owner (or the leasing company for a leased vehicle) is obtained
- Officially requested to by the police or other authorities
- Necessary, to be used as a defense for Toyota in a law suit
- Ordered to by a court of law

However, if necessary, Toyota will:

- Use the data for research on Toyota vehicle safety performance
- Disclose the data to a third party for research purposes without disclosing details of the vehicle owner, and that only when deemed necessary
- Disclose summarized data cleared of vehicle identification information to a non-Toyota organization for research purposes

**Calmly perform the following actions if any of the warning lights comes on or flashes. If a light comes on or flashes, but then goes off, this does not necessarily indicate a malfunction in the system. However, if this continues to occur, have the vehicle inspected by your Toyota dealer.**

**Stop the vehicle immediately. Continuing to drive the vehicle may be dangerous.**

The following warning indicates a possible problem in the brake system. Immediately stop the vehicle in a safe place and contact your Toyota dealer.

| Warning light | Warning light/Details |
|---|---|
| BRAKE (U.S.A.)<br>(Canada) | **Brake system warning light (warning buzzer)***<br>• Low brake fluid<br>• Malfunction in the brake system<br>This light also comes on when the parking brake is not released. If the light turns off after the parking brake is fully released, the system is operating normally. |

*: Parking brake engaged warning buzzer: A buzzer will sound if the vehicle is driven at a speed of approximately 3 mph (5 km/h) or more.

## Stop the vehicle immediately.

The following warnings indicate the possibility of damage to the vehicle that may lead to an accident. Immediately stop the vehicle in a safe place and contact your Toyota dealer.

| Warning light | Warning light/Details |
|---|---|
| | **Charging system warning light**<br>Indicates a malfunction in the vehicle's charging system |
| | **Low engine oil pressure warning light**<br>Indicates that the engine oil pressure is too low |

## Have the vehicle inspected immediately.

Failure to investigate the cause of the following warnings may lead to the system operating abnormally and possibly cause an accident. Have the vehicle inspected by your Toyota dealer immediately.

| Warning light | Warning light/Details |
|---|---|
| CHECK<br>(U.S.A.)<br>(Canada) | **Malfunction indicator lamp**<br>Indicates a malfunction in:<br>• The electronic engine control system;<br>• The electronic throttle control system; or<br>• The electronic automatic transaxle control system |
| | **SRS warning light**<br>Indicates a malfunction in:<br>• The SRS airbag system;<br>• The front passenger occupant classification system; or<br>• The seat belt pretensioner system |

| Warning light | Warning light/Details |
|---|---|
| ABS (U.S.A.)<br>(ABS) (Canada) | **“ABS” warning light**<br>Indicates a malfunction in:<br>• The ABS; or<br>• The brake assist system |
| | **Electric power steering system warning light**<br>Indicates a malfunction in the EPS (Electric Power Steering) system |
| PCS (comes on or flashing) | **Pre-collision system warning light (if equipped)**<br>Indicates a malfunction in the pre-collision system (→P. 307) |
| | **Slip indicator light**<br>Indicates a malfunction in:<br>• Enhanced VSC<br>• TRAC<br>The indicator will blink when the system listed above is operational. (→P. 300) |
| AUTO (Flashing) | **Automatic High Beam indicator light (if equipped)**<br>Indicates a malfunction in the Automatic High Beam system (→P. 257) |
| (Flashing) | **Cruise control indicator light (if equipped)**<br>Indicates a malfunction in the cruise control system (→P. 271, 275) |
| (Flashing) | **Radar cruise control indicator light (if equipped)**<br>Indicates a malfunction in the Dynamic radar cruise control system (→P. 275) |

## Follow the correction procedures.

After taking the specified steps to correct the suspected problem, check that the warning light turns off.

| Warning light | Warning light/Details | Correction procedure |
|---|---|---|
| | **Open door warning light (warning buzzer)*1**<br>Indicates that a door is not fully closed. | Check that all the doors are closed. |
| | **Low fuel level warning light**<br>Indicates remaining fuel is approximately 3.0 gal. (11.4 L, 2.5 Imp. gal.) or less | Refuel the vehicle. |
| | **Driver's seat belt reminder light (warning buzzer)*2**<br>Warns the driver to fasten his/her seat belt. | Fasten the seat belt. |
| PASSENGER<br>(on the center panel) | **Front passenger's seat belt reminder light (warning buzzer)*2**<br>Warns the front passenger to fasten his or her seat belt. | Fasten the seat belt. |
| | **Master warning light**<br>A buzzer sounds and the warning light comes on and flashes to indicate that the master warning system has detected a malfunction. | →P. 694 |

| Warning light | Warning light/Details | Correction procedure |
|---|---|---|
| | **Tire pressure warning light** | |
| | When the light comes on: Low tire inflation pressure | Adjust the tire inflation pressure. |
| | When the light comes on after blinking for 1 minute: Malfunction in the tire pressure warning system | Have the system checked by your Toyota dealer. |
| | **Low windshield washer fluid warning light**<br>Low level of washer fluid | Fill the tank. |
| | **Engine oil replacement reminder light** | |
| MAINT REQD<br>(U.S.A.) | Illuminates for about 3 seconds and then flashes for about 12 seconds approximately 4500 miles (7200 km) after the engine oil is changed: Indicates that the engine oil is scheduled to be changed. | Check the engine oil, and change if necessary. |
| | Comes on and remains on if the distance driven exceeds 5000 miles (8000 km): Indicates that the engine oil should be changed. | Check and change the engine oil. |

| Warning light | Warning light/Details | Correction procedure |
|---|---|---|
| 3RD SEAT | **Third seat warning light (if equipped)**<br>Indicates that the third seat operation is not yet complete. | Complete the third seat operation. |
| AWD<br>(AWD models) | **Active Torque Control 4WD system warning light** | |
| | When the light blinks: The system has been overloaded and front-wheel drive has been automatically engaged. | Drop your speed or stop the vehicle until the light stops blinking. (Do not stop the engine.) |
| | When the light comes on: Malfunction in the Active Torque Control 4WD system. | Have the system checked by your Toyota dealer. |

*1:Open door warning buzzer:

A buzzer will sound if the vehicle reaches a speed of 3 mph (5 km/h) with any door open.

*2:Driver's and front passenger's seat belt warning buzzers:

The driver's and front passenger's seat belt warning buzzers sound to alert the driver and front passenger that his or her seat belt is not fastened. The buzzer sounds intermittently for 10 seconds after the vehicle has reached a speed of 12 mph (20 km/h). Then, if the seat belt is still unfastened, the buzzer will sound at a different tone for 20 more seconds.

---

### ■ SRS warning light

This warning light system monitors the airbag sensor assembly, front airbag sensors, side and curtain shield airbag sensors, curtain shield airbag sensors, driver's seat position sensor, driver's seat belt buckle switch, front passenger occupant classification system, "AIR BAG ON" indicator light, "AIR BAG OFF" indicator light, front passenger's seat belt buckle switch, seat belt pretensioner assemblies, inflators, interconnecting wiring and power sources. (→P. 159)

### ■ Front passenger detection sensor and passenger seat belt reminder

- If luggage is placed on the front passenger seat, the front passenger detection sensor may cause the warning light to flash even if a passenger is not sitting in the seat.
- If a cushion is placed on the seat, the sensor may not detect a passenger, and the warning light may not operate properly.

### ■ If the malfunction indicator lamp comes on while driving

First check the following:

- Is the fuel tank empty?
  If it is, fill the fuel tank immediately.
- Is the fuel tank cap loose?
  If it is, tighten it securely.

The malfunction indicator lamp will go off after taking several driving trips.
If the malfunction indicator lamp does not go off even after several trips, contact your Toyota dealer as soon as possible.

### ■ Changing the engine oil (U.S.A. only)

Make sure to reset the oil change system. (→P. 614)

### ■ When the tire pressure warning light comes on

Check the tire inflation pressure and adjust to the appropriate level. Pushing the tire pressure warning reset switch will not turn off the tire pressure warning light.

### ■ The tire pressure warning light may come on due to natural causes

The tire pressure warning light may come on due to natural causes such as natural air leaks and tire inflation pressure changes caused by temperature. In this case, adjusting the tire inflation pressure will turn off the warning light (after a few minutes).

### ■ When a tire is replaced with a spare tire (vehicles with compact spare tire)

The compact spare tire is not equipped with a tire pressure warning valve and transmitter. If a tire goes flat, the tire pressure warning light will not turn off even though the flat tire has been replaced with the spare tire. Replace the spare tire with the repaired tire and adjust the tire inflation pressure. The tire pressure warning light will go off after a few minutes.

### ■If the tire pressure warning system is inoperative

The tire pressure warning system will be disabled in the following conditions:
(When the condition becomes normal, the system will work properly.)

- If tires not equipped with tire pressure warning valves and transmitters are used.
- If the ID code on the tire pressure warning valves and transmitters is not registered in the tire pressure warning computer.

The tire pressure warning system may be disabled in the following conditions:
(When the condition becomes normal, the system will work properly.)

- If electronic devices or facilities using similar radio wave frequencies are nearby.
- If a radio set at similar frequencies is in use in the vehicle.
- If there is a lot of snow or ice on the vehicle, in particular around the wheels or wheel housings.
- If non-genuine Toyota wheels are used. (Even if you use Toyota wheels, the tire pressure warning system may not work properly with some types of tires.)
- If tire chains are used.

### ■ If the tire pressure warning light comes on after blinking for 1 minute frequently

**Vehicles without a smart key system**

If the tire pressure warning light comes on after blinking 1 minute frequently when the engine switch is turned to the “ON” position, have it checked by your Toyota dealer.

**Vehicles with a smart key system**

If the tire pressure warning light comes on after blinking 1 minute frequently when the “ENGINE START STOP” switch is turned to IGNITION ON mode, have it checked by your Toyota dealer.

### ■ Customization that can be configured at Toyota dealer

The vehicle speed linked seat belt reminder buzzer can be disabled. (Customizable features →P. 761) However, Toyota recommends that the seat belt reminder buzzer be operational to alert the driver and front passenger when seat belts are not fastened.

CAUTION

**When the electric power steering system warning light comes on**

The steering wheel may become extremely heavy.
If the steering wheel becomes heavier than usual when operating, hold firmly and operate using more force than usual.

**If the tire pressure warning light comes on**

Be sure to observe the following precautions. Failure to do so could cause loss of vehicle control and result in death or serious injury.

- Vehicles with standard tires:
  - Stop your vehicle in a safe place as soon as possible. Adjust the tire inflation pressure immediately.
  - If the tire pressure warning light comes on even after tire inflation pressure adjustment, it is probable that you have a flat tire. Check the tires. If a tire is flat, change it with the spare tire and have the flat tire repaired by the nearest Toyota dealer.
  - Avoid abrupt maneuvering and braking. If the vehicle tires deteriorate, you could lose control of the steering wheel or the brakes.
- Vehicles with run-flat tires:
  - Decelerate to the lowest appropriate speed as soon as possible. Do not drive over 55 mph (90 km/h).
  - Check and adjust the tire inflation pressure immediately.
  - If the tire pressure warning light comes on even after tire inflation pressure adjustment, it is probable that you have a flat tire. Have the tire replaced by the nearest Toyota dealer.
  - Avoid abrupt maneuvering and braking. If the vehicle tires deteriorate, you could lose control of the steering wheel or the brakes.

**If a blowout or sudden air leakage should occur**

The tire pressure warning system may not activate immediately.

CAUTION

**Maintenance of the tires**

Each tire, including the spare (if provided), should be checked monthly when cold and inflated to the inflation pressure recommended by the vehicle manufacturer on the vehicle placard or tire inflation pressure label (tire and load information label). (If your vehicle has tires of a different size than the size indicated on the vehicle placard or tire inflation pressure label [tire and load information label], you should determine the proper tire inflation pressure for those tires.)

As an added safety feature, your vehicle has been equipped with a tire pressure monitoring system (TPMS-tire pressure warning system) that illuminates a low tire pressure telltale (tire pressure warning light) when one or more of your tires is significantly under-inflated. Accordingly, when the low tire pressure telltale (tire pressure warning light) illuminates, you should stop and check your tires as soon as possible, and inflate them to the proper pressure. Driving on a significantly under-inflated tire causes the tire to overheat and can lead to tire failure. Under-inflation also reduces fuel efficiency and tire tread life, and may affect the vehicle's handling and stopping ability.

Please note that the TPMS (tire pressure warning system) is not a substitute for proper tire maintenance, and it is the driver's responsibility to maintain correct tire pressure, even if under-inflation has not reached the level to trigger illumination of the TPMS low tire pressure telltale (tire pressure warning light).

**CAUTION**

Your vehicle has also been equipped with a TPMS (tire pressure warning system) malfunction indicator to indicate when the system is not operating properly. The TPMS (tire pressure warning system) malfunction indicator is combined with the low tire pressure telltale (tire pressure warning light). When the system detects a malfunction, the telltale will flash for approximately one minute and then remain continuously illuminated. This sequence will continue upon subsequent vehicle start-ups as long as the malfunction exists. When the malfunction indicator is illuminated, the system may not be able to detect or signal low tire pressure as intended.

TPMS (tire pressure warning system) malfunctions may occur for a variety of reasons, including the installation of replacement or alternate tires or wheels on the vehicle that prevent the TPMS (tire pressure warning system) from functioning properly. Always check the TPMS (tire pressure warning system) malfunction telltale after replacing one or more tires or wheels on your vehicle to ensure that the replacement or alternate tires and wheels allow the TPMS (tire pressure warning system) to continue to function properly.

**NOTICE**

**Precaution when installing a different tire**

When a tire of a different specification or maker is installed, the tire pressure warning system may not operate properly.

# If a warning message is displayed*

**The multi-information display shows warnings of system malfunctions or incorrectly performed operations. When a message is shown, perform corrections as indicated in the message.**

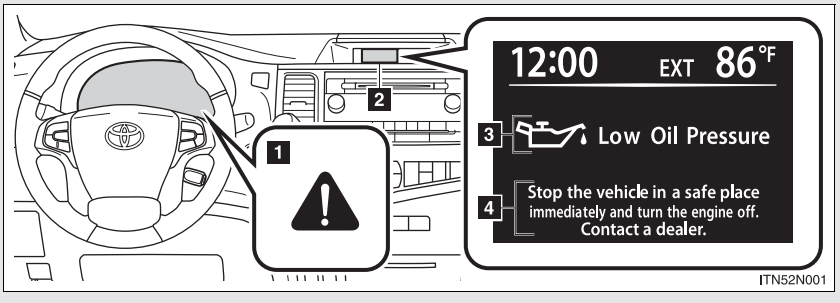


1 Master warning light

The master warning light comes on or flashes when a message is being shown on the multi-information display.

2 Multi-information display

3 Warning message

4 Correction procedure

■ **Warning buzzer**

A buzzer may sound when a warning message is shown on the multi-information display.

■ **If the warning message is shown again after its correction procedure has been performed**

Contact your Toyota dealer as soon as possible.

*: If equipped

**You can continue driving a vehicle with run-flat tires even if any tire goes flat.**

**In this case, slow down and drive with extra caution.**

■ **Run-flat tires (A “RFT” or “DSST” mark is molded on the sidewall)**

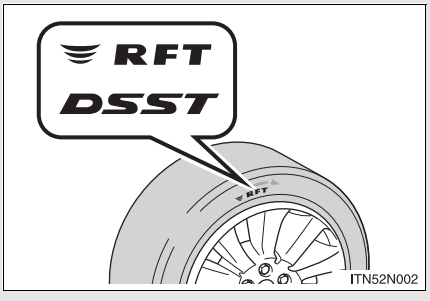


Take your vehicle to the nearest Toyota dealer or authorized tire dealer as soon as possible if any tire goes flat.

The vehicle can be driven for a maximum of 100 miles (160 km) at a speed below 55 mph (90 km/h) after the tire pressure warning light comes on. (→P. 684)

■ **In some condition (such as at high temperatures)**

You cannot continue driving for up to 100 miles (160 km).

■ **For the detailed information on run-flat tires**

See the tire warranty booklet.

NOTICE

**When replacing the tires**

When removing or fitting the wheels, tires or the tire pressure warning valve and transmitter, contact your Toyota dealer as the tire pressure warning valve and transmitter may be damaged if not handled correctly.

**When driving over bumps**

If a vehicle has a flat tire, the vehicle height will be lower than usual. Ensure that nothing strikes the bottom of the vehicle.

**To avoid damaging the tire pressure warning valves and transmitters**

Do not use liquid sealants on flat tires.

**Remove the flat tire and replace it with the spare tire provided.**

## Before jacking up the vehicle

- Stop the vehicle on a hard, flat surface.
- Set the parking brake.
- Shift the shift lever to P.
- Stop the engine.
- Turn on the emergency flashers.

## Location of the spare tire, jack and tools

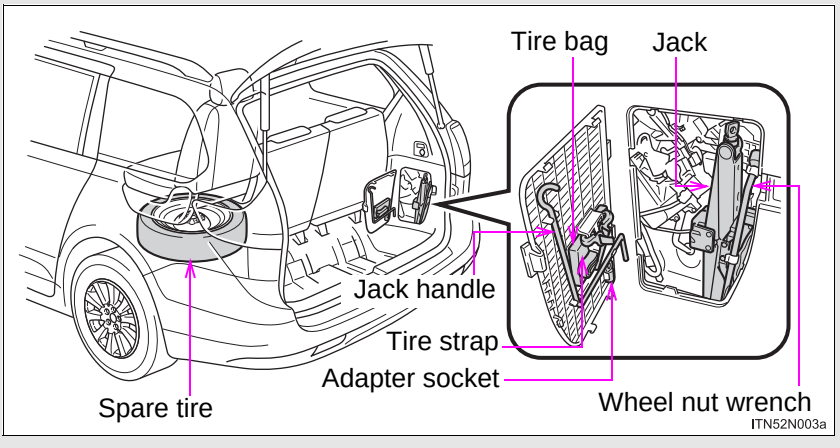

## Taking out the jack and tools

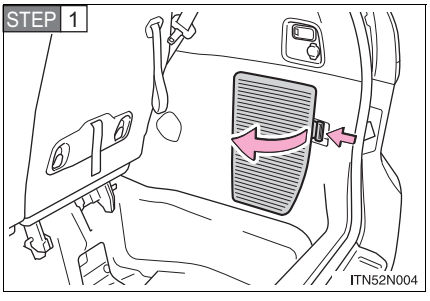


Remove the cover.

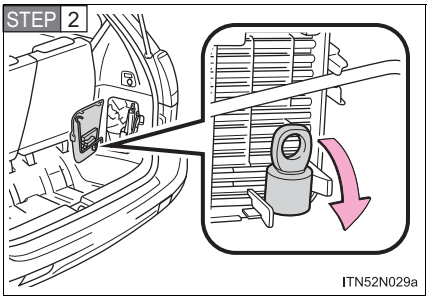


Remove the adapter socket.

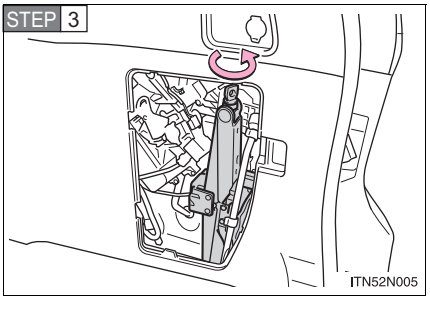


Remove the jack.

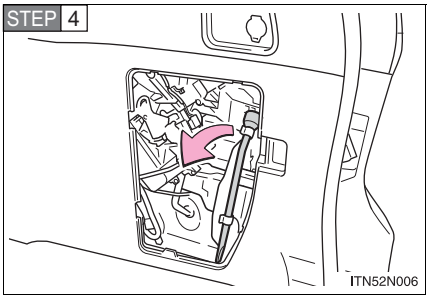


Remove the wheel nut wrench.

## Taking out the spare tire

STEP 1 Slide the front passenger's seat to the front-most lock position and the right side second seat to the rear-most lock position so they will not interfere with the jack handle.

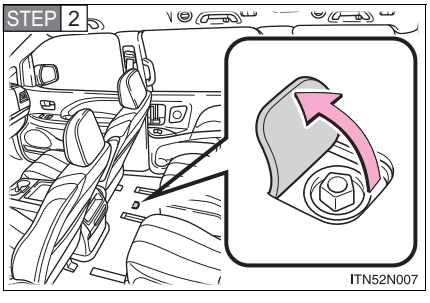


Open the right side sliding door and you will find the flap on the floor. Pull back the flap to find the spare tire clamp bolt.

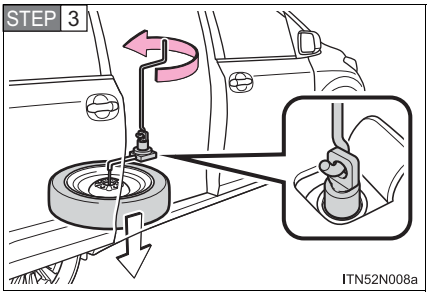


Attach the adapter socket over the spare tire clamp bolt.

Connect the jack handle and the adapter socket. Turn the jack handle.

The tire will be lowered completely to the ground.

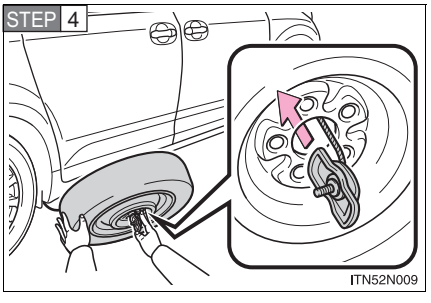


Take the spare tire out from underneath the vehicle and remove the holding bracket.

## Replacing a flat tire

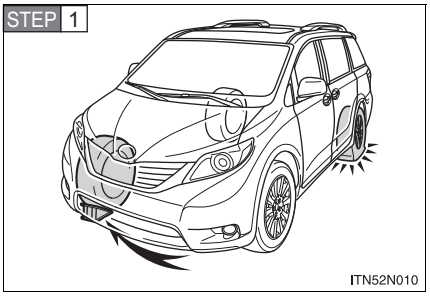


Chock the tires.

| Flat tire | | Wheel chock positions |
|---|---|---|
| Front | Left-hand side | Behind the rear right-hand side tire |
| | Right-hand side | Behind the rear left-hand side tire |
| Rear | Left-hand side | In front of the front right-hand side tire |
| | Right-hand side | In front of the front left-hand side tire |

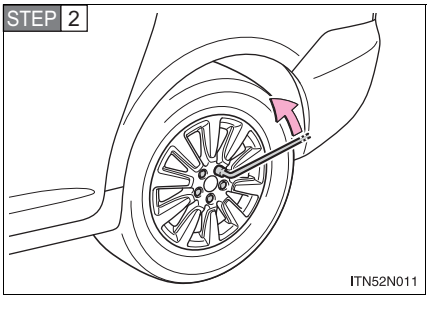


Slightly loosen the wheel nuts (one turn).

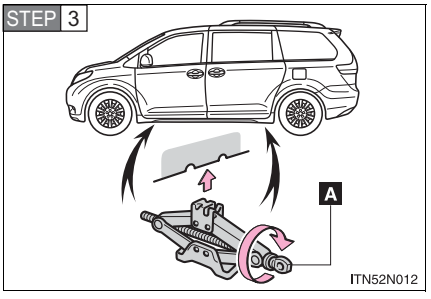


Turn the tire jack portion “A” by hand until the notch of the jack is in contact with the jack point.

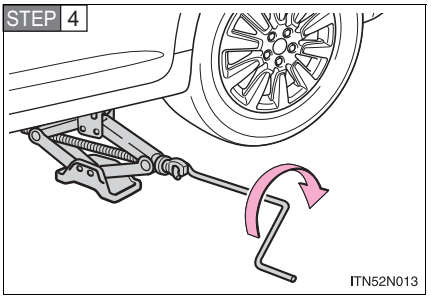


Raise the vehicle until the tire is slightly raised off the ground.

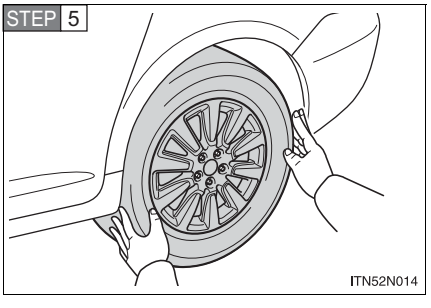


Remove all the wheel nuts and the tire.

When resting the tire on the ground, place the tire so that the wheel design faces up to avoid scratching the wheel surface.

## Installing the spare tire

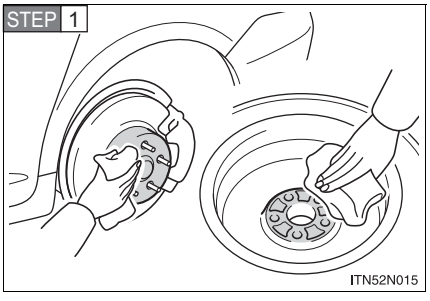


Remove any dirt or foreign matter from the wheel contact surface.

If foreign matter is on the wheel contact surface, the wheel nuts may loosen while the vehicle is in motion, causing the tire to come off.

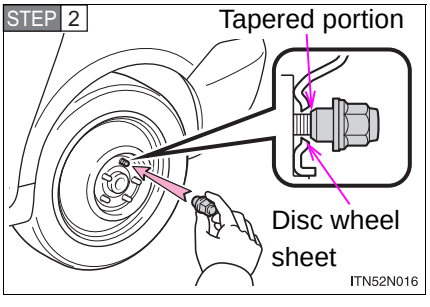


Install the tire and loosely tighten each wheel nut by hand by approximately the same amount.

Tighten the wheel nuts until the tapered portion comes into loose contact with the disc wheel seat.

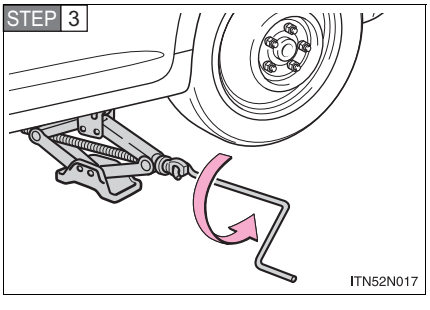


Lower the vehicle.

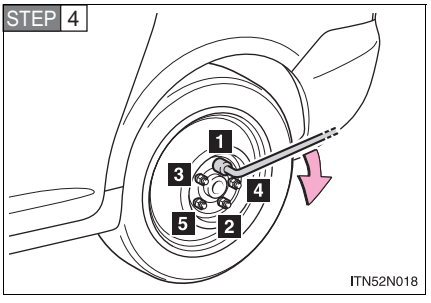


Firmly tighten each wheel nut two or three times in the order shown in the illustration.

**Tightening torque:**
76 ft•lbf (103 N•m, 10.5 kgf•m)

STEP 5 Stow the flat tire, tire jack and all tools.

## Stowing the flat tire

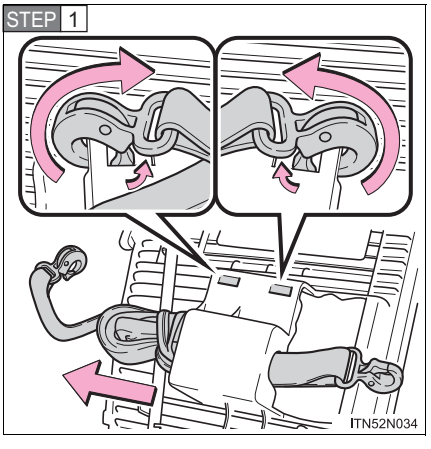


Remove clasps and strap.

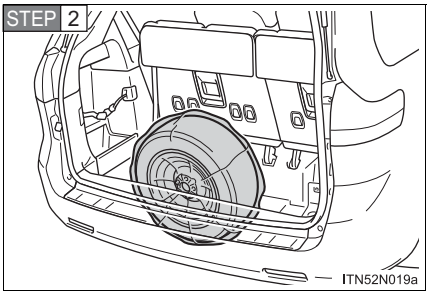


Place tire standing up in rear tub, after putting the tire in the tire bag.

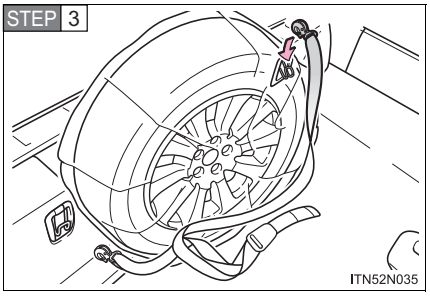


Clip clasp to outboard hook.

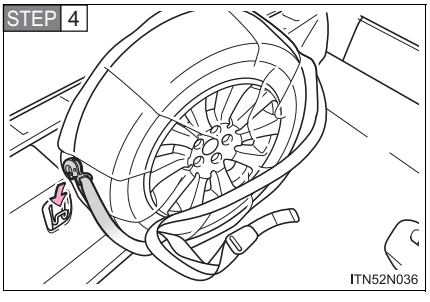


Clip other clasp to center or opposite hook location.

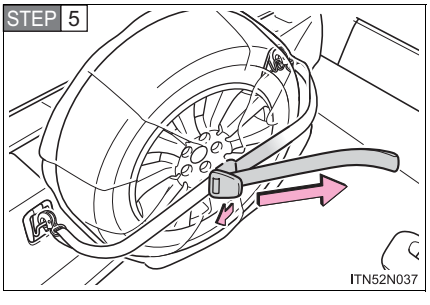


Pull strap to tighten and secure tire.

## ■The compact spare tire

- The compact spare tire is identified by the label “TEMPORARY USE ONLY” on the tire sidewall.
  Use the compact spare tire temporarily, and only in an emergency.
- Make sure to check the tire inflation pressure of the compact spare tire. (→P. 743)

### ■Jack point guide

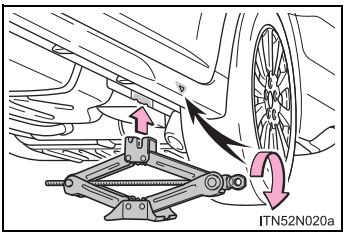


The jack point guides are located on the side of rocker moulding. They indicate the jack point positions.

### ■After completing the tire change

The tire pressure warning system must be reset. (→P. 628)

### ■When using the compact spare tire

As the compact spare tire is not equipped with a tire pressure warning valve and transmitter, low inflation pressure of the spare tire will not be indicated by the tire pressure warning system. Also, if you replace the compact spare tire after the tire pressure warning light comes on, the light remains on.

### ■If you have a flat front tire on a road covered with snow or ice

Install the compact spare tire on one of the rear wheels of the vehicle. Perform the following steps and fit tire chains to the front tires:

STEP 1 Replace a rear tire with the compact spare tire.

STEP 2 Replace the flat front tire with the tire removed from the rear of the vehicle.

STEP 3 Fit tire chains to the front tires.

CAUTION

**When using the compact spare tire**

- Remember that the compact spare tire provided is specifically designed for use with your vehicle. Do not use your compact spare tire on another vehicle.
- Do not use more than one compact spare tire simultaneously.
- Replace the compact spare tire with a standard tire as soon as possible.
- Avoid sudden acceleration, deceleration and braking, as well as sharp cornering.

**When storing the compact spare tire**

Be careful not to catch fingers or other body parts between the compact spare tire and the body of the vehicle.

**When the compact spare tire is attached**

The vehicle speed may not be correctly detected, and the following systems may not operate correctly:

- ABS & Brake assist
- Enhanced VSC
- TRAC
- Dynamic radar cruise control (if equipped)
- Cruise control (if equipped)
- PCS (if equipped)
- Navigation system (if equipped)

Also, not only can the following system not be utilized fully, but it may even negatively affect the drive-train components:

- AWD system (if equipped)

CAUTION

**■ Speed limit when using the compact spare tire**

Do not drive at speeds in excess of 50 mph (80 km/h) when a compact spare tire is installed on the vehicle.

The compact spare tire is not designed for driving at high speeds. Failure to observe this precaution may lead to an accident causing death or serious injury.

**■ Using the tire jack**

Improper use of the tire jack may cause the vehicle to suddenly fall off the jack, leading to death or serious injury.

- Do not use the tire jack for any purpose other than replacing tires or installing and removing tire chains.
- Only use the tire jack that comes with this vehicle for replacing a flat tire. Do not use it on other vehicles, and do not use other tire jacks for replacing tires on this vehicle.
- Always check that the tire jack is securely set to the jack point.
- Do not put any part of your body under the vehicle while it is supported by the jack.
- Do not start or run the engine while your vehicle is supported by the jack.
- Do not raise the vehicle while someone is inside.
- When raising the vehicle, do not put an object on or under the jack.
- Do not raise the vehicle to a height greater than that required to replace the tire.
- Use a jack stand if it is necessary to get under the vehicle.

Take particular care when lowering the vehicle to ensure that no one working on or near the vehicle may be injured.

CAUTION

■ **Replacing a flat tire**

Observe the following precautions to reduce the risk of death or serious injury:

- Do not touch the disc wheels or the area around the brakes immediately after the vehicle has been driven.
  After the vehicle has been driven the disc wheels and the area around the brakes will be extremely hot. Touching these areas with hands, feet or other body parts while changing a tire, etc. may result in burns.
- Remove the spare tire before jacking up the vehicle. If the spare tire is removed after jacking up the vehicle, the tire carrier and the spare tire may interfere with the jack and cause a serious accident.
- Never use oil or grease on the wheel bolts or wheel nuts.
  Oil and grease may cause the wheel nuts to be excessively tightened, leading to bolt or disc wheel damage. In addition, the oil or grease can cause the wheel nuts to loosen and the wheel may fall off, causing a serious accident. Remove any oil or grease from the wheel bolts or wheel nuts.
- Have the wheel nuts tightened with a torque wrench to 76 ft•lbf (103 N•m, 10.5 kgf•m) as soon as possible after changing wheels.
  Failure to follow these precautions could cause the nuts to loosen and the wheel to fall off, resulting in death or serious injury.
- When installing a tire, only use wheel nuts that have been specifically designed for that wheel.
- If there are any cracks or deformations in the bolt screws, nut threads or bolt holes of the wheel, have the vehicle inspected by your Toyota dealer.

Failure to follow these precautions could cause the wheel nuts to loosen and the tore to fall off, resulting on death or serious injury.

■ **When stowing the flat tire**

- Make sure the third seats are in their original position.
- Secure it using a tire strap. Otherwise, the flat tire may fly out in case of sudden braking or an accident, resulting in death or serious injury.

NOTICE

**When loosening or tightening the spare tire clamp bolt**

Do not use an impact wrench. Use the adapter socket and jack handle.

**Do not drive the vehicle with a flat tire**

Do not continue driving with a flat tire.
Driving even a short distance with a flat tire can damage the tire and the wheel beyond repair.

**Be careful when driving over bumps with the compact spare tire installed on the vehicle**

The vehicle becomes lower when driving with the compact spare tire compared to when driving with standard tires. Be careful when driving over uneven road surfaces.

**Driving with tire chains and the compact spare tire**

Do not fit tire chains to the compact spare tire.
Tire chains may damage the vehicle body and adversely affect driving performance.

**When replacing the tires**

When removing or fitting the wheels, tires or the tire pressure warning valve and transmitter, contact your Toyota dealer as the tire pressure warning valve and transmitter may be damaged if not handled correctly.

NOTICE

■ **To avoid damaging to the tire pressure warning valves and transmitters**

Do not use liquid sealants on flat tires.

■ **After taking out or stowing the spare tire**

Make sure to secure the tire carrier by tightening the clamp bolt to prevent the holding bracket from hitting the under body of the vehicle during driving.

■ **Using the tire carrier**

- As the tire carrier is designed for use with the compact spare tire, it cannot be used with standard tires.
- If the spare tire is flat, do not use the tire carrier, as the tire may not be held securely.

# If the engine will not start

**If the engine will not start even though correct starting procedures are being followed (→P. 212, 215), consider each of the following points:**

■ **The engine will not start even though the starter motor operates normally.**

One of the following may be the cause of the problem:

- There may not be sufficient fuel in the vehicle's tank.
  Refuel the vehicle.
- The engine may be flooded.
  Try to restart the engine again following correct starting procedures. (→P. 212, 215)
- There may be a malfunction in the engine immobilizer system (if equipped). (→P. 151)

■ **The starter motor turns over slowly, the interior lights and headlights are dim, or the horn does not sound or sounds at a low volume.**

One of the following may be the cause of the problem:

- The battery may be discharged. (→P. 720)
- The battery terminal connections may be loose or corroded.

■ **The starter motor does not turn over.**

The engine starting system may be malfunctioning due to an electrical problem such as an open circuit or a blown fuse. However, an interim measure is available to start the engine.

■ **The starter motor does not turn over, the interior lights and headlights do not turn on, or the horn does not sound.**

One of the following may be the cause of the problem:

- One or both of the battery terminals may be disconnected.
- The battery may be discharged. (→P. 720)
- There may be a malfunction in the steering lock system (vehicle with a smart key system).

Contact your Toyota dealer if the problem cannot be repaired, or if repair procedures are unknown.

## Emergency start function (vehicles with a smart key system)

When the engine does not start, the following steps can be used as an interim measure to start the engine if the “ENGINE START STOP” switch is functioning normally:

STEP 1 Set the parking brake.

STEP 2 Shift the shift lever to P.

STEP 3 Turn the “ENGINE START STOP” switch to ACCESSORY mode.

STEP 4 Press and hold the “ENGINE START STOP” switch for about 15 seconds while depressing the brake pedal firmly.

Even if the engine can be started using the above steps, the system may be malfunctioning. Have the vehicle inspected by your Toyota dealer.

# If the shift lever cannot be shifted from P

**If the shift lever cannot be shifted with your foot on the brake pedal, there may be a problem with the shift lock system (a system to prevent accidental operation of the shift lever). Have the vehicle inspected by your Toyota dealer immediately.**

**The following steps may be used as an emergency measure to ensure that the shift lever can be shifted:**

STEP 1 Set the parking brake.

STEP 2 Vehicles without a smart key system: Turn the engine switch to the “ACC” position.

Vehicles with a smart key system: Turn the “ENGINE START STOP” switch to ACCESSORY mode.

STEP 3 Depress the brake pedal.

STEP 4

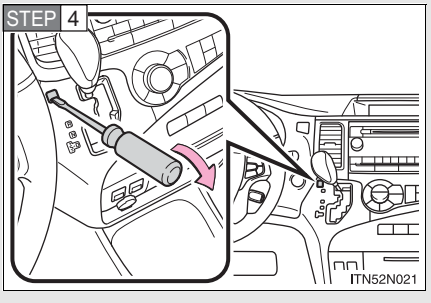


Pry the cover up with a flat-head screwdriver or equivalent tool.

STEP 5

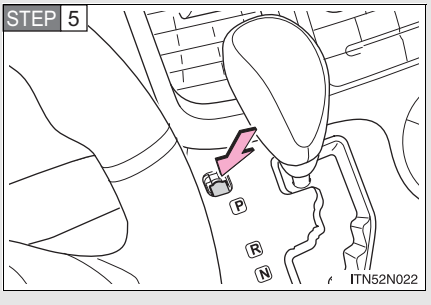


Press the shift lock override button.

The shift lever can be shifted while the button is pressed.

### ■ If the beep sounds continuously when the shift lever is shifted from P (vehicles with an AUTO ACCESS SEAT)

The AUTO ACCESS SEAT may not be locked in place.
For details, refer to “AUTO ACCESS SEAT OWNER’S MANUAL”.

## If you lose your keys/wireless remote control transmitter

**New genuine keys can be made by your Toyota dealer. For vehicles with the smart key system, bring the other key and the key number stamped on the key number plate. For vehicles without the smart key system, bring a master key and the key number stamped on the key number plate.**

# If the electronic key does not operate properly*

**For vehicles with a smart key system: If communication between the electronic key and vehicle is interrupted (→P. 34) or the electronic key cannot be used because the battery is depleted, the smart key system and wireless remote control cannot be used. In such cases, the doors can be opened or the engine can be started by following the procedure below.**

## Locking and unlocking the doors and key linked functions

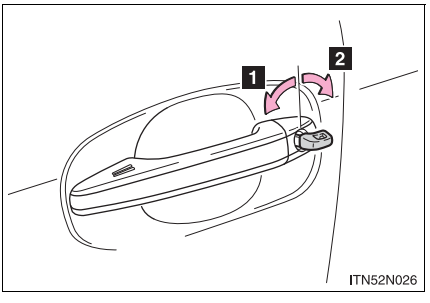


Using the mechanical key (→P. 31) in order to perform the following operations.

1 Locks all doors

2 Unlocks all doors

Turning the key rearward unlocks the driver's door. Turning the key once again within 3 seconds unlocks the other doors.



*: If equipped

## Changing “ENGINE START STOP” switch modes and starting the engine

STEP 1 Shift the shift lever to P and apply the brakes.

STEP 2

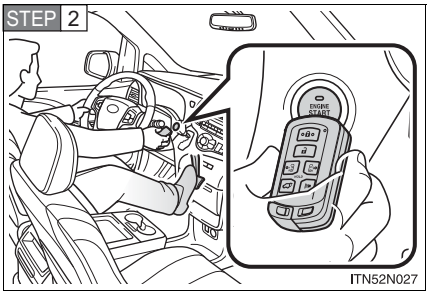


Touch the Toyota emblem side of the electronic key to the “ENGINE START STOP” switch.

An alarm will sound to indicate that the start function cannot detect the electronic key that is touched to the “ENGINE START STOP” switch if any of the doors is opened and closed while the key is touched to the switch.

STEP 3 To change “ENGINE START STOP” switch modes: Within 10 seconds of the buzzer sounding, release the brake pedal and press the “ENGINE START STOP” switch. Modes can be changed each time the switch is pressed. (→P. 216)
To start the engine: Press the “ENGINE START STOP” switch within 10 seconds after the buzzer sounds, keeping the brake pedal depressed.

In the event that the “ENGINE START STOP” switch cannot be operated, contact your Toyota dealer.

### Stopping the engine

Shift the shift lever to P and press the “ENGINE START STOP” switch as you normally do when stopping the engine.

### Replacing the key battery

As this above procedure is a temporary measure, it is recommended that the electronic key battery be replaced immediately when the battery depletes. (→P. 645)

### Alarm

Using the mechanical key to lock the doors will not set the alarm system.
If a door is unlocked using the mechanical key when the alarm system is set, the alarm may be triggered. (→P. 154)

# If the battery is discharged

**The following procedures may be used to start the engine if the vehicle's battery is discharged.**
**You can call your Toyota dealer or qualified repair shop.**

If you have a set of jumper (or booster) cables and a second vehicle with a 12-volt battery, you can jump start your vehicle by following the steps below.

STEP 1 Open the hood. (→P. 604)
Vehicles with a 2GR-FE engine only: Remove the engine cover.

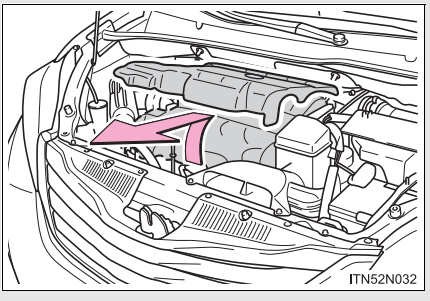


Lift the edge of the cover to fixed pins, and then pull the cover towards you to remove.

STEP 2 Connect the jumper cables according to the following procedures:

**1AR-FE engine**

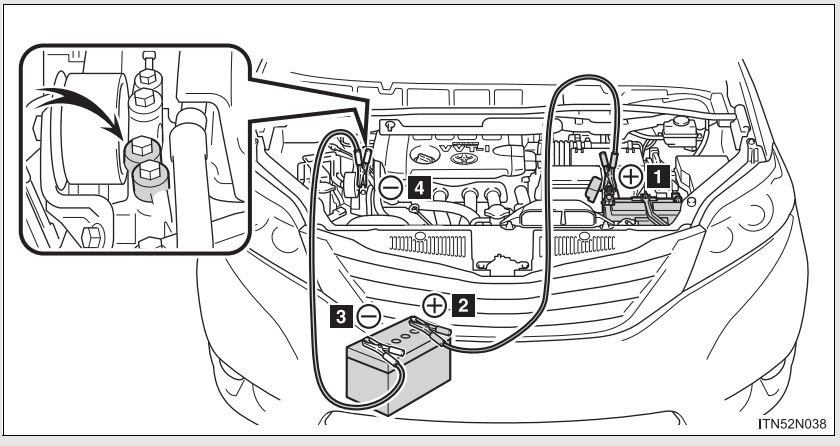


**2GR-FE engine**

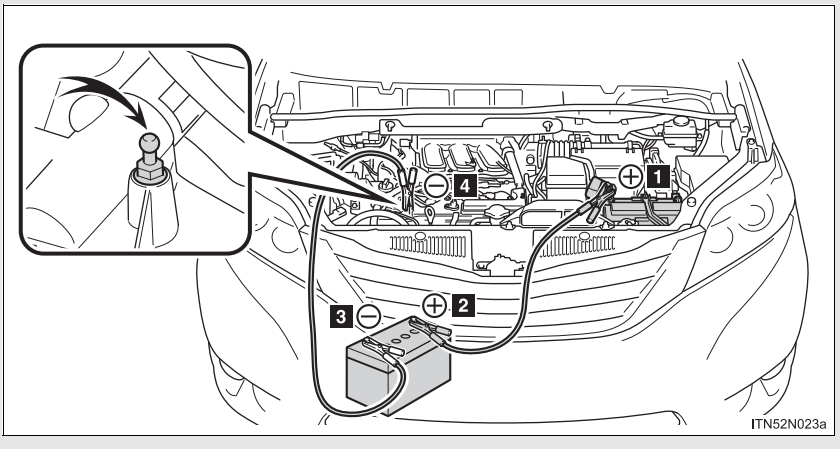


1 Positive (+) battery terminal on your vehicle

2 Positive (+) battery terminal on the second vehicle

3 Negative (-) battery terminal on the second vehicle

4 Connect the clamp at the other end of the negative cable to a solid, stationary, unpainted metallic point away from the battery and any moving parts, as shown in the illustration.

STEP 3 Start the engine of the second vehicle. Increase the engine speed slightly and maintain at that level for approximately 5 minutes to recharge the battery of your vehicle.

STEP 4 Vehicles with a smart key system only: Open and close any of the doors of your vehicle with the “ENGINE START STOP” switch off.

STEP 5 Maintain the engine speed of the second vehicle and start the engine of your vehicle by turning the engine switch to the “ON” position (vehicles without a smart key system) or turning the “ENGINE START STOP” switch to IGNITION ON mode (vehicles with a smart key system).

STEP 6 Once the vehicle’s engine has started, remove the jumper cables in the exact reverse order from which they were connected.

STEP 7 Vehicles with a 2GR-FE engine only: To install the engine cover, conduct the removal procedure in reverse. After installing, check that the fixed pins are inserted securely.

Once the engine starts, have the vehicle inspected at your Toyota dealer as soon as possible.

■ **Starting the engine when the battery is discharged**

The engine cannot be started by push-starting.

■ **To prevent battery discharge**

- Turn off the headlights and the audio system while the engine is off.
- Turn off any unnecessary electrical components when the vehicle is running at a low speed for an extended period, such as in heavy traffic.

■ **When the battery is removed or discharged**

- The power sliding door (if equipped) must be initialized. (→P. 65)
- The power back door (if equipped) must be initialized. (→P. 77)
- The moon roof (if equipped) must be initialized. (→P. 143)

CAUTION

■ **Avoiding battery fires or explosions**

Observe the following precautions to prevent accidentally igniting the flammable gas that may be emitted from the battery:

- Make sure the jumper cable is connected to the correct terminal and that it is not unintentionally in contact with any other than the intended terminal.
- Do not allow the + and - clamps of the jumper cables to come into contact with each other.
- Do not smoke, use matches, cigarette lighters or allow open flame near the battery.

CAUTION

**Battery precautions**

The battery contains poisonous and corrosive acidic electrolyte, while related parts contain lead and lead compounds. Observe the following precautions when handling the battery:

- When working with the battery, always wear safety glasses and take care not to allow any battery fluids (acid) to come into contact with skin, clothing or the vehicle body.
- Do not lean over the battery.
- In the event that battery fluid comes into contact with the skin or eyes, immediately wash the affected area with water and seek medical attention. Place a wet sponge or cloth over the affected area until medical attention can be received.
- Always wash your hands after handling the battery support, terminals, and other battery-related parts.
- Do not allow children near the battery.

NOTICE

**When handling jumper cables**

When connecting the jumper cables, ensure that they do not become entangled in the cooling fans or belt.

**To prevent damage to the engine cover**

- When removing the cover, make sure that you pull the cover towards you after lifting the front edge to remove the fixed pins.
- When installing the cover, do not force the cover or subject it to strong shocks.

# If your vehicle overheats

**If your engine overheats:**

STEP 1 Stop the vehicle in a safe place and turn off the air conditioning system.

STEP 2 Check to see if steam is coming out from under the hood.

If you see steam:

Stop the engine. Carefully lift the hood after the steam subsides and then restart the engine.

If you do not see steam:

Leave the engine running and carefully lift the hood.

STEP 3 Check to see if the cooling fans are operating.

If the fans are operating:

Wait until the temperature of the engine (shown on the instrument cluster) begins to fall and then stop the engine.

If the fans are not operating:

Stop the engine immediately and call your Toyota dealer.

STEP 4

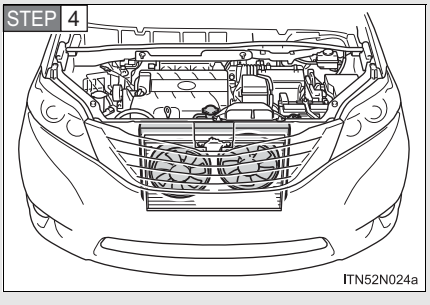


After the engine has cooled down sufficiently, check the engine coolant level and inspect the radiator core (radiator) for any leaks.

STEP 5

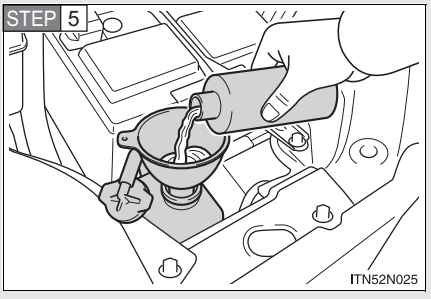


Add engine coolant if necessary.

Water can be used in an emergency if engine coolant is unavailable. (→P. 739)

Have the vehicle inspected at the nearest Toyota dealer as soon as possible.

## ■ Overheating

If you observe the following, your vehicle may be overheating:

- The engine coolant temperature gauge enters the red zone or a loss of power is experienced.
- Steam comes out from under the hood.

CAUTION

**To prevent an accident or injury when inspecting under the hood of your vehicle**

- If steam is seen coming from under the hood, do not open the hood until the steam has subsided. The engine compartment may be very hot, causing serious injuries such as burns.
- Keep hands and clothing away from the fans and drive belt while the engine is running.
- Do not loosen the coolant reservoir cap while the engine and radiator are hot.
  Serious injury, such as burns, may result from hot coolant and steam released under pressure.

NOTICE

**When adding engine coolant**

Wait until the engine has cooled down before adding engine coolant.
When adding coolant, do so slowly. Adding cool coolant to a hot engine too quickly can cause damage to the engine.

# If the vehicle becomes stuck

**Carry out the following procedures if the tires spin or the vehicle becomes stuck in mud, dirt, or snow.**

STEP 1 Stop the engine. Set the parking brake and shift the shift lever to P.

STEP 2 Remove the mud, snow, or sand from around the stuck tire.

STEP 3 Place wood, stones or some other material under the tires to help provide traction.

STEP 4 Restart the engine.

STEP 5 Shift the shift lever to the D or R position and carefully apply the accelerator to free the vehicle.

Turn off TRAC and Enhanced VSC if these functions are hampering your attempts to free the vehicle. (→P. 301)

CAUTION

**When attempting to free a stuck vehicle**

If you choose to push the vehicle back and forth to free it, make sure the surrounding area is clear to avoid striking other vehicles, objects or people. The vehicle may also lunge forward or lunge back suddenly as it becomes free. Use extreme caution.

**When shifting the shift lever**

Be careful not to shift the shift lever with the accelerator pedal depressed. This may lead to unexpected rapid acceleration of the vehicle that may cause an accident resulting in death or serious injury.

NOTICE

**To avoid damaging the transaxle and other components**

- Avoid spinning the wheels and pressing the accelerator pedal more than necessary.
- If the vehicle remains stuck even after these procedures are performed, the vehicle may require towing to be freed.

# If your vehicle has to be stopped in an emergency

**Only in an emergency, such as if it becomes impossible to stop the vehicle in the normal way, stop the vehicle using the following procedure:**

STEP 1 Steadily step on the brake pedal with both feet and firmly depress it.

Do not pump the brake pedal repeatedly as this will increase the effort required to slow the vehicle.

STEP 2 Shift the shift lever to N.

**If the shift lever is shifted to N**

STEP 3 After slowing down, stop the vehicle in a safe place by the road.

STEP 4 Stop the engine.

**If the shift lever cannot be shifted to N**

STEP 3 Keep depressing the brake pedal with both feet to reduce vehicle speed as much as possible.

STEP 4

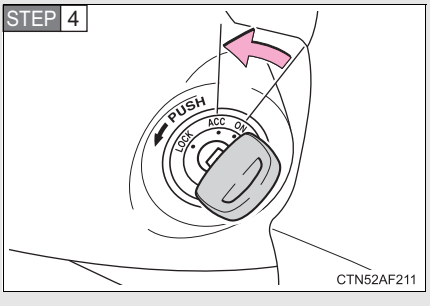


Vehicles without a smart key system: Stop the engine by turning the engine switch to “ACC”.

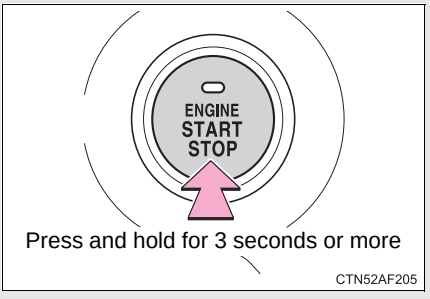


Vehicles with a smart key system: Stop the engine by pressing and holding the “ENGINE START STOP” switch for 3 consecutive seconds or more.

STEP 5 Stop the vehicle in a safe place by the road.

**CAUTION**

**■ If the engine has to be turned off while driving**

- Power assist for the brakes and steering wheel will be lost, making the brake pedal harder to depress and the steering wheel heavier to turn. Decelerate as much as possible before turning off the engine.
- Vehicles without a smart key system: Never attempt to remove the key, as doing so will lock the steering wheel.

# Vehicle specifications 6

**6-1. Specifications**

Maintenance data (fuel, oil level, etc.) ..... 734

Fuel information ..... 746

Tire information ..... 749

**6-2. Customization**

Customizable features ..... 761

**6-3. Initialization**

Items to initialize ..... 768

## Dimensions and weights

| | | | |
|---|---|---|---|
| Overall length | | | 200.2 in. (5085 mm) |
| Overall width | | | 78.1 in. (1985 mm) |
| Overall height*1 | 2WD models | ASL30L-PFTEKA, ASL30L-PRTEKA*2 | 69.5 in (1765 mm) |
| | | GSL30L-PRTSKA*2 | 68.7 in (1745 mm) |
| | | Others | 68.9 in (1750 mm) |
| | AWD models | | 69.5 in. (1765 mm) |
| Wheelbase | | | 119.3 in (3030 mm) |
| Tread | | Front | 67.7 in (1720 mm) |
| | | Rear | 67.7 in (1720 mm) |
| Vehicle capacity weight (Occupants + luggage) | | ASL30L-PFTEKA*2 | 1550 lb. (700 kg) |
| | | ASL30L-PRTEKA*2 | 1575 lb. (710 kg) |
| | | GSL30L-PFTDKA*2 | 1660 lb. (750 kg) |
| | | GSL30L-PFTEKA*2 | 1420 lb. (640 kg) |
| | | GSL30L-PFTQKA*2 | 1325 lb. (600 kg) |
| | | GSL30L-PRTEKA*2 | 1535 lb. (695 kg) |
| | | GSL30L-PRTSKA*2 | 1490 lb. (675 kg) |
| | | GSL30L-PRTQKA*2 | 1390 lb. (630 kg) |
| | | GSL35L-PFTDKA*2 | 1450 lb. (655 kg) |
| | | GSL35L-PFTEKA*2 | 1375 lb. (620 kg) |
| | | GSL35L-PFTQKA*2 | 1190 lb. (535 kg) |

| | | |
|---|---|---|
| Towing capacity (Trailer weight + cargo weight) | 1AR-FE engine | 1000 lb. (454 kg) |
| | 2GR-FE engine | **Without towing package** 1500 lb. (680 kg) **With towing package** 3500 lb. (1588 kg) |

*1: Unladen vehicle
*2: The model code is indicated on the Certification Label. For details, see “Vehicle identification” below.

## Vehicle identification

### ■ Vehicle identification number

The vehicle identification number (VIN) is the legal identifier for your vehicle. This is the primary identification number for your Toyota. It is used in registering the ownership of your vehicle.

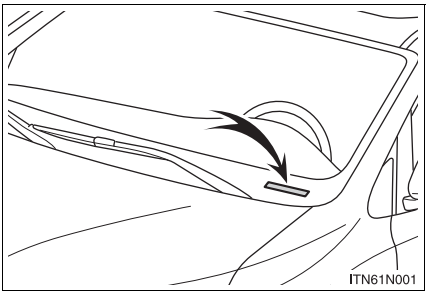


This number is stamped on the top left of the instrument panel.

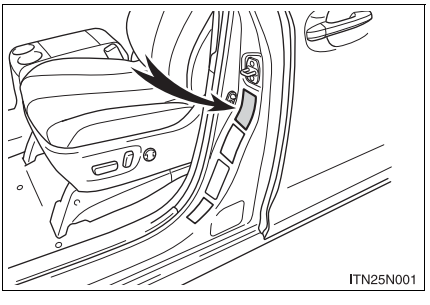


This number is also on the Certification Label on the driver’s side center pillar.

## ■ Engine number

The engine number is stamped on the engine block as shown.

### 1AR-FE engine

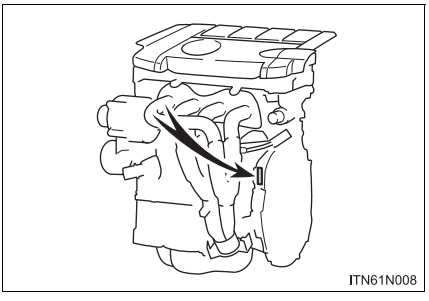


### 2GR-FE engine

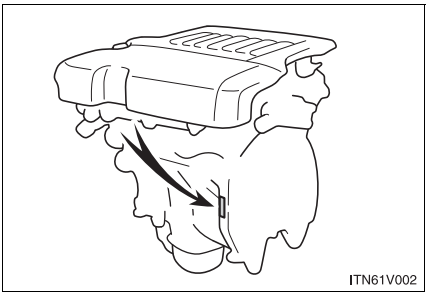

## Engine

| | |
|---|---|
| Model | 1AR-FE, 2GR-FE |
| Type<br>1AR-FE engine<br>2GR-FE engine | <br>4-cylinder in line, 4-cycle, gasoline<br>6-cylinder V type, 4-cycle, gasoline |
| Bore and stroke<br>1AR-FE engine<br>2GR-FE engine | <br>3.54 × 4.13 in. (90.0 × 105.0 mm)<br>3.70 × 3.27 in. (94.0 × 83.0 mm) |
| Displacement<br>1AR-FE engine<br>2GR-FE engine | <br>163.1 cu.in. (2672 $cm^3$)<br>210.9 cu.in. (3456 $cm^3$) |
| Drive belt tension | Automatic adjustment |
| Valve clearance | |

## Fuel

| | |
|---|---|
| Fuel type | Unleaded gasoline only |
| Octane rating | 87 (Research Octane Number 91) or higher |
| Fuel tank capacity | 20.9 gal. (79 L, 17.4 Imp.gal.) |

## Lubrication system

| | |
|---|---|
| Oil capacity<br>Drain and refill<br>(Reference)<br>1AR-FE engine<br><br>2GR-FE engine | <br><br><br>Without filter: 4.2 qt. (4.0 L, 3.5 Imp.qt.)<br>With filter: 4.7 qt. (4.4 L, 3.9 Imp.qt.)<br>Without filter: 6.0 qt. (5.7 L, 5.0 Imp.qt.)<br>With filter: 6.4 qt. (6.1 L, 5.4 Imp.qt.) |

## ■ Engine oil selection

“Toyota Genuine Motor Oil” is used in your Toyota vehicle. Use Toyota approved “Toyota Genuine Motor Oil” or equivalent to satisfy the following grade and viscosity.

Oil grade: ILSAC multigrade engine oil

Recommended viscosity: SAE 0W-20

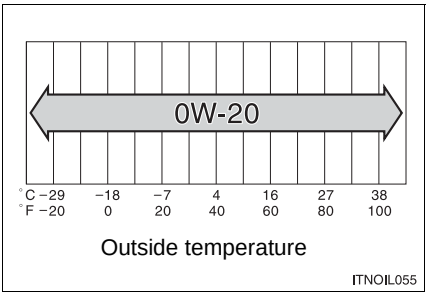


SAE 0W-20 is the best choice for good fuel economy and good starting in cold weather.

If SAE 0W-20 is not available, SAE 5W-20 oil may be used. However, it must be replaced with SAE 0W-20 at the next oil change.

The 0W portion of the oil viscosity rating indicates the characteristic of the oil which allows cold startability. Oils with a lower value before the W allow for easier starting of the engine in cold weather.

The 20 in 0W-20 indicates the oil viscosity when the oil is at its operating temperature. An oil with a higher viscosity may be better suited if the vehicle is operated at high speeds, or under extreme load conditions.

How to read oil container label:

The ILSAC (International Lubricant Standardization and Approval Committee) Certification Mark is added to some oil containers to help you select the oil you should use.

## Cooling system

| | |
|---|---|
| Capacity<br>1AR-FE engine<br>2GR-FE engine | 9.2 qt. (8.7 L, 7.7 Imp.qt.)<br>**Without towing package**<br>11.0 qt. (10.4 L, 9.2 Imp.qt.)<br>**With towing package**<br>11.7 qt. (11.1 L, 9.8 Imp.qt.) |
| Coolant type | Use either of the following.<br>• “Toyota Super Long Life Coolant”<br>• A similar high-quality ethylene glycol-based non-silicate, non-amine, non-nitrite, and non-borate coolant with long-life hybrid organic acid technology<br>Do not use plain water alone. |

## Ignition system

| | |
|---|---|
| Spark plug | |
| Make DENSO | |
| 1AR-FE engine | SK16HR11 |
| 2GR-FE engine | FK20HR11 |
| Gap | 0.043 in. (1.1 mm) |

NOTICE

**Iridium-tipped spark plugs**

Use only iridium-tipped spark plugs. Do not adjust spark plug gap.

## Electrical system

| | |
|---|---|
| Battery<br><br>Open voltage* at 68°F (20°C): | 12.6 — 12.8 V Fully charged<br>12.2 — 12.4 V Half charged<br>11.8 — 12.0 V Discharged<br>(*: Voltage checked 20 minutes after the engine and all the lights turned off) |
| Charging rates | 5 A max. |

## Automatic transaxle

| | |
|---|---|
| Fluid capacity*<br>2WD models<br>AWD models | <br>6.9 qt. (6.5 L, 5.7 Imp.qt.)<br>7.1 qt. (6.7 L, 5.9 Imp.qt.) |
| Fluid type | Toyota Genuine ATF WS |

*: The fluid capacity is a reference quantity. If replacement is necessary, contact your Toyota dealer.

NOTICE

**Transmission fluid type**

Using transmission fluid other than “Toyota Genuine ATF WS” may cause deterioration in shift quality, locking up of your transmission accompanied by vibration and, ultimately, damage to the vehicle’s transmission.

## Transfer (AWD models)

| | |
|---|---|
| Oil capacity | 0.85 qt. (0.80 L, 0.70 Imp.qt.) |
| Oil type and viscosity | Toyota Genuine Differential Gear Oil LT<br>SAE 75W-85 GL-5 or equivalent |

“Toyota Genuine Differential Gear Oil” is filled in your Toyota vehicle at the factory fill. Use Toyota approved “Toyota Genuine Differential Gear Oil” or an equivalent oil of matching quality to satisfy the above specification. Please contact your Toyota dealer for further details.

## Rear differential (AWD models)

| | |
|---|---|
| Oil capacity | 0.53 qt. (0.50 L, 0.44 Imp.qt.) |
| Oil type and viscosity | Toyota Genuine Differential Gear Oil LT<br>SAE 75W-85 GL-5 or equivalent |

“Toyota Genuine Differential Gear Oil” is filled in your Toyota vehicle at the factory fill. Use Toyota approved “Toyota Genuine Differential Gear Oil” or an equivalent oil of matching quality to satisfy the above specification. Please contact your Toyota dealer for further details.

## Brakes

| | |
|---|---|
| Pedal clearance*1 | 2.99 in. (76 mm) |
| Pedal free play | 0.04 — 0.24 in. (1 — 6 mm) |
| Brake pad wear limit | 0.04 in. (1.0 mm) |
| Parking brake lining wear limit | 0.04 in. (1.0 mm) |
| Parking brake pedal travel*2 | 3 — 6 clicks |
| Fluid type | SAE J1703 or FMVSS No.116 DOT 3 |

*1: Minimum pedal clearance when depressed with a force of 110 lbf (490 N, 50 kgf) while the engine is running

*2: Parking brake pedal travel when depressed with a force of 67.4 lbf (300 N, 30.6 kgf)

## Chassis lubrication (AWD models)

| | |
|---|---|
| Propeller shafts | |
| Spider | Lithium base chassis grease, NLGI No.2 |
| Slide yoke | Molybdenum-disulfide lithium base chassis grease, NLGI No.2 or lithium base chassis grease, NLGI No.2 |

## Steering

| | |
|---|---|
| Free play | Less than 1.2 in. (30 mm) |

## Tires and wheels

### 17-inch tires

| | |
|---|---|
| Tire size | P235/60R17 100T,<br>T155/80R17 101M (spare) |
| Tire inflation pressure (Recommended cold tire inflation pressure) | Front: 35 psi (240 kPa, 2.4 kgf/cm$^2$ or bar)<br>Rear: 35 psi (240 kPa, 2.4 kgf/cm$^2$ or bar)<br>Spare: 60 psi (420 kPa, 4.2 kgf/cm$^2$ or bar) |
| Wheel size | 17 x 7J, 17 x 4T (spare) |
| Wheel nut torque | 76 ft•lbf (103 N•m, 10.5 kgf•m) |

### 18-inch tires

| | |
|---|---|
| Tire size | P235/55R18 99V, P235/55RF18 99T,<br>T155/80R17 101M (spare) |
| Tire inflation pressure (Recommended cold tire inflation pressure) | Front: 35 psi (240 kPa, 2.4 kgf/cm$^2$ or bar)<br>Rear: 35 psi (240 kPa, 2.4 kgf/cm$^2$ or bar)<br>Vehicles without run-flat tires:<br>Spare: 60 psi (420 kPa, 4.2 kgf/cm$^2$ or bar) |
| Wheel size | 18 x 7J, 17 x 4T (spare) |
| Wheel nut torque | 76 ft•lbf (103 N•m, 10.5 kgf•m) |

### 19-inch tires

| | |
|---|---|
| Tire size | P235/50R19 99V,<br>T155/80R17 101M (spare) |
| Tire inflation pressure (Recommended cold tire inflation pressure) | Front: 36 psi (250 kPa, 2.5 kgf/cm$^2$ or bar)<br>Rear: 36 psi (250 kPa, 2.5 kgf/cm$^2$ or bar)<br>Spare:60 psi (420 kPa, 4.2 kgf/cm$^2$ or bar) |
| Wheel size | 19 x 7J, 17 x 4T (spare) |
| Wheel nut torque | 76 ft•lbf (103 N•m, 10.5 kgf•m) |

## Light bulbs

| | Light Bulbs | Bulb No. | W | Type |
|---|---|---|---|---|
| Exterior | Headlights (low beam)<br>Discharge bulbs<br>Halogen bulbs | <br>—<br>— | <br>35<br>55 | <br>A<br>B |
| | Headlights (high beam) | 9005 | 60 | C |
| | Front fog lights | — | 55 | B |
| | Front turn signal/parking/side marker lights | 3457NAK | 30/8 | E |
| | Rear turn signal lights | WY21W | 21 | E |
| | Tail lights | W5W | 5 | D |
| | Back-up lights | 921 | 16 | D |
| | License plate lights | W5W | 5 | D |
| | Outer foot lights | W6W | 6 | D |
| Interior | Front personal/interior lights | W5W | 5 | D |
| | Rear personal/interior lights | W5W | 5 | D |
| | Luggage compartment light | — | 5 | F |
| | Vanity lights | — | 2.8 | F |
| | Front door courtesy lights | — | 5 | D |

A: D4S discharge bulbs
B: H11 halogen bulbs
C: HB3 halogen bulbs
D: Wedge base bulbs (clear)
E: Wedge base bulbs (amber)
F: Double end bulbs

# Fuel information

**You must only use unleaded gasoline in your vehicle.**
**Select octane rating 87 (Research Octane Number 91) or higher. Use of unleaded gasoline with an octane rating lower than 87 may result in engine knocking. Persistent knocking can lead to engine damage.**

At minimum, the gasoline you use should meet the specifications of ASTM D4814 in the U.S.A. and CGSB3.5-M93 in Canada.

## ■ Fuel tank opening for unleaded gasoline

To help prevent incorrect fueling, your Toyota has a fuel tank opening that only accommodates the special nozzle on unleaded fuel pumps.

## ■ Gasoline quality

In very few cases, driveability problems may be caused by the brand of gasoline you are using. If driveability problems persist, try changing the brand of gasoline. If this does not correct the problem, consult your Toyota dealer.

## ■ Gasoline quality standards

- Automotive manufacturers in the U.S.A., the Europe and Japan have developed a specification for fuel quality called World-Wide Fuel Charter (WWFC), which is expected to be applied worldwide.
- The WWFC consists of four categories that are based on required emission levels. In the U.S., category 4 has been adopted.
- The WWFC improves air quality by lowering emissions in vehicle fleets, and improves customer satisfaction through better performance.

### Recommendation of the use of gasoline containing detergent additives

- Toyota recommends the use of gasoline that contains detergent additives to avoid build-up of engine deposits.
- All gasoline sold in the U.S.A. contains detergent additives to clean and/or keep clean intake systems.

### Recommendation of the use of cleaner burning gasoline

Cleaner burning gasoline, including reformulated gasoline that contains oxygenates such as ethanol or MTBE (Methyl Tertiary Butyl Ether) is available in many areas.

Toyota recommends the use of cleaner burning gasoline and appropriately blended reformulated gasoline. These types of gasoline provide excellent vehicle performance, reduce vehicle emissions and improve air quality.

### Non-recommendation of the use of blended gasoline

- Toyota allows the use of oxygenate blended gasoline where the oxygenate content is up to 10 % ethanol or 15 % MTBE.
- If you use gasohol in your vehicle, be sure that it has an octane rating no lower than 87.
- Toyota does not recommend the use of gasoline containing methanol.

### Non-recommendation of the use of gasoline containing MMT

Some gasoline contains an octane enhancing additive called MMT (Methylcyclopentadienyl Manganese Tricarbonyl).

Toyota does not recommend the use of gasoline that contains MMT. If fuel containing MMT is used, your emission control system may be adversely affected.

The malfunction indicator lamp on the instrument panel may come on. If this happens, contact your Toyota dealer for service.

### If your engine knocks

- Consult your Toyota dealer.
- You may occasionally notice light knocking for a short time while accelerating or driving uphill. This is normal and there is no need for concern.

NOTICE

**Notice on fuel quality**

- Do not use improper fuels. If improper fuels are used, the engine will be damaged.
- Do not use leaded gasoline.
  Leaded gasoline can cause damage to your vehicle's catalytic converters causing the emission control system to malfunction.
- Do not use gasohol other than that stated here.
  Other gasohol may cause fuel system damage or vehicle performance problems.
- Using unleaded gasoline with an octane number or rating lower than the level previously stated will cause persistent heavy knocking.
  At worst, this will lead to engine damage.

**Fuel-related poor driveability**

If poor driveability is encountered after using a different type of fuel (poor hot starting, vaporization, engine knocking, etc.), discontinue the use of that type of fuel.

**When refueling with gasohol**

Take care not to spill gasohol. It can damage your vehicle's paint.

### Typical tire symbols

### Run-flat tire or standard tire

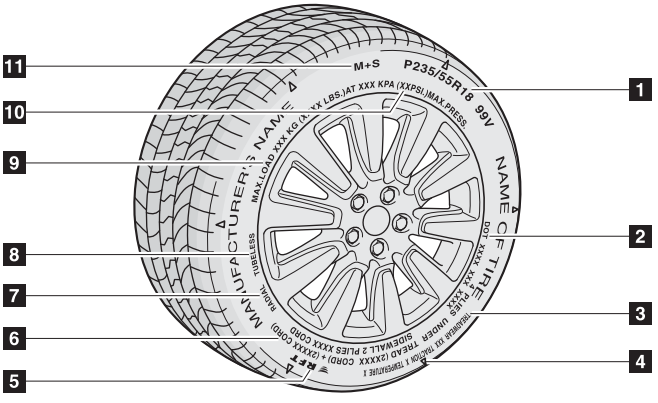


### Compact spare tire

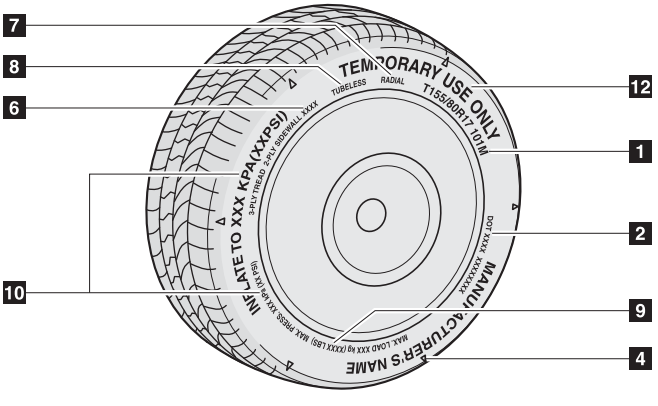


1 Tire size (→P. 752)

2 DOT and Tire Identification Number (TIN) (→P. 751)

3 Uniform tire quality grading

For details, see “Uniform Tire Quality Grading” that follows.

4 Location of treadwear indicators (→P. 626)

**5** Run-flat tire (RFT) or standard tire (→P. 695)

This vehicle can be equipped with either run-flat tires (RFT) or standard tires. An “RFT” or “DSST” mark is molded on the sidewall of the run-flat tire.

**6** Tire ply composition and materials

Plies are layers of rubber-coated parallel cords. Cords are the strands which form the plies in a tire.

**7** Radial tires or bias-ply tires

A radial tire has “RADIAL” on the sidewall. A tire not marked “RADIAL” is a bias-ply tire.

**8** TUBELESS or TUBE TYPE

A tubeless tire does not have a tube and air is directly put into the tire. A tube type tire has a tube inside the tire and the tube maintains the air pressure.

**9** Load limit at maximum cold tire inflation pressure (→P. 631)

**10** Maximum cold tire inflation pressure (→P. 743)

This means the pressure to which a tire may be inflated.

**11** Summer tires or all season tires (→P. 631)

An all season tire has “M+S” on the sidewall. A tire not marked “M+S” is a summer tire.

**12** “TEMPORARY USE ONLY” (→P. 704)

A compact spare tire is identified by the phrase “TEMPORARY USE ONLY” molded on its sidewall. This tire is designed for temporary emergency use only.

## Typical DOT and Tire Identification Number (TIN)

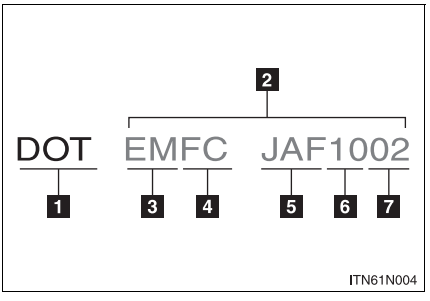


1 DOT symbol*

2 Tire Identification Number (TIN)

3 Tire manufacturer's identification mark

4 Tire size code

5 Manufacturer's optional tire type code (3 or 4 letters)

6 Manufacturing week

7 Manufacturing year

*: The DOT symbol certifies that the tire conforms to applicable Federal Motor Vehicle Safety Standards.

## Tire size

### Typical tire size information

The illustration indicates typical tire size.

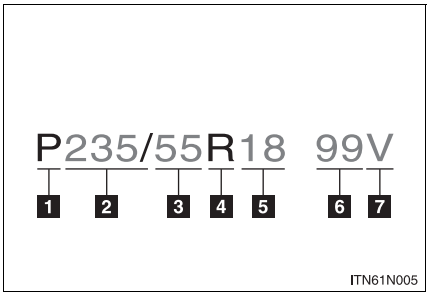


1. Tire use
   (P = Passenger car,
   T = Temporary use)
2. Section width (millimeters)
3. Aspect ratio
   (tire height to section width)
4. Tire construction code
   (R = Radial, D = Diagonal)
5. Wheel diameter (inches)
6. Load index (2 or 3 digits)
7. Speed symbol
   (alphabet with one letter)
8. Run-flat tire code

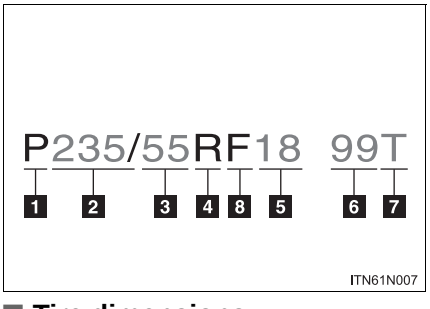


### Tire dimensions

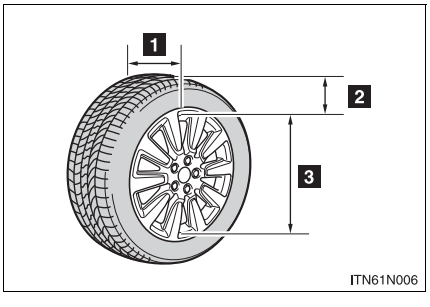


1. Section width
2. Tire height
3. Wheel diameter

## Tire section names

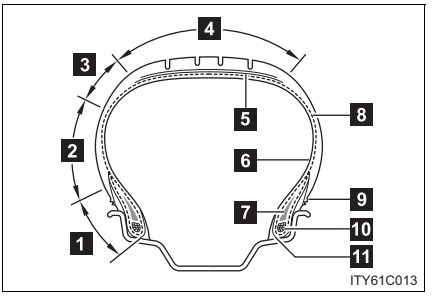


1 Bead
2 Sidewall
3 Shoulder
4 Tread
5 Belt
6 Inner liner
7 Reinforcing rubber
8 Carcass
9 Rim lines
10 Bead wires
11 Chafer

## Uniform Tire Quality Grading

This information has been prepared in accordance with regulations issued by the National Highway Traffic Safety Administration of the U.S. Department of Transportation.
It provides the purchasers and/or prospective purchasers of Toyota vehicles with information on uniform tire quality grading.

Your Toyota dealer will help answer any questions you may have as you read this information.

### DOT quality grades

All passenger vehicle tires must conform to Federal Safety Requirements in addition to these grades. Quality grades can be found where applicable on the tire sidewall between tread shoulder and maximum section width.

For example: Treadwear 200 Traction AA Temperature A

### Treadwear

The treadwear grade is a comparative rating based on the wear rate of the tire when tested under controlled conditions on a specified government test course.

For example, a tire graded 150 would wear one and a half (1-1/2) times as well on the government course as a tire graded 100.
The relative performance of tires depends upon the actual conditions of their use, performance may differ significantly from the norm due to variations in driving habits, service practices and differences in road characteristics and climate.

### Traction AA, A, B, C

The traction grades, from highest to lowest, are AA, A, B and C, and they represent the tire's ability to stop on wet pavement as measured under controlled conditions on specified government test surfaces of asphalt and concrete.

A tire marked C may have poor traction performance.

Warning: The traction grade assigned to this tire is based on braking (straight ahead) traction tests and does not include cornering (turning) traction.

### Temperature A, B, C

The temperature grades are A (the highest), B, and C, representing the tire's resistance to the generation of heat and its ability to dissipate heat when tested under controlled conditions on a specified indoor laboratory test wheel.

Sustained high temperature can cause the material of the tire to degenerate and reduce tire life, and excessive temperature can lead to sudden tire failure.

The grade C corresponds to a level of performance which all passenger car tires must meet under the Federal Motor Vehicle Safety Standard No. 109.

Grades B and A represent higher levels of performance on the laboratory test wheel than the minimum required by law.

Warning: The temperature grades of a tire assume that it is properly inflated and not overloaded.
Excessive speed, underinflation, or excessive loading, either separately or in combination, can cause heat buildup and possible tire failure.

## Glossary of tire terminology

| Tire related term | Meaning |
|---|---|
| Cold tire inflation pressure | Tire pressure when the vehicle has been parked for three hours or more, or has not been driven more than 1 mile or 1.5 km under that condition |
| Maximum inflation pressure | The maximum cold inflated pressure to which a tire may be inflated, shown on the sidewall of the tire |
| Recommended inflation pressure | Cold tire inflation pressure recommended by a manufacturer |
| Accessory weight | The combined weight (in excess of those standard items which may be replaced) of automatic transmission, power steering, power brakes, power windows, power seats, radio and heater, to the extent that these items are available as factory-installed equipment (whether installed or not) |
| Curb weight | The weight of a motor vehicle with standard equipment, including the maximum capacity of fuel, oil and coolant, and if so equipped, air conditioning and additional weight optional engine |
| Maximum loaded vehicle weight | The sum of:<br>(a) Curb weight<br>(b) Accessory weight<br>(c) Vehicle capacity weight<br>(d) Production options weight |

| Tire related term | Meaning |
|---|---|
| Normal occupant weight | 150 lb. (68 kg) times the number of occupants specified in the second column of Table 1* that follows |
| Occupant distribution | Distribution of occupants in a vehicle as specified in the third column of Table 1* below |
| Production options weight | The combined weight of installed regular production options weighing over 5 lb. (2.3 kg) in excess of the standard items which they replace, not previously considered in curb weight or accessory weight, including heavy duty brakes, ride levelers, roof rack, heavy duty battery, and special trim |
| Rim | A metal support for a tire or a tire and tube assembly upon which the tire beads are seated |
| Rim diameter (Wheel diameter) | Nominal diameter of the bead seat |
| Rim size designation | Rim diameter and width |
| Rim type designation | The industry manufacturer's designation for a rim by style or code |
| Rim width | Nominal distance between rim flanges |
| Vehicle capacity weight (Total load capacity) | The rated cargo and luggage load plus 150 lb. (68 kg) times the vehicle's designated seating capacity |
| Vehicle maximum load on the tire | The load on an individual tire that is determined by distributing to each axle its share of the maximum loaded vehicle weight, and dividing by two |
| Vehicle normal load on the tire | The load on an individual tire that is determined by distributing to each axle its share of curb weight, accessory weight, and normal occupant weight (distributed in accordance with Table 1* below), and dividing by two |

| Tire related term | Meaning |
|---|---|
| Weather side | The surface area of the rim not covered by the inflated tire |
| Bead | The part of the tire that is made of steel wires, wrapped or reinforced by ply cords and that is shaped to fit the rim |
| Bead separation | A breakdown of the bond between components in the bead |
| Bias ply tire | A pneumatic tire in which the ply cords that extend to the beads are laid at alternate angles substantially less than 90 degrees to the centerline of the tread |
| Carcass | The tire structure, except tread and sidewall rubber which, when inflated, bears the load |
| Chunking | The breaking away of pieces of the tread or sidewall |
| Cord | The strands forming the plies in the tire |
| Cord separation | The parting of cords from adjacent rubber compounds |
| Cracking | Any parting within the tread, sidewall, or innerliner of the tire extending to cord material |
| CT | A pneumatic tire with an inverted flange tire and rim system in which the rim is designed with rim flanges pointed radially inward and the tire is designed to fit on the underside of the rim in a manner that encloses the rim flanges inside the air cavity of the tire |
| Extra load tire | A tire designed to operate at higher loads and at higher inflation pressures than the corresponding standard tire |
| Groove | The space between two adjacent tread ribs |
| Innerliner | The layer(s) forming the inside surface of a tubeless tire that contains the inflating medium within the tire |

| Tire related term | Meaning |
|---|---|
| Innerliner separation | The parting of the innerliner from cord material in the carcass |
| Intended outboard sidewall | (a) The sidewall that contains a whitewall, bears white lettering, or bears manufacturer, brand, and/or model name molding that is higher or deeper than the same molding on the other sidewall of the tire, or<br>(b) The outward facing sidewall of an asymmetrical tire that has a particular side that must always face outward when mounted on a vehicle |
| Light truck (LT) tire | A tire designated by its manufacturer as primarily intended for use on lightweight trucks or multipurpose passenger vehicles |
| Load rating | The maximum load that a tire is rated to carry for a given inflation pressure |
| Maximum load rating | The load rating for a tire at the maximum permissible inflation pressure for that tire |
| Maximum permissible inflation pressure | The maximum cold inflation pressure to which a tire may be inflated |
| Measuring rim | The rim on which a tire is fitted for physical dimension requirements |
| Open splice | Any parting at any junction of tread, sidewall, or innerliner that extends to cord material |
| Outer diameter | The overall diameter of an inflated new tire |
| Overall width | The linear distance between the exteriors of the sidewalls of an inflated tire, including elevations due to labeling, decorations, or protective bands or ribs |
| Passenger car tire | A tire intended for use on passenger cars, multipurpose passenger vehicles, and trucks, that have a gross vehicle weight rating (GVWR) of 10,000 lb. or less |

| Tire related term | Meaning |
|---|---|
| Ply | A layer of rubber-coated parallel cords |
| Ply separation | A parting of rubber compound between adjacent plies |
| Pneumatic tire | A mechanical device made of rubber, chemicals, fabric and steel or other materials, that, when mounted on an automotive wheel, provides the traction and contains the gas or fluid that sustains the load |
| Radial ply tire | A pneumatic tire in which the ply cords that extend to the beads are laid at substantially 90 degrees to the centerline of the tread |
| Reinforced tire | A tire designed to operate at higher loads and at higher inflation pressures than the corresponding standard tire |
| Section width | The linear distance between the exteriors of the sidewalls of an inflated tire, excluding elevations due to labeling, decoration, or protective bands |
| Sidewall | That portion of a tire between the tread and bead |
| Sidewall separation | The parting of the rubber compound from the cord material in the sidewall |
| Snow tire | A tire that attains a traction index equal to or greater than 110, compared to the ASTM E-1136 Standard Reference Test Tire, when using the snow traction test as described in ASTM F-1805-00, Standard Test Method for Single Wheel Driving Traction in a Straight Line on Snow-and Ice-Covered Surfaces, and which is marked with an Alpine Symbol ( ) on at least one sidewall |
| Test rim | The rim on which a tire is fitted for testing, and may be any rim listed as appropriate for use with that tire |

| Tire related term | Meaning |
|---|---|
| Tread | That portion of a tire that comes into contact with the road |
| Tread rib | A tread section running circumferentially around a tire |
| Tread separation | Pulling away of the tread from the tire carcass |
| Treadwear indicators (TWI) | The projections within the principal grooves designed to give a visual indication of the degrees of wear of the tread |
| Wheel-holding fixture | The fixture used to hold the wheel and tire assembly securely during testing |

*: Table 1 — Occupant loading and distribution for vehicle normal load for various designated seating capacities

| Designated seating capacity, Number of occupants | Vehicle normal load, Number of occupants | Occupant distribution in a normally loaded vehicle |
|---|---|---|
| 2 through 4 | 2 | 2 in front |
| 5 through 10 | 3 | 2 in front, 1 in second seat |
| 11 through 15 | 5 | 2 in front, 1 in second seat, 1 in third seat, 1 in fourth seat |
| 16 through 20 | 7 | 2 in front, 2 in second seat, 2 in third seat, 1 in fourth seat |

# Customizable features

**Your vehicle includes a variety of electronic features that can be personalized to suit your preferences. Programming these preferences requires specialized equipment and may be performed by your Toyota dealer.**

Some function settings are changed simultaneously with other functions being customized. Contact your Toyota dealer for further details.

| Item | Function | Default setting | Customized setting |
|---|---|---|---|
| Smart key system and wireless remote control (→P. 34, 52) | Unlocking operation* | Drivers door unlocked in one step, all doors unlocked in two steps | All doors unlocked in one step |
| | Automatic door lock function to be activated if door is not opened after being unlocked* | On | Off |
| | Time elapsed before automatic door lock function is activated if door is not opened after being unlocked* | 60 seconds | 30 seconds |
| | | | 120 seconds |
| | Operation signal* (Emergency flashers) | On | Off |
| | Operation signal (Buzzer) | On | Off |
| | Open door warning function (when locking the vehicle) | On | Off |

| Item | Function | Default setting | Customized setting |
|---|---|---|---|
| Wireless remote control (→P. 52) | Wireless remote control | On | Off |
| | Operation signal (Buzzer volume) | Level 7 | Level 1 to 6 |
| | | | Off |
| | Panic function | On | Off |
| | Power sliding door operation | On | Off |
| | | Press and hold | Press twice |
| | | | One short press |
| | Power back door operation | On | Off |
| | | Press and hold | Press twice |
| | | | One short press |
| Smart key system (→P. 34) | Smart key system | On | Off |
| | Number of permissible times of continuous smart lock | Twice | Unlimited |
| Door lock (→P. 59) | Unlocking using a key | Drivers door unlocked in one step, all doors unlocked in two steps | All doors unlocked in one step |
| | Speed-detecting automatic door lock function* | Off | On |
| | Opening drivers door unlocks all doors* | Off | On |

| Item | Function | Default setting | Customized setting |
|---|---|---|---|
| Door lock (→P. 59) | Shifting gears to P unlocks all doors* | On | Off |
| | Shifting gears to position other than P locks all doors* | On | Off |
| Power sliding door (if equipped) (→P. 65) | Operation signal (buzzer) | Off | On |
| | Opening and closing operation | One short push | Push and hold |
| Automatic light control system (→P. 251) | Time elapsed before headlights automatically turn off after doors are closed* | 30 seconds | 0 second |
| | | | 60 seconds |
| | | | 90 seconds |
| | Daytime running light system (U.S.A. only) | On | Off |
| | Light sensor sensitivity | Level 3 | Level 1 to 5 |
| | Automatic High Beam (if equipped)* | On | Off |
| Alarm system (→P. 154) | Time elapsed before the alarm is set | 14 seconds | 30 seconds |
| Multi-information display (→P. 237) | Language selection* | English | French |
| | | | Spanish |

| Item | Function | Default setting | Customized setting |
|---|---|---|---|
| Illumination (→P. 524) | Time elapsed before lights turn off | 15 seconds | 7.5 seconds |
| | | | 30 seconds |
| | Operation when the doors are unlocked | On | Off |
| | Operation after the engine switch is turned to the “LOCK” position | On | Off |
| | Rear ceiling light | On | Off |
| | Outer foot lights | On | Off |
| Intuitive parking assist (→P. 288) | Buzzer volume | Max. | Min. to Max. |
| Seat belt reminder (→P. 684) | Vehicle speed linked seat belt reminder buzzer | On | Off |

*: For vehicles with the multi-information display, the setting can be changed by operating the multi-information display. (→P. 765)

## Customizing the features by using the multi-information display

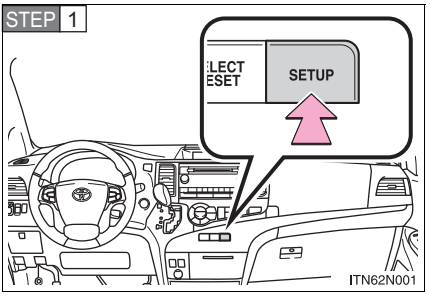


Press the “SETUP” button while the vehicle is stopped.

The “Custom Settings” screen is displayed on the multi-information display.

If left idle for approximately 20 seconds, the display will return to the previous screen.

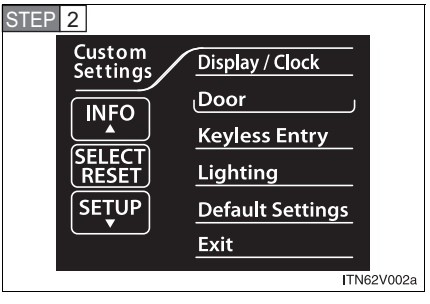


Select the setting you wish to change by pressing the “INFO” or “SETUP” button, then press the “SELECT RESET” button to select.

If you select “Exit” and press the “SELECT RESET” button, the display will return to the previous screen.

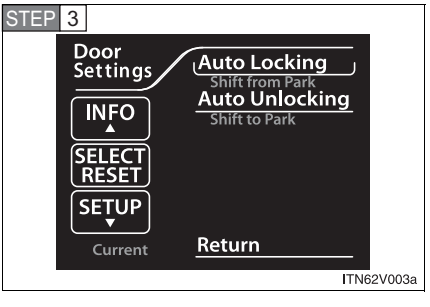


Select the setting you wish to change by pressing the “INFO” or “SETUP” button, and press the “SELECT RESET” button.

The illustration assumes that “Door” was chosen in STEP 2.

The current setting is indicated by yellow text.

If you select “Return” and press the “SELECT RESET” button, the display will return to the “Custom Settings” screen.

STEP 4

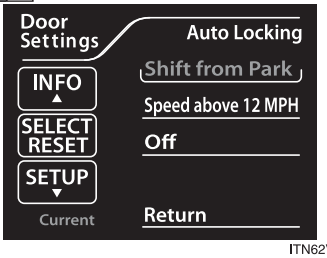


ITN62V004a

Choose a desired setting by pressing the “INFO” or “SETUP” button, then press the “SELECT RESET” button to select.

If any settings are changed, the display will revert to the previous screen.

The illustration assumes that “Auto Locking” was chosen in STEP 3.

The current setting is indicated by yellow text.

If you select “Return” and press the “SELECT RESET” button, the display will revert to the previous screen.

## ■ Restoring default settings

STEP 1

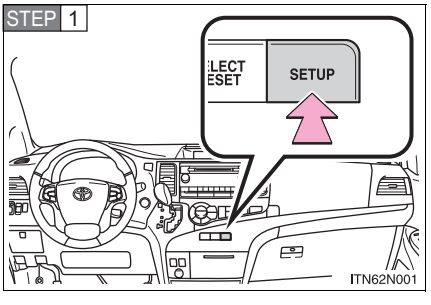


ITN62N001

Press the “SETUP” button while the vehicle is stopped.

The “Custom Settings” screen is displayed on the multi-information display.

If left idle for approximately 20 seconds, the display will revert to the previous screen.

STEP 2

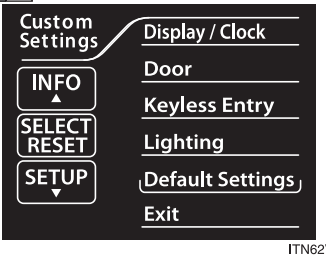


ITN62V005a

Select “Default Settings” by pressing the “INFO” or “SETUP” button, and press the “SELECT RESET” button.

If you select “Exit” and press the “SELECT RESET” button, the display will revert to the previous screen.

STEP 3

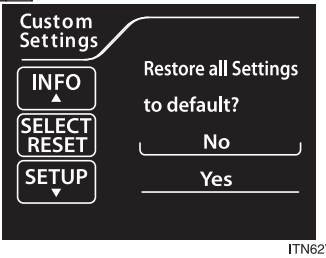


ITN62V006a

Select “Yes” by pressing the “INFO” or “SETUP” button, and press the “SELECT RESET” button.

“Default Settings Restored” is displayed, and the default settings are restored.

If you select “No” and press the “SELECT RESET” button, the display will revert to the “Custom Settings” screen without restoring the default settings.

---

■ **If the vehicle is moved while settings are being changed on the multi-information display**

→P. 248

# Items to initialize

**The following items must be initialized for normal system operation after such cases as the battery being reconnected, or maintenance being performed on the vehicle.**

| Item | When to initialize | Reference |
|---|---|---|
| Power sliding door (if equipped) | After reconnecting or changing the battery | P. 65 |
| Power back door (if equipped) | After reconnecting or changing the battery | P. 77 |
| Engine oil maintenance data (U.S.A. only) | After changing engine oil | P. 614 |
| Tire pressure warning system | When changing the tire size | P. 626 |

# For owners

# 7

Reporting safety defects for U.S. owners ..... 770
Seat belt instructions for Canadian owners (in French) ..... 771

# Reporting safety defects for U.S. owners

If you believe that your vehicle has a defect which could cause a crash or could cause injury or death, you should immediately inform the National Highway Traffic Safety Administration (NHTSA) in addition to notifying Toyota Motor Sales, U.S.A., Inc. (Toll-free: 1-800-331-4331).

If NHTSA receives similar complaints, it may open an investigation, and if it finds that a safety defect exists in a group of vehicles, it may order a recall and remedy campaign. However, NHTSA cannot become involved in individual problems between you, your dealer, or Toyota Motor Sales, U.S.A., Inc.

To contact NHTSA, you may call the Vehicle Safety Hotline toll-free at 1-888-327-4236 (TTY: 1-800-424-9153); go to *http://www.safercar.gov* ; or write to: Administrator, NHTSA, 1200 New Jersey Ave, S.E., Washington, DC 20590. You can also obtain other information about motor vehicle safety from *http://www.safercar.gov*.

**The following is a French explanation of seat belt instructions extracted from the seat belt section in this manual.**

See the seat belt section for more detailed seat belt instructions in English.

## Utilisation correcte des ceintures de sécurité

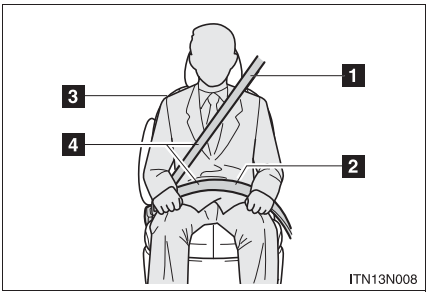


1. Déroulez la sangle diagonale de telle sorte qu'elle passe bien sur l'épaule, sans pour autant être en contact avec votre cou ou glisser de votre épaule.
2. Placez la sangle abdominale le plus bas possible sur les hanches.
3. Réglez la position du dossier de siège. Asseyez-vous le dos le plus droit possible et calez-vous bien dans le siège.
4. Ne vrillez pas la ceinture de sécurité.

ATTENTION

**Lorsque vous utilisez la ceinture de sécurité centrale de la troisième rangée de sièges**

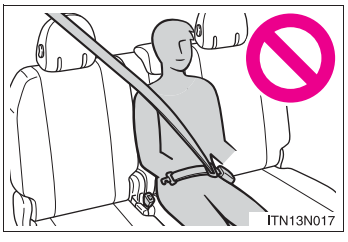


N’utilisez pas la ceinture de sécurité centrale de la troisième rangée de sièges si l’une des boucles est retirée. Fixer une seule boucle pourrait occasionner des blessures graves, voire mortelles, en cas de freinage brusque ou de collision.

## Entretien et soin

### Ceintures de sécurité

Nettoyez avec un chiffon ou une éponge humectée d'eau savonneuse tiède. Profitez de l'occasion pour vérifier régulièrement que les ceintures ne sont pas effilochées, entaillées, ou ne paraissent pas exagérément usées.

ATTENTION

**Détérioration et usure des ceintures de sécurité**

Inspectez les ceintures de sécurité périodiquement. Contrôlez qu'elles ne sont pas entaillées, effilochées, et que leurs ancrages ne sont pas desserrés. N'utilisez pas une ceinture de sécurité défectueuse avant qu'elle ne soit remplacée. Une ceinture de sécurité défectueuse n'apporte aucune garantie de protection de l'occupant en cas d'accident.

# Index

**Abbreviation/Acronym list..... 774**

**Alphabetical index..... 776**

**What to do if..... 787**

For details of equipment related to the navigation system and touch screen, such as the audio systems, refer to the “NAVIGATION SYSTEM OWNER’S MANUAL”.
For details about AUTO ACCESS SEAT, refer to the “AUTO ACCESS SEAT OWNER’S MANUAL”.

# Abbreviation/Acronym list

| ABBREVIATIONS | MEANING |
|---|---|
| 2WD | 2 Wheel Drive |
| A/C | Air Conditioning |
| ABS | Anti-lock Brake System |
| ACC | Accessory |
| AI-SHIFT | Artificial Intelligence Shift control |
| ALR | Automatic Locking Retractor |
| AVG | Average |
| AWD | All Wheel Drive |
| CRS | Child Restraint System |
| ECO | Economy/Ecology |
| ECU | Electronic Control Unit |
| EDR | Event Data Recorder |
| ELR | Emergency Locking Retractor |
| EPS | Electronic Power Steering |
| E/M | English/U.S. customary system/Metric |
| GAWR | Gross Axle Weight Rating |
| GCWR | Gross Combination Weight Rating |
| GVWR | Gross Vehicle Weight Rating |
| I/M | Emission inspection and maintenance |
| LATCH | Lower Anchors and Tethers for Children |
| LED | Light Emitting Diode |
| MAX | Maximum |
| MIN | Minimum |
| MMT | Methylcyclopentadienyl Manganese Tricarbonyl |
| M + S | Mud and Snow |
| MTBE | Methyl Tertiary Butyl Ether |

| ABBREVIATIONS | MEANING |
|---|---|
| OBD | On Board Diagnostics |
| PCS | Pre-Collision System |
| RFT | Run-Flat Tire |
| SRS | Supplemental Restraint System |
| TIN | Tire Identification Number |
| TPMS | Tire Pressure Warning System |
| TRAC | Traction Control |
| VAR | Variation |
| VDIM | Vehicle Dynamics Integrated Management |
| VIN | Vehicle Identification Number |
| VSC | Vehicle Stability Control |

# Alphabetical index


**A**

**A/C.....344, 352, 362, 365**
**ABS .....299**
**Active head restraint .....92**
**Active Torque Control 4WD system .....300**
**Air conditioning filter.....642**
**Air conditioning system**
- Air conditioning filter.....642
- Front automatic air conditioning system .....352
- Front manual air conditioning system .....344
- Rear automatic air conditioning system .....365
- Rear manual air conditioning system .....362

**Airbags**
- Airbag operating conditions.....162
- Airbag precautions for your child .....166
- Airbag warning light.....682
- Curtain shield airbag operating conditions.....162
- Curtain shield airbag precautions .....166
- Front passenger occupant classification system.....172
- General airbag precautions .....166
- Locations of airbags.....159
- Modification and disposal of airbags.....171
- Proper driving posture.....157, 166
- Side and curtain shield airbags operating conditions.....162
- Side and curtain shield airbags precautions .....166
- SRS airbags.....159

**Alarm.....154**
**Antenna .....382**
**Anti-lock brake system .....299**
**Armrest.....558**
**Audio input.....425**
**Audio system**
- A/V input adapter .....475
- Antenna.....382
- Audio input.....425
- Audio visual input.....475
- AUX adapter .....425
- CD player/changer.....386
- DVD player....459, 468, 472, 473
- iPod®.....405
- MP3/WMA disc .....396
- Optimal use.....420
- Portable music player .....425
- Radio.....376
- Rear seat entertainment system .....447
- Steering wheel audio switch.....433
- Type.....371
- USB memory.....412

**Audio visual input.....425**
**Automatic light control system.....251**
**Automatic transaxle**
- Automatic transaxle .....221
- If the shift lever cannot be shifted from “P”.....714
- S mode.....223

**AUX adapter .....425**
**Auxiliary box ..... 543**
**A/V input adapter.....425**

B

**Back-up lights**
Replacing light bulbs ..... 660
Wattage ..... 745
**Back door**
Back door ..... 77
Wireless remote control..... 52
**Battery**
Checking ..... 621
If the vehicle has discharged battery ..... 720
Preparing and checking before winter ..... 324
**Bluetooth® audio ..... 430**
**Bluetooth® phone ..... 488**
**Bottle holder ..... 541**
**Brake**
Fluid..... 619
Parking brake ..... 227
**Brake assist ..... 299**
**Break-in tips ..... 202**
**Brightness control**
Instrument light control..... 230

C

**Care**
Exterior ..... 586
Interior ..... 590
Seat belts ..... 591
**Cargo capacity ..... 314**
**Cargo hooks ..... 565**
**CD changer ..... 386**
**CD player ..... 386**
**Chains ..... 324**
**Child restraint system**
Booster seats, definition.....178
Booster seats, installation .....182
Convertible seats, definition .....178
Convertible seats, installation.....182
Front passenger occupant classification system .....172
Infant seats, definition .....178
Infant seats, installation.....182
Installing CRS with LATCH anchors .....185, 187
Installing CRS with seat belts .....189
Installing CRS with top tether strap.....193, 194
**Child safety**
Airbag precautions .....166
Back door precautions .....77
Battery precautions .....623, 724
Child restraint system.....178
Child-protectors.....68
How your child should wear the seat belt .....127
Installing child restraints.....182
Moon roof precautions .....146
Power window lock switch.....138
Power window precautions ...140
Removed key battery precautions .....647
Seat belt extender precautions .....130
Seat belt precautions .....128
Seat heater precautions.....556
**Child-protectors .....68**

**Cleaning**
Exterior.....586
Interior.....590
Seat belts.....591
**Clock.....237, 550**
**Compass.....573**
**Condenser.....618**
**Console box.....534**
**Conversation mirror.....551**
**Cooling system**
Engine overheating.....725
**Cruise control**
Cruise control.....271
Dynamic radar cruise control.....275
**Cup holders.....538**
**Curtain shield airbags.....159**
**Customizable features.....761**

D

**Daytime running light system.....254**
**Defogger**
Rear window.....369
Side mirrors.....369
**Dimension.....734**
**Dinghy towing.....341**
**Display**
Dynamic radar cruise control.....275
Multi-information display.....237
Trip information.....237
Warning messages.....694
**Do-it-yourself maintenance....600**
**Door courtesy lights**
Door courtesy lights.....524
Wattage.....745
**Door lock**
Back door.....77
Front door.....59
Sliding door.....65
Wireless remote control key.....52
**Doors**
Back door.....77
Door lock.....52, 59, 66
Front doors.....59
Side mirrors.....134
Sliding doors.....65
**Driver's seat belt reminder light.....684**
**Driving**
Break-in tips.....202
Correct posture.....157
Procedures.....200
Winter driving tips.....324
**Driving position memory.....114**
**DVD player.....459, 468, 472, 473**

E

**Electric power steering..... 299**
**Electronic key**
If your electronic key does not operate properly ..... 717
**Emergency, in case of**
If the back door opener is inoperative ..... 80
If the electronic key does not operate properly ..... 717
If the engine will not start..... 712
If the shift lever cannot be shifted ..... 714
If the vehicle has discharged battery ..... 720
If the warning buzzer sounds... ..... 681
If the warning light turns on ..... 681
If the warning message is displayed ..... 694
If you have a flat tire .... 695, 697
If you lose your keys..... 716
If you think something is wrong ..... 677
If your vehicle becomes stuck..... 728
If your vehicle has to be stopped in an emergency ..... 730
If your vehicle needs to be towed ..... 673
If your vehicle overheats ..... 725
**Emergency flashers ..... 672**
**Engine**
Accessory mode.....216
Compartment .....608
Engine switch .....212, 215
Hood.....604
How to start the engine .....212, 215
Identification number.....735
If the engine will not start .....712
Ignition switch.....212, 215
Overheating.....725
**Engine coolant**
Capacity .....739
Checking .....616
Preparing and checking before winter .....324
**Engine coolant temperature gauge .....229**
**Engine immobilizer system.....151**
**Engine oil**
Capacity .....737
Checking .....610
Preparing and checking before winter .....324
**Engine oil maintenance data .....613**
**Engine switch.....212, 215**
**EPS.....299**
**Event data recorder .....679**

F

**Floor mat.....563**
**Fluid**
Brake.....619
Washer.....625
**Fog lights**
Replacing light bulbs.....660
Switch.....264
Wattage.....745
**Front fog lights**
Replacing light bulbs.....660
Switch.....264
Wattage.....745
**Front passenger occupant classification system .....172**
**Front passenger's seat belt reminder light.....684**
**Front seats**
Adjustment .....89
Driver's seat position memory.....114
**Front side marker lights**
Replacing light bulbs.....660
Switch.....251
Wattage.....745
**Front turn signal lights**
Replacing light bulbs.....660
Wattage.....745
**Fuel**
Capacity .....737
Fuel gauge .....229
Fuel pump shut off system....678
Gas station information .....792
Information .....746
Refueling.....147
Type .....737
**Fuel door.....147**
**Fuel filler door .....147**
**Fuel pump shut off system .....678**
**Fuses.....648**

G

**Garage door opener .....567**
**Gauges.....229**
**Glove box .....532**
**Grocery bag hooks.....561**

H

**Hands-free system (for cellular phone).....488**
**Head restraints**
Adjusting .....119
**Headlights**
Manual headlight leveling dial.....253
Replacing light bulbs.....660
Switch .....251
Wattage.....745
**Heaters**
Seat heaters.....556
Side mirror .....369
**Hill-start assist control.....305**
**Hood.....604**
**Hooks**
Cargo .....565
Grocery bag .....561
**Horn .....228**

**I**

**I/M test..... 599**
**Identification**
Engine ..... 735
Vehicle..... 735
**Ignition switch..... 212, 215**
**Illuminated entry system..... 524**
**Indicator lights ..... 232**
**Initialization**
Items to initialize..... 768
**Inside rear view mirror..... 132**
**Interior lights**
Interior lights..... 524
Switch..... 525
Wattage..... 745
**Intuitive parking assist ..... 288**

**J**

**Jack**
Positioning a floor jack ..... 606
Vehicle-equipped jack ..... 697
**Jack handle..... 697**

**K**

**Keyless entry..... 52**
**Keys**
Electronic key..... 30
Engine switch ..... 212, 215
If you lose your keys..... 716
If the electronic key does not operate properly..... 717
Ignition switch..... 212, 215
Keyless entry..... 52
Key number..... 30
Keys ..... 30
Mechanical key..... 30
Wireless remote control..... 52

**L**

**License plate lights**
Replacing light bulbs.....660
Wattage.....745
**Light bulbs**
Replacing .....660
Wattage.....745
**Lights**
Door courtesy lights .....524
Engine switch light .....524
Fog light switch .....264
Headlight switch.....251
Interior light switch .....525
Luggage compartment light .....79
Outer foot lights.....524
Personal light switch .....525
Rear ceiling light.....527
Replacing light bulbs.....660
Turn signal lever.....226
Vanity lights.....549
Wattage.....745
**Load capacity.....322**
**Lock steering column.....212, 215**
**Luggage compartment light**
Switch.....79
Wattage.....745

**M**

**Maintenance**
- Do-it-yourself maintenance ..... 600
- General maintenance ..... 595
- Maintenance data ..... 734
- Maintenance requirements .... 593

**Meter**
- Instrument panel light control ..... 230
- Meters ..... 229

**Mirrors**
- Conversation mirror ..... 551
- Inside rear view mirror ..... 132
- Side mirror heaters ..... 369
- Side mirrors ..... 134
- Vanity mirrors ..... 549

**Moon roof ..... 143**
**MP3 disc ..... 396**
**Multi-information display ..... 237**

**N**

**Noise from under vehicle ..... 24**

**O**

**Odometer ..... 229**

**Oil**
- Engine oil ..... 610

**Opener**
- Back door ..... 77
- Fuel filler door ..... 147
- Hood ..... 604

**Outer foot lights**
- Outer foot lights ..... 524
- Replacing light bulbs ..... 660
- Wattage ..... 745

**Outside rear view mirrors**
- Adjusting and folding ..... 134
- Driving position memory ..... 114

**Overhead console ..... 537**
**Overheating, Engine ..... 725**

**P**

**Parking assist sensors ..... 288**
**Parking brake ..... 227**

**Parking lights**
- Replacing light bulbs ..... 660
- Switch ..... 251
- Wattage ..... 745

**PCS ..... 307**

**Personal lights**
- Switch ..... 525
- Wattage ..... 745

**Power back door ..... 77**
**Power outlets ..... 552**
**Power windows ..... 138, 141**
**Pre-collision system ..... 307**

**Q**

**Quarter windows ..... 141**

**R**

**Radar cruise control ..... 275**
**Radiator ..... 618**
**Radio ..... 376**
**Rear automatic air conditioning system ..... 365**

**Rear ceiling light**
- Switch ..... 527
- Wattage ..... 745

**Rear manual air conditioning system ..... 362**

**Rear seat**
- Adjustment ..... 94
- Folding third seats ..... 103, 104
- Installing second seats ..... 101
- Removing second seats ..... 98
- Stowing third seats ..... 105, 107

**Rear seat entertainment system ..... 447**

**Rear turn signal lights**
Replacing light bulbs ..... 660
Wattage ..... 745
**Rear view mirror**
Compass ..... 573
**Rear window defogger..... 369**
**Rear window wiper..... 270**
**Replacing**
Electronic key battery ..... 645
Fuses..... 648
Light bulbs ..... 660
Rear seat entertainment system control battery..... 456
Tires ..... 697
Wireless remote control battery ..... 645
**Reporting safety defects for U.S. owners ..... 770**
**Roof luggage carrier ..... 314**

S

**Safety connect..... 578**
**Seat belts**
Adjusting the seat belt..... 123
Automatic Locking Retractor ..... 126
Child restraint system installation ..... 182
Cleaning and maintaining the seat belts..... 591
Emergency Locking Retractor ..... 126
How to wear your seat belt ..... 122
How your child should wear the seat belt ..... 127
Pre-collision seat belt ..... 125
Pregnant women, proper seat belt use ..... 126
Reminder light ..... 684
Seat belt extenders ..... 127
Seat belt pretensioners ..... 125
**Seat heaters.....556**
**Seating capacity.....322**
**Seats**
Adjustment .....89, 94
Adjustment precaution .....93, 110
Child seats/child restraint system installation .....182
Cleaning .....590
Driver's seat position memory.....114
Head restraint.....119
Properly sitting in the seat.....157
Seat heaters.....556
**Service reminder indicators .....232**
**Shift lever**
Automatic transaxle.....221
If the shift lever cannot be shifted from P.....714
**Shift lock system .....714**
**Side airbags.....159**
**Side marker lights**
Replacing .....660
Switch.....251
Wattage.....745
**Side mirrors**
Adjusting and folding.....134
Mirror position memory .....114
**Sliding doors**
Sliding doors .....65
Wireless remote control .....52
**Smart key system**
Entry function .....34
Starting the engine .....215

**Spare tire**
Inflation pressure.....743
Storage location .....697
**Spark plug .....739**
**Specifications.....734**
**Speech command switch.....494**
**Speedometer .....229**
**Steering wheel**
Adjustment .....131
Audio switches .....426
Column lock release.....213, 218
**Stop lights**
Replacing light bulbs.....660
Wattage.....745
**Storage feature.....530**
**Storage precautions .....319**
**Stuck**
If your vehicle becomes stuck .....728
**Sunshades**
Rear door .....560
Roof.....143
**Sun visors.....548**
**Switch**
Engine switch.....212, 215
Fog light switch .....264
Ignition switch.....212, 215
Light switches.....251
Power back door .....77
Power door lock switch .....60
Power window switch....138, 141
Window lock switch.....138
Wiper and washer switch.....265, 270

T

**Tachometer .....229**
**Tail lights**
Replacing light bulbs.....660
Switch .....251
Wattage.....745
**Talk switch .....494**
**Telephone switch.....494**
**Theft deterrent system**
Alarm.....154
Engine immobilizer system .....151
**Theft prevention labels .....156**
**Tire inflation pressure .....636**
**Tire information**
Glossary.....755
Size .....743
Tire identification number.....751
Uniform tire quality grading.....753
**Tires**
Chains.....324
Checking .....626
If you have a flat tire.....695, 697
Inflation pressure .....636
Information .....749
Replacing .....627
Rotating tires.....627
Size .....743
Snow tires .....324
Tire pressure warning system .....626, 684
**Tools .....697**
**Total load capacity .....322**

**Towing**
Dinghy towing ..... 341
Trailer towing ..... 328
**Traction control ..... 299**
**TRAC ..... 299**
**Trailer towing ..... 328**
**Trip information display ..... 237**
**Trip meter ..... 229**
**Turn signal lights**
Replacing light bulbs ..... 660
Switch ..... 226
Wattage ..... 745

V

**Valet key ..... 30**
**Vanity lights**
Vanity lights ..... 549
Wattage ..... 745
**Vanity mirrors ..... 549**
**VDIM ..... 300**
**Vehicle identification number ..... 735**
**Vehicle stability control ..... 299**
**VSC ..... 299**

W

**Warning buzzers**
Brake system .....681
Open door .....684
Seat belt reminder.....684
**Warning lights**
Anti-lock brake system .....682
Brake assist system .....682
Brake system .....681
Charging system .....682
Engine oil pressure .....682
Low fuel level .....684
Low washer fluid .....684
Malfunction indicator lamp ....682
Master warning light .....684
Open door .....684
Pre-collision system .....682
Pretensioners .....682
Seat belt reminder light .....684
SRS airbags .....682
Third seat warning light .....684
Tire pressure warning light....684
**Warning messages .....694**
**Washer**
Checking .....625
Preparing and checking before winter .....324
Switch.....265, 270
**Washing and waxing .....586**

**Weight**
Cargo capacity .....314
Load limits .....322
Weight .....734
**Wheels .....640**
**Window glasses .....138, 141**
**Window lock switch.....138**
**Windows**
Power windows .....138, 141
Rear window defogger .....369
Washer.....265, 270
**Windshield wiper de-icer.....369**
**Windshield wipers .....265**
**Wireless remote control key**
Replacing the battery .....645
Wireless remote control .....52
**WMA disc.....396**

# What to do if...

| | | |
|---|---|---|
| A tire punctures | P. 695/ P. 697 | If you have a flat tire |
| The engine does not start | P. 712 | If the engine will not start |
| | P. 151 | Engine immobilizer system |
| | P. 720 | If the battery is discharged |
| The shift lever cannot be moved out | P. 714 | If the shift lever cannot be shifted from P |
| The engine coolant temperature gauge enters the red zone | P. 725 | If your vehicle overheats |
| Steam can be seen coming from under the hood | | |
| The key is lost | P. 716 | If you lose your keys/wireless remote control transmitter |
| The battery runs out | P. 720 | If the battery is discharged |
| The doors cannot be locked | P. 59 | Front doors |
| | P. 65 | Siding doors |
| | P. 77 | Back door |
| The horn begins to sound | P. 154 | Alarm |
| The vehicle is stuck in mud or sand | P. 728 | If the vehicle becomes stuck |

A warning light or indicator light comes on P. 681 If a warning light turns on or a warning buzzer sounds...

## Instrument cluster

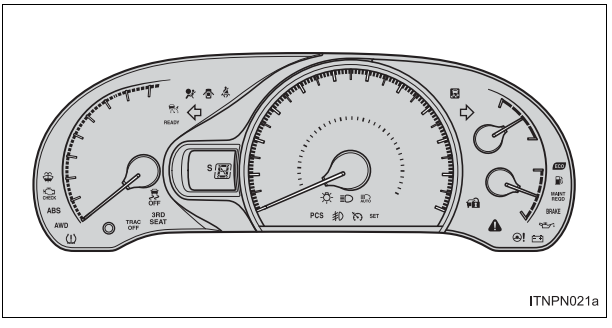


## Center display

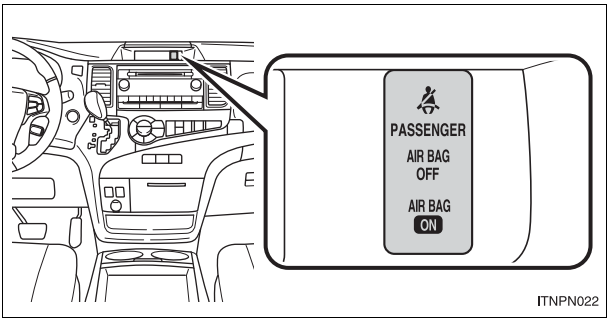

## ■Warning lights

| | | |
|---|---|---|
| BRAKE or | Brake system warning light | P. 681 |
| | Charging system warning light | P. 682 |
| | Low engine oil pressure warning light | P. 682 |
| CHECK or | Malfunction indicator lamp | P. 682 |
| | SRS warning light | P. 682 |
| ABS or | “ABS” warning light | P. 682 |
| | Slip indicator light | P. 683 |
| MAINT REQD | Engine oil replacement reminder light | P. 684 |
| | Tire pressure warning light | P. 684 |
| | Low washer fluid warning light | P. 684 |
| | Open door warning light | P. 684 |
| | Driver’s seat belt reminder light | P. 684 |
| PASSENGER | Front passenger’s seat belt reminder light | P. 684 |
| 3RD SEAT | Third seat warning light | P. 684 |
| | Electric power steering system warning light | P. 682 |
| | Master warning light | P. 684 |
| | Low fuel level warning light | P. 684 |
| AWD | Active torque control 4WD system warning light | P. 684 |
| PCS | Pre-collision system warning light* | P. 682 |
| | Cruise control indicator light* | P. 683 |
| | Radar cruise control indicator light* | P. 683 |
| AUTO | Automatic High Beam indicator light* | P. 683 |

*: The light flashes to indicate a malfunction.

# GAS STATION INFORMATION

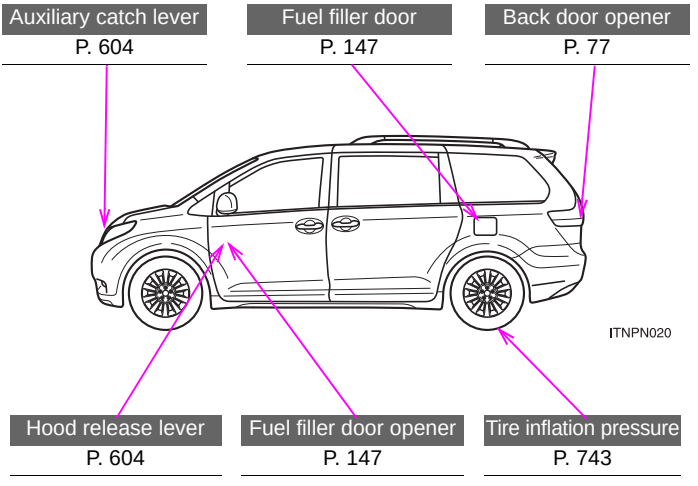


| | |
|---|---|
| Fuel tank capacity (Reference) | 20.9 gal. (79 L, 17.4 Imp.gal.) |
| Fuel type | Unleaded gasoline with an Octane Rating of 87 (Research Octane Number 91) |
| Cold tire inflation pressure | P. 743 |
| Engine oil capacity Drain and refill (Reference) | qt. (L, Imp.qt.)<br>1AR-FE engine / 2GR-FE engine<br>Without filter: 4.2 (4.0, 3.5) / 6.0 (5.7, 5.0)<br>With filter: 4.7 (4.4, 3.9) / 6.4 (6.1, 5.4) |
| Engine oil type | Toyota Genuine Motor Oil or equivalent<br>Oil grade: P. 737<br>ILSAC multigrade engine oil<br>Recommended oil viscosity: 0W-20 |