OWNER'S MANUAL

MINI COOPER
MINI COOPER S

Contents
A-Z

Online Edition for Part-No. 01 41 0 156 890 - © 09/02 BMW AG

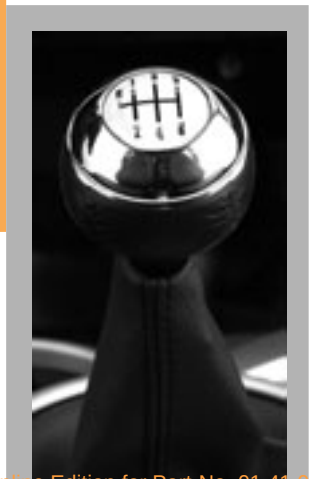

Online Edition for Part-No. 01 41 0 156 890 - © 09/02 BMW AG

CONGRATULATIONS ON YOUR NEW MINI

This Owner's Manual should be considered a permanent part of this vehicle. It should stay with the vehicle when sold to provide the next owner with important operating, safety and maintenance information.

We wish you an enjoyable driving experience.

Online Edition for Part-No. 01 41 0 156 890 - © 09/02 BMW AG

CONTENTS

Notes

About this Owner's Manual 6
Symbols used 6
Your individual vehicle 6
Editorial notice 7
For your own safety 7
Symbol on vehicle parts 8
Service and warranty 8
Reporting safety defects 8

© 2002 Bayerische Motoren Werke
Aktiengesellschaft
Munich, Germany
Reprinting, including excerpts, only with the
written consent of BMW AG, Munich.
Order No. 01 41 0 156 890
US English VIII/02
Printed in Germany
Printed on environmentally friendly paper –
bleached without chlorine, suitable for recycling.

At a glance

Cockpit 12
Display elements 13
Display elements with navigation system 14
Indicator and warning lamps 15
Multifunction steering wheel 19

Controls and features

Opening and closing:
Keys 22
Central locking system 23
Opening and closing – from outside 23
Opening and closing – from inside 26
Tailgate 27
Electric power windows 28
Sliding/tilt sunroof 29
Roller sun blind 30
Alarm system 31

Adjustments:
Safe seating position 33
Seat adjustment 34
Entry to the rear 35
Heated seats 36
Head restraints 37
Safety belts 38
Steering wheel 38
Mirrors 39
Airbags 40
Transporting children safely 41
Vehicle Memory 44

Online Edition for Part-No. 01 41 0 156 890 - © 09/02 BMW AG

Driving:
Ignition lock 45
Starting the engine 46
Switching off the engine 47
Parking brake 47
Manual transmission 48
Continuously Variable automatic Transmission (CVT) 49
Parking lamps/Low beams 52
Turn signal indicator/Headlamp flasher 52
Instrument lighting 53
Fog lamps 53
Interior lamps 53
Light-emitting diodes 54
Washer/wiper system 54
Cruise control 56

Everything under control:
Odometer 58
Tachometer 58
Fuel gauge 58
Coolant temperature gauge 59
Service interval display 60
Clock 60
Computer 60

Technology for safety and driving convenience:
Automatic Stability Control plus Traction (ASC+T) 62
Dynamic Stability Control (DSC) 63
Flat Tire Monitor 64
Park Distance Control (PDC) 66

Controlling the climate for pleasant driving:
Air conditioning system 67
Automatic climate control 70

Interior conveniences:
Glove compartment 73
Ashtray/Beverage holder 73
Cigarette lighter/12 V power supply 73

Loading and transporting cargo:
Cargo area cover 74
Foldable rear backrest 74
Loading cargo 75
Roof-mounted luggage rack 76

Operation, care, maintenance

Special operating instructions:
Break-in procedures 80
General driving notes 81
Refueling 82
Fuel specifications 83
Antilock Brake System (ABS) 83
Brake system 84

Wheels and tires:
Tire inflation pressure 85
Tire condition 87
Tire replacement 87
Wheel and tire combinations 89
Winter tires 89
Snow chains 90

Online Edition for Part-No. 01 41 0 156 890 - © 09/02 BMW AG

CONTENTS

In the engine compartment:
Bonnet 91
Engine compartment – MINI COOPER 92
Engine compartment – MINI COOPER S 93
Washer fluid 94
Engine oil 94
Coolant 96
Brake fluid 97

Maintenance and care:
MINI Maintenance System 98
Caring for your vehicle 99
Vehicle immobilization 101

Laws and regulations:
OBD socket 102
Technical modifications 103
California Proposition 65 warning 103

Owner service procedures

Replacement procedures:
On-board tool kit 106
Windshield wiper blades 106
Lamps and bulbs 107
Repairing a flat tire 112
Changing tires –
MINI with space-saver spare tire 112
Flat tire –
Run Flat tires 116
MINI Mobility System 118
Battery 122
Fuses 123

Giving and receiving assistance:
Warning triangle 124
First-aid kit 124
Jump-starting 124
Towing 126

Technical data

Engine data 130
Dimensions 131
Weights 132
Capacities 133

Online Edition for Part-No. 01 41 0 156 890 - © 09/02 BMW AG

Index

Everything from A to Z 136

Online Edition for Part-No. 01 41 0 156 890 - © 09/02 BMW AG

NOTES

About this Owner's Manual

In compiling this Owner's Manual we have made every effort to furnish you with a convenient reference source affording quick access to all the essentials. The fastest way to find detailed information on any specific subject is to turn to the comprehensive index at the back of the manual. If you wish to gain an initial overview of your vehicle, you will find this in the first chapter.

Should you wish to sell your MINI at some time in the future, please remember to hand over this Owner's Manual to the new owner; it is an important part of the vehicle.

If you have any additional questions, your MINI Dealer will be glad to advise you.

Symbols used

Indicates precautions that must be followed precisely in order to avoid the possibility of personal injury and serious damage to the vehicle.

Contains information that will assist you in gaining the optimum benefit from your vehicle and enable you to care more effectively for your vehicle.

Refers to measures that can be taken to help protect the environment.

◀ Marks the end of a specific item of information.

* Indicates special equipment, country-specific equipment and optional extras.

Identifies systems or components which you can have activated or adjusted by your MINI Dealer to suit your individual requirements –
Vehicle Memory, see page 44.

Your individual vehicle

The manufacturer of your MINI is the Bayerische Motoren Werke Aktiengesellschaft – BMW AG.

On purchasing your MINI, you have decided in favor of a model with individualized equipment and features. This Owner's Manual describes the entire array of options and equipment that the manufacturer of your MINI makes available with a specific model range.

We hope you will understand that equipment and features are included that you might not have chosen for your vehicle. To assist you in identifying possible variations between your own vehicle and the manual's contents, the passages describing optional accessories and special equipment are marked with an asterisk *.

If your MINI features equipment that is not described in this Owner's Manual – a car radio, for instance – we have enclosed additional operating instructions. We ask you to read these manuals as well.

Online Edition for Part-No. 01 41 0 156 890 - © 09/02 BMW AG

NOTES

Editorial notice

The manufacturer pursues a policy of continuous, ongoing development that is conceived to ensure that the MINI continues to embody the highest quality and safety standards combined with advanced, state-of-the-art technology. For this reason, the features described in this Owner's Manual could differ from those on your vehicle. Nor can errors and omissions be entirely ruled out.

You are therefore asked to appreciate that no claims can be entertained on the basis of the data, illustrations or descriptions in this Owner's Manual.

For your own safety

Use unleaded gasoline only. Fuels containing up to and including 10% Ethanol or other oxygenates with up to 2.8% oxygen by weight – i.e. 15% MTBE or 3% methanol plus an equivalent amount of co-solvent – will not void the applicable warranties with respect to defects in materials or workmanship. Field experience has indicated significant differences in fuel quality – i.e. volatility, composition, additives, etc. – among gasolines offered for sale in the United States and Canada. The use of poor-quality fuels may result in driveability, starting and stalling problems, especially under certain environmental conditions such as high ambient temperature and high altitude.
Should you encounter driveability problems which you suspect could be related to the fuel you are using, we recommend that you respond by switching to a recognized high-quality brand.
Failure to comply with these recommendations may result in unscheduled maintenance.
Obey pertinent safety rules when you are handling gasoline.◀

Important safety information.
For your own safety, use genuine parts and accessories approved by the manufacturer of the MINI.
When you purchase accessories tested and approved by the manufacturer of the MINI and Original MINI Parts, you simultaneously acquire the assurance that they have been thoroughly tested by the manufacturer of the MINI to ensure optimum performance when installed on your vehicle.
The manufacturer of the MINI warrants these parts to be free from defects in material and workmanship.
The manufacturer of the MINI will not accept any liability for damages resulting from installation of parts and accessories not approved by the manufacturer of the MINI.
The manufacturer of the MINI cannot test every product from other manufacturers to verify if it can be used on a MINI safely and without risk to either the vehicle, its operation, or its occupants.
Original MINI Parts, MINI Accessories and other products approved by the manufacturer of the MINI, together with professional advice on using these items, are available from all MINI Dealers.

Online Edition for Part-No. 01 41 0 156 890 - © 09/02 BMW AG

Installation and operation of non-MINI approved accessories such as alarms, radios, amplifiers, radar detectors, wheels, suspension components, brake dust shields, telephones – including operation of any portable cellular phone from within the vehicle without using an externally mounted antenna – or transceiver equipment – e.g. CB, walkie-talkie, ham radio or similar – may cause extensive damage to the vehicle, compromise its safety, interfere with the vehicle's electrical system or affect the validity of the MINI Limited Warranty. See your MINI Dealer for additional information.◀

▷ Maintenance, replacement, or repair of the emission control devices and systems may be performed by any automotive repair establishment or individual using any certified automotive part.◀

Symbol on vehicle parts

Indicates that you should consult the relevant section of this Owner's Manual for information on a particular part or assembly.

Service and warranty

This manual is supplemented by a Service and Warranty Information Booklet for US models or a Warranty and Service Guide Booklet for Canadian models.

We recommend that you read this publication thoroughly.

Your MINI is covered by the following warranties:

- ▷ New Vehicle Limited Warranty
- ▷ Rust Perforation Limited Warranty
- ▷ Federal Emissions System Defect Warranty
- ▷ Federal Emissions Performance Warranty
- ▷ California Emission Control System Limited Warranty

Detailed information about these warranties is listed in the Service and Warranty Information Booklet for US models or in the Warranty and Service Guide Booklet for Canadian models.

Reporting safety defects

The following only applies to vehicles owned and operated in the US.

If you believe that your vehicle has a defect which could cause a crash or could cause injury or death, you should immediately inform the National Highway Traffic Safety Administration NHTSA in addition to notifying the MINI Division of BMW of North America, LLC, P.O. Box 1227, Westwood, New Jersey 07675-1227, Telephone toll-free 1-866-275-6464.

If NHTSA receives similar complaints, it may open an investigation, and if it finds that a safety defect exists in a group of vehicles, it may order a recall and remedy campaign. However, NHTSA cannot become involved in individual problems between you, your dealer, or BMW of North America, LLC.

To contact NHTSA, you may either call the Auto Safety Hotline toll-free at 1-800-424-9393 or 366-0123 in Washington, D.C. area, or write to: NHTSA, U.S. Department of Transportation, Washington, D.C. 20590. You can also obtain other information about motor vehicle safety from the Hotline.

Online Edition for Part-No. 01 41 0 156 890 - © 09/02 BMW AG

Online Edition for Part-No. 01 41 0 156 890 - © 09/02 BMW AG

Online Edition for Part-No. 01 41 0 156 890 - © 09/02 BMW AG

OVERVIEW

CONTROLS

OPERATION, CARE, MAINTENANCE

OWNER SERVICE PROCEDURES

TECHNICAL DATA

INDEX

Online Edition for Part-No. 01 41 0 156 890 - © 09/02 BMW AG

COCKPIT

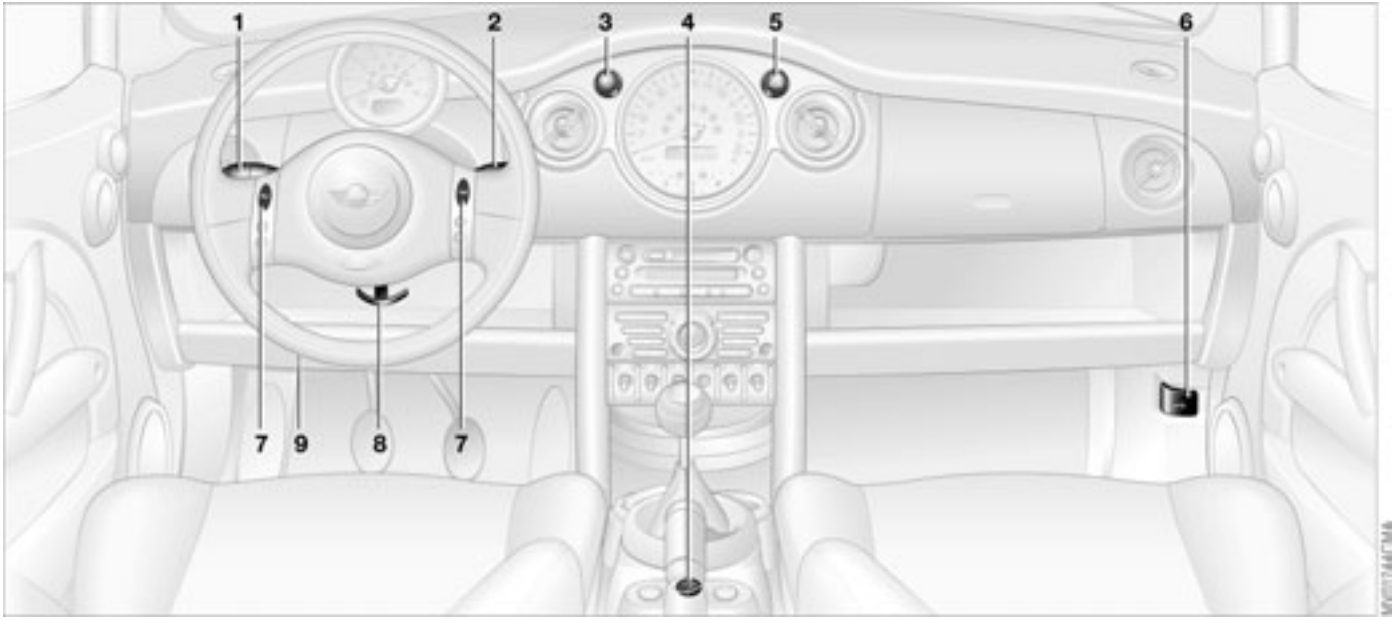

1 ▷ Parking lamps/Low beams 52
▷ Turn signal indicators 52
▷ Standing lamps 52
▷ High beams 52
▷ Headlamp flasher 52
▷ Computer 60

2 Washer/wiper system 54

3 Instrument lighting 53

4 Outside mirror adjustment 39

5 Hazard warning flashers

6 Bonnet release 91

7 Horn 19

8 Adjusting steering wheel 38

9 OBD interface socket 102

Online Edition for Part-No. 01 41 0 156 890 - © 09/02 BMW AG

DISPLAY ELEMENTS

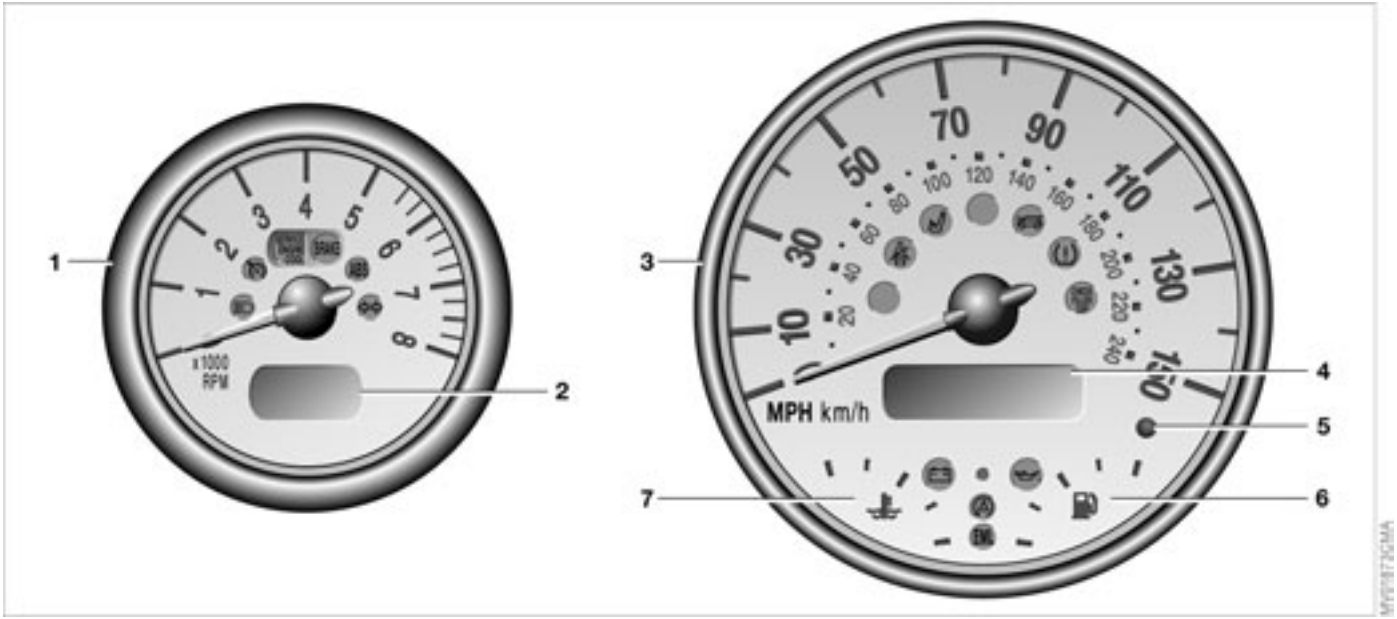

1 Tachometer 58
with indicator and warning lamps, see from page 15

2 Display for the computer, refer to page 60 – if there is no computer, display of the outside temperature

3 Speedometer with indicator and warning lamps, see from page 15

4 Indicator for
- ▷ Odometer 58
- ▷ Trip odometer 58
- ▷ Service interval 60
- ▷ Program display for Continuously Variable automatic Transmission (CVT) 51

5 Trip odometer, reset to zero 58

6 Fuel gauge 58

7 Engine coolant temperature gauge 59

Online Edition for Part-No. 01 41 0 156 890 - © 09/02 BMW AG

DISPLAY ELEMENTS WITH NAVIGATION SYSTEM*

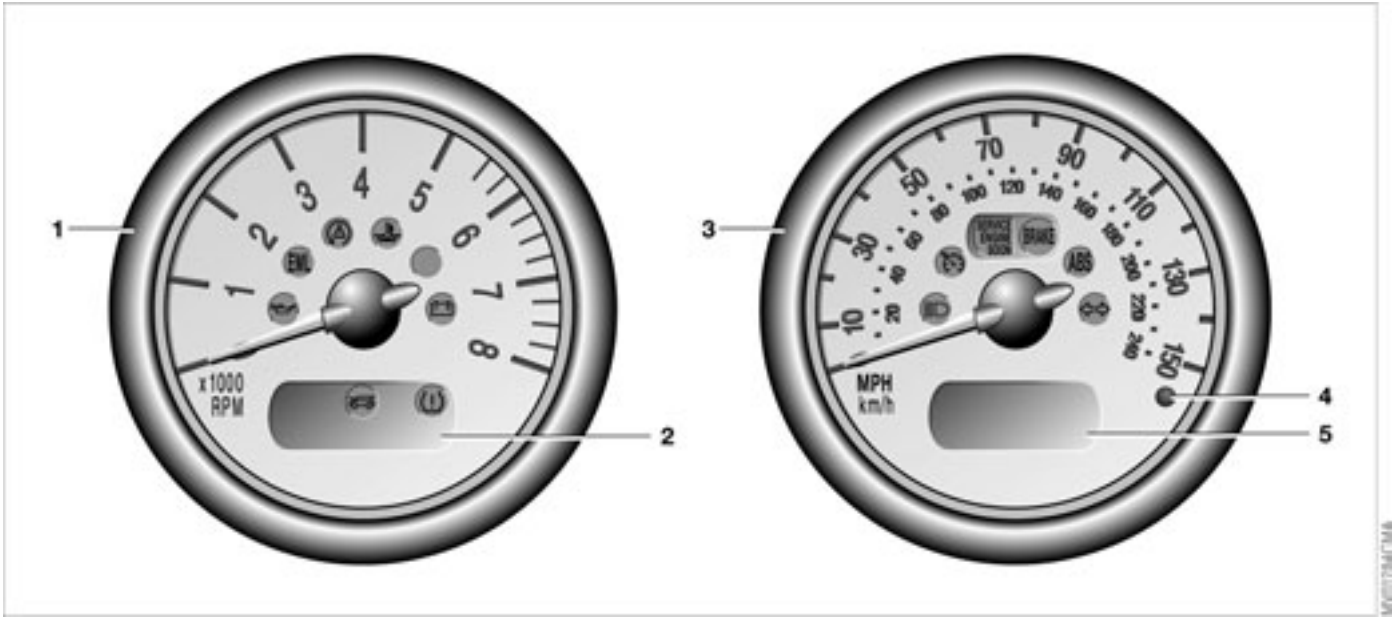

1 Tachometer 58
with indicator and warning lamps, see from page 15

2 Additional indicator and warning lamps, refer to page 16 – Display for computer in navigation system, see separate Owner's Manual

3 Speedometer with indicator and warning lamps, see from page 15

4 Trip odometer, reset to zero 58

5 Indicator for
- ▷ Odometer 58
- ▷ Trip odometer 58
- ▷ Service interval 60
- ▷ Program display for Continuously Variable automatic Transmission (CVT) 51

Online Edition for Part-No. 01 41 0 156 890 - © 09/02 BMW AG

Technology that monitors itself

The system runs a check on the warning and indicator lamps marked by ● each time you switch on the ignition. They each light up once for different periods of time.

If a malfunction should occur in one of these systems, the corresponding lamp does not go out after the engine is started or it lights up while the vehicle is moving. You will see below the correct way to react to this.

Red: stop immediately

Battery charge current ●
The battery is no longer being charged. Indicates a defective alternator drive belt or a problem with the charge circuit. Please contact the nearest MINI Dealer.
If this lamp lights up, the power-assist for steering can be deactivated.

If the drive belt is defective, do not continue driving. The engine could be damaged due to overheating. When the power-assist is deactivated, increased steering effort is required.◀

Engine oil pressure ●
Stop immediately. Switch off engine. Check the engine oil and fill as needed. Please contact the nearest MINI Dealer.

Do not continue driving, otherwise, the engine could be damaged because of inadequate lubrication.◀

Brake warning lamp ●
If the lamp comes on when the parking brake is not engaged:
Check the brake fluid level. Before driving further, be sure to comply with the information on pages 84 and 97.

Brake warning lamp for Canadian models.

With navigation system option:

Coolant temperature warning lamp in the speedometer ●
Lights up while driving:
Engine is too hot. Switch off the engine immediately and allow to cool down, see also page 59.

Online Edition for Part-No. 01 41 0 156 890 - © 09/02 BMW AG

Yellow: stop immediately

Flat Tire Monitor ●
Flashes: tire failure.
Reduce speed immediately and stop the vehicle.

With Run Flat tires:
Carefully reduce the driving speed to below 50 mph / 80 km/h and continue to a safe location.

In both cases, avoid hard brake applications and steering maneuvers. Check the tire inflation pressures.
Conduct in the event of a flat tire, refer to pages 112, 116.

General information on the system, refer to page 64

Red and yellow: continue driving cautiously

Brake warning lamp together with the gold indicator lamp for ABS, EBD and ASC+T/DSC:
The control system ABS, EBD and ASC+T/DSC has failed. Drive cautiously and defensively. Avoid full brake applications. Please have the system checked by your MINI Dealer as soon as possible.
More information on pages 62, 63

Brake warning lamp together with the yellow indicator warning lamps ABS, EBD and ASC+T/DSC for Canadian models.

Red: an important reminder

Brake warning lamp
with parking brake applied.
More information on the parking brake on page 47

Brake warning lamp for Canadian models.

Fasten safety belts ●
Lights up for several seconds or, depending on the version, until after the safety belts are fastened. A signal* also sounds depending on the version.
More information on page 38

Depending on the level of equipment, the indicator lamp is in the vicinity of the navigation system.◀

Airbags ●
Please have the system inspected at your MINI Dealer.
More information on pages 33, 40

Depending on the level of equipment, the indicator lamp is in the vicinity of the navigation system.◀

Bonnet/Tailgate
Lights up when the bonnet and/or tailgate are open.
More information on pages 27, 91

Online Edition for Part-No. 01 41 0 156 890 - © 09/02 BMW AG

Yellow: check as soon as possible

Flat Tire Monitor
Stays lit: the system is defective. Please have the system inspected at your MINI Dealer.
More information on page 64

Antilock Brake System (ABS)
ABS has been deactivated in response to system malfunction. Conventional braking efficiency is available. Please have the system inspected at your MINI Dealer.
More information on pages 83

ABS indicator lamp for Canadian models.

Automatic Stability Control plus Traction (ASC+T)/Dynamic Stability Control (DSC)
Indicator lamp flashes:
System active: drive and braking forces are regulated.
The indicator lamp stays lit: ASC+T/DSC switched off with button or defective. In the event of a defect: please have the system inspected at your MINI Dealer.
More information on pages 62, 63

Service Engine Soon
If the warning lamp comes on either continuously or intermittently, this indicates a malfunction in the emissions-related electronic systems. Although the vehicle remains operational, you should have the systems checked by your MINI Dealer at the earliest possible opportunity.

Service Engine Soon warning lamp for Canadian models.

Engine electronics*
Malfunction in the engine electronics. You can continue to drive with reduced engine output or engine speed. Please have the system inspected at your MINI Dealer.

Check Filler Cap*
This indicator lamp comes on when the fuel filler cap is loose or missing. Close the filler cap tightly:
Refer to page 82

Depending on the level of equipment, the indicator lamp is in the vicinity of the navigation system.◀

Online Edition for Part-No. 01 41 0 156 890 - © 09/02 BMW AG

Green: for your information

Turn signal indicators
Flashes when turn signal indicator is on.
Rapid flashing: the system is defective.
More information on page 52

Cruise control*
Lights up when the cruise control is activated: operation via the multi-function steering wheel.
More information on page 56

Blue: for your information

High beams
Comes on when the high beams are on or the headlamp flasher is actuated. More information on page 52

Online Edition for Part-No. 01 41 0 156 890 - © 09/02 BMW AG

MULTIFUNCTION STEERING WHEEL*

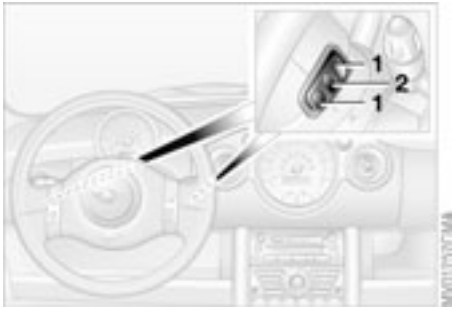

The control buttons integrated within the multifunction steering wheel have been designed to allow you to operate a number of accessories both quickly and safely, without taking your eyes from the road:

▷ Some audio source functions
▷ Cruise control.

The illustration shows the possible full equipment level. For further details, please consult the description of the relevant item of equipment.

Buttons facing the driver

1 Cruise control: activate/interrupt/deactivate
2 Continue cruise control
3 Horn
4 Cruise control: store and accelerate with +
5 Cruise control: store and decelerate with –

Buttons facing away from the driver

Left:

1 ▷ Radio
Press briefly: selection of the station memory in the FM and AM range
Extended pressure: station scan
▷ CD
Press briefly: jump to next track
Extended pressure: title scan
▷ Cassette
Press briefly: jump to next track or stop fast forward
Extended pressure: fast forward/rewind

Right:

1 Volume
2 Changing between radio, cassette and CD

Online Edition for Part-No. 01 41 0 156 890 - © 09/02 BMW AG

Online Edition for Part-No. 01 41 0 156 890 - © 09/02 BMW AG

OVERVIEW

CONTROLS

OPERATION, CARE, MAINTENANCE

OWNER SERVICE PROCEDURES

TECHNICAL DATA

INDEX

Online Edition for Part-No. 01 41 0 156 890 - © 09/02 BMW AG

Depending on the how the vehicle is equipped, your MINI has up to four keys:

1 Master key with remote control and battery

If the battery is discharged, please consult your MINI Dealer. Battery changing, see next column.◀

2 Door and ignition key
The doors can only be opened mechanically with this key

3 Spare key to keep in a safe place, e.g. in your wallet. This key is not intended for constant use

Changing battery

Replace if it is no longer possible to unlock the vehicle via the remote control.

Only use a battery of the type specified on the battery – CR 2032 – and make absolutely sure that it is fitted in the correct position.◀

1. Apply a screwdriver at the recess
2. Use the screwdriver to lever out the cover.

Return used batteries to a recycling point or your MINI Dealer.◀

Initializing the master key with remote control

When you activate a master key with remote control – for example a replacement or additional key, or after a battery change – it must be initialized.

This initialization can be performed in two ways:

Press button 1 or button 2, see page 24, four times in succession

or

if the vehicle is unlocked:

1. Switch the ignition on briefly – position 2 – and then off
2. Within 10 seconds, press button 1 and button 2, see page 24, in succession.

In the event of a system malfunction, please contact your MINI Dealer. You can also obtain replacement keys and batteries there.◀

Online Edition for Part-No. 01 41 0 156 890 - © 09/02 BMW AG

CENTRAL LOCKING SYSTEM

The concept

The central locking system is ready for operation whenever the driver's door is closed. The doors, the tailgate and the fuel filler door are unlocked or locked.

The central locking system secures your MINI:

▷ When operated from the outside via the remote control as well as via the door lock
▷ When operated from the inside via a switch
▷ Automatically, as soon as you start driving.

If operated from outside, the anti-theft system is activated at the same time. This prevents the doors from being unlocked via safety lock buttons or door handles.

The alarm system is also armed or disarmed; refer to page 31.

In the event of an accident, the central locking system unlocks automatically. The hazard warning system and interior lamps are also switched on.

OPENING AND CLOSING – FROM OUTSIDE

Via remote control

The remote control gives you an exceptionally convenient method for unlocking and locking your vehicle. It also offers another function:

To open the tailgate, refer to page 24.
The tailgate will open slightly, the vehicle is unlocked at the same time.

Whenever you unlock/lock the vehicle, you simultaneously deactivate/activate the anti-theft system and optional alarm system and the interior lamps are switched on/off.

If the vehicle has been properly locked using the remote control, the hazard warning system lights up once.
When the vehicle is unlocked, the hazard warning system does not react.

⚠ Children might be able to lock the doors from the inside. Always take the vehicle keys with you so that the vehicle can be opened again from the outside at any time.◀

For US owners only

The transmitter and receiver units comply with part 15 of the FCC, Federal Communications Commission, regulations. Operation is governed by the following:

FCC ID: LX8765S
LX8765E
LX8CAS

Compliance statement:

This device complies with part 15 of the FCC Rules. Operation is subject to the following two conditions:

▷ This device may not cause harmful interference, and
▷ this device must accept any interference received, including interference that may cause undesired operation.

▷ Any unauthorized modifications or changes to these devices could void the user's authority to operate this equipment.◀

Online Edition for Part-No. 01 41 0 156 890 - © 09/02 BMW AG

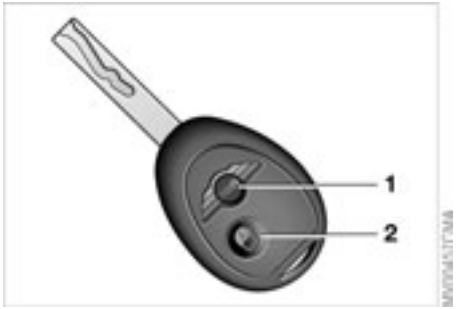

1 Unlocking and opening the tailgate

2 Locking and securing

If the remote control does not react, the battery is discharged. In the event of a system malfunction, please contact your MINI Dealer. You can also obtain replacement keys and batteries there. Battery changing, see page 22.◀

To unlock

1. Press button 1 once to unlock the driver's door only
2. Press button 1 a second time to unlock the other door as well as the tailgate and the fuel filler door.

You can have this function activated/deactivated by your MINI Dealer.◀

When the vehicle is unlocked, the hazard warning system does not react.

To open the tailgate

Hold button 1 pressed for approx. five seconds. The tailgate opens slightly.

The vehicle is simultaneously unlocked, and the anti-theft system and optional alarm system are deactivated. After closing the tailgate the vehicle must be locked again and secured, see next column.◀

You can have the opening of the tailgate with the remote control activated/deactivated.◀

Before and after a trip, be sure that the tailgate was not opened unintentionally.◀

To lock and secure

Press button 2.
The hazard warning system flashes once.

Online Edition for Part-No. 01 41 0 156 890 - © 09/02 BMW AG

To turn off tilt alarm sensor* and interior protection*

Press button 2 again directly after locking.

For more on the tilt alarm sensor and interior protection, see page 32.

Non-MINI systems

External systems or devices may cause local interference in the functions of the remote control.

In this case, use the master key to unlock the door lock.

Via the door lock

Do not lock the vehicle if there are passengers still inside, because they cannot unlock the doors.◀

1. One turn of the key in the driver's door lock unlocks the driver's door only
2. Turning the key a second time unlocks the other door, the tailgate and the fuel filler door.

You can have this function activated/deactivated by your MINI Dealer.◀

If the vehicle has been properly locked, the hazard warning system flashes once.
When the vehicle is unlocked, the hazard warning system does not react.

Manual operation

– in the event of electrical malfunction –

Turn the key to the extreme left or right to unlock/lock the door.

Convenience operation

You can also open the power windows and the sliding/tilt sunroof via the door lock.

With the door closed, hold the key in the unlock position.

You can have this function activated/deactivated by your MINI Dealer.◀

Online Edition for Part-No. 01 41 0 156 890 - © 09/02 BMW AG

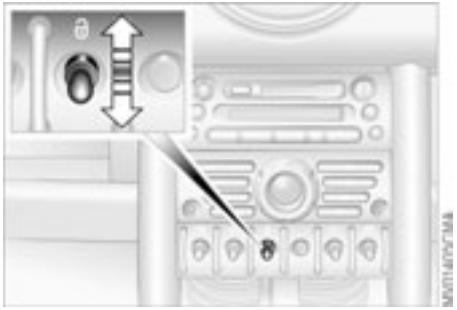

With this switch, you operate the central locking system when the doors are closed. The doors and tailgate are unlocked or locked only. The anti-theft system is not activated.

Also, the fuel filler door remains unlocked to allow refueling.

If the remote control has been used to unlock only the driver's door, see page 24, and you touch the switch when the driver's door is open, the other door, the tailgate, and the fuel filler door are unlocked.
If the driver's door is closed, touching the switch locks it.◀

To unlock and open the doors

1. Touch the switch for the central locking system
2. Pull the door handle above the armrest

or

pull the door handle for each door twice: to unlock first and then open.

Convenience opening mode

From ignition key position 1:

Hold the switch in the Unlock position.
The windows and sliding/tilt sunroof open.

Convenience opening mode is simultaneously deactivated via the Vehicle Memory when convenience opening mode is deactivated via the door lock; refer to page 25.◀

Convenience closing is not possible by means of this switch. You should therefore close all the windows and the sliding/tilt sunroof individually.◀

To lock

Touch the switch for the central locking system

or

press the individual safety lock buttons down.

The central locking automatically secures your MINI as soon as you start to drive.◀

You can have this function activated/deactivated by your MINI Dealer.◀

Children might be able to lock the doors from the inside. Always take the vehicle's keys with you so that you can open the vehicle again from the outside at any time.◀

Online Edition for Part-No. 01 41 0 156 890 - © 09/02 BMW AG

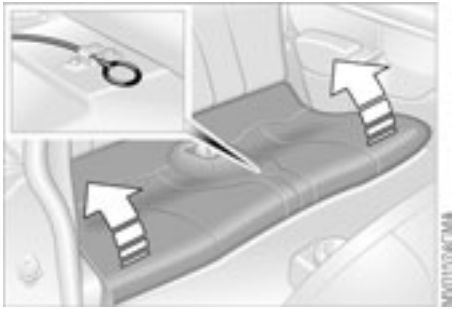

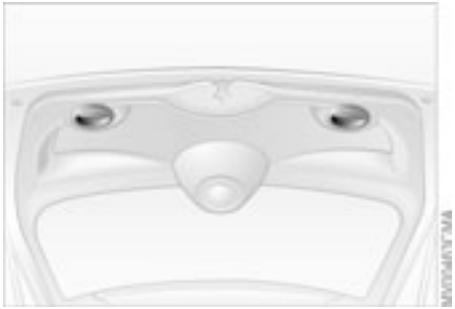

To open from the outside

Press the button in the handle.
The tailgate opens slightly.

Opening with the remote control, see page 24.

Manual operation

In the event of an electrical malfunction, you can also operate the tailgate manually.

1. Fold the rear seat bench upwards
2. Pull the ring.
   The tailgate is unlocked.

To close

The handle recesses in the interior trim panel of the tailgate make it easier to pull the lid down.

To avoid injuries, be sure that the travel path of the tailgate is clear when it is closed, as with all closing procedures.
Operate the vehicle only when the tailgate is closed. Otherwise, exhaust fumes could penetrate the interior of the vehicle.
Should it be absolutely necessary to operate the vehicle with the tailgate open:

1. Close all windows. Shut the sliding/tilt sunroof
2. Sharply increase the air supply for the air conditioning or automatic climate control, see pages 67 or 70.◀

Online Edition for Part-No. 01 41 0 156 890 - © 09/02 BMW AG

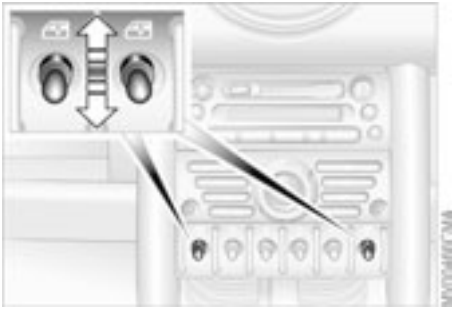

To open and close windows

From ignition key position 1:

To open:

Press the switch downwards.
The window opens until you release the switch

or

briefly press the switch downwards.
The window opens automatically.
Pressing the switch again stops the operation.

To close:

Press the switch upwards.
The window closes until you release the switch.

The window on the front passenger side cannot be closed automatically.◀

Watch during the closing process to be sure that no one is injured.◀

After the ignition has been switched off:

You can use the electric power windows as long as no one opens any of the doors.
If a door is opened during operation, the opening/closing process stops immediately.

When leaving the vehicle, always remove the ignition key from the lock and remember to close the doors, e.g. to prevent children from operating the power windows and injuring themselves.◀

For the convenience mode via the door lock, refer to page 25.

To initialize power windows

If the battery is disconnected, e.g. for changing batteries or vehicle storage, re-initialize the power windows. Otherwise the windows will not be lowered when the door is opened.◀

1. Close the doors
2. Close both windows
3. Hold both switches of the power windows up for approx. one second.

In the event of a system malfunction, please contact your MINI Dealer.◀

Online Edition for Part-No. 01 41 0 156 890 - © 09/02 BMW AG

SLIDING/TILT SUNROOF*

To prevent injuries, exercise care when closing the sliding/tilt sunroof and keep it in your field of vision until it is shut. Make sure that the closing path of the sliding/tilt sunroof is clear.
When leaving the vehicle, always remove the ignition key from the lock and remember to close the doors, e.g. to prevent children from operating the sunroof and injuring themselves.
Be sure that adequate clearance is maintained for the opening path of the sliding/tilt sunroof, otherwise damage can occur.◀

For convenience operation via the door lock, refer to page 25.

Raising – Opening – Closing

From ignition key position 1:

To raise

Press the switch

or

push the switch backwards to the resistance point.

To open and close

1. Push the switch in the desired direction until you feel resistance, and hold in this position
2. Release the switch when the desired sunroof position has been reached.

Do not use force to close the sliding/tilt sunroof in its raised position, as damage to the mechanism could result.◀

After the ignition has been switched off:

You can still operate the sliding/tilt sunroof for up to one minute, as long as no one opens any of the doors.
If a door is opened during operation, the opening/closing stops immediately.

Automatic opening

Push the switch back past the point of resistance:

The sunroof opens completely.

Touching the switch briefly during opening stops the movement immediately.

Online Edition for Part-No. 01 41 0 156 890 - © 09/02 BMW AG

SLIDING/TILT SUNROOF*

Manual opening and closing

In the event of an electrical malfunction, you can also operate the sliding/tilt sunroof manually:

1. Push the clock towards the interior and remove
2. Use an Allen wrench to turn the sliding/tilt sunroof in the desired direction.

ROLLER SUN BLIND*

1 Opening

1. Press the button in the handle, see arrow 1.
   The cap is unlocked
2. Guide the roller sun blind towards the back.

2 Closing

1. Use the handle to pull the roller sun blind forwards
2. Engage the handle in the device, see arrow 2.

Online Edition for Part-No. 01 41 0 156 890 - © 09/02 BMW AG

ALARM SYSTEM*

The concept

The alarm system reacts if:

▷ A door, the bonnet or the tailgate is opened
▷ There is any movement inside the vehicle – interior motion sensor
▷ There is a change in the tilt angle of the vehicle, e.g. during attempts to steal wheels or tow away the vehicle
▷ There is interruption of the battery voltage.

Depending on the country-specific version, the alarm system signals unauthorized entry or tampering in different ways:

▷ Acoustic alarm for 30 seconds
▷ Turning on the hazard warning flashers for approx. five minutes.

To arm and disarm the alarm system

When the vehicle is locked or unlocked via the driver's door lock or with the remote control, the alarm system is also simultaneously armed or disarmed.

The interior motion and tilt alarm sensors are also activated with the closing action.

▷ The alarm system cannot be armed if the driver's door is not properly closed.
In some country-specific versions the alarm system can only be operated with the remote control.
Unlocking these vehicles with the key triggers the alarm.
To stop the alarm:
Press button 1 – unlock –
or
turn the ignition key to position 1.◀

Indicator lamp

Alarm system:

▷ Indicator lamp in the wiper system lever changes after 10 seconds from fast blinking to constant flashing:
The system is activated
▷ Indicator lamp does not react:
Doors, bonnet or tailgate are not properly closed.
Even if these are not closed any more, the alarm system is activated and secures the remaining part of the vehicle. If everything is closed, the indicator lamp changes after 10 seconds from fast blinking to constant flashing

Online Edition for Part-No. 01 41 0 156 890 - © 09/02 BMW AG

▷ Indicator lamp goes out when the system is disarmed:
No tampering with your vehicle has been detected
▷ Indicator lamp continues to flash at a slow rate after the system is disarmed:
Your vehicle has been tampered with.
The indicator lamp will not go out until the ignition key is turned in the ignition lock or the alarm system is re-armed.

Interior motion sensor:

▷ Indicator lamp does not react:
Doors or tailgate are not properly closed
▷ Indicator lamp flashes constantly:
Only driver/passenger window and sliding/tilt sunroof is open.
Interior motion sensor is not activated.
Alarm system is armed
▷ Indicator lamp is lit somewhat longer and then flashes constantly:
Window and/or sliding/tilt sunroof were closed after the system was armed:
interior motion sensor is not activated.

Avoiding unwanted alarm

The tilt alarm and interior motion sensors may be turned off at the same time. This will prevent unwanted alarms, e.g. in duplex garages or when on car transport trains:

Lock the vehicle twice – activating:

Press button 2 of the remote control twice in succession, see page 25

or

lock with the key twice, see page 25.

The indicator lamp goes from fast blinking to regular blinking. After approx. ten seconds the indicator lamp changes to constant flashing. The tilt alarm and interior motion sensors are deactivated until the system is disarmed.

Interior motion sensor

Transmitter and receiver of the interior motion sensor system are found under a cover in the vehicle roof.

For the interior motion sensor to function properly, the windows, sliding/tilt sunroof and doors must be closed.

Turn off the interior motion sensor – see previous column – if

▷ children or animals remain in the vehicle
▷ windows or the sliding/tilt sunroof remain open.

The tilt alarm and interior motion sensors are inadvertently turned off if the convenience closing of windows and sliding/tilt sunroof is interrupted in the first 10 seconds and then restarted. The alarm must then be disarmed and reactivated.◀

Online Edition for Part-No. 01 41 0 156 890 - © 09/02 BMW AG

SAFE SEATING POSITION

The ideal seating position can make a vital contribution to relaxed, fatigue-free driving. Together with the safety belts and airbags, the seating position plays an important role in providing occupants with maximum levels of passive safety in an accident. To ensure that the safety systems operate with optimal efficiency, we strongly urge you to observe the instructions contained in the following section.

For supplementary information on transporting children, refer to page 41.

Sitting safely with airbags

Always maintain an adequate distance between yourself and all of the airbags. Always hold the steering wheel by the rim with the hands at the 9 and 3 o'clock positions to keep any chance of injury to hands or arms to an absolute minimum, should the airbag be deployed. No one and nothing is to come between the airbags and the seat occupant. Never use the front passenger airbag cover as a storage surface for objects of any kind, or as a support for legs or feet, as this will increase the risk of injury in a collision severe enough in which the airbag will deploy.◀

For airbag locations and additional information on airbags, refer to page 40.

Safe with safety belts

Never allow more than one person to wear a single safety belt. Never allow infants or small children to ride in a passenger's lap. Avoid twisting the belt while routing it firmly across the hips and shoulder, wear it as snugly against your body as possible. Do not allow the belt to rest against hard or fragile objects. Do not route the belt across your neck, or run it across sharp edges. Be sure that the belt does not become caught or jammed.
Avoid wearing bulky clothing that prevents the belt from fitting properly, and pull on the belt periodically to retension it over your shoulders. In the event of a frontal impact, a loose lap belt could slide over the hips, leading to abdominal injury. In addition, the safety belt's restraint effectiveness is reduced if the belt is worn loosely. Expectant mothers should always wear their safety belts, taking care to position the lap belt against the lower hips, where it will not exert pressure against the abdominal area.◀

For information on using the safety belts, refer to page 38.

Online Edition for Part-No. 01 41 0 156 890 - © 09/02 BMW AG

Important adjustment information

Never try to adjust your seat while operating the vehicle. The seat could respond with an unexpected movement, and the ensuing loss of vehicle control could lead to an accident.
Never ride with the backrest reclined to an extreme horizontal angle – especially important for front passengers to remember. Keep the backrest relatively upright to minimize the risk of sliding under the safety belt and sustaining injury in an accident.◀

To adjust the seats, see the following section.

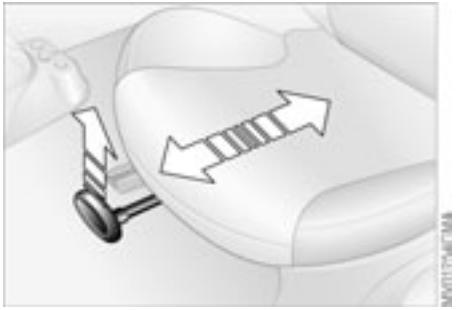

Longitudinal seat adjustment

1. Lift the handle
2. Push the seat into the desired position
3. After releasing the handle, apply pressure to the seat to ensure that the latch engages securely.

Make corrections in the longitudinal adjustment of the seat to ensure that the safety belt still fits firmly against your body. If you do not do this, the protection provided by the safety belt may be reduced.◀

Seat height

1. To raise:
   Pull the handle up repeatedly, continuing until the seat reaches the desired height
2. To lower:
   Push the handle repeatedly, continuing until the seat reaches the desired height.

Online Edition for Part-No. 01 41 0 156 890 - © 09/02 BMW AG

Lumbar support*

You can adjust the contour of the backrest for additional support in the curvature of your spine's lumbar region. The upper hips and spinal column receive supplementary support to help you maintain a relaxed, upright posture.

Turn the wheel.
The contour is strengthened or weakened.

Backrest tilt

1. Pull up the lever at the inside of the seat
2. Apply weight to or remove weight from the backrest as required
3. Release the lever so that the backrest locks into place.

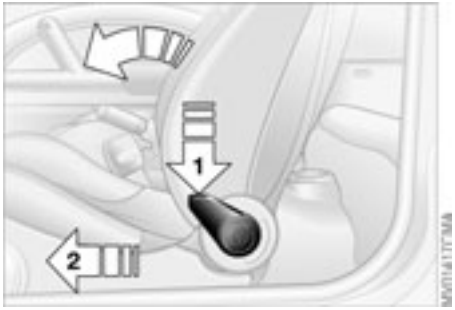

Easy entry

The Easy entry function includes a memory for the longitudinal seat and the backrest positions.

1. Push down the lever at the outside of the seat, see arrow 1.
   The backrest folds forward automatically
2. Push the seat forwards, see arrow 2.

Original position

Slide the seat back to its home position before folding back the backrest, otherwise the seat is latched in at its current position. Then make any longitudinal adjustment manually, see page 34.

1. Push the seat back into its home position

Online Edition for Part-No. 01 41 0 156 890 - © 09/02 BMW AG

ENTRY TO THE REAR

2. Fold the backrest back to the home position to lock the seat.

When returning the seat to the rear position, ensure that no one is injured and that no objects are damaged. Engage and lock both seats and backrests into position prior to driving, otherwise unexpected movement could increase the risk of accident.◀

HEATED SEATS*

The seat cushion and backrest can be heated with the ignition key in position 2.

Select the temperature setting:

Press each button briefly.

Direct deactivation from the second temperature setting:

Press the button for a longer period.

Online Edition for Part-No. 01 41 0 156 890 - © 09/02 BMW AG

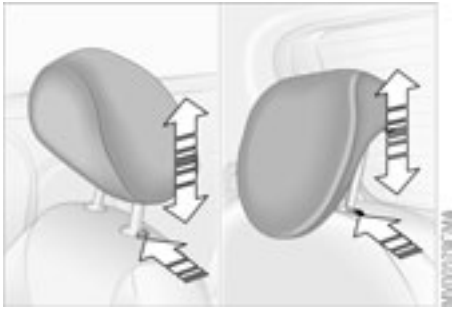

Adjusting the head restraints

To raise: pull the head restraint upward.

To lower: press the button and push the head restraint downward.

You can reduce the risk of spinal injury and whiplash by adjusting the head restraint to a height at which it is centered roughly at ear level.◀

Removal

1. Pull up the head restraint, continuing until it is at maximum extension
2. Press the button and remove the head restraint at the same time.

Installation

1. Press the button and at the same time insert the head restraint in the reception points
2. Adjust the head restraint.

To avoid possible violation of traffic laws, never retract the head restraints unless the rear seats are empty. Always ensure that the head restraints are raised before transporting passengers in the rear seat.◀

Online Edition for Part-No. 01 41 0 156 890 - © 09/02 BMW AG

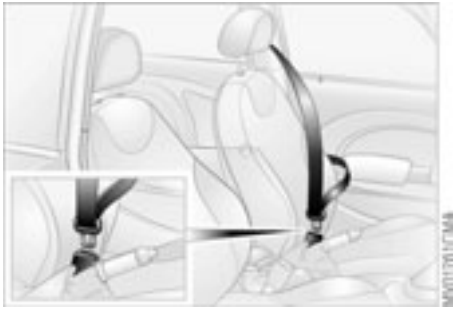

Drive with your safety belt on

Even though there is an airbag, always fasten your seat belt before driving off, because airbags are designed to enhance the effectiveness of the safety belts, not to replace them.

To fasten

Make sure you hear the lock engage in the belt buckle.

The warning lamp – Fasten safety belts – lights up for several seconds or until after the safety belts are fastened.

To release

1. Press the red button in the belt buckle
2. Hold the belt
3. Guide the belt back into its reel.

Safety belt height adjustment

Use the height adjustment mechanism to adapt the safety belt to the ideal position for your own body:

Press the button and at the same time push the entire unit upwards or downwards.

Also observe the instructions on adjusting the seats on page 33.

If the safety belts are damaged or stretched in an accident: have the safety belt system replaced by your MINI Dealer and the belt anchors checked, otherwise the safety function can no longer be guaranteed. If a child-restraint system was in the vehicle during an accident, consult the manufacturer's instructions regarding replacement.◀

To adjust the steering wheel height

1. Push the locking lever downward
2. Adjust the desired steering wheel position
3. Pull the lever back in.

Do not adjust the steering wheel while the vehicle is moving, otherwise unexpected movement could increase the risk of accident.◀

Online Edition for Part-No. 01 41 0 156 890 - © 09/02 BMW AG

Adjusting exterior mirrors

1 Switch for choosing between the left and right mirror

2 Switch for 4-way adjustment

Manual adjustment

The mirrors can also be adjusted manually:

Press the edge of the lens.

Electric heating*

Both mirrors are heated automatically when the ignition key is in position 2.

Interior rearview mirror

To reduce glare from vehicles behind you when you are driving at night:

Tilt the lever forward.

Illuminated vanity mirror

From ignition key position 1:

1. Fold down the sun visor
2. Fold the cover panel upwards.

Sun visors

Can be swung sideways.

Interior mirror, automatic dimming*

This mirror dims automatically as required.

The mirror becomes clear again when you engage reverse gear or select position R on the selector lever.

Keep the photocells free and clean to ensure that the mirror functions perfectly. There is one photocell in the mirror frame; the other is on the back of the mirror.

▷ Do not cover the area between the inside rearview mirror and the windshield, and do not place stickers or toll tags on the windshield in front of the mirror.◀

Online Edition for Part-No. 01 41 0 156 890 - © 09/02 BMW AG

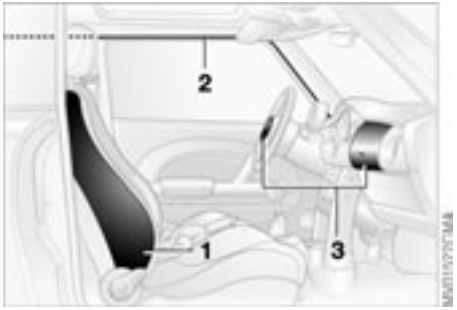

1 Side airbags in seatback on the driver and passenger side – front
2 Head airbags on the driver and passenger sides for both rows of seats – front/rear
3 Front airbags on the driver and passenger sides

Protective effect

The front airbags supplement the safety belts by providing additional protection for the driver and front passenger in the event of a frontal collision in which the protection afforded by the belts alone may no longer be sufficient.
When needed, the head and side airbags help to furnish protection in the event of side impact.

Each of the side airbags is designed to help support the seat occupant's upper body.

For information on sitting posture, refer to page 33.

The airbags do not deploy in response to minor collisions, rear impacts and certain kinds of vehicle rollover.◀

Even when all safety guidelines are observed, there is a small residual risk that passengers will sustain facial, hand or arm injuries in isolated instances. The ignition and inflation noise may induce a mild temporary hearing loss in sensitive individuals.

Do not apply adhesive materials to the cover panels of the airbags, cover them or modify them in any other way. Do not fit covers, cushions or other items to the front seats that have not been specially approved for seats with side airbags. Do not hang clothing, e.g. jackets, over the backrests. Do not attempt to remove the airbag restraint system from the vehicle. In the event of malfunctions, immobilization or use, i.e. triggering, of the airbag restraint system in accordance with its intended function, commission a MINI Dealer with the inspection, repair or disassembly. Do not make any changes yourself to the individual components and wiring. This includes the padded covers of the steering wheel, instrument panel and the roof supports, as well as the sides of the roofliner and the original backrest covers on the front seats. Do not attempt to remove or dismantle the steering wheel. In view of the applicable safety regulations, arrange for your MINI Dealer to dispose of the airbag generators. Unprofessional attempts to service the system could lead to failure in an emergency or undesired airbag activation, either of which could result in personal injury. Do not touch the individual components directly after the system has been triggered, as otherwise there is a danger of burns.◀

At all times, occupants should sit upright and be properly restrained, infants and small children in appropriate child-restraint systems, larger children and adults using the safety belts. Never let an occupant's head rest near or on a head airbag because the inflating airbag could cause serious or fatal injury. A child which is not properly restrained could place his or her head on or near the airbag.◀

Online Edition for Part-No. 01 41 0 156 890 - © 09/02 BMW AG

Indicator lamp

The indicator lamp on the instrument panel shows the airbag system status starting from ignition key position 1.

System operational:

▷ The indicator lamp comes on briefly.

System malfunction:

▷ The indicator lamp does not come on
▷ The indicator lamp fails to go out after the engine has been started, or it comes on during normal driving.

A system defect could prevent the airbags from deploying in response to a severe impact occurring within the system's normal triggering range.

Have the airbag system checked as soon as possible by your MINI Dealer.

TRANSPORTING CHILDREN SAFELY

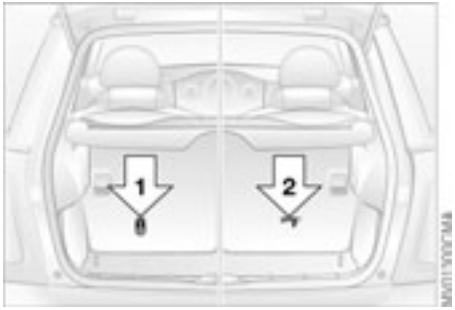

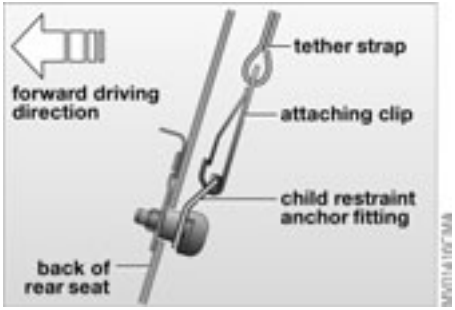

Children younger than 12 years of age or smaller than 5 ft / 150 cm must be transported in suitable child-restraint system. Otherwise there is an increased risk of injury in the event of an accident.

Commercially-available child-restraint systems are designed to be secured with a lap belt or with the lap belt portion of a combination lap/shoulder belt. Improperly or inadequately installed restraint systems can increase the risk of injury to children. Always read and follow the instructions that come with the system.

If you use a child-restraint system with a tether strap:

Your vehicle has one of two different types of child-restraint anchor fittings on the back of the rear seats, see arrows 1 or 2.

Depending on the location selected for seating in the rear passenger area, attach the tether strap to the corresponding anchorage point to secure the child-restraint system.

Adjust the tether strap according to the child-restraint manufacturer's instructions.

▷ Anchor fitting 1 is shown above. Anchor fitting 2 is shown in the next column.◀

Online Edition for Part-No. 01 41 0 156 890 - © 09/02 BMW AG

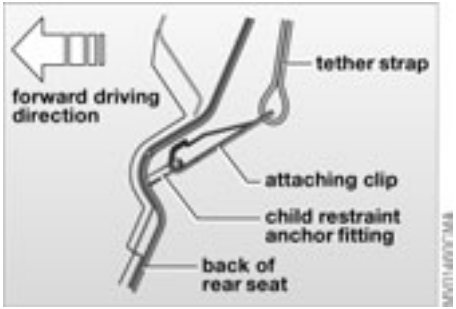

Both seating positions are fitted with a head restraint. Lift the head restraint and pass the tether strap between the head restraint and the seat back. It is recommended to readjust the head restraint into the lowest possible position.

Adjust the tether strap according to the child-restraint manufacturer's instructions. Before installing any child-restraint system, please read the following:
Never install a rearward-facing child-restraint system in the front passenger seat of this vehicle.
Your vehicle is equipped with an airbag supplemental restraint system for the front passenger. Because the backrest on any rearward-facing child-restraint system – of the kind designed for infants under 1 year and 20 lbs. / 9 kg – would be within the airbag's deployment range, you should never mount such a device in the front passenger seat, since the impact of the airbag against the child-restraint's backrest could lead to serious or fatal injuries.
If it is necessary for a child – not an infant – to ride in the front seat, certain precautions should be taken. First, move the passenger seat as far away from the instrument panel as possible. This important precaution is intended to maximize the distance between the airbag and the child. Older children should be tightly secured with a safety belt, after they have outgrown a booster seat that is appropriate for their age, height and weight. Younger children should be secured in an appropriate forward-facing child-restraint system that has first been properly secured with a safety belt. Never install a rearward-facing child-restraint system in the front passenger seat.
We strongly urge you to carefully read and comply with the instructions for installation and use provided by the child-restraint's manufacturer whenever you use such a device.
Be sure that all occupants – of all ages – remain properly and securely restrained at all times.
According to accident statistics, children are safer when properly restrained in the rear seats than in the front seating positions.◀

All rear seats in your vehicle conform to the guidelines defined in SAE J1819, an industry recommended practice for securing child-restraint systems in motor vehicles.

Online Edition for Part-No. 01 41 0 156 890 - © 09/02 BMW AG

Child seat security

All of the rear belt retractors and the front passenger's safety belt can be locked for mounting and securing child-restraint systems.

Information regarding this is located near the buckle latch of each safety belt.

To lock the belt

Pull the entire length of the belt from the belt retractor. Allow the reel to retract the belt somewhat and engage the buckle, then tighten the belt against the child-restraint system.
The retraction mechanism is now locked.

To unlock the belt

Release the buckle, remove the child-restraint system and allow the belt retractor to reel the belt completely in.

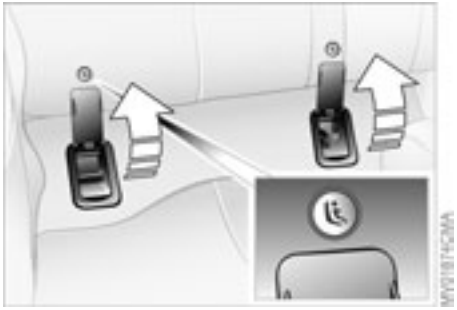

LATCH child-restraint system

Open the cover.

The illustration is an example showing the mounts for the LATCH, Lower Anchors and Tethers for CHildren, child-restraint mounting system at the right rear.
The system is also available at the left rear position.

Canadian models only:
The LATCH anchorage points are identified by buttons, see illustration.

Always follow all manufacturer's instructions and observe all safety precautions when installing the LATCH child-restraint system.◀

Online Edition for Part-No. 01 41 0 156 890 - © 09/02 BMW AG

VEHICLE MEMORY

How the system functions

No doubt you have often reflected on how great it would be if you could configure your vehicle's various adjustment settings to meet your own personal requirements. In developing this vehicle, the manufacturer of the MINI has incorporated a number of options that your MINI Dealer can program to reflect your individual preferences.

What the system can do

Your MINI Dealer can provide you with details on the capabilities of the Vehicle Memory system.

Examples for Vehicle Memory:

- ▷ Automatic locking after starting to drive, see page 26
- ▷ Selective central locking system, see pages 24, 25
- ▷ Automatically opening the sliding/tilt sunroof, see page 29
- ▷ Convenience opening, see pages 24, 25, 26
- ▷ Delayed lighting shut off, "Follow-me-home" lamps, see page 52
- ▷ Daytime driving lamps, see page 52
- ▷ Speed-dependent windshield wipers, see page 55
- ▷ Acoustic ignition key warning, see page 45
- ▷ Fuel consumption display, see page 61
- ▷ Temperature display, see page 61
- ▷ Volume control PDC, see page 66
- ▷ Acoustic alarm for starting PDC activation, see page 66

This symbol alerts you to Vehicle Memory functions in the Owner's Manual◀

Online Edition for Part-No. 01 41 0 156 890 - © 09/02 BMW AG

0 Steering locked

1 Steering unlocked

2 Ignition switched on

3 Starting the engine

0 Steering locked

The key can be inserted or removed in this position only.

To lock the steering:

1. Remove the key
2. Turn the steering wheel slightly to the left or right until the lock engages.

A sound alarm goes off if the key remains in the ignition after opening the driver's door.◀

You can have this function activated/deactivated by your MINI Dealer.◀

Vehicles with Continuously Variable automatic Transmission (CVT): Do not move the selector lever from position P until the engine is running. Your vehicle is equipped with an interlock. Therefore, the ignition key cannot be turned to position 0 and removed until the selector lever is in position P – Interlock.◀

1 Steering unlocked

Individual electrical accessories are ready for operation.

You will find that it is often easier to turn the ignition key from position 0 to position 1 when you move the steering wheel slightly to help disengage the lock.

2 Ignition switched on

All electrical accessories are ready for operation.

3 Starting the engine

Vehicles with manual transmission: Step on the clutch when starting the vehicle. A lockout prevents the engine from starting if the clutch is not depressed.◀

Online Edition for Part-No. 01 41 0 156 890 - © 09/02 BMW AG

Do not allow the engine to warm up with the vehicle at a standstill. Move off immediately at a moderate engine speed.

Do not allow the engine to run in enclosed spaces. The exhaust gases contain carbon monoxide, an odorless and colorless, but highly toxic gas. Breathing the exhaust gases poses an extreme health risk, and can lead to unconsciousness and death.
Do not leave the vehicle unattended with the engine running. This is a safety hazard.
When driving, standing at idle or parking the vehicle, take care to avoid contact between the hot exhaust system and flammable materials – e.g. hay, leaves, grass, etc. Such contact could lead to a fire, resulting in serious personal injury and property damage.◀

Starting

When starting the engine, do not press the accelerator pedal.

Do not actuate the starter for too short a time. Do not turn it for more than approx. 20 seconds. Release the ignition key immediately when the engine starts.
Extended starting attempts, characterized by excessively frequent or long periods with the starter engaged, can lead to damage in the catalytic converter.◀

If the engine does not start on the first attempt, for instance if the engine is very hot or cold:

▷ When starting the engine, press the gas pedal down halfway.

When first starting the engine at very low temperatures – from +5 °F / –15 °C:

▷ When starting the engine, press the gas pedal down halfway
▷ For the initial start attempt, allow the starter to remain engaged somewhat longer, approx. 10 seconds.

Manual transmission

1. Engage the parking brake
2. Put the manual gearshift lever in neutral
3. Press the clutch pedal
4. Start the engine.

Continuously Variable automatic Transmission (CVT)*

1. Press the footbrake
2. Put the selector lever in position P or N
3. Start the engine.

Move the selector lever to position P and engage the parking brake before leaving your vehicle with the engine running.
Do not leave the vehicle unattended with the engine running. This is a safety hazard.◀

Online Edition for Part-No. 01 41 0 156 890 - © 09/02 BMW AG

SWITCHING OFF THE ENGINE

You should never remove the ignition key when the vehicle is in motion, as the steering lock could engage.
When you leave the vehicle, always remove the ignition key and engage the steering lock.
When you park on downward slopes, engage the parking brake.◀

Manual transmission

Turn the ignition key to position 1 or 0.

Continuously Variable automatic Transmission (CVT)*

Engage selector lever position P, turn the ignition key to position 1 or 0.

PARKING BRAKE

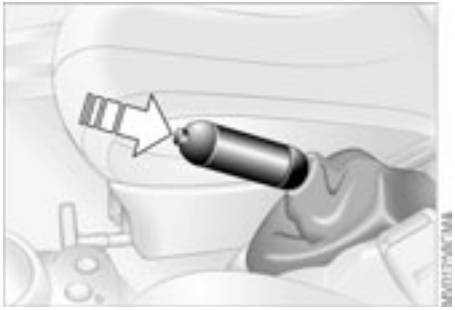

The parking brake is designed primarily to prevent the vehicle from rolling when it is parked. It operates against the rear wheels.

To engage

Lever automatically locks in position.
The warning lamp in the instrument cluster comes on when the ignition key is in position 2, see page 16.

To release

1. Pull up slightly
2. Press the button
3. Push the lever downwards.

If, in exceptional circumstances, it should be necessary to engage the parking brake while the vehicle is in motion, do not pull the lever with excessive pressure. Keep your thumb pressed against the release button while carefully pulling the lever up to apply moderate pressure. Excessive pressure can lead to overbraking and loss of traction, i.e. fishtailing, at the rear axle.
The brake lamps do not come on when the parking brake is engaged.
Vehicles with manual transmission:
Always engage the parking brake when parking on hills and inclined surfaces, as first gear or reverse may not provide adequate resistance to rolling.
Vehicles with CVT:
Place the selector lever in P.◀

Online Edition for Part-No. 01 41 0 156 890 - © 09/02 BMW AG

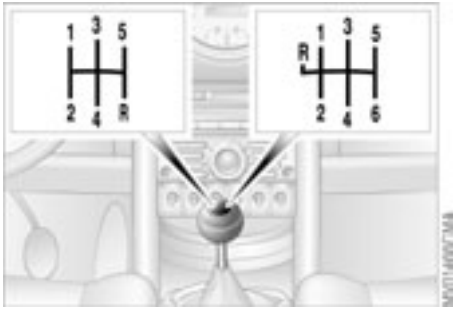

The manual gearshift lever neutral plane lies in the gear plane of the 3rd / 4th gear.

When shifting from each gear into Neutral, the manual gearshift lever springs back automatically into the gearshift lever neutral plane.

6-speed transmission*

When changing gear in the 5th/6th gear plane, press the gearshift lever to the right to prevent inadvertently shifting to a gear of the 3rd/4th gear plane.◀

Reverse

Before selecting reverse gear, ensure the vehicle is stationary; then, fully depress the clutch pedal and pause briefly before moving the gearshift lever into position.

5-speed transmission:
Press the gearshift lever to the right and to the back.

6-speed transmission:
Press the gearshift lever towards the left. Thereby overcome the slight resistance and press forward.

As you do this, the backup lamps will turn on automatically when the ignition key is in position 2.

Do not hold the vehicle in place on slopes by slipping or "riding" the clutch. Use the parking brake instead. Riding the clutch causes the clutch assembly to wear out sooner.◀

Online Edition for Part-No. 01 41 0 156 890 - © 09/02 BMW AG

CONTINUOUSLY VARIABLE AUTOMATIC TRANSMISSION (CVT)*

You can drive with a continuously variable shifting CVT. In addition, you can also shift manually.

When you move the selector lever from the D position to the right into the M/S + – range, the performance-oriented shift programs of the CVT are engaged. Steptronic enters the manual selection mode and executes the desired shift whenever you tap the selector lever in the direction indicated by + or –.

Whenever you want to use automatic again, just move the selector lever toward the left to position D.

Under normal operating conditions, fuel consumption is lowest when driving in position D.

Selector lever positions

P R N D M/S + –

Range selection

Inadvertent engaging of certain selector lever positions is prevented by a lock.

Press the button on the front side of the selector lever knob. The lock is released.

While the vehicle is stationary, and before shifting out of P or N, press the brake pedal in order to disengage the selector lever lock mechanism – Shiftlock.
If the engine speed is too high when the vehicle is at a standstill, the selector lever is also blocked to protect the transmission.
Hold the brake pedal down until starting off. Otherwise the vehicle will "creep" when a drive position is engaged.◀

To prevent the vehicle from starting off on its own, always move the selector lever to position P and engage the parking brake before getting out of your vehicle with the engine running.
Do not leave the vehicle unattended with the engine running. This is a safety hazard.◀

If the selector lever is not placed in position P when the vehicle is parked, the position display of the selector lever stays on. This can lead to battery discharge.◀

Online Edition for Part-No. 01 41 0 156 890 - © 09/02 BMW AG

P Park

Select "P" only when the vehicle is completely stopped. The transmission locks to prevent the rear wheels from turning.

R Reverse

Select "R" only when the vehicle is completely stopped.

N Neutral

Select "N" only if your journey is interrupted for a long period.

D Drive – CVT driving position

This position is designed for driving under all normal operating conditions.

Kickdown

In "kickdown" mode, you achieve maximum acceleration and maximum speed in position D.
Press the accelerator pedal past the increased resistance point at the full-throttle position.

M/S + – Manual mode and Sport program

Switch from D into M/S + –:
Activates the Sport program and displays SD in the gear indicator in the speedometer.

▷ Press briefly:
CVT shifts from the Sport program to the manual mode
▷ Press selector lever briefly towards +:
Transmission shifts upwards
▷ Press selector lever briefly towards – :
Transmission shifts back.

1 to 6 appear in the gear indicator.

The transmission will only execute upshifts and downshifts that will result in a plausible combination of vehicle speed and engine rpm. For instance, downshifts that would result in excessive engine speed are not executed.

Switching from M/S + – into the selector lever positions P, R and N and switching from manual mode back into the Sport program is only possible via D.

Online Edition for Part-No. 01 41 0 156 890 - © 09/02 BMW AG

CONTINUOUSLY VARIABLE AUTOMATIC TRANSMISSION (CVT)*

Avoid high engine loads. Proceed to the nearest MINI Dealer.◀

Do not work in the engine compartment when a drive gear – forward or reverse – is engaged. If you do this, the vehicle could move.◀

Jump-starting and towing, refer to pages 124, 126.◀

Available displays

P R N D SD 1 2 3 4 5 6 EP

Electronic transmission control module

If there is a malfunction in the transmission system, EP appears in the display.

All selector lever positions can still be selected. In positions for driving forward: the vehicle can now only be driven with a limited gear selection.

Online Edition for Part-No. 01 41 0 156 890 - © 09/02 BMW AG

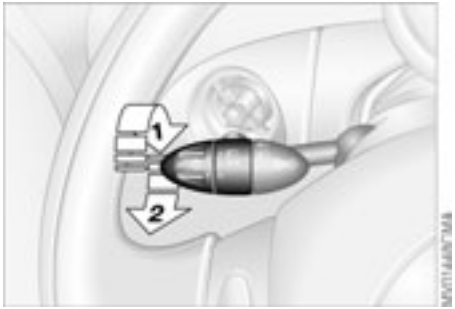

Switching on the parking lamps

Turn to the first position. The front, rear and side vehicle lighting is switched on. Parking light on one side, see following column.

Switching on the low beams

Turn to the second position. With the low beams on and with the ignition switched off, only the parking lamps will remain on.

"Follow me home" lamps

If you switch off the engine with the low beams on, and then switch off the low beams, they remain lit for a set length of time.

You can have this function set by your MINI Dealer.◀

Switching on the standing lamps

For parking, you can activate lights on one side of the vehicle. Observe local laws.

In ignition key position 0:

Move the lever into the relevant turn signal indicator position.

"Lights on" warning

If the lights have not been switched off and the ignition key is in position 0, an acoustic signal sounds for a few seconds when you open the driver's door to remind you that the lights have not been switched off.

Daytime driving lamps*

If you desire, the light switch can be left in the second position:
When the ignition is switched off, the external lighting is also switched off.

You can have this function set by your MINI Dealer.◀

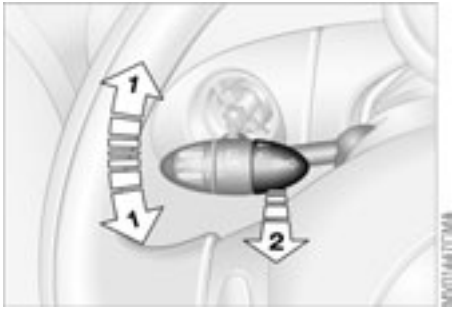

1 Turn signal indicator – green indicator lamps and periodic clicking sound from the relay

2 High beams/Headlamp flasher – blue indicator lamp

To signal briefly

Press the lever up to but not beyond the point of resistance.

If the blinking of the indicator lamp and the clicking from the relay are both faster than normal: one of the turn signal indicators has failed.◀

Online Edition for Part-No. 01 41 0 156 890 - © 09/02 BMW AG

INSTRUMENT LIGHTING

To control the instrument lighting, press the button.

To increase the illumination intensity

Keep the button pressed until the desired brightness is reached.

To decrease the illumination intensity

Press the button briefly.
With each brief pressing of the button, the illumination intensity is reduced in steps.

FOG LAMPS

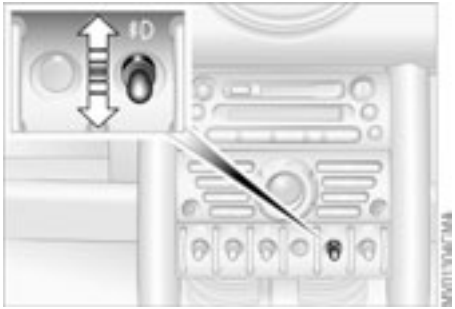

When the parking lamps/low beams are switched on:

Briefly press the switch upwards or downwards.

Briefly press once again to switch off.

Fog lamps*

Fog lamps switched on:

Green light-emitting diode in the switch lights up.

The fog lamps are deactivated whenever the high beams are switched on.

INTERIOR LAMPS

The interior light is controlled automatically.

Switching the interior lamps on and off manually

Press button 1 briefly.

Permanently turn off interior light:

Press button 1 until the interior light comes on briefly.

To reverse this condition, repeat the procedure.

Footwell and cargo area lamps

These lamps are controlled in the same way as the interior light.

Switching the reading lamps on and off

Press button 2.

Online Edition for Part-No. 01 41 0 156 890 - © 09/02 BMW AG

LIGHT-EMITTING DIODES

Light-emitting diodes (LEDs) installed behind translucent lenses serve as the light source for many of the controls and displays in your vehicle. These light-emitting diodes are related to conventional lasers, and legislation defines them as light-emitting diodes, Class 1.

Do not remove the protective lens and avoid staring directly at the unfiltered beam for several hours, as inflammation of the iris could result.◀

WASHER/WIPER SYSTEM

0 Wipers parked

1 Intermittent operation or rain sensor

2 Normal wiper speed

3 Fast wiper speed

4 Brief wipe

5 Clean windshield and headlamps

Intermittent operation

– Not on vehicles with rain sensor –

The interval time for the wipers is dependent on the vehicle speed.

Rain sensor*

The rain sensor is located on the windshield, directly in front of the interior rear-view mirror.
When the rain sensor is activated, the windshield wipers are automatically controlled depending on the amount of water or snow landing on the windshield.

To activate the rain sensor:

From ignition key position 1:

Lever in position 1.
The wipers move across the windshield once.

To deactivate the rain sensor:

Put lever in position 0.

Switch the rain sensor off when passing through an automatic car wash. Failure to do so could result in damage caused by undesired wiper activation.◀

Online Edition for Part-No. 01 41 0 156 890 - © 09/02 BMW AG

Normal wiper speed

The wiper speed is automatically set to interval operation when the car is stopped. Not on vehicles with rain sensor.

You can have this function activated/deactivated by your MINI Dealer.◀

Fast wiper speed

When the vehicle is stationary, the wipers switch automatically to normal wiper speed.
Not on vehicles with rain sensor.

You can have this function activated/deactivated by your MINI Dealer.◀

Cleaning windshield and headlamps*

The system sprays washer fluid against the windshield. The wipers are automatically activated for a brief period.

When the vehicle lighting is on, the headlamps are also cleaned at appropriate intervals.

Do not use the washers if there is any danger that the fluid will freeze on the windshield. If you do so, your vision could be obscured. For this reason, use an antifreeze agent, see page 94.
Do not use the washers when the reservoir is empty, since this could cause damage to the washing pump.◀

Heated windshield washer jets*

The windshield washer jets are heated automatically when the ignition key is in position 2.

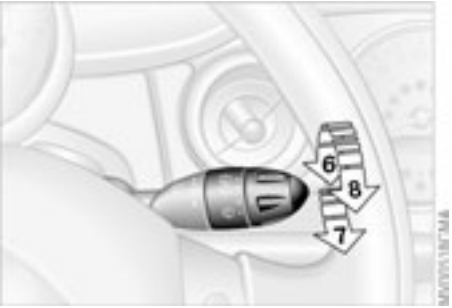

Rear window wiper

6 Intermittent operation:
Turn the cap to position 6.
The rear window wiper moves across the window a number of times before switching to intermittent operation

Cleaning the rear window

7 Intermittent operation:
Turn the cap to position 7 and hold in place

8 In lever position 0:
Turn the cap to position 8 and hold in place

Online Edition for Part-No. 01 41 0 156 890 - © 09/02 BMW AG

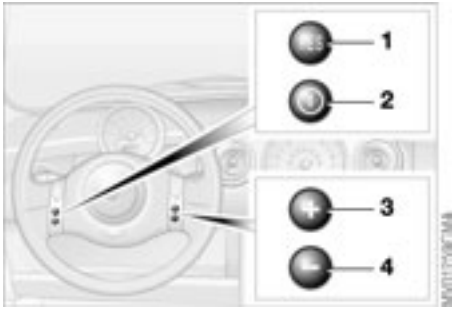

Do not use cruise control on twisting roads, when high traffic density prevents driving at a constant speed, when the road surface is slick, e.g. from snow, rain or ice, nor when the road surface is loose, e.g. from rocks or sand.◀

To activate the system

From ignition key position 1:

Press button 2.

The indicator lamp in the instrument cluster lights up.
Cruise control is active.

To maintain and store speed or to accelerate

The vehicle maintains and stores any desired speed when driving above approx. 20 mph / 30 km/h and, for manual transmissions, when the selector lever is in 3rd gear or higher.

Press button 3.

The system maintains and stores the current vehicle speed. Every time you tap the button, the speed increases by approx. 1 mph / 2 km/h.

Press and hold button 3.

The vehicle accelerates without pressure on the accelerator pedal. When you release the button, the system maintains and stores the current speed.

If, on a downhill gradient, the engine braking effect is not sufficient, the controlled speed may be exceeded. Speed can drop on uphill grades if the engine output is insufficient.◀

To decelerate

Press button 4.

If you are already driving with active cruise control, the speed is decreased by approx. 1 mph / 2 km/h every time you briefly tap the button.

Press and hold button 4.

With the cruise control active, the system automatically reduces the throttle opening to slow the vehicle. When you release the button, the system maintains and stores the current speed.

Online Edition for Part-No. 01 41 0 156 890 - © 09/02 BMW AG

To cancel the cruise control

When the system is activated, press button 2.

The indicator lamp stays lit.
You can use the cruise control again as required.

In addition, cruise control is canceled automatically

- ▷ when the brakes are applied
- ▷ when you apply pressure to the clutch pedal, or when you move the CVT selector lever from D to P, N or R
- ▷ or if the cruise speed is either exceeded or not met for an extended length of time, for example if you press the accelerator pedal and exceed the stored speed.

To continue cruise control

Press button 1.

The vehicle accelerates to and maintains the last speed stored. If you turn the ignition key to position 0, the stored speed is deleted and the system is deactivated.

To deactivate the system

Press button 2 repeatedly until the indicator lamp goes out.

The stored speed is cleared.

Online Edition for Part-No. 01 41 0 156 890 - © 09/02 BMW AG

ODOMETER

1 Trip odometer

To set to zero:

With ignition key in position 1, press the button until the trip odometer is at zero.

2 Odometer

You can activate the displays shown in the illustration, with the ignition key in position 0, by pressing the button in the instrument cluster.

TACHOMETER

Do not operate the engine with the needle in the red overspeed zone of the gauge.

To protect the engine, the power is reduced when you approach a certain engine speed in this sector.

FUEL GAUGE

In the speedometer

If the indicator light 1 begins to be lit continuously, there are approx. 2.1 gallons / 8 liters of fuel in the tank.
Fuel tank capacity:
approx. 13.2 gallons / 50 liters.

When you switch on the ignition, the indicator lamp lights up briefly to confirm that the system is operational.

If the angle of the vehicle varies, for example when you are driving in mountainous areas, the needle may fluctuate slightly.

⚠ Refill the gas tank early. If you drive to the last drop of fuel, engine functions are not guaranteed and damage can occur.◀

Online Edition for Part-No. 01 41 0 156 890 - © 09/02 BMW AG

FUEL GAUGE

In the navigation system

Please also comply with the instructions in the previous section.◀

If the indicator light 1 changes from orange to red, there are approx. 2.1 gallons / 8 liters of fuel in the tank.

COOLANT TEMPERATURE GAUGE

Low temperature

The needle is at the bottom or on the right of the range.

The engine is still cold. Drive at moderate engine and vehicle speeds.

Center position

Normal operating temperature of the engine.

High temperature

As soon as there is a deviation from the center position upwards or to the left:

Drive moderately and at low engine speed. If necessary, switch off the engine and allow it to cool down.

Checking coolant level, see page 96.

1 Red indicator lamp

When you switch on the ignition, warning lamp 1 comes on briefly to confirm that the system is operational.

Lights up while driving:
Engine is too hot. Switch off the engine immediately and allow it to cool down.

Navigation system option

Coolant temperature warning lamp in tachometer lights up while driving:
Engine is too hot. Switch off the engine immediately and allow it to cool down.

Online Edition for Part-No. 01 41 0 156 890 - © 09/02 BMW AG

SERVICE INTERVAL DISPLAY

Remaining distance for service

The displays shown in the illustration appear for a few seconds when the ignition key is in position 1 or after the engine is started.

The next service due appears in miles / kilometers with the message "inspection" and/or "oil service", together with the distance remaining before the next scheduled service displayed in miles / km. The computer bases its calculations of the remaining distance on your driving style in the period immediately preceding your data request.

A flashing message and a – in front of the number mean that the service interval has already been exceeded by the distance shown on the display. Please contact your MINI Dealer for an appointment.

For more information on the Service interval display, see page 98.

CLOCK

Settings

From ignition key position 1:

Left button: hours

Right button: minutes.

Move forward in increments:
Press the button

or

fast forward:
Press and hold the button.

Changeover from 24-hour to 12 -hour mode:

Press both buttons at the same time for approx. 5 seconds.

COMPUTER*

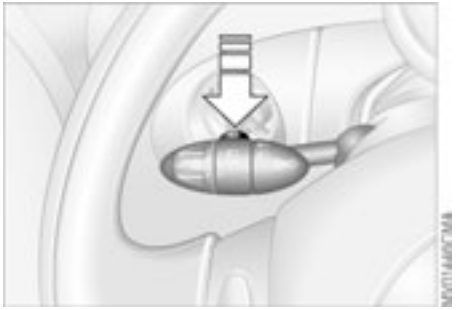

Mode selection

With the ignition key in position 1 and higher, you can use the button in the turn signal indicator lever to retrieve information from the computer for display in the tachometer. By pressing the button briefly, you can call up a new function for display.

The displays appear in the following order: Outside temperature, cruising range, average fuel consumption, average vehicle speed.

Starting with ignition key position 1, the last active setting is displayed.

▷ If the vehicle is equipped with a navigation system, you will find more information on the computer in the navigation system Owner's Manual.◀

Online Edition for Part-No. 01 41 0 156 890 - © 09/02 BMW AG

Outside temperature

If the vehicle is equipped with a tachometer, but not with a computer, the temperature is always displayed.

You can have the units °C or °F set by your MINI Dealer.◀

Range

The computer bases its calculations for the cruising range on the driving style and on the remaining fuel in the tank.

If the range displayed is less than 35 miles / 50 km be sure to refuel, otherwise engine functions are not guaranteed and damage could occur.◀

Average speed – Average fuel consumption

Press the button in the turn signal indicator lever for a longer period.

The displayed average speed value and consumption value are recalculated.

Any time spent when the vehicle is stationary and the engine is shut off is ignored for the calculation.

You can have other units set by your MINI Dealer.◀

Online Edition for Part-No. 01 41 0 156 890 - © 09/02 BMW AG

AUTOMATIC STABILITY CONTROL PLUS TRACTION (ASC+T)*

The concept

This system optimizes vehicle stability and traction, especially when just starting off, when accelerating or when cornering.
ASC+T recognizes the danger present in traction loss and will increase driving stability and traction by reducing the engine's output and, if necessary, by applying the brakes to the front wheels. ASC+T is operational each time you start the engine.

The laws of physics cannot be repealed, even with ASC+T. An appropriate driving style always remains the responsibility of the driver. Avoid using the additional safety margin provided by the system as an excuse for taking unnecessary risks.
Do not make any modifications to the ASC+T system. Allow only authorized technicians to perform service procedures on the ASC+T.◀

Indicator lamp

The indicator lamp on the instrument cluster will go out shortly after the ignition has been switched on, see pages 16, 17.

If the indicator lamp flashes:
ASC+T controls the drive and braking forces.

If the indicator lamp fails to go out after the engine is started, or if it comes on during normal driving and stays on:
The system is defective or was turned off using the button.
The described stabilizing operations are no longer available.
You can, however, drive the vehicle normally without ASC+T.
In the event of a malfunction, please see your MINI Dealer, see pages 16, 17.◀

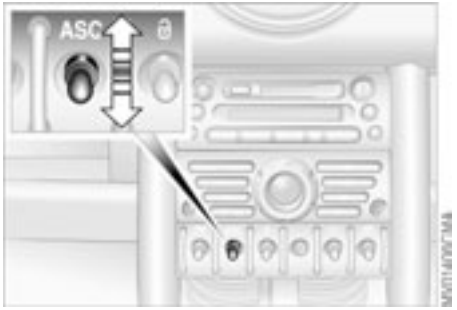

Switch off the ASC+T

Briefly press the switch.
The indicator lamp stays lit.

When driving with snow chains or to "rock free" in snow, it can be helpful to switch off the ASC+T for a brief period.

To maintain vehicle stability, always drive with the ASC+T switched on whenever possible.◀

Switch the ASC+T back on

Briefly press the switch once again.
Indicator lamp goes out.

Online Edition for Part-No. 01 41 0 156 890 - © 09/02 BMW AG

DYNAMIC STABILITY CONTROL (DSC)*

The concept

This system maintains driving stability even in critical driving situations.

The system optimizes vehicle stability during acceleration and when starting from a full stop, as well as optimizing traction. In addition, it recognizes unstable vehicle conditions, such as understeering or oversteering, and, as far as is possible within the laws of physics, helps keep the vehicle on a steady course by reducing the rpms and by brake applications to the individual wheels.

The DSC is operational every time you start the engine. DSC contains the functions Antilock Brake System (ABS), Electronic Brake Force Distribution (EBD), and ASC+T.

The laws of physics cannot be repealed, even with DSC. An appropriate driving style always remains the responsibility of the driver. We therefore urge you to avoid using the additional safety margin of the system as an excuse for taking risks.
Do not make any modifications to the DSC system. Allow only authorized technicians to perform service procedures on the DSC.◀

Indicator lamp

The indicator lamp on the instrument cluster will go out shortly after the ignition has been switched on, see pages 16, 17.

If the indicator lamp flashes:
DSC controls the drive and braking forces.

If the indicator lamp fails to go out after the engine is started, or if it comes on during normal driving and stays on:
The system is defective or was turned off using the button.
The described stabilizing operations are no longer available.
The vehicle will remain completely operational, however, without DSC.
In the event of a malfunction, please see your MINI Dealer, see pages 16, 17.◀

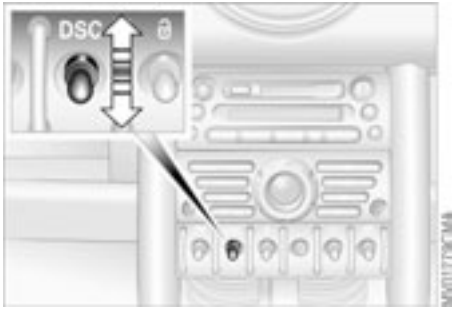

To switch off the DSC

Briefly press the switch.
The indicator lamp stays lit.

When driving with snow chains, it may be effective to switch off the DSC for a brief period.

To maintain stability, always drive with the DSC switched on whenever possible.◀

To switch DSC back on

Briefly press the switch once again.
Indicator lamp goes out.

Online Edition for Part-No. 01 41 0 156 890 - © 09/02 BMW AG

FLAT TIRE MONITOR

The concept

The tire inflation pressure is determined from the signals of the ABS sensors.
The system provides an alert whenever the tire inflation pressure drops below the pressure in any other tire.

Requirement

So that the system can "familiarize" itself with the correct inflation pressure, please do the following:

1. Check the tire inflation pressure in all tires
2. Compare them with the inflation pressure table, see page 86, and adjust the pressures if necessary
3. Initialize the system.

Check the tire inflation pressure regularly and correct it if necessary, see page 85.◀

Flat tire

The indicator lamp in the instrument cluster informs you by flashing when the tire inflation pressure of a tire deviates from the "learned" values. In addition, an acoustic signal is sounded.

▷ Vehicles with Run Flat tires, see notes on pages 85, 88, 116
▷ Vehicles with normal tires, see notes on pages 85, 112.

The Flat Tire Monitor cannot alert you to severe and sudden tire damage caused by external factors. Another factor which the Flat Tire Monitor does not recognize is the balanced and very gradual pressure loss that takes place in all tires over an extended period of time.◀

Malfunctions

As long as there is still a malfunction, the yellow indicator lamp on the instrument cluster will stay lit up.
The indicator lamp also lights up in the event of a system malfunction.

Please contact your MINI Dealer in these cases.

Online Edition for Part-No. 01 41 0 156 890 - © 09/02 BMW AG

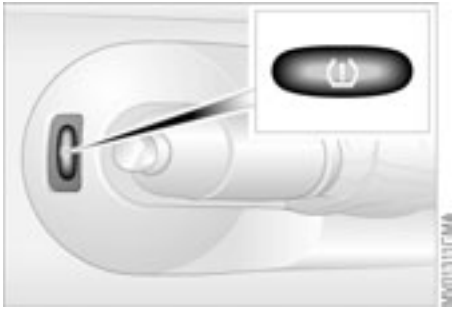

Initializing the system

Only initialize the system if the inflation pressure has been corrected or changed, e.g. after a tire change.

1. Ignition key in position 2
2. Press the button long enough for the yellow indicator lamp in the instrument cluster to light up for a few seconds
3. Start the engine.

After a few minutes driving time, the Flat Tire Monitor sets the current inflation pressure in the tires as the target values to be monitored.

Do not initialize the system when snow chains are fitted. When driving with snow chains, false alarms can occur or pressure losses might not be detected.◀

In the following situations false alarms can also occur under certain circumstances or the detection of inflation pressure loss can be delayed:

▷ When driving on roads covered with snow or on other slippery road surfaces
▷ With a sporty driving style – slip at the driven wheels, high lateral accelerations.◀

Online Edition for Part-No. 01 41 0 156 890 - © 09/02 BMW AG

PARK DISTANCE CONTROL (PDC)*

The concept

The PDC assists you when you back into a parking space. A signal tone tells you the current distance to an object behind your vehicle. To do this, four ultrasonic sensors in the rear bumper measure the distance to the nearest object.
The sensors on each side have a range of approx. 2 ft / 60 cm, the middle sensors one of approx. 5 ft / 1.5 m.

The system starts to operate automatically about one second after you select reverse with the ignition key in position 2.

Wait for this one second before you drive backwards.◀

PDC is deactivated when you shift away from Reverse.

You can have a signal tone set by your MINI Dealer as a confirmation that PDC has been activated.◀

Acoustical signals

The distance to an object is indicated by a tone sounding at intervals. As the distance between vehicle and object decreases, the intervals between the tones become shorter. A continuous tone indicates the presence of an object less than 8 in / 20 cm away.

The warning signal is canceled after approx. three seconds if the distance to the object remains constant during this time, for instance if you are moving parallel to a wall.

System malfunctions will be indicated by a continuous high-pitched tone when the system is activated the first time. Please have your MINI Dealer resolve the problem.

Volume control

The volume of the Park Distance Control signal can be adjusted from level 1 – soft – to level 6 – loud.

The volume can be set by your MINI Dealer.◀

Even with PDC, final responsibility for estimating the distance between the vehicle and any objects always remains with the driver.
Even when sensors are involved, there is a blind spot in which objects cannot be detected. Recognition of some objects can be beyond the limits of physical ultrasonic measurement, for example with towing bars or hitches or with thin or wedge-shaped objects. Moreover, low objects that have already been detected – such as a curb edge – can disappear out of the range of the sensors before a continuous tone sounds.
Loud sources of sound outside and inside your vehicle can drown the PDC signal tone.◀

Keep the sensors clean and free of ice or snow in order to ensure that they will continue to operate effectively.
Do not apply high pressure spray to the sensors for a prolonged period of time.
Always maintain a distance which is greater than 4 in / 10 cm.◀

Online Edition for Part-No. 01 41 0 156 890 - © 09/02 BMW AG

AIR CONDITIONING SYSTEM*

1 Air onto the windshield and onto the side windows
2 Air for the upper body area 69
3 Air for the front and rear footwells
4 Temperature 68
5 Windshield heating 68
6 Blower for air supply 68
7 Air conditioner 68
8 Air distribution 68
9 Recirculated air mode 68
10 Rear window defroster 68

Online Edition for Part-No. 01 41 0 156 890 - © 09/02 BMW AG

Air supply

You can select blower speeds from 1 to 4. Position 0: fan is turned off. The button for recirculated air mode fully blocks the supply of air from outside.

Heating and ventilation operate as of position 1.

Temperature

Turn to the right – red – to increase the temperature of the passenger compartment.

Rapid heating: turn to the extreme right. Then select a pleasant interior temperature.

Air distribution

Air distribution in upper body region , upper body region and footwell , footwell , footwell and windows , and windows .
All intermediate positions are possible, see illustration and overview on page 67.

Rear window defroster

Rear window defroster switched on:
Indicator lamp lights up.
As long as the indicator lamp is lit, the heating operates at high power output – rapid defrosting.

Indicator lamp goes out.
The heating continues to run with reduced power output and then switches itself off automatically.

Windshield heating*

Windshield heating switched on:
Indicator lamp lights up.
As long as the indicator lamp is lit, the heating operates at high power output – rapid defrosting.

Indicator lamp goes out.
The heating continues to run with reduced power output and then switches itself off automatically.

Air conditioning

Air conditioner switched on:
Indicator lamp lights up.
The air is cooled and dehumidified and – depending on the temperature setting – rewarmed.
After the engine start, the windshield may fog over briefly.

When the air conditioner is operating, condensation is formed which then exits under the vehicle. Traces of condensed water on the ground are therefore normal.◀

Recirculated air mode

Supply of outside air into the vehicle is blocked:
Indicator lamp lights up.
The air within the vehicle is recirculated.

Do not run the recirculated air mode for longer than approx. 30 minutes, as otherwise the air quality in the interior will deteriorate.◀

If the windows fog up in the recirculated air mode, turn the recirculated air mode off and if necessary increase the air supply.◀

Online Edition for Part-No. 01 41 0 156 890 - © 09/02 BMW AG

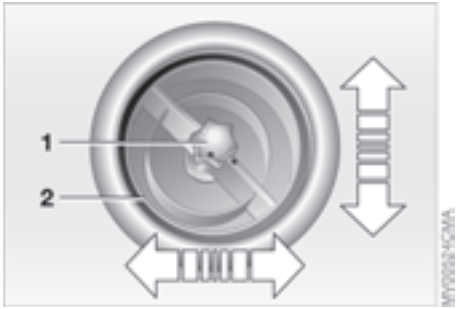

Draft-free ventilation

Air supply for the upper body area:

Button 1: air outlets can be opened and closed by turning.
The points indicate the position in each case.

Nozzle 2: air vent direction is controlled by turning.

Particle filter

The particle filter removes dust and pollen from the incoming air.

Your MINI Dealer will replace it during routine maintenance. A substantial reduction in the air supply indicates that the filter must be replaced before scheduled maintenance.

Defrosting and demisting windows

1. Set the rotary blower speed control for the airflow rate to position 4
2. Turn the rotary temperature control completely to the right – red
3. Rotary control for air distribution in position
4. To defrost the rear window: switch on the rear window defroster and, if required, the windshield heating.

Online Edition for Part-No. 01 41 0 156 890 - © 09/02 BMW AG

AUTOMATIC CLIMATE CONTROL*

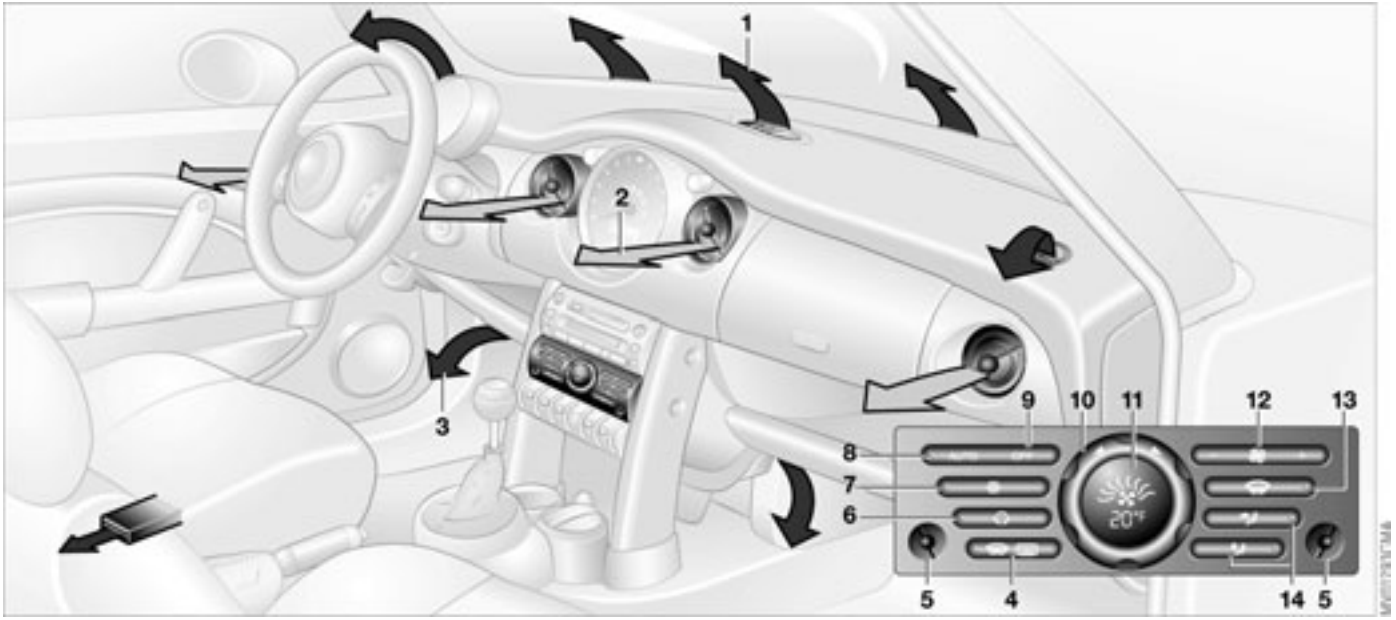

1 Air onto the windshield and onto the side windows

2 Air for the upper body area 72

3 Air for the front and rear footwells

4 Rear window defroster and windshield heating 71

5 Interior temperature sensor – please keep clear and unobstructed

6 Recirculated air mode 71

7 Air conditioner 68

8 Automatic air distribution and supply 71

9 Switching the automatic climate control on/off 71

10 Temperature 71

11 Display for temperature and air supply 71

12 Blower for air supply 71

13 Defrosting and demisting the windshield and side windows 69

14 Individual air distribution 72

Online Edition for Part-No. 01 41 0 156 890 - © 09/02 BMW AG

Automatic air distribution and supply

Automatic program (AUTO): Indicator lamp lights up.
Automatic adjustment of the air distribution and supply, and adaptation of the specified temperatures to external influences, i.e. outside temperature and sunlight.

In the automatic program (AUTO), the air conditioner is activated automatically.

Switching the automatic climate control on/off

The blower, heating and air conditioner are switched off.

To switch the automatic climate control on again: Press any button of the automatic climate control.

Air conditioning

Air conditioner switched on: Indicator lamp lights up.
The air is cooled and dehumidified and – depending on the temperature setting – rewarmed.

In the automatic program (AUTO), the air conditioner is activated automatically.

After the engine start, the windshield may fog over briefly. Switching on the air conditioner reduces condensation on the windows.

Condensation forms in the air conditioner system during operation, and then exits under the vehicle. Traces of condensed water on the ground are therefore normal.◀

Recirculated air mode

Supply of outside air into the vehicle is blocked: Indicator lamp lights up.
The air within the vehicle is recirculated.

In the automatic program (AUTO) in hot weather conditions, the recirculated air mode is activated temporarily to enable faster cooling.

Do not run the recirculated air mode for longer than approx. 30 minutes, as otherwise the air quality in the interior will deteriorate.◀

If the windows fog up in the recirculated air mode, turn the recirculated air mode off and if necessary increase the air supply.◀

Rear window defroster and windshield heating*

Rear window defroster and windshield heating switched on:
Indicator lamp lights up.
As long as the indicator lamp is lit, the heating operates at high power output – rapid defrosting.

Indicator lamp goes out.
The heating continues to run with reduced power output and then switches itself off automatically.

Temperature

Setting the temperature: Move or turn the wheel in the appropriate direction to increase the temperature step by step.

The figures in the display provide a general indication of interior temperature. When you start the vehicle, the system ensures that the selected temperature is achieved as quickly as possible and then maintained.

Permanent heating with maximum power output at temperature selection HI. Permanent cooling at LO.◀

Air supply

Press the left or right half of the button: the air supply varies.

Online Edition for Part-No. 01 41 0 156 890 - © 09/02 BMW AG

Defrosting and demisting windows

Press the button briefly.
The indicator lamp flashes.

Ice and condensation are removed from the rear window/windshield and side windows.

The rear window defroster/windshield heating is switched on automatically. It can be switched off again separately.

Press the button for a longer period.
Only air to the windshield.

Individual air distribution

Combine the air distribution yourself. This switches off the automatic program.

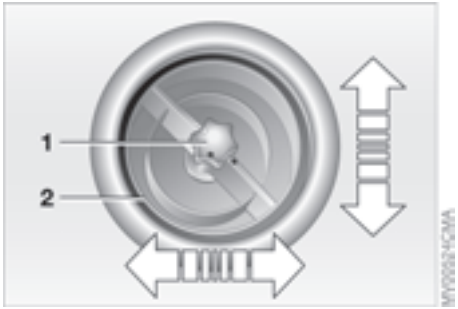

Draft-free ventilation

Air supply for the upper body area:

Button 1: air outlets can be opened and closed by turning.
The points indicate the position in each case.

Vent 2: change the direction of the airflow by swiveling.

Particle filter/activated-charcoal filter

The particle filter removes dust and pollen from the incoming air. The activated-charcoal filter provides additional protection by filtering gaseous pollutants from the outside air.

Your MINI Dealer replaces this combined filter as a standard part of your scheduled maintenance. A substantial reduction in the air supply indicates that the filter must be replaced before scheduled maintenance.

Online Edition for Part-No. 01 41 0 156 890 - © 09/02 BMW AG

GLOVE COMPARTMENT

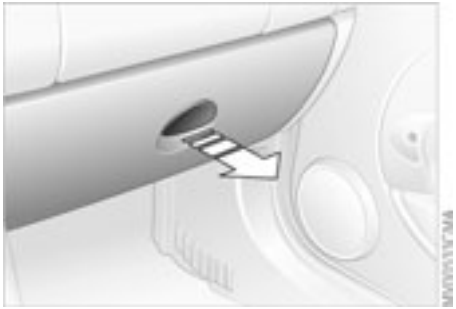

To open:

Pull the handle.
The light goes on.

To close:

Fold the door up.

To prevent injury in the event of an accident, close the glove compartment immediately after use.◀

ASHTRAY/BEVERAGE HOLDER

Ashtray

The ashtray is located in one of the beverage holders in the center console.

In the rear, an ashtray can also be fitted in the beverage holder at the end of the center console.

Beverage holders

There are two beverage holders at the front of the center console. Another is located at the end of the center console.

LIGHTER/12 V POWER SUPPLY

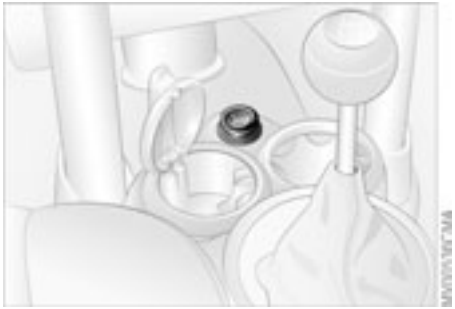

From ignition key position 1:

Press the cigarette lighter in.
Remove as soon as the lighter jumps back out.

Hold or touch the hot cigarette lighter by the knob only. Holding or touching it in other areas could result in burns.◀

Cigarette lighter socket/12 V power supply

Suitable for attaching power supplies for flashlights, car vacuum cleaners, etc., up to a rating of approx. 200 Watts at 12 Volts. Avoid damaging the socket with plugs of different shapes or sizes.

The 12 V power supply is also used for supplying the compressor of the MINI Mobility System.

Online Edition for Part-No. 01 41 0 156 890 - © 09/02 BMW AG

CARGO AREA COVER

When the tailgate is opened, the cargo area cover is also raised.

Never place any heavy or hard objects on the cargo area cover, otherwise occupants could be injured during braking maneuvers.◀

Removal

To load bulky luggage, the compartment cover can be removed.

1. Remove the retaining straps on the tailgate.
2. Pull the cargo area cover out towards the rear.

FOLDABLE REAR BACKREST

To unlock and fold

1. Pull lever
2. Fold the rear backrest forwards.

When folding the backrest back into its original position always ensure that the catch engages securely. A loose backrest might fail to prevent cargo from entering the passenger compartment during sudden braking or evasive maneuvers, posing a potential hazard to occupants.◀

Online Edition for Part-No. 01 41 0 156 890 - © 09/02 BMW AG

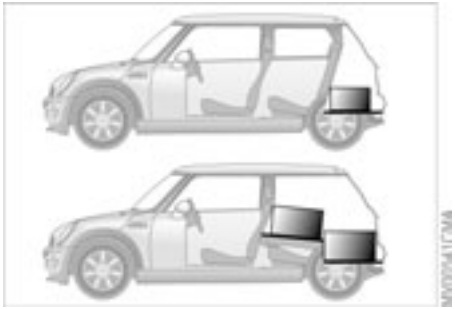

Stowing cargo

▷ Place heavy cargo as far forward as possible – directly behind the backrests – and as low as possible.
▷ Cover sharp edges and corners
▷ Do not pile objects higher than the top edge of the backrest

▷ For very heavy cargo when the rear seat is unoccupied, fasten each safety belt in the opposite buckle. This provides additional stabilization for the rear backrests.

Securing the load

▷ Secure smaller and lighter items using the cargo area net* or elastic straps
▷ For large, heavy items, see your MINI Dealer for load-securing devices*. Lashing eyes are provided at the inner corners of the cargo area for attaching these load-securing devices
▷ Comply with the information enclosed with the load-securing devices.

Online Edition for Part-No. 01 41 0 156 890 - © 09/02 BMW AG

LOADING CARGO

Always position and secure the load carefully. If you do not, it can endanger the passengers during braking or evasive maneuvers.
Do not exceed the permissible gross weight and axle load, see page 132, otherwise the vehicle's operating safety is no longer assured and you are in violation of the law.
Do not stow heavy or hard objects in the passenger compartment without first securing them. Otherwise they would be thrown around during braking and evasive maneuvers and endanger the occupants.◀

ROOF-MOUNTED LUGGAGE RACK*

When loading a roof-mounted luggage rack, ensure that there is sufficient space for the movement of the sliding/tilt sunroof and that no objects protrude into the swiveling area of the tailgate, as otherwise damage can occur.◀

Do not secure the roof-mounted luggage rack to the trim panels/strips: the lack of a secure hold could lead to damage or accidents.◀

Special roof-mounted luggage racks for your MINI are available as accessories from your MINI Dealer.◀

Online Edition for Part-No. 01 41 0 156 890 - © 09/02 BMW AG

Online Edition for Part-No. 01 41 0 156 890 - © 09/02 BMW AG

Online Edition for Part-No. 01 41 0 156 890 - © 09/02 BMW AG

OVERVIEW

CONTROLS

OPERATION, CARE, MAINTENANCE

OWNER SERVICE PROCEDURES

TECHNICAL DATA

INDEX

Online Edition for Part-No. 01 41 0 156 890 - © 09/02 BMW AG

BREAK-IN PROCEDURES

To ensure that your vehicle provides maximum economy throughout a long service life, we request that you comply with the following information:

Engine

Up to 1,250 miles / 2,000 km:
Constantly vary both vehicle and engine speed during these initial miles while remembering not to exceed 4,500 rpm / 4500/min and/or vehicle speeds of over 95 mph / 150 km/h.

Absolutely avoid using the full-throttle or kickdown position for the accelerator.

After 1,250 miles / 2,000 km, the rpm and vehicle speed can be increased gradually.

You should also comply with these break-in procedures if the engine has to be replaced at a later point.

Tires

Due to technical factors associated with their manufacture, tires do not achieve their full traction potential until after an initial break-in period. Therefore drive carefully during the first 200 miles / 300 km.

Brake system

Approx. 300 miles / 500 km must be driven before the brake pads and rotors achieve the optimum pad-surface and wear patterns required for trouble-free operation and an extended service life.

Clutch

Roughly 300 miles / 500 km must be driven before the clutch starts to operate at optimum efficiency. Remember to engage the clutch carefully during this initial period.

Online Edition for Part-No. 01 41 0 156 890 - © 09/02 BMW AG

Parking the vehicle

Condensation forms in the air conditioner system during operation, and then exits under the vehicle. Traces of condensed water on the ground are therefore normal.

Brakes

Do not rest your foot on the brake pedal while driving. Even light but consistent pedal pressure can lead to high temperatures, brake wear and possibly even brake failure.◀

Hydroplaning

When driving on wet or slushy roads, reduce road speed. If you do not, a wedge of water can form between tires and road surface. This phenomenon is characterized by a partial or complete loss of contact between the tires and the road surface. The ultimate results are loss of steering and braking control.◀

Driving through water

Do not drive through water on the road if it is deeper than 1 ft / 30 cm, and then only at walking speed at the most. Otherwise, the vehicle's engine, the electrical systems and the transmission may be damaged.◀

Clothes hooks

When suspending clothing from the hooks, ensure that they will not obstruct the driver's vision. Do not hang heavy objects on the hooks. If you do so, they could cause personal injury during braking or evasive maneuvers.◀

High temperatures

High temperatures occur in any vehicle equipped with a catalytic converter. Do not remove the heat protection plates fitted in the area of the exhaust system and do not apply body-cavity protectant to this area. When driving, standing at idle or parking the vehicle, take care to avoid contact between the hot exhaust system and flammable materials – e.g. hay, leaves, grass, etc. Such contact could lead to a fire resulting in serious personal injury and property damage.◀

Online Edition for Part-No. 01 41 0 156 890 - © 09/02 BMW AG

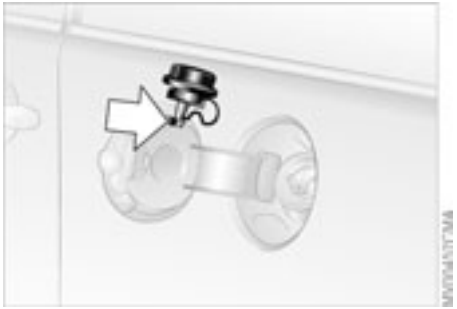

Always switch off the engine before refueling. If you do not, fuel cannot be filled into the tank and the "Service Engine Soon" lamp may come on.◀

1. Open the fuel filler door
2. Turn the filler cap counterclockwise
3. Put the filler cap in the bracket attached to the fuel filler door.

Always observe all applicable precautions and regulations when handling fuels. Never carry spare fuel containers in your vehicle. Whether empty or full, these containers can leak, cause an explosion, and lead to fire in the event of a collision.◀

Simple and environmentally friendly

Always observe all safety precautions posted at the service station when handling fuel.◀

When refueling, insert the filler nozzle completely into the filler pipe. Pulling the nozzle out of the pipe during refueling

▷ results in premature pump shutoff
▷ will reduce the effect of the fuel vapor recovery system on the pump.

As long as the filler nozzle is used properly, the fuel tank is full whenever the nozzle shuts off the first time.

Close tank:

1. Put on filler cap
2. Turn filler cap clockwise until it clicks
3. Close fuel filler door.

Fuel tank capacity:
approx. 13.2 gallons / 50 liters, of which approx. 2.1 gallons / 8 liters are reserve capacity.

Close the filler cap carefully after refueling until a click is heard.
While closing, be sure not to squeeze the strap which is fastened to the filler cap.
US models only:
A loose or missing cap will activate the message CHECK FILLER CAP in the Check Control* or the Check Filler Cap lamp*.◀

Do not drive until the fuel tank is totally empty, otherwise engine operations are not guaranteed and damage could occur.◀

Online Edition for Part-No. 01 41 0 156 890 - © 09/02 BMW AG

FUEL SPECIFICATIONS

The engine uses lead-free gasoline only.

Required fuel:

▷ Premium Unleaded Gasoline,

min. 91 AKI.
AKI = Anti Knock Index.

Do not use leaded fuels. The use of leaded fuels will cause permanent damage to the emissions-control system's oxygen sensor and the catalytic converter.◀

ANTILOCK BRAKE SYSTEM (ABS)

The concept

The ABS keeps the wheels from locking while braking, thereby enhancing active driving safety.

ABS also includes Electronic Brake Force Distribution (EBD).

Braking with ABS

To achieve optimal performance from ABS when reacting to critical situations, you should apply maximum pressure to the brake pedal – panic stop.

Since the vehicle remains maneuverable, you can still go around any obstacles with the smallest possible steering movements.

Pulsation of the brake pedal in conjunction with the sound of hydraulic regulation indicates to you that you are driving at the limit and reminds you to readapt your vehicle's speed to road surface conditions.

Electronic Brake Force Distribution (EBD)

The system regulates the brake force distribution between the front and rear axles. In order to avoid an over-braking of the rear wheels in certain situations, the EBD permanently monitors the slip values and regulates the slip on the rear axle depending on that of the front axle.

Online Edition for Part-No. 01 41 0 156 890 - © 09/02 BMW AG

Brake fluid level

If the brake fluid level is too low and brake pedal travel has become longer, there may be a defect in one of the brake system's hydraulic circuits.

Proceed to the nearest MINI Dealer. Higher brake application pressure may be necessary under these conditions, there may be a slight pull to one side, and brake pedal travel may be longer. Please remember to adapt your driving style accordingly.◀

Disc brakes

When the vehicle is driven only occasionally, during extended periods when the vehicle is not used at all, and in operating conditions where brake applications are less frequent, there is an increased tendency for corrosion of the brake rotors and accumulation of contamination on the brake pads. This occurs because the minimal pressure that must be exerted by the pads to clean the rotors by brake applications is not reached.

Corrosion on brake rotors is signaled by a running or pulsation during braking; even extended subsequent braking will not cure this phenomenon.

It is a good idea to periodically dry the brakes with a gentle application when driving in rain and on wet roads. Monitor traffic conditions to ensure that this maneuver does not endanger other road users. The resulting heat dries the brake rotor and the brake pads. Then if braking effect is needed, it is immediately available.

Extended or steep mountain descents should be driven in the gear or in the driving position in which only minimal periodic brake application is required. This helps avoid placing excessive loads on the brake system. Stay within the allowable speed range, refer to page 58.

Do not coast with the clutch pressed or with the transmission or selector lever in Neutral. Do not coast with the engine switched off. The engine provides no braking effect when the transmission is in Neutral, and there is no power-assist for braking when the engine is switched off.◀

Brake pads

For your own safety: use brake pads which the manufacturer of your MINI has approved for your particular vehicle model. The manufacturer of your MINI cannot evaluate non-approved brake pads to determine if they are suitable for use, and therefore cannot ensure the operating safety of the vehicle in the event of their use.◀

Online Edition for Part-No. 01 41 0 156 890 - © 09/02 BMW AG

TIRE INFLATION PRESSURE

Information for your safety

The factory-approved radial tires are matched to the vehicle and have been selected to provide optimum safety and driving comfort if used properly.

It is not merely the tire's service life, but also driving comfort and – above all else – driving safety that depend on the condition of the tires and the maintenance of the specified tire pressure.

Incorrect inflation pressure is a frequent cause of tire damage. It also significantly influences the roadholding ability of your MINI.

Check tire inflation pressures regularly – at least every two weeks and before beginning a longer trip. Failure to observe these precautions can result in incorrect tire pressures, which cause unstable handling response as well as tire damage, and can ultimately lead to an accident. Also check the inflation pressure on the space-saver spare tire.◀

Comply with tire approval specifications

Tire pressures given are valid for tire sizes and makes recommended by the manufacturer of your MINI, which can be asked for from your MINI Dealer.

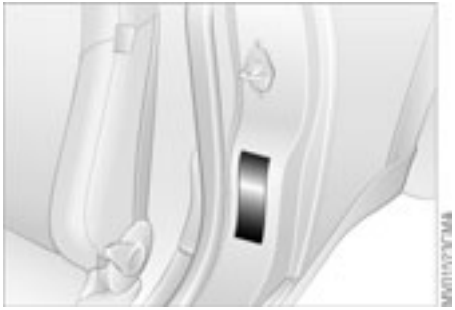

Inflation pressures are on a sticker attached to the B-pillar and visible with the driver's door open.

Checking tire inflation pressures

All pressures are specified in the standard units of pressure for your country – psi/kilopascal – and apply to cold tires, i.e. tires at ambient temperature.

After correcting the tire inflation pressure, reinitialize the Flat Tire Monitor, see page 64.

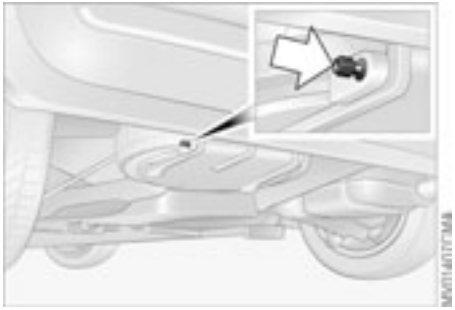

Checking the inflation pressure on the space-saver spare tire

Behind the bumper there is a valve extension accessible from the outside for checking the inflation pressure.

Run Flat tires

Run Flat tires, available as an optional extra, consist of self-contained tires and special rims. The tire reinforcement ensures that the tire retains residual safety in the event of pressure drop, and driving remains possible to a restricted degree. The vehicle is equipped with a Flat Tire Monitor which indicates a flat tire.

More information, see pages 64, 116.

Online Edition for Part-No. 01 41 0 156 890 - © 09/02 BMW AG

TIRE INFLATION PRESSURE

Model	Tires Pressures specified in psi/kilopascal	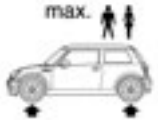				
MINI COOPER	175/65 R 15	30/210	30/210		35/240	35/240
	195/55 R 16 205/45 R 17	30/210	30/210		35/240	35/240
	All winter tires	33/230	33/230		38/260	38/260
	Space-saver spare tire	61/420	61/420		61/420	61/420
MINI COOPER S	195/55 R 16	30/210	30/210		35/240	35/240
	205/45 R 17 195/55 R 16 M+S 205/45 R 17 M+S	33/230	33/230		38/260	38/260
	175/60 R 16 M+S	36/250	36/250		41/280	41/280

All-season tires – M+S – should be inflated to the same pressures as summer tires. Figures as stated here apply to the manufacturer's approved or recommended tires; your MINI Dealer will be happy to provide information on request.

Online Edition for Part-No. 01 41 0 156 890 - © 09/02 BMW AG

TIRE CONDITION

Tire tread/tire damage

Inspect your tires frequently for tread wear, signs of damage and for foreign objects lodged in the tread. Check the tread depth.

The tread depth should not fall below $^{1}/_{8}$ in / 3 mm.
Below $^{1}/_{8}$ in / 3 mm tread pattern depth, there is an increased risk of hydroplaning, even at relatively moderate speeds and with only small amounts of water on the road.

Wear indicators in the tread-groove base, see arrow, are spread around the circumference of the tire and are marked on the side wall of the tire with TWI – Tread Wear Indicator. The indicators in the tread indicate at $^{1}/_{16}$ in / 1.6 mm tread depth that the legally permitted wear limit has been reached.

Never continue to drive with a flat, pressureless tire, except with Run Flat tires. A pressureless, flat tire greatly impairs steering and braking response, and can lead to complete loss of control over the vehicle. Avoid overloading the vehicle so that the permitted load on the tires is not exceeded. Overloading can lead to overheating and increases the rate at which damage develops inside the tires. The ultimate result can assume the form of a sudden air loss.
Unusual vibrations while driving, caused for example by driving over a curb or similar, can indicate wheel or tire damage or other damage to the vehicle. This is also true for irregularities in the vehicle's handling characteristics, such as a pronounced tendency to pull to the left or right. Should this occur, respond by immediately reducing your speed. Proceed carefully to the nearest MINI Dealer or professional tire center, or have the vehicle towed there to have its wheels and/or tires inspected or controlled. Tire damage – up to and including blowouts – can endanger the lives of both the vehicle occupants and other road users.◀

TIRE REPLACEMENT

To maintain good handling and vehicle response, use only tires of a single tread configuration from a single manufacturer. The manufacturer of your MINI tests and approves wheel and tire combinations.

Do not use retreaded tires, since driving safety may be impaired. This is due to the possible variations in casing structures and, in some cases, to their extreme age, which can lead to a decrease in their durability.◀

DOT quality grades

Tread wear

Traction AA A B C

Temperature A B C

All passenger car tires must conform to Federal Safety Requirements in addition to these grades.◀

Online Edition for Part-No. 01 41 0 156 890 - © 09/02 BMW AG

Tread wear

The tread wear grade is a comparative rating based on the wear rate of the tire when tested under controlled conditions on a specified government test course.

For example, a tire graded 150 would wear one and one-half – 1 ½ – times as well on the government course as a tire graded 100. The relative performance of tires depends upon the actual conditions of their use, however, and may depart significantly from the norm due to variations in driving habits, service practices and differences in road characteristics and climate.

Traction

The traction grades, from highest to lowest, are AA, A, B, and C.

Those grades represent the tire's ability to stop on wet pavement as measured under controlled conditions on specified government test surfaces of asphalt and concrete. A tire marked C may have poor traction performance.

The traction grade assigned to this tire is based on straight-ahead braking traction tests, and does not include acceleration, cornering, hydroplaning, or peak traction characteristics.◀

Temperature

The temperature grades are A – the highest – B and C, representing the tire's resistance to the generation of heat and its ability to dissipate heat when tested under controlled conditions on a specified indoor laboratory test wheel.

Sustained high temperature can cause the material of the tire to degenerate and reduce tire life, and excessive temperature can lead to a sudden flat tire. The grade C corresponds to a level of performance which all passenger car tires must meet under the Federal Motor Vehicle Safety Standard No. 109. Grades B and A represent higher levels of performance on the laboratory test wheel than the minimum required by law.

The temperature grade for this tire is established for a tire that is properly inflated and not overloaded. Excessive speed, underinflation, or excessive loading, either separately or in combination, can cause heat buildup and possible tire failure.◀

Uniform Tire Quality Grading

Quality grades can be found where applicable on the tire sidewall between tread shoulder and maximum section width.
For example:

Treadwear 200

Traction AA

Temperature A

Tire age

The date on which the tire was manufactured is indicated by the code on the sidewall:

DOT ... 1202 indicates that the tire was manufactured in Week 12 of the year 2002.

The manufacturer of your MINI recommends replacing all tires – including the space-saver tire, regardless of actual wear – after 6 years at the latest.

Run Flat tires

For replacement, use only Run Flat tires, as in the event of a flat tire there is no space-saver spare tire.
You will recognize Run Flat tires by a circular symbol containing the letters RSC on the side of the tire, see pages 85, 116.◀

Online Edition for Part-No. 01 41 0 156 890 - © 09/02 BMW AG

WHEEL AND TIRE COMBINATIONS

The right choice

The factory-approved normal and Run Flat tires are matched to your vehicle and have been selected to provide optimum safety and driving comfort if used properly.

The manufacturer of your MINI recommends never mounting wheels and tires that have not been specifically approved by the manufacturer for use on your particular model. Although other wheels and tires may theoretically have the same dimensions, variations in factors such as manufacturing tolerances can result in contact between tire and bodywork, ultimately leading to serious accidents. The manufacturer of your MINI cannot evaluate non-approved wheels and tires to determine if they are suited for use, and therefore cannot ensure the operating safety of the vehicle if they are fitted.◀

The manufacturer of your MINI has tested certain tire brands in each size, categorized them as safe for use on the road, and approved them. Contact your MINI Dealer for more details.

The correct wheel and tire combination affects various systems that would otherwise be impaired, e.g. ABS, ASC+T and DSC. For this reason, use only tires of the same manufacture and tread configuration. In the event of a flat tire, for example, remount the approved wheel and tire combination as soon as possible.◀

Storage

Store tires in a cool, dry place, protecting them against light whenever possible. Protect the tires against contact with oil, grease and fuel.

WINTER TIRES

Choosing the right tire

The manufacturer of your MINI recommends winter tires – M+S radial tires – for driving in adverse winter road conditions. While so-called all-season tires with M+S designation provide better winter traction than summer tires with the load ratings S, T, H, V, W, they do not achieve the performance of winter tires.

In the interest of safe tracking and steering response, install winter tires made by the same manufacturer having the same tread configuration on all four wheels.

Before purchasing winter tires, check whether your MINI is fitted with Run Flat tires. You will recognize Run Flat tires by a circular symbol containing the letters RSC on the side of the tire, see page 116. In this case, use only Run Flat tires, as in the event of a flat tire there is no space-saver spare tire.

Any MINI Dealer will be glad to advise you on the selection of the right winter tires for the relevant operating conditions.

Online Edition for Part-No. 01 41 0 156 890 - © 09/02 BMW AG

WINTER TIRES

Observing speeds

Never exceed the maximum speed for which the tires are rated.
Unprofessional attempts by laymen to service tires can lead to damage and accidents. Have this work performed by skilled professionals only. Your MINI Dealer will be glad to assist you with both their expertise and the proper equipment for your vehicle.◀

Tire condition, tire inflation pressure

Below a tread depth of $^{3}/_{16}$ in / 4 mm, winter tires display a perceptible decrease in their ability to cope with winter driving conditions, and should be replaced in the interest of safety.◀

Comply with the specified tire inflation pressures and be sure to have the wheel and tire assemblies balanced every time you change the tires.

SNOW CHAINS*

Only certain types of snow chains have been tested by the manufacturer of your MINI, classified as road-safe and approved. Contact your MINI Dealer for more details. The manufacturer of your MINI recommends that you use these fine-link snow chains only. Their use is only permitted in pairs on the front wheels on winter tires of the following type:
175/65 R 15.
When fitting, comply with the manufacturer's instructions. With chains, do not exceed a speed of 30 mph / 50 km/h.

After fitting the snow chains, do not activate the Flat Tire Monitor.
When driving with snow chains, it can be helpful to switch off the ASC+T or DSC for a brief period, see pages 62, 63.◀

Online Edition for Part-No. 01 41 0 156 890 - © 09/02 BMW AG

BONNET

Do not attempt to service your vehicle if you do not have the required technical background. Before working in the engine compartment, switch off the engine and allow it to cool down. Before working on the electrical system, always disconnect the battery first. For all work on the vehicle, comply with the appropriate information and instructions. Failure to work in an informed, professional manner when servicing components and materials constitutes a safety hazard for vehicle occupants and other road users. If you are not familiar with the guidelines, please have the operations performed by your MINI Dealer.◀

To unlock

Pull the lever in the right door area beneath the instrument panel.

To open

1. Reach under the bonnet
2. Pull the release lever
3. Open the bonnet.

To close

Allow the bonnet to fall from a height of approx. 1 ft / 30 cm.

To avoid injuries, be sure that the travel path of the bonnet is clear when it is closed, as with all closing procedures.
If it is determined that the bonnet is not completely closed while driving, stop immediately and close it securely, see also page 16.◀

Online Edition for Part-No. 01 41 0 156 890 - © 09/02 BMW AG

ENGINE COMPARTMENT – MINI COOPER

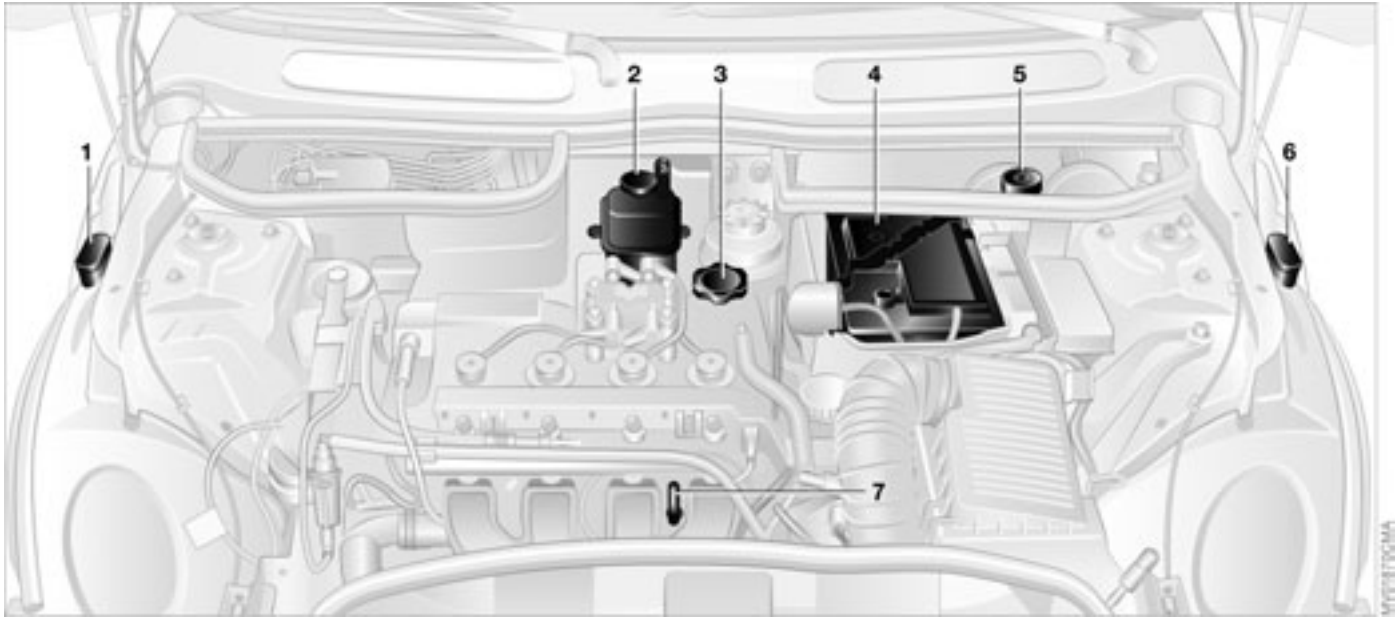

1 Reservoir for windshield washer system 94
2 Coolant expansion tank 96
3 Engine oil filler neck 95
4 Battery 122
5 Brake fluid reservoir 97
6 Reservoir for headlamp cleaning system 94
7 Engine oil dipstick 94

Online Edition for Part-No. 01 41 0 156 890 - © 09/02 BMW AG

ENGINE COMPARTMENT – MINI COOPER S

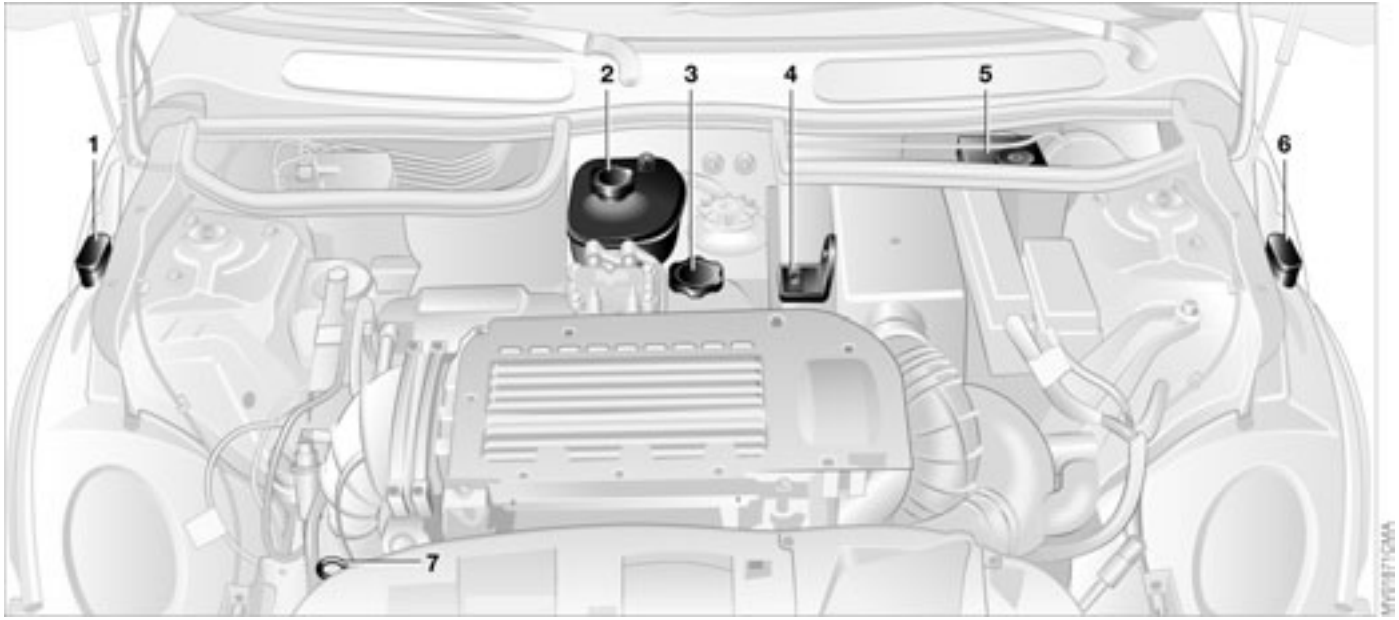

1 Reservoir for windshield washer system 94

2 Coolant expansion tank 96

3 Engine oil filler neck 95

4 Auxiliary terminal for jump-starting 124

5 Brake fluid reservoir 97

6 Reservoir for headlamp cleaning system 94

7 Engine oil dipstick 94

Online Edition for Part-No. 01 41 0 156 890 - © 09/02 BMW AG

WASHER FLUID

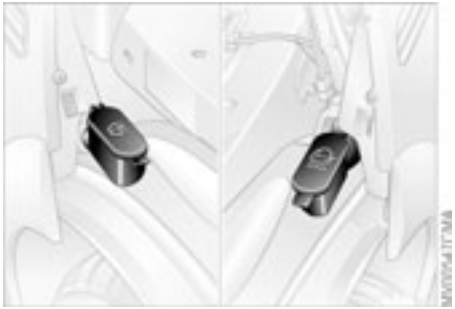

Antifreeze agent for the washer systems is flammable. Always keep it well away from sparks and open flames, and store it in tightly closed containers well out of the reach of children. Always observe the instructions for use provided on the container.◀

Headlamp* and windshield washer systems

The capacity of the headlamp washer system is approx. 2.6 quarts / 2.5 liters, that of the windshield washer system approx. 2.1 quarts / 2.0 liters.

Fill with water and – if required – with antifreeze, according to manufacturer's recommendations.

We recommend that you mix the washer fluid before adding it to the reservoir.◀

ENGINE OIL

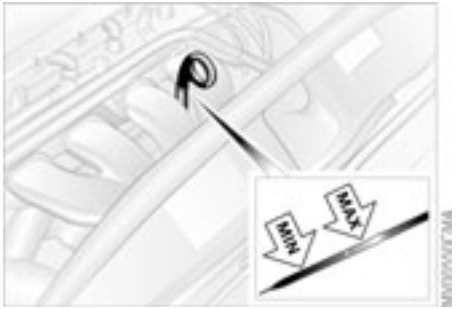

The illustration shows as an example the dipstick of the MINI COOPER.

Measuring the oil level

1. Park the vehicle on a level surface
2. Switch the engine off after it has reached normal operating temperature
3. Pull the dipstick out after approx. 5 minutes and wipe it off with a lint-free cloth, paper towel, or similar material
4. Carefully push the dipstick all the way into the guide tube and pull it out again.

   The oil level must be between the two marks on the dipstick.

As with fuel economy, oil consumption is directly influenced by your driving style and vehicle operating conditions.

Online Edition for Part-No. 01 41 0 156 890 - © 09/02 BMW AG

The oil volume between the two notches – MIN, MAX – on the dipstick corresponds to approx. 1.1 quarts / 1 liter. Do not fill beyond the upper notch on the dipstick. Excess oil will damage the engine.

Adding engine oil

Only top up oil when the oil level has dropped to just above the lower notch of the dipstick. However, never allow the level to drop below the lower notch.◀

MINI engines are designed to operate without oil additives; the use of additives could lead to damage in some cases. That is also valid for the Continuously Variable automatic Transmission (CVT), the gear box and the power assisted steering.◀

The manufacturer of your MINI recommends that you have the oil changed at your MINI Dealer.

Continuous exposure to used oil has caused cancer in laboratory testing. For this reason, any skin areas that come into contact with oil should be thoroughly washed with soap and water.
Always store oil, grease, etc., out of reach of children. Comply with all warning labels and information on lubricant containers.◀

Comply with the applicable environmental laws regulating the disposal of used oil.◀

Specified engine oils

The quality of the engine oil selected has critical significance for the operation and service life of an engine. Based on extensive testing, the manufacturer of your MINI approves only certain grades of engine oil.

Use only approved MINI High Performance Synthetic Oil.

If you are unable to obtain MINI High Performance Synthetic Oil, you can add small amounts of synthetic oil in between oil changes. Only use oils with the API SH specification or higher.

Online Edition for Part-No. 01 41 0 156 890 - © 09/02 BMW AG

ENGINE OIL

Ask your authorized MINI Dealer for details concerning the specific MINI High Performance Synthetic Oil or synthetic oils which have been approved.◀

Viscosities

Viscosity is the oilflow rating as established in SAE classes.

The choice of the proper SAE class depends on the climatic conditions in the area where your MINI is used.

Approved oils are in SAE classes 5W-40 and 5W-30.◀

These oils can be used at all ambient temperatures.

COOLANT

Do not add coolant to the cooling system when the engine is hot. Escaping coolant can cause burns.
Antifreeze and anti-corrosion agents are hazardous to health. Always store these agents in tightly-closed original containers kept well away from the reach of children. Antifreeze and anti-corrosion agents are flammable. Therefore, do not spill them over hot engine parts; otherwise they may ignite and cause burns. Always observe the instructions for use provided on the containers.◀

Comply with the applicable environmental laws regulating the disposal of antifreeze and anti-corrosion agents.◀

The illustration shows as an example the coolant tank on the MINI COOPER.

Checking coolant level

Correct coolant level with cold engine – approx. 68 °F / 20 °C:

Up to the MAX mark of the transparent expansion tank.

Only open the cap of the expansion tank when the engine has cooled down. The needle on the coolant temperature gauge in the instrument cluster must be no higher than in the first quarter, otherwise there is a danger of scalding.◀

Online Edition for Part-No. 01 41 0 156 890 - © 09/02 BMW AG

COOLANT

To add coolant

MINI COOPER:

1. Slowly open the cap by pulling at the tab to allow accumulated pressure to escape.
2. Pull open the cap completely.
3. If the coolant is low, slowly add coolant until the correct level is reached – do not overfill.

MINI COOPER S:

1. Open the cap by turning it slightly counterclockwise to allow accumulated pressure to escape.
2. Unscrew and open the cap completely.
3. If the coolant is low, slowly add coolant until the correct level is reached – do not overfill.

The coolant is made up of water and an antifreeze with corrosion resistance. The mixture ratio of 50 to 50 must be kept the entire year due to the required anti-corrosion property. No other additives are required.

Replace the coolant every three years.

BRAKE FLUID

Warning lamp

If the brake warning lamp comes on with the parking brake released:

The brake fluid level is too low, see page 15.

Brake warning lamp for Canadian models.

Adding brake fluid

To add brake fluid or to determine and correct the cause of brake fluid loss, consult your MINI Dealer. Your MINI Dealer is familiar with the specifications for factory-approved brake fluids – DOT 4.

Brake fluid loss may result in extended brake pedal travel. If this occurs, refer to the information on page 84.

Brake fluid is hygroscopic, that is, it absorbs moisture from the air over time.

In order to ensure the brake system's safety and reliability, have the brake fluid changed every two years by a MINI Dealer, see also the Service and Warranty Information Booklet for US models or the Warranty and Service Guide Booklet for Canadian models. Brake fluid is toxic and also damages vehicle paintwork. Always store brake fluid in tightly-closed original containers kept well away from the reach of children. Do not spill the brake fluid and do not fill the brake fluid reservoir beyond the MAX mark. The brake fluid could ignite upon contact with hot engine parts and cause serious burns.◀

Comply with the applicable environmental laws regulating the disposal of brake fluid.◀

Online Edition for Part-No. 01 41 0 156 890 - © 09/02 BMW AG

The MINI Maintenance System has been designed as a reliable means of providing maximum driving and operating safety – and as cost-effective for you as possible.

Please bear in mind that regular maintenance is not only necessary for the safety of your vehicle, but also plays a significant role in maintaining the resale value of the vehicle.

Service Interval Display

While conventional systems specify maintenance according to fixed distances driven, the MINI Maintenance System takes account of the operating conditions of the vehicle, for distances can be driven in many different ways:
60,000 miles / 100,000 km short distance operation can not be equated with 60,000 miles / 100,000 km long distance operation from a maintenance standpoint.

The condition-based MINI Maintenance System includes the Engine Oil Service and Inspections I and II.

Determining the maintenance intervals according to the actual use of the vehicle covers every kind of operating situation. People who drive very little – much less than 6,000 miles / 10,000 km per year – should have the engine oil changed at least every 2 years since oil deteriorates over time, regardless of use.

For more information on the service interval display, see page 60.

Service and Warranty Information Booklet for US models, Warranty and Service Guide Booklet for Canadian models

For additional information on maintenance intervals and procedures, please refer to the Service and Warranty Information Booklet for US models or the Warranty and Service Guide Booklet for Canadian models.

As a precaution against rust, it is advisable to have the body checked for damage from rocks or gravel at the same time, depending upon operating conditions.

▷ Have your vehicle's maintenance and repairs performed at your MINI Dealer. Be sure that all maintenance work is confirmed in the Service and Warranty Information Booklet for US models or the Warranty and Service Guide Booklet for Canadian models. These entries are your proof that the vehicle has received regular maintenance. They are also a requirement for warranty claims.◀

Online Edition for Part-No. 01 41 0 156 890 - © 09/02 BMW AG

Suitable car-care products

Use the cleaning and car-care products available at your MINI Dealer.◀

Washing your vehicle

You can wash your new MINI from the outset in automatic car washes. Preference should be for cloth car washes. If, due to lack of availability, brush car washes must be used, modern systems with soft brushes should be given preference.

When using steam cleaners or high-pressure cleaners, maintain sufficient distance to the vehicle and do not exceed a maximum temperature of 140 °F / 60 °C. If the jet is too close or the pressure is too high, this can lead to damage or initial damage that can develop into more serious damage. Water that enters vehicle components can lead to damage over the long term.◀

After washing the vehicle, apply the brakes briefly to dry them, otherwise water can reduce braking efficiency over the short term and the brake rotors can corrode.◀

Switch the rain sensor off when passing through an automatic car wash, see page 54. Failure to do so could result in damage caused by undesired wiper activation.◀

Rod antenna

If necessary, for example before entering a car wash or a garage with elevator ramp, remove the rod antenna. To do so, grip the rod antenna at the base and unscrew it from the antenna foot by turning it to the left.◀

Headlamps

When cleaning the headlamps, please observe the following: do not rub them dry, and never use abrasives or strong solvents. Remove dirt and contamination – such as insects – by soaking with shampoo and then rinsing with plenty of water. Always use a deicer spray to remove accumulated ice and snow – never use a scraper.◀

Vehicle paintwork

Regular care contributes greatly to driving safety and value retention.

Environmental influences varying from one region to the next can affect the vehicle paintwork. Please base the frequency and scope of car care on these various influences.

Care of upholstery

Depressions that come about on the upholstery material of the seats in daily use can be brushed out using a slightly damp brush against the grain.

The fact that velour lays down is not a quality defect, but rather is inevitable in the case of home textiles or clothing materials.

In the case of strong sunlight and longer parking periods, cover the seats or all windows to prevent discoloration.

Online Edition for Part-No. 01 41 0 156 890 - © 09/02 BMW AG

Care of special parts

▷ Light-alloy wheels*:
Use wheel cleaner especially during the winter months, but do not use any aggressive, acidic, strong alkali or rough cleansers or steam jets above 140 °F / 60 °C. Observe the manufacturer's instructions

▷ Chrome parts* such as cooler grille, door handles, etc.:
Especially if exposed to road salt, carefully clean these parts with plenty of water and possibly with a shampoo additive.
For additional treatment, use chrome polish

▷ Rubber parts:
Treat only with water or rubber care products

Do not use silicon sprays or other silicon-containing care products, otherwise noise and damage could occur.◀

▷ Plastic parts, imitation leather surfaces, headliner, lamp glass, covering glass for the instrument cluster, as well as matt black molded parts:
Clean with water and, if necessary, plastic care products. Do not dampen seats and the headliner.
Never use solvents such as lacquer thinner, heavy-duty grease remover, fuel or similar

▷ Wood paneling*:
Please clean wood paneling and other wood parts only with a damp cloth. Dry off with a soft cloth

▷ Safety belts:
Only clean using mild soap, leaving the belts fitted.
Do not dry clean, as the fabric can be destroyed.
Always roll up safety belts only when dry. Dirty safety belts prevent unrolling and thus negatively affect safety

▷ Floor carpets and floor mats*:
If heavily soiled, clean using interior cleaner. Floor mats can be removed to allow the interior to be cleaned

▷ Wiper blades:
Clean with soapy water. Replace wiper blades twice a year, before and after the cold season. This is particularly important on vehicles fitted with a rain sensor.

Online Edition for Part-No. 01 41 0 156 890 - © 09/02 BMW AG

Leather care

The leather* used by the manufacturer of your MINI is a high-quality natural product processed using state-of-the-art methods, and it will retain its quality level for many years if cared for appropriately.

Regular cleaning and care are necessary, as dust and road dirt scratch in pores and creases and lead to heavy wear as well as premature brittleness of the leather surface.
This is why you should use a cloth or vacuum cleaner to remove dust from the leather on a regular basis.

Since dirt and oil slowly destroy the protective layer of the leather, a treatment with a leather care product is necessary twice a year. This preserves the quality of the leather and prevents electrostatic charging.

Cleaning agents can contain hazardous or health-damaging substances. For this reason, always observe the warnings on the package. For interior cleaning, always open the doors or windows of the vehicle.
Do not use any products that are not intended for cleaning the vehicle.◀

Your MINI Dealer will be glad to advise you on what is important if the vehicle is to be decommissioned for longer than three months.

Online Edition for Part-No. 01 41 0 156 890 - © 09/02 BMW AG

OBD SOCKET

The interface socket for onboard diagnostics is located on the driver's side, behind a cover located beneath the instrument panel. The cover has the letters OBD on it.

The purpose of the OBD system is to ensure proper operation of the emission control system for the vehicle‘s lifetime. The system monitors emission-related components for deterioration and malfunction.

An illuminated lamp informs you of the need for service, not of the need to stop the vehicle.

However, the system should be checked by your MINI Dealer at the earliest possible opportunity.

Under certain conditions, the indicator will blink or flash. This indicates a rather severe level of engine misfire. When this occurs, you should reduce speed and consult the nearest MINI Dealer as soon as possible. Severe engine misfire over only a short period of time can seriously damage emission control components, especially the catalytic converter.

Service Engine Soon warning lamp for Canadian models.

When the filler cap is not properly tightened, the OBD system can detect the vapor leak and the indicator will light up. If the filler cap is subsequently tightened, the indicator lamp should go out within a few days.◀

Online Edition for Part-No. 01 41 0 156 890 - © 09/02 BMW AG

TECHNICAL MODIFICATIONS

Any MINI Dealer will be glad to inform you of the advisability, legal regulations and factory recommendations for technical modifications to the vehicle.
To do so, they require the vehicle identification number from your vehicle documents.

CALIFORNIA PROPOSITION 65 WARNING

California laws require us to state the following warning:

⚠ Engine exhaust, some of its constituents, and certain vehicle components contain or emit chemicals known to the State of California to cause cancer and birth defects and reproductive harm. In addition, certain fluids contained in vehicles and certain products of component wear contain or emit chemicals known to the State of California to cause cancer and birth defects or other reproductive harm.
Battery posts, terminals and related accessories contain lead and lead compounds. Wash your hands after handling.
Used engine oil contains chemicals that have caused cancer in laboratory animals. Always protect your skin by washing thoroughly with soap and water.◀

Online Edition for Part-No. 01 41 0 156 890 - © 09/02 BMW AG

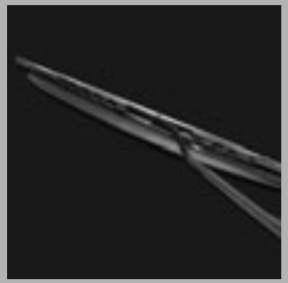

Online Edition for Part-No. 01 41 0 156 890 - © 09/02 BMW AG

OVERVIEW

CONTROLS

OPERATION, CARE, MAINTENANCE

OWNER SERVICE PROCEDURES

TECHNICAL DATA

INDEX

Online Edition for Part-No. 01 41 0 156 890 - © 09/02 BMW AG

ON-BOARD TOOL KIT

Storage location

The picture shows as an example tire change set with on-board tools for vehicles with the space-saver spare tire.

Depending on the level of equipment options, your MINI is fitted with a special on-board tool kit stored at the following locations:

Tire change set for space-saver spare tire:
In the cargo area under the floor mat.

MINI Mobility System with tire change set and on-board tools:
In the cargo area under the floor mat.

Tire change set and on-board tools for Run Flat tires:
Tire change set: in cargo area in a separate bag – On-board tools: on the left behind the side panels next to the emergency kit, see page 124.

WINDSHIELD WIPER BLADES

Windshield wiper

1. Rotate the wiper arm completely out from the windshield
2. Set the wiper blade at an angle
3. Press the securing spring, see arrow
4. Unhook the wiper blade towards the windshield
5. Pull the wiper blade past the wiper arm toward the top
6. Insert the new wiper blade
7. Press into position until you hear it engage.

Rear window wiper

1. Rotate the wiper arm completely out from the windshield
2. Turn the wiper blade as far as it will go to the rear, see arrow
3. Press the wiper blade against the limit and thus out of the mounting
4. Press the new wiper blade into the mounting.

Online Edition for Part-No. 01 41 0 156 890 - © 09/02 BMW AG

Proceed carefully when handling lamps and bulbs. If you are not familiar with any of the procedures, consult your MINI Dealer.

Do not touch the glass portion of a new bulb with your bare hands since even small amounts of impurities burn into the surface and reduce the service life of the bulb. Use a clean cloth, paper napkin, or similar material, or hold the bulb by its metallic base.◀

Replacement bulbs are available from your MINI Dealer.

Whenever working on the electrical system, switch off the electrical accessory you are working on or disconnect the cable from the negative terminal of the battery. Failure to do this could result in short circuits.
To prevent injuries and damage, comply with any instructions provided by the bulb manufacturer.◀

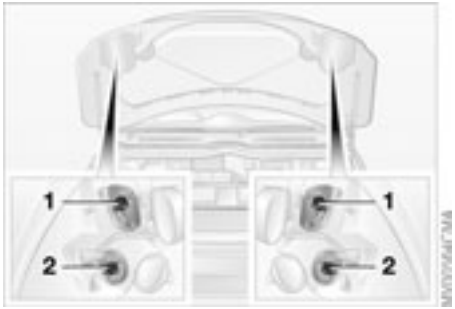

1 Low beams

H7 bulb, 55 Watts

2 High beams

H7 bulb, 55 Watts

The H7 bulb is pressurized. Therefore, wear safety glasses and protective gloves. If the lamp is damaged there is a risk of injury.◀

Replacing bulbs

The headlamps are integrated into the MINI engine bonnet.

1. Pull on the tab of the cover of the defective lamp and open it
2. Press the retaining wire lightly at the eyelet and at the same time guide it outwards
3. Fold the retaining wire down
4. Remove the lamp holder and replace the lamp
5. Reinsert the lamp holder in the correct position
6. Fold the retaining wire back up and catch in place. Ensure that it is placed in the middle of the wire connector.

Xenon lamps*

The service life of these bulbs is very long and the probability of a failure is very low, provided that they are not switched on and off an unusual number of times. If one of these bulbs should nevertheless fail, it is possible to continue driving with great caution using the fog lamps, provided traffic laws in your area do not prohibit this.

Because of the extremely high voltages involved, any work on the xenon lighting system should be carried out by technically-qualified personnel only. Otherwise, there is a risk of fatal injury.◀

Online Edition for Part-No. 01 41 0 156 890 - © 09/02 BMW AG

Turn signal indicators, front

21 Watt bulb

1. Open the bonnet
2. Reach into the opening for the turn signal indicators from above
3. Apply gentle pressure to the bulb holder while turning it to the left
4. Remove and replace the bulb.

Parking lamps and standing lamps

5 Watt bulb

The parking lamps and standing lamps are integrated in the lamp housing of the turn signal indicator.

1. Turn the bulb holder to the left and pull out
2. Remove and replace the bulb.

Side turn signal indicators

5 Watt bulb

1. Press the bulb towards the rear of the vehicle and remove
2. Remove and replace the bulb.

Side marker lamps

3 Watt bulb

Side marker lamps in the wheelhouse paneling of the bumper.

Please contact a MINI Dealer in case of a malfunction.

Fog lamps*

H11 bulb, 55 Watts

Please contact a MINI Dealer in case of a malfunction.

Online Edition for Part-No. 01 41 0 156 890 - © 09/02 BMW AG

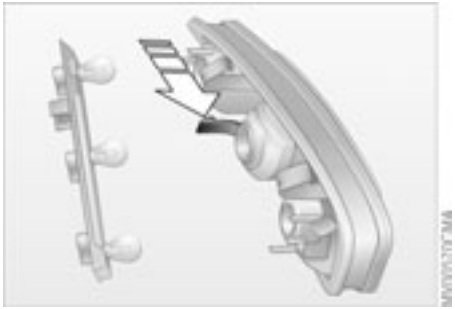

Tail lamps

Rear lamp – 3: bulb 21/5 Watts
Other bulbs: 21 Watts

1	Rear fog lamp – not active	red
2	Turn signal indicator	yellow
3	Rear lamp	red
4	Rear lamp/Brake lamp	red

To make this clear, the illustration shows a dismantled tail lamp with the bulb holder removed. All of the bulbs are integrated in the bulb holder.

To reach the bulb holder, remove the cover of the side trim panel in the cargo area.

Replacing bulbs

1. Unplug the power supply
2. Release the bulb holder, see arrow, and remove
3. Apply gentle pressure to the bulb while turning it to the left
4. Remove and replace the bulb
5. Plug in the power supply receptacle
6. Press the bulb holder into position until you hear it engage.

Backup lamp

MINI COOPER:

Access to the lamp via the back or underside of the bumper.

1. Press the clips together
2. Push the lamp out of the bumper
3. Apply gentle pressure to the bulb while turning it to the left
4. Remove and replace the bulb.

MINI COOPER S:

Please contact a MINI Dealer in case of a malfunction.

Online Edition for Part-No. 01 41 0 156 890 - © 09/02 BMW AG

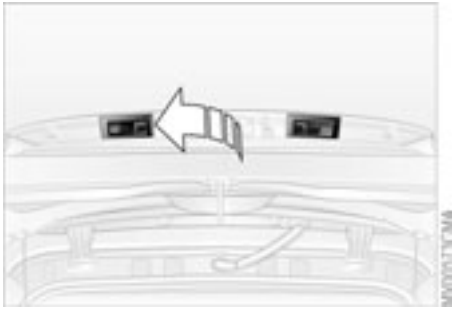

Center high-mount brake lamp

LED strip on the tailgate.

Please contact a MINI Dealer in case of a malfunction.

License plate lamps

5 Watt bulb

1. Apply a screwdriver to the recess and lever out the lamp cover
2. Replace the bulb.

Interior lamps

6 Watt xenon bulb

1. Press out the lamp cover with a screwdriver
2. Remove and replace the bulb.

Reading lamps

2 x 6 Watt xenon bulbs

1. Press out the lamp cover with a screwdriver
2. Unscrew the entire lamp with a screwdriver
3. Remove the bulb from above and replace.

Online Edition for Part-No. 01 41 0 156 890 - © 09/02 BMW AG

Illuminated vanity mirror

Lamps in the vanity mirror in the sun visor.

Please contact a MINI Dealer in case of a malfunction.

Cargo area lamps

5 Watt bulb

1. Press the lamp cover to the left and out with a screwdriver.
2. Remove and replace the bulb.

Footwell lamps

5 Watt bulb

1. Press out the lamp cover with a screwdriver
2. Remove and replace the bulb.

Glove compartment lamp

5 Watt bulb

1. Press out the lamp cover with a screwdriver
2. Remove and replace the bulb.

Online Edition for Part-No. 01 41 0 156 890 - © 09/02 BMW AG

REPAIRING A FLAT TIRE

Safety measures in the event of a flat tire:
Stop the vehicle as far as possible from passing traffic. Switch on the hazard warning flashers.
Turn the steering wheel to the straight-ahead wheel position and engage the steering lock. Engage the parking brake and shift into 1st or reverse gear – selector lever in P.
All passengers should be outside the vehicle and well away from your immediate working area – behind a guardrail, for instance.
If a warning triangle or portable hazard warning lamp is available, set it up on the roadside at an appropriate distance from the rear of the vehicle. Comply with all safety guidelines and regulations.◀

In the event of a flat tire, different procedures should be followed depending on the equipment included in your MINI:

▷ Vehicles with space-saver spare tire, see the next chapter
▷ Vehicles with Run Flat tires, see page 116
▷ Vehicles with MINI Mobility System, see page 118.

CHANGING TIRES – MINI WITH SPACE-SAVER SPARE TIRE*

Additional safety measures in the event of a wheel change:
Change the wheel only on a level, firm surface which is not slippery.
Avoid jacking the vehicle on a soft or slippery support surface – on snow, ice, loose gravel, etc. – as either the vehicle or the jack could slip sideways.
Do not use a wooden block or similar object as a support base for the jack, as this would prevent it from extending to its full support height and reduce its load-carrying capacity.
Do not lie under the vehicle or start the engine when the vehicle is supported by the jack – risk of fatal injury.◀

To change a space-saver tire, proceed as follows:

▷ Remove the space-saver spare tire, see page 113
▷ Prepare the vehicle, see page 114
▷ Jack up the vehicle, see page 114
▷ Fit the space-saver spare tire, see page 115
▷ Tighten the lug bolts, see page 115
▷ Drive with space-saver spare tire, see page 115.

Tire change set

On vehicles with a space-saver spare tire, the tire change set is stored in the cargo area under the floor mat.

1 Chock, folding
2 Hubcap remover
3 Wheel stud wrench
4 Jack
5 Spanner
6 Tow fitting
7 Lifting handle

Online Edition for Part-No. 01 41 0 156 890 - © 09/02 BMW AG

Removing the space-saver spare tire

The screw connection of the space-saver spare tire is in the cargo area under the floor mat, on the base of the storage compartment for the tire change set.

1. Loosen the screw connection using the wheel lug bolt wrench
2. Take out the cover panel
3. Screw the lifting handle from the on-board tool kit onto the thread
4. Raise the lifting handle slightly
5. Squeeze the securing springs
6. The space-saver spare tire is released and must be held by the lifting handle
7. Lower the space-saver spare tire with the lifting handle
8. Unscrew the lifting handle again

Online Edition for Part-No. 01 41 0 156 890 - © 09/02 BMW AG

9. Pull out the space-saver spare tire towards the rear underneath the vehicle
10. Position the space-saver spare tire with the valve facing upwards
11. Unscrew the valve extension from the valve of the space-saver spare tire
12. Unscrew the dust cap from the extension and attach to the space-saver spare tire.

Preparing the vehicle

Read and comply with the safety precautions provided on page 112.◀

1. Secure the vehicle to prevent it from rolling:
   Place the folding chock behind the front wheel on the other side of the vehicle; on downward inclines, place it in front of this wheel.
   If the wheel is changed on a surface with a more severe slope, take additional precautions to secure the vehicle from rolling
2. Loosen the lug bolts by a half turn.

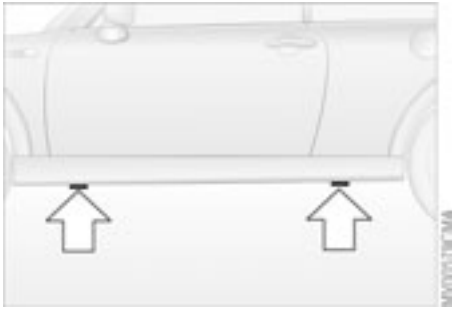

Jacking up the vehicle

1. Place the jack at the jacking point closest to the wheel.
   The jack base must be perpendicular to the surface beneath the jacking point

Online Edition for Part-No. 01 41 0 156 890 - © 09/02 BMW AG

2. Insert the jack head for jacking up in the square recess of the jacking point
3. Jack the vehicle up until the wheel you are changing is raised from the ground.

The vehicle jack is designed for changing wheels only. Do not attempt to raise another vehicle model with it or to raise any load of any kind. To do so could cause accidents and personal injury.◀

Fitting the space-saver spare tire

1. Unscrew the lug bolts and remove the wheel
2. Remove accumulations of mud or dirt from the mounting surfaces of the wheel and hub. Clean the lug bolts
3. Fit the space-saver spare tire
4. Screw at least two lug bolts finger-tight into opposite bolt holes
5. Screw in the remaining bolts
6. Tighten all the lug bolts firmly in a diagonal pattern
7. Lower the vehicle
8. Remove the jack.

Tightening the lug bolts

Tighten the lug bolts in a diagonal pattern.

As soon as possible, have the secure seating of the lug bolts – tightening torque 88.5 lb ft / 120 Nm – checked using a calibrated torque wrench. Otherwise, a wheel coming loose can lead to a severe accident.◀

Replace the defective tire as soon as possible and have the new wheel/tire assembly balanced.

Driving with the space-saver spare tire

Drive cautiously. Do not exceed a speed of 50 mph / 80 km/h.

You must expect changes in vehicle handling such as delayed braking response, longer braking distances, and changes in self-steering properties when close to the handling limits.

Only one space-saver spare tire may be mounted at one time. Reinstall wheels and tires of the same size and specification as soon as possible. Maintain prescribed tire pressures, see page 85.◀

Do not try to fit a full hubcap to the space-saver spare tire, as the hubcap could be damaged.

Check and correct the tire inflation pressure at the earliest opportunity.◀

Online Edition for Part-No. 01 41 0 156 890 - © 09/02 BMW AG

You will recognize Run Flat tires by a circular symbol containing the letters RSC on the side of the tire.

Run Flat tires consist of self-contained tires and special rims. The tire reinforcement ensures that the tire retains some residual safety in the event of pressure drop and driving remains possible to a restricted degree.

The reinforcement on the flanks of the Run Flat tires means that it is usually not possible to detect an air loss from outside.◀

Flat tire

The yellow indicator lamp in the instrument cluster lights up to indicate a flat tire. In addition, a gong sounds, see pages 17, 64.

1. Reduce vehicle speed carefully to under 50 mph / 80 km/h, avoiding hard brake applications and steering maneuvers.
2. Do not exceed a speed of 50 mph / 80 km/h.
3. Identify damaged tires; check tire inflation pressures on all four wheels at the next opportunity, see page 85
4. Correct the tire inflation pressure if you wish to continue your journey and this is permitted, see next text section
5. Have damaged tires changed by your MINI Dealer, see page 88.

Your MINI Dealer has the information needed for working with Run Flat tires and is equipped with the necessary special tools. They provide advice if you wish to replace the tires on your MINI, or re-equip from summer to winter tires or vice versa, also see pages 85, 88, 89.◀

For safety reasons, do not have a damaged safety tire repaired.◀

Online Edition for Part-No. 01 41 0 156 890 - © 09/02 BMW AG

Continuing driving with a damaged tire

With Run Flat tires, you can continue driving under certain conditions, depending on the vehicle load and the severity of the tire damage, at a maximum speed of 50 mph / 80 km/h.

You can determine the possible mileage for continued driving on the basis of the following general indications:

▷ Tire inflation pressure 0 psi / 0 kPa:
approx. 95 miles / 150 km
▷ Tire inflation pressure 7.2–14.5 psi / 50–100 kPa:
approx. 300 miles / 500 km
▷ Tire inflation pressure greater than 14.5 psi / 100 kPa:
approx. 600 miles / 1,000 km.

Tire change set

Your MINI is additionally equipped with a tire change set. This is located in the MINI COOPER in the cargo area under the floor mat.
In the MINI COOPER S the tire change set is located in a separate bag which is attached to the eyelets on the cargo area floor by means of tie-down straps, see page 75.

When changing a tire, always observe the safety measures on page 112, and follow the procedure described on page 114 ff.

▷ In case of a flat tire the tire change set is not needed, since your MINI has Run Flat tires.◀

Online Edition for Part-No. 01 41 0 156 890 - © 09/02 BMW AG

MINI Mobility System

To repair a flat tire you will find a MINI Mobility System in your MINI. With the help of this system you can apply a liquid sealant on the inside of the tire, which seals the damaged area and enables you to continue to drive.

Using the MINI Mobility System

In order to repair a flat tire with the MINI Mobility System, proceed as follows:

▷ Prepare for tire repair, see page 119
▷ Pump in liquid sealant, see page 119
▷ Reinflate the tire, see page 120
▷ Distribute liquid sealant, see page 120
▷ Check tire inflation pressure, see page 121
▷ Drive on, see page 121.

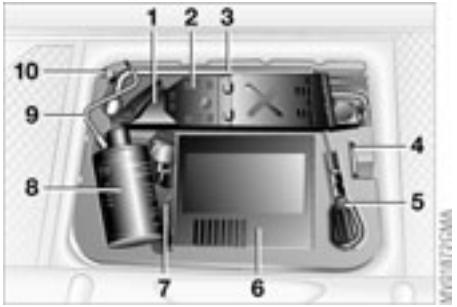

MINI Mobility System with on-board tools

The MINI Mobility System with tire change set and on-board tools is located in the cargo area under the floor mat:

1 Jack
2 Chock, folding
3 Wheel stud wrench
4 Hubcap remover
5 Lug wrench, Phillips screwdriver, towing eyelet
6 Compressor, hose with manometer and plug for cigarette lighter socket
7 Package with filling hose, valve remover, valve core and spare valve
8 Filling canister
9 Hex wrench/screwdriver
10 Adapter for wheel lug lock

Online Edition for Part-No. 01 41 0 156 890 - © 09/02 BMW AG

Preparing for tire repair

Before using the MINI Mobility System read the warning and danger precautions on the equipment.◀

If possible, leave objects in which have been forced into the tire.

Take off the tag regarding speed limits and stick it onto the steering wheel.

Please remember that the liquid canister must be replaced every four years by your MINI Dealer if the equipment has not been used.◀

The instructions for using the MINI Mobility System are also given on the equipment.◀

Pumping in liquid sealant

1. Shake the filling canister
2. Screw the filling hose onto the filling canister
3. Unscrew the dust protection cap from the valve of the defective tire
4. Screw out the valve core with the valve remover. The valve remover is located in a package with the filling hose

   Place the valve core and valve remover only on clean surfaces.◀
5. Remove the cap from the filling hose
6. Push the filling hose onto the tire valve
7. Hold the filling canister with the cap down and squeeze.
   Squeeze the entire contents of the canister into the tire
8. Remove filling hose
9. Screw valve core into the tire valve with the valve remover.

In the event of a dirty valve core or of losing it you will find another valve core in a package with the filling hose.◀

Online Edition for Part-No. 01 41 0 156 890 - © 09/02 BMW AG

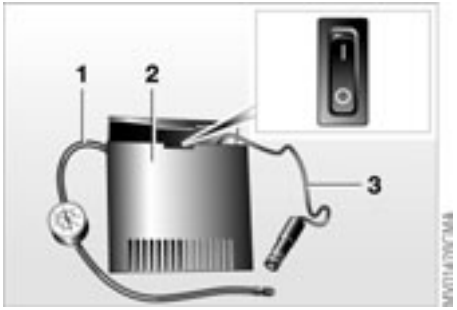

Reinflating the tire

1. Screw hose 1 with manometer onto the tire valve
2. Connect plug 3 to the cigarette lighter socket in the vehicle interior, see page 73
3. Ignition key in position 1:
   Turn on compressor 2
4. Pump up the tires to at least 26.1 psi / 180 kPa, but not to more than 36.2 psi / 250 kPa.
   To check the current air pressure, shut off the device for a short time

   ⚠ Do not run the compressor for longer than 6 minutes, otherwise the device will overheat and possibly be damaged.◀

   ▷ If an air pressure of 26.1 psi / 180 kPa cannot be reached, drive back and forth about 35 ft / 10 m so that the liquid sealant is distributed in the tire. Afterwards repeat the procedure. If an air pressure of 26.1 psi / 180 kPa is still not reached, the tire is too badly damaged. Please contact the nearest MINI Dealer.◀
5. Turn off compressor 2
6. Unscrew hose 1 from the tire valve
7. Store the MINI Mobility System back in the vehicle.

Distributing liquid sealant

Immediately drive for 10 minutes, so that the liquid sealant is uniformly distributed.

▷ Do not exceed a speed of 40 mph / 60 km/h).
If possible do not drive at a speed lower than 10 mph / 20 km/h. Stop at a suitable location.◀

Online Edition for Part-No. 01 41 0 156 890 - © 09/02 BMW AG

Checking tire inflation pressure

1. After driving for 10 minutes:
   Screw hose with manometer back onto the tire valve
2. Check tire pressure

   The tire inflation pressure must be at least 18.8 psi / 130 kPa.
   If it is not, do not continue driving.◀

If 18.8 psi / 130 kPa are displayed:

3. Ignition key position 1:
   Turn on compressor 2. Correct tire inflation pressure to the prescribed value, see tire inflation pressure table, page 86
4. Replace the tire as soon as possible.

The use of the MINI Mobility System may be ineffective with tire damage larger than approx. $^{3}/_{16}$ in / 4 mm. Please contact the nearest MINI Dealer if the tire cannot be made drivable with the MINI Mobility System.◀

Driving on

Do not exceed the permitted maximum speed of 50 mph / 80 km/h, otherwise an accident could happen.◀

Replace the defective tire as soon as possible and have the new wheel/tire assembly balanced.
Have the MINI Mobility System refilled.
Please contact your MINI Dealer. They provide advice if you wish to replace the tires on your MINI or re-equip from summer to winter tires or vice versa.◀

Tire change set

Your MINI is additionally equipped with a tire change set. This is located in the MINI COOPER in the cargo area under the floor mat.

When changing a tire, always observe the safety measures on page 112, and follow the procedure described on page 114 ff.

In case of a flat tire the tire change set is not necessary due to the availability of the MINI Mobility System.◀

Online Edition for Part-No. 01 41 0 156 890 - © 09/02 BMW AG

BATTERY

Location in the MINI COOPER

The battery is located in the engine compartment.

Exact location, see page 92.

Location in the MINI COOPER S

The battery is located in the cargo area under the floor mat.

Battery care

The battery is absolutely maintenance-free, that is, the original electrolyte will normally last for the service life of the battery under moderate climatic conditions.

For all questions regarding the battery, please consult your MINI Dealer.◀

Charging the battery

Only charge the battery in the vehicle via the terminals in the engine compartment with the engine switched off, see "Jump-starting" on page 124.

Whenever working on the electrical system, disconnect the cable from the negative terminal of the battery. Failure to do this could result in fire hazards or injury due to short circuits.◀

Disposal

Return used batteries to a recycling point or your MINI Dealer. Maintain the battery in an upright position for transport and storage. Secure the battery to prevent it from tilting during transport.◀

Online Edition for Part-No. 01 41 0 156 890 - © 09/02 BMW AG

If an electrical device fails, switch it off and check the fuse.

Plastic tweezers that you can use to pull fuses out of their sockets can be found in the fuse box in the vehicle interior, see next column.

In the engine compartment

In the MINI COOPER on the right next to the battery.
In the MINI COOPER S on the right next to the air filter box.

Open the cover panel of the fuse box. To do so, press the clip fastener.

In the vehicle interior

On the left side of the footwell in the side trim panel.

Open the cover panel of the fuse box. To do so, press the fastener.

Do not attempt to repair a blown fuse or replace it with a fuse of a different color or Ampere rating. To do this could cause a fire in the vehicle resulting from a circuit overload.◀

If a fuse blows a second time, have the cause of the damage rectified by your MINI Dealer.◀

Online Edition for Part-No. 01 41 0 156 890 - © 09/02 BMW AG

WARNING TRIANGLE*

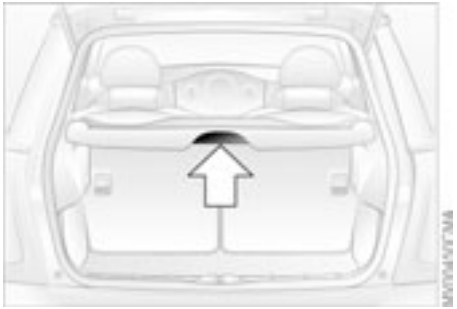

The warning triangle is located beneath the luggage compartment cover.

Comply with legal requirements requiring you to carry a hazard warning triangle in the vehicle.◀

FIRST-AID KIT*

The first-aid kit is located on the left in the luggage compartment, behind the side trim panel.

Some articles in the first-aid kit are perishable. For this reason, check the expiration dates of each of the items regularly, and replace any whose expiration dates have passed. Source: any pharmacy. Comply with legislation requiring you to carry a first-aid kit in the vehicle.◀

JUMP-STARTING

Do not use spray starter fluids to start the engine.◀

When your battery is discharged, you can use two jumper cables to start your vehicle with power from the battery in a second vehicle. Correspondingly you can help start another vehicle. Only use jumper cables with fully insulated handles on the terminal clamps.

Do not touch live wiring and cables on a running engine. There is a risk of fatal injury if you do this. Carefully observe the following instructions to avoid personal injury and/or damage to either vehicle or both vehicles.◀

Online Edition for Part-No. 01 41 0 156 890 - © 09/02 BMW AG

JUMP-STARTING

Preparing for jump-starting

1. Check whether the battery of the support vehicle has 12 Volts and approximately the same capacity – measured in Ah, printed on the battery
2. Switch off the engine of the support vehicle
3. Switch off any electrical systems and components in both vehicles – except for the hazard warning flashers of the support vehicle.
   ▷ Do not disconnect the discharged battery from the vehicle electrical system
   ▷ Make certain that there is no contact between the bodywork of the two vehicles – short circuit hazard!
4. With the battery of the MINI COOPER, remove the cover panel. To do so, press both clips at the same time
   or
   with the MINI COOPER S, open the cover of the positive terminal connection for jump-starting*, see arrow 1.

Connect the jumper cables

⚠ Adhere to the sequence also when providing support for other vehicles; failure to observe this procedure can lead to sparks at the terminals and pose an injury hazard.◀

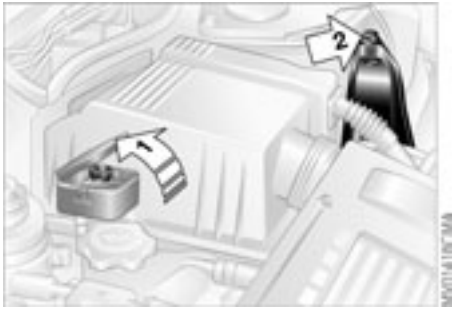

1. On the MINI COOPER S, the positive terminal connection for jump-starting, see arrow 1, functions as the positive battery terminal.
   Make a connection with the "+" jumper cable between the positive terminal of the discharged battery and the positive terminal of the support battery
2. Use the second, "–" jumper cable to set up the connection between the negative terminals of both vehicles.
   To do so:
   ▷ Connect one terminal clamp to the negative terminal and/or to an engine or body ground of the support vehicle
   ▷ Connect the second terminal clamp to the negative terminal of the battery and/or to an engine or body ground of the vehicle to be started. For the MINI, see arrow 2.

Performing the jump-start

1. Start the engine of the vehicle providing the current and allow to run at a fast idle speed for several minutes
2. Start the engine on the vehicle with the discharged battery in the usual manner.
   ▷ If the first start attempt is not successful, wait a few minutes before another attempt in order to allow the discharged battery to recharge

⚠ On the MINI:
Before disconnecting the jumper cables, switch on the lighting, rear window defroster and the highest blower speed as well as the engine for at least approx. 10 seconds to prevent a voltage surge from the regulator to the electrical systems and components.◀

3. Then disconnect the jumper cables in the reverse order.

If necessary have the battery checked and completely charged at a MINI Dealer.

Online Edition for Part-No. 01 41 0 156 890 - © 09/02 BMW AG

For towing, use either a tow bar or a nylon rope or nylon belts that prevent sudden jerking movements.

Tow fitting

The screw-in tow fitting is stored in the onboard tool kit; be sure that it remains in the vehicle at all times. This fitting is designed for installation in the tow sockets located at the front and rear of the vehicle. It is intended for towing on paved road surfaces only.

Access to tow sockets

Use a suitable object – e.g. credit card, screwdriver – to press out the covers from the recess.

Firmly screw in the towing eyelet until it stops. If this is not done, the threads could be damaged.
Never attach tie-down hooks, chains, straps, or tow hooks to tie rods, control arms, or any other part of the vehicle suspension, as severe damage to these components will occur, possibly leading to accidents.◀

Avoid staggered towing and be careful that the towing rope is in tight tension before starting to drive the vehicle that is towing.◀

Tow bars

If the tow fittings of the two vehicles are not directly opposite one another, please note:

- ▷ Clearance and maneuvering capability will be strictly limited in corners
- ▷ The inclination of the tow bar generates lateral force – critical above all if the road surface is slippery.

Do not tow a vehicle that is heavier than the towing vehicle, otherwise it will no longer be possible to control the vehicle's response.◀

Online Edition for Part-No. 01 41 0 156 890 - © 09/02 BMW AG

Tow-starting

It is not possible to start the engine of a vehicle equipped with an automatic transmission by towing or pushing.

For instructions on jump starting, refer to page 124.

Never attempt to use your vehicle to push another car, since damage to the energy-absorbing bumpers could result.

Towing a vehicle

Only tow vehicles with Continuously Variable automatic Transmission (CVT) with the front wheels raised or on a special transport vehicle, otherwise the transmission can be damaged.◀

1. Place gear selector lever in neutral or idle
2. Towing speed:
   Max. 45 mph / 70 km/h
3. Towing distance:
   Max. 95 miles / 150 km
4. Leave the ignition key at position 1 to ensure that the brake lamps, turn signals, horn and windshield wipers remain operative, and to prevent the steering lock detent from engaging
5. Switch on the hazard-warning system, observe country-specific regulations.

Find some means of identifying the vehicle in tow, for instance, place a sign or warning triangle in the rear window.

Make sure that the ignition key remains in position 1 even when the electrical system has failed to prevent the steering lock from engaging.
The steering and brakes are without power assist when the engine is off. This means that increased effort is required for steering and braking.◀

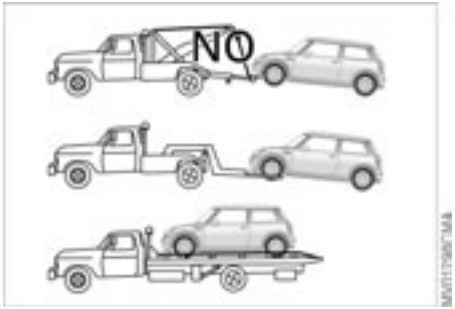

Towing with a commercial tow truck

▷ Do not tow with sling-type equipment
▷ Use a wheel-lift or flatbed carrier
▷ Please comply with applicable towing laws.

Never allow passengers to ride in a towed vehicle for any reason.◀

Online Edition for Part-No. 01 41 0 156 890 - © 09/02 BMW AG

Online Edition for Part-No. 01 41 0 156 890 - © 09/02 BMW AG

OVERVIEW

CONTROLS

OPERATION, CARE, MAINTENANCE

OWNER SERVICE PROCEDURES

TECHNICAL DATA

INDEX

Online Edition for Part-No. 01 41 0 156 890 - © 09/02 BMW AG

ENGINE DATA

		MINI COOPER	MINI COOPER S
Displacement Number of cylinders	cu in / cm^3	97.52 / 1,598 4	97.52 / 1,598 4
Maximum output at engine speed	bhp / kW rpm	115 / 85 6,000	163 / 120 6,000
Maximum torque at engine speed	lb ft / Nm rpm	110 / 149 4,500	155 / 210 4,000
Compression ratio	ε	10.6	8.3
Stroke Bore	in / mm in / mm	3.38 / 85.8 3.03 / 77	3.38 / 85.8 3.03 / 77
Fuel-injection system		Digital electronic engine-management system	

Online Edition for Part-No. 01 41 0 156 890 - © 09/02 BMW AG

DIMENSIONS

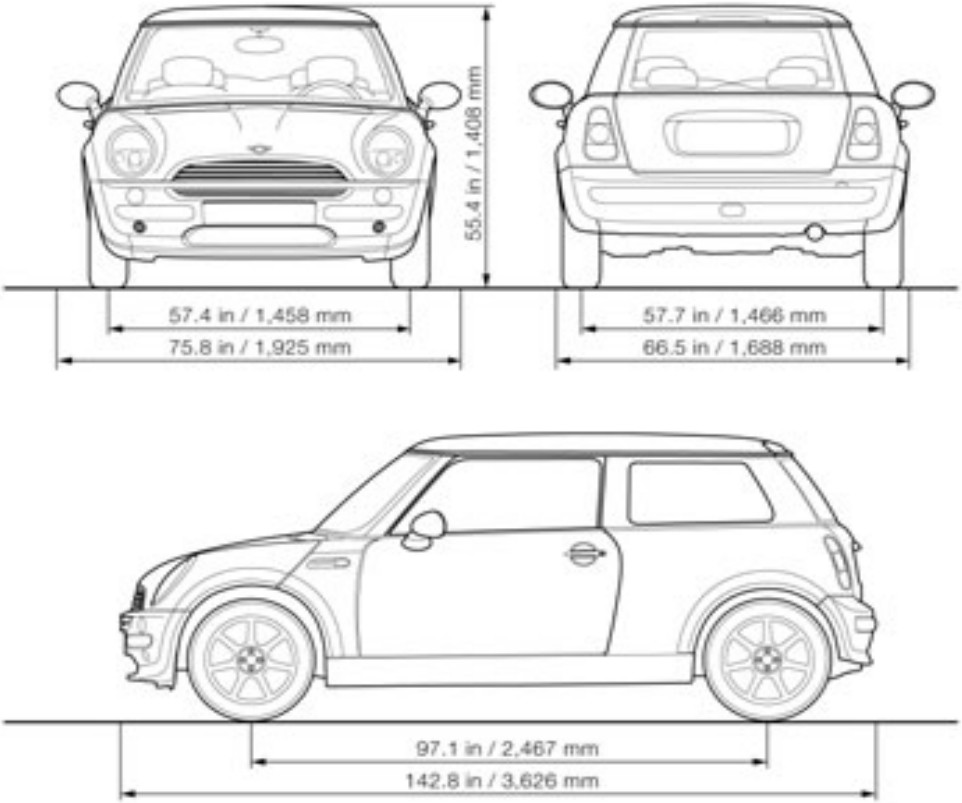

All measuring units in inches / millimeters. Smallest turning circle dia. 35 ft / 10.66 m.

Online Edition for Part-No. 01 41 0 156 890 - © 09/02 BMW AG

WEIGHTS

		MINI COOPER	MINI COOPER S
Curb weight with manual transmission with Continuously Variable automatic Transmission (CVT)	 lbs / kg lbs / kg	 2,526 / 1,146 2,557 / 1,160	 2,678 / 1,215 –
Approved gross vehicle weight with manual transmission with Continuously Variable automatic Transmission (CVT)	 lbs / kg lbs / kg	 3,340 / 1,515 3,373 / 1,530	 3,494 / 1,585 –
Approved front axle load	lbs / kg	1,918 / 870	1,962 / 890
Approved rear axle load	lbs / kg	1,609 / 730	1,698 / 770
Approved roof load – with special MINI roof rack	lbs / kg	165 / 75	165 / 75
Cargo area volume	cu ft / liters	5.3 / 150	5.3 / 150

Online Edition for Part-No. 01 41 0 156 890 - © 09/02 BMW AG

CAPACITIES

			Notes
Fuel tank Reserve	gal. / liters	approx. 13.2 / 50 approx. 2.1 / 8	Fuel quality, see page 83
Windshield/ Headlamp washer reservoir	quarts / liters	approx. 2.1 / 2.0 approx. 2.6 / 2.5	More details, see page 94
Cooling system including heater circuit	quarts / liters	5.6 / 5.3 MINI COOPER 6.3 / 6.0 MINI COOPER S	More details, see page 96
Engine with oil filter change	quarts / liters	4.7 / 4.5 MINI COOPER 4.7 / 4.5 MINI COOPER S	High Performance Synthetic Oil: for more details, see page 95
Manual transmission	quarts / liters	approx. 2.1 / 2.0 MINI COOPER approx. 1.8 / 1.7 MINI COOPER S	Contact your MINI Dealer for more details
Continuously Variable automatic Transmission (CVT)	quarts / liters	approx. 4.2 / 4.0 MINI COOPER	Contact your MINI Dealer for more details

Online Edition for Part-No. 01 41 0 156 890 - © 09/02 BMW AG

Online Edition for Part-No. 01 41 0 156 890 - © 09/02 BMW AG

OVERVIEW

CONTROLS

OPERATION, CARE, MAINTENANCE

OWNER SERVICE PROCEDURES

TECHNICAL DATA

INDEX

Online Edition for Part-No. 01 41 0 156 890 - © 09/02 BMW AG

A
ABS (Antilock Brake System) 16, 17, 83
Accessories 7, 99
Activated-charcoal filter 72
Adjusting
backrest 35
steering wheel 38
Air conditioner operation
air conditioning system 68
automatic climate control 71
Air conditioning system 67
Air distribution
air conditioning system 68
automatic climate control 71, 72
Air outlets, ventilation 69
Air pressure 85
Air recirculation 68, 71
Air supply
air conditioning system 68
automatic climate control 71
Air vents 69, 72
Air, dry 68
Air, drying 71
Airbags 16, 33, 40
Airing out 69
Alarm system 31
All-season tires 89
Antenna 99
Antifreeze 96
Antilock Brake System (ABS) 16, 17, 83
Anti-theft system 31
Aquaplaning, see Hydroplaning 81
ASC+T (Automatic Stability Control plus Traction) 16, 17, 62
Ashtray 73
AUTO Program, see Automatic air distribution 71
Auto washing 99
Automatic
air distribution 71
air supply 71
cruise control 56
Automatic car wash 99
Automatic climate control 70
Automatic Stability Control plus Traction (ASC+T) 16, 17, 62
Average fuel consumption 61
Average speed 61
Axle loads 132

B
Backrest, adjusting 35
Backup lamps 48
bulb replacement 109
Bar, towing 126
Battery 124
charge current 15
charging 122
disposal 122
maintenance 122
Battery, remote control 22
Belts 33, 38
Beverage holder 73
Blower 71
BMW 6
Bonnet 16, 91
Bore 130
Brake fluid level 15, 84, 97
Brake hydraulic system 15
Brake lamp
bulb replacement 109
Brake pads 80, 84
Brake rotors 80
Brake system 80, 84
brake fluid 97
Brakes 81, 84
Braking system 16
Breaking-in 80
Bridging 124
Bulb replacement
backup lamps 109
brake lamp, center 110
cargo area lamps 111
footwell lamps 111
front fog lamps 108
front turn signal indicators 108
glove compartment lamp 111
interior lamps 110
license plate lamp 110
parking lamps 108
reading lamps 110
rear lamps 109
side turn signal indicators 108
standing lamps 108
tail lamps 109
vanity mirror 111

C
California Proposition 65 warning 103
Capacity
fuel tank 133
Car care 99
Car wash 99
Car-care products 99
Care 99
chrome parts 100
floor mats 100
imitation leather 100
leather 101
light-alloy wheels 100
plastic parts 100
rubber parts 100

Online Edition for Part-No. 01 41 0 156 890 - © 09/02 BMW AG

safety belts 100
upholstery material 99
wiper blades 100
wood parts 100
Cargo
stowing 75
Cargo area 75
cover 74
lamps 53, 111
opening, remote control volume 132
Caring for your vehicle 99
Carpets 100
Cassette player, see separate Owner's Manual
CD changer, see separate Owner's Manual
CD player, see separate Owner's Manual
Center high-mount brake lamp bulb replacement 110
Central locking system 23, 26
Changing battery, remote control 22
Changing bulbs 107
Changing lamps 107
Changing tire
space-saver spare tire 112
tire change set 112, 117, 121
Checking oil level 94
Checking tire inflation pressure 121
Child seat 41
Child seat fastening system LATCH 43
Child-restraint systems 41
Chrome parts 100
Cigarette lighter 73
socket 73
Cleaning headlamps 99
Cleaning rear window 55
Cleaning windshield 55
Clock 60
Closing
from inside 26
from outside 23
Clothes hooks 81
Clutch 80
Cockpit 12
Combination of wheels/ tires 89
Compact Disc player, see separate Owner's Manual
Compression ratio 130
Compressor 118, 120
Computer 60
average fuel consumption 61
average speed 61
cruising range 61
outside temperature 61
Condensation 68, 71
Consumption 61
Consumption display, see Fuel gauge 58
Continuously Variable automatic Transmission (CVT) 49
electronic transmission control module EP 51
gear display 51
ignition 45
interlock 45
manual mode 50
parking 50
reverse gear 50
selector lever shift-lock 45, 49
shiftlock 49
sport program 50
towing 127
transmission malfunction 51
Control elements 12
Convenience opening from inside 26
Convenience operation
sliding/tilt sunroof 25, 29
windows 25
Coolant 96
level 96
thermometer 59
Cooling 68, 71
Copyright 2
Cosmetic mirror, see Vanity mirror 39
Cruise control 18, 19, 56
Cruising range 61
Cup holder, see Beverage holder 73
Curb weight 132
Currency of the Owner's Manual 7
CVT (Continuously Variable automatic Transmission) 49
Cylinders 130

D

Dashboard 12
Data
dimensions 131
engine 130
technical 130
weight 132
Daytime driving lamps 52
Deep water, see Water on roadways 81
Defrost setting 69

Online Edition for Part-No. 01 41 0 156 890 - © 09/02 BMW AG

Defrosting windows 69, 72
air conditioning system 69
automatic climate control 72
Dimensions 131
Dimming
interior mirror 39
Dipstick, engine oil 94
Dirt on the paintwork 99
Disc brakes 84
Displacement 130
Display elements 13, 14
coolant thermometer 59
fuel gauge 58
indicator and warning lamps 15
odometer 58
service interval display 60
with navigation system 14
Display lighting 53
Distance remaining 61
Doors
keys 22
locking 24
manual operation 25
unlocking 24
DOT quality grades 87
Driving lamps 52
Driving notes, general 81
Dry air 68, 71
DSC (Dynamic Stability Control) 16, 63
Dynamic Stability Control (DSC) 16, 63

E
Easy entry 35
EBD (Electronic Brake Force Distribution) 16, 83
Electric power windows 28
Electrical defect
driver's door 25
sliding/tilt sunroof 30
tailgate 27
Electronic Brake Force Distribution (EBD) 16, 83
Electronic transmission control module
Continuously Variable automatic Transmission (CVT) 51
Emergency operation
driver's door 25
sliding/tilt sunroof 30
tailgate 27
Engine 80
electronics 17
power output 17
speed 17, 58
starting 46
Engine compartment
MINI COOPER 92
MINI COOPER S 93
Engine oil 94
additives 95
consumption 94
dipstick 94
High Performance Synthetic Oil 96
level 94
pressure 15
recommended grades of oil 95
viscosities 96
Entry to the rear 35
Exterior finish, care 99
Exterior mirrors 39
Eyelets, towing 126

F
Failure, tires 64
False alarm 32
Fans 68
Fastening safety belts 16, 38
Filling canister 118, 119
Filling hose 118
First-aid kit 124
Flat 116
Flat tire 64, 112
MINI Mobility System 118
Run Flat tires 116
space-saver spare tire 112
Flat Tire Monitor 16, 17, 64
Floor coverings, floor carpets 100
Fluid capacities
fuel tank 133
headlamp washer system 133
windshield washer system 133
Fog lamps 53
Foldable rear backrest 74
"Follow me home" lamps 52
Foot mats 100
Footbrake 84
Footwell lamps 53
bulb replacement 111
Front airbags 40
Front fog lamps
bulb replacement 108
Front seat adjustment 34
Fuel
consumption 61
consumption display 58
preparation 130
quality 83
tank capacity 82, 133

Online Edition for Part-No. 01 41 0 156 890 - © 09/02 BMW AG

Fuel gauge 58
Fuses 123

G
Gas display, see
Fuel gauge 58
Gasoline 83
Gear display 51
Continuously Variable automatic Transmission (CVT) 51
General driving notes 81
Glove compartment 73
Glove compartment lamps
bulb replacement 111
Grills 69, 72

H
Handbrake 47
Hazard warning flashers 12
Head airbags 40
Head restraints 37
Headlamp cleaning
system 55, 94
filling 94
Headlamp flasher 52
Headlamps
cleaning 55, 99
lamp replacement 107
Heated
outside rear view mirror 39
rear window 68, 71
seats 36
windshield 68, 71
windshield washer jets 55
Heater 67
outside rear view mirror 39
windshield 68
Heating
rear window 68
seats 36
Heavy cargo 75
Height 131
Hex wrench 118
High beams 18, 52, 107
High Performance
Synthetic Oil 96
recommended grades of oil 96
Horn 12
Hub cap remover 112, 118
Hydroplaning 81

I
Ignition 45
Ignition key 22
Ignition key position,
see Ignition 45
Illuminated vanity mirror 39
Imitation leather 100
Imprint 2
Index 2
Indicator lamps 15
Individual air distribution 72
Inflation pressure 85
INSPECTION 60
Instrument cluster, see Display elements 13
Instrument lighting 53
Instrument panel 12
Interface socket
for Onboard Diagnostics 102
Interior lamps 53
bulb replacement 110
Interior mirror
automatic dimming 39
Interior motion sensor 31, 32
Interior protection
turning off 25, 32
Interior rearview mirror 39
Interlock 45
Interval
operation, wipers 54
Interval display, service 98

J
Jack 112
Jump-starting 124

K
Keys 22
multifunction steering wheel 19
Kickdown 50

L
Lamp replacement
headlamps 107
high beams 107
low beams 107
parking lamp 107
Lamps 52
backup lamps 109
brake lamps 109, 110
cargo area lamps 111
daytime driving lamps 52
fog lamps 53
footwell lamps 111
front fog lamps 108
glove compartment 111
high beams 107
instrument lighting 53
interior lamps 53, 110
license plate lamp 110
low beams 52, 107
parking lamps 52, 108
reading lamps 53, 110
rear fog lamp 109
standing lamps 52, 108
tail lamp 109

Online Edition for Part-No. 01 41 0 156 890 - © 09/02 BMW AG

turn signal indicators 108
xenon lamps 107
Lashing eyes 75
LATCH
child seat fastening system 43
identification 43
Leather care 101
LED light-emitting diodes 54
Length 131
License plate lamp
bulb replacement 110
Lifting handle, space-saver spare tire 112
Light-alloy wheels 100
Lighting
cargo area lamps 53
"Lights on" warning 52
Liquid sealant
filling 119
Load securing devices 75
Loading 75
Loading cargo 75
Low beams 52, 107
Lug bolts 114
Luggage compartment
see Cargo area
Luggage compartment cover, see Cargo area cover 74
Luggage compartment lamps, see Cargo area lamps 111
Luggage rack, see Roof-mounted luggage rack 76
Lumbar support 35

M
M+S tires 89
Maintenance 60, 98
Maintenance System 98
Manual operation
driver's door 25
sliding/tilt sunroof 30
tailgate 27
Manual transmission 48
Manufacturer 6
Master key
initialization 22
with remote control 22
Mechanical key 22
MINI Maintenance System 98
MINI manufacturer 6
MINI Mobility System
compressor 120
liquid sealant 119
on-board tools 118
Mirror heater 39
Mirrors 39
Modifications, technical 103
Multifunction steering wheel 19
Multifunction switch 52

N
Navigation system, see separate Owner's Manual 14
Non-smoker's equipment package, see Cigarette lighter socket 73
Nozzles 69, 72
Nylon rope 126

O
OBD interface socket 102
Odometer 58
Oil 94
additives 95
consumption 94
dipstick 94
High Performance Synthetic Oil 96
level 15
pressure 15
recommended grades of oil 95
viscosities 96
Oil change intervals, see Service and Warranty Booklet for US models, or Warranty and Service Guide Booklet for Canadian models
Oil service 60
Old batteries 122
On-board tool kit 106
On-board tools 112, 118
Opening
from inside 26
from outside 23
Outside temperature display 61

P
Park Distance Control (PDC) 66
Parking brake 16, 47
Parking lamps 52
bulb replacement 108
Parking lamps/Low beams 52
Parking vehicle 81
Particle filter 69, 72
PDC (Park Distance Control) 66
Phillips screwdriver 118
Plastic 100
Pollen 69, 72
Power output 17, 130
Power supply 12 V 73
Power windows
electric power windows 28
initialize 28
Pressure, tires 85, 115, 120
Pushing/Towing 126

Online Edition for Part-No. 01 41 0 156 890 - © 09/02 BMW AG

Q
Quality grading, tire 88

R
Radiator 96
Radio, see separate Owner's Manual
Rain sensor 54
Reading lamps 53
bulb replacement 110
Rear backrest
foldable 74
Rear fog lamp
bulb replacement 109
Rear lamps 48, 109
Rear shelf, see Cargo area cover 74
Rear window defroster
air conditioning system 68
automatic climate control 71
Rear window wiper 55
replacing 106
Rearview mirror 39
Recirculated air mode
air conditioner system 68
automatic climate control 71
Recirculation of air 68, 71
Reclining seat 34
Recommended grades of oil 96
Refueling, fuel filler door 82
Remaining distance for service 60
Remote control 23
battery 22
changing battery 22
initialization 22
Removing fog on windows
air conditioning system 69
automatic climate control 72
Replacement key 22
Reporting safety defects 8
Reserve indicator light 58
Restore tire inflation pressure 120
Restraint system 41
Reverse gear 48, 50
Rod antenna 99
Roller sun blind, rear window blind 30
Roof load 132
Rope, towing 126
Rubber parts 100
Run Flat tires 85, 88, 116
winter tires 89

S
Safety belts 16, 33
adjusting 38
care 100
Safety lock buttons 26
Seat heater 36
Securing cargo 75
Selector lever
shiftlock 45, 49
Service and Warranty Information Booklet for US models 98
Service interval
display 60, 98
Setting up the car 44
Shiftlock 49
Side airbags 40
Side turn signal indicators
bulb replacement 108
Sitting safely with airbags 33
Sitting safely with safety belts 33
Size 131
Sliding/tilt sunroof 29
convenience operation 25, 29
Snow chains 90
Space-saver spare tire
changing tires 112
Spare key 22
Speed 130
Speed control see Cruise control 56
Speed, winter tires 90
Split rear backrest 74
Spray jets 55
Standing lamps 52
bulb replacement 108
Starting 46
problems 46, 124, 126
with a discharged battery 124
Steering lock 45
Storage, tires 89
Storing the vehicle 101
Sun visors 39
Switches 12
Symbols 6

T
Tachometer 13, 14, 58
Tail lamps
bulb replacement 109
Tailgate 16, 27
manually unlocking 27
opening, remote control 24
Tank display 58
Technical data 130
Technical modifications 103
Temperature
air conditioning system 68

Online Edition for Part-No. 01 41 0 156 890 - © 09/02 BMW AG

automatic climate control 71
engine coolant 59
high 81
layering 69, 72
outside temperature 61
tires 88
The right tires 89
Third brake lamp
bulb replacement 110
Tilt alarm sensor 31
remote control 25
turning off 32
Tire change set 112, 117
Tire failure 16
Tire inflation pressure 85, 90
Tires 85, 89
all-season tires 89
break-in 80
changing 112
condition 87, 90
damage 87
inflation pressure 85
M+S tires 89
pressure 85
replacement 87
Run Flat tires 85, 88, 116
snow chains 90
storage 89
temperature 88
the right choice 89
tread 87
winter tires 89
with emergency running properties, see Run Flat tires 85, 88, 116
Tools 106
Torque 130
Total weight 132
Tow bar 126
Tow socket for towing eyelet 126
Towing 126
with Continuously Variable automatic Transmission (CVT) 127
Towing eyelet 126
Towing rope 126
Traction 88
Transmission 48
Transmission malfunction Continuously Variable automatic Transmission (CVT) 51
Transporting children safely 41
Tread wear 88
Trip odometer 58
Trunk
cover, see Cargo area
cover 74
lid, see Tailgate 27
opening, remote control 24
see Cargo area
volume 132
Turn signal indicators 18, 52
bulb replacement 108
Turning off
engine 47

U

Uniform Tire Quality Grading 88
Unwanted alarm 32

V

Valve core and spare valve 118
Valve remover 118
Vanity mirror
bulb replacement 111
illuminated 39
Vehicle
breaking-in 80
dimensions 131
exterior finish 99
operating 46
parking 81
starting 46
storing 101
turning off 47
washing 99
weight 132
Vehicle Memory 44
Ventilation
draft-free 69, 72
heater 67
Vents, ventilation 72

W

Warning lamp 15
Warning triangle 124
Warranty 98
see Service and Warranty Information Booklet for US models, Warranty and Service Guide Booklet for Canadian models
Warranty and Service Guide Booklet for Canadian models 98
Washer systems 94
Washer/wiper system 54
Waste container 73
Water on roadways
deep water 81
Weight 132
Wheel and tire combination 89
Wheel chock
foldable 112, 117, 118
Wheel lug bolts
wrench 112, 113, 118
Wheelbase 131

Online Edition for Part-No. 01 41 0 156 890 - © 09/02 BMW AG

Width 131
Windows, convenience
operation 25
Windshield heating
air conditioning system 68
automatic climate
control 71
Windshield washer
system 54, 94
filling 94
Windshield wiper blades
care 100
replacement 106
Windshield wipers 54, 106
Winter tires 89
all-season tires 89
Run Flat tires 89
speed 89
Wiper blades 100
replacement 106
Wiper/washer system 54
Wood decoration 100
Wood paneling 100
Work in the engine
compartment 91

X

Xenon lamps 107

Online Edition for Part-No. 01 41 0 156 890 - © 09/02 BMW AG

Online Edition for Part-No. 01 41 0 156 890 - © 09/02 BMW AG

REFUELING

Fuel	
Designation	
AKI:	

Engine oil	
Quality	

The oil volume between the two notches on the dipstick corresponds to approx. 1.1 US quarts / 1 liter.

Tire inflation pressure	Summer		Winter	
	front	rear	front	rear
2 persons				
4 persons plus luggage				

To ensure that you always have convenient access to all essential information when you stop for fuel, we recommend that you take the time to fill out the adjoining chart by entering the data that applies to your vehicle.

MINI RECOMMENDS Castrol

Online Edition for Part-No. 01 41 0 156 890 - © 09/02 BMW AG

01 41 0 156 890 ue

DRIVE ME.

Online Edition for Part-No. 01 41 0 156 890 - © 09/02 BMW AG