Kia, THE COMPANY

Thank you for becoming the owner of a new Kia vehicle.

As a global car manufacturer focused on building high-quality vehicles with exceptional value, Kia Motors is dedicated to providing you with a customer service experience that exceeds your expectations.

All information contained in this Owner's Manual was accurate at the time of publication. However, Kia reserves the right to make changes at any time so that our policy of continual product improvement can be carried out.

This manual applies to all trims of this vehicle and includes images, descriptions, and explanations of optional as well as standard equipment. As a result, some material in this manual may not be applicable to your specific Kia vehicle. Some images are shown for illustration only and may show features that differ from those on your vehicle.

Drive safely and enjoy your Kia!

Thank you for choosing a Kia vehicle.

When you require service, remember that your Kia dealer knows your vehicle best. Your dealer has factory-trained technicians, recommended special tools and genuine Kia replacement parts. It is dedicated to your complete customer satisfaction.

Because subsequent owners require this important information as well, this publication should remain with the vehicle if it is sold.

This manual will familiarize you with operational, maintenance and safety information about your new vehicle. It is supplemented by a Warranty and Consumer Information manual that provides important information on all warranties regarding your vehicle.

We urge you to read these publications carefully and follow the recommendations to help assure enjoyable and safe operation of your new vehicle.

Kia offers a great variety of options, components and features for its various models. Therefore, some of the equipment described in this manual, along with the various illustrations, may not be applicable to your particular vehicle.

The information and specifications provided in this manual were accurate at the time of printing. Kia reserves the right to discontinue or change specifications or design at any time without notice and without incurring any obligation. If you have questions, always check with your Kia dealer.

We assure you of our continuing interest in your motoring pleasure and satisfaction in your Kia vehicle.

© 2019 Kia Canada Inc.

All rights reserved. Reproduction by any means, electronic or mechanical, including photocopying, recording, or by any information storage and retrieval system or translation in whole or part is not permitted without written authorization from Kia Canada Inc..

Printed in Mexico

TABLE OF CONTENTS

Introduction	1
Your vehicle at a glance	2
Safety features of your vehicle	3
Features of your vehicle	4
Driving your vehicle	5
What to do in an emergency	6
Maintenance	7
Specifications & Consumer information	8
Index	I

Introduction

1

How to use this manual 1-2
Fuel requirements 1-3
• Gasoline containing alcohol and methanol. 1-3
• Do not use methanol 1-4
• Fuel Additives 1-5
• Operation in foreign countries. 1-5
Vehicle modifications 1-6
Vehicle break-in process 1-6
Vehicle data collection and event data recorders. . 1-7

HOW TO USE THIS MANUAL

We want to help you get the greatest possible driving pleasure from your vehicle. Your Owner's Manual can assist you in many ways. We strongly recommend that you read the entire manual. In order to minimize the chance of death or injury, you must read the WARNING and CAUTION sections in the manual.

Illustrations complement the words in this manual to best explain how to enjoy your vehicle. By reading your manual, you will learn about features, important safety information, and driving tips under various road conditions.

The general layout of the manual is provided in the Table of Contents. Use the index when looking for a specific area or subject; it has an alphabetical listing of all information in your manual.

Sections: This manual has nine sections plus an index. Each section begins with a brief list of contents so you can tell at a glance if that section has the information you want.

You will find various WARNINGs, CAUTIONs, and NOTICEs in this manual. These WARNINGs were prepared to enhance your personal safety. You should carefully read and follow ALL procedures and recommendations provided in these WARNINGs, CAUTIONs and NOTICEs.

⚠ WARNING

A WARNING indicates a situation in which harm, serious bodily injury or death could result if the warning is ignored.

⚠ CAUTION

A CAUTION indicates a situation in which damage to your vehicle could result if the caution is ignored.

✻ NOTICE

A NOTICE indicates interesting or helpful information is being provided.

FUEL REQUIREMENTS

Your new vehicle is designed to use only unleaded fuel having a pump octane number ((R+M)/2) of 87 (Research Octane Number 91) or higher. (Do not use methanol blended fuels.)

Your new vehicle is designed to obtain maximum performance with UNLEADED FUEL, as well as minimize exhaust emissions and spark plug fouling.

Never add any fuel system cleaning agents to the fuel tank other than what has been specified. (Consult an authorized Kia dealer for details.)

- Tighten the cap until it clicks one time, otherwise the Check Engine light will illuminate.

⚠ WARNING - Refueling

- **Do not "top off" after the nozzle automatically shuts off. Attempts to force more fuel into the tank can cause fuel overflow onto you and the ground, causing a risk of fire.**
- **Always check that the fuel cap is installed securely to prevent fuel spillage, especially in the event of an accident.**

Gasoline containing alcohol and methanol

Gasohol, a mixture of gasoline and ethanol (also known as grain alcohol), and gasoline or gasohol containing methanol (also known as wood alcohol) are being marketed along with or instead of leaded or unleaded gasoline.

Do not use gasohol containing more than 15 percent ethanol, and do not use gasoline or gasohol containing any methanol.

Either of these fuels may cause drivability problems and damage to the fuel system, engine control system and emission control system.

Discontinue using gasohol of any kind if drivability problems occur.

Vehicle damage or drivability problems may not be covered by the manufacturer's warranty if they result from the use of:

1. Gasoline or gasohol containing methanol.
2. Leaded fuel or leaded gasohol.
3. Gasohol containing more than 15 percent ethanol.

"E85" fuel is an alternative fuel comprised of 85 percent ethanol and 15 percent gasoline, and is manufactured exclusively for use in Flexible Fuel Vehicles. “E85” is not compatible with your vehicle. Use of “E85” may result in poor engine performance and damage to your vehicle's engine and fuel system. Kia recommends that customers do not use fuel with an ethanol content exceeding 15 percent.

✻ NOTICE

Your New Vehicle Limited Warranty does not cover damage to the fuel system or any performance problems caused by the use of “E85” fuel.

✻ NOTICE

Never use any fuel containing methanol. Discontinue use of any methanol containing product which may inhibit proper drivability.

Other fuels

Using fuels that contain Silicone (Si), MMT (Manganese, Mn), Ferrocene (Fe), and other metalic additives, may cause vehicle and engine damage or cause misfiring, poor acceleration, engine stalling, catalyst melting, clogging, abnormal corrosion, life cycle reduction, etc.

Also, the Malfunction Indicator Lamp (MIL) may illuminate.

✻ NOTICE

Damage to the fuel system or performance problem caused by the use of these fuels may not be covered by your New Vehicle Limited Warranty.

Use of MTBE

Kia recommends avoiding fuels containing MTBE (Methyl Tertiary Butyl Ether) over 15.0% vol. (Oxygen Content 2.7% weight) in your vehicle.

Fuel containing MTBE over 15.0% vol. (Oxygen Content 2.7% weight) may reduce vehicle performance and produce vapor lock or hard starting.

✻ NOTICE

Your New Vehicle Limited Warranty may not cover damage to the fuel system and any performance problems that are caused by the use of fuels containing methanol or fuels containing MTBE (Methyl Tertiary Butyl Ether) over 15.0% vol. (Oxygen Content 2.7% weight.)

Gasoline containing MMT

Some gasoline contains harmful manganese-based fuel additives such as MMT(Methylcyclopentadienyl Manganese Tricarbonyl). Kia does not recommend the use of gasoline containing MMT. This type of fuel can reduce vehicle performance and affect your emission control system. The Malfunction Indicator Lamp on the cluster may come on.

Do not use methanol

Fuels containing methanol (wood alcohol) should not be used in your vehicle. This type of fuel can reduce vehicle performance and damage components of the fuel system, engine control system and emission control system.

Fuel Additives

Kia recommends that you use good quality gasolines treated with detergent additives such as TOP TIER Detergent Gasoline, which help prevent deposit formation in the engine. These gasolines will help the engine run cleaner and enhance performance of the Emission Control System. For more information on TOP TIER Detergent Gasoline, please go to the website (www.toptiergas.com)

For customers who do not use TOP TIER Detergent Gasoline regularly, and have problems starting or the engine does not run smoothly, additives that can be purchased separately may be added to the gasoline.

If TOP TIER Detergent Gasoline is not available, one bottle of additive should be added to the fuel tank at every 12,000 km (7,500 miles) or every engine oil change. Additives are available from your authorized Kia dealer along with information on how to use them. Do not mix other additives.

Operation in foreign countries

If you are going to drive your vehicle in another country, be sure to:

- Observe all regulations regarding registration and insurance.
- Determine that acceptable fuel is available.

VEHICLE MODIFICATIONS

This vehicle should not be modified. Modification of your vehicle could affect its performance, safety or durability and may even violate governmental safety and emissions regulations.

In addition, damage or performance problems resulting from any modification may not be covered under warranty.

- If you use unauthorized electronic devices, it may cause the vehicle to operate abnormally, damage wiring, discharge the battery, and cause fire.

VEHICLE BREAK-IN PROCESS

No special break-in period is needed. By following a few simple precautions for the first 1,000 km (600 miles) you may add to the performance, economy and life of your vehicle.

- Do not race the engine.
- While driving, keep your engine speed (rpm, or revolutions per minute) between 2,000 rpm and 4,000 rpm.
- Do not maintain a single speed for long periods of time, either fast or slow. Varying engine speed is needed to properly break-in the engine.
- Avoid hard stops, except in emergencies, to allow the brakes to seat properly.

VEHICLE DATA COLLECTION AND EVENT DATA RECORDERS

This vehicle is equipped with an event data recorder (EDR). The main purpose of an EDR is to record, in certain crash or near crash-like situations, such as an air bag deployment or hitting a road obstacle, data that will assist in understanding how a vehicle's systems performed. The EDR is designed to record data related to vehicle dynamics and safety systems for a short period of time, typically 30 seconds or less. The EDR in this vehicle is designed to record such data as:

- **How various systems in your vehicle were operating;**
- **Whether or not the driver and passenger safety belts were buckled/ fastened;**
- **How far (if at all) the driver was depressing the accelerator and/or brake pedal; and,**
- **How fast the vehicle was traveling.**

This data can help provide a better understanding of the circumstances in which crashes and injuries occur. NOTE: EDR data is recorded by your vehicle only if a non-trivial crash situation occurs; no data is recorded by the EDR under normal driving conditions and no personal data (e.g., name, gender, age, and crash location) are recorded. However, other parties, such as law enforcement, could combine the EDR data with the type of personally identifying data routinely acquired during a crash investigation.

To read data recorded by an EDR, special equipment is required, and access to the vehicle or the EDR is needed. In addition to the vehicle manufacturer, other parties, such as law enforcement, that have the special equipment, can read the information if they have access to the vehicle or the EDR.

Your vehicle at a glance

Exterior overview 2-2
Interior overview 2-4
Instrument panel overview 2-5
Engine compartment 2-6

EXTERIOR OVERVIEW

■ Front view

1. Hood 4-35
2. Head lamp (Features of your vehicle) ..4-100
   Head lamp (Maintenance).....7-79
3. DRL lamp (Features of your vehicle) ..4-100
   DRL lamp (Maintenance) 7-79
4. Front turn signal lamp (Maintenance) ...7-79
5. Wheel and tire 7-46
6. Outside rearview mirror.....4-52
7. Sunroof.....4-41
8. Front windshield wiper blades
   (Features of your vehicle).....4-108
   Front windshield wiper blades
   (Maintenance) 7-39
9. Windows 4-30
10. Front fog lamp
    (Features of your vehicle).....4-107
    Front fog lamp (Maintenance) 7-79

❊ The actual shape may differ from the illustration.

OBDM018001N

■ Rear view

1. Door locks 4-19
2. Fuel filler lid 4-38
3. Rear combination lamp (Maintenance) 7-80
4. High mounted stop lamp (Maintenance) 7-81
5. Trunk.....4-24
6. Antenna 4-155
7. Rear view monitor 4-99
8. Reverse parking distance warning 4-96
9. Rear turn signal lamp (Maintenance)....7-80
10. Back Up lamp (Maintenance).....7-80

❊ The actual shape may differ from the illustration.

OBDM018002

INTERIOR OVERVIEW

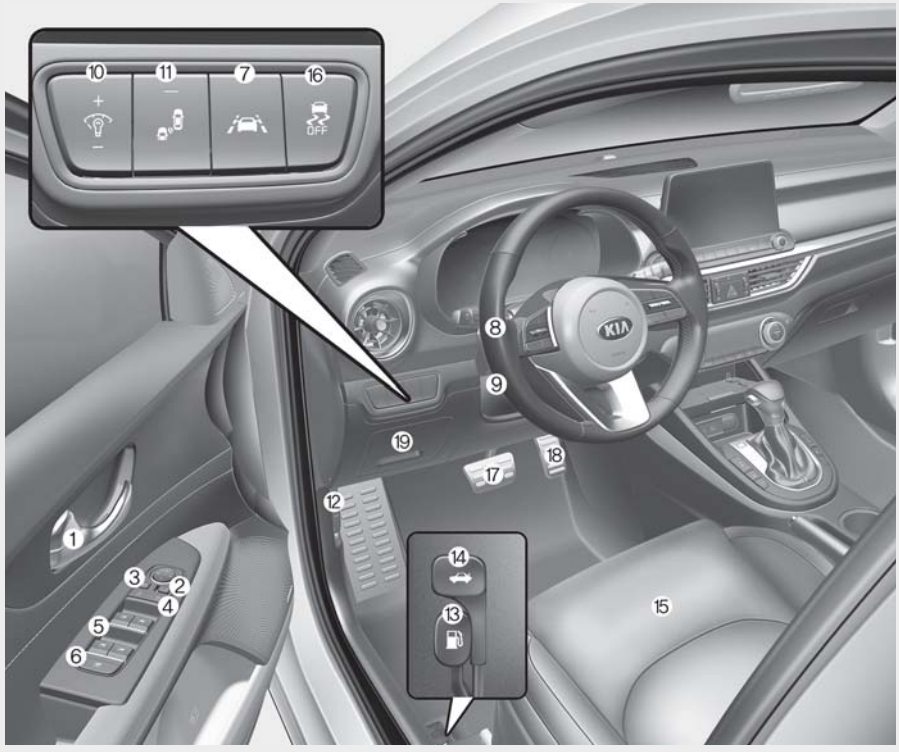

1. Inside door handle 4-20
2. Outside rearview mirror control 4-53
3. Outside rearview mirror folding.....4-54
4. Central door lock switch.....4-21
5. Power window switch 4-30
6. Power window lock button 4-34
7. Lane Keeping Assist system button..5-126
8. Steering wheel 4-47
9. Tilt and telescopic steering control lever 4-48
10. Instrument panel illumination control 4-57
11. BCW ON/OFF button.....5-116
12. Hood release lever.....4-35
13. Fuel filler lid release lever.....4-38
14. Trunk release lever.....4-24
15. Seat.....3-4
16. ESC OFF button 5-50
17. Brake pedal.....5-44
18. Accelerator pedal
19. Inner fuse panel 7-63

OBDM018003N

INSTRUMENT PANEL OVERVIEW

1. Instrument cluster.....4-56
2. Horn 4-49
3. Driver's front air bag.....3-58
4. Light control/Turn signals 4-100
5. Wiper/Washer.....4-108
6. Ignition switch or
   ENGINE START/STOP button....5-7, 5-11
7. Cruise control system.....5-86
   Smart cruise control system 5-90
8. Drive mode button 5-111
9. Hazard warning flasher switch 6-2
10. Power outlet 4-148
11. Climate control system 4-115, 4-125
12. Shift lever.....5-18, 5-22, 5-35
13. Passenger's front air bag 3-58
14. USB charger.....4-149
15. Glove box 4-142
16. Seat warmer.....4-144
    Seat cooler 4-146
17. Heated steering wheel switch 4-49
18. Center console storage.....4-142

OBDM018004N

ENGINE COMPARTMENT

■ **Nu 2.0L MPI Engine (Gasoline)**

■ **Gamma 1.6L T-GDI Engine (Gasoline)**

1. Engine coolant reservoir.....7-28
2. Engine oil filler cap 7-26
3. Brake/clutch fluid reservoir 7-32
4. Air cleaner 7-35
5. Fuse box.....7-61
6. Negative battery terminal 7-43
7. Positive battery terminal 7-43
8. Engine oil dipstick.....7-26
9. Radiator cap 7-31
10. Windshield washer fluid reservoir....7-33

❈ The actual engine compartment in the vehicle may differ from the illustration.

OBD078101L/OBD078135L

Safety features of your vehicle

Important safety precautions 3-2
- Always wear your seat belt. 3-2
- Restrain all children 3-2
- Air bag hazards 3-2
- Driver distraction 3-2
- Control your speed 3-3
- Keep your vehicle in safe condition 3-3

Seat. 3-4
- Driver’s seat 3-4
- Front passenger’s seat. 3-4
- Rear seat. 3-4
- Front seat adjustment -manual 3-7
- Front seat adjustment - power. 3-8
- Headrest (For front seat) 3-10
- Seatback pocket. 3-13
- Rear seat adjustment 3-13

Seat belts 3-18
- Seat belt restraint system 3-18
- Pre-tensioner seat belt 3-25
- Seat belt precautions. 3-28
- Care of seat belts 3-30

Child Restraint System (CRS) 3-32
- Children Always in the Rear 3-32
- Selecting a Child Restraint System (CRS) 3-33
- Installing a Child Restraint System (CRS). 3-36

Air bag - advanced supplemental restraint system 3-43
- How does the air bag system operate? 3-44
- Air bag warning light 3-46
- SRS components and functions 3-47
- Occupant Detection System (ODS) 3-50
- Driver's and passenger's front air bag 3-58
- Side air bag 3-60
- Curtain air bag 3-62
- SRS Care 3-68
- Adding equipment to or modifying your air bag-equipped vehicle. 3-69
- Air bag warning label 3-69

IMPORTANT SAFETY PRECAUTIONS

You will find many safety precautions and recommendations throughout this section, and throughout this manual. The safety precautions in this section are among the most important.

Always wear your seat belt

A seat belt is your best protection in all types of accidents. Air bags are designed to supplement seat belts, not replace them. So even though your vehicle is equipped with air bags, ALWAYS make sure you and your passengers wear your seat belts, and wear them properly.

Restrain all children

All children under age 13 should ride in your vehicle properly restrained in a rear seat, not the front seat. Infants and small children should be restrained in an appropriate child restraint. Larger children should use a booster seat with the lap/shoulder belt until they can use the seat belt properly without a booster seat.

Air bag hazards

While air bags can save lives, they can also cause serious or fatal injuries to occupants who sit too close to them, or who are not properly restrained. Infants, young children, and shorter adults are at the greatest risk of being injured by an inflating air bag. Follow all instructions and warnings in this manual.

Driver distraction

Driver distraction presents a serious and potentially deadly danger, especially for inexperienced drivers. Safety should be the first concern when behind the wheel and drivers need to be aware of the wide array of potential distractions, such as drowsiness, reaching for objects, eating, personal grooming, other passengers, and using mobile devices.

Drivers can become distracted when they take their eyes and attention off the road or their hands off the wheel to focus on activities other than driving. To reduce your risk of distraction or getting into an accident:

- ALWAYS set up your mobile devices (i.e., MP3 players, phones, navigation units, etc.) when your vehicle is parked or safely stopped.

- ONLY use your mobile device when allowed by laws and when conditions permit safe use. NEVER text or email while driving. Most countries have laws prohibiting drivers from texting. Some states , provinces also prohibit drivers from using handheld phones.
- NEVER let the use of a mobile device distract you from driving. You have a responsibility to your passengers and others on the road to always drive safely, with your hands on the wheel as well as your eyes and attention on the road.

Control your speed

Excessive speed is a major factor in crash injuries and deaths. Generally, the higher the speed, the greater the risk, but serious injuries can also occur at lower speeds. Never drive faster than is safe for current conditions, regardless of the maximum speed posted.

Keep your vehicle in safe condition

Having a tire blowout or a mechanical failure can be extremely hazardous. To reduce the possibility of such problems, check your tire pressures and condition frequently, and perform all regularly scheduled maintenance.

SEAT

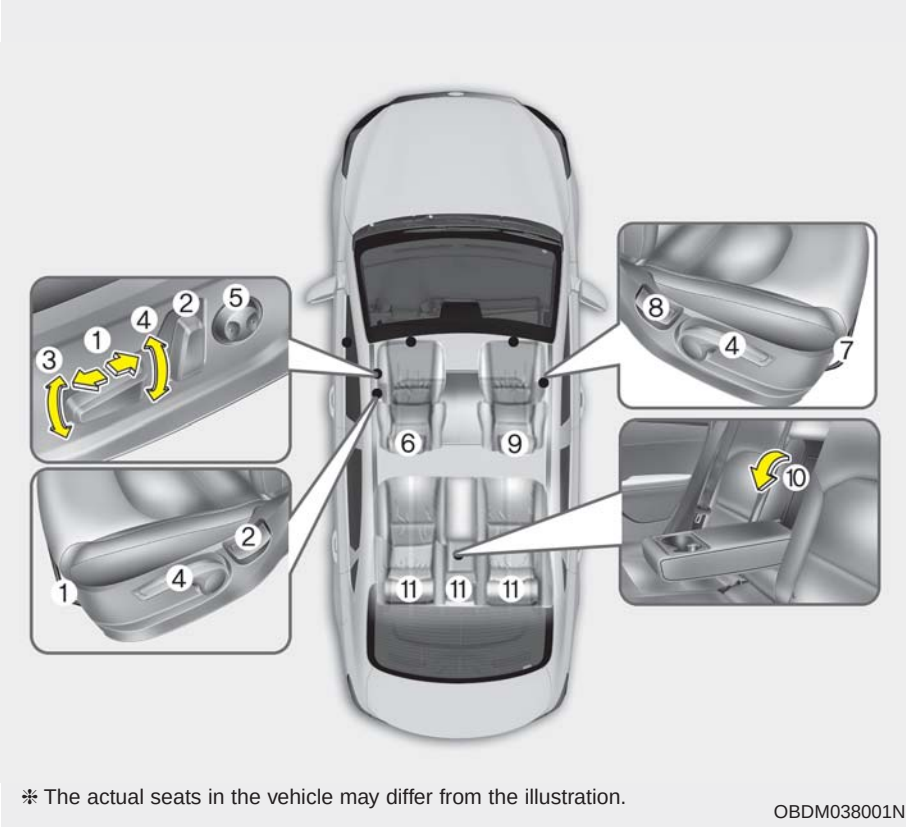

❈ The actual seats in the vehicle may differ from the illustration.

OBDM038001N

Driver's seat

(1) Forward and backward
(2) Seatback angle
(3) Seat cushion tilt
(4) Seat height
(5) Lumbar support*
(6) Headrest

Front passenger's seat

(7) Forward and backward
(8) Seatback angle
(9) Headrest

Rear seat

(10) Armrest
(11) Headrest

* : if equipped

⚠ WARNING - Loose objects

Do not place anything in the driver's foot well or under the front seats. Loose objects in the driver's foot area could interfere with the operation of the foot pedals.

⚠ WARNING - Uprighting seat

Do not press the release lever on a manual seatback without holding and controlling the seatback. The seatback will spring upright, possibly impacting you or other passengers.

⚠ WARNING - Seat cushion

Occupants should never sit on aftermarket seat cushions or sitting cushions. The occupant's hips may slide under the lap portion of the seat belt during an accident or a sudden stop.

⚠ WARNING - Driver responsibility for passengers

The driver must advise the passenger to keep the seatback in an upright position whenever the vehicle is in motion. If a seat is reclined during an accident, the restraint system's ability to restrain will be greatly reduced.

⚠ WARNING - Driver's seat

- **Never attempt to adjust the seat while the vehicle is moving. This could result in loss of control of your vehicle.**
- **Do not allow anything to interfere with the normal position of the seatback and seatback adjustment. Storing items against the seatback could result in serious or fatal injury in a sudden stop or collision.**
- **Sit as far back as possible from the steering wheel while still maintaining comfortable control of your vehicle. A distance of at least 25 cm (10 in.) from your chest to the steering wheel is recommended. Failure to do so could result in air bag inflation injuries to the driver.**

⚠ WARNING - Seat adjustment

- **Do not adjust the seat while wearing seat belts. Moving the seat forward will cause strong pressure on the abdomen.**
- **Do not place your hand near the seat bottom or seat track while adjusting the seat. Your hand could get caught in the seat mechanism.**

⚠ WARNING - Small Objects

Use extreme caution when picking up small objects trapped under the seats or between the seat and the center console. Your hands might be cut or injured by the sharp edges of the seats mechanism.

Feature of Seat Leather

- Leather is made from the outer skin of an animal, which goes through a special process to be available for use. Since it is a natural substance, each part differs in thickness or density.

  Wrinkles may appear as a natural result of stretching and shrinking depending on the temperature and humidity.
- The seat is made of stretchable fabric to improve comfort.
- The parts contacting the body are curved and the side supporting area is high which provides driving comfort and stability.
- Wrinkles may appear naturally from usage. It is not a fault of the product.

⚠ CAUTION

- ***Belts with metallic accessories, zippers or keys inside your back pants pocket may damage the seat fabric.***
- ***Make sure not to wet the seat. It may change the nature of natural leather.***
- ***Jeans or clothes which contain bleach may contaminate the surface of the seat covering fabric and cause damage or discoloration.***

✻ NOTICE

Wrinkles or abrasions which appear naturally from usage are not covered by warranty.

Front seat adjustment -manual

Forward and backward

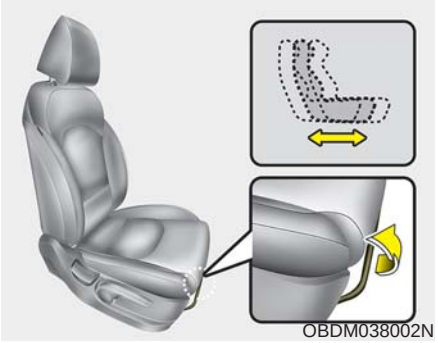

To move the seat forward or backward:

1. Pull the seat slide adjustment lever up and hold it.
2. Slide the seat to the position you desire.
3. Release the lever and make sure the seat is locked in place.

Adjust the seat before driving, and make sure the seat is locked securely by trying to move forward and backward without using the lever. If the seat moves, it is not locked properly.

⚠ WARNING - Unexpected seat movement

After adjusting a manual seat, always check that it is locked by shifting your weight to the front and back. Sudden or unexpected movement of the driver's seat could cause you to lose control of the vehicle.

Seatback angle

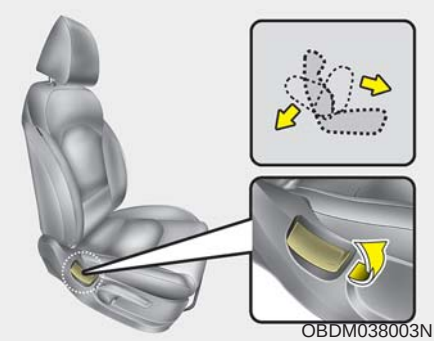

To recline the seatback:

1. Lean forward slightly and lift up the seatback recline lever.
2. Carefully lean back on the seat and adjust the seatback of the seat to the position you desire.
3. Release the lever and make sure the seatback is locked in place. (The lever MUST return to its original position for the seatback to lock.)

Seat Cushion height (if equipped, for driver's seat)

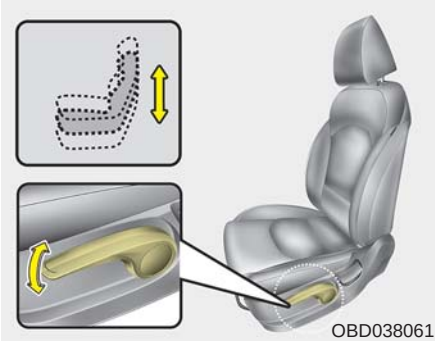

To change the height of the seat cushion, push the lever upwards or downwards.

- To lower the seat cushion, push the lever down several times until the seat reaches the desired position.
- To raise the seat cushion, push the lever up several times until the seat reaches the desired position.

Front seat adjustment - power (if equipped)

The front seat can be adjusted by using the control switch located on the outside of the seat cushion. Before driving, adjust the seat to the proper position so as to easily control the steering wheel, pedals and switches on the instrument panel.

⚠ WARNING - Unattended children

Do not leave children unattended in the vehicle. Children might operate features of the vehicle that could injure them.

⚠ CAUTION - Power seat adjustments

The power seating controls function by electronic motor.

Excessive operation may cause damage to the electrical equipment.

⚠ CAUTION - Power Seating

Do not operate two or more power seat control switches at the same time. Doing so may damage the power seat motor or electrical components.

When in operation, the power seat-consumes a large amount of electrical power. To prevent unnecessary charging system drain, don't adjust the power seat longer than necessary while the engine is not running.

Forward and backward

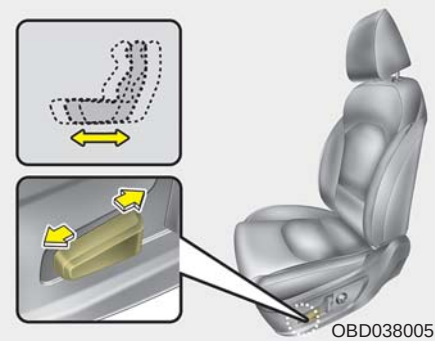

Push the control switch forward or backward to move the seat to the desired position. Release the switch once the seat reaches the desired position.

Seatback angle

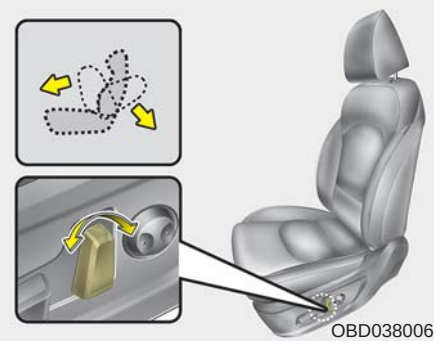

Push the control switch forward or backward to move the seatback to the desired angle. Release the switch once the seat reaches the desired position.

Seat cushion tilt and height

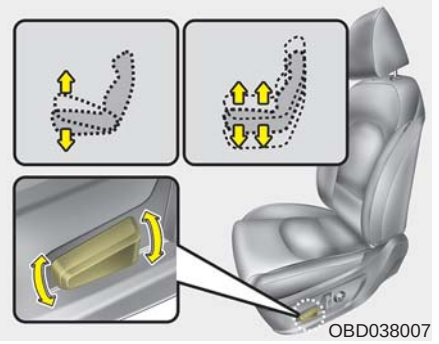

Seat cushion tilt

- Pull the front portion of the control switch up to raise or press down to lower the front part of the seat.

Seat height

- Pull the rear portion of the control switch up to raise or press down to lower the seat cushion. Release the switch once the seat reaches the desired position.

Lumbar support (for driver's seat, if equipped)

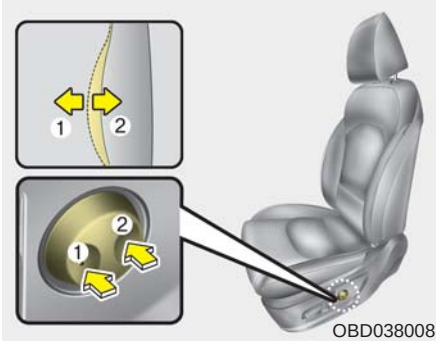

OBD038008

The lumbar support can be adjusted by pressing the lumbar support switch on the side of the driver's seat. Press the front portion of the switch to increase support, or the rear portion of the switch to decrease support.

Headrest (for front seat)

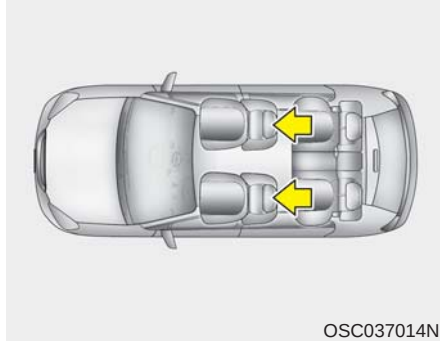
OSC037014N

The driver's and front passenger's seats are equipped with a headrest for the occupant's safety and comfort.

The headrest not only provides comfort for the driver and front passenger, but also helps protect the head and neck in the event of a collision.

For maximum effectiveness in case of an accident, the headrest should be adjusted so the middle of the headrest is at the same height of the center of gravity of an occupant's head. Generally, the center of gravity of most people's head is similar with the height of the top of their eyes. Also, adjust the headrest as close to your head as possible.

For this reason, the use of a cushion that holds the body away from the seatback is not recommended.

⚠ WARNING - Headrest removal/adjustment

- **Do not operate the vehicle with the headrests removed. Headrests can provide critical neck and head support in a crash.**
- **Do not adjust the headrest height while the vehicle is in motion. Driver may lose control of the vehicle.**

⚠ CAUTION

Excessive pulling or pushing may damage the headrest.

Adjusting the height up and down

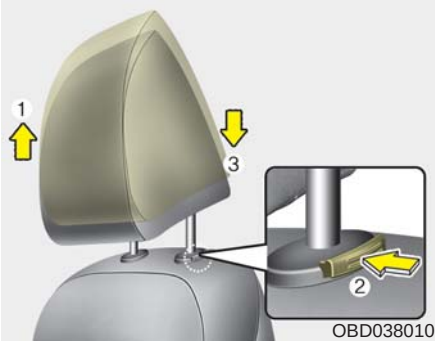

To raise the headrest, pull it up to the desired position (1). To lower the headrest, push and hold the release button (2) on the headrest support and lower the headrest to the desired position (3).

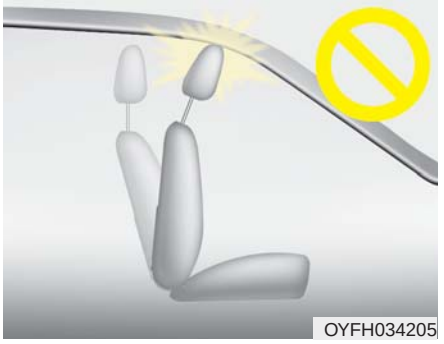

✻ NOTICE

If you recline the seatback towards the front with the headrest and seat cushion raised, the headrest may come in contact with the sunvisor or other parts of the vehicle.

Removal and installation

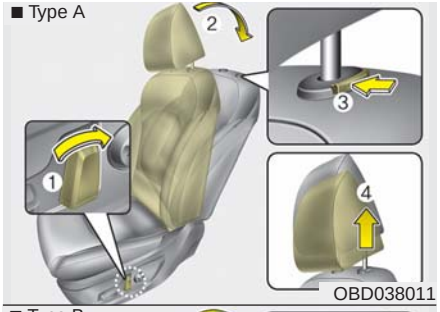

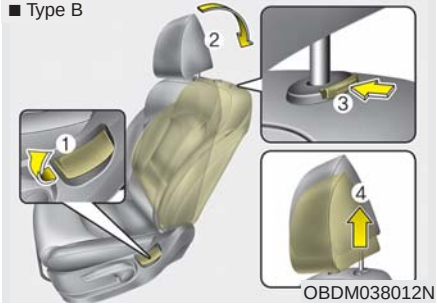

To remove the headrest:

1. Recline the seatback (2) with the recline lever or switch (1).
2. Raise headrest as far as it can go.
3. Press the headrest release button (3) while pulling the headrest up (4).

⚠ WARNING - Headrest Removal

NEVER allow anyone to ride in a seat with the headrest removed. Headrests can provide critical neck and head support in a crash.

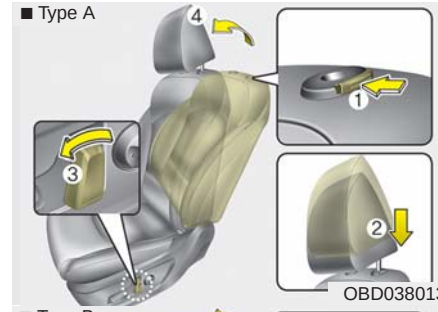

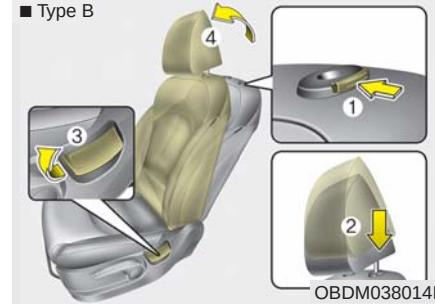

To reinstall the headrest :

1. Put the headrest poles (2) into the holes while pressing the release button or switch (1).
2. Recline the seatback (4) with the lever or switch (3).

3. Adjust the headrest to the appropriate height.

⚠ WARNING - Headrest Reinstallation

To reduce the risk of injury to the head or neck, always make sure the head rest is locked into position and adjusted properly after reinstalling.

Seatback pocket

OBD038015

The seatback pocket is provided on the back of the front passenger's seatback.

⚠ WARNING - Seatback pocket

Do not put heavy or sharp objects in the seatback pocket. An occupant could contact such objects in a crash. Heavy objects in the front passenger seatback could also interfere with the air bag sensing system.

Rear seat adjustment

Headrest (for rear seat)

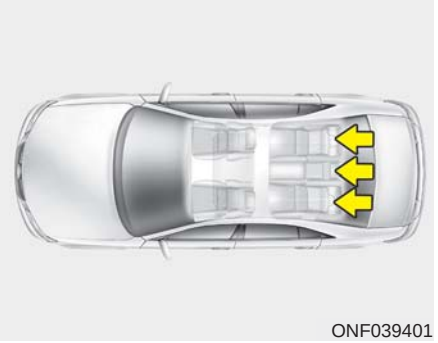
ONF039401

The rear seat is equipped with headrests for the occupant's safety and comfort.

The headrest not only provides comfort for passengers, but also helps protect the head and neck in the event of a collision.

For maximum effectiveness in case of an accident, the headrest should be adjusted so the middle of the headrest is at the same height of the center of gravity of an occupant's head. Generally, the center of gravity of most people's head is similar with the height as the top of their eyes.

Also adjust the headrest as close to your head as possible. For this reason, the use of a cushion that holds the body away from the seatback is not recommended.

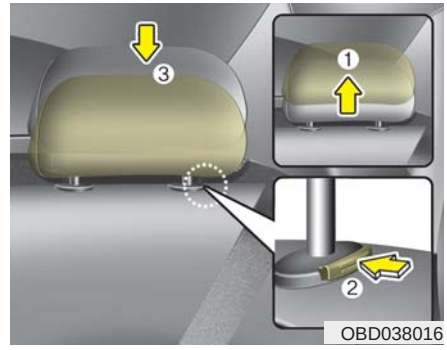

Adjusting the height up and down (if equipped)

To raise the headrest, pull it up to the desired position (1). To lower the headrest, push and hold the release button (2) on the headrest support and lower the headrest to the desired position (3).

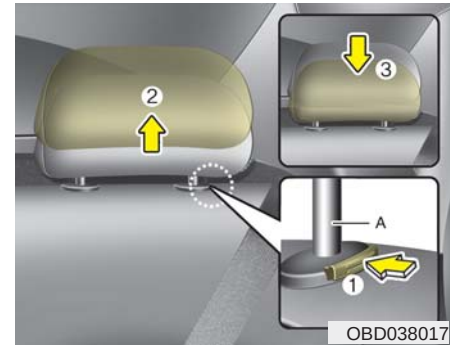

Removal and installation

To remove the headrest, raise it as far as it can go then press the release button (1) while pulling the headrest upward (2).

To reinstall the headrest, put the headrest poles (3) into the holes while pressing the release button (1). Then adjust it to the appropriate height and ensure that it locks in position.

Armrest (if equipped)

To use the armrest, pull it forward from the seatback.

Folding the rear seat (if equipped)

The rear seatbacks may be folded to facilitate carrying long items or to increase the luggage capacity of the vehicle.

⚠ WARNING - Folded Seatback

Never allow passengers to sit on top of the folded down seatback while the vehicle is moving. This is not a proper seating position and no seat belts are available for use. This could result in serious injury or death in case of an accident or sudden stop.

⚠ WARNING - Objects

Objects carried on the folded down seatback should not extend higher than the top of the front seatbacks. This could allow cargo to slide forward and cause injury or damage during sudden stops.

To fold down the rear seatback:

1. Set the front seatback to the upright position and if necessary, slide the front seat forward.
2. Lower the rear headrests to the lowest position.

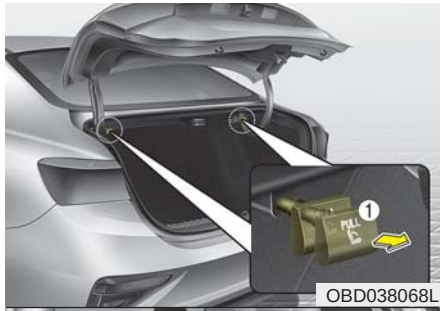

OBD038068L

OBD038063L

3. Pull out the seatback locking knob(1) in the trunk, then fold the seat toward the front of the vehicle.
4. To use the rear seat, lift and pull the seatback backward. Pull the seatback firmly until it clicks into place. Make sure the seatback is locked in place.
5. Return the rear seat belt to the proper position.

⚠ CAUTION

Be careful when loading cargo through the rear passenger seats to prevent damage to the vehicle interior.

⚠ WARNING

Unless the driver's position is properly set according to the driver's physical figure, do not fold the rear seat. It may increase bodily injuries in a sudden stop or collision.

⚠ WARNING - Rear seat belts

When returning the rear setbacks to the upright position, remember to return the rear shoulder belts to their proper position.

⚠ WARNING - Rear seatback

When returning the rear seatback from a folded to an upright position, hold the seatback and return it slowly. Ensure that the seatback is completely locked into its upright position by pushing on the top of the seatback. In an accident or sudden stop, the unlocked seatback could allow cargo to move forward with great force and enter the passenger compartment.

⚠ WARNING - Cargo

Do not place heavy objects in the rear seats, since they cannot be properly secured and may hit vehicle occupants in a frontal collision.

⚠ WARNING - Objects

Objects carried on the folded down seatback should not extend higher than the top of the front seatbacks. This could allow cargo to slide forward and cause injury or damage during sudden stops.

SEAT BELTS

Seat belt restraint system

Seat belts are designed to bear upon the bony structure of the body, and should be worn low across the front of the pelvis, chest and shoulders, as applicable; wearing the lap section of the belt across the abdominal area must be avoided.

Seat belts should be adjusted as firmly as possible, consistent with comfort, to provide the protection for which they have been designed.

A slack belt will greatly reduce the protection afforded to the wearer.

Care should be taken to avoid contamination of the webbing with polishes, oils and chemicals, and particularly battery acid. Cleaning may safely be carried out using mild soap and water. The belt should be replaced if webbing becomes frayed, contaminated or damaged.

- For maximum restraint system protection, the seat belts must always be used whenever the vehicle is moving. A properly positioned shoulder belt should be positioned midway over your shoulder across your collarbone.
- Never allow children to ride in the front passenger seat. See child restraint system section for further discussion.

⚠ WARNING - Shoulder belt

Never wear the shoulder belt under your arm or behind your back. An improperly positioned shoulder belt cannot protect the occupant in a crash.

Always wear both the shoulder portion and the lap portion of the seat belt.

- No modifications or additions should be made by the user which would either prevent the seat belt adjusting devices from operating to remove slack, or prevent the seat belt assembly from being adjusted to remove slack.
- When you fasten the seat belt, be careful not to latch the seat belt in buckles of other seats. It's very dangerous and you may not be protected by the seat belt properly.
- Do not unfasten the seat belt and do not fasten and unfasten the seat belt repeatedly while driving. This could result in loss of control, and an accident causing death, serious injury, or property damage.
- When fastening the seat belt, make sure that the seat belt does not pass over objects that are hard or can break easily.

⚠ WARNING - Damaged seat belt

Replace the entire seat belt assembly if any part of the webbing or hardware is damaged as you can no longer be sure that a damaged seat belt will provide protection in a crash.

⚠ WARNING - Twisted seat belt

Make sure your seat belt is not twisted when worn. A twisted seat belt may not properly protect you in an accident and could even cut into your body.

⚠ WARNING - Seat belt buckle

Do not allow foreign material (gum, crumbs, coins, etc.) to obstruct the seat belt buckle. This may prevent the seat belt from fastening securely.

Driver seat belt warning

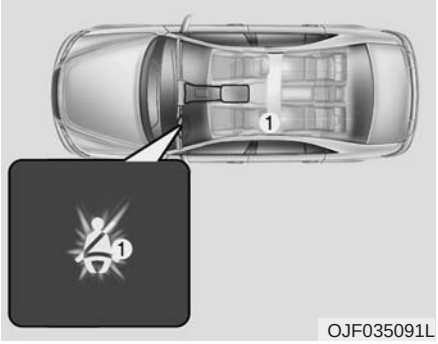

OJF035091L

If a driver turns the ignition switch ON or the engine starts with the seat belt unfastened, the seat belt warning light will stay on until the driver fastens the seat belt and the warning sound will continue for 6 seconds. If a driver turns the ignition switch ON or the engine starts with seatbelt fastened, the warning light will stay for 6 seconds and the warning sound will not be heard.

At a driving speed below 20 km/h (12 mph) with the driver's seatbelt unfastened, the warning light will stay on. At a driving speed of 20 km/h (12 mph) and above with the seatbelt unfastened, the warning light will blink and the warning sound will continue for 100 seconds.

If a driver unfastens the seatbelt while driving at a speed below 20 km/h (12 mph), the warning light will stay on; for a driving speed of 20 km/h (12 mph) and above, the warning light will blink and the warning sound will continue for 100 seconds.

Front passenger seat belt warning

OBD038020

When the ignition switch is ON or the engine starts with the front passenger seat belt unfastened, the warning light will stay on until the belt is fastened. When the ignition switch is ON or the engine starts with the front passenger seat belt fastened, the warning light will stay for about 6 seconds.

If the passenger seat belt is unfastened during driving, the warning light will illuminate if the speed is under 20 km/h (12 mph). When the speed is 20 km/h (12 mph) and faster, the warning light will blink and the warning chime will sound for approximately 100 seconds.

✻ NOTICE

- **Even if the front passenger seat is not occupied, the seat belt warning light will illuminate for 6 seconds.**
- **The front passenger's seat belt warning may operate when luggage is placed on the front passenger seat.**

Seat belt - Driver's 3-point system with emergency locking retractor

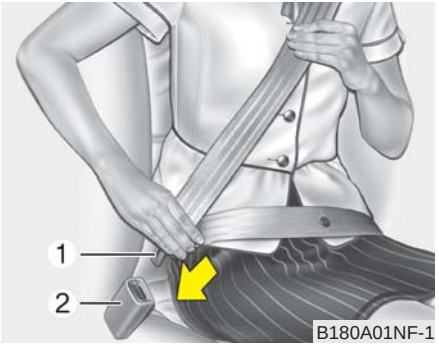

To fasten your seat belt:

To fasten your seat belt, pull it out of the retractor and insert the metal tab (1) into the buckle (2). There will be an audible "click" when the tab locks into the buckle.

The seat belt automatically adjusts to the proper length only after the lap belt portion is adjusted manually so that it fits snugly around your hips. If you lean forward in a slow, easy motion, the belt will extend and let you move around. If there is a sudden stop or impact, however, the belt will lock into position. It will also lock if you try to lean forward too quickly.

If you are unable to pull out the seat belt from the retractor, firmly pull the belt out and release it. Then you will be able to pull the belt out smoothly.

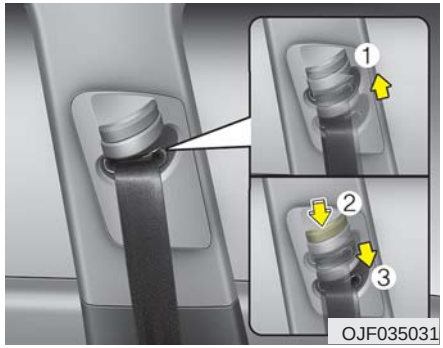

Height adjustment

You can adjust the height of the shoulder belt anchor to one of the 3 positions for maximum comfort and safety.

The height of the adjusting seat belt should not be too close to your neck. The shoulder portion should be adjusted so that it lies across your chest and midway over your shoulder nearest the door and not your neck.

To adjust the height of the seat belt anchor, lower or raise the height adjuster into an appropriate position.

To raise the height adjuster, pull it up (1). To lower it, push it down (3) while pressing the height adjuster button (2).

Release the button to lock the anchor into position. Try sliding the height adjuster to make sure that it has locked into position. Never position the shoulder belt across your neck or face.

Improperly positioned seat belts can cause serious injuries in an accident.

⚠ WARNING - Seat belt replacement

Replace your seat belts after being in an accident. Failure to replace seat belts after an accident could leave you with damaged seat belts that will not provide protection in the event of another collision.

⚠ WARNING - Shoulder belt positioning

Never position the shoulder belt across your neck or face.

⚠ WARNING

You should place the lap belt portion as low as possible and snugly across your hips. If the lap belt is located too high on your waist, it may increase the chance of injury in the event of a collision.

The arm closest to the seat belt buckle should be over the belt while the other arm should be under the belt as shown in the illustration. Never wear the seat belt under the arm closest to the door.

Seat belts - Front passenger and rear seat 3-point system with combination locking retractor

To fasten your seat belt

Combination retractor type seat belts are installed in the rear seat positions to help accommodate the installation of child restraint systems. Although a combination retractor is also installed in the front passenger seat position, it is strongly recommended that children always be seated in the rear seat. NEVER place an infant restraint system in the front seat of the vehicle.

This type of seat belt combines the features of both an emergency locking retractor seat belt and an automatic locking retractor seat belt. To fasten your seat belt, pull it out of the retractor and insert the metal tab into the buckle. There will be an audible "click" when the tab locks into the buckle. When not securing a child restraint, the seat belt operates in the same way as the driver's seat belt (Emergency Locking Retractor Type).

It automatically adjusts to the proper length only after the lap belt portion of the seat belt is adjusted manually so that it fits snugly around your hips.

When the seat belt is fully extended from the retractor to allow the installation of a child restraint system, the seat belt operation changes to allow the belt to retract, but not to extend (Automatic Locking Retractor Type). Refer to “Using a child restraint system” in this section.

To convert from the automatic locking feature to the emergency locking operation mode, allow the unbuckled seat belt to fully retract.

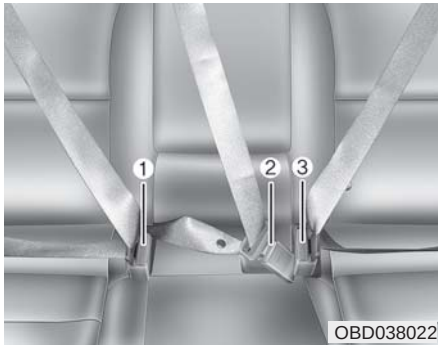

The seat belt should be locked into the buckle on each seat cushion to be properly fastened.

❊① : Rear right seat belt fastening buckle

② : Rear center seat belt fastening buckle

③ : Rear left seat belt fastening buckle

When using the rear center seat belt, the buckle with the “CENTER” mark must be used.

⚠ CAUTION

Do not force to lock the left or right seat belt into the center seat belt buckle.

Make sure to lock the rear center seat belt into the center seat belt buckle.

If not, the improperly fastened seat belt will not be able to provide protection.

⚠ WARNING

Be sure you are using the correct latch for the center seat belt buckle. Forcing the left or right seat belt latch into the center buckle can create the appearance of a secure seat belt when in fact the passenger is not properly fastened in the seat belt.

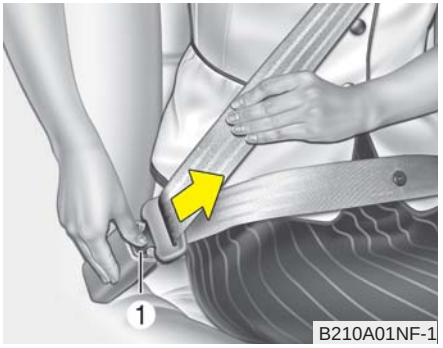

To release the seat belt

The seat belt is released by pressing the release button (1) of the locking buckle. When it is released, the belt should automatically draw back into the retractor.

If this does not happen, check the belt to be sure it is not twisted, then try again.

Pre-tensioner seat belt

Your vehicle is equipped with driver's and front passenger's pre-tensioner seat belts.

1. Retractor pre-tensioner

The retractor pre-tensioner is a supplemental system of the seat belts. The purpose of the retractor pre-tensioner is to tighten the shoulder belt against the occupant's upper body in certain frontal collisions.

The pre-tensioner seat belts may be activated, when a collision is severe enough, together with the air bags.

When the vehicle stops suddenly, or if the occupant tries to lean forward too quickly, the seat belt retractor may lock into position. In certain frontal collisions (or side collisions), the pre-tensioner may activate and pull the seat belt into tighter contact against the occupant's body.

If the system senses excessive tension on the driver seat belt when the pre-tensioner activates, the load limiter inside the retractor pre-tensioner will release some of the pressure on the affected seat belt.

2. Emergency Fastening Device (EFD, for driver seat)

The Emergency Fastening Device (EFD) is a supplemental system of the seat belts. The purpose of the EFD is to tighten the lap belt against the occupant's pelvis in certain collisions.

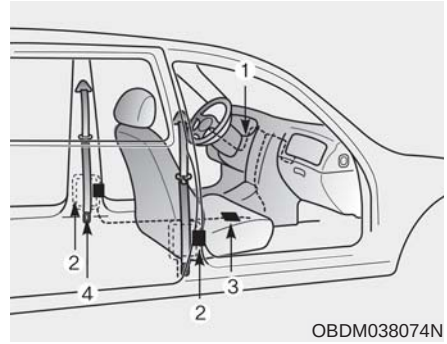

The seat belt pre-tensioner system consists mainly of the following components. Their locations are shown in the illustration:

1. SRS air bag warning light
2. Retractor pre-tensioner assembly
3. SRS control module
4. Emergency fastening device (EFD)

To obtain maximum benefit from a pre-tensioner seat belt:

1. The seat belt must be worn correctly and adjusted to the proper position. Please read and follow all of the important information and precautions about your vehicle's occupant safety features - including seat belts and air bags - that are provided in this manual.
2. Be sure you and your passengers always wear seat belts properly.

✻ NOTICE

When the pre-tensioner seat belts are activated, a loud noise may be heard and fine dust, which may appear to be smoke, may be visible in the passenger compartment. These are normal operating conditions and are not hazardous.

⚠ WARNING - Skin irritation

Wash all exposed skin areas thoroughly after an accident in which the pre-tensioner seat belts were activated. The fine dust from the pre-tensioner activation may cause skin irritation and should not be breathed for prolonged periods.

Because the sensor that activates the SRS air bag is connected with the pre-tensioner seat belt, the SRS air bag warning light ( ) on the instrument panel will illuminate for approximately 6 seconds after the ignition switch has been turned to the ON position, and then it should turn off. If the pre-tensioner seat belt does not work properly, this warning light will illuminate even if the SRS air bag has not malfunctioned.

If the SRS air bag warning light does not illuminate when the ignition switch is turned ON, or if it remains illuminated after illuminating for approximately 6 seconds, or if it illuminates while the vehicle is being driven, please have an authorized Kia dealer inspect the pre-tensioner seat belt or SRS air bag system as soon as possible.

✻ NOTICE

Do not attempt to service or repair the pre-tensioner seat belt system in any manner. Do not attempt to inspect or replace the pre-tensioner seat belts yourself. This must be done by an authorized Kia dealer.

⚠ WARNING - Hot pretensioner

Do not touch the pre-tensioner seat belt assemblies for several minutes after they have been activated. When the pre-tensioner seat belt mechanism fires during a collision the pre-tensioner becomes hot and can burn you.

Pre-tensioners are designed to operate only one time. After activation, pre-tensioner seat belts must be replaced. If the pre-tensioner must be replaced, contact an authorized Kia dealer.

Seat belt precautions

Infant or small child

Most countries have child restraint laws. You should be aware of the specific requirements in your country. Child and/or infant seats must be properly placed and installed in the rear seat. For more information about the use of these restraints, refer to “Child restraint system” in this section.

✻ NOTICE

Small children are best protected from injury in an accident when properly restrained in the rear seat by a child restraint system that meets the requirements of the Safety Standards of your country. Before buying any child restraint system, make sure that it has a label certifying that it meets Safety Standards of your country. The restraint must be appropriate for your child's height and weight.

Check the label on the child restraint for this information. Refer to “Child restraint system” in this section.

Larger children

Children who are too large for child restraint systems should always occupy the rear seat and use the available lap/shoulder belts. The lap portion should be fastened snug on the hips and as low as possible. Periodically check belt fit. A child's squirming could put the belt out of position. Children are most safe in the event of an accident when they are restrained by a proper restraint system in the rear seat. If a larger child (over age 12) must be seated in the front seat, the child should be securely restrained by the available lap/shoulder belt and the seat should be placed in the rearmost position. Children age 12 and under should be restrained securely in the rear seat. NEVER place a child age 12 and under in the front seat. NEVER place a rear facing child seat in the front seat of a vehicle.

If the shoulder belt portion slightly touches the child’s neck, or face, try placing the child closer to the center of the vehicle. If the shoulder belt still touches their face or neck they need to be returned to a child restraint system.

⚠ WARNING - Small children

Do not allow small children to ride in the vehicle without an appropriate child restraint system. If the shoulder belt comes in contact with your child's neck or face, your child is too small to ride in the vehicle. In a crash, the seat belt may inflict injury to your child's neck, throat and face.

Restraint of pregnant women

Pregnant women should wear lap/shoulder belt assemblies whenever possible according to specific recommendations by their doctors. The lap portion of the belt should be worn AS SNUGLY AND LOW AS POSSIBLE on the hips, not across the abdomen.

⚠ WARNING - Pregnant women

Pregnant women must never place the lap portion of the seat belt above or on the abdomen where the fetus is located. The force of the seat belt during a collision will crush the fetus.

Injured person

A seat belt should be used when an injured person is being transported. When this is necessary, you should consult a physician for recommendations.

One person per belt

Two people (including children) should never attempt to use a single seat belt. This could increase the severity of injuries in case of an accident.

Do not lie down

To reduce the chance of injuries in the event of an accident and to achieve maximum effectiveness of the restraint system, all passengers should be sitting up and the front seats should be in an upright position when the vehicle is moving. A seat belt cannot provide proper protection if the person is lying down in the rear seat or if the front seat is in a reclined position.

Care of seat belts

Seat belt systems should never be disassembled or modified. In addition, care should be taken to assure that seat belts and belt hardware are not damaged by seat hinges, doors or other abuse.

Periodic inspection

All seat belts should be inspected periodically for wear or damage of any kind. Any damaged parts should be replaced as soon as possible.

Keep belts clean and dry

Seat belts should be kept clean and dry. If belts become dirty, they can be cleaned by using a mild soap solution and warm water. Bleach, dye, strong detergents or abrasives should not be used because they may damage and weaken the fabric.

When to replace seat belts

The entire in-use seat belt assembly or assemblies should be replaced if the vehicle has been involved in an accident. This should be done even if no damage is visible. Additional questions concerning seat belt operation should be directed to an authorized Kia dealer.

⚠ WARNING - Pinched Seat belts

Make sure that the webbing and/or buckle does not get caught or pinched in the rear seat when returning the rear seatback to its upright position. A caught or pinched webbing/buckle may become damaged and could fail during a collision or sudden stop.

⚠ WARNING

Seatbelts can become hot in a vehicle that has been closed up in sunny weather. They could burn occupants, including infants and children.

CHILD RESTRAINT SYSTEM (CRS)

Children Always in the Rear

⚠ WARNING - Restraint Location

Never install a child or infant seat on the front passenger's seat. A child riding in the front passenger seat can be forcefully struck by an inflating airbag and seriously injured.

⚠ WARNING - Hot Child Restraint

A child restraint system can become very hot if it is left in a closed vehicle on a sunny day. Be sure to check the seat cover, buckles and latches before placing a child in the restraint system.

Children under age 13 must always ride in the rear seats and must always be properly restrained to minimize the risk of injury in an accident, sudden stop or sudden maneuver. According to accident statistics, children are more safe when properly restrained in the rear seats than in the front seat. Even with air bags, children can be seriously injured or killed. Children too large for a child restraint must use the seat belts provided.

Most countries have child restraint laws which require children to travel in approved child restraint devices. The laws governing the age or height/weight restrictions at which seat belts can be used instead of child restraints differs among countries, so you should be aware of the specific requirements in your country, and where you are travelling.

Child restraint systems must be properly placed and installed in the rear seat. You must use a commercially available child restraint system that meets the requirements of the Safety Standards of your country.

Child restraint systems are generally designed to be secured in a vehicle seat by the lap belt portion of a lap/shoulder belt, or by a LATCH system in the rear seats of the vehicle.

Child restraint system (CRS)

Infants and younger children must be restrained in an appropriate rear-facing or forward-facing CRS that has first been properly secured to the rear seat of the vehicle. Read and comply with the instructions for installation and use provided by the manufacturer of the child restraint.

⚠ WARNING
- Child Restraint Installation

An improperly secured child restraint can increase the risk of serious injury or death in an accident. Always take the following precautions when using a child restraint system:

- **Always follow the child restraint system manufacturer's instructions for installation and use.**

(Continued)

(Continued)

- **Always properly restrain your child in the child restraint.**
- **If the vehicle head restraint prevents proper installation of a child seat (as described in the child restraint system manual), the head restraint of the respective seating position should be readjusted or entirely removed.**
- **Do not use an infant carrier or a child safety seat that "hooks" over a seatback, it may not provide adequate protection in an accident.**

✻ NOTICE

After an accident, have a Kia dealer check the child restraint system, seat belts, tether anchors and lower anchors.

Selecting a Child Restraint System (CRS)

When selecting a CRS for your child, always:

- Make sure the CRS has a label certifying that it meets applicable Safety Standards of your country.
- Select a child restraint based on your child's height and weight. The required label or the instructions for use typically provide this information.
- Select a child restraint that fits the vehicle seating position where it will be used.
- Read and comply with the warnings and instructions for installation and use provided with the child restraint system.

⚠ WARNING - Holding Children

Never hold a child in your arms or lap when riding in a vehicle. The violent forces created during a crash will tear the child from your arms and throw the child against the car's interior. Always use a child restraint system which is appropriate for your child's height and weight.

⚠ WARNING - Unattended Children

Never leave children unattended in a vehicle. The car can heat up very quickly, resulting in injuries and possibly even death of the child in the vehicle.

⚠ WARNING - Seat Belt Use

Do not use one seat belt for two occupants at the same time. This will eliminate or greatly reduce the safety benefit provided by the seat belt to the occupants.

Child restraint system types

There are three main types of child restraint systems: rear-facing seats, forward-facing seats, and booster seats. They are classified according to the child's age, height and weight.

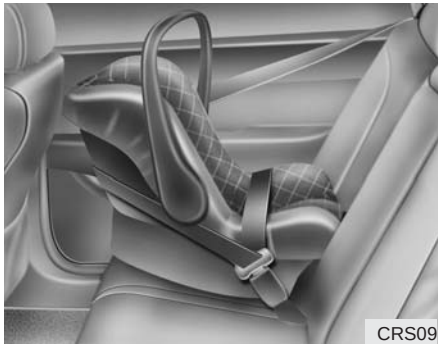

Rear-facing child seats

A rear-facing child seat provides restraint with the seating surface against the back of the child. The harness system holds the child in place, and in an accident, acts to keep the child positioned in the seat and reduces the stress to the neck and spinal cord.

All children under age one must always ride in a rear-facing infant child restraint.

Convertible and 3-in-1 child seats typically have higher height and weight limits for the rear-facing position, allowing you to keep your child rear-facing for a longer period of time.

Continue to use a rear-facing child seat for as long as your child will fit within the height and weight limits allowed by the child seat manufacturer. It's the best way to keep them safe. Once your child has outgrown the rear-facing child restraint, your child is ready for a forward-facing child restraint with a harness.

Forward-facing child restraints

A forward-facing child seat provides restraint for the child's body with a harness. Keep children in a forward-facing child seat with a harness until they reach the top height or weight limit allowed by your child restraint's manufacturer.

Once your child outgrows the forward-facing child restraint, your child is ready for a booster seat.

Booster seats

A booster seat is a restraint designed to improve the fit of the vehicle's seat belt system. A booster seat positions the seat belt so that it fits properly over the lap of your child.

Keep your child in a booster seat until they are big enough to sit in the seat without a booster and still have the seat belt fit properly. For a seat belt to fit properly, the lap belt must lie snugly across the upper thighs, not the stomach. The shoulder belt should lie snug across the shoulder and chest and not across the neck or face. Children under age 13 must always ride in the rear seats and must always be properly restrained to minimize the risk of injury.

Installing a Child Restraint System (CRS)

After selecting a proper child seat for your child, check to make sure it fits properly in your vehicle. Follow the instructions provided by the manufacturer when installing the child seat. Note these general steps when installing the seat to your vehicle:

- **Properly secure the child restraint to the vehicle.** All child restraints must be secured to the vehicle with the lap part of a lap/shoulder belt or with the LATCH system.
- **Make sure the child restraint is firmly secured.** After installing a child restraint to the vehicle, push and pull the seat forward and from side-to-side to verify that it is securely attached to the seat. A child restraint secured with a seat belt should be installed as firmly as possible. However, some side-to-side movement can be expected.
- **Secure the child in the child restraint.** Make sure the child is properly strapped in the child restraint according to the manufacturer instructions.

Lower Anchors and Tether for Children (LATCH) System

The LATCH system holds a child restraint during driving and in an accident. This system is designed to make installation of the child restraint easier and reduce the possibility of improperly installing your child restraint. The LATCH system uses anchors in the vehicle and attachments on the child restraint. The LATCH system eliminates the need to use seat belts to secure the child restraint to the rear seats.

Lower anchors are metal bars built into the vehicle. There are two lower anchors for each LATCH seating position that will accommodate a child restraint with lower attachments.

To use the LATCH system in your vehicle, you must have a child restraint with LATCH attachments.

The child seat manufacturer will provide you with instructions on how to use the child seat with its attachments for the LATCH lower anchors.

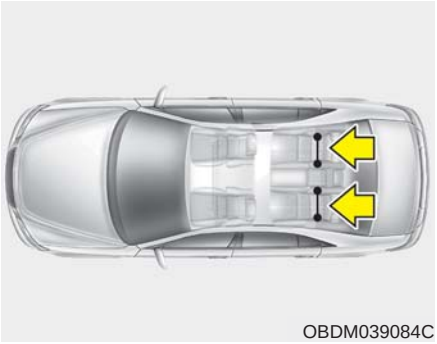

OBDM039084C

LATCH anchors have been provided in the left and right outboard rear seating positions. Their locations are shown in the illustration. There are no LATCH anchors provided for the center rear seating position.

⚠ WARNING - LATCH Lower Anchors

Never attempt to attach a LATCH equipped seat in the center seating position. LATCH lower anchors are only to be used in the left and right rear outboard seating positions. You may damage the anchors or the anchors may fail and break in a collision.

The lower anchor position indicator symbols are located on the left and right rear seat backs to identify the position of the lower anchors in your vehicle (see arrows in illustration).

The LATCH anchors are located between the seatback and the seat cushion of the rear seat left and right outboard seating positions.

To use the lower anchor, push the upper portion of the lower anchor cover.

❊ (1) : Lower Anchor position indicator
(2) : Lower Anchor

Securing a child restraint with the LATCH anchors system

To install a LATCH-compatible child restraint in either of the rear outboard seating positions:

1. Move the seat belt buckle away from the lower anchors.
2. Move any other objects away from the anchors that could prevent a secure connection between the child restraint and the lower anchors.
3. Place the child restraint on the vehicle seat, then attach the seat to the lower anchors according to the instructions provided by the child restraint manufacturer.
4. Follow the child restraint instructions for properly adjusting and tightening the lower attachments on the child restraint to the lower anchors.

⚠ WARNING

Take the following precautions when using the LATCH system:

- **Read and follow all installation instructions provided with your child restraint system.**
- **To prevent the child from reaching and taking hold of the unused seat belts, buckle all unused rear seat belts before the child is placed into the vehicle. Lock each unused seatbelt following the instructions in the "Automatic locking mode" subsection, and place the webbing behind the child seat or against an unused seatback. Children can be strangled if a shoulder belt becomes wrapped around their neck and the seat belt tightens.**

(Continued)

(Continued)

- **NEVER attach more than one child restraint to a single anchor. This could cause the anchor or attachment to come loose or break.**
- **Always have the LATCH system inspected by your authorized Kia dealer after an accident. An accident can damage the LATCH system and may not properly secure the child restraint.**

Securing a child restraint seat with "Tether Anchor" system

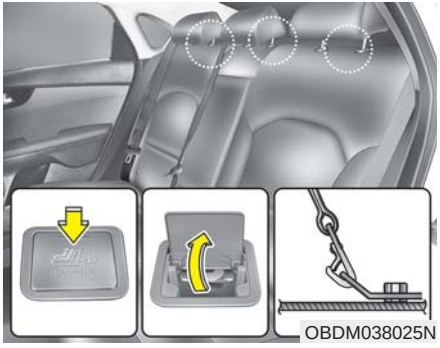

First secure the child restraint with the LATCH lower anchors or the seat belt. If the child restraint manufacturer recommends that the top tether strap be attached, attach and tighten the top tether strap to the top tether strap anchor.

Child restraint hook holders are located on the shelf behind the rear seats.

⚠ WARNING

Take the following precautions when installing the tether strap:

- **Read and follow all installation instructions provided with your child restraint system.**
- **NEVER attach more than one child restraint to a single tether anchor. This could cause the anchor or attachment to come loose or break.**
- **Do not attach the tether strap to anything other than the correct tether anchor. It may not work properly if attached to something else.**
- **Do not use the tether anchors for adult seat belts or harnesses, or for attaching other items or equipment to the vehicle.**
- **Always fasten the seat belts behind the child restraint seat when they are not used to secure the child seat. Failure to do so may result in child strangulation.**

OBD038026

To install the tether anchor:

1. Route the child restraint tether strap over the child restraint seatback. Route the tether strap under the head restraint and between the head restraint posts, or route the tether strap over the top of the vehicle seatback. Make sure the strap is not twisted.
2. Connect the tether strap hook to the tether anchor, then tighten the tether strap according to the child seat manufacturer's instructions to firmly secure the child restraint to the seat.
3. Check that the child restraint is securely attached to the seat by pushing and pulling the seat forward and from side-to-side.

Securing a child restraint with a lap/shoulder belt

When not using the LATCH system, all child restraints must be secured to a vehicle rear seat with the lap part of a lap/shoulder belt.

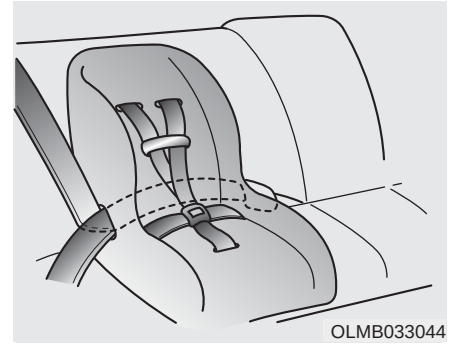
OLMB033044

Automatic locking mode

Since all passenger seat belts move freely under normal conditions and only lock under extreme or emergency conditions (emergency locking mode), you must manually pull the seat belt all the way out to shift the retractor to the "Automatic Locking" mode to secure a child restraint.

The "Automatic Locking" mode will help prevent the normal movement of the child in the vehicle from causing the seat belt to loosen and compromise the child restraint system. To secure a child restraint system, use the following procedure.

To install a child restraint system on the rear seats, do the following :

1. Place the child restraint system on a rear seat and route the lap/ shoulder belt around or through the child restraint, following the restraint manufacturer's instructions.

   Be sure the seat belt webbing is not twisted.

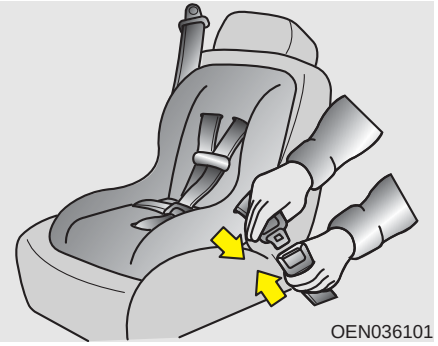

2. Fasten the lap/shoulder belt latch into the buckle. Listen for the distinct "click" sound.

   Position the release button so that it is easy to access in case of an emergency.

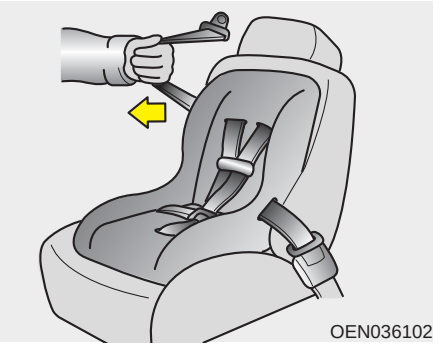

3. Pull the shoulder portion of the seat belt all the way out. When the shoulder portion of the seat belt is fully extended, it will shift the retractor to the "Automatic Locking" (child restraint) mode.

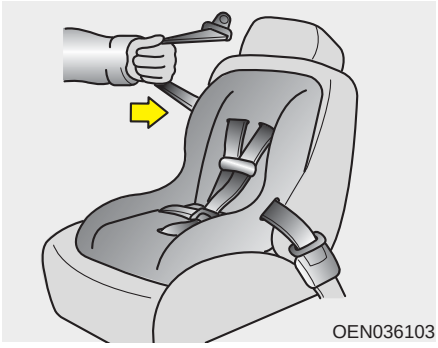

4. Slowly allow the shoulder portion of the seat belt to retract and listen for an audible “clicking” or “ratcheting” sound. This indicates that the retractor is in the “Automatic Locking” mode. If no distinct sound is heard, repeat steps 3 and 4.
5. Remove as much slack from the belt as possible by pushing down on the child restraint system while feeding the shoulder belt back into the retractor.
6. Push and pull on the child restraint system to confirm that the seat belt is holding it firmly in place. If it is not, release the seat belt and repeat steps 2 through 6.
7. Double check that the retractor is in the “Automatic Locking” mode by attempting to pull more of the seat belt out of the retractor. If you cannot, the retractor is in the “Automatic Locking” mode.

If your CRS manufacturer instructs or recommends you to use a tether anchor with the lap/shoulder belt, refer to the previous pages for more information.

✻ NOTICE

When the seat belt is allowed to retract to its fully stowed position, the retractor will automatically switch from the “Automatic Locking” mode to the emergency lock mode for normal adult usage.

⚠ WARNING - Auto lock mode

Set the retractor to Automatic Lock mode when installing any child restraint system. If the retractor is not in the Automatic Locking mode, the child restraint can move when your vehicle turns or stops suddenly.

To remove the child restraint, press the release button on the buckle and then pull the lap/shoulder belt out of the restraint and allow the seat belt to retract fully.

AIR BAG - ADVANCED SUPPLEMENTAL RESTRAINT SYSTEM

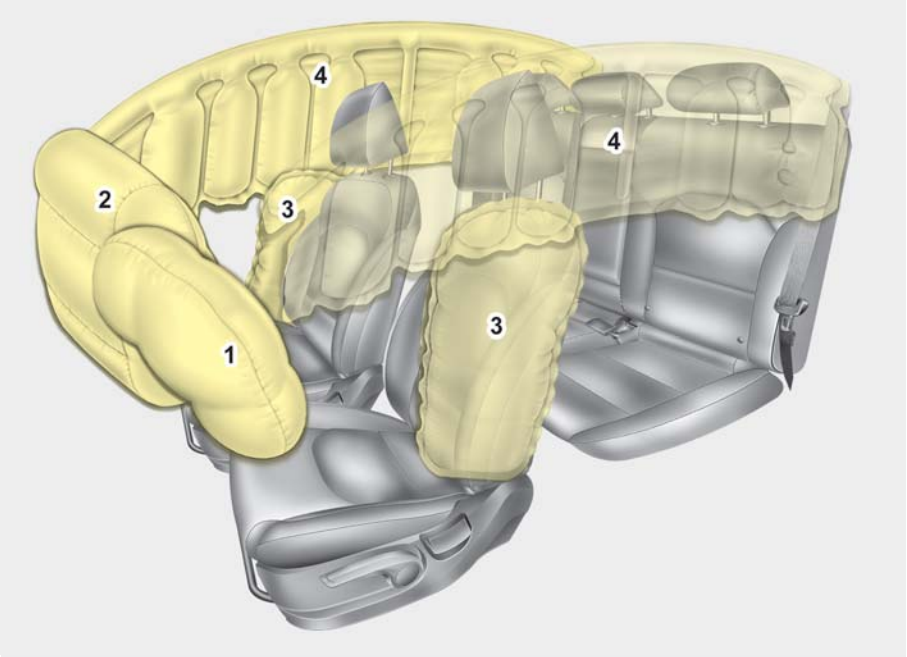

The actual air bags in the vehicle may differ from the illustration.

OBDM038028

(1) Driver's front air bag
(2) Passenger's front air bag
(3) Side air bag
(4) Curtain air bag

Even in vehicles with air bags, you and your passengers must always wear the safety belts provided in order to minimize the risk and severity of injury in the event of a collision or rollover.

How does the air bag system operate?

- Air bags are activated (able to inflate if necessary) only when the ignition switch or engine start/stop button is turned to the ON position or engine is running.
- The appropriate air bags inflate instantly in the event of a serious frontal collision or side collision in order to help protect the occupants from serious physical injury.
- There is no single speed at which the air bags will inflate.

  Generally, air bags are designed to inflate based upon the severity of a collision and its direction. These two factors determine whether the sensors produce an electronic deployment/ inflation signal.
- Air bag deployment depends on a number of factors including vehicle speed, angles of impact, and, the density and stiffness of the vehicles or objects which your vehicle hits in the collision. The determining factors are not limited to those mentioned above.
- The front air bags will completely inflate and deflate in an instant.

  It is virtually impossible for you to see the air bags inflate during an accident.

  It is much more likely that you will simply see the deflated air bags hanging out of their storage compartments after the collision.
- In addition to inflating in serious side collisions, side and/or curtain air bags will inflate if the sensing system detects a rollover.
- When a rollover is detected, side and/or curtain air bags will remain inflated longer to help provide protection from ejection, especially when used in conjunction with the seat belts.
- In order to help provide protection, the air bags must inflate rapidly. The speed of the air bag inflation is a consequence of the extremely short time in which to inflate the air bag between the occupant and the vehicle structures before the occupant impacts those structures. This speed of inflation reduces the risk of serious or life-threatening injuries and is thus a necessary part of the air bag design.

  However, air bag inflation can also cause injuries which can include facial abrasions, bruises and broken bones because the inflation speed also causes the air bags to expand with a great deal of force.
- **There are even circumstances under which contact with the steering wheel or passenger air bag can cause fatal injuries, especially if the occupant is positioned excessively close to the steering wheel or passenger air bag.**

⚠ WARNING - Airbag inflation

Sit as far back as possible from the steering wheel while still maintaining comfortable control of your vehicle. A distance of at least 25 cm (10 in.) from your chest to the steering wheel is recommended. Failure to do so can result in airbag inflation injuries to the driver.

Noise and smoke

When inflated, the air bags make a loud noise and leave smoke and powder in the air inside the vehicle. This is normal and is a result of the ignition of the air bag inflator. After the air bag inflates, you may feel substantial discomfort in breathing due to the contact of your chest with both the seat belt and the air bag, as well as from breathing the smoke and powder. **Open your doors and/or windows as soon as possible after impact in order to reduce discomfort and prevent prolonged exposure to the smoke and powder.**

Though the smoke and powder are non-toxic, they may cause irritation to the skin, eyes, nose and throat, etc. If this is the case, wash and rinse with cold water immediately and consult a doctor if the symptom persists.

⚠ WARNING - Hot components

Do not touch the air bag storage area's internal components immediately after airbag inflation. The air bag related parts in the steering wheel, instrument panel and the roof rails above the front and rear doors are very hot. Hot components can result in burn injuries.

⚠ WARNING

Do not install or place any accessories near air bag deployment areas, such as the instrument panel, windows, pillars, and roof rails.

Do not install a child restraint on the front passenger's seat.

1JBH3051

Never place a rear-facing child restraint in the front passenger's seat. If the air bag deploys, it would impact the rear-facing child restraint, causing serious or fatal injury.

In addition, do not place front-facing child restraints in the front passenger's seat. If the front passenger air bag inflates, it could cause serious or fatal injuries to the child.

⚠ WARNING - Air bag deployment

- **When children are seated in the rear outboard seats of a vehicle equipped with side and/or curtain air bags, install the child restraint system as far away from the door side as possible. Inflation of the side and/or curtain air bags could impact the child.**
- **Do not install or place any accessories near air bag deployment areas, such as the instrument panel, windows, pillars, and roof rails.**

Air bag warning light

W7-147

The purpose of the air bag warning light in your instrument panel is to alert you of a potential problem with your air bag system, which could include your side and/or curtain air bags used for rollover protection.

SRS components and functions

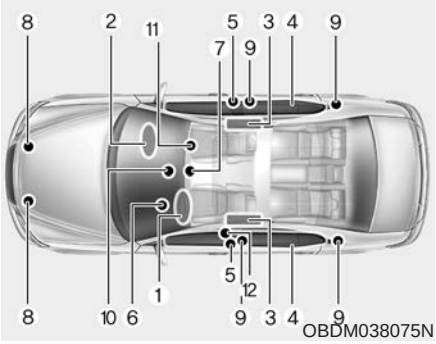

The SRS consists of the following components:

1. Driver's front air bag module
2. Passenger's front air bag module
3. Side air bag modules
4. Curtain air bag modules
5. Retractor pre-tensioner assemblies
6. Air bag warning light
7. SRS control module (SRSCM) / Rollover sensor
8. Front impact sensors
9. Side impact sensors
10. PASSENGER AIR BAG “OFF” indicator (Front passenger’s seat only)
11. Occupant detection system (Front passenger’s seat only)
12. Emergency fastening device (EFD)

If the air bag warning light is illuminated for more than 6 seconds after the Engine Start/Stop button is turned on, or of it illuminates during vehicle operation, an SRS component may not be functioning properly and you should have your vehicle checked by an authorized Kia dealer.

If any of the following conditions occur, this indicates a malfunction in the air bag system. Have an authorized Kia dealer inspect the air bag system as soon as possible.

- The air bag warning light does not turn on briefly when you turn the Engine Start/Stop button to the ON position.
- The light stays on after illuminating for approximately 6 seconds.
- The light comes on while the vehicle is in motion.
- The light blinks when the Engine Start/Stop button to the ON position.

Driver's front air bag (1)

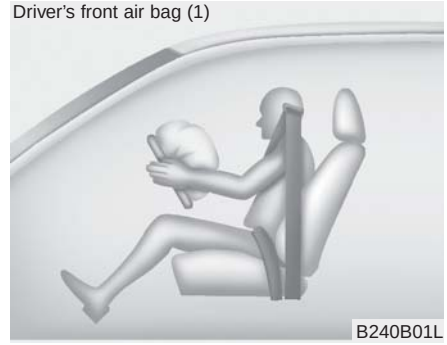

The front air bag modules are located both in the center of the steering wheel and in the front passenger's panel above the glove box. When the SRSCM detects a sufficiently severe impact to the front of the vehicle, it will automatically deploy the front air bags.

Driver's front air bag (2)

Upon deployment, tear seams molded directly into the pad covers will separate under pressure from the expansion of the air bags. Further opening of the covers then allows full inflation of the air bags.

Driver's front air bag (3)

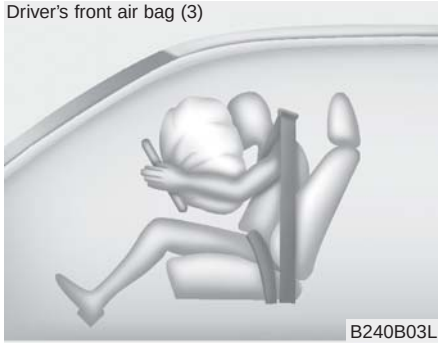

A fully inflated air bag, in combination with a properly worn seat belt, slows the driver's or the passenger's forward motion, reducing the risk of head and chest injury.

After complete inflation, the air bag immediately starts deflating, enabling the driver to maintain forward visibility and the ability to steer or operate other controls.

Passenger's front air bag

⚠ WARNING - Air bag obstructions

Do not install or place any accessories on the steering wheel, instrument panel, or on the front passenger's panel above the glove box in a vehicle. Such objects may become dangerous projectiles if the air bag deploys.

⚠ WARNING - Flying objects

Do not place any objects (an umbrella, bag, etc.) between the front door and the front seat. Such objects may become dangerous projectiles if the side airbag inflates.

- If an air bag deploys, there may be a loud noise followed by a fine dust released in the vehicle. These conditions are normal and are not hazardous - the air bags are packed in this fine powder. The dust generated during air bag deployment may cause skin or eye irritation as well as aggravate asthma for some persons. Always wash all exposed skin areas thoroughly with cold water and a mild soap after an accident in which the air bags were deployed.

- The SRS can function only when the Engine Start/Stop button is in the ON position. If the SRS air bag warning light does not illuminate, or continuously remains on after illuminating for about 6 seconds when the ignition switch is turned to the ON position, or after the engine is started, comes on while driving, the SRS is not working properly. If this occurs, have your vehicle immediately inspected by an authorized Kia dealer.

✻ NOTICE

Before you replace a fuse or disconnect a battery terminal, turn the Engine Start/Stop button to the OFF position.
Never remove or replace the air bag related fuse (s) when the Engine Start/Stop button is in the ON position.
Failure to heed this warning will cause the SRS air bag warning light to illuminate.

Occupant Detection System (ODS)

OBD038033

Your vehicle is equipped with an occupant detection system in the front passenger's seat.

The occupant detection system is designed to detect the presence of a properly-seated front passenger and determine if the passenger's front air bag should be enabled (may inflate) or not. Only the front passenger front air bag is controlled by the Occupant Detection System.

Do not put anything in front of the passenger air bag OFF indicator.

Main components of the occupant detection system

- A detection device located within the front passenger seat cushion.
- An electronic system which determines whether the passenger air bag systems should be activated or deactivated.
- An indicator light located on the instrument panel which illuminates the words PASSENGER AIR BAG “OFF” indicates the front passenger air bag system is deactivated.
- The instrument panel air bag warning light is interconnected with the occupant detection system.

If the front passenger seat is occupied by a person that the system determines to be of appropriate size, and he/she sits properly (sitting upright with the seatback in an upright position, centered on the seat cushion with their seat belt on, legs comfortably extended and their feet on the floor), the PASSENGER AIR BAG “OFF” indicator will turn off and the front passenger's air bag will be able to inflate, if necessary, in frontal crashes.

You will find the PASSENGER AIR BAG “OFF” indicator on the center facia panel. This system detects the conditions 1 ~ 4 in the following table and activates or deactivates the front passenger air bag based on these conditions.

Always be sure that you and all vehicle occupants are seated and restrained properly (sitting upright with the seat in an upright position, centered on the seat cushion, with the person’s legs comfortably extended, feet on the floor, and wearing the safety belt properly) for the most effective protection by the air bag and the safety belt.

- The ODS (Occupant Detection System) may not function properly if the passenger takes actions which can defeat the detection system. These include:

(1) Failing to sit in an upright position.

(2) Leaning against the door or center console.

(3) Sitting towards the sides or the front of the seat.

(4) Putting legs on the dashboard or resting them on other locations which reduce the passenger weight on the front seat.

(5) Improperly wearing the safety belt.

(6) Reclining the seat back.

Condition and operation in the front passenger occupant detection system

Condition detected by the occupant classification system	Indicator/Warning light		Devices
	"PASSENGER AIR BAG OFF" indicator light	SRS warning light	Front passenger air bag
1. Adult*1	Off	Off	Activated
2. Child restraint system with child under 12 months old *2 *3 *4	On	Off	Deactivated
3. Unoccupied	On	Off	Deactivated
4. Malfunction in the system	Off	On	Activated

*1 The system judges a person of adult size as an adult. When a smaller adult sits in the front passenger seat, the system may recognize him/her as a child depending on his/her physique and posture.

*2 Do not allow children to ride in the front passenger seat. When a larger child who has outgrown a child restraint system sits in the front passenger seat, the system may recognize him/her as an adult depending upon his/her physique or sitting position.

*3 Never install a child restraint system on the front passenger seat.

*4 The PASSENGER AIR BAG “OFF” indicator may turn on or off when a child above 12 months to 12 years old (with or without child restraint system) sits in the front passenger seat. This is a normal condition.

⚠ CAUTION

- ***Do not install a child restraint seat in the passenger seat when the seat is heavily soaked with any type of liquid.***
- ***Do not alter or modify the ODS (Occupant Detection System). This may damage the system and prevent its proper function in a collision.***

✻ NOTICE

- Do not use car seat cushions that cover up the surface of the seat and aftermarket manufactured passenger seat heaters.
- After conducting car interior using steam or detergents, the seat should be dried properly. Afterward, check for normal operation of the "PASS AIR BAG "OFF" and air bag warning lights.
- Any service related to the passenger seat and the ODS must be done at a Kia service center.
- After the passenger seat has been removed or installed for repair purposes, check for normal operation of the "PASS AIR BAG "OFF" and air bag warning lights with a person seated or not seated in the passenger seat.

⚠ WARNING - ODS System

Riding in an improper position adversely affects the Occupant Detection System and may result in the deactivation of the front passenger airbag. It is important for the driver to instruct the front passenger as to the proper seating instructions as contained in this manual.

✻ NOTICE

When the "PASS AIR BAG "OFF" symbol is illuminated, the passenger air bag system will not operate. The passenger air bag system will operate when necessary if the symbol is not illuminated.

✻ NOTICE

Do not modify or replace the front passenger seat. Don't place anything on or attach anything such as a blanket, front seat cover or after market seat heater to the front passenger seat. This can adversely affect the occupant detection system.

⚠ WARNING - ODS System

Riding in an improper position adversely affects the Occupant Detection System and may result in the deactivation of the front passenger airbag. It is important for the driver to instruct to instruct passengers as to the proper seating instructions as contained in this manual.

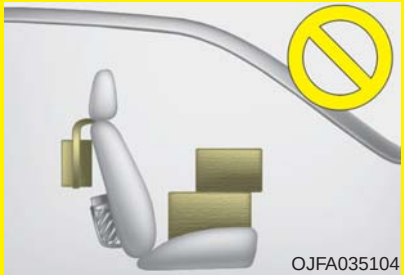

- **Do not place a heavy load in the front passenger seatback pocket or on the front passenger seat.**

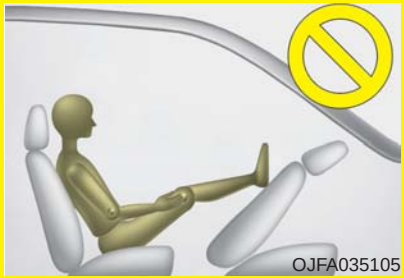

- **Do not place feet on the front passenger seatback.**

- **Never sit with hips shifted towards the front of the seat.**

- **Never excessively recline the front passenger seatback.**

- **Never place feet on the dashboard.**

(Continued)

(Continued)

- **Do not use car seat accessories such as thick blankets and cushions which cover up the car seat surface.**

- **Never lean on the door or center console.**
- **Never sit on one side of the front passenger seat.**

- **Do not place electronic devices such as laptops, DVD players, or conductive materials such as water bottles on the passenger seat.**

Do not use electronic devices such as laptops and satellite radios which use inverter chargers.

⚠ WARNING
- Wet Passenger Seat

Do not spill liquid on the passenger seat. Spilled liquid on the passenger seat may cause the air bag warning light to illuminate or malfunction. If any liquid is spilled, make sure the seat has been completely dried before driving the vehicle.

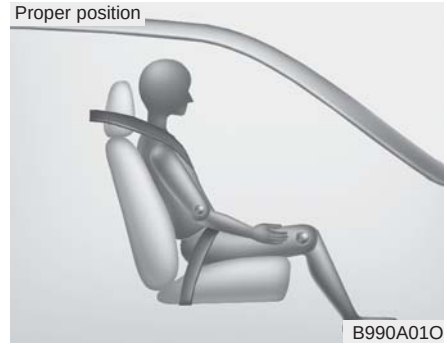

When an adult is seated in the front passenger seat, if the PASSENGER AIR BAG “OFF” indicator is on, turn the Engine Start/Stop button to the OFF position and ask the passenger to sit properly (sitting upright with the seat back in an upright position, centered on the seat cushion with their seat belt on, legs comfortably extended and their feet on the floor). Restart the engine and have the person remain in that position. This will allow the system to detect the person and to enable the passenger air bag.

If the PASSENGER AIR BAG “OFF” indicator is still on, ask the passenger to move to the rear seat.

⚠ WARNING
- “AIR BAG OFF” light

Do not allow an adult passenger to ride in the front seat when the PASSENGER AIR BAG “OFF” indicator is illuminated, because the air bag will not deploy in the event of a crash. The driver must instruct the passenger to reposition himself in the seat. Failure to properly position yourself may lead to air bag deactivation resulting in air bag non-deployment in a collision. If the PASSENGER AIR BAG “OFF” indicator remains illuminated after the passenger repositions themselves properly and the car is restarted, it is recommended that the passenger move to the rear seat because the passenger's front air bag will not deploy.

✻ NOTICE

The PASSENGER AIR BAG "OFF" indicator illuminates for about 4 seconds after the Engine Start/Stop button is turned to the ON position or after the engine is started. If the front passenger seat is occupied, the occupant detection sensor will then classify the front passenger after several more seconds.

- Even though your vehicle is equipped with the occupant detection system, never install a child restraint system in the front passenger's seat. A deploying air bag can forcefully strike a child resulting in serious injuries or death. Any child age 12 and under should ride in the rear seat. Children too large for child restraints should use the available lap/shoulder belts. No matter what type of crash, children of all ages are safer when restrained in the rear seat.
- If the PASSENGER AIR BAG "OFF" indicator is illuminated when the front passenger's seat is occupied by an adult and he/she sits properly (sitting upright with the seatback in an upright position, centered on the seat cushion with their seat belt on, legs comfortably extended and their feet on the floor), have that person sit in the rear seat. Any child age 12 and under should ride in the rear seat. Children too large for child restraints should use the available lap/shoulder belts. No matter what type of crash, children of all ages are safer when restrained in the rear seat.

If the occupant detection system is not working properly, the SRS air bag warning light on the instrument panel will illuminate because the passenger's front air bag is connected with the occupant detection system. If there is a malfunction of the occupant detection system, the PASSENGER AIR BAG "OFF" indicator will not illuminate and the passenger's front air bag may inflate in frontal impact crashes even if there is no occupant in the front passenger's seat.

Driver's and passenger's front air bag

■ Driver's front air bag

OBD038029

■ Passenger's front air bag

OBD038031

Your vehicle is equipped with an Advanced Supplemental Restraint (Air Bag) System and lap/shoulder belts at both the driver and passenger seating position.

The indication of the system's presence are the letters "AIR BAG" located on the air bag pad cover on the steering wheel and the passenger's side front panel pad above the glove box.

The SRS consists of air bags installed under the pad covers in the center of the steering wheel and the passenger's side front panel above the glove box.

The purpose of the SRS is to provide the vehicle's driver and/or the front passenger with additional protection than that offered by the seat belt system alone in case of a frontal impact of sufficient severity. The SRS uses sensors to gather information about the driver's and front passenger's seat belt usage and impact severity.

The seat belt buckle sensors determine if the driver and front passenger's seat belts are fastened.

These sensors provide the ability to control the SRS deployment based on whether or not the seat belts are fastened, and how severe the impact is.

The advanced SRS offers the ability to control the air bag inflation with two levels. A first stage level is provided for moderate-severity impacts. A second stage level is provided for more severe impacts.

The passenger's front air bag is designed to help reduce the injury of children sitting close to the instrument panel in low speed collisions. However, children are safer if they are restrained in the rear seat.

According to the impact severity and seat belt usage, the SRSCM (SRS Control Module) controls the air bag inflation. Failure to properly wear seat belts can increase the risk or severity of injury in an accident.

✻ NOTICE

The driver's hands should be placed on the steering wheel at the 9:00 and 3:00 positions. The passenger's arm and hands should be placed on their laps.

Additionally, your vehicle is equipped with an occupant detection system in the front passenger's seat. The occupant detection system detects the presence of a passenger in the front passenger's seat and will turn off the front passenger's air bag under certain conditions. For more detail, see “Occupant detection system” in this chapter.

Modification to the seat structure can cause the air bag to deploy at a different level than should be provided.

Manufacturers are required by government regulations to provide a contact point concerning modifications to the vehicle for persons with disabilities, which modifications may affect the vehicle’s advanced air bag system. That contact is Kia's toll-free Customer Experience Department at 1-877-KIA-AUTO (1-877-542-2886). However, Kia does not endorse nor will it support any changes to any part or structure of the vehicle that could affect the advanced air bag system, including the occupant detection system.

⚠ WARNING - Replacement/ modifications

The front passenger seat, dashboard or door should not be replaced except by an authorized Kia dealer using original Kia parts designed for this vehicle and model. Any other such replacement or modification could adversely affect the operation of the occupant detection system and your advanced air bags.

Advanced air bags are combined with pre-tensioner seat belts to help provide enhanced occupant protection in frontal crashes. Front air bags are not intended to deploy in collisions in which sufficient protection can be provided by the pre-tensioner seat belt.

✻ NOTICE

Air bags can only be used once – have an authorized Kia dealer replace the air bag immediately after deployment.

Front air bags are not intended to deploy in side-impact, rear-impact or rollover crashes. However, when frontal deployment threshold is satisfied in a side-impact crash, front air bags may deploy. In addition, front air bags will not deploy in frontal crashes below the deployment threshold.

⚠ WARNING - SRS Wiring

Do not tamper with or disconnect SRS wiring or other components of the SRS system. Doing so could result in injury, due to accidental deployment of the air bags or by rendering the SRS inoperative.

⚠ WARNING - No attaching objects

- **No objects (such as a crash pad cover, cellular phone holder, cup holder, perfume or stickers) should be placed over or near the air bag modules on the steering wheel, instrument panel, windshield glass, and the front passenger's panel above the glove box. Such objects could cause harm if the vehicle is in a crash severe enough to cause the air bags to deploy.**

  Do not place any objects over the air bag or between the air bag and yourself.
- **Never place or insert any object into any small opening near side airbag labels attached to the vehicle seats.**

  When the air bag deploys, the object may affect the deployment and result in unexpected accident or bodily harm.

Side air bag

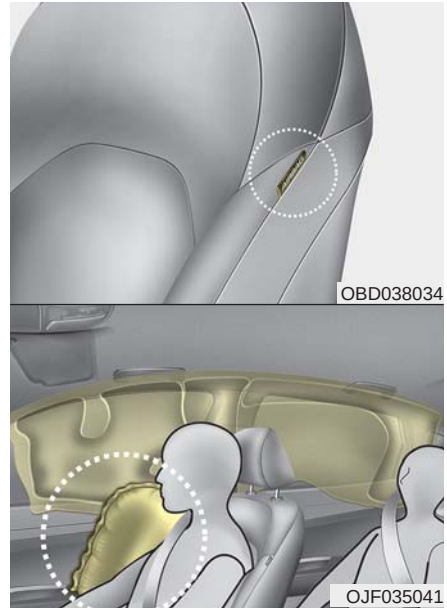

❊ The actual air bags in the vehicle may differ from the illustration.

Your vehicle is equipped with a side air bag in each front seat. The purpose of the air bag is to provide the vehicle's driver and/or the front passenger with additional protection than that offered by the seat belt alone.

- The side air bags are designed to deploy during certain side-impact collisions, depending on the crash severity, angle, speed and point of impact. However, when side deployment threshold is satisfied in a front-impact crash, the side air bags may deploy.
- The side air bags may deploy on the side of the impact or on both sides.
- The side and/or curtain air bags on both sides of the vehicle will deploy if a rollover or possible rollover is detected.
- The side air bags are not designed to deploy in all side impact or rollover situations.

⚠ WARNING - Unexpected deployment

Avoid impact to the side impact airbag sensor when the Engine Start/Stop button is ON to prevent unexpected deployment of the side air bag.

- The side air bag is supplemental to the driver's and the passenger's seat belt systems and is not a substitute for them. Therefore your seat belts must be worn at all times while the vehicle is in operation.
- For best protection from the side air bag system and to avoid being injured by the deploying side air bag, both front seat occupants should sit in an upright position with the seat belt properly fastened. The driver's hands should be placed on the steering wheel at the 9:00 and 3:00 positions. The passenger's arms and hands should be placed on their laps.

⚠ WARNING - Deployment

Do not install any accessories including seat covers, on the side or near the side air bag as this may affect the deployment of the side air bags.

- If the seat or seat cover is damaged, have the vehicle checked and repaired by an authorized Kia dealer. Inform the dealer that your vehicle is equipped with side air bags and an occupant detection system.

⚠ WARNING - Flying objects

Do not place any objects (an umbrella, bag, etc.) between the front door and the front seat. Such objects may become dangerous projectiles if the side airbag inflates.

⚠ WARNING - No attaching objects

- **Do not place any objects over the air bag or between the air bag and yourself. Also, do not attach any objects around the area in which the air bag inflates such as the door, side door glass, front and rear pillar.**
- **Do not put any objects between the side airbag label and seat cushion. It could cause harm if the vehicle is in a crash severe enough to cause the air bags to deploy.**
- **Never place or insert any object into any small opening near side airbag labels attached to the vehicle seats. When the air bag deploys, the object may affect the deployment and result in an unexpected accident or bodily harm.**
- **Do not install any accessories on the side or near the side air bags.**

Curtain air bag

OBD038035

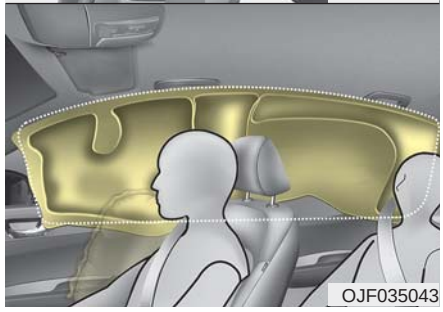

OJF035043

❊ The actual air bags in the vehicle may differ from the illustration.

Curtain air bags are located along both sides of the roof rails above the front and rear doors.

They are designed to help protect occupants in certain side impacts and to help prevent them from ejecting out of the vehicle as a result of a rollover, especially when the seatbelts are also in use.

- The curtain air bags are designed to deploy during certain side impact collisions, depending on the crash severity, angle, speed and point of impact. However, when side deployment threshold is satisfied in a front-impact crash, the curtain air bags may deploy.
- The curtain air bags may deploy on the side of the impact or on both sides.
- Also, the curtain air bags on both sides of the vehicle will deploy in certain rollover situations.
- The curtain air bags are not designed to deploy in all side impact or rollover situations.

Do not allow the passengers to lean their heads or bodies against the doors, put their arms on the doors, stretch their arms out of the window or place objects between the doors and passengers when they are seated on seats equipped with side impact and/or curtain air bags.

❊ NOTICE

Never try to open or repair any components of the side and curtain air bag system. This should only be done by an authorized Kia dealer.

⚠ WARNING - No attaching objects

- **Do not place any objects over the air bag. Also, do not attach any objects around the area the air bag inflates such as the door, side door glass, front and rear pillar, roof side rail.**
- **Do not hang hard or breakable objects on the coat hook.**

Why didn't my air bag go off in a collision? (Inflation and non-inflation conditions of the air bag)

There are many types of accidents in which the air bag would not be expected to provide additional protection.

These include rear impacts, second or third collisions in multiple impact accidents, as well as low speed impacts.

In these situations, the air bags may not deploy.

Air bag collision sensors

OBD038037/OBD038036/OBD038039/OBD038038/OBD038041

(1) SRS control module/ Rollover sensor

(2) Front impact sensor

(3) Side impact sensor

(4) Side impact sensor

⚠ WARNING - Air bag sensors

- **Do not hit or allow any objects to impact the locations where air bags or sensors are installed.**

  This may cause unexpected air bag deployment, which could result in serious personal injury or death.
- **If the installation location or angle of the sensors is altered in any way, the air bags may deploy when they should not or they may not deploy when they should.**

  Therefore, do not try to perform maintenance on or around the air bag sensors. Have the vehicle checked and repaired by an authorized Kia dealer.

Problems may arise if the sensor installation angles are changed due to the deformation of the front bumper, front end module, body or front doors where side collision sensors are installed. Have the vehicle checked and repaired by an authorized Kia dealer.

Installing bumper guards (or side step or running boards) or replacing a bumper (or front door module) with non-genuine parts may adversely affect your vehicle's collision and air bag deployment performance.

Air bag inflation conditions

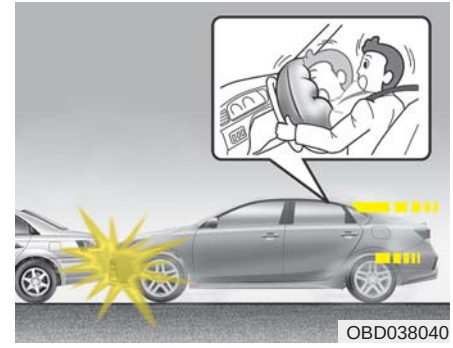

Front air bags

Front air bags are designed to inflate in a frontal collision depending on the intensity, speed or angles of impact of the front collision.

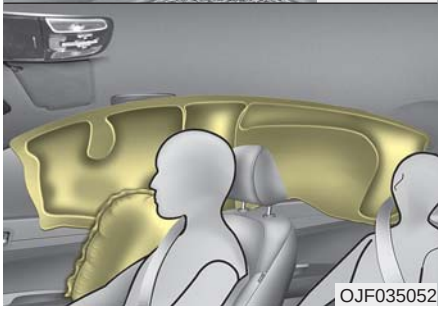

❊ The actual air bags in the vehicle may differ from the illustration.

Side and/or curtain air bags

Side and/or curtain air bags are designed to inflate when an impact is detected by side collision sensors depending on the strength, speed or angles of impact resulting from a side impact collision.

Also, the side and curtain air bags are designed to inflate when a rollover is detected by a rollover sensor.

Although the front air bags (driver's and front passenger's air bags) are designed to inflate in frontal collisions, they also may inflate in other types of collisions if the front impact sensors detect a sufficient frontal force in another type of impact. Side and curtain air bags are designed to inflate in certain side impact collisions. They may inflate in other types of collisions where a side force is detected by the sensors. Side air bag and/or curtain air bags may also inflate where rollover sensors indicate the possibility of a rollover occurring (even if none actually occurs) or in other situations, including when the vehicle is tilted while being towed.

Even where side and/or curtain air bags would not provide impact protection in a rollover, they may deploy to prevent ejection of occupants, especially those who are restrained with seat belts.

If the vehicle chassis is impacted by bumps or objects on unimproved roads, the air bags may deploy. Drive carefully on unimproved roads or on surfaces not designed for vehicle traffic to prevent unintended air bag deployment.

Air bag non-inflation conditions

- In certain low-speed collisions, the air bags may not deploy. The air bags are designed not to deploy in such cases because they may not provide benefits beyond the protection of the seat belts in such collisions.

- Air bags are not designed to inflate in rear collisions, because occupants are moved backward by the force of the impact. In this case, inflated air bags would not be able to provide any additional benefit.

- Front air bags may not inflate in side impact collisions, because occupants move to the direction of the collision, and thus in side impacts, frontal air bag deployment would not provide additional occupant protection.

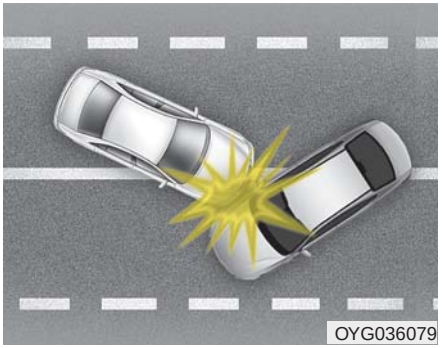

- In an angled collision, the force of impact may direct the occupants in a direction where the air bags would not be able to provide any additional benefit, and thus the sensors may not deploy any air bags.

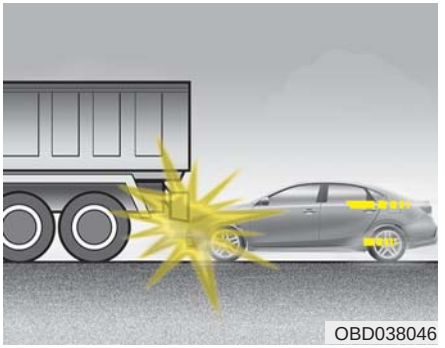

- Just before impact, drivers often brake heavily. Such heavy braking lowers the front portion of the vehicle causing it to “ride” under a vehicle with a higher ground clearance. Air bags may not inflate in this “under-ride” situation because deceleration forces that are detected by sensors may be significantly reduced by such “under-ride” collisions.

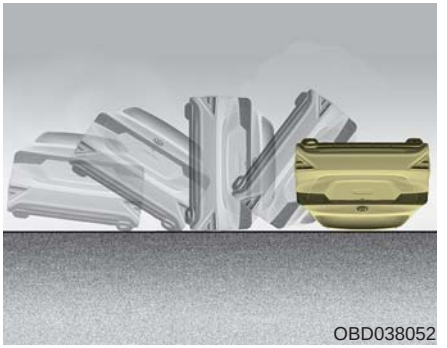

- Front air bags may not inflate in all rollover accidents where the SRSCM indicates that the front air bag deployment would not provide additional occupant protection.

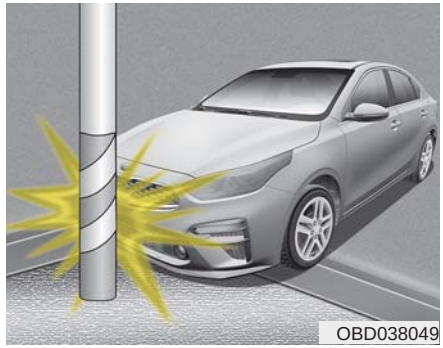

- Air bags may not inflate if the vehicle collides with objects such as utility poles or trees, where the point of impact is concentrated to one area and the full force of the impact is not delivered to the sensors.

SRS Care

The SRS is virtually maintenance-free and so there are no parts you can safely service by yourself. If the SRS air bag warning light does not illuminate, or continuously remains on, have your vehicle immediately inspected by an authorized Kia dealer.

Any work on the SRS system, such as removing, installing, repairing, or any work on the steering wheel, the front passenger's panel, front seats and roof rails must be performed by an authorized Kia dealer. Improper handling of the SRS system may result in serious personal injury.

For cleaning the air bag pad covers, use only a soft, dry cloth or one which has been moistened with plain water. Solvents or cleaners could adversely affect the air bag covers and proper deployment of the system.

If components of the air bag system must be discarded, or if the vehicle must be scrapped, certain safety precautions must be observed. An authorized Kia dealer knows these precautions and can give you the necessary information. Failure to follow these precautions and procedures could increase the risk of personal injury.

⚠ WARNING - Tampering with SRS

Do not tamper with or disconnect SRS wiring, or other components of the SRS system. Doing so could result in the accidental inflation of the air bags or render the SRS inoperative.

⚠ WARNING - Towing Vehicle

Always have the Engine Start/Stop button in the OFF position when your vehicle is being towed. The side air bags may inflate if the vehicle is tilted (such as when being towed) because of the rollover sensors in the vehicle.

Adding equipment to or modifying your air bag-equipped vehicle

If you modify your vehicle by changing your vehicle's frame, bumper system, front end or side sheet metal or ride height, this may affect the operation of your vehicle's air bag system.

Air bag warning label

Air bag warning labels, some required by the Canada Motor Vehicle Safety Standards (CMVSS), are attached to the sunvisor to alert the driver and passengers of potential risks of the air bag system.

Features of your vehicle

Keys 4-4
- Record your key number 4-4
- Key operations 4-4

Smart key 4-6
- Smart key functions 4-6
- Smart key precautions 4-8

Remote keyless entry 4-10
- Remote keyless entry system operations 4-10
- Transmitter precautions 4-11
- Battery replacement 4-12
- Immobilizer system 4-13

Theft-alarm system 4-16
- Armed stage 4-16
- Theft-alarm stage 4-17
- Disarmed stage 4-18

Door locks 4-19
- Operating door locks from outside the vehicle 4-19
- Operating door locks from inside the vehicle 4-20
- Impact sensing door unlock system 4-22
- Engine off door unlock system 4-22
- Child-protector rear door lock 4-22

Trunk 4-24
- Opening the trunk 4-24
- Closing the trunk 4-25
- Emergency trunk safety release 4-25

Smart trunk 4-26

Windows 4-30
- Power windows 4-31

Hood 4-35
- Opening the hood 4-35
- Closing the hood 4-36
- Hood open warning 4-36

Fuel filler lid 4-38
- Opening the fuel filler lid 4-38
- Closing the fuel filler lid 4-38

Sunroof 4-41
- Sunroof open warning 4-42
- Sliding the sunroof 4-43
- Tilting the sunroof 4-44
- Sunshade 4-45
- Resetting the sunroof 4-45

Steering wheel 4-47
- Electric Power Steering (EPS) 4-47
- Tilt and telescopic steering 4-48
- Horn 4-49
- Heated steering wheel 4-49

Mirrors 4-51
- Inside rearview mirror 4-51
- Outside rearview mirror 4-52

Instrument cluster 4-56
• Instrument cluster control 4-57
• LCD window control 4-57
• Gauges 4-58
• Transmission shift indicator 4-61
LCD windows 4-63
• Over view 4-63
• Trip information (Trip computer) 4-63
• Distance to empty 4-63
• LCD modes (For type B, C cluster) 4-69
• Service mode 4-70
• User settings mode (For type B, C cluster) 4-71
Warning and indicator lights 4-80
• Warning lights 4-80
• Indicator lights 4-90
Reverse parking distance warning 4-96
• Operation of the reverse parking distance warning . 4-96
• Non-operational conditions of reverse parking distance warning 4-97
• reverse parking distance warning precautions 4-98
• Self-diagnosis 4-98
Rear view monitor 4-99
Lighting 4-100
• Battery saver function 4-100
• Daytime running light 4-100
• Lighting control 4-100
• High beam operation 4-102
• High beam assist 4-103
• Turn signals and lane change signals 4-106
• Front fog light 4-107
Wipers and washers 4-108
• Windshield wipers 4-108
• Front windshield washers 4-109
Interior lights 4-110
• Room lamp 4-110
• Map lamp 4-110
• Trunk room lamp 4-111
• Vanity mirror lamp 4-112
• Glove box lamp 4-112
Welcome system 4-113
• Headlight (Headlamp) escort function 4-113
• Interior light 4-113
• Pocket light 4-113
Defroster 4-114
• Rear window defroster 4-114
Manual climate control system 4-115
• Heating and air conditioning 4-116
• System operation 4-121
• Climate control air filter 4-123

• Checking the amount of air conditioner refrigerant and compressor lubricant 4-124
Automatic climate control system 4-125
• Automatic heating and air conditioning 4-126
• Manual heating and air conditioning 4-127
• System operation 4-133
• Climate control air filter 4-135
• Checking the amount of air conditioner refrigerant and compressor lubricant 4-135
Windshield defrosting and defogging 4-137
• Manual climate control system 4-137
• Automatic climate control system 4-138
• Defogging logic 4-139
Storage compartments 4-142
• Center console storage 4-142
• Glove box 4-142
• Sunglass holder 4-143
Interior features 4-144
• Cup holder 4-144
• Seat warmer 4-144
• Air ventilation seat 4-146
• Sunvisor 4-146
• Sliding armrest 4-147
• Power outlet 4-148
• USB charger 4-149
• Wireless smart phone charging system 4-150
• Clothes hanger 4-153
• Floor mat anchor (s) 4-154
Audio system 4-155
• Antenna 4-155
• AUX, USB port 4-156
• How vehicle audio works 4-156
Declaration of Conformity 4-161
• IC 4-161

KEYS

Record your key number

The key code number is stamped on the key code tag attached to the key set. Should you lose your keys, this number will enable an authorized Kia dealer to duplicate the keys easily. Remove the key code tag and store it in a safe place. Also, record the key code number and keep it in a safe and handy place, but not in the vehicle.

⚠ WARNING - Aftermarket keys

Use only Kia original parts for the ignition key in your vehicle. If an aftermarket key is used, the ignition switch may not return to ON after START. If this happens, the starter will continue to operate causing possible fire due to excessive current in the wiring.

Key operations

Folding key

■ Folding key

OBD048028

To unfold the key, press the release button then the key will unfold automatically.

To fold the key, fold the key manually while pressing the release button

⚠ CAUTION - Key button operation

Do not fold the key without pressing the release button. This may damage the key.

Smart key

■ Smart key

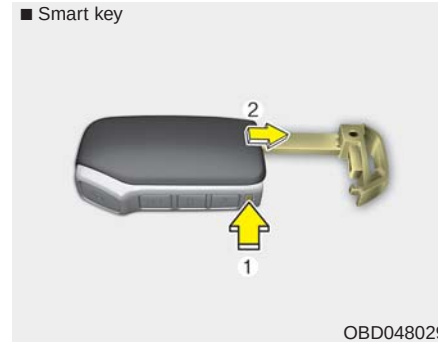

OBD048029

To remove the mechanical key, press and hold the release button and remove the mechanical key.

To reinstall the mechanical key, put the key into the hole and push it until a click sound is heard.

⚠ WARNING - Ignition key (Smart key)

Never leave the keys in your vehicle with unsupervised children. Leaving children unattended in a vehicle with a manual ignition key or a smart key is dangerous.

Children copy adults and they could place the key in the ignition switch or press the start button. The key would enable children to operate power windows or other controls, or even make the vehicle move, which could result in serious bodily injury or death.

SMART KEY (IF EQUIPPED)

OBDM048031N

With a smart key, you can lock or unlock a door and even start the engine without inserting the key.

The functions of the buttons on a smart key are similar to the remote keyless entry. (Refer to the “Remote keyless entry” in this chapter.)

Smart key functions

Carrying the smart key, you may lock and unlock the vehicle doors. Also, you may start the engine. Refer to the following, for more details.

Locking

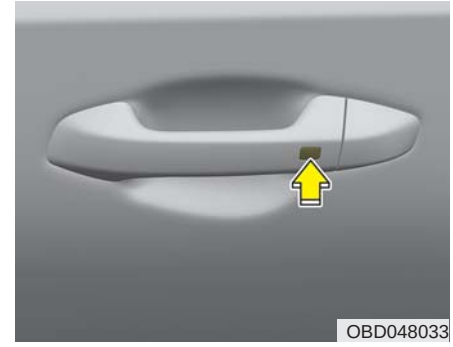

OBD048033

Pressing the button of the front outside door handles with all doors closed and any door unlocked, locks all the doors (and hood, trunk).

The hazard warning lights will blink once to indicate that all doors are locked. The button will only operate when the smart key is within 0.7 ~ 1m (28 ~ 40 in.) from the outside door handle. If you want to make sure that a door has locked or not, you should check the door lock button inside the vehicle or pull the outside door handle.

Even though you press the button, the doors will not lock and the chime will sound for 3 seconds if any of the following occurs:

- The smart key is in the vehicle.
- The ignition switch is in the ACC or ON position.
- Any door except the trunk is opened.

Unlocking

Pressing the button of the driver's outside door handle with all doors closed and locked, unlocks the driver's door. The hazard warning lights will blink and the chime will sound twice to indicate that the driver's door is unlocked.

Pressing the button in the front passenger's outside door handle with all doors closed and locked, unlocks all the doors. The hazard warning lights will blink and the chime will sound twice to indicate that all doors are unlocked. The button will only operate when the smart key is within 0.7~1 m (28~40 in.) from the outside door handle.

Trunk unlocking

If you are within 0.7 ~ 1 m (28 ~ 40 in.) from the outside trunk handle, with your smart key in possession, the trunk will unlock and open when you press the trunk handle switch.

The hazard warning lights will blink twice to indicate that the trunk is unlocked.

Also, once the trunk is opened and then closed, the trunk will lock automatically.

Smart key precautions

- If you lose your smart key, you will not be able to start the engine. Tow the vehicle, if necessary, and contact an authorized Kia dealer.
- A maximum of 2 smart keys can be registered to a single vehicle. If you lose a smart key, you should immediately take the vehicle and key to your authorized Kia dealer to protect it from potential theft.
- The smart key will not work if any of following occurs:
  - The smart key is close to a radio transmitter such as a radio station or an airport which can interfere with normal operation of the smart key.
  - The smart key is near a mobile two-way radio system or a cellular phone.
  - Another vehicle's smart key is being operated close to your vehicle.

  When the smart key does not work correctly, open and close the door with the mechanical key. If you have a problem with the smart key, contact an authorized Kia dealer.
- If the smart key is in close proximity to your cell phone or smart phone, the signal from the smart key could be blocked by normal operation of your cell phone or smart phone. This is especially important when the phone is active such as making calls, receiving calls, text messaging, and/or sending/receiving emails. Avoid placing the smart key and your cell phone or smart phone in the same pants or jacket pocket and maintain adequate distance between the two devices.
- Do not leave the smart key near metallic objects such as golf bags, metal cases and so on.
- Door Lock/Unlock failure or poor starting can occur when the smart key is placed near metallic objects.
- Always carry your smart key when you leave the car. An unattended smart key close to the vehicle can cause the vehicle battery to be discharged.
- Internal circuit damage may occur when the key comes into contact with moisture (beverage, water etc.) or heat. Damage to the smart key due to exposure to liquids or heat is not covered by the manufacturer's vehicle warranty.

⚠ CAUTION - Transmitter

Keep the smart key away from water or any liquid as it can become damaged and not function properly.

⚠ IC WARNING

This device complies with Industry Canada licence-exempt RSS standard(s).

Operation is subject to the following two conditions: (1) this device may not cause interference, and (2) this device must accept any interference, including interference that may cause undesired operation of the device.

This device complies with Industry Canada licence-exempt RSS standard(s).

Operation is subject to the following two conditions:

(1) This device may not cause interference, and

(2) This device must accept any interference, including interference that may cause undesired operation of the device.

✻ NOTICE

Changes or modifications not expressly approved by the party responsible for compliance could void the user's authority to operate the equipment. If the keyless entry system is inoperative due to changes or modifications not expressly approved by the party responsible for compliance, it will not be covered by your manufacturer's vehicle warranty.

REMOTE KEYLESS ENTRY (IF EQUIPPED)

Remote keyless entry system operations

■ Type A

OBD048030

■ Type B

OBD048031

Lock (1)

All doors are locked if the lock button is pressed. If all doors are closed, the hazard warning lights will blink and the chime will sound once to indicate that all doors are locked.

Also, if the lock button is pressed once more within 4 seconds, the hazard warning lights will blink and the chime will sound once to confirm that the door is locked.

However, if any door remains open, the hazard warning lights (and/or the chime) will not operate. But if all doors are closed after the lock button is pressed, the hazard warning lights will blink once.

Unlock (2)

The driver's door is unlocked if the unlock button is pressed once. The hazard warning lights will blink twice and the chime will sound twice to indicate that the driver’s door is unlocked.

All doors are unlocked if the unlock button is pressed once more within 4 seconds. The hazard warning lights will blink (for smart key, the chime also sounds) twice again to indicate that all doors are unlocked. After pressing this button, the doors will lock automatically unless you open any door within 30 seconds.

If you attempt to lock or unlock the door by pressing the door lock/unlock button in any of the following states, the door will not be locked or unlocked.

- When you want to lock or unlock the door in the ACC or ON state.
- When you want to lock a door in a car with one or more doors open.

Depending on the vehicle, the driver can turn off or set the TWO PRESS UNLOCK setting function.

✻ NOTICE

If the keyless entry system is inoperative due to exposure to water or liquids, it will not be covered by your manufacturer's vehicle warranty.

Trunk open (3)

The trunk is opened if the button is pressed for more than 1 second.

Once the trunk is opened and then closed, the trunk will lock automatically.

Panic alarm (4)

The horn sounds and the hazard warning lights blink for about 30 seconds if this button is pressed for more than 0.5 seconds. To stop the horn and lights, press any button on the transmitter.

Transmitter precautions

The transmitter (or smart key) will not work if any of following occurs:

- The ignition key is in the ignition switch.
- You exceed the operating distance limit (about 30 m [90 feet]).
- The battery in the transmitter (or smart key) is weak.
- Other vehicles or objects may be blocking the signal.
- The weather is extremely cold.
- The transmitter (or smart key) is close to a radio transmitter such as a radio station or an airport which can interfere with normal operation of the transmitter.

When the transmitter (or smart key) does not work properly, open and close the door with the ignition key. If you have a problem with the transmitter (or smart key), contact an authorized Kia dealer.

- If the transmitter is in close proximity to your cell phone or smart phone, the signal from the transmitter could be blocked by normal operation of your cell phone or smart phone. This is especially important when the phone is active such as making calls, receiving calls, text messaging, and/or sending/receiving emails. Avoid placing the transmitter and your cell phone or smart phone in the same pants or jacket pocket and maintain adequate distance between the two devices.

This device complies with Industry Canada licence-exempt RSS standard(s).

Operation is subject to the following two conditions:

(1) This device may not cause interference, and

(2) This device must accept any interference, including interference that may cause undesired operation of the device.

✻ NOTICE

Changes or modifications not expressly approved by the party responsible for compliance could void the user's authority to operate the equipment. If the keyless entry system is inoperative due to changes or modifications not expressly approved by the party responsible for compliance, it will not be covered by your manufacturer's vehicle warranty.

Battery replacement

OBD048032

A battery should last for several years, but if the transmitter or smart key is not working properly, try replacing the battery with a new one. If you are unsure how to use or replace the battery, contact an authorized Kia dealer.

1. Pry open the transmitter cover.
2. Replace the battery with a new battery (CR2032). When replacing the battery, make sure the battery position is correct.
3. Install the battery in the reverse order of removal.

- The transmitter or smart key is designed to give you years of trouble-free use, however it can malfunction if exposed to moisture or static electricity. If you are unsure how to use or replace the battery, contact an authorized Kia dealer.
- Using the wrong battery can cause the transmitter or smart key to malfunction. Be sure to use the correct battery.
- An inappropriately disposed battery can be harmful to the environment and human health. Dispose the battery according to your local law(s) or regulation.

⚠ CAUTION - Transmitter damage

The transmitter or smart key can malfunction if dropped, exposed to moisture, static electricity, heat or direct sunlight.

⚠ IC WARNING

This device complies with Industry Canada licence-exempt RSS standard(s).

Operation is subject to the following two conditions: (1) this device may not cause interference, and (2) this device must accept any interference, including interference that may cause undesired operation of the device.

Immobilizer system

Your vehicle may be equipped with an electronic engine immobilizer system to reduce the risk of unauthorized vehicle use.

Your immobilizer system is comprised of a small transponder in the ignition key and electronic devices inside the vehicle.

With the immobilizer system, whenever you insert your ignition key into the ignition switch and turn it to ON, it checks and determines and verifies that the ignition key is valid.

If the key is determined to be valid, the engine will start.

If the key is determined to be invalid, the engine will not start.

To deactivate the immobilizer system:

Insert the ignition key into the key cylinder and turn it to the ON position.

To activate the immobilizer system:

Turn the ignition key to the OFF position. The immobilizer system activates automatically. Without a valid ignition key for your vehicle, the engine will not start.

Your Immobilizer password is a customer unique password and should be kept confidential. Do not leave this number anywhere in your vehicle.

✻ NOTICE

Keep each key separately in order to avoid a starting malfunction.

✻ NOTICE

In order to prevent theft of your vehicle, do not leave spare keys anywhere in your vehicle. Your immobilizer password is a customer unique password and should be kept confidential. Do not leave this number anywhere in your vehicle.

Do not put metal accessories near the ignition switch.

Metal accessories may interrupt the transponder signal and may prevent the engine from being started.

If you need additional keys or lose your keys, consult an authorized Kia dealer.

⚠ CAUTION - Immobilizer damage

Do not expose your immobilizer system to moisture, static electricity or rough handling. This may damage your immobilizer.

⚠ CAUTION - Immobilizer alterations

Do not change, alter or adjust the immobilizer system because it could cause the immobilizer system to malfunction.

This device complies with Industry Canada licence-exempt RSS standard(s).

Operation is subject to the following two conditions:

(1) This device may not cause interference, and

(2) This device must accept any interference, including interference that may cause undesired operation of the device.

✻ NOTICE

Changes or modifications not expressly approved by the party responsible for compliance could void the user's authority to operate the equipment.

Limp home (override) procedure

When you turn the ignition switch to the ON position, if the immobilizer indicator ( ) goes off after blinking 5 times, your transponder equipped in the ignition key is out of order. You cannot start the engine without the limp home procedure. To start the engine, you have to input your password by using the ignition switch. Your password is only available from an authorized Kia dealership. Contact an authorized dealer for more information.

The following procedure is how to input your password of “2345” as an example.

1. Turn the ignition switch to the ON position. The immobilizer indicator ( ) will blink 5 times and go off indicating the beginning of the limp home procedure.
2. Turn the ignition switch to the ACC position.
3. To enter the first digit (in this example “2”), turn the ignition switch to the ON and ACC position twice. Perform the same procedure for the next digits between 3 seconds and 10 seconds (for example, for “3”, turn the ignition ON and ACC 3 times).
4. If all of the digits have been input successfully, you have to start the engine within 30 seconds. If you attempt to start the engine after 30 seconds, the engine will not start and you will have to input your password again.

After performing the limp home procedure, you have to see an authorized Kia dealer immediately to inspect and repair your ignition key or immobilizer system.

THEFT-ALARM SYSTEM (IF EQUIPPED)

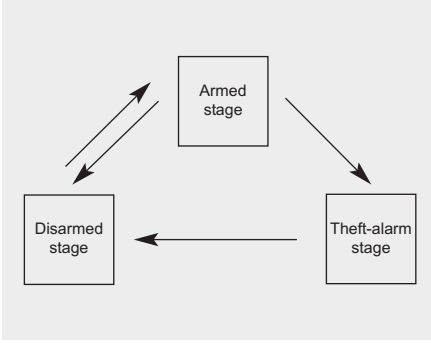

This system is designed to provide protection from unauthorized entry into the vehicle. This system is operated in three stages: the first is the "Armed" stage, the second is the "Theft-alarm" stage, and the third is the "Disarmed" stage. If triggered, the system provides an audible alarm with blinking of the hazard warning lights.

Armed stage

Using the smart key

Park the vehicle and stop the engine. Arm the system as described below.

1. Turn off the engine.
2. Make sure that all doors (and tailgate) and the engine hood are closed and latched.
3. • Lock the doors by pressing the button on the front outside door handle with the smart key in your possession.

   After completion of the steps above, the hazard warning lights operate once to indicate that the system is armed.

   If any door remains open, the doors won't lock and the chime will sound for 3 seconds. Close the door and try again to lock the doors.

   If the trunk or engine hood remains open, the hazard warning lights won't operate and the theft-alarm will not arm. After this, if the trunk and engine hood are closed, the hazard warning lights will blink once.

   • Lock the doors by pressing the lock button on the smart key.

   After completion of the steps above, the hazard warning lights will operate once to indicate that the system is armed.

   If any door, the trunk, or the engine hood remains open, the hazard warning lights won't operate and the theft-alarm will not arm. After this, if all doors, the trunk, and the engine hood are closed, the hazard warning lights blink once.

Using the transmitter

Park the vehicle and stop the engine. Arm the system as described below.

1. Turn off the engine and remove the ignition key from the ignition switch.
2. Make sure that all doors, the trunk, and the engine hood are closed and latched.
3. Lock the doors by pressing the lock button on the transmitter.

   After completion of the steps above, the hazard warning lights will blink once to indicate that the system is armed.

   If any door, the trunk, or the engine hood remains open, the hazard warning lights won't operate and the theft-alarm will not arm. After this, if all doors, the trunk, and the engine hood are closed, the hazard warning lights blink once.

- **Do not arm the system until all passengers have left the vehicle. If the system is armed while a passenger(s) remains in the vehicle, the alarm may be activated when the remaining passenger(s) leave the vehicle. If any door, the trunk, or the engine hood is opened within 30 seconds after entering the armed stage, the system is disarmed to prevent unnecessary alarm.**

Theft-alarm stage

The alarm will be activated if any of the following occurs while the system is armed.

- A front or rear door is opened without using the mechanical key or transmitter (or smart key).
- The trunk is opened without using the mechanical key or transmitter (or smart key).
- The engine hood is opened.

The horn will sound and the hazard warning lights will blink continuously for approximately 27 seconds (2 times). To turn off the system, unlock the doors with the transmitter (or smart key).

Disarmed stage

The system will be disarmed when:

Transmitter

- The door unlock button is pressed.
- The engine is started. (within 3 seconds)
- The ignition switch is in the "ON" position for 30 seconds or more.

Smart key

- The door unlock button is pressed.
- The button of the front outside door is pressed while carrying the smart key.
- The engine is started. (within 3 seconds)

After the doors are unlocked, the hazard warning lights will blink twice to indicate that the system is disarmed.

After pressing the unlock button, if any door or the trunk is not opened within 30 seconds, the system will be rearmed.

✻ NOTICE

- **Avoid trying to start the engine while the alarm is activated. The vehicle starting motor is disabled during the theft-alarm stage.**
  If the system is not disarmed with the transmitter, insert the key into the ignition switch, turn the ignition switch to the ON position and wait for 30 seconds. Then the system will be disarmed.
- **If you lose your keys, consult your authorized Kia dealer.**

DOOR LOCKS

Operating door locks from outside the vehicle

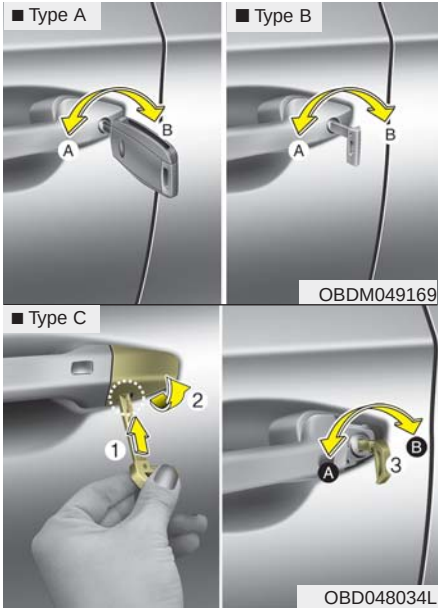

To remove the cover (if equipped, for type C) :

1. Pull out the door handle.
2. Press the lever (1) located inside the bottom part of the cover with a key or flat-head screwdriver.
3. Push out the cover (2) while pressing the lever.

- Turn the key (3) toward the front of the vehicle to unlock and toward the rear of the vehicle to lock.
- For the mechanical key, insert the key into the key hole directly of the driver`s outside handle.
- If you Lock (A)/Unlock (B) the driver's door with a key, the driver's door will lock/unlock automatically.
- From the driver's door, turn the key toward the front of the vehicle once to lock the driver's door and once more within 4 seconds to lock all doors.
- Doors can also be locked and unlocked with the transmitter key (or smart key).
- Once the doors are unlocked, they may be opened by pulling the door handle.
- When closing the door, push the door by hand. Make sure the doors are closed securely.

✻ NOTICE

- **In cold and wet climates, door lock and door mechanisms may not work properly due to freezing conditions.**
- **If the door is locked/unlocked multiple times in rapid succession with either the vehicle key or door lock switch, the system may stop operating temporarily in order to protect the circuit and prevent damage to system components.**

⚠ WARNING

If passengers must remain in the vehicle while it is very hot or cold outside, there is risk of injuries or danger to life. Do not lock the vehicle from the outside when there are passengers in the vehicle.

⚠ WARNING

- **Securely close your door before you begin driving. Failure to fully close your door may cause it to open during vehicle operation.**
- **Keep your body out of the way of the closing door to prevent injuries.**

⚠ CAUTION

Do not open and close the door repeatedly if unnecessary or with excessive force. Such action can damage the vehicle door.

Operating door locks from inside the vehicle

With the door lock button

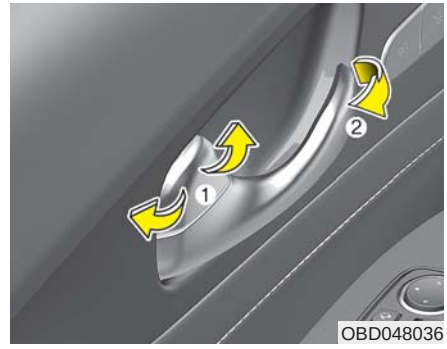

OBD048036

- To unlock a door, pull the door lock button (1) to the “Unlock” position. The red mark on the handle will be visible.
- To lock a door, push the door lock button (1) to the “Lock” position. If the door is locked properly, the red mark on the door handle will not show.
- To open a door, pull the door handle (2) outward.
- If the inner door handle of the front door is pulled when the door lock button is in the lock position, the button will unlock and the door will open.

⚠ WARNING

Do not pull the inner door handle while the vehicle is moving.

- Front doors cannot be locked if the ignition key is in the ignition switch (or if the smart key is in the vehicle) and any front door is opened.

If a power door lock ever fails to function while you are in the vehicle, try one or more of the following techniques to exit:

- Operate the door unlock feature repeatedly (both electronic and manual) while simultaneously pulling on the door handle.
- Operate the other door locks and handles, front and rear.
- Lower a front window and use the key to unlock the door from outside.

With central door lock switch

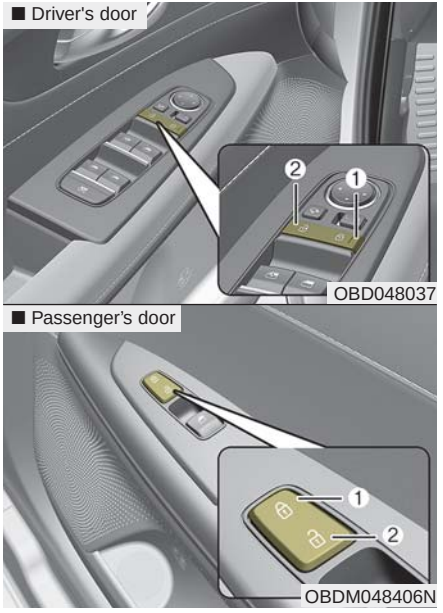

Operate by pressing the central door lock switch.

- Press the switch to the “Lock” position (1), all vehicle doors will lock.
- Press the switch to the “Unlock” position (2), all vehicle doors will unlock.
- If the key is in the ignition switch (or if the smart key is in the vehicle) and any front door is opened, the doors will not lock when the “Lock” position (1) of the central door lock switch is pressed. (if equipped)

⚠ WARNING - Doors

- **The doors should always be fully closed and locked while the vehicle is in motion to prevent accidental opening of the doors.**
- **Be careful when opening doors and watch for vehicles, motorcycles, bicycles or pedestrians approaching the vehicle in the path of the door. Opening a door when something is approaching can cause damage or injury.**

⚠ WARNING - Unattended children/animals

Never leave children or animals unattended in your vehicle.

An enclosed vehicle can become extremely hot, causing death or severe injury to unattended children or animals who cannot escape the vehicle.

Impact sensing door unlock system

All doors will automatically unlock when an impact causes the air bags to deploy.

Engine off door unlock system

All doors will automatically unlock:

- Without smart key system

  When the key is removed from the ignition switch.
- With smart key system

  When the engine start/stop button is in the OFF position.

Child-protector rear door lock

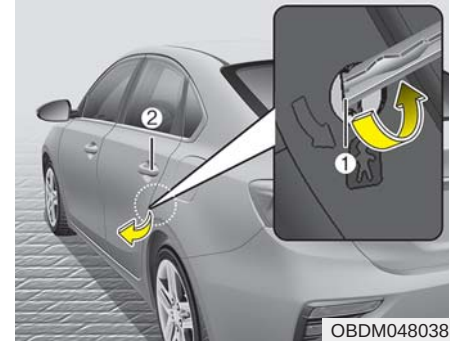

OBDM048038

The child safety lock is provided to help prevent children from accidentally opening the rear doors from inside the vehicle. The rear door safety locks should be used whenever children are in the vehicle.

1. Open the rear door.
2. Insert a key (or screwdriver) into the hole and turn it to the lock ( ) position (1), the child safety lock located on the rear edge of the door to the lock position. When the child safety lock is in the lock position, the rear door will not open even when the inner door handle is pulled.

3. Close the rear door.

To open the rear door, pull the outside door handle (2).

Even though the doors may be unlocked, the rear door will not open by pulling the inner door handle until the rear door child safety lock is unlocked.

⚠ WARNING - Rear door locks

Use the rear door safety locks whenever children are in the vehicle. If a child accidently opens the rear doors while the vehicle is motion, he can fall out.

Limp home (override) procedure

When you turn the ignition switch to the ON position, if the immobilizer indicator (🚗) goes off after blinking 5 times, your transponder equipped in the ignition key is out of order. You cannot start the engine without the limp home procedure. To start the engine, you have to input your password by using the ignition switch. Your password is only available from an authorized Kia dealership. Contact an authorized dealer for more information.

The following procedure is how to input your password of “2345” as an example.

1. Turn the ignition switch to the ON position. The immobilizer indicator (🚗) will blink 5 times and go off indicating the beginning of the limp home procedure.
2. Turn the ignition switch to the ACC position.
3. To enter the first digit (in this example “2”), turn the ignition switch to the ON and ACC position twice. Perform the same procedure for the next digits between 3 seconds and 10 seconds (for example, for “3”, turn the ignition ON and ACC 3 times).
4. If all of the digits have been input successfully, you have to start the engine within 30 seconds. If you attempt to start the engine after 30 seconds, the engine will not start and you will have to input your password again.

After performing the limp home procedure, you have to see an authorized Kia dealer immediately to inspect and repair your ignition key or immobilizer system.

TRUNK

Opening the trunk

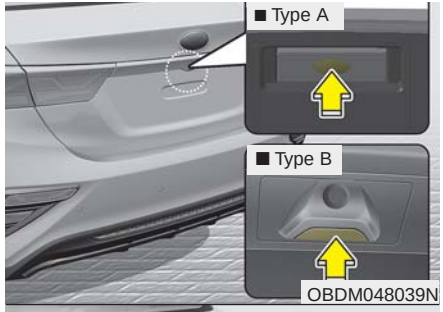

OBDM048039N

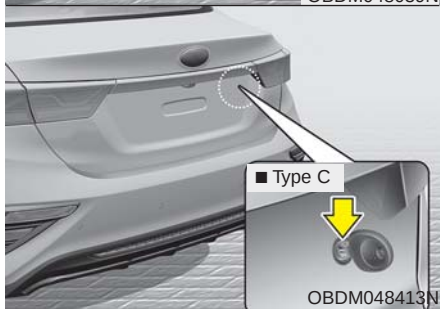

OBDM048413N

1. Make sure the shift lever is in P (Park, For Dual clutch transmission/ Intelligent Variable Transmission) or first gear or R (Reverse, For Manual Transmission) and set the parking brake.

2. Then do one of the following :
   - Press the Remote key or Smart Key Trunk Unlock button for more than one second.
   - Press the button on the trunk itself with the Smart Key in your possession.
   - Use the mechanical key. (if equipped with key hole)

OBD048040

- To open the trunk from inside the vehicle, pull the trunk lid release lever.

  Once the trunk is opened and then closed, the trunk locks automatically.

✻ NOTICE

In cold and wet climates, trunk lock and trunk mechanisms may not work properly due to freezing conditions.

⚠ WARNING

The trunk swings upward. Make sure no objects or people are near the rear of the vehicle when opening the trunk.

⚠ CAUTION

Make certain that you close the trunk before driving your vehicle. Possible damage may occur to attached hardware if the trunk is not closed prior to driving.

Closing the trunk

To close, lower the trunk lid, then press down on it until it locks. To be sure the trunk lid is securely fastened, always check by trying to pull it up again.

⚠ WARNING - Exhaust Fumes

The trunk lid should always be kept completely closed while the vehicle is in motion. If it is left open or ajar, poisonous exhaust gases may enter the car and serious illness or death may result.

⚠ WARNING

No one should be allowed to occupy the trunk at any time. The trunk is a very dangerous location in the event of a crash.

Emergency trunk safety release

Your vehicle is equipped with an emergency trunk release lever located inside the trunk. If someone is inadvertently locked in the trunk, moving the handle in the direction of the arrow will release the trunk latch mechanism and open the trunk.

No one should be allowed to occupy the trunk at any time. The trunk is a very dangerous location in the event of a crash.

Use the release lever for emergencies only. Use extreme caution, especially while the vehicle is in motion.

SMART TRUNK (IF EQUIPPED)

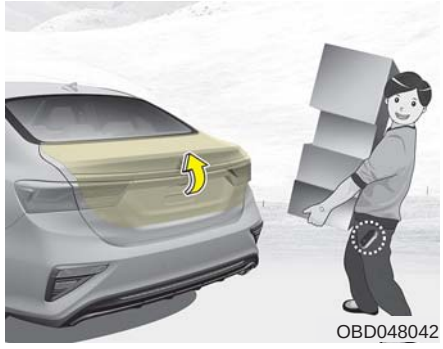
OBD048042

On a vehicle equipped with a smart key, the trunk can be opened with no-touch activation using the Smart Trunk system.

How to use the Smart Trunk

The trunk can be opened with no-touch activation if the conditions below are satisfied.

- After 15 seconds when all doors are closed and locked
- The smart key is positioned in the detecting area for more than 3 seconds.

✻ NOTICE

- **The Smart Trunk does not operate when:**
  - **The smart key is detected within 15 seconds after the doors are closed and locked, and is continuously detected.**
  - **The smart key is detected within 15 seconds after the doors are closed and locked, and 1.5 m (60 inches) from the front door handles. (for vehicles equipped with Welcome Light)**
  - **A door is not locked or closed.**
  - **The smart key is in the vehicle.**

OBDM048151C

1. Setting

To activate the Smart Trunk,

(1) Change the LCD modes to User setting mode

(2) Select the Door mode

(3) Check the Smart Trunk.

✻For more details, refer to “LCD Windows” in this chapter

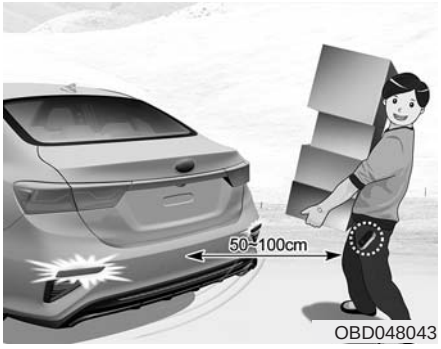

OBD048043

2. Detect and Alert

If you are positioned in the detecting area (50 ~ 100 cm (20 ~ 40 inches) behind the vehicle) carrying a smart key, the hazard warning lights will blink and chime will sound for about 3 seconds to alert you the smart key has been detected and the trunk will open.

✻ NOTICE

Do not approach the detecting area if you do not want the trunk to open. If you have unintentionally entered the detecting area and the hazard warning lights and chime starts to operate, leave the detecting area with the smart key. The trunk will stay closed.

OBD048044

3. Automatic opening

The hazard warning lights will blink and chime will sound 2 times and then the trunk will open.

⚠ WARNING

Make sure objects in the rear cargo area do not come out when opening the trunk as this could cause serious injury.

✻ NOTICE

The key should be kept out of reach of children. Children may inadvertently open the Smart Trunk while playing around the rear area of the vehicle.

- Make certain that you close the trunk before driving your vehicle.
- Make sure there are no people or objects around the trunk befor opening or closing the trunk.
- Make sure to deactivate the Smart trunk function when washing your vehicle.

  Otherwise, the trunk may open inadvertently.

How to deactivate the Smart Trunk function using the smart key

OBDM048031

1. Door lock
2. Door unlock
3. Trunk open
4. Panic alarm

If you press any button of the smart key during the Detect and Alert stage, the Smart Trunk function will be deactivated.

Make sure to be aware of how to deactivate the Smart Trunk function for emergency situations.

✻ NOTICE

- **If you press the door unlock button (2), the Smart Trunk function will be deactivated temporarily. But, if you do not open any door for 30 seconds, the smart trunk function will be activated again.**
- **If you press the trunk open button (3) for more than 1 second, the trunk opens.**
- **If you press the door lock button (1) or trunk open button (3) when the Smart Trunk function is not in the Detect and Alert stage, the smart trunk function will not be deactivated.**
- **In case you have deactivated the Smart Trunk function by pressing the smart key button or opening a door, the smart trunk function can be activated again by closing and locking all doors.**

Detecting area

OBD048045

- The Smart Trunk operates with a welcome alert if the smart key is detected within 50 ~ 100 cm (20 ~ 40 inches) from the trunk.
- The alert stops at once if the smart key is positioned outside the detecting area during the Detect and Alert stage.

✻ NOTICE

- **The Smart Trunk function will not work if any of the following occurs:**
  - **The smart key is close to a radio transmitter such as a radio station or an airport which can interfere with normal operation of the transmitter.**
  - **The smart key is near a mobile two way radio system or a cellular phone.**
  - **Another vehicle's smart key is being operated close to your vehicle.**
- **The detecting range may decrease or increase when :**
  - **One side of the vehicle is raised to replace a tire or to inspect the vehicle.**
  - **The vehicle is parked on a slope or unpaved road, etc.**

WINDOWS

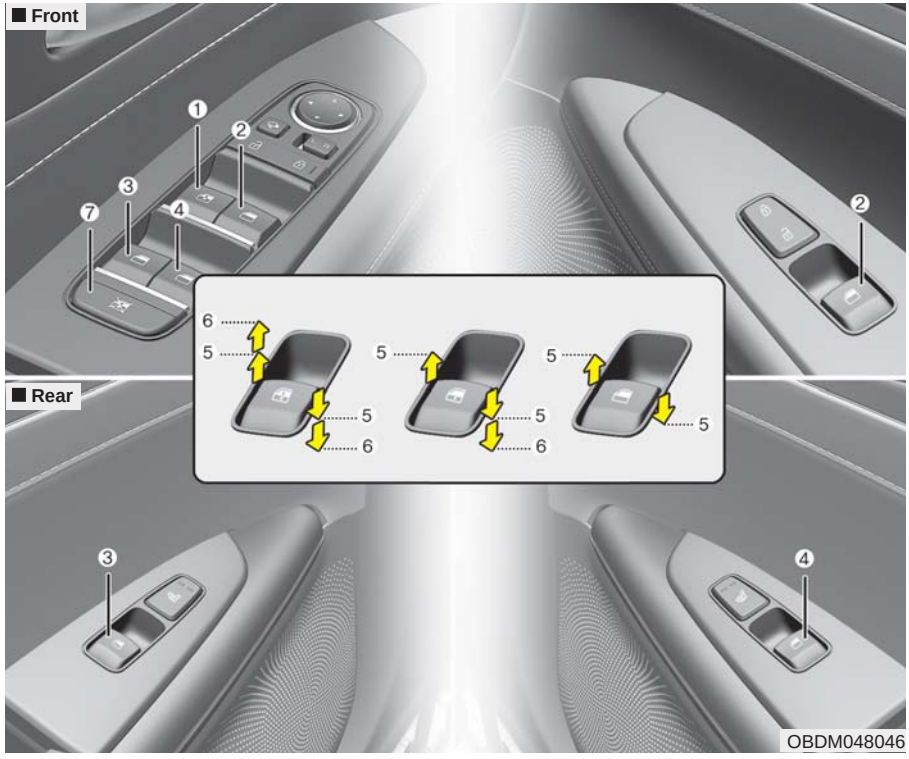

(1) Driver's door power window switch
(2) Front passenger's door power window switch
(3) Rear door (left) power window switch
(4) Rear door (right) power window switch
(5) Window opening and closing
(6) Automatic power window up*/ down*
(7) Power window lock button

* if equipped

✻ NOTICE

In cold and wet climates, power windows may not work properly due to freezing conditions.

Power windows

The ignition switch must be in the ON position for power windows to operate.

Each door has a power window switch that controls the door's window. The driver has a power window lock button which can block the operation of rear passenger windows.

The power windows can be operated for approximately 10 minutes after the ignition key is removed or is set to the to the ACC or LOCK position.

However, if the front doors are opened, the power windows cannot be operated even within the 10 minute period.

The driver's door has a master power window switch that controls all the windows in the vehicle.

If a window cannot be closed because it is blocked by objects, remove the objects and close the window.

✻ NOTICE

While driving with the rear windows down or with the sunroof (if equipped) in an open (or partially open) position, your vehicle may demonstrate a wind buffeting or pulsation noise. This noise is a normal occurrence and can be reduced or eliminated by taking the following actions. If the noise occurs with one or both of the rear windows down, partially lower both front windows approximately 2.5 cm (1 in.). If you experience the noise with the sunroof open, slightly reduce the size of the sunroof opening.

⚠ CAUTION

Do not install any accessories in the vehicle that extend into the open window area. Such objects will impact the proper function of the Automatic reversal "jam protection" feature described on "Automatic reversal" section of this manual.

Window opening and closing

To open or close a window, press down or pull up the front portion of the corresponding switch to the first detent position (5).

Auto down window (if equipped) (Driver's window)

Pressing the power window switch momentarily to the second detent position (6) completely lowers the driver's window even when the switch is released. To stop the window at the desired position while the window is in operation, briefly pull up the switch to the opposite direction of the window movement.

Auto up/down window (if equipped)

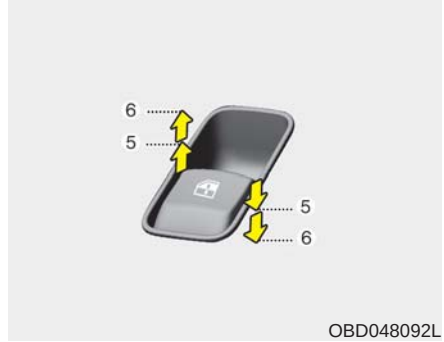

Pressing or pulling up the power window switch momentarily to the second detent position (6) completely lowers or lifts the window even when the switch is released. To stop the window at the desired position while the window is in operation, pull up or press and release the switch to the opposite direction of the movement.

If the power window is not operated correctly, the automatic power window system must be reset as follows:

1. Turn the ignition switch to the ON position.
2. Close the window and continue pulling up on the driver's power window switch for at least 1 second after the window is completely closed.

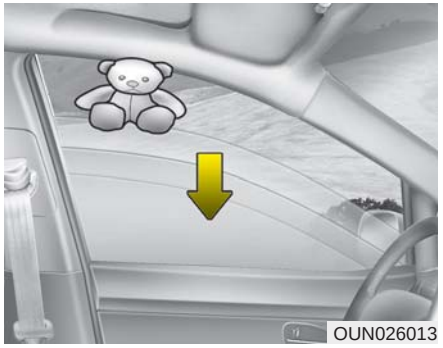

Automatic reversal (For Auto up/down window)

If the upward movement of the window is blocked by an object or part of the body, the window will detect the resistance and will stop upward movement. The window will then lower approximately 30 cm (11.8 in.) to allow the object to be cleared.

If the window detects the resistance while the power window switch is pulled up continuously, the window will stop upward movement then lower approximately 2.5 cm (1 in.).

And if the power window switch is pulled up continuously again within 5 seconds after the window is lowered by the automatic window reversal feature, the automatic window reversal will not operate.

The automatic reverse feature for the driver's window is only active when the "auto up" feature is used by fully pulling up the switch. The automatic reverse feature will not operate if the window is raised using the halfway position on the power window switch.

⚠ WARNING

Always check for obstructions before raising any window to avoid injuries or vehicle damage. If an object less than 4 mm (0.16 in.) in diameter is caught between the window glass and the upper window channel, the automatic reverse window may not detect the resistance and will not stop and reverse direction.

⚠ WARNING

The automatic reverse feature doesn't activate while resetting the power window system. Make sure body parts or other objects are safely out of the way before closing the windows to avoid injuries or vehicle damage.

⚠ WARNING

Do not install any accessories in the vehicle that extend into the open window area. Such objects could prevent the automatic reverse feature from functioning.

Power window lock button

The driver can disable the power window switches on the rear passengers' doors by pressing the power window lock switch to the lock position (pressed).

When the power window lock switch is pressed:

- **The driver's master control can operate all the power windows.**
- **The front passenger's control can operate the front passenger's power window.**
- **The rear passenger's control cannot operate the rear passenger's power window.**

⚠ **CAUTION**
- Opening/closing Window

To prevent possible damage to the power window system, do not open or close two windows or more at the same time. This will also ensure the longevity of the fuse.

⚠ **WARNING - Power windows**

- **Do not allow children to play with the power windows. Keep the power window lock button (on the driver's door) in the LOCK (pressed) position.**
- **Do not extend a face or arms outside through the window opening while driving. Doing so could result in significant injury.**

Always double check to make sure all arms, hands, head and other obstructions are safely out of the way before closing a window.

HOOD

Opening the hood

1. Pull the release lever to unlatch the hood. The hood should pop open slightly.

Open the hood after turning off the engine on a flat surface, shifting the shift lever to the P (Park) position for Dual clutch transmission/Intelligent Variable Transmission and to the 1st (First) gear or R (Reverse) for Manual Transmission, and setting the parking brake.

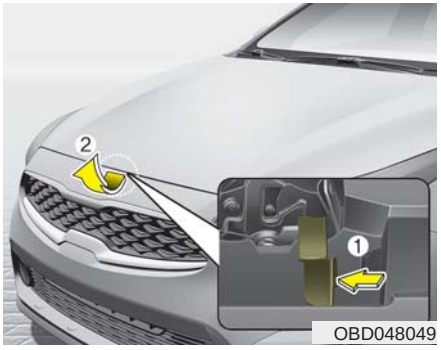

2. Go to the front of the vehicle, raise the hood slightly, push the secondary latch (1) inside of the hood center and lift the hood (2).

3. Pull the support rod from the hood.
4. Hold the hood open with the support rod.

⚠ WARNING - Hot parts

Grasp the support rod in the area wrapped in rubber. The rubber will help prevent you from being burned by hot metal when the engine is hot.

Closing the hood

1. Before closing the hood, check the following:
   - All filler caps in the engine compartment must be correctly installed.
   - Gloves, rags or any other combustible material must be removed from the engine compartment.
2. Return the support rod to its clip to prevent it from rattling.
3. Lower the hood until it is about 30 cm (1 ft.) above the closed position and let it drop. Make sure that it locks into place.
4. Check that the hood has engaged properly. If the hood can be raised slightly, it is not properly engaged.

   Open it again and close it with a little more force.

⚠ WARNING - Fire risk

Do not leave gloves, rags or any other combustible material in the engine compartment. Doing so may cause a heat-induced fire.

Hood open warning (if equipped)

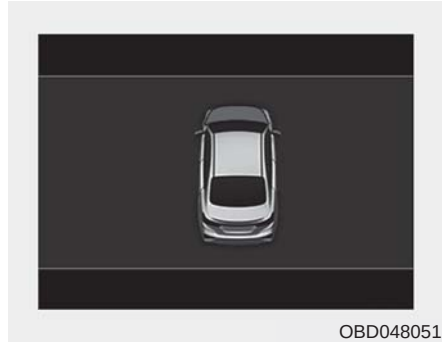

OBD048051

The warning message will appear on the LCD display when hood is open.

The warning chime will operate when the vehicle is being driven at or above 3 km/h (2 mph) with the hood open.

⚠ WARNING - Unsecured engine hood

Always double check to be sure that the hood is firmly latched before driving away. If it is not latched, the hood could fly open while the vehicle is being driven, causing a total loss of visibility, which might result in an accident.

⚠ CAUTION

Before closing the hood, ensure that all obstructions are removed from the engine compartment and surrounding body sheet metal. Closing the hood with an obstruction present could result in damage to the engine, sheet metal or the impacted objects.

⚠ WARNING

The support rod must be inserted completely into the hole whenever you inspect the engine compartment. This will prevent the hood from falling and possibly injuring you.

FUEL FILLER LID

Opening the fuel filler lid

The fuel filler lid must be opened from inside the vehicle by pulling up the fuel filler lid opener.

If the fuel filler lid does not open because ice has formed around it, tap lightly or push on the lid to break the ice and release the lid. Do not pry on the lid. If necessary, spray around the lid with an approved de-icer fluid (do not use radiator anti-freeze) or move the vehicle to a warm place and allow the ice to melt.

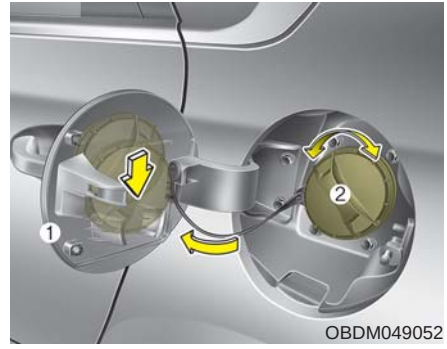

1. Stop the engine.
2. To open the fuel filler lid, pull the fuel filler lid opener up.
3. Pull open the fuel filler lid (1) out to fully open.
4. To remove the cap turn the fuel filler cap (2) counterclockwise.
5. Refuel as needed.

Closing the fuel filler lid

1. To install the cap, turn it clockwise until it “clicks” one time. This indicates that the cap is securely tightened.
2. Close the fuel filler lid and push it lightly and make sure that it is securely closed.

⚠ WARNING - Refueling

Always remove the fuel cap carefully and slowly. If the cap is venting fuel or if you hear a hissing sound, wait until the condition stops before completely removing the cap.

If pressurized fuel sprays out, it can cover your clothes or skin and subject you to the risk of fire and burns.

✻ NOTICE

When refueling on unlevel ground, the fuel gauge may not point to the F position. It is not a malfunction. If you move your vehicle to level ground, the fuel gauge will move to the full position.

✻ NOTICE

Tighten the cap until it clicks one time, otherwise the fuel cap open warning indicator light will illuminate.

Always check that the fuel cap is installed securely to prevent fuel spillage in the event of an accident.

⚠ WARNING - Fire/ explosion risk

Read and follow all warnings posted at the gas station facility. Failure to follow all warnings will result in severe personal injury, severe burns or death due to fire or explosion.

⚠ WARNING - Static electricity

- **Before touching the fuel nozzle, you should eliminate potentially dangerous static electricity discharge by touching another metal part of the vehicle, a safe distance away from the fuel filler neck, nozzle, or other gas source.**
- **Do not get back into a vehicle once you have begun refueling since you can generate static electricity by touching, rubbing or sliding against any item or fabric (polyester, satin, nylon, etc.) capable of producing static electricity. Static electricity discharge can ignite fuel vapors resulting in rapid burning. If you must re-enter the vehicle, you should once again eliminate potentially dangerous static electricity discharge by touching a metal part of the vehicle, away from the fuel filler neck, nozzle or other gasoline source.**

⚠ WARNING - Portable fuel container

When using an approved portable fuel container, be sure to place the container on the ground prior to refueling. Static electricity discharge from the container can ignite fuel vapors, causing a fire. Once refueling has begun, contact with the vehicle should be maintained until the filling is complete. Use only approved portable plastic fuel containers designed to carry and store gasoline.

⚠ WARNING - Cell phone fires

Do not use cellular phones while refueling. Electric current and/or electronic interference from cellular phones can potentially ignite fuel vapors causing a fire.

⚠ WARNING - Refueling& Vehicle fires

When refueling, always shut the engine off. Sparks produced by electrical components related to the engine can ignite fuel vapors, causing a fire. Once refueling is complete, check to make sure the filler cap and filler door are securely closed, before starting the engine.

⚠ WARNING - Smoking

DO NOT use matches or a lighter and DO NOT SMOKE or leave a lit cigarette in your vehicle while at a gas station especially during refueling. Automotive fuel is highly flammable and can, when ignited, result in fire.

Make sure to refuel your vehicle according to the “Fuel requirements” suggested in chapter 1.

If the fuel filler cap requires replacement, use only a genuine Kia cap or the equivalent specified for your vehicle. An incorrect fuel filler cap can result in a serious malfunction of the fuel system or emission control system.

⚠ CAUTION - Exterior paint

Do not spill fuel on the exterior surfaces of the vehicle. Any type of fuel spilled on painted surfaces may damage the paint.

SUNROOF (IF EQUIPPED)

OBD048054

If your vehicle is equipped with a sunroof, you can slide or tilt your sunroof with the sunroof control lever located on the overhead console.

The sunroof can only be opened, closed, or tilted when the ignition switch is in the ON position.

The sunroof can be operated for approximately 30 seconds after the ignition key is removed or turned to the ACC or LOCK (or OFF) position.

However, if the front door is opened, the sunroof cannot be operated even within the 30 second period.

⚠ CAUTION

To prevent damage to the sunroof, periodically remove any dirt that may accumulate on the guide rail.

In cold and wet climates, the sunroof may not work properly due to freezing conditions.

After the vehicle is washed or in a rainstorm, be sure to wipe off any water that is on the sunroof before operating it.

The sunroof cannot slide when it is in the tilt position nor can it be tilted while in an open or slide position.

⚠ CAUTION - Sunroof control lever

Do not continue to press the sunroof control lever after the sunroof is fully opened, closed, or tilted. Damage to the motor or system components could occur.

⚠ WARNING - Sunroof operation

When closing the sunroof, make sure there are no body parts in the movement range of the sliding roof. Parts of the body could become trapped or crushed.

⚠ WARNING

Never adjust the sunroof or sunshade while driving. This could result in loss of control and an accident that may cause death, serious injury, or property damage.

⚠ WARNING

In order to prevent accidental operation of the sunroof do not let a child operate the sunroof.

⚠ WARNING

Do not sit on the top of the vehicle as this may cause vehicle damage.

⚠ CAUTION

Do not extend any luggage outside the sunroof while driving.

Sunroof open warning (if equipped)

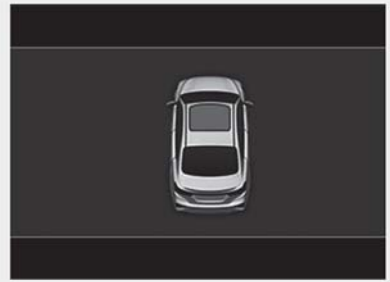

OBD048065

If the driver removes the ignition key (smart key: turns off the engine) and opens the driver-side door when the sunroof is not fully closed, the warning chime will sound for a few seconds and a warning image will appear on the LCD display.

Close the sunroof securely when leaving your vehicle.

⚠ CAUTION

Make sure the sunroof is fully closed when leaving your vehicle. If the sunroof is open, rain or snow may leak through the sunroof and wet the interior as well as allow theft to occur.

Sliding the sunroof

To open the sunroof automatically:

Pull the sunroof control lever backward to the second detent position and then release it. The sunroof will slide all the way open.

The sunroof will slide to the recommended open position (about 5 cm (2 in.)) before the maximum slide open position).

To stop the sunroof sliding at any point, pull or push the sunroof control lever briefly.

To open the sunroof to the maximum slide open position, press the switch towards the rear of the vehicle once again and hold it until the sunroof slides all the way open.

To reduce wind noise while driving, we recommend you drive at the recommended position (about 5 cm (2 in.)) before the maximum slide open position).

To close the sunroof automatically:

Push the sunroof control lever forward to the second detent position and then release it. The sunroof will automatically close all the way.

To stop the sunroof sliding at any point, pull or push the sunroof control lever briefly.

While driving with the sunroof in an open (or partially open position), your vehicle may demonstrate a wind buffeting or pulsation noise. This noise is a normal occurrence and can be reduced or eliminated by taking the following actions. If you experience the noise with the sunroof open, slightly reduce the size of the sunroof opening.

Automatic reversal

ORBC040096

If an object or part of the body is detected while the sunroof glass or sunshade is closing automatically, it will reverse the direction, and then stop.

The auto reverse function does not work if a tiny obstacle is between the sliding glass or sunshade and the sunroof frame. You should always check that all passengers and objects are away from the sunroof before closing it.

⚠ WARNING

Make sure heads, other body parts or other objects are safely out of the way before closing the window to avoid injuries or vehicle damage.

Objects less than 4 mm (0.16 inch) in diameter caught between the sunroof glass and the front window channel may not be detected by the automatic reverse window and the window will not stop and reverse direction.

Tilting the sunroof

OBD048064

To tilt open the sunroof, push the sunroof control lever upward until the sunroof moves to the desired position.

To close the sunroof, push the sunroof lever forward until the sunroof moves to the desired position.

⚠ WARNING - Sunroof

- **Be careful that no head, hands or body parts are obstructed by a closing sunroof.**
- **Do not extend the face, neck, arms or body outside the sunroof while driving.**

⚠ CAUTION - Sunroof motor damage

If you try to open the sunroof when the temperature is below freezing or when the sunroof is covered with snow or ice, the glass or the motor could be damaged.

Sunshade

OBK049019

When opening the sunroof, the sunshade will also open. Once the sunroof is closed, the sunshade can be manually closed.

Resetting the sunroof

Whenever the vehicle battery is disconnected or discharged, or related fuse is blown, you must reset your sunroof system as follows:

1. The ignition switch must be in the ON position.
2. Close the sunroof completely.
3. Release the control lever.
4. Push the control lever forward until the sunroof tilts and slightly moves up and down. Then, release lever.
5. Push the control lever forward until the sunroof is operated as follows:

   TILT DOWN → SLIDE OPEN → SLIDE CLOSE

   Then, release the control lever.

✻ NOTICE

Do not release the lever until the operation is completed.
If you release the lever during operation, try again from step 2.

❊ For more detailed information, contact an authorized Kia dealer.

❊ NOTICE

If the sunroof is not reset when the vehicle battery is disconnected or discharged, or related fuse is blown, the sunroof may operate improperly.

STEERING WHEEL

Electric power steering (EPS)

Power steering uses a motor to assist you in steering the vehicle. If the engine is off or if the power steering system becomes inoperative, the vehicle may still be steered, but it will require increased steering effort.

The electric power steering is controlled by the power steering control unit which senses the steering wheel torque and vehicle speed to command the motor.

The steering wheel becomes heavier as the vehicle's speed increases and becomes lighter as the vehicle's speed decreases for better control of the steering wheel.

Should you notice any change in the effort required to steer during normal vehicle operation, have the power steering checked by an authorized Kia dealer.

✻ NOTICE

The following symptoms may occur during normal vehicle operation:

- **The steering effort is increased immediately after turning the ignition switch on. This happens as the system performs the EPS system diagnostics. When the diagnostics are completed, the steering wheel will return to its normal condition**
- **A click noise may be heard from the EPS relay after the ignition switch is turned to the ON or LOCK position.**
- **Motor noise may be heard when the vehicle is at a stop or at a low driving speed.**
- **The steering effort increases if the steering wheel is rotated continuously when the vehicle is not in motion. However, after a few minutes, it will return to its normal condition.**
- **When you operate the steering wheel in low temperature, noise may occur. If the temperature rises, the noise will likely disappear. This is a normal condition.**

(Continued)

(Continued)

- **When the charging system warning light comes on or the battery voltage is low (when the alternator or battery does not operate normally), the steering wheel may get heavy and become difficult to control or operate abnormally.**

If the Electric Power Steering System does not operate normally, the warning light will illuminate on the instrument cluster. The steering wheel may require increased steering effort. Take your vehicle to an authorized Kia dealer and have the vehicle checked as soon as possible.

Tilt and telescopic steering (if equipped)

Tilt steering allows you to adjust the steering wheel before you drive. You can also raise it to give your legs more room when you exit and enter the vehicle.

The steering wheel should be positioned so that it is comfortable for you to drive, while permitting you to see the instrument panel warning lights and gauges.

⚠ WARNING - Steering wheel adjustment

Never adjust the angle and height of the steering wheel while driving. You may lose steering control

OBDM048066

To change the steering wheel angle, pull down the lock release lever (1), adjust the steering wheel to the desired angle (2) and height (3), then pull up the lock-release lever to lock the steering wheel in place. Be sure to adjust the steering wheel to the desired position before driving.

✻ NOTICE

After adjustment, sometimes the lock release lever may not lock the steering wheel. It is not a malfunction.
This occurs when two gears are not engaged correctly. In this case, adjust the steering wheel again and then lock the steering wheel.

Horn

OBD048068

To sound the horn, press the horn symbol on your steering wheel. Check the horn regularly to be sure it operates properly.

To sound the horn, press the area indicated by the horn symbol on your steering wheel mainly (see illustration).

Heated steering wheel

OBD048067

With the ignition switch in the ON position, pressing the heated steering wheel button warms the steering wheel. The indicator on the button will illuminate.

To turn the heated steering wheel off, press the button once again. The indicator on the button will turn off.

If you turn off the ignition while the steering wheel heater is ON, the heater will be OFF.

✻ NOTICE

The heated steering wheel will turn off automatically approximately 30 minutes after the heated steering wheel is turned on.

⚠ CAUTION

- ***Do not install any grip to operate the steering wheel. This causes damage to the heated steering wheel system.***
- ***When cleaning the heated steering wheel, do not use an organic solvent such as paint thinner, benzene, alcohol or gasoline. Doing so may damage the surface of the steering wheel.***
- ***If the surface of the steering wheel is damaged by a sharp object, damage to the heated steering wheel components could occur.***

⚠ WARNING

If the steering wheel becomes too warm, turn the system off. The heated steering wheel may cause burns even at low temperatures, especially if used for long periods of time.

MIRRORS

Inside rearview mirror

Adjust the rearview mirror so that the center view through the rear window is seen. Make this adjustment before you start driving.

Do not place objects in the rear seat which would interfere with your vision through the rear window.

⚠ WARNING - Mirror adjustment

Do not adjust the rearview mirror while the vehicle is moving. This could result in loss of control.

⚠ WARNING

Do not modify the inside mirror in any manner including installing a wider mirror. Doing so could result in injury during an accident or deployment of the air bag.

Day/night rearview mirror (if equipped)

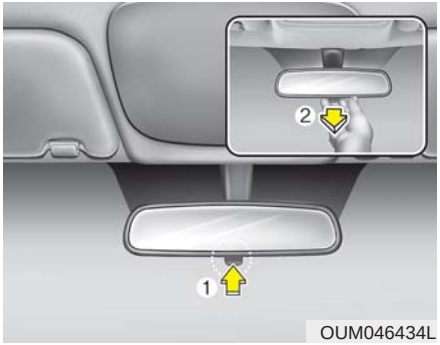

Make this adjustment before you start driving and while the day/night lever is in the day position (1).

Pull the day/night lever toward you (2) to reduce the glare from the headlights of the vehicles behind you during night driving.

Remember that you lose some rearview clarity in the night position.

❈ (1) : Day, (2) : Night

Electrochromic mirror (ECM) (if equipped)

The electric rearview mirror automatically controls the glare from the headlights of the vehicles behind you in nighttime or low light driving conditions. The sensor mounted in the mirror senses the light level around the vehicle, and automatically controls the headlight glare from the vehicles behind you.

When the engine is running, the glare is automatically controlled by the sensor mounted in the rearview mirror.

Whenever the shift lever is shifted into reverse (R), the mirror will automatically go to the brightest setting in order to improve the driver's view behind the vehicle.

⚠ **CAUTION**

When cleaning the mirror, use a paper towel or similar material dampened with glass cleaner. Do not spray glass cleaner directly on the mirror. It may cause the liquid cleaner to enter the mirror housing.

To operate the electric rearview mirror:

- The mirror defaults to the ON position whenever the ignition switch is turned on.
- Press the ON/OFF button (1) to turn the automatic dimming function off. The mirror indicator light (2) will turn off.

  Press the ON/OFF button (1) to turn the automatic dimming function on. The mirror indicator light (2) will illuminate.

❊(2) : Indicator, (3) : Sensor

Outside rearview mirror

Be sure to adjust mirror angles before driving.

Your vehicle is equipped with both left-hand and right-hand outside rearview mirrors. The mirrors can be adjusted remotely with the remote switch (if equipped). The mirror heads can be folded to prevent damage during an automatic car wash or when passing through a narrow street.

The right outside rearview mirror is convex. Objects seen in the mirror are closer than they appear.

Use your interior rearview mirror or direct observation to determine the actual distance of following vehicles when changing lanes.

⚠ CAUTION - Rearview mirror

Do not scrape ice off the mirror face; this may damage the surface of the glass. If ice should restrict movement of the mirror, do not force the mirror for adjustment. To remove ice, use a deicer spray, or a sponge or soft cloth with very warm water.

⚠ WARNING - Mirror adjustment

Do not adjust or fold the outside rearview mirrors while the vehicle is moving. This could result in loss of control.

Remote control

Electric type

The electric remote control mirror switch allows you to adjust the position of the left and right outside rearview mirrors. To adjust the position of either mirror, the ignition switch should be in the ACC or ON position.

To adjust the position of either mirror, move the R or L switch (1) to select the right side mirror or the left side mirror, then press a corresponding point (▲) on the mirror adjustment control to position the selected mirror up, down, left or right.

⚠ CAUTION - Outside mirror

- ***The mirrors stop moving when they reach the maximum adjusting angles, but the motor continues to operate while the switch is pressed. Do not press the switch longer than necessary, as the motor may be damaged.***
- ***Do not attempt to adjust the outside rearview mirror by hand. Doing so may damage the parts.***

Folding the outside rearview mirror

Electric type (if equipped)

To fold the outside rearview mirror, press the button (1).

To unfold it, press the button again.

① The mirror will fold or unfold when the door is locked or unlocked by the folding key or smart key.

② The mirror will fold or unfold when the door is locked or unlocked by the button on the outside door handle with a smart key in possession. (if equipped)

③ The mirror will unfold when you approach the vehicle (all doors closed and locked) with a smart key in possession. (if equipped)

- Auto Folding function

The mirror will fold or unfold automatically as follows :

- For type A cluster (refer to this section “INSTRUMENT CLUSTER”)

  If you press the outside mirror folding button (1) for 5 seconds or more, the function will turn On or Off. When you turn on the function, a warning sound will be heard once; when you turn off the function, the warning sound will be heard twice.

The ① and ② in the left explanation is have on/off function, and the ③ is haven't on/off function.

- For type B, C cluster (refer to this section “INSTRUMENT CLUSTER”)

  You can turn the function On or Off in the cluster user settings menu.

✻ NOTICE

- Electric type outside rearview mirror

The electric type outside rearview mirror operates even though the ignition switch is in the OFF position. However, to prevent unnecessary battery discharge, do not adjust the mirrors longer than necessary while the engine is not running.

⚠ CAUTION

Do no fold an electric type outside rearview mirror by hand. Doing so could cause motor failure.

Manual type

To fold outside rearview mirror, grasp the housing of the mirror and then fold it toward the rear of the vehicle.

INSTRUMENT CLUSTER

■ Type A

■ Type B

■ Type C

1. Tachometer
2. Speedometer
3. Engine coolant temperature gauge
4. Fuel gauge
5. Warning and indicator lights
6. LCD display

❊ The actual cluster in the vehicle may differ from the illustration.
For more details, refer to the “Guages” section in this chapter.

OBDM048407C/OBDM048408C/OBDM048409C

Instrument Cluster Control

Adjusting Instrument Cluster Illumination

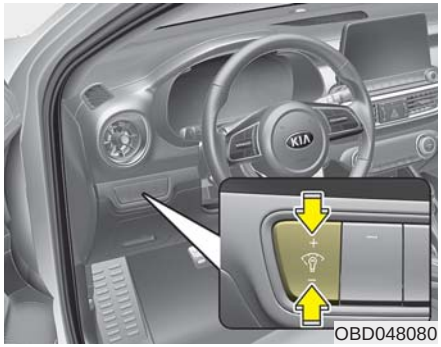

OBD048080

The instrument panel illumination intensity can be adjusted by pressing the control switch with the headlight switch in any position when the ignition switch is in the ON position.

The illumination intensity is shown on the instrument cluster LCD window.

■ Type A

OBD048161L

■ Type B

OBD048149L

- If you hold the illumination control button ("+" or "-"), the brightness will be changed continuously.
- If the brightness reaches the maximum or minimum level, an alarm will sound.

LCD window Control

■ Type A

OBD049088L

■ Type B

OBD049089L

■ Type C

OBD049090L

The LCD window modes can be changed by using the control buttons on the steering wheel.

[Type A]

(1) TRIP : TRIP button for changing trip modes

(2) RESET : RESET button for resetting items

[Type B,C]

(1) 🗐 : MODE button for change LCD MODES

(2) ∧/∨ : MOVE scroll switch to select items

(3) OK : SET/RESET button for setting or resetting items

❊ For the LCD modes, refer to “LCD window” in this chapter.

Gauges

Speedometer

OBDM048162C

The speedometer indicates the forward speed of the vehicle.

The speedometer is calibrated in miles per hour and/or kilometers per hour.

Tachometer

OYB046106

The tachometer indicates the approximate number of engine revolutions per minute (rpm).

Use the tachometer to select the correct shift points and to prevent lugging and/or over-revving the engine.

The tachometer pointer may move slightly when the ignition switch is in ACC or ON position with the engine OFF. This movement is normal and will not affect the accuracy of the tachometer once the engine is running.

⚠ CAUTION - Red zone

Do not operate the engine within the tachometer's RED ZONE. This may cause severe engine damage.

⚠ WARNING - Hot radiator

Never remove the radiator cap when the engine is hot. The engine coolant is under pressure and could cause severe burns. Wait until the engine is cool before adding coolant to the reservoir.

Engine coolant temperature gauge

OBD048108R

This gauge shows the temperature of the engine coolant when the ignition switch is ON.

If the gauge pointer moves beyond the normal range area toward the “H” position, it indicates overheating that may damage the engine.

Do not continue driving with an overheated engine. If your vehicle overheats, refer to the “If the engine overheats” section in Chapter 6.

Fuel gauge

OBD048109

The fuel gauge indicates the approximate amount of fuel remaining in the fuel tank. The fuel tank capacity is indicated in Chapter 8. The fuel gauge is supplemented by a low fuel warning light, which will illuminate when the fuel tank is nearly empty.

On inclines or curves, the fuel gauge pointer may fluctuate or the low fuel warning light may come on earlier than usual due to the movement of fuel in the tank.

✻ NOTICE - Fuel gauge

Running out of fuel can expose vehicle occupants to danger. You must stop and obtain additional fuel as soon as possible after the warning light comes on or when the gauge indicator comes close to the "E (Empty)" level.

⚠ CAUTION - Low fuel

Avoid driving with an extremely low fuel level. Running out of fuel could cause the engine to misfire, damaging the catalytic converter.

✻ NOTICE

The fuel display may not be accurate if the vehicle is on an incline.

Odometer

OBD048110

Odometer

The odometer indicates the total distance the vehicle has been driven.

You will also find the odometer useful to determine when periodic maintenance should be performed.

- Odometer range :

  0 ~ 1,599,999 km or 0 ~ 999,999 miles.

Outside Temperature Gauge

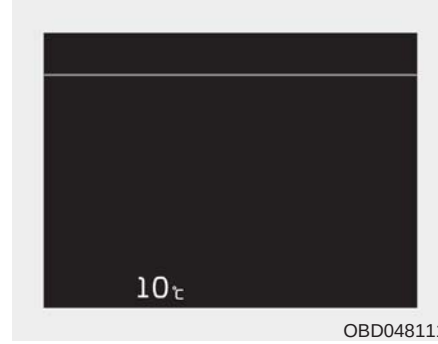

OBD048111

This gauge indicates the current outside air temperatures by 1°C (1°F).

- Temperature range :

  -40°C ~ 85°C (- 40°F ~ 211°F)

The outside temperature on the display may not change immediately like a general thermometer to prevent the driver from being inattentive.

To change the temperature unit (from °C to °F or from °F to °C)

• Type A Cluster

Press the TRIP button for 5 seconds and more.

• Type B, C Cluster

The temperature unit can be changed by using the “User Settings” mode of the LCD Windows.

❊ For more details, refer to “LCD Windows” in this chapter.

Transmission Shift Indicator

Intelligent Variable Transmission (if equipped)

OBD048136L

This indicator displays which intelligent variable transmission shift lever mode is selected.

- Park : P
- Reverse : R
- Neutral : N
- Drive : D
- Sports Mode : 1, 2, 3, 4, 5, 6

Manual transmission shift indicator (if equipped)

OBD048137L

This indicator informs which gear is desired while driving to save fuel.

- Shifting up : ▲2, ▲3, ▲4, ▲5, ▲6
- Shifting down : ▼1, ▼2, ▼3, ▼4, ▼5

For example

▲3: Indicates that shifting up to the 3rd gear is desired (currently the shift lever is in the 2nd or 1st gear).

▼4: Indicates that shifting down to the 4th gear is desired (currently the shift lever is in the 5th or 6th gear).

When the system is not working properly, the indicator is not displayed.

Dual clutch transmission shift indicator (if equipped)

OBD048139L

This indicator displays which shift lever mode is selected.

- Park : P
- Reverse : R
- Neutral : N
- Drive : D1, D2, D3, D4, D5, D6, D7
- Sports Mode : S1, S2, S3, S4, S5, S6, S7

LCD WINDOWS (IF EQUIPPED)

Over view

OBD048156L

LCD windows show the following various information to drivers.

- Trip information
- LCD modes
- Warning messages

Trip information (Trip computer)

The trip computer is a microcomputer-controlled driver information system that displays information related to driving.

✻ NOTICE

Some driving information stored in the trip computer (for example Average Fuel Economy) resets if the battery is disconnected.

Distance to empty

■ Type A

OBD048159L

■ Type B

OBD048142L

- The distance to empty is the estimated distance the vehicle can be driven with the remaining fuel.
  - Distance range: 1 ~ 9,9999 km or 1 ~ 9,999 mi.

- If the estimated distance is below 1 km (1 mi.), the trip computer will display "---" as distance to empty.

✻ NOTICE

- **If the vehicle is not on level ground or the battery power has been interrupted, the distance to empty function may not operate correctly.**
- **The distance to empty may differ from the actual driving distance as it is an estimate of the available driving distance.**
- **The trip computer may not register additional fuel if less than 6 liters (1.6 gallons) of fuel are added to the vehicle.**
- **The fuel economy and distance to empty may vary significantly based on driving conditions, driving habits, and condition of the vehicle.**

Trip Modes

- For type A cluster

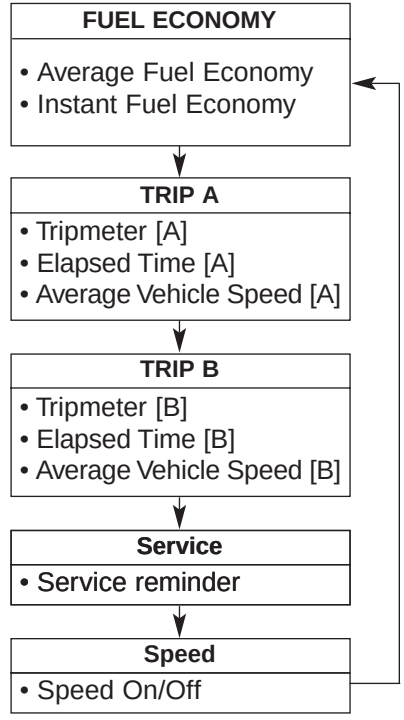

To change the trip mode, press the TRIP button.

- For type B, C cluster

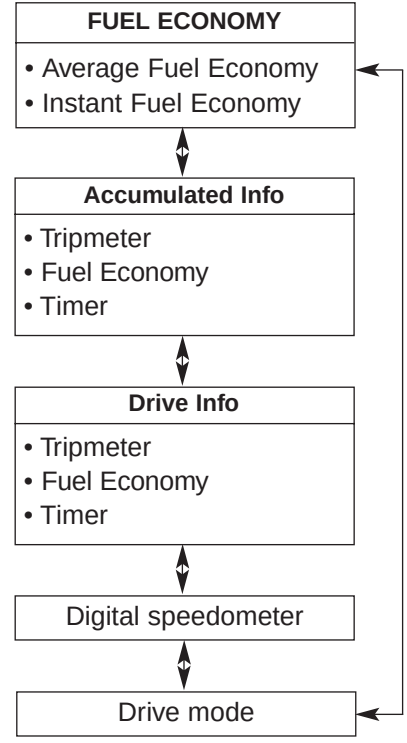

To change the trip mode, scroll the MOVE scroll switch (∧/∨) or press the TRIP button in the trip computer mode.

Trip A/B (For type A cluster)

OBD048158L

Tripmeter (1)

- The tripmeter is the total driving distance since the last tripmeter reset.
  - Distance range : 0 ~ 1599999 km or 0 ~ 999999 mi.
- To reset the tripmeter, press the RESET button on the steering wheel for more than 1 second when the tripmeter is displayed.
  - 4 hours after the ignition is turned off, the tripmeter will be reset automatically.

Elapsed Time (2)

- The elapsed time is the total driving time since the last elapsed time reset.
  - Time range (hh:mm) : 00:00 ~ 99:59
- To reset the elapsed time, press the RESET button on the steering wheel for more than 1 second when the elapsed time is displayed.

✻ NOTICE

Even if the vehicle is not in motion, the elapsed time keeps going while the engine is running.

Average Vehicle Speed (3)

- The average vehicle speed is calculated by the total driving distance and driving time since the last average vehicle speed reset.
  - Speed range : 0 ~ 250 km/h or MPH
- To reset the average vehicle speed, press the RESET button on the steering wheel for more than 1 second when the average vehicle speed is displayed.

✻ NOTICE

- **The average vehicle speed is not displayed if the driving distance is less than 300 meters (0.2 miles) or the driving time is less than 10 seconds since the ignition switch is turned to ON.**
- **Even if the vehicle is not in motion, the average vehicle speed keeps going while the engine is running.**

Fuel Economy

■ Type A

OBD048160L

■ Type B

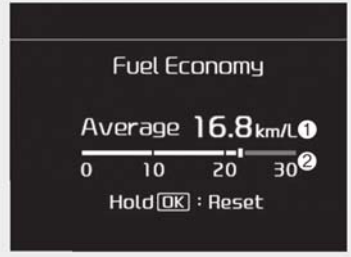

OBD048143L

Average Fuel Economy (1)

- The average fuel economy is calculated by the total driving distance and fuel consumption since the last average fuel economy reset.
  - Fuel economy range: 0 ~ 99.9 km/L, L/100 km or MPG
- The average fuel economy can be reset both manually and automatically.

✻ NOTICE

Fuel economy may vary significantly based on driving conditions, driving habits, and condition of the vehicle.

Manual reset

To clear the average fuel economy manually, press the RESET or OK button on the steering wheel for more than 1 second when the average fuel economy is displayed.

Automatic reset
(For type B, C cluster)

To make the average fuel economy be reset automatically whenever refueling, select the “Fuel economy auto reset” mode in the User Setting menu of the LCD Windows (Refer to “LCD Windows”).

- OFF - You may set to default manually by using the trip switch reset button.
- After ignition - The vehicle will automatically set to default once 4 hours pass after the Ignition is in OFF.
- After refueling - After refueling more than 6 liters (1.6 gallons) and driving over 1 km/h (1 mph), the vehicle will reset to default automatically.
  - 4 hours after the ignition is turned off, the tripmeter will be reset automatically.

✻ NOTICE

The average fuel economy is not displayed for more accurate calculation if the vehicle does not drive more than 10 seconds or 50 meters (0.03 miles) since the ignition switch or Engine Start/Stop button is turned to ON.

Instant Fuel Economy (2)

- This mode displays the instant fuel economy during the last few seconds when the vehicle speed is more than 10km/h (6.2 MPH).
  - Fuel economy range:
    0.0 ~ 30 km/L , L/100km or 0.0 ~ 50.0 MPG

⚠ **CAUTION**

Avoid driving with an extremely low fuel level (with the fuel level below "E" or with the fuel warning light on). Running out of fuel could cause the engine to misfire, damaging the catalytic converter (if equipped).

Accumulated driving information mode (For type B, C cluster)

OBDM048410C

Displays accumulated information starting from a mileage/fuel efficiency/time default point.

- Accumulated information is calculated after the vehicle has run for more than 300 meters (0.18 miles).
- If you press the "OK" button for more than 1 second after the Cumulative Information is displayed, the information will be reset.
- If the engine is running, even when the vehicle is not in motion, the information will be accumulated.

One time driving information mode (For type B, C cluster)

OBDM048410C

The vehicle will display Driving Information once per once per each ignition cycle.

- Fuel efficiency is calculated after the vehicle has run for more than 300 meters (0.18 miles).
- The Driving Information will be reset 4 hours after the ignition has been turned off. So, if the vehicle ignition is turned on within 4 hours, the information will not be reset.

- If you press the "OK" button for more than 1 second after the Driving Information is displayed, the information will be reset.
- If the engine is running, the information will be accumulated even when the vehicle is not in motion.

Digital speedometer

OBD048146L

This mode displays the current speed of the vehicle.

LCD Modes (For type B, C cluster)

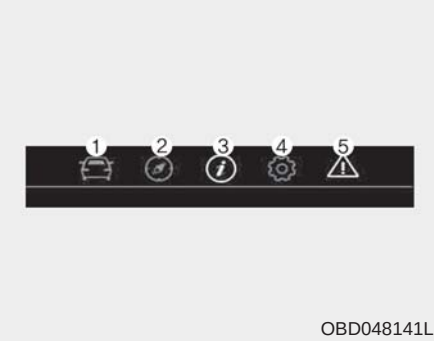

OBD048141L

(1) Trip Computer mode

This mode displays driving information like the tripmeter, fuel economy, and so on.

❈ For more details, refer to “Trip Computer” in this chapter.

(2) Turn By Turn mode(if equipped)

This mode displays “turn by turn” instructions from the navigation system.

(3) Assist mode

- ⓘ : This mode displays the state of tire pressure.

(4) User Setting mode

On this mode, you can change the settings of the doors, lamps and so on.

(5) Master warning mode

This mode informs of warning messages related to the below functions.

- Blind-Spot Collision Warning (BCW) malfunction (if equipped)
- Blind-Spot Collision Warning (BCW) radar blind (if equipped)
- Cruise Control system malfunction (if equipped)
- Lamp malfunction
- LED head lamp malfunction (if equipped)
- Engine oil shortage

❊ For controlling the LCD modes, refer to “LCD window Control” in this chapter.

Service Mode

Service in

It calculates and displays (in mileage or days) when you need a scheduled maintenance service.

If the remaining mileage or time reaches 1,500 km (900 mi.) or 30 days, a “Service in” message is displayed for several seconds each time you set the ignition switch or Engine Start/Stop Button to the ON position.

Service required

If you do not have your vehicle serviced according to the already inputted service interval, a “Service required” message is displayed for several seconds each time you set the ignition switch or Engine Start/Stop Button to the ON position.

To reset the service interval to the mileage and days you inputted before:

- Press the RESET or OK button for more than 1 second.

❊ NOTICE

If any of the following conditions occurs, the mileage and days may be incorrect.

- The battery cable is disconnected.
- The battery is discharged.

User Settings Mode (For type B, C cluster)

On this mode, you can change setting of the doors, lamps, and so on.

⚠ WARNING

Do not adjust the User Setting while driving. You may lose your steering control and cause severe personal injury or accidents.

Shift to P to edit settings/Engage parking brake to edit settings

A warning message appears if you try to adjust the User Settings while driving.

- Dual clutch transmission/Intelligent variable transmission

For your safety, change the User Settings after parking the vehicle, applying the parking brake and moving the shift lever to P (Park).

- Manual transmission

For your safety, change the User Settings after engaging the parking brake.

Driver Assistance(if equipped)

- Lane Safety (if equipped) :
  - Lane Departure Warning : To activate the lane departure warning function.
  - Standard LKA (Lane Keeping Assist) : To activate the standard LKA mode.
  - Active LKA : To activate the active LKA mode.

❊For more details, refer to the “LKA (Lane Keeping Assist)” section in Chapter 5.

- Driver Attention Warning : Choose the alert stage (Off/Normal/High stage) of the Driver Attention Warning.

- Forward Collision-Avoidance Assist (FCA, if equipped) :
  - To activate or deactivate the FCA system.

❊For more details, refer to the “Forward Collision-Avoidance Assist (FCA)” section in Chapter 5.

- Forward Collision Warning (FCW, if equipped)
  - Choose the sensitivity of the forward collision warning.

    (Late/Normal/Early)

❊For more details, refer to the "Forward Collision Warning (FCW)" section in Chapter 5.

- Blind Spot Collision Warning Sound (if equipped)
  - If this item is checked, the blind spot collision warning sound function will be activated.

❊For more details, refer to the "Blind-spot Collision Warning" section in Chapter 5.

Door

- Automatically Lock :
  - Enable on Speed : All doors will be automatically locked when the vehicle speed exceeds 15 km/h (9.3 mph).
  - Enable on Shift : All doors will be automatically locked if the intelligent variable transmission shift lever is shifted from the P (Park) position to the R (Reverse), N (Neutral), or D (Drive) position.
- Automatically Unlock :
  - Disable : The auto door unlock operation will be canceled.
  - On key out : All doors will be automatically unlocked when the Engine Star/Stop Button or ignition switch is set to the OFF position.
  - On Shift to P : All doors will be automatically unlocked if the intelligent variable transmission shift lever is shifted to the P (Park) position.
- Smart trunk (if equipped)
  - If this item is checked, the smart trunk function will be activated.

❊For more details, refer to the "Smart trunk" section in this chapter.

- Two Press Unlock (if equipped)
  - If this item is checked, the two press unlock function will be activated. (Only the driver's door will unlock when the unlock button is pressed once and all doors will unlock when the same button is pressed again within 4 seconds.)
- Horn Feedback (if equipped)
  - Off:

    The Horn feedback operation will be deactivated.
  - On:

    After locking the door by pressing the lock button on the transmitter, if you press the lock button again within 4 seconds, the warning sound will operate once to indicate that all doors are locked.

Lights

- One Touch Turn Signal
  - Off : The one touch turn signal function will be deactivated.
  - 3, 5, 7 Flashes : The lane change signals will blink 3, 5, or 7 times when the turn signal lever is moved slightly.

❊For more details, refer to the “Light” section in this chapter.

- Head Lamp Delay
  - If this item is checked, the head lamp delay function will be activated.

Sound

- Volume for Parking Distance Warning (if equipped)
  - Adjust the Parking distance warning volume. (Level 1 ~ 3)

❊For more details, refer to the “Parking distance warning System” section in this chapter.

- Welcome Sound (if equipped) :
  - If this itemis is checked, the welcome sound function will be activated.

Convenience

- Welcome Mirror/Light (if equipped) :
  - If this item is checked, the welcome Mirror/light function will be activated.
- Wireless Charging System (if equipped) :
  - If this item is checked, the wireless charging system function will be activated.
- Wiper/Light Display (if equipped) :
  - If this item is checked, the Wiper/Light Display will be activated.
- Gear position pop-up (if equipped) : To activate or deactivate the gear position pop-up. When activated, the gear position will be displayed in the cluster LCD display.
- Icy road warning (if equipped) : If this item is checked, the Icy road warning display will be activated.

Service interval

- Enable Service Interval

  To activate or deactivate the service interval function.

- Adjust Interval

  To adjust the interval by mileage and time period.

- Reset

  To reset the service interval function.

Other Features

- Fuel Economy Auto Reset
  - Off : The average fuel economy will not reset automatically whenever refueling.
  - After Ignition : When the engine has been OFF for 4 hours or longer, the average fuel economy will reset automatically.
  - After Refueling : The average fuel economy will reset automatically after adding 6 liters (1.6 gallons) of fuel or more and after driving speed exceeds 1 km/h (1.6 mph).

- Fuel Economy Unit
  - Choose the fuel economy unit. (US gallon/UK gallon)

- Temperature Unit
  - Choose the temperature unit. (°C,°F)

- Tire Pressure Unit (if equipped)
  - Choose the tire pressure unit. (psi, kPa, bar)

Language

Choose the language

Reset

You can reset the menus in the User Settings Mode. All menus in the User Settings Mode are initialized, except language and service interval.

Warning messages (if equipped)

Warning messages appear on the LCD to warn the driver. It is located in the center of the instrument cluster.

The warning message may appear differently depending on the type of instrument cluster and some may not show the warning message at all.

The warning message is shown in either symbol, symbol and text, or text type only. You can choose the preferred language by selecting the User setting menu in LCD mode.

OBD048123

Door, hood, trunk open

- This warning is displayed indicating which door, the hood, the trunk is open.

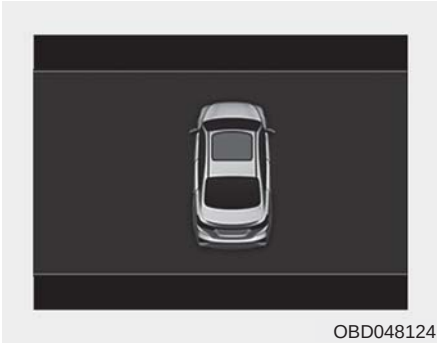

OBD048124

Sunroof Open (if equipped)

- This warning is displayed if you turn off the engine when the sunroof is open.

Engine has overheated

This warning message illuminates when the engine coolant temperature is above 120°C (248°F). This means that the engine is overheated and may be damaged.

❊If your vehicle is overheated, refer to the “Overheating” section in Chapter 6.

Shift to P (for smart key system)

- This warning message illuminates if you try to turn off the engine without the shift lever in the P (Park) position.
- In this situation, the Engine Start/Stop Button turns to the ACC position (If you press the Engine Start/Stop Button once more, it will turn to the ON position).

Low Key Battery (for smart key system)

- This warning message illuminates if the battery of the smart key is discharged when the Engine Start/Stop Button changes to the OFF position.

Press START button while turn steering (for smart key system)

- This warning message illuminates if the steering wheel does not unlock normally when the Engine Start/Stop Button is pressed.
- It means that you should press the Engine Start/Stop Button while turning the steering wheel right and left.

Steering wheel unlocked (for smart key system)

- This warning message illuminates if the steering wheel does not lock when the Engine Start/Stop Button changes to the OFF position.

Check Steering Wheel Lock System (for smart key system)

- This warning message illuminates if the steering wheel does not lock normally when the Engine Start/Stop Button changes to the OFF position.

Check power steering (if equipped)

- This warning message illuminates when there is a malfunction with EPS.

Press brake pedal to start engine (for smart key system)

- This warning message illuminates if the Engine Start/Stop Button is pressed repeatedly without depressing the brake pedal.
- It means that you should depress the brake pedal to start the engine.

Press clutch pedal to start engine (for smart key system and manual transmission)

- This warning message illuminates if the Engine Start/Stop Button is pressed repeatedly without depressing the clutch pedal.
- It means that you should depress the clutch pedal to start the engine.

Key not in vehicle (for smart key system)

- This warning message illuminates if the smart key is not in the vehicle when you press the Engine Start/Stop Button.
- It means that you should always have the smart key with you.

Key not detected (for smart key system)

- This warning message illuminates if the smart key is not detected when you press the Engine Start/Stop Button.

Check high beam assist system (if equipped)

- This warning message illuminates if there is a malfunction (burned-out bulb or circuit malfunction) with the headlamp. In this case, have your vehicle inspected by an authorized Kia dealer.

Press START button again (for smart key system)

- This warning message illuminates if there is a problem with the Engine Start/Stop button system.
- In this situation, you may be able to start the engine by pressing the Engine Start/Stop Button once more.
- If the warning illuminates each time you press the Engine Start/Stop Button, have your vehicle inspected by an authorized Kia dealer.

Press START button with smart key (for smart key system)

- This warning message illuminates if you press the Engine Start/Stop Button while the warning message “Key not detected” is illuminating.
- In this situation, the immobilizer indicator light blinks.

Check fuse “BRAKE SWITCH” (for smart key system)

- This warning message illuminates if the brake switch fuse is disconnected.
- It means that you should replace the fuse with a new one. If that is not possible, you can start the engine by pressing the Engine Start/Stop Button for 10 seconds in the ACC position.

Shift to P or N to start engine (for smart key system)

- This warning message illuminates if you try to start the engine with the shift lever not in the P (Park) or N (Neutral) position.

✻ NOTICE

You can start the engine with the shift lever in the N (Neutral) position. But, for your safety, we recommend that you start the engine with the shift lever in the P (Park) position.

Check Forward Collision Avoidance Assist system (if equipped)

- This warning message illuminates if there is a malfunction with the Forward Collision Avoidance Assist (FCA) system. In this situation, have your vehicle inspected by an authorized Kia dealer.

✻For more details, refer to the “Forward Collision-Avoidance Assist (FCA) system” section in Chapter 5.

Icy Road Warning (if equipped)

OBD048157L

This warning is to warn the driver the road may be icy.

When the following conditions occur, the warning light (including Outside Temperature Gauge) blinks 5 times and then illuminates, and also a warning chime sounds once.

- The temperature on the Outside Temperature Gauge is below approximately 4°C (40°F).

✻ NOTICE

If the icy road warning appears while driving, you should drive more attentively and refrain from speeding, rapid acceleration, sudden braking, and sharp turns.

WARNING AND INDICATOR LIGHTS

Warning lights

✻ NOTICE - Warning lights

Make sure that all warning lights are OFF after starting the engine. If any light is still ON, this indicates a situation that needs attention.

Air bag Warning Light

This warning light illuminates:

- Once you set the ignition switch or Engine Start/Stop Button to the ON position.
  - It illuminates for approximately 6 seconds and then goes off.
- When there is a malfunction with the SRS.

  In this situation, have your vehicle inspected by an authorized Kia dealer.

Seat Belt Warning Light

This warning light informs the driver that the seat belt is not fastened.

✻ For more details, refer to the “Seat Belts” section in Chapter 3.

Parking Brake & Brake Fluid Warning Light

This warning light illuminates:

- Once you set the ignition switch or Engine Start/Stop Button to the ON position.
  - It illuminates for approximately 3 seconds
  - It remains on if the parking brake is applied.
- When the parking brake is applied.
- When the brake fluid level in the reservoir is low.
  - If the warning light illuminates with the parking brake released, it indicates the brake fluid level in the reservoir is low.

If the brake fluid level in the reservoir is low:

1. Drive carefully to the nearest safe location and stop your vehicle.
2. With the engine stopped, check the brake fluid level immediately and add fluid as required (For more details, refer to the “Brake Fluid” section in Chapter 7).

   Then check all brake components for fluid leaks. If any leak on the brake system is still found, the warning light remains on, or the brakes do not operate properly, do not drive the vehicle.

   In this situation, have your vehicle towed to an authorized Kia dealer and inspected.

Dual-diagonal braking system

Your vehicle is equipped with dual-diagonal braking systems. This means you still have braking on two wheels even if one of the dual systems should fail.

If one system fails, increased pedal travel and greater pedal pressure will be required to stop the vehicle.

Vehicle will require increased stooping short a distance with only a portion of the brake system working.

If the brakes fail while you are driving, shift to a lower gear for additional engine braking and stop the vehicle as soon as it is safe to do so.

Driving the vehicle with a warning light ON is dangerous. If the Parking Brake & Brake Fluid Warning Light illuminates with the parking brake released, it indicates that the brake fluid level is low.

In this situation, have your vehicle inspected by an authorized Kia dealer.

Anti-lock Brake System (ABS) Warning Light

This warning light illuminates:

- Once you set the ignition switch or Engine Start/Stop Button to the ON position.
  - It illuminates for approximately 3 seconds and then goes off.
- When there is a malfunction with the ABS (The normal braking system will still be operational without the assistance of the anti-lock brake system).

  In this situation, have your vehicle inspected by an authorized Kia dealer.

Electronic Brake force Distribution (EBD) System Warning Light

These two warning lights illuminate at the same time while driving:

- When the ABS and regular brake system may not work normally.

  In this situation, have your vehicle inspected by an authorized Kia dealer.

⚠ WARNING - ABS/Brake Light

When both ABS and Parking Brake & Brake Fluid Warning Lights are on, the brake system may not work normally and you may experience an unexpected and dangerous situation during sudden braking thereby increasing the risk of a crash or injury.

In this case, avoid high speed driving and abrupt braking. Have your vehicle inspected by an authorized Kia dealer as soon as possible.

✻ NOTICE - Electronic Brake force Distribution (EBD) System Warning Light

When the ABS Warning Light is on or both ABS and Parking Brake & Brake Fluid Warning Lights are on, the speedometer, odometer, or trip-meter may not work. Also, the EPS Warning Light may illuminate and the steering effort may increase or decrease.

In this situation, have your vehicle inspected by an authorized Kia dealer as soon as possible.

Electronic Power Steering (EPS) Warning Light (if equipped)

This warning light illuminates:

- Once you set the ignition switch or Engine Start/Stop Button to the ON position.
  - It remains on until the engine is started.
- When there is a malfunction with the EPS.

  In this situation, have your vehicle inspected by an authorized Kia dealer.

Malfunction Indicator Lamp (MIL)

This warning light illuminates:

- Once you set the ignition switch or Engine Start/Stop Button to the ON position.
  - It remains on until the engine is started.
- When there is a malfunction with the emission control system.

  In this situation, have your vehicle inspected by an authorized Kia dealer.

⚠ CAUTION - Gasoline Engine

If the Malfunction Indicator Lamp (MIL) illuminates, potential catalytic converter damage is possible, which could result in loss of engine power.

In this situation, have your vehicle inspected by an authorized Kia dealer as soon as possible.

⚠ CAUTION - Malfunction Indicator Lamp (MIL)

Driving with the Malfunction Indicator Lamp (MIL) on may cause damage to the emission control systems, which could affect drivability and/or fuel economy.

Charging System Warning Light

This warning light illuminates:

- Once you set the ignition switch or Engine Start/Stop Button to the ON position.
  - It remains on until the engine is started.
- When there is a malfunction with either the alternator or electrical charging system.

If there is a malfunction with either the alternator or electrical charging system:

1. Drive carefully to the nearest safe location and stop your vehicle.
2. Turn the engine off and check the alternator drive belt for looseness or breakage.

   If the belt is adjusted properly, there may be a problem in the electrical charging system.

   In this situation, have your vehicle inspected by an authorized Kia dealer as soon as possible.

Engine Oil Pressure Warning Light

This warning light illuminates:

- Once you set the ignition switch or Engine Start/Stop Button to the ON position.
  - It remains on until the engine is started.
- When the engine oil pressure is low.

If the engine oil pressure is low:

1. Drive carefully to the nearest safe location and stop your vehicle.
2. Turn the engine off and check the engine oil level (For more details, refer to the “Engine Oil” section in Chapter 8). If the level is low, add oil as required.

   If the warning light remains on after adding oil or if oil is not available, have your vehicle inspected by an authorized Kia dealer as soon as possible.

⚠ CAUTION - Engine damage

If the engine is not stopped immediately after the engine oil pressure warning light is illuminated and stays on while the engine is running, serious engine damage may result.

⚠ CAUTION - Engine overheating

Do not continue driving with the engine overheated. Otherwise, the engine may be damaged.

If the warning light stays on while the engine is running, there may be serious engine damage. In this case,

1. Stop the vehicle as soon as it is safe to do so.
2. Turn off the engine and check the oil level. If the oil level is low, fill the engine oil to the proper level.
3. Start the engine again. If the warning light stays on after the engine is started, turn the engine off immediately. In this situation, have your vehicle inspected by an authorized Kia dealer.

Low Fuel Level Warning Light

This warning light illuminates:

When the fuel tank is nearly empty.

If the fuel tank is nearly empty:

Add fuel as soon as possible.

⚠ **CAUTION - Low Fuel Level**

Driving with the Low Fuel Level warning light on or with the fuel level below "E" can cause the engine to misfire and damage the catalytic converter (if equipped).

Low Tire Pressure Warning Light

This warning light illuminates:

- Once you set the ignition switch or Engine Start/Stop Button to the ON position.
  - It illuminates for approximately 3 seconds and then goes off.
- When one or more of your tires are significantly underinflated.

❊For more details, refer to the "Tire Pressure Monitoring System (TMPS)" section in Chapter 6.

This warning light remains on after blinking for approximately 60 seconds or repeats blinking on and off at intervals of approximately 3 seconds:

- When there is a malfunction with the TPMS.

  In this situation, have your vehicle inspected by an authorized Kia dealer as soon as possible.

❊For more details, refer to the “Tire Pressure Monitoring System (TMPS)” section in Chapter 6.

⚠ WARNING
- Low tire pressure

- **Significantly low tire pressure makes the vehicle unstable and can contribute to loss of vehicle control and increased braking distances.**
- **Continued driving on tires with low tire pressure can cause the tires to overheat and fail, which may cause an accident.**

The TPMS cannot alert you to severe and sudden tire damage caused by external factors.

If you notice any vehicle instability, immediately take your foot off the accelerator pedal, apply the brakes gradually with light force, and slowly move to a safe position off the road.

Door Ajar Warning Light (if equipped)

This warning light illuminates:

When a door is not closed securely.

Trunk Open Warning Light (if equipped)

This warning light illuminates:

When the trunk is not closed securely.

LED Headlamp Warning Light (if equipped)

This warning light illuminates:

- Once you set the Engine Start/Stop Button to the ON position.
  - It illuminates for approximately 3 seconds and then goes off.
- When there is a malfunction with the LED headlamp.

In this situation, have the vehicle inspected by an authorized Kia dealer.

This warning light blinks:

- When there is a malfunction with a LED headlamp related part.

In this situation, have the vehicle inspected by an authorized Kia dealer.

✻ NOTICE

Continuous driving with the LED Headlamp Warning Light on or blinking can reduce LED headlamp (low beam) life.

Washer Fluid Warning Light (if equipped)

This warning light illuminates:

- When the washer fluid level in the reservoir is nearly empty.

  In this situation, you should refill the washer fluid.

Hood open warning light (if equipped)

This warning light blinks:

- When the hood warning light will appear on the LCD display when the hood is open.

  The warning chime will operate when the vehicle is being driven at or above 2 mph (3 km/h) with the hood open.

Sunroof open warning light (if equipped)

This warning light blinks:

- If the driver removes the ignition key and opens the driver-side door when the sunroof is not fully closed, the warning chime will sound for a few seconds and a warning light will appear on the LCD display.

  Close the sunroof securely when leaving your vehicle.

Ice Warning Light (if equipped)

This warning light blinks 5 times and then illuminates, and a warning chime also sounds 1 time:

- When the temperature on the Outside Temperature Gauge is below approximately 4°C (39.2°F) with the ignition switch or Engine Start/Stop button in the ON position.

✻ NOTICE

If the ice warning light appears while driving, you should drive more attentively and safely refraining from over-speeding, rapid acceleration, sudden braking or sharp turning, etc.

Forward Collision-avoidance Assist Warning light (FCA, if equipped)

This indicator light illuminates:

- When there is a malfunction with the FCA.

In this situation, have the vehicle inspected by an authorized Kia dealer.

Master Warning Mode (if equipped)

- This warning light informs the driver of the following situations:
  - LED head lamp malfunction (if equipped)
  - Forward Collision-Avoidance Assist malfunction (if equipped)
  - Blind-Spot Collision Warning radar blind (if equipped)
  - Lamp malfunction
  - High Beam Assist malfunction (if equipped)

The Master Warning Light illuminates when more than one of the above warning situations occur.

If the warning situation is solved, the master warning light will be turned off.

Indicator Lights

Electronic Stability Control (ESC) Indicator Light

This indicator light illuminates:

- Once you set the ignition switch or Engine Start/Stop Button to the ON position.
  - It illuminates for approximately 3 seconds and then goes off.
- When there is a malfunction with the ESC system.

  In this situation, have your vehicle inspected by an authorized Kia dealer.

This indicator light blinks:

While the ESC is operating.

❊For more details, refer to the “Electronic Stability Control (ESC)” section in Chapter 5.

Electronic Stability Control (ESC) OFF Indicator Light

This indicator light illuminates:

- Once you set the ignition switch or Engine Start/Stop Button to the ON position.
  - It illuminates for approximately 3 seconds and then goes off.
- When you deactivate the ESC system by pressing the ESC OFF button.

❊For more details, refer to refer to the “Electronic Stability Control (ESC)” section in Chapter 5.

Immobilizer Indicator Light (Without Smart Key)

This indicator light illuminates:

- When the vehicle detects the immobilizer in your key while the ignition switch is ON.
  - At this time, you can start the engine.
  - The indicator light goes off after starting the engine.

This indicator light blinks:

- When there is a malfunction with the immobilizer system.

  In this situation, have your vehicle inspected by an authorized Kia dealer.

Immobilizer Indicator Light (With Smart Key)

This indicator light illuminates for up to 30 seconds:

- When the vehicle detects the smart key in the vehicle properly while the Engine Start/Stop Button is ACC or ON.
  - At this time, you can start the engine.
  - The indicator light goes off after starting the engine.

This indicator light blinks for a few seconds:

- When the smart key is not in the vehicle.
  - In this situation, you can not start the engine.

This indicator light illuminates for 2 seconds and goes off:

- When the vehicle can not detect a smart key which is in the vehicle while the Engine Start/Stop Button is ON.

  In this situation, have your vehicle inspected by an authorized Kia dealer.

This indicator light blinks:

- When the battery of the smart key is weak.
  - In this situation, you can not start the engine. However, you can start the engine if you press the Engine Start/Stop Button with the smart key. (For more details, refer to the “Starting the Engine” section in Chapter 6.).
- When there is a malfunction with the immobilizer system.

  In this situation, have your vehicle inspected by an authorized Kia dealer.

Turn Signal Indicator Light

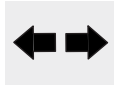

This indicator light blinks:

- When you turn the turn signal light on.

If any of the following occurs, there may be a malfunction with the turn signal system. In this situation, have your vehicle inspected by an authorized Kia dealer.

- The indicator light does not blink but illuminates.
- The indicator light blinks more rapidly.
- The indicator light does not illuminate at all.

High Beam Indicator Light

This indicator light illuminates:

- When the headlights are on and in the high beam position
- When the turn signal lever is pulled into the Flash-to-Pass position.

Light ON Indicator Light

This indicator light illuminates:

- When the tail lights or headlights are on.

Front Fog Indicator Light (if equipped)

This indicator light illuminates:

- When the front fog lights are on.

Low Beam Indicator Light (if equipped)

This indicator light illuminates:

- When the headlights are on.

High beam assist indicator (if equipped)

This warning light illuminates :

- When the high-Beam is on with the light switch in the AUTO light position.
- If your vehicle detects oncoming or preceding vehicles, the High beam assist system will switch the high beam to low beam automatically.

❊For more details, refer to the “High beam assist” section in this chapter.

Cruise Indicator Light (if equipped)

This indicator light illuminates:

- When the cruise control system is enabled.

❊For more details, refer to the “Cruise Control System” section in Chapter 5.

SPORT Mode Indicator Light (if equipped)

This indicator light illuminates:

- When you select “SPORT” mode as drive mode.

❊For more details, refer to the “Drive Mode Integrated Control System” section in Chapter 5.

SMART Mode Indicator (if equipped)

This indicator light illuminates:

- When you select “SMART” mode as drive mode.

❊For more details, refer to the “Drive Mode Integrated Control System” section in Chapter 5.

LKA(Lane Keeping Assist) indicator (if equipped)

The LKA indicator will illuminate when you turn the lane keeping assistant system on by pressing the LKA button.

If there is a problem with the system, the yellow LKA indicator will illuminate.

❊For more details, refer to the “Lane Keeping Assist” section in Chapter 5.

⚠ WARNING - Distracted driving

Driving while distracted can result in a loss of vehicle control that may lead to an accident, severe personal injury, and death. The driver's primary responsibility is in the safe and legal operation of a vehicle, and use of any handheld devices, other equipment, or vehicle systems which take the driver's eyes, attention and focus away from the safe operation of a vehicle or which are not permissible by law should never be used during operation of the vehicle.

KEY OUT Indicator Light (if equipped)

KEY OUT

When the ENGINE START/STOP button is in the ACC or ON position, and if any door is open, the system checks for the smart key.

This indicator light blinks:

When the smart key is not in the vehicle and any door is open with the ignition switch or Engine Start/Stop button in the ACC or ON position.

- In this situation, if you close all doors, the chime will also sound for approximately 5 seconds.
- The indicator will go off while the vehicle is moving

REVERSE PARKING DISTANCE WARNING (IF EQUIPPED)

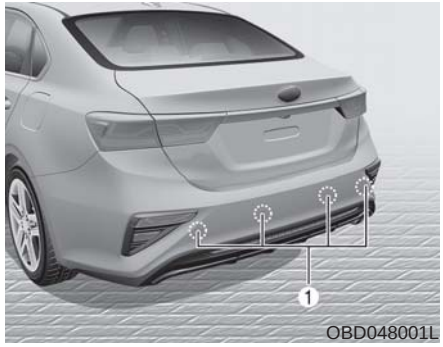

OBD048001L

The reverse parking distance warning assists the driver during backward movement of the vehicle by chiming if any object is sensed within a distance of 120 cm (47 in.) behind the vehicle.

This system is a supplemental system and is not intended to, nor does it, replace the need for the driver's extreme care and attention. The sensing range and objects detectable by the back sensors (①) are limited. Whenever backing-up, pay as much attention to what is behind you as you would in a vehicle without a reverse parking distance warning.

⚠ WARNING - Reverse parking distance warning

Never rely solely on the reverse parking distance warning. Always perform a visual inspection to make sure the vehicle is clear of all obstructions before moving the vehicle in any direction. Stop immediately if you are aware of a child anywhere near your vehicle. Some objects may not be detected by the sensors, due to the object's size or material.

Operation of the reverse parking distance warning

Operating condition

- This system will activate when backing up with the ignition switch ON.

  If the vehicle is moving at a speed over 5 km/h (3 mph), the system may not be activated correctly.
- The sensing distance while the back-up warning system is in operation is approximately 120 cm (47 in.) at the rear bumper center area, and 60 cm (23.5 in.) at the rear bumper side area.
- When more than two objects are sensed at the same time, the closest one will be recognized first.

Types of warning sound

- When an object is 120 cm to 61 cm (47 in. to 24 in.) from the rear bumper: Buzzer beeps intermittently.
- When an object is 60 cm to 31 cm (24 in. to 12 in.) from the rear bumper: Buzzer beeps more frequently.
- When an object is within 30 cm (12 in.) of the rear bumper:

  Buzzer sounds continuously.

Non-operational conditions of reverse parking distance warning

The reverse parking distance warning may not operate properly when:

1. Moisture is frozen to the sensor. (It will operate normally once the moisture clears.)
2. The sensor is covered with foreign matter, such as snow or water, or the sensor cover is blocked. (It will operate normally when the material is removed or the sensor is no longer blocked.)
3. Driving on uneven road surfaces (unpaved roads, gravel, bumps, gradients, etc.).
4. Objects generating excessive noise (vehicle horns, loud motorcycle engines, or truck air brakes) are within range of the sensor.
5. Rain or water spray exists.
6. Wireless transmitters or mobile phones are within range of the sensor.
7. The sensor is covered with snow.
8. Trailer towing

The detecting range may decrease when:

1. The sensor is covered with foreign matter such as snow or water. (The sensing range will return to normal when removed.)
2. Outside air temperature is extremely hot or cold.

The following objects may not be recognized by the sensor:

1. Sharp or slim objects such as ropes, chains or small poles.
2. Objects which tend to absorb the sensor frequency such as clothes, sound absorbent material or snow.
3. Undetectable objects smaller than 1 m (40 in.) in height and narrower than 14 cm (6 in.) in diameter.

reverse parking distance warning precautions

- The reverse parking distance warning system may not sound consistently depending on the speed and shapes of the objects detected.
- The reverse parking distance warning system may malfunction if the vehicle bumper height or sensor installation has been modified or damaged. Any non-factory installed equipment or accessories may also interfere with the sensor performance.
- The sensor may not recognize objects less than 40 cm (15 in.) from the sensor, or it may sense an incorrect distance. Use caution.
- When the sensor is frozen or covered with snow, dirt, or water, the sensor may be inoperative until the material is removed using a soft cloth.
- To prevent damage, do not push, scratch or strike the sensor.

✻ NOTICE

This system can only sense objects within the range and location of the sensors. It cannot detect objects in other areas where sensors are not installed. Also, small or slim objects, such as poles or objects located between sensors may not be detected by the sensors. Pay close attention when the vehicle is driven close to objects on the road, particularly pedestrians, and especially children. Always visually check behind the vehicle when backing up.
Be sure to inform any drivers of the vehicle that may be unfamiliar with the system regarding the system's capabilities and limitations.

Self-diagnosis

If you don't hear an audible warning sound or if the buzzer sounds intermittently when shifting the gear to the R (Reverse) position, this may indicate a malfunction in the reverse parking distance warning system. If this occurs, have your vehicle checked by an authorized Kia dealer as soon as possible.

✻ NOTICE

Your new vehicle warranty does not cover any accidents or damage to the vehicle or injuries to its occupants. Always drive safely and cautiously.

REAR VIEW MONITOR

The rear view monitor will activate with the ignition switch ON and the shift lever in the R (Reverse) position.

The system is a supplemental system that shows the area behind the vehicle through the audio screen while backing up.

- It is the responsibility of the driver to always check the inside/outside rearview mirrors and the area behind the vehicle before and while backing up.
- Always keep the camera lens clean. If the lens is covered with foreign matter, the camera may not operate normally.

⚠ WARNING - Backing & using camera

Never rely solely on the rear view camera. You must always use other methods of viewing the area behind you, including looking over both shoulders as well as continuously checking all three rear view mirrors. Due to the difficulty of ensuring that the area behind you remains clear, always back-up slowly and stop immediately if you suspect that a person, and especially a child, might be behind you.

LIGHTING

Battery saver function

- The purpose of this feature is to prevent the battery from being discharged if the lights are left in the ON position. The system automatically shuts off the parking lights 30 seconds after the ignition key is removed and the driver's door is opened and closed.
- With this feature, the parking lights will turn off automatically if the driver parks on the side of the road at night and opens the driver's side door.

  If necessary, to keep the parking lights on when the ignition key is removed, perform the following:

  1) Open the driver-side door.
  2) Turn the parking lights OFF and ON again using the light switch on the steering column.

Daytime running light (if equipped)

The Daytime Running Lights (DRL) can make it easier for others to see the front of your vehicle during the day. DRL can be helpful in many different driving conditions, and it is especially helpful after dawn and before sunset.

The DRL system turns OFF when:

1. The headlight switch is ON.
2. The engine is OFF.
3. The front fog light is ON.
4. The parking brake is engaged.

Lighting control

OUM044053

The light switch has a Headlight and a Parking light position.

To operate the lights, turn the knob at the end of the control lever to one of the following positions:

(1) OFF position

(2) Auto light position

(3) Parking & Tail light

(4) Headlight position

Parking & Tail light ( )

OJFA048374N

When the light switch is in the parking light position, the tail and license lights will turn ON.

Headlight position ( )

OJFA048375N

When the light switch is in the headlight position, the head, tail, license lights will turn ON.

✻ NOTICE

The ignition switch must be in the ON position to turn on the headlights.

Auto light position

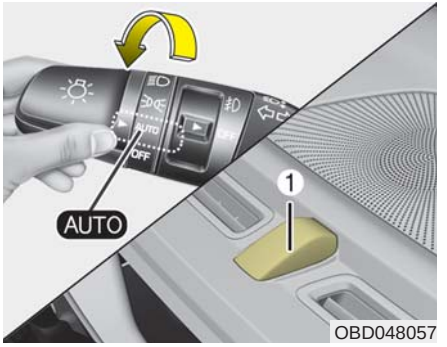

OBD048057

When the light switch is in the AUTO light position, the taillights and headlights will turn ON or OFF automatically depending on the amount of light outside the vehicle.

⚠ **CAUTION**

- ***Never place anything over the sensor (1) located on the instrument panel, as keeping the sensor unobstructed will ensure better auto-light system control.***
- ***Do not clean the sensor using a window cleaner as the cleaner may leave a light film which could interfere with the sensor's operation.***
- ***If your vehicle has window tint or other types of metallic coating on the front windshield, the Auto light system may not work properly.***

High beam operation

OJF045054

To turn on the high beam headlamp, push the lever away from you. The lever will return to its original position.

To turn off the high beam headlamps, pull the lever towards you. It will return to the normal (low beam) position when released.

The high beam indicator light will illuminate when the headlight high beams are switched on. To prevent the battery from being discharged, do not leave the lights on for a prolonged time while the engine is not running.

⚠ **WARNING - High beams**

Do not use high beam when there are other vehicles in front of your vehicle. Using high beam could obstruct the other driver's vision.

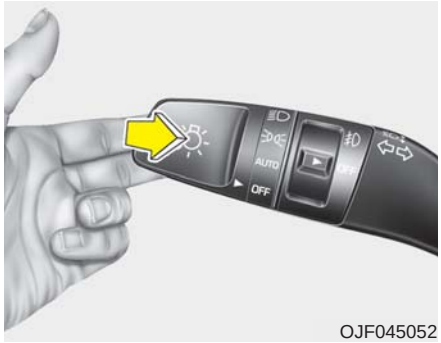

OJF045052

To flash the headlights, pull the lever towards you. It will return to the normal (low beam) position when released. The headlight switch does not need to be on to use this flashing feature.

High Beam Assist (if equipped)

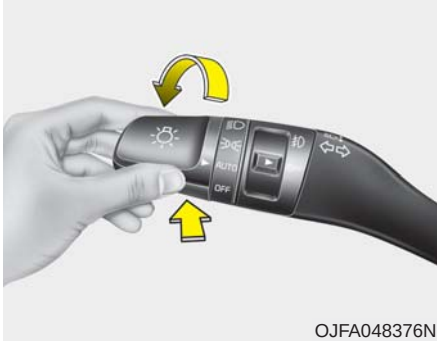

OJFA048376N

The High Beam Assist is a system that automatically adjusts the headlamp range (switches between high beam and low beam) according to the brightness of other vehicles and road conditions.

Operating condition

1. Place the light switch in the AUTO position.
2. Turn on the high beam by pushing the lever away from you.
3. The High Beam Assist ( ) indicator will illuminate.
4. The High Beam Assist will turn on when vehicle speed is above 40 km/h (25 mph).
5. The details of operation with the light switch while the High Beam Assist is on are below.
   (1) If the light switch is pushed away, the High Beam Assist will turn off and the high beam will be on.
   (2) If the light switch is pulled towards you when the high beam is off, the high beam will be on without cancellation of the High Beam Assist. (When you hands off, the lever will move to the middle and the high beam will turn off.)

(3) If the light switch is pulled towards you when the high beam is on by the High Beam Assist, the low beam will be on and the High Beam Assist will turn off.

(4) If the light switch is turned to the headlamp position (≡D) from AUTO position, the High Beam Assist will turn off and the low beam will be on.

When the High Beam Assist is operating, the high beam switches to low beam in the following conditions.

- When a headlamp is detected from an on-coming vehicle.
- When a tail lamp is detected from a front vehicle.
- When a headlamp/tail lamp from a bicycle/motorcycle is detected.
- When the surrounds are so bright that high beams are not needed.
- When streetlights or other lights are detected.
- When the light switch is not in the AUTO position.
- When the High Beam Assist is off.
- When vehicle speed is below 24 km/h (15 mph).

Warning light and message

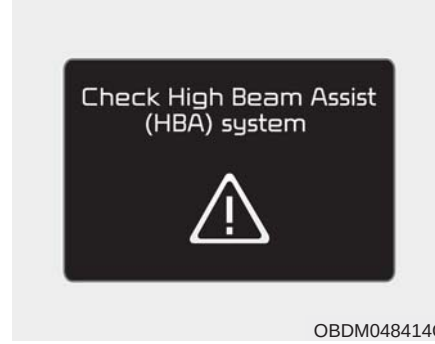

OBDM048414C

When the High Beam Assist System is not working properly, the warning message will come on for a few seconds. After the message disappears, the master warning light (⚠) will illuminate. In this situation, take your vehicle to an authorized Kia dealer and have the system checked.

⚠ **CAUTION**

The High Beam Assist system may not work properly in the following situations:

- ***When the light from another vehicle is poor***
  - ***When the light from another vehicle is not detected because of lamp damage, hidden from sight, etc.***
  - ***When the headlamp/tail lamp from another vehicle***
  - ***When another vehicle's headlamps are off but the fog lamps are on, etc.***
- ***When external condition is intervened***
  - ***When there is a similar shape as a vehicle's lamps.***
  - ***When the headlamp is not repaired or replaced at an authorized dealer.***
  - ***When headlamp aiming is not properly adjusted.***

(Continued)

(Continued)

- ***When driving on a narrow curved road, rough road, downhill or uphill.***
- ***When only part of the vehicle in front is visible on a cross-road or curved road.***
- ***When there is a traffic light, reflecting sign, flashing sign or mirror ahead.***
- ***When there is a temporary reflector or flash ahead (construction area).***
- ***When the road conditions are poor, such as when wet, icy, or covered with snow.***
- ***When a vehicle suddenly appears from a curve.***
- ***When the vehicle is tilted from a flat tire or being towed.***

(Continued)

(Continued)

- ***When front visibility is poor***
  - ***When the lamp of the on-coming or front vehicle is covered with dust, snow or water.***
  - ***When the light from the on-coming or front vehicle is not detected because of exhaust fume, smoke, fog, snow, etc.***
  - ***When the front window is covered with foreign matters.***
  - ***When it is hard to see because of fog, heavy rain or snow and etc.***

✻ NOTICE

- **Do not disassemble the front view camera for window tinting or installing any forms of coatings or accessories. If you disassemble and reassemble the camera, take your vehicle to an authorized Kia dealer and have the system checked to see if a calibration is needed.**
- **When you replace or reinstall the windshield glass or front view camera, take your vehicle to an authorized Kia dealer and have the system checked.**
- **Be careful that water doesn't get into the High Beam Assist unit and do not remove or damage parts of the High Beam Assist system.**
- **Do not place objects on the dash board that reflect light such as mirrors, white paper, etc. The system may not be able to function if sunlight is reflected.**

(Continued)

(Continued)

- **At times, the High Beam Assist may not operate due to system limitations. The system is for your convenience only.**
  It is the responsibility of the driver to drive safely and always check the road conditions.
- **When the system does not operate normally, change the lamp position manually between the high beam and low beam.**
- **Do not place any accessories, stickers or tint on the windshield.**

Turn signals and lane change signals

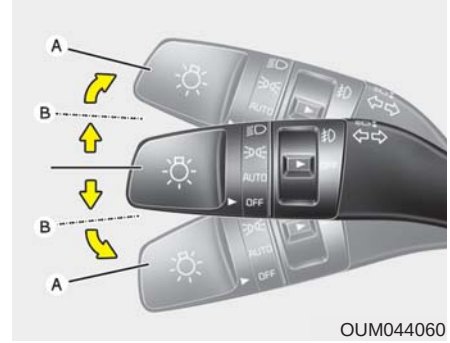

OUM044060

The ignition switch must be on for the turn signals to function. To turn on the turn signals, move the lever up or down (A). The green arrow indicators on the instrument panel indicate which turn signal is operating.

They will self-cancel after a turn is completed. If the indicator continues to flash after a turn, manually return the lever to the OFF position.

To signal a lane change, move the turn signal lever slightly and hold it in position (B). The lever will return to the OFF position when released.

If an indicator stays on and does not flash or if it flashes abnormally, one of the turn signal bulbs may be burned out and will require replacement.

✻ NOTICE

If an indicator flash is abnormally quick or slow, a bulb may be burned out or have a poor electrical connection in the circuit.

Front fog light (if equipped)

OJF045058

Fog lights are used to provide improved visibility when visibility is poor due to fog, rain or snow, etc. The fog lights will turn on when the fog light switch (1) is turned to the on position after the headlights are turned on.

To turn off the fog lights, turn the switch (1) to the off position.

When in operation, the fog lights consume large amounts of vehicle electrical power. Only use the fog lights when visibility is poor.

WIPERS AND WASHERS

Windshield wiper/washer

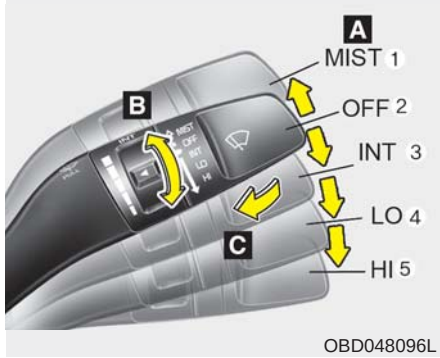

A : Wiper speed control (front)

- MIST – Single wipe
- OFF – Off
- INT – Intermittent wipe
- LO – Low wiper speed
- HI – High wiper speed

B : Intermittent control wipe time adjustment

C : Wash with brief wipes (front)*

Windshield wipers

Operates as follows when the ignition switch is turned ON.

MIST : For a single wiping cycle, move the lever to this (MIST) position and release it. The wipers will operate continuously if the lever is held in this position.

OFF : Wiper is not in operation

INT : Wiper operates intermittently at the same wiping intervals. Use this mode in light rain or mist. To vary the speed setting, turn the speed control knob.

LO : Normal wiper speed

HI : Fast wiper speed

✻ NOTICE

If there is heavy accumulation of snow or ice on the windshield, defrost the windshield for about 10 minutes, or until the snow and/or ice is removed, before using the windshield wipers in order to ensure proper operation. If you do not remove the snow and/or ice before using the wiper and washer, the wiper and washer system may be damaged.

Front windshield washers

OJF045063

In the OFF position, pull the lever gently toward you to spray washer fluid on the windshield and to run the wipers 1-3 cycles.

Use this function when the windshield is dirty.

The spray and wiper operation will continue until you release the lever.

If the washer does not work, check the washer fluid level. If the fluid level is not sufficient, you will need to add appropriate non-abrasive windshield washer fluid to the washer reservoir.

The reservoir filler neck is located in the front of the engine compartment on the passenger side.

⚠ CAUTION - Washer pump

To prevent possible damage to the washer pump, do not operate the washer when the fluid reservoir is empty.

⚠ WARNING - Obscured visibility

Do not use the washer in freezing temperatures without first warming the windshield with the defrosters; the washer solution could freeze on the windshield and obscure your vision.

⚠ CAUTION - Wipers & windshields

- ***To prevent possible damage to the wipers or windshield, do not operate the wipers when the windshield is dry.***
- ***To prevent damage to the wiper blades, do not use gasoline, kerosene, paint thinner, or other solvents on or near them.***
- ***To prevent damage to the wiper arms and other components, do not attempt to move the wipers manually.***

INTERIOR LIGHTS

Do not use the interior lights for extended periods when the engine is not running as this may cause battery discharge.

⚠ WARNING - Interior Lights

Do not use the interior lights when driving in the dark. Accidents could happen because the view may be obscured by interior lights.

Room lamp

- : The light stays on at all times.

Map lamp

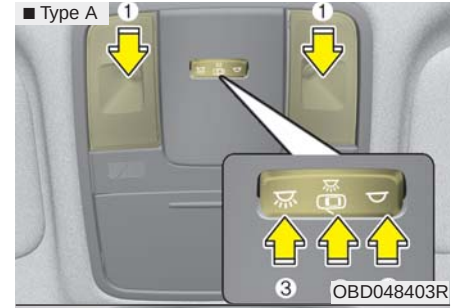

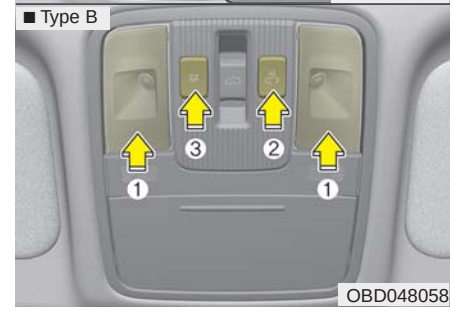

- Press the lens (1) to turn ON the map lamp.

  To turn the map lamp OFF, press the lens (1) again.

- (2) : DOOR mode
- The map lamp and room lamp come on when a door is opened. The lamps go out after approximately 30 seconds.
- The map lamp and room lamp come on for approximately 30 seconds when doors are unlocked with a transmitter or smart key as long as the doors are not opened.
- The map lamp and room lamp will stay on for approximately 20 minutes if a door is opened with the ignition switch in the ACC or LOCK/OFF position.
- The map lamp and room lamp will stay on continuously if the door is opened with the ignition switch in the ON position.
- The map lamp and room lamp will go out immediately if the ignition switch is changed to the ON position or all doors are locked.
- To turn off the DOOR mode, press the DOOR button (2) once again (not pressed).

✻ NOTICE

The DOOR mode and ROOM mode can not be selected at the same time.

Front Room Lamp:

• Type A

(3): Press this switch to turn the front and rear room lamps on.

(4): Press this switch to turn the front and rear room lamps off.

• Type B

(3): Press this switch to turn the front and rear room lamps on and off.

Trunk room lamp (if equipped)

The trunk room lamp comes on when the trunk is opened.

✻ NOTICE

The trunk room lamp comes on as long as the trunk lid opens. To prevent unnecessary battery drain, close the trunk lid securely after using the trunk.

Vanity mirror lamp (if equipped)

Push the switch to turn the light on or off.

- : The lamp will turn on if this button is pressed.
- ◯ : The lamp will turn off if this button is pressed.

⚠ **CAUTION - Vanity mirror lamp**

Always have the switch in the off position when the vanity mirror lamp is not in use. If the sunvisor is closed without the lamp off, it may discharge the battery or damage the sunvisor.

Glove box lamp (if equipped)

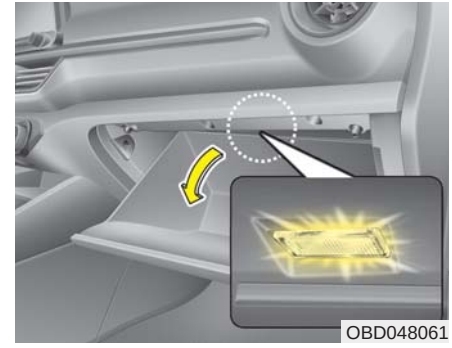

The glove box lamp comes on when the glove box is opened.

To prevent unnecessary battery drain, close the glove box securely after using the glove box.

WELCOME SYSTEM (IF EQUIPPED)

Headlight (Headlamp) escort function

The headlights (and/or taillights) remain on for approximately 5 minutes after the ignition key is removed or turned to the ACC or LOCK position. However, if the driver's door is opened and closed, the headlights are turned off after 15 seconds.

The headlights can be turned off by pressing the lock button on the transmitter or smart key twice or turning off the light switch from the headlight or Auto light position.

Interior light

When the interior light switch is in the DOOR position and all doors (and trunk) are locked and closed, the room lamp will come on for 30 seconds if any of the following occurs:

- Without smart key system
  - When the door unlock button is pressed on the transmitter.
- With the smart key system
  - When the door unlock button is pressed on the smart key.
  - When the button on the outside door handle is pressed.

At this time, if you press the door lock button, the lamps will turn off immediately.

Pocket light (if equipped)

OBD048013

When all the doors (and tailgate) are locked and closed, the door handle lamp will come on for about 15 seconds if any of the below is performed.

- With the smart key system
  - When the vehicle is approached with the smart key in possession.

DEFROSTER

⚠ **CAUTION - Conductors**

To prevent damage to the conductors bonded to the inside surface of the rear window, never use sharp instruments or window cleaners containing abrasives to clean the window.

If you want to defrost and defog the front windshield, refer to “Windshield defrosting and defogging” in this section.

Rear window defroster

The defroster heats the window to remove frost, fog and thin ice from the rear window, while the engine is running.

To activate the rear window defroster, press the rear window defroster button located in the center facia switch panel. The indicator on the rear window defroster button illuminates when the defroster is ON.

If there is heavy accumulation of snow on the rear window, brush it off before operating the rear defroster.

The rear window defroster automatically turns off after approximately 20 minutes or when the ignition switch is turned off. To turn off the defroster, press the rear window defroster button again.

Outside rearview mirror defroster

If your vehicle is equipped with the outside rearview mirror defrosters, they will operate at the same time you turn on the rear window defroster.

MANUAL CLIMATE CONTROL SYSTEM (IF EQUIPPED)

■ **Type A**

■ **Type B**

1. Fan speed control knob
2. Temperature control knob
3. Air conditioning button (if equipped)
4. Rear window defroster button
5. Air intake control button
6. Mode selection knob

✻ NOTICE

Operating the blower when the ignition switch is in the ON position could cause the battery to discharge. Operate the blower when the engine is running.

OBDM048300N/OBDM048301N

Heating and air conditioning

1. Start the engine.
2. Set the mode to the desired position.

   For improving the effectiveness of heating and cooling;

   - Heating:
   - Cooling:
3. Set the temperature control to the desired position.
4. Set the air intake control to the outside (fresh) air position (if equipped).
5. Set the fan speed control to the desired speed.
6. If air conditioning is desired, turn the air conditioning system (if equipped) on.

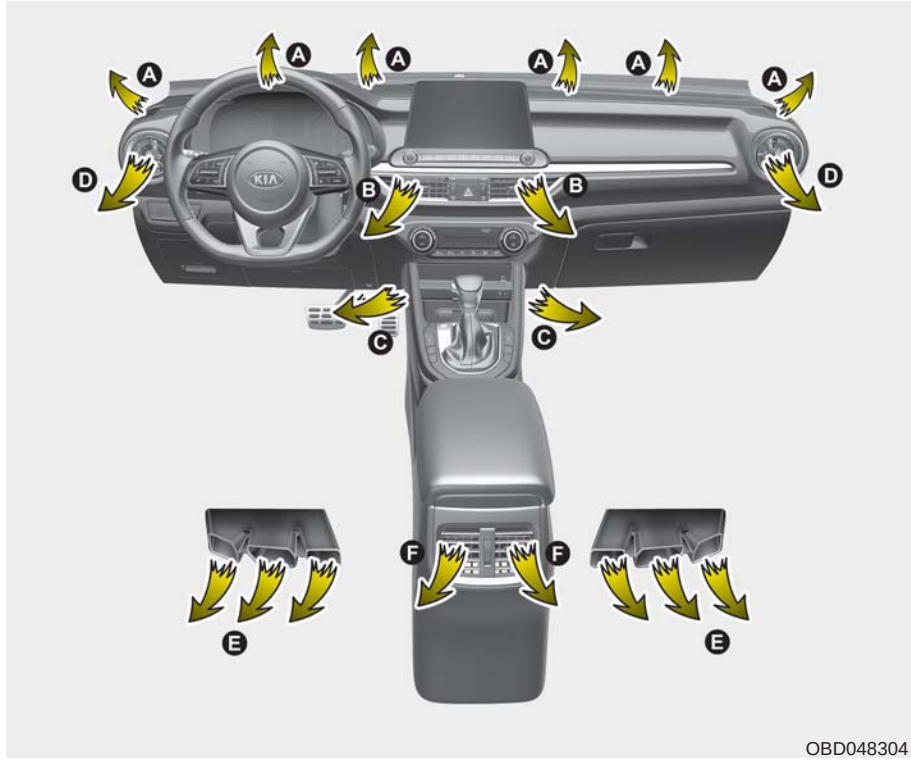

OBD048304

Mode selection

The mode selection knob controls the direction of the air flow through the ventilation system.

Air can be directed to the floor, dashboard outlets, or windshield. Five symbols are used to represent Face, Bi-Level, Floor, Floor-Defrost and Defrost air position.

Face-Level (B, D, F)

Air flow is directed toward the upper body and face. Additionally, each outlet can be controlled to direct the air discharged from the outlet.

Bi-Level (B, D, C, E, F)

Air flow is directed towards the face and the floor.

Floor-Level (C, E, A, D, F)

Most of the air flow is directed to the floor, with a small amount of the air being directed to the windshield and side window defrosters.

Floor/Defrost-Level (A, C, D, E, F)

Most of the air flow is directed to the floor and the windshield with a small amount directed to the side window defrosters.

Defrost-Level (A, D)

Most of the air flow is directed to the windshield with a small amount of air directed to the side window defrosters.

MAX A/C selection

OJF045077

The MAX A/C mode is used to cool the inside of the vehicle faster.

Air flow is directed toward the upper body and face.

In this mode, the air conditioning and the recirculated air position will be selected automatically.

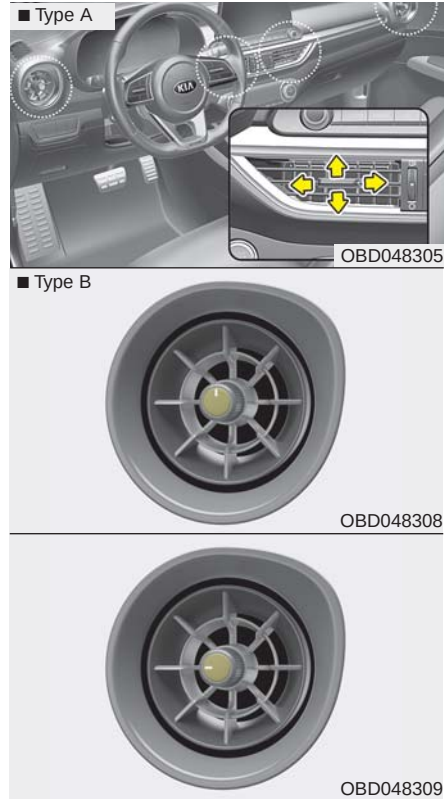

Instrument panel vents

- Type A

The outlet vents can be opened or closed separately using the thumb-wheel. To close the vent, rotate it downward to the maximum position.

Also, you can adjust the direction of air delivery from these vents using the vent control lever as shown.

- Type B

The outlet vents can be opened or closed separately turning the knob right or left. Also, you can adjust the direction of air delivery from these vents by moving the knob in any direction.

Temperature control

OBD048306

The temperature control knob allows you to control the temperature of the air flowing from the ventilation system. To change the air temperature in the passenger compartment, turn the knob to the right for warm and hot air, or to the left for cooler air.

Air intake control

OBDM048307N

The air intake control is used to select the outside (fresh) air position or recirculated air position.

To change the air intake control position, press the control button.

Recirculated air position

With the recirculated air position selected, air from the passenger compartment will be drawn through the heating system and heated or cooled according to the function selected.

Outside (fresh) air position

If the recirculated air position is not selected or turned off, air enters the vehicle from outside and is heated or cooled according to the function selected.

Prolonged operation of the heater in the recirculated air position (without air conditioning selected) may cause fogging of the windshield and side windows and the air within the passenger compartment may become stale. In addition, prolonged use of the air conditioning with the recirculated air position selected will result in excessively dry air in the passenger compartment.

⚠ WARNING - Reduced visibility

Continued use of the climate control system in the recirculated air position may allow humidity to increase inside the vehicle, which may fog the glass and obscure visibility.

⚠ WARNING - Sleeping with A/C on

Do not sleep in a vehicle with the air conditioning or heating system on as this may cause serious harm or death due to a drop in the oxygen level and/or body temperature.

⚠ WARNING - Recirculated air

Continued use of the climate control system in the recirculated air position can cause drowsiness or sleepiness, and loss of vehicle control. Set the air intake control to the outside (fresh) air position as much as possible while driving.

Fan speed control

OBDM048412N

The ignition switch must be in the ON position for fan operation.

The fan speed control knob allows you to control the fan speed of the air flowing from the ventilation system. To change the fan speed, turn the knob to the right for higher speed or left for lower speed.

Setting the fan speed control knob to the “0” position turns off the fan.

Air conditioning

OBD048311

Press the A/C button to turn the air conditioning system on (indicator light will illuminate). Press the button again to turn the air conditioning system off.

System operation

Ventilation

1. Set the mode to the position.
2. Set the air intake control to the outside (fresh) air position.
3. Set the temperature control to the desired position.
4. Set the fan speed control to the desired speed.

Heating

1. Set the mode to the position.
2. Set the air intake control to the outside (fresh) air position.
3. Set the temperature control to the desired position.
4. Set the fan speed control to the desired speed.
5. If dehumidified heating is desired, turn the air conditioning system (if equipped) on.

- If the windshield fogs up, set the mode to the or position.

Operation Tips

- To keep dust or unpleasant fumes from entering the vehicle through the ventilation system, temporarily set the air intake control to the recirculated air position. Be sure to return the control to the fresh air position when the irritation has passed to keep fresh air in the vehicle. This will help keep the driver alert and comfortable.
- Air for the heating/cooling system is drawn in through the grilles just ahead of the windshield. Care should be taken that these are not blocked by leaves, snow, ice or other obstructions.
- To prevent interior fog on the windshield, set the air intake control to the fresh air position and fan speed to the desired position, turn on the air conditioning system, and adjust the temperature control to the desired temperature.

Air conditioning

Kia Air Conditioning Systems are filled with R-1234yf refrigerant.

1. Start the engine. Push the air conditioning button.
2. Set the mode to the position.
3. Set the air intake control to the outside air or recirculated air position.
4. Adjust the fan speed control and temperature control to maintain maximum comfort.

- The refrigerant system should only be serviced by trained and certified technicians to ensure proper and safe operation.
- The refrigerant system should be serviced in a well-ventilated place.
- The air conditioning evaporator (cooling coil) should never be repaired or replaced with one removed from a used or salvaged vehicle, and new replacement MAC evaporators should be certified (and labeled) as meeting SAE Standard J2842.

⚠ CAUTION - Excessive A/C

When using the air conditioning system, monitor the temperature gauge closely while driving up hills or in heavy traffic when outside temperatures are high. Air conditioning system operation may cause engine overheating. Continue to use the blower fan but turn the air conditioning system off if the temperature gauge indicates engine overheating.

⚠ CAUTION

When opening the windows in humid weather, air conditioning may create water droplets inside the vehicle. Since excessive water droplets may cause damage to electrical equipment, air conditioning should only be used with the windows closed.

Air conditioning system operation tips

- If the vehicle has been parked in direct sunlight during hot weather, open the windows for a short time to let the hot air inside the vehicle escape.
- To help reduce moisture inside of the windows on rainy or humid days, decrease the humidity inside the vehicle by operating the air conditioning system.
- During air conditioning system operation, you may occasionally notice a slight change in engine speed as the air conditioning compressor cycles. This is a normal operating characteristic of the system.
- Use the air conditioning system every month for a few minutes to ensure maximum system performance.

- When using the air conditioning system, you may notice clear water dripping (or even puddling) on the ground under the passenger side of the vehicle. This is a normal operating characteristic of the system.
- Operating the air conditioning system in the recirculated air position provides maximum cooling, however, continual operation in this mode may cause the air inside the vehicle to become stale.
- During cooling operation, you may occasionally notice a misty air flow because of rapid cooling and humid air intake. This is a normal operating characteristic of the system.

Climate control air filter (if equipped)

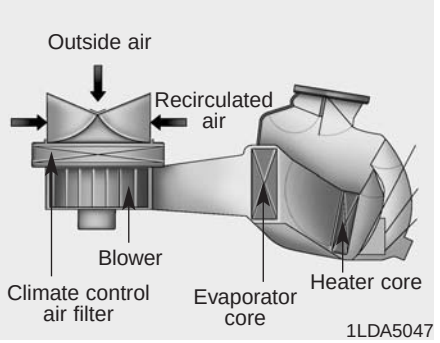

The climate control air filter installed behind the glove box filters the dust or other pollutants that come into the vehicle from the outside through the heating and air conditioning system. If dust or other pollutants accumulate in the filter over a period of time, the air flow from the air vents may decrease, resulting in moisture accumulation on the inside of the windshield even when the outside (fresh) air position is selected. If this happens, we recommend that the climate control air filter be replaced by an authorized Kia dealer.

✻ NOTICE

- **Replace the filter according to the Maintenance Schedule.**
  If the vehicle is being driven in severe conditions such as dusty or rough roads, more frequent climate control air filter inspections and changes are required.
- **When the air flow rate suddenly decreases, we recommend that the system be inspected by an authorized Kia dealer.**

Checking the amount of air conditioner refrigerant and compressor lubricant

When the amount of refrigerant is low, the performance of the air conditioning is reduced. Overfilling also has a negative influence on the air conditioning system.

Therefore, if abnormal operation is found, have the system inspected by an authorized Kia dealer.

⚠ WARNING - Vehicles equipped with R-1234yf

Because the refrigerant is mildly flammable and at very high pressure, the air conditioning system should only be serviced by trained and certified technicians. It is important that the correct type and amount of oil and refrigerant is used.

Otherwise, it may cause damage to the vehicle and personal injury.

⚠ WARNING

The oil and refrigerant in your vehicle's air conditioning system is under very high pressure. If proper service procedures are not followed, an explosion may result. To reduce the risk of serious injury or death, the air conditioning system in your vehicle should only be serviced by trained and certified technicians.

⚠ CAUTION - A/C Repair

It is important that the correct type and amount of oil and refrigerant is used, otherwise damage to the vehicle may occur. To prevent damage, the air conditioning system in your vehicle should only be serviced by trained and certified technicians.

AUTOMATIC CLIMATE CONTROL SYSTEM (IF EQUIPPED)

1. Driver`s temperature control knob
2. AUTO (automatic control) button
3. Front windshield defroster button
4. Rear window defroster button
5. Air conditioning button
6. Air intake control button
7. Blower OFF button
8. Fan speed control button
9. Mode selection button
10. Passenger`s temperature control knob
11. SYNC button
12. A/C display

✻ NOTICE

Operating the blower when the ignition switch is in the ON position could cause the battery to discharge. Operate the blower when the engine is running.

OBD048312

Automatic heating and air conditioning

OBD048313

1. Press the AUTO button. The modes, fan speeds, air intake and air-conditioning will be controlled automatically by setting the temperature.

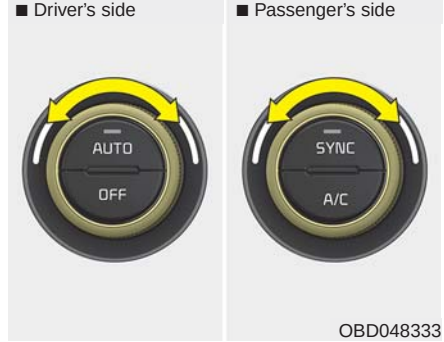

OBD048333

2. Turn the temperature control knob to the desired temperature.

✻ NOTICE

- **To turn the automatic operation off, select any button or switch of the following:**
  - **Mode selection button**
  - **Air conditioning button**
  - **Front windshield defroster button (Press the button one more time to deselect the front windshield defroster function. The 'AUTO' sign will illuminate on the information display once again.)**
  - **Air intake control button**
  - **Fan speed control switch**

  The selected function will be controlled manually while other functions operate automatically.
- **For your convenience and to improve the effectiveness of the climate control, use the AUTO button and set the temperature to 22°C (72°F).**

✻ NOTICE

Never place anything over the sensor located on the instrument panel to ensure better control of the heating and cooling system.

Manual heating and air conditioning

The heating and cooling system can be controlled manually by pressing buttons or turning knob(s) other than the AUTO button. In this case, the system works sequentially according to the order of buttons or knob(s) selected.

1. Start the engine.
2. Set the mode to the desired position.

   For improving the effectiveness of heating and cooling;

   - Heating:
   - Cooling:
3. Set the temperature control to the desired position.
4. Set the air intake control to the outside (fresh) air position.
5. Set the fan speed control to the desired speed.
6. If air conditioning is desired, turn the air conditioning system on.

Press the AUTO button in order to convert to full automatic control of the system.

Mode selection

The mode selection button controls the direction of the air flow through the ventilation system.

The air flow outlet port is converted as follows:

Refer to the illustration in the “Manual climate control system”.

Face-Level

Air flow is directed toward the upper body and face. Additionally, each outlet can be controlled to direct the air discharged from the outlet.

Bi-Level

Air flow is directed towards the face and the floor.

Floor-Level

Most of the air flow is directed to the floor, with a small amount of the air being directed to the windshield and side window defrosters.

Floor/Defrost-Level

Most of the air flow is directed to the floor and the windshield with a small amount directed to the side window defrosters.

Defrost mode

When you select the defrost mode, the following system settings will be made automatically:

- The air conditioning system will be turned on.
- The outside(fresh) air position will be selected.
- The fan speed will be set to high speed.

To turn the defrost mode off, press the mode button or defrost button again or AUTO button.

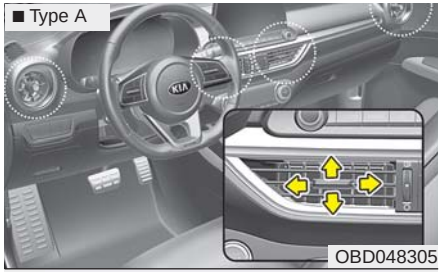

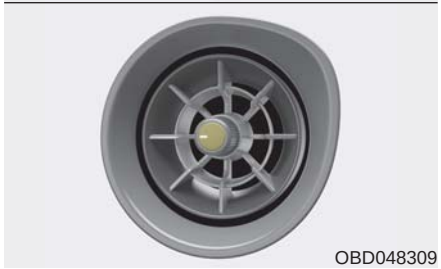

Instrument panel vents

- Type A

The outlet port can be opened or closed separately using the horizontal thumbwheel. To close the vent, rotate it downward to the maximum position. To open the vent, rotate it upward to the desired position.

Also, you can adjust the direction of air delivered from these vents using the vent control lever as shown.

- Type B

The outlet vents can be opened or closed separately turning the knob right or left. Also, you can adjust the direction of air delivery from these vents by moving the knob in any direction.

Temperature control

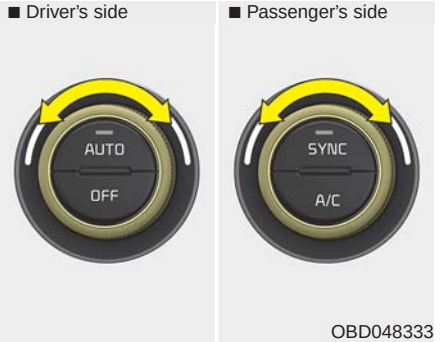

The temperature will increase to the maximum (HI) by turning the knob all the way to the right.

The temperature will decrease to the minimum (Lo) by turning the knob all the way to the left.

When turning the knob, the temperature will increase or decrease by 0.5°C/1°F. When set to the lowest temperature increments setting, the air conditioning will operate continuously.

OBD048317

Adjusting the driver and passenger side temperature equally

- Press the “SYNC” button to adjust the driver and passenger side temperature equally.

  The passenger side temperature will be set to the same temperature as the driver side temperature.
- Turn the driver side temperature control knob. The driver and passenger side temperature will be adjusted equally.

Adjusting the driver and passenger side temperature individually

- Press the “SYNC” button again to adjust the driver and passenger side temperature individually. The illumination of the button turns off.
- Operate the driver side temperature control knob to adjust the driver side temperature.
- Operate the passenger side temperature control knob to adjust the passenger side temperature.

Temperature conversion

You can switch the temperature mode from Centigrade to Fahrenheit as follows:

While pressing the OFF button, press the AUTO button for 3 seconds or more.

The display will change from Centigrade to Fahrenheit, or from Fahrenheit to Centigrade.

If the battery has been discharged or disconnected, the temperature mode display will reset to Fahrenheit.

Air intake control

OBD048318

This is used to select the outside (fresh) air position or recirculated air position.

To change the air intake control position, push the control button.

Recirculated air position

With the recirculated air position selected, air from the passenger compartment will be drawn through the heating system and heated or cooled according to the function selected.

Outside (fresh) air position

If the recirculated air position is not selected or turned off, air enters the vehicle from outside and is heated or cooled according to the function selected.

Prolonged operation of the heater in the recirculated air position (without air conditioning selected) may cause fogging of the windshield and side windows, and the air within the passenger compartment may become stale.

In addition, prolonged use of the air conditioning with the recirculated air position selected will result in excessively dry air in the passenger compartment.

Fan speed control

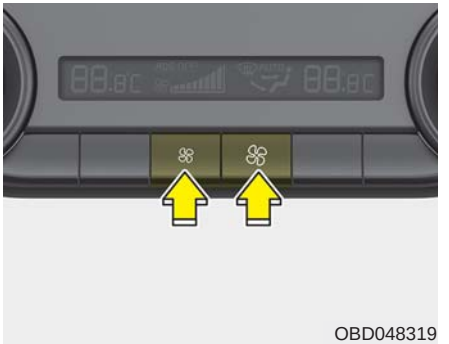

OBD048319

The fan speed can be set to the desired speed by operating the fan speed control button.

To change the fan speed, press the (♣) button for higher speed, or push (♣) the button for lower speed. To turn the fan speed control off, press the front blower OFF button.

Air conditioning

OBD048320

Press the A/C button to turn the air conditioning system on (indicator light will illuminate).

Press the button again to turn the air conditioning system off.

⚠ WARNING - Reduced Visibility

Continuous use of the climate control system in the recirculated air position may allow humidity to increase inside the vehicle which may fog the glass and obscure visibility.

⚠ WARNING - Recirculated Air

Continued use of the climate control system in the recirculated air position can cause drowsiness or sleepiness, and loss of vehicle control. Set the air intake control to the outside (fresh) air position as much as possible while driving.

⚠ WARNING - Sleeping with A/C on

Do not sleep in a vehicle with the air conditioning or heating on as this may cause serious harm or death due to a drop in the oxygen level and/or body temperature.

OFF mode

OBD048322

Press the front blower OFF button to turn off the front air climate control system. However, you can still operate the mode and air intake buttons as long as the ignition switch is in the ON position.

System operation

Ventilation

1. Set the mode to the position.
2. Set the air intake control to the outside (fresh) air position.
3. Set the temperature control to the desired position.
4. Set the fan speed control to the desired speed.

Heating

1. Set the mode to the position.
2. Set the air intake control to the outside (fresh) air position.
3. Set the temperature control to the desired position.
4. Set the fan speed control to the desired speed.
5. If dehumidified heating is desired, turn the air conditioning system (if equipped) on.

- If the windshield fogs up, set the mode to the or position.

Operation Tips

- To keep dust or unpleasant fumes from entering the vehicle through the ventilation system, temporarily set the air intake control to the recirculated air position. Be sure to return the control to the fresh air position when the irritation has passed to keep fresh air in the vehicle. This will help keep the driver alert and comfortable.
- Air for the heating/cooling system is drawn in through the grilles just ahead of the windshield. Care should be taken that these are not blocked by leaves, snow, ice or other obstructions.
- To prevent interior fog on the windshield, set the air intake control to the fresh air position and fan speed to the desired position, turn on the air conditioning system, and adjust the temperature control to the desired temperature.

Air conditioning (if equipped)

All Kia Air Conditioning Systems are filled with R-1234yf refrigerant.

1. Start the engine. Press the air conditioning button.
2. Set the mode to the position.
3. Set the air intake control to the outside air or recirculated air position.
4. Adjust the fan speed control and temperature control to maintain maximum comfort.

- When maximum cooling is desired, set the temperature control all the way to the left position, set the mode control to the MAX A/C position, then set the fan speed control to the highest speed.

⚠ **CAUTION - Excessive A/C Use**

When using the air conditioning system, monitor the temperature gauge closely while driving up hills or in heavy traffic when outside temperatures are high. Air conditioning system operation may cause engine overheating. Continue to use the blower fan but turn the air conditioning system off if the temperature gauge indicates engine overheating.

✻ NOTICE

When opening the windows in humid weather, air conditioning may create water droplets inside the vehicle. Since excessive water droplets may cause damage to electrical equipment, air conditioning should only be used with the windows closed.

Air conditioning system operation tips

- If the vehicle has been parked in direct sunlight during hot weather, open the windows for a short time to let the hot air inside the vehicle escape.
- To help reduce moisture inside of the windows on rainy or humid days, decrease the humidity inside the vehicle by operating the air conditioning system.
- During air conditioning system operation, you may occasionally notice a slight change in engine speed as the air conditioning compressor cycles. This is a normal operating characteristic of the system.
- Use the air conditioning system every month for a few minutes to ensure maximum system performance.
- When using the air conditioning system, you may notice clear water dripping (or even puddling) on the ground under the passenger side of the vehicle. This is a normal operating characteristic of the system.
- Operating the air conditioning system in the recirculated air position provides maximum cooling, however, continual operation in this mode may cause the air inside the vehicle to become stale.
- During cooling operation, you may occasionally notice a misty air flow because of rapid cooling and humid air intake. This is a normal operating characteristic of the system.

Climate control air filter (if equipped)

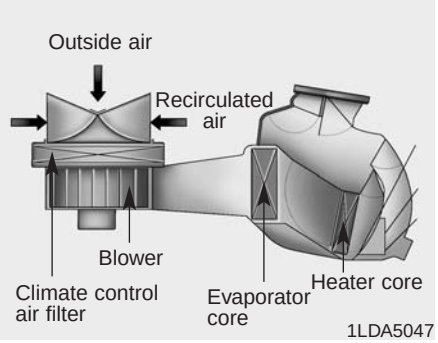

The climate control air filter installed behind the glove box filters the dust or other pollutants that come into the vehicle from the outside through the heating and air conditioning system. If dust or other pollutants accumulate in the filter over a period of time, the air flow from the air vents may decrease, resulting in moisture accumulation on the inside of the windshield even when the outside (fresh) air position is selected. If this happens, have the climate control air filter replaced by an authorized Kia dealer.

✻ NOTICE

- **Replace the filter according to the Maintenance Schedule.**
  If the vehicle is being driven in severe conditions such as dusty or rough roads, more frequent air conditioner filter inspections and changes are required.
- **When the air flow rate suddenly decreases, the system should be checked at an authorized Kia dealer.**

Checking the amount of air conditioner refrigerant and compressor lubricant

When the amount of refrigerant is low, the performance of the air conditioning is reduced. Overfilling also has a negative impact on the air conditioning system.

Therefore, if abnormal operation is found, have the system inspected by an authorized Kia dealer.

⚠ WARNING - Vehicles equipped with R-1234yf

Because the refrigerant is mildly flammable and at very high pressure, the air conditioning system should only be serviced by trained and certified technicians.

It is important that the correct type and amount of oil and refrigerant is used.

Otherwise, it may cause damage to the vehicle and personal injury.

⚠ WARNING

The oil and refrigerant in your vehicle's air conditioning system is under very high pressure. If proper service procedures are not followed, an explosion may result. To reduce the risk of serious injury or death, the air conditioning system in your vehicle should only be serviced by trained and certified technicians.

⚠ CAUTION

It is important that the correct type and amount of oil and refrigerant is used, otherwise damage to the vehicle may occur. To prevent damage, the air conditioning system in your vehicle should only be serviced by trained and certified technicians.

WINDSHIELD DEFROSTING AND DEFOGGING

⚠ WARNING - Windshield heating

Do not use the ⛐ or ⛐ position during cooling operation in extremely humid weather. The difference between the temperature of the outside air and the windshield could cause the outer surface of the windshield to fog up, causing loss of visibility. In this situation, set the mode selection to the ⛐ position and fan speed control to a lower speed.

- For maximum defrosting, set the temperature control all the way to the right/hot position and the fan speed control to the highest speed.
- If warm air to the floor is desired while defrosting or defogging, set the mode to the floor-defrost position.
- Before driving, clear all snow and ice from the windshield, rear window, outside rear view mirrors, and all side windows.
- Clear all snow and ice from the hood and air inlet in the cowl grill to improve heater and defroster efficiency and to reduce the probability of fogging up the inside of the windshield.

Manual climate control system

To defog inside windshield

1. Set the fan speed to the desired position.
2. Select desired temperature.
3. Select the ⛐ or ⛐ position.
4. The outside (fresh) air and air conditioning will be selected automatically.

If the air conditioning and/or outside (fresh) air position are not selected automatically, press the corresponding button manually.

To defrost outside windshield

1. Set the fan speed to the highest position.
2. Set the temperature to the highest (HI) position.
3. Select the position.
4. The outside (fresh) air and air conditioning will be selected automatically.

If the air conditioning is not selected automatically, press the corresponding button manually.

Automatic climate control system

To defog inside windshield

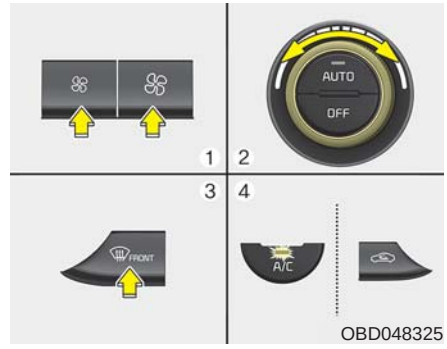

1. Set the fan speed to the desired position.
2. Select desired temperature.
3. Press the defroster button ( ).
4. The outside (fresh) air position will be selected automatically and the air conditioning will turn on according to the detected ambient temperature.

If the air conditioning and outside (fresh) air position are not selected automatically, adjust the corresponding button manually. If the position is selected, lower fan speed is adjusted to a higher fan speed.

To defrost outside windshield

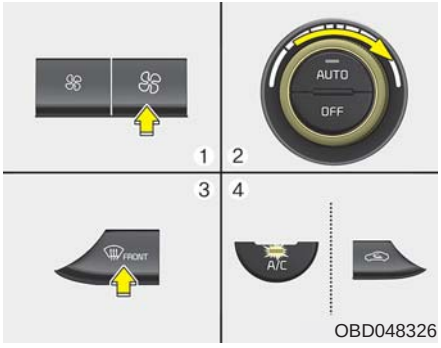

1. Set the fan speed to the highest position.
2. Set the temperature to the highest (HI) position.
3. Press the defroster button ( ).
4. The outside (fresh) air position will be selected automatically and the air conditioning will turn on according to the detected ambient temperature.

Defogging logic

To reduce the possibility of fogging up the inside of the windshield, the air intake or air conditioning is controlled automatically according to certain conditions such as or position. To cancel automatic defogging logic or to return to the automatic defogging logic, do the following.

Manual climate control system

1. Turn the ignition switch to the ON position.
2. Press the defroster button ( ).
3. Within 3 seconds after pressing the defroster button, press the air intake control button at least 5 times within 3 seconds.

If the battery has been discharged or disconnected, it resets to the defog logic status.

Automatic climate control system

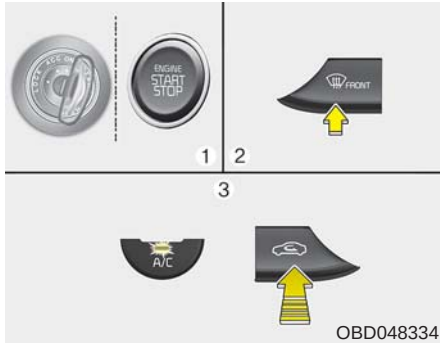

OBD048334

1. Turn the ignition switch to the ON position.
2. Press the defroster button ( ).
3. While pressing the air conditioning button (A/C), press the air intake control button at least 5 times within 3 seconds.

The recirculation indicator blinks 3 times with 0.5 second intervals. It indicates that the defogging logic is canceled or returned to the programmed status.

If the battery has been discharged or disconnected, it resets to the defog logic status.

Auto defogging system (if equipped)

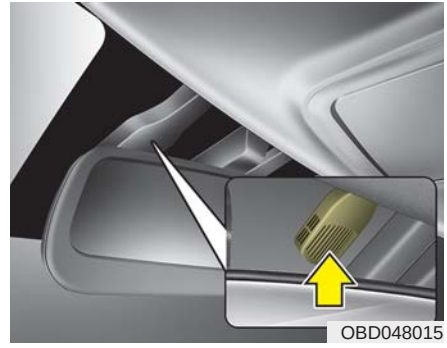
OBD048015

Auto defogging reduces the probability of fogging up the inside of the windshield by automatically sensing the moisture of inside the windshield.

The auto defogging system operates when the heater or air conditioning is on.

This indicator illuminates when the auto defogging system senses moisture on the inside of the windshield and is activated.

The auto defogging system addresses excess moisture on the inside of the windshield in stages. For example, if auto defogging does not defog inside the windshield at step 1 Outside air position, it tries to defog again at step 2 Operating the air conditioning.

Step 1 : Outside air position

Step 2 : Operating the air conditioning

Step 3 : Blowing air flow toward the windshield

Step 4 : Increasing air flow toward the windshield

To cancel or reset the Auto Defogging System

Press the front windshield defroster button for 3 seconds when the ignition switch is in the ON position. When the Auto Defogging System is canceled, the ADS OFF symbol will blink 3 times and ADS OFF will be displayed on the climate control information screen.

When the Auto Defogging System is reset, ADS OFF symbol will blink 6 times without a signal.

⚠ **CAUTION**

Do not remove the sensor cover located on the upper end of the passenger side windshield glass. Damage to the system parts could occur and may not be covered by your vehicle warranty.

STORAGE COMPARTMENTS

These compartments can be used to store small items required by the driver or passengers.

- To avoid possible theft, do not leave valuables in the storage compartment.
- Always keep the storage compartment covers closed while driving. Do not attempt to place so many items in the storage compartment that the storage compartment cover can not close securely.

⚠ WARNING - Flammable materials

Do not store, propane cylinders or other flammable/explosive materials in the vehicle. These items may catch fire and/or explode if the vehicle is exposed to hot temperatures for extended periods.

Center console storage

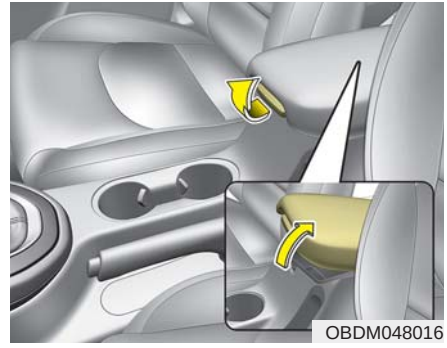

To open the center console storage, pull up the lever.

Glove box

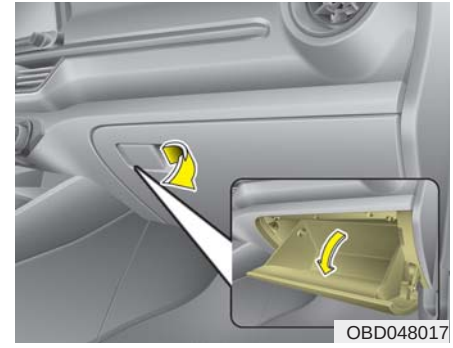

To open the glove box, pull the handle, and the glove box will automatically open. Close the glove box after use.

⚠ WARNING - Glove Box

To reduce the risk of injury in an accident or sudden stop, always keep the glove box door closed while driving.

✻ NOTICE

If the temperature control knob is in the warm or hot position, warm or hot air will flow into the glove box.

Sunglass holder

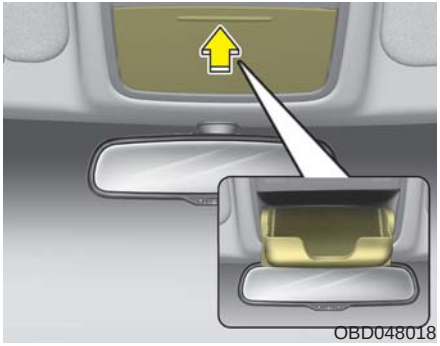

To open the sunglass holder, press the cover and the holder will slowly open. Place your sunglasses with the lenses facing out.

To close the sunglass holder, push it up.

⚠ WARNING - Sunglass holder

- **Do not keep objects except sunglasses inside the sunglass holder. Heavier objects can be thrown from the holder in the event of a sudden stop or an accident, possibly injuring the passengers.**
- **Do not open the sunglass holder while the vehicle is moving. The rear view mirror of the vehicle can be blocked by an opened sunglass holder.**
- **Do not put glasses forcibly into the sunglass holder to prevent breakage or deformation of the glasses. It may cause bodily injury if you try to open the sunglass holder forcibly when glasses are jammed in the holder.**

INTERIOR FEATURES

Cup holder

⚠ WARNING - Hot liquids

Do not place uncovered cups with hot liquid in the cup holder while the vehicle is in motion. If the hot liquid spills, you may burn yourself. Such a burn to the driver could lead to loss of control of the vehicle.

⚠ CAUTION

Keep your drinks sealed while driving to prevent spilling your drink. If liquid spills, it may get into the vehicle's electrical/electronic system and damage electrical/electronic parts.

✻ NOTICE

When cleaning spilled liquids, do not use heat to dry the cup holders. This may damage the cup holder.

■ Front seat

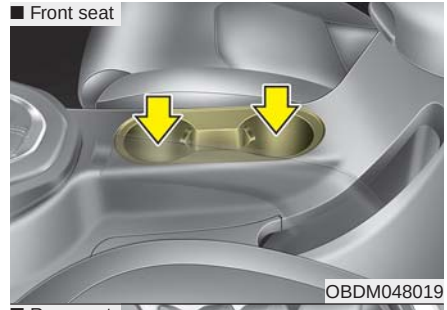

OBDM048019

■ Rear seat

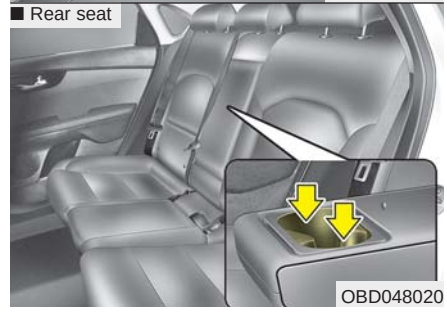

OBD048020

Cups or small beverage cans may be placed in the cup holders.

Seat warmer (if equipped)

■ Front seat

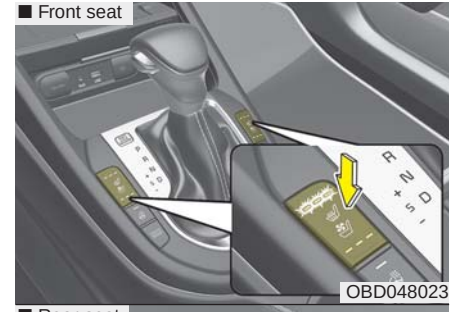

OBD048023

■ Rear seat

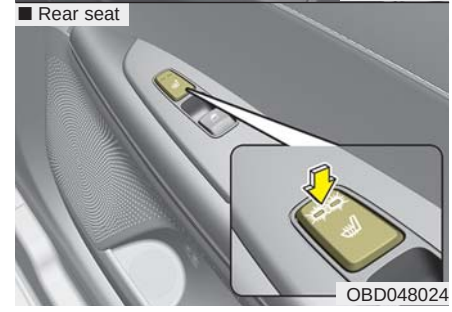

OBD048024

The seat warmer is provided to warm the front seats during cold weather. With the ignition switch in the ON position, push either of the switches to warm the driver's seat or the front passenger's seat.

During mild weather or under conditions where the operation of the seat warmer is not needed, keep the switches in the "OFF" position.

▶ Temperature control (Manual)

- Each time you press the switch, the temperature setting of the seat will change as follows :

■ Front seat

OFF→HIGH( )→MIDDLE( )→LOW( )

■ Rear seat

OFF→HIGH( )→LOW( )

- The seat warmer defaults to the OFF position whenever the ignition switch is turned on.

▶ Temperature control(Automatic)

The seat warmer starts to automatically control the seat temperature in order to prevent low-temperature burns after being manually turned ON.

OFF→HIGH( )→MIDDLE( )→LOW( )

30min 60min

You may manually press the button to increase the seat temperature. However, it soon returns to the automatic mode again.

- When pressing the switch for more than 1.5 seconds with the seat warmer operating, the seat warmer will turn OFF.
- The seat warmer defaults to the OFF position whenever the Engine Start/Stop button is in the ON position.

✻ NOTICE

With the seat warmer switch in the ON position, the heating system in the seat turns off or on automatically depending on the seat temperature.

⚠ WARNING - Seat warmer burns

The seat warmer may cause burns, even at low temperatures, if used over a long period of time. Never allow passengers who may not be able to take care of themselves to be exposed to the risk of seat heater burns. These include:

1. **Infants, children, elderly or disabled persons, or hospital outpatients**
2. **Persons with sensitive skin or those that burn easily**
3. **Fatigued individuals**
4. **Intoxicated individuals**
5. **Individuals taking medication that can cause drowsiness or sleepiness (sleeping pills, cold tablets, etc.)**

Air ventilation seat (if equipped)

The temperature setting of the seat changes according to the switch position.

- If you want to ventilate your seat cushion, press the switch (blue color).
- Each time you press the button, the airflow will change as follows:

OFF→HIGH( )→MIDDLE( )→LOW( )

- The seat warmer (with air ventilation) defaults to the OFF position whenever the ignition switch is turned on.

⚠ CAUTION - Seat damage

- ***When cleaning the seats, do not use an organic solvent such as paint thinner, benzene, alcohol and gasoline. Doing so may damage the air ventilation seat.***
- ***Do not place heavy or sharp objects on the seat. Those things may damage the air ventilation seat.***
- ***Be careful not to spill liquid such as water or beverages on the seat. If you spill some liquid, wipe the seat with a dry towel. Before using the air ventilation seat, dry the seat completely.***

Sunvisor

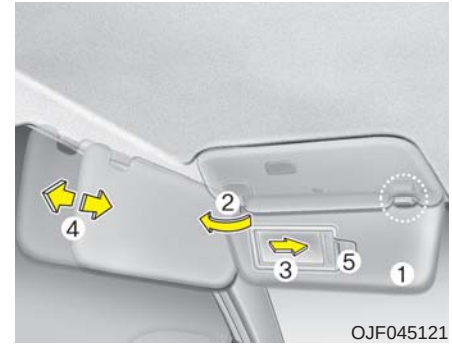

Use the sunvisor to shield direct light through the front or side windows.

To use the sunvisor, pull it downward.

To use the sunvisor for the side window, pull it downward, unsnap it from the bracket (1) and swing it to the side (2).

To use the vanity mirror, pull down the visor and slide the mirror cover (3).

Adjust the sunvisor extension forward or backward (4) (if equipped).

The ticket holder (5) is provided for holding a tollgate ticket.

* The actual sunvisor lamp in the vehicle may differ from the illustration.

⚠ CAUTION - Vanity mirror lamp

If you use the vanity mirror lamp, turn off the lamp before returning the sunvisor to its original position, otherwise it could result in battery discharge and possible sunvisor damage.

⚠ CAUTION - Ticket holder

- ***Do not put too many tickets between a ticket holder and a sunvisor. It could result in deformation or damage to the ticket holder.***
- ***Do not put a plastic card such as credit cards in the ticket holder. It could result in deformation of the plastic card.***

⚠ CAUTION

Do not put several tickets in the ticket holder at one time. This could cause damage to the ticket holder.

Sliding armrest (if equipped)

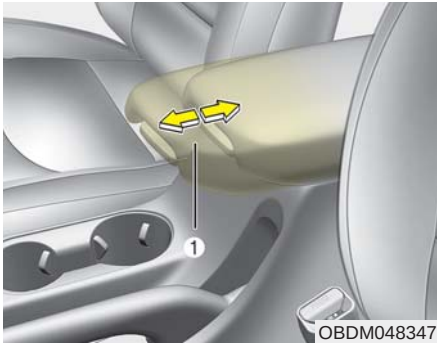

To move forward

Grab the front portion of the armrest, then press up the lever (1) and pull it forward

To move rearward

Push the armrest rearward with your palm.

⚠ WARNING

Do not grab the front portion of the armrest (1) when moving the armrest rearward. It may pinch your fingers.

Power outlet (if equipped)

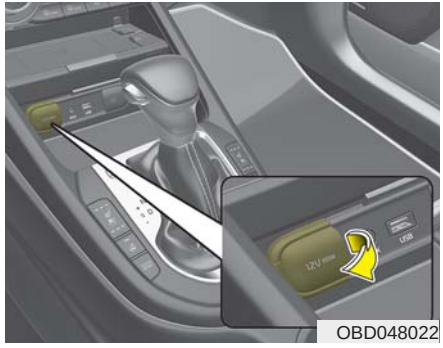

OBD048022

The power outlet is designed to provide power for mobile telephones or other devices designed to operate with vehicle electrical systems. The devices should draw less than 10 amps with the engine running.

- Use the power outlet only when the engine is running and remove the accessory plug after use. Using the accessory plug for prolonged periods of time with the engine off could cause the battery to discharge.
- Only use 12V electric accessories which are less than 10A in electric capacity.
- Close the cover when not in use.
- Some electronic devices can cause electronic interference when plugged into a vehicle's power outlet. These devices may cause excessive audio static and malfunctions in other electronic systems or devices used in your vehicle.
- Push the plug in as far as it will go. If good contact is not made, the plug may overheat and the fuse may open.
- Plug in battery equipped electronic devices with reverse current protection. Otherwise, the current from the battery may flow into the vehicle's electrical/electronic system and cause system malfunction.

⚠ WARNING - Electric shock

Do not put a finger or a foreign object (pen, etc.) into a power outlet and do not touch with a wet hand. You may receive an electric shock.

USB charger (if equipped)

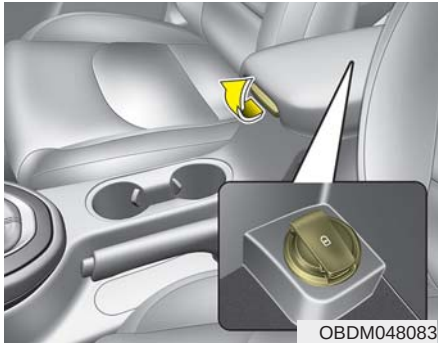

The USB car charger allows drivers to charge their digital devices their digital devices such as smartphones and tablets. Connect the device to the USB port using a manufacturer certified cable to begin charging.

Power is supplied to the USB car charger in either the ACC state or with the ignition on. In order to prevent battery discharge, only connect digital devices to the USB port with the ignition on. Use the display screen of the connected device to check its charging progress. Your smartphone or tablet may heat up while charging.

This does not impact life or function of the device. For safety reasons, charging will stop if the battery heats up to temperatures that will negatively affect the device. Not all devices are supported by the USB charger and may require additional adapters.

⚠ CAUTION

- ***Use the USB car charger with the ignition on. Otherwise, vehicle battery discharge may occur.***
- ***Use a manufacturer certified USB cable compatible with the digital device to be charged.***
- ***Make sure that any foreign object, drinks, and water do not come into contact with the USB car charger. Water or foreign objects can damage the USB charger.***
- ***Do not connect devices with current consumption exceeding 2.1A.***
- ***Do not connect devices that generate excessive electromagnetic noise. Doing so may interrupt the vehicle audio/AV electronic devices.***

(Continued)

(Continued)

- ***Ensure the devices are correctly connected, failing to do so may cause serious damage to the device. Please note that damages due to incorrect usage are not covered by warranty service.***

Wireless smart phone charging system (if equipped)

The wireless smart phone charging system is located in front of the center console.

Firmly close all doors, and turn the ignition to ACC or IGN ON. To start wireless charging, place the smart phone equipped with wireless charging function on the wireless charging pad.

For best wireless charging results, place the smart phone on the center of the charging pad.

The wireless charging system is designed for single usage with smart phones equipped with QI. Please refer to the smart phone accessory cover or the smart phone manufacturer homepage to check whether your smart phone supports QI function.

⚠ WARNING

If any metallic object such as a coin is located between the wireless charging system and the smart phone, the charging may be disrupted. Also, the metallic object may heat up and potentially damage the charging system.

⚠ WARNING - Distracted driving

Driving while distracted can result in a loss of vehicle control that may lead to an accident, severe personal injury, and death. The driver's primary responsibility is in the safe and legal operation of a vehicle, and use of any handheld devices, other equipment, or vehicle systems which take the driver's eyes, attention and focus away from the safe operation of a vehicle or which are not permissible by law should never be used during operation of the vehicle.

Wireless smart phone charging

1. Remove any object on the smart phone charging pad including the smart key. If there is any foreign object on the pad other than a smart phone, the wireless charging function may not operate properly.
2. Place the smart phone on the center of the wireless charging pad.
3. The indicator light will change to orange once the wireless charging begins. After the charging is complete, the orange light will change to green.
4. You can choose to turn the wireless charging function to either ON or OFF by selecting the USM on the instrument cluster. (Please refer to "Instrument Cluster" for details).

If the wireless charging does not work, gently move your smart phone around the pad until the charging indicator light turns yellow. Depending on the smart phone, the charging indicator light may not turn green even after the charging is complete.

If the wireless charging is not functioning properly, the orange light will blink and flash for ten seconds, then turn off. If that occurs, remove the smart phone from the pad and replace it on the pad again, or double check the charging status.

If you leave the smart phone on the charging pad when the vehicle ignition is in OFF, the vehicle will alert you through warning messages and sound (applicable for vehicles with voice guidance function) after the 'Good bye' function on the instrument cluster ends.

✻ NOTICE

- When the internal temperature of the wireless charging system rises above a set temperature, the wireless charging will cease to function. After the internal temperature drops below the threshold, the wireless charging function will resume.
- If there is any metallic object between the smart phone and the wireless charging pad, immediately remove the smart phone. Remove the metallic object after it has completely cooled down.
- The wireless charging may not function properly when there is a heavy accessory cover on the smart phone.
- The wireless charging will stop when using the wireless smart key search function; preventing radio wave disruption.
- The wireless charging will stop when the smart key is moved out of the vehicle with the ignition in ON.

(Continued)

(Continued)

- The wireless charging will stop when any of the doors are opened (applicable for vehicles equipped with smart keys).
- The wireless charging will stop when the vehicle is turned OFF.
- The wireless charging will stop when the smart phone is not in complete contact with the wireless charging pad.
- Items equipped with magnetic components such as: credit cards, telephone cards, bankbooks, transportation tickets etc, may become damaged during wireless charging.
- Place the smart phone on the center of the charge pad for best results. The smart phone may not charge when placed near the rim of the charging pad. If the smart phone is not charging, it may heat up excessively.
- For smart phones without built-in wireless charging system, an appropriate accessory has to be equipped in order to use the vehicle's wireless charging system.

(Continued)

(Continued)

- Smart phones of some manufacturers may display messages on weak current. This is due to the particular characteristic of the smart phone and does not imply a malfunction of the wireless charging system.
- The indicator light of some manufacturers' smart phones may still be yellow after the smart phone is fully charged. This is due to the particular characteristic of the smart phone and not a malfunction of the wireless charging system.
- When any smart phone without wireless charging capabilities or a metallic object is placed on the charging pad, a small noise may be heard. This sound is due to the vehicle discerning compatibility of the object placed on the charging pad. It does not affect your vehicle or the smart phone in any way.

This device complies with Industry Canada licence-exempt RSS standard(s).

Operation is subject to the following two conditions:

(1) This device may not cause interference, and

(2) This device must accept any interference, including interference that may cause undesired operation of the device.

Clothes hanger

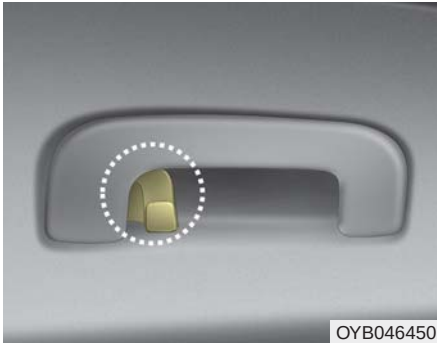

The clothes hanger is located on the roof of the rear seats.

⚠ CAUTION - Hanging clothing

Do not hang heavy clothes, since they may damage the hook.

⚠ WARNING

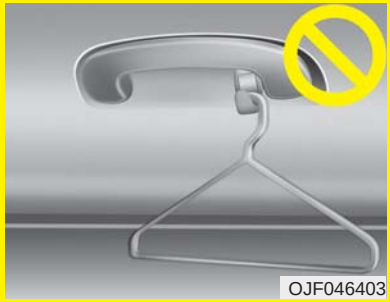

Do not hang other objects such as hangers or hard objects except clothes. Also, do not put heavy, sharp or breakable objects in the clothing pockets. In an accident or when the curtain air bag is inflated, it may cause vehicle damage or personal injury.

Floor mat anchor (s) (if equipped)

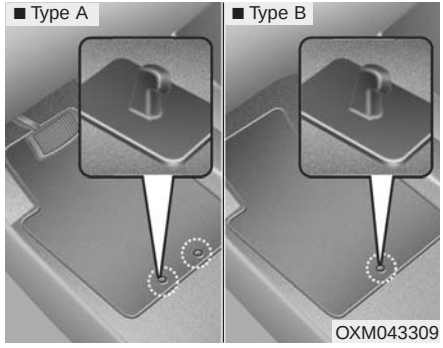

When using a floor mat on the front floor carpet, make sure it attaches to the floor mat anchor(s) in your vehicle. This keeps the floor mat from sliding forward.

⚠ WARNING - After market floor mat

Do not install aftermarket floor mats that are not capable of being securely attached to the vehicle's floor mat anchors.

Unsecured floor mats can interfere with pedal operation.

⚠ CAUTION

- ***Ensure to remove any protective film attached to the carpet before attaching a floor mat to the front floor carpet. Otherwise, the floor mat may move freely on the protective film and it could result in unintentional braking or accelerating.***
- ***Since the volatile organic compound may be continuously generated from various kinds of protective film attached for the protection of the interior material, be sure to remove it.***

The following must be observed when installing ANY floor mat to the vehicle.

- Ensure that the floor mats are securely attached to the vehicle's floor mat anchor(s) before driving the vehicle.
- Do not use ANY floor mat that cannot be firmly attached to the vehicle's floor mat anchors.
- Do not stack floor mats on top of one another (e.g. all-weather rubber mat on top of a carpeted floor mat). Only a single floor mat should be installed in each position.

✻ NOTICE

Your vehicle was manufactured with driver's side floor mat anchors that are designed to securely hold the floor mat in place. To avoid any interference with pedal operation, Kia recommends that only the Kia floor mat designed for use in your vehicle be installed.

AUDIO SYSTEM

✻ NOTICE

If you install an after market HID head lamp, your vehicle's audio and electronic device may malfunction.

❊ If your vehicle is equipped with an Infotainment (Audio, Video and Navigation) system, refer to the separately supplied manual for detailed information.

Antenna

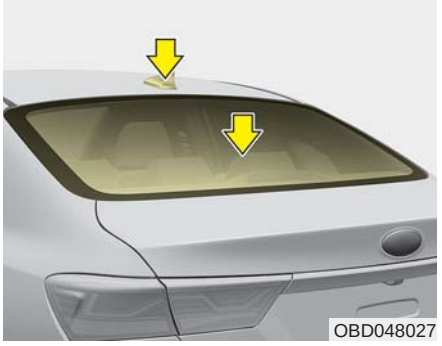

Glass antenna

Your vehicle uses a glass antenna to receive both AM and FM signals.

Shark fin antenna (if equipped)

The shark fin antenna will receive transmitted data.

⚠ CAUTION

- ***Do not clean the inside of the rear window glass or quarter glass with a cleaner or use a scraper to remove any foreign deposits as this may cause damage to the antenna elements.***
- ***Avoid adding any metallic coating such as Ni, Cd, and so on. These can interfere with AM/FM reception.***
- ***To prevent damage to the rear glass antenna, never use sharp instruments or window cleaner containing abrasives to clean the window. Clean the inside surface of the rear glass window with a piece of soft cloth.***
- ***When putting a sticker on the inside surface of the rear window, be careful not to damage the rear glass antenna.***
- ***Do not put sharp instruments nearby the rear glass antenna.***
- ***A tinted rear window may affect the proper functioning of the antenna.***

AUX, USB port (if equipped)

OBD048329

You can use the AUX port to connect audio devices and the USB port to plug in a USB device or iPod®.

✻ NOTICE

When using a portable audio device connected to the power outlet, noise may occur during playback. If this happens, use the power source of the portable audio device.

How vehicle audio works

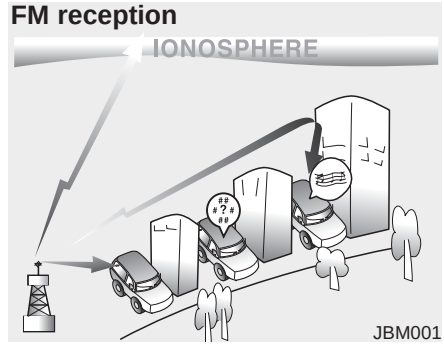

JBM001

AM and FM radio signals are broadcast from transmitter towers located around your city. They are intercepted by the radio antenna on your vehicle. This signal is then received by the radio and sent to your vehicle speakers.

When a strong radio signal has reached your vehicle, the precise engineering of your audio system ensures the best possible quality reproduction. However, in some cases the signal coming to your vehicle may not be strong and clear.

This can be due to many factors, such as the distance from the radio station, closeness of other strong radio stations or the presence of buildings, bridges or other large obstructions in the area.

AM reception

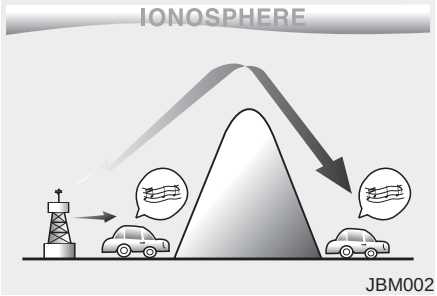

AM broadcasts can be received at greater distances than FM broadcasts. This is because AM radio waves are transmitted at low frequencies. These long, low frequency radio waves can follow the curvature of the earth rather than travelling straight out into the atmosphere. In addition, they curve around obstructions so that they can provide better signal coverage.

FM radio station

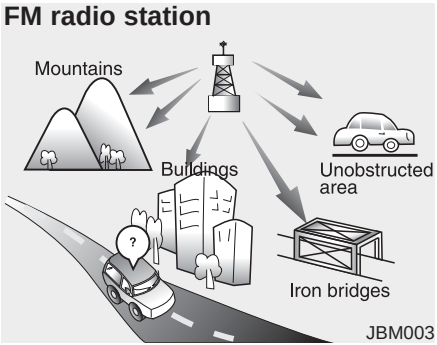

FM broadcasts are transmitted at high frequencies and do not bend to follow the earth's surface. Because of this, FM broadcasts generally begin to fade at short distances from the station. Also, FM signals are easily affected by buildings, mountains, or other obstructions. These can result in certain listening conditions which might lead you to believe a problem exists with your radio. The following conditions are normal and do not indicate radio trouble:

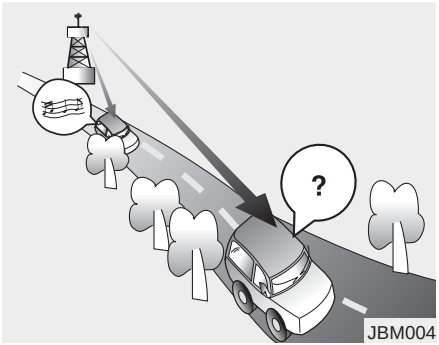

- Fading - As your vehicle moves away from the radio station, the signal will weaken and sound will begin to fade. When this occurs, we suggest that you select another stronger station.
- Flutter/Static - Weak FM signals or large obstructions between the transmitter and your radio can disturb the signal causing static or fluttering noises to occur. Reducing the treble level may lessen this effect until the disturbance clears.

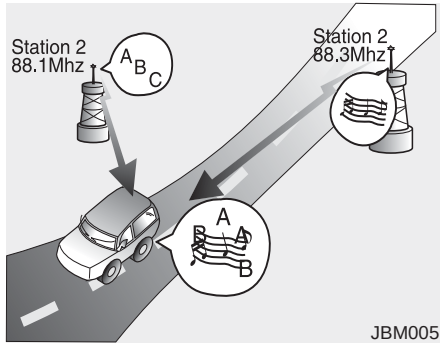

- Station Swapping - As a FM signal weakens, another more powerful signal near the same frequency may begin to play. This is because your radio is designed to lock onto the clearest signal. If this occurs, select another station with a stronger signal.
- Multi-Path Cancellation - Radio signals being received from several directions can cause distortion or fluttering. This can be caused by a direct and reflected signal from the same station, or by signals from two stations with close frequencies. If this occurs, select another station until the condition has passed.

Using a cellular phone or a two-way radio

When a cellular phone is used inside the vehicle, noise may be produced from the audio system. This does not mean that something is wrong with the audio equipment. If this occurs, try using the cellular phone as far away as possible from the audio equipment.

When using a communication system such as a cellular phone or a radio set inside the vehicle, a separate external antenna must be fitted. When a cellular phone or a radio set is used with an internal antenna alone, it may interfere with the vehicle's electrical system and adversely affect safe operation of the vehicle.

⚠ WARNING

Do not use a cellular phone while driving. Stop at a safe location to use a cellular phone.

⚠ WARNING - Driver Distraction

Driving while distracted can result in a loss of vehicle control that may lead to an accident, severe bodily injury, or death. The driver's primary responsibility is the safe and legal operation of the vehicle, and the use of any handheld devices, other equipment, or vehicle systems which take the driver's eyes, attention, and focus away from the safe operation of the vehicle, or which are not permissible by law, should never be used during the operation of the vehicle.

⚠ WARNING - Audio System

Do not disassemble, assemble, or modify this audio system. Such acts could result in fire or electric shock.

⚠ WARNING - Antenna

Do not touch the antenna during thunder or lightening as such acts may lead to lightning induced electric shock.

iPod®

iPod® is a trademark of Apple Inc.

Bluetooth® Wireless Technology

A compatible *Bluetooth*® Wireless Technology-enabled cell phone is required to use *Bluetooth*® Wireless Technology.

The Bluetooth® word mark and logos are registered trademarks owned by Bluetooth SIG, Inc. and any use of such marks by Kia is under license.

Other trademarks and trade names are those of their respective owners.

A Bluetooth® enabled cell phone is required to use *Bluetooth*® Wireless Technology.

Bluetooth® Wireless Technology phone compatibility can be checked by visiting http://www.kia.com.

Declaration of Conformity

IC

This device complies with Industry Canada's licence-exempt RSSs.

Operation is subject to the following two conditions:

(1) This device may not cause interference; and

(2) This device must accept any interference, including interference that may cause undesired operation of the device.

Le présent appareil est conforme aux CNR d'Industrie Canada applicables aux appareils radio exempts de licence.

L'exploitation est autorisée aux deux conditions suivantes: (1) l'appareil ne doit pas produire de brouillage, et

(2) l'utilisateur de l'appareil doit accepter tout brouillage radioélectrique subi, même si le brouillage est susceptible

d'en compromettre le fonctionnement.

Driving your vehicle

Before driving 5-5
- Before entering vehicle 5-5
- Necessary inspections 5-5
- Before starting 5-5

Key positions 5-7
- Illuminated ignition switch 5-7
- Ignition switch position 5-7
- Starting the engine 5-9
- Stopping the gasoline engine (Manual transmission) . 5-10

Engine start/stop button 5-11
- Illuminated engine start/stop button 5-11
- Engine start/stop button position 5-11
- Starting the engine 5-14
- Stopping the engine (Manual transmission) 5-17

Manual transmission 5-18
- Manual transmission operation 5-18
- Good driving practices 5-21

Dual Clutch Transmission (DCT) 5-22
- Dual clutch transmission operation 5-22
- LCD display for transmission temperature and warning message 5-24
- Good driving practices 5-34

Intelligent Variable Transmission (IVT) 5-35
- Intelligent Variable Transmission (IVT) operation . 5-35
- Shift lock system 5-40
- Good driving practices 5-41

Brake system 5-44
- Power brakes 5-44
- Parking brake 5-46
- Anti-lock Brake System (ABS) 5-49
- Electronic Stability Control (ESC) 5-50
- Vehicle Stability Management (VSM) 5-55
- Hill-start Assist Control (HAC) 5-57
- Good braking practices 5-57

Forward Collision-avoidance Assist (FCA) (Camera type) 5-59
- System setting and activation 5-59
- FCA warning message and system control 5-61
- Brake operation 5-62
- FCA front view camera sensor 5-63
- System malfunction 5-65
- Limitation of the system 5-67

Forward Collision-avoidance Assist (FCA) (Camera + Radar type) 5-72
- System setting and activation 5-72
- FCA warning message and system control 5-74
- Brake operation 5-75

• Sensor to detect the distance from the vehicle in front (front radar/camera) 5-76
• System malfunction 5-78
• Limitation of the system 5-80
• Limitation of the system 5-83
• Recognizing pedestrians 5-84
Cruise Control System 5-86
• To set cruise control speed 5-87
• To increase cruise control set speed 5-87
• To decrease the cruising speed 5-88
• To temporarily accelerate with the cruise control on . 5-88
• To cancel cruise control, do one of the following . . . 5-88
• To resume cruising speed at more than approximately 30 km/h (20 mph) 5-89
• To turn cruise control off, do one of the following . . 5-89
Smart Cruise Control 5-90
• Smart Cruise Control switch 5-92
• Smart Cruise Control speed 5-92
• Vehicle to vehicle distance setting 5-98
• When the lane ahead is clear 5-98
• When there is a vehicle ahead of you in your lane . 5-99
• To adjust the sensitivity of smart cruise control . . 5-103
• To convert to cruise control mode 5-103
• Limitations of the system 5-104
Drive mode integrated control system 5-111
Blind-spot Collision Warning (BCW) 5-115
• BCW (Blind-Spot Collision Warning)/ LCA (Lane Change Assist) 5-116
• RCCW (Rear Cross-Traffic Collision Warning) . . 5-119
• Driver's Attention 5-123
Lane Keeping Assist (LKA) system 5-125
• LKA operation 5-126
• Driver's attention 5-131
• LKA malfunction 5-132
• LKA function change 5-133
Driver Attention Warning (DAW) 5-134
• System setting and activation 5-134
• Resetting the system 5-136
• System disabled 5-136
• System malfunction 5-137
Economical operation 5-139
Special driving conditions 5-141
• Hazardous driving conditions 5-141
• Rocking the vehicle 5-141
• Smooth cornering 5-142
• Driving at night 5-142
• Driving in the rain 5-143
• Driving in flooded areas 5-144

• Driving off-road 5-144
• Highway driving 5-144
Winter driving 5-145
• Snowy or icy conditions 5-145
• Use high quality ethylene glycol coolant 5-146
• Check battery and cables 5-146
• Change to "winter weight" oil if necessary 5-146
• Check spark plugs and ignition system. 5-146
• To keep locks from freezing 5-146
• Use approved window washer anti-freeze in system 5-146
• Don’t let your parking brake freeze 5-147
• Don't let ice and snow accumulate underneath . . . 5-147
• Carry emergency equipment 5-147
Trailer towing 5-147
Vehicle load limit 5-148
• Tire and loading information label 5-148
• Certification label 5-152
Vehicle weight 5-153
• Base curb weight 5-153
• Vehicle curb weight 5-153
• Cargo weight 5-153
• GAW (Gross Axle Weight) 5-153
• GAWR (Gross Axle Weight Rating) 5-153
• GVW (Gross Vehicle Weight) 5-153
• GVWR (Gross Vehicle Weight Rating) 5-153

Be sure the exhaust system does not leak.

The exhaust system should be checked whenever the vehicle is raised to change the oil or for any other purpose. If you hear a change in the sound of the exhaust or if you drive over something that strikes the under side of the vehicle, have the exhaust system checked as soon as possible by an authorized Kia dealer.

⚠ WARNING - Engine exhaust

Do not inhale exhaust fumes or leave your engine running in a enclosed area for a prolonged time. Exhaust fumes contain carbon monoxide, a colorless, odorless gas that can cause unconsciousness and death by asphyxiation.

⚠ WARNING - Open trunk

Do not drive with the trunk open. Poisonous exhaust gases can enter the passenger compartment. If you must drive with the trunk open proceed as follows:

1. **Close all windows.**
2. **Open side vents.**
3. **Set the air intake control at "Fresh", the air flow control at "Floor" or "Face" and the fan at the highest speed.**

BEFORE DRIVING

Before entering vehicle

- Be sure that all windows, outside mirror(s), and outside lights are clean.
- Check the condition of the tires.
- Check under the vehicle for any sign of leaks.
- Be sure there are no obstacles behind you if you intend to back up.

Necessary inspections

Fluid levels, such as engine oil, engine coolant, brake fluid, and washer fluid should be checked on a regular basis, at the exact interval depending on the fluid. Further details are provided in chapter 7, “Maintenance”.

⚠ WARNING - Distracted driving

Focus on the road while driving. The driver's primary responsibility is in the safe and legal operation of the vehicle. Use of any handled devices, other equipment or vehicle systems that distract the driver should not be used during vehicle operation.

Before starting

- Close and lock all doors.
- Position the seat so that all controls are easily reached.
- Buckle your seat belt.
- Adjust the inside and outside rearview mirrors.
- Be sure that all lights work.
- Check all gauges.
- Check the operation of warning lights when the ignition switch is turned to the ON position.
- Release the parking brake and make sure the brake warning light goes out.

For safe operation, be sure you are familiar with your vehicle and its equipment.

⚠ WARNING - Fire risk

When you intend to park or stop the vehicle with the engine on, be careful not to depress the accelerator pedal for a long period of time. It may overheat the engine or exhaust system and cause fire.

⚠ WARNING - Check surroundings

Always check the surrounding areas near your vehicle for people, especially children, before putting a vehicle into D (Drive) or R (Reverse).

⚠ WARNING - Loose objects

Securely store items in your vehicle. When you make a sudden stop or turn the steering wheel rapidly, loose objects may drop on the floor and could interfere with the operation of the foot pedals, possibly causing an accident.

⚠ WARNING - Driving while intoxicated

Do not drive while intoxicated. Drinking and driving is dangerous. Even a small amount of alcohol will affect your reflexes, perceptions and judgment.

Driving while under the influence of drugs is as dangerous as or more dangerous than driving drunk.

⚠ WARNING - Proper footwear

Always wear appropriate shoes when operating your vehicle. Unsuitable shoes (high heels, ski boots, sandals, etc.) may interfere with your ability to use the brake and accelerator pedals.

KEY POSITIONS (IF EQUIPPED)

Illuminated ignition switch

OBDM058128N

Whenever a front door is opened, the ignition switch will illuminate for your convenience, provided the ignition switch is not in the ON position. The light will go off immediately when the ignition switch is turned on. It will also go off after about 30 seconds when the door is closed.

Ignition switch position

OBDM058130N

LOCK (1)

The ignition key can be removed only in the LOCK position.

ACC (Accessory) (2)

The electrical accessories are operative. If difficulty is experienced turning the ignition switch to the ACC position, turn the key while turning the steering wheel right and left to release the tension.

ON (3)

The warning lights can be checked before the engine is started. This is the normal running position after the engine is started.

Do not leave the ignition switch ON if the engine is not running to prevent battery discharge.

START (4)

Turn the ignition switch to the START position to start the engine. The engine will crank until you release the key; then it returns to the ON position. The brake warning light can be checked in this position.

The anti-theft steering column lock (if equipped) is not a substitute for the parking brake. Before leaving the driver's seat, always make sure the shift lever is engaged in P (Park) for intelligent variable transmission, set the parking brake fully and shut the engine off. Unexpected and sudden vehicle movement may occur if these precautions are not taken.

⚠ WARNING - Ignition switch

Never turn the ignition switch to LOCK or ACC while the vehicle is moving. This would result in loss of directional control and braking function, which could cause an accident.

✻ NOTICE

If you leave the ignition switch to the ACC or ON position for a long time, the battery may discharge.

⚠ WARNING - Key holder

Do not attach small purses, multiple keys, or any other heavy accessories to the driver's key chain used to start the vehicle. This may cause the inserted key to inadvertently change the ignition position to the ACC position while the vehicle is moving, thereby increasing the risk of an accident and deactivating several safety features.

⚠ WARNING - Leaving the Vehicle

To avoid unexpected or sudden vehicle movement, never leave your vehicle if the transmission is not locked in the P (Park) position and the parking brake is not fully engaged. Before leaving the driver's seat, always make sure the shift lever is engaged in P (Park), set the parking brake fully and shut the

Starting the engine

⚠ WARNING - Proper footwear

Always wear appropriate shoes when operating your vehicle. Unsuitable shoes (high heels, ski boots, sandals, etc.) may interfere with your ability to use the brake and accelerator pedal.

1. Make sure the parking brake is applied.
2. **Manual Transmission -** Depress the clutch pedal fully and shift the transmission into Neutral. Keep the clutch pedal and brake pedal depressed while turning the ignition switch to the start position.

   Dual clutch transmission/ Intelligent Variable Transmission - Place the transmission shift lever in P (Park). Depress the brake pedal fully.

   You can also start the engine when the shift lever is in the N (Neutral) position.
3. Turn the ignition switch to START and hold it there until the engine starts (a maximum of 10 seconds), then release the key.

   *It should be started **without depressing the accelerator.***
4. Do not wait for the engine to warm up while the vehicle remains stationary.

   Start driving at moderate engine speeds. (Extreme and/or excessive accelerating and decelerating should be avoided.)

⚠ WARNING - Steering wheel

Never reach for any controls through the steering wheel while the vehicle is in motion. The presence of your hand or arm in this area could cause a loss of vehicle control.

If the engine stalls while you are in motion, do not attempt to move the shift lever to the P (Park) position. If traffic and road conditions permit, you may put the shift lever in the N (Neutral) position while the vehicle is still moving and turn the ignition switch to the START position in an attempt to restart the engine.

⚠ CAUTION - Starter

Do not engage the starter for more than 10 seconds. If the engine stalls or fails to start, wait 5 to 10 seconds before re-engaging the starter. Improper use of the starter may damage it.

Stopping the gasoline engine (Manual Transmission)

1. Make sure the vehicle is completely stopped and keep the clutch pedal and brake pedal depressed.
2. Shift the transmission into Neutral while depressing the clutch pedal and brake pedal.
3. Engage the parking brake while depressing the brake pedal.
4. Turn the ignition key to the LOCK position and remove it.

ENGINE START/STOP BUTTON (IF EQUIPPED)

Illuminated engine start/stop button

OBD058001

Whenever the front door is opened, the engine start/stop button will illuminate for your convenience. The light will go off after about 30 seconds when the door is closed. It will also go off immediately when the theft-alarm system is armed.

Engine start/stop button position

OFF

With manual transmission

To turn off the engine (START/RUN position) or vehicle power (ON position), stop the vehicle, then press the engine start/stop button.

With Dual clutch transmission /Intelligent Variable Transmission

To turn off the engine (START/RUN position) or vehicle power (ON position), press the engine start/stop button with the shift lever in the P (Park) position. When you press the engine start/stop button without the shift lever in the P (Park) position, the engine start/stop button will not change to the OFF position but to the ACC position.

Vehicles equipped with anti-theft steering column lock

The steering wheel locks when the engine start/stop button is in the OFF position to protect you against theft.

It locks when the door is opened.

If the steering wheel is not locked properly when you open the driver's door, the warning chime will sound. Try locking the steering wheel again. If the problem is not solved, have the system checked by a professional workshop. Kia recommends to visit an authorized Kia dealer/service partner.

In addition, if the engine start/stop button is in the OFF position after the driver's door is opened, the steering wheel will not lock and the warning chime will sound. If that occurs, close the door. Then the steering wheel will lock and the warning chime will stop.

✻ NOTICE

If the steering wheel doesn't unlock properly, the engine start/stop button will not work. Press the engine start/stop button while turning the steering wheel right and left to release the tension.

✻ NOTICE

You are able to turn off the engine (START/RUN) or vehicle power (ON), only when the vehicle is not in motion.

⚠ CAUTION

In an emergency situation while the vehicle is in motion, you are able to turn the engine off and to the ACC position by pressing the engine start/stop button for more than 2 seconds or 3 times successively within 3 seconds.

If the vehicle is still moving, to restart the vehicle:

- ***Manual transmission - Press the engine start/stop button with shift lever in neutral and clutch pedal depressed.***
- ***Dual clutch transmission/ Intelligent Variable Transmission - Press the engine start/stop button when vehicle speed is 5 km/h or over.***

ACC(Accessory)

OJF058312

With manual transmission

Press the engine start/stop button when the button is in the OFF position without depressing the clutch pedal.

With Dual clutch transmission/ Intelligent Variable Transmission

Press the engine start/stop button while it is in the OFF position without depressing the brake pedal.

The steering wheel unlocks and electrical accessories are operational.

If the engine start/stop button is in the ACC position for more than 1 hour, the button is turned off automatically to prevent battery discharge.

ON

With manual transmission

Press the engine start/stop button when the button is in the ACC position without depressing the clutch pedal.

With Dual clutch transmission/ Intelligent Variable Transmission

Press the engine start/stop button while it is in the ACC position without depressing the brake pedal.

The warning lights can be checked before the engine is started. Do not leave the engine start/stop button in the ON position for a long time. The battery may discharge, because the engine is not running.

START/RUN

With manual transmission

To start the engine, depress the clutch pedal and brake pedal, then press the engine start/stop button with the shift lever in the N (Neutral) position.

With Dual clutch transmission/ Intelligent Variable Transmission

To start the engine, depress the brake pedal and press the engine start/stop button with the shift lever in the P (Park) or the N (Neutral) position. For your safety, start the engine with the shift lever in the P (Park) position.

✻ NOTICE

If you press the engine start/stop button without depressing the clutch pedal for manual transmission vehicles or without depressing the brake pedal for manual transmission/ Dual clutch transmission/Intelligent Variable Transmission vehicles, the engine will not start and the engine start/stop button changes as follow: OFF ➔ACC ➔ ON ➔ OFF or ACC

✻ NOTICE

If you leave the engine start/stop button in the ACC or ON position for a long time, the battery will discharge.

⚠ WARNING

- **Never press the engine start/stop button while the vehicle is in motion. This could result in loss of directional control and braking function, which could cause an accident.**
- **The anti-theft steering column lock is not a substitute for the parking brake. Before leaving the driver's seat, always make sure the shift lever is engaged in P (Park), set the parking brake fully and shut the engine off. Unexpected and sudden vehicle movement may occur if these precautions are not taken.**

(Continued)

(Continued)

- **Never reach for the engine start / stop button or any other controls through the steering wheel while the vehicle is in motion. The presence of your hand or arm in the area could cause loss of vehicle control, an accident and serious bodily injury or death.**
- **Do not place any movable objects around the driver's seat as they may move while driving, interfere with the driver and lead to an accident.**

Starting the engine

⚠ WARNING

- **Always wear appropriate shoes when operating your vehicle. Unsuitable shoes (high heels, ski boots,etc.) may interfere with your ability to use the brake, accelerator and clutch pedal.**
- **Do not start the vehicle with the accelerator pedal depressed. The vehicle can move and lead to an accident.**
- **Wait until the engine rpm is normal. The vehicle may suddenly move if the brake pedal is released when the rpm is high.**

Starting the engine

1. Carry the smart key or place it inside the vehicle.
2. Make sure the parking brake is firmly applied.
3. **Manual Transmission -** Depress the clutch pedal fully and shift the transmission into Neutral. Keep the clutch pedal and brake pedal depressed while starting the engine.

   Dual clutch transmission/ Intelligent Variable Transmission - Place the transmission shift lever in P (Park). Depress the brake pedal fully.

   You can also start the engine when the shift lever is in the N (Neutral) position.
4. Press the engine start/stop button.

It should be started without depressing the accelerator pedal.

5. Do not wait for the engine to warm up while the vehicle remains stationary. Start driving at moderate engine speeds. (Extreme and/or excessive accelerating and decelerating should be avoided.)

Starting and stopping the engine for turbocharger intercooler

1. Do not race or accelerate the engine immediately after starting.

   If the engine is cold, idle for several seconds to ensure sufficient lubrication in the turbocharger unit.
2. After high speed or extended driving, requiring a heavy engine load, idle the engine about 1 minute before turning it off.

   This idle time will allow the turbocharger to cool prior to shutting the engine off.

⚠ CAUTION

Do not turn the engine off immediately after it has been subjected to a heavy load. Doing so may cause severe damage to the engine or turbocharger unit.

Starting the engine with smart key

- Even if the smart key is in the vehicle, if it is far away from you, the engine may not start.
- When the engine start/stop button is in the ACC position or above, if any door is opened, the system checks for the smart key. If the smart key is not in the vehicle, the "🚗" indicator and a message "Key is not in the vehicle" will appear on the instrument cluster and LCD window. And if all doors are closed, the chime will sound for 5 seconds. The indicator or warning will turn off while the vehicle is moving. Always have the smart key with you.

⚠ WARNING

The engine will start only when the smart key is in the vehicle. Never allow children or any person who is unfamiliar with the vehicle touch the engine start/stop button or related parts. Pushing the engine start/stop button while the smart key is in the vehicle may result in unintended engine activation and/or unintended vehicle movement.

⚠ CAUTION

If the engine stalls while the vehicle is in motion, do not attempt to move the shift lever to the P (Park) position. If the traffic and road conditions permit, you may put the shift lever in the N (Neutral) position while the vehicle is still moving and press the engine start/stop button in an attempt to restart the engine.

OBD058002

✻ NOTICE

- **If the battery is weak or the smart key does not work correctly, you can start the engine by pressing the engine start/stop button with the smart key.**
  The side with the lock button should contact the engine start/stop button directly. When you press the engine start/stop button directly with the smart key, the smart key should contact the button at a right angle.

(Continued)

(Continued)

- **When the stop lamp fuse is blown, you cannot start the engine normally.**
  Replace the fuse with a new one. If it is not possible, you can start the engine by pressing the engine start/ stop button for 10 seconds while it is in the ACC position. The engine can start without depressing the brake pedal. But for your safety, always depress the brake pedal and clutch pedal (if equipped) before starting the engine.

⚠ CAUTION

- ***Do not press the engine start/stop button for more than 10 seconds except when the stop lamp fuse is blown.***
- ***Do not turn the ignition switch to the START position with the engine running. It may damage the starter.***

Stopping the engine (Manual Transmission)

1. Make sure the vehicle is completely stopped and keep the clutch pedal and brake pedal depressed.
2. Shift the transmission into Neutral while depressing the clutch pedal and brake pedal.
3. Engage the parking brake while depressing the brake pedal.
4. Turn the ignition key to the LOCK position and remove it.

MANUAL TRANSMISSION (IF EQUIPPED)

Manual transmission operation

⇨ The shift lever can be moved without pulling the button (1).

➡ The button (1) should be pressed when moving the shift lever into reverse.

OYB056058

The manual transmission has 6 forward gears.

This shift pattern is imprinted on the shift knob. The transmission is fully synchronized in all forward gears so shifting to either a higher or a lower gear is easily accomplished.

Depress the clutch pedal down fully while shifting, then release it slowly.

If your vehicle is equipped with an ignition lock switch, the engine will not start when starting the engine without depressing the clutch pedal.

The shift lever must be returned to the neutral position before shifting into R (Reverse).

Push the button located immediately below the shift knob and pull the gearshift lever to the left sufficiently, and then shift into the reverse (R) gear position.

Make sure the vehicle is completely stopped before shifting into R (Reverse).

Never operate the engine with the tachometer (rpm) in the red zone.

⚠ CAUTION

- ***When downshifting from fifth gear to fourth gear, caution should be taken not to inadvertently press the shift lever sideways in such a manner that the second gear is engaged. Such a drastic downshift may cause the engine speed to increase to the point that the tachometer will enter the red-zone. Such over-revving of the engine and transmission may possibly cause engine damage.***
- ***Do not downshift more than 2 gears or downshift the gear when the engine is running at high speed (5,000 RPM or higher). Such a downshift may damage the engine, clutch and the transmission.***

- During cold weather, shifting may be difficult until the transmission lubricant is warmed up. This is normal and not harmful to the transmission.
- If you've come to a complete stop and it's hard to shift into the 1st or R (Reverse), leave the shift lever at the N (Neutral) position and release the clutch. Press the clutch pedal back down, and then shift into the 1st or R (Reverse) gear position.

⚠ CAUTION

- ***To avoid premature clutch wear and damage, do not drive with your foot resting on the clutch pedal. Also, don't use the clutch to hold the vehicle stopped on an uphill grade, while waiting for a traffic light, etc.***
- ***Do not use the shift lever as a handrest during driving, as this can result in premature wear of the transmission shift forks.***
- ***To prevent possible damage to the clutch system, do not start with the 2nd (second) gear engaged except when you start on a slippery road.***

⚠ WARNING

- **Before leaving the driver's seat, always set the parking brake fully and shut the engine off. Then make sure the transmission is shifted into 1st gear when the vehicle is parked on a level or uphill grade, and shifted into R (Reverse) on a downhill grade. Unexpected and sudden vehicle movement can occur if these precautions are not followed in the order identified.**
- **Do not use the engine brake (shifting from a high gear to lower gear) rapidly on slippery roads.**

  The vehicle may slip, causing an accident.

Using the clutch

The clutch should be pressed all the way to the floor before shifting, then released slowly. The clutch pedal should always be fully released while driving. Do not rest your foot on the clutch pedal while driving. This can cause unnecessary wear. Do not partially engage the clutch to hold the vehicle on an incline. This causes unnecessary wear. Use the foot brake or parking brake to hold the vehicle on an incline. Do not operate the clutch pedal rapidly and repeatedly.

⚠ CAUTION

When operating the clutch pedal, press the clutch pedal down fully. If you don't press the clutch pedal fully, the clutch may be damaged or noise may occur.

Downshifting

When you must slow down in heavy traffic or while driving up steep hills, downshift before the engine starts to labor. Downshifting reduces the chance of stalling and gives better acceleration when you again need to increase your speed. When the vehicle is traveling down steep hills, downshifting helps maintain safe speed and prolongs brake life.

⚠ WARNING
- Using the clutch

Depress the clutch pedal as far as possible. Be aware not to apply the pedal again before it returns to the normal position. If the pedal is repeatedly depressed before returning to its normal position, the clutch system might be damaged.

Do not overload the vehicle. Starting or driving a vehicle in this situation generates too much frictional heat to the clutch disk which might cause damage to the clutch cover and disk.

When starting the vehicle or driving backwards, releasing the clutch pedal too soon after shifting the lever might turn off the engine and lead to an accident.

Good driving practices

- Never take the vehicle out of gear and coast down a hill. This is extremely hazardous. Always leave the vehicle in gear.
- Don't "ride" the brakes. This can cause them to overheat and malfunction. Instead, when you are driving down a long hill, shift to a lower gear. When you do this, engine braking will help slow down the vehicle.
- Slow down before shifting to a lower gear. This will help avoid over-revving the engine, which can cause damage.
- Slow down when you encounter cross winds. This gives you much better control of your vehicle.
- Be sure the vehicle is completely stopped before you attempt to shift into reverse. The transmission can be damaged if you do not.

⚠ WARNING

Exercise extreme caution when driving on a slippery surface. Be especially careful when braking, accelerating or shifting gears. On a slippery surface, an abrupt change in vehicle speed can cause the drive wheels to lose traction and the vehicle to lose control.

⚠ WARNING

- **Always buckle-up! In a collision, an unbelted occupant is significantly more likely to be seriously injured or killed than a properly belted occupant.**
- **Avoid high speeds when cornering or turning.**
- **Do not make quick steering wheel movements, such as sharp lane changes or fast, sharp turns.**
- **The risk of rollover is greatly increased if you lose control of your vehicle at highway speeds.**
- **Loss of control often occurs if two or more wheels drop off the roadway and the driver oversteers to reenter the roadway.**
- **In the event your vehicle leaves the roadway, do not steer sharply. Instead, slow down before pulling back into the travel lanes.**
- **Never exceed posted speed limits.**

DUAL CLUTCH TRANSMISSION (DCT) (IF EQUIPPED)

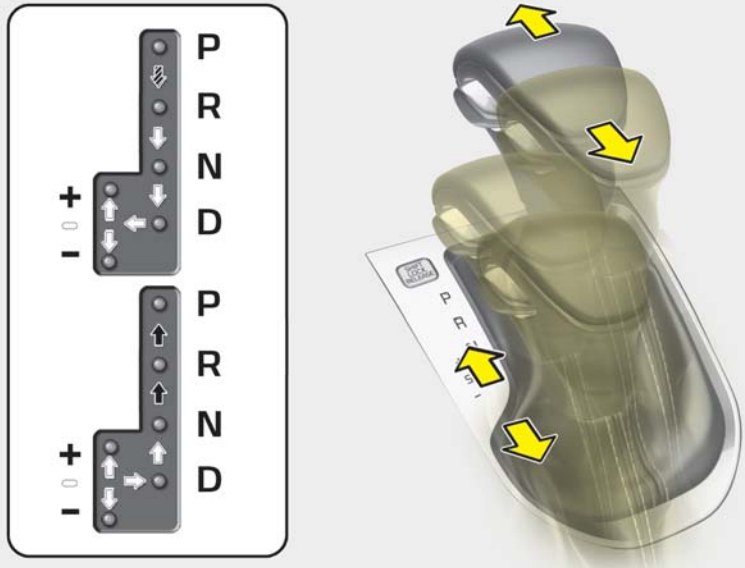

Depress the brake pedal and the lock release button when shifting.

Press the lock release button when shifting.

The shift lever can be shifted freely.

❊ To move the shift lever from/to P(Parking) or between R(Reverse) and D(Drive), you must depress the brake pedal for the vehicle to stand still.

OBD058005

Dual clutch transmission operation

The dual clutch transmission has 7 forward speeds and one reverse speed.

The individual speeds are selected automatically in the D (Drive) position.

⚠ WARNING

To reduce the risk of serious injury or death:

- **ALWAYS check the surrounding areas near your vehicle for people, especially children, before shifting a vehicle into D (Drive) or R (Reverse).**
- **Before leaving the driver's seat, always make sure the shift lever is in the P (Park) position, then set the parking brake, and place the ignition switch in the LOCK/OFF position. Unexpected and sudden vehicle movement can occur if these precautions are not followed.**
- **Do not use engine braking (shifting from a high gear to lower gear) rapidly on slippery roads. The vehicle may slip causing an accident.**

- The Dual Clutch Transmission gives the driving feel of a manual transmission, yet provides the ease of a fully automatic transmission. Unlike a traditional automatic transmission, the gear shifting can be felt (and heard) on the dual clutch transmission
  - Think of it as an automatically shifting manual transmission.
  - Shift into Drive mode and get fully automatic shifting, similar to a conventional automatic transmission.
- Dual clutch transmission adopts a dry-type dual clutch, which is different from the torque converter of a automatic transmission, and shows better acceleration performance during driving, but the initial launch might be little bit slower than an Automatic Transmission.
- The dry-type clutch transfers torque and provides a direct driving feeling which may feel different from a conventional automatic transmission with a torque converter. This may be more noticeable when starting from a stop or low vehicle speed.
- When rapidly accelerating at low vehicle speed, the engine may rev at a higher rpm depending on vehicle drive condition.
- For a smooth launching uphill, press down the accelerator pedal smoothly depending on the current conditions.
- If you release your foot from the accelerator pedal at low vehicle speed, you may feel strong engine braking, which is similar to a manual transmission.
- When driving downhill, you may use Sports Mode to downshift to a lower gear in order to control your speed without using the brake pedal excessively.
- When you turn the engine on and off, you may hear clicking sounds as the system goes through a self test. This is a normal sound for the Dual Clutch Transmission.

⚠ WARNING

In the case of a transmission failure, the vehicle may not move and the position indicator (D, R) will blink on the cluster. In this situation, have the system checked by a professional workshop. Kia recommends to visit an authorized Kia dealer/service partner.

LCD display for transmission temperature and warning message

Transmission temperature Gauge

■ Type A

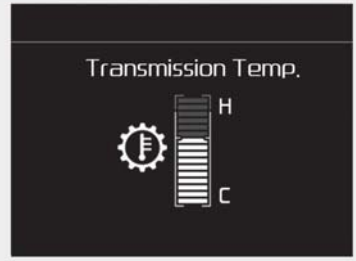

OBDM059141L

■ Type B

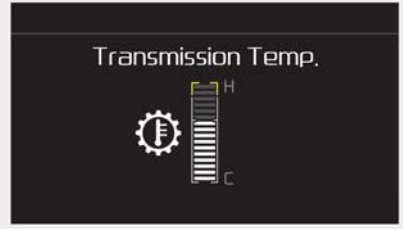

OBDM059142L

■ Type A

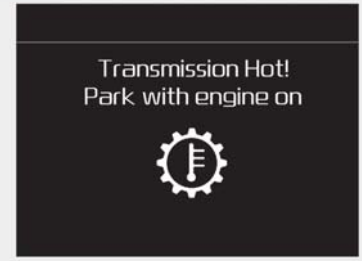

OBDM059147L

■ Type B

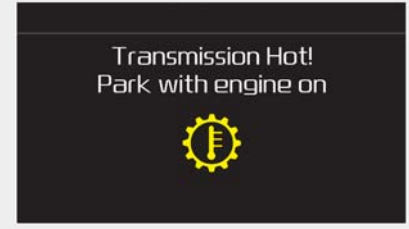

OBDM059148L

- Select trip computer mode on the LCD display and move to the transmission temperature screen to see the temperature of the dual clutch transmission.

- Try to drive so that the temperature gauge does not indicate a high temperature/overheating. When the transmission is overheated, the warning message will display on the LCD. Follow the displayed message.
- The transmission temperature is displayed in three colors (white, orange and red) as the temperature increases (if equipped with the color type cluster). The temperature gauge is displayed in one color (white) if equipped with the mono type cluster.
- An orange temperature gauge is dis-played right before the warning message appears on the LCD display. (if equipped)

⚠ CAUTION

An increased or high temperature on the transmission temperature gauge can appear when the vehicle is on an incline and stopped for a long time using the accelerator pedal and without depressing the brake pedal.

■ Type A

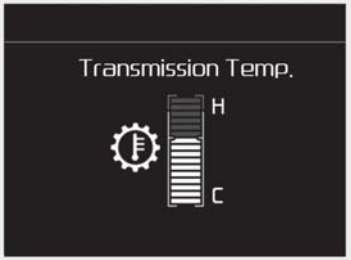

OBDM059141L

■ Type B

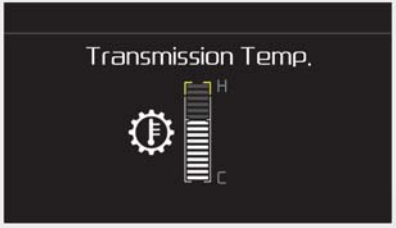

OBDM059142L

Normal (below marking 10)

- In order to maintain the optimal gear shift performance, drive so that the temperature gauge is below the point **(below marking10)**.

✻ NOTICE

The transmission temperature may increase rapidly if clutch slip occurs excessively due to repeated stop-and-go driving on steep grades and when Hill Hold is maintained for a long time. In order to prevent excessive temperature increase, use the brake during low speed driving or when stopping the vehicle on a hill.

■ Type A

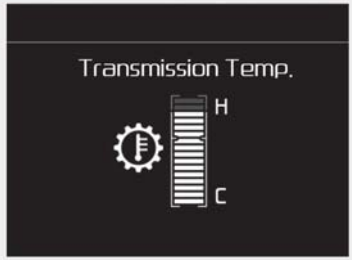

OBDM059143L

■ Type B

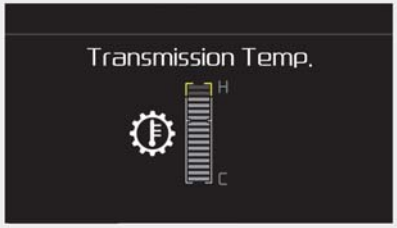

OBDM059144L

Before entering High/Overheat (from marking 10 to 14)

- This zone shows what the dual clutch temperature of the DCT is close to entering the high/overheat zone. When the clutch temperature is within this zone (from marking 10 to 14), drive with minimal clutch slip so that that the temperature goes below marking 10.
- If the dual clutch temperature continues to increase and reaches marking 14, the warning alarm sounds and the temperature gauge pops up on the cluster. The DCT warning message is not displayed.

■ Type A

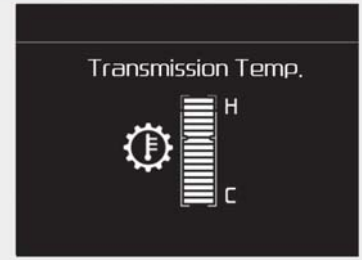

OBDM059145L

■ Type B

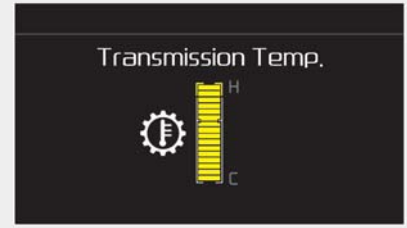

OBDM059146L

High/Overheat (from marking 15 to 16)

- This zone shows that the dual clutch temperature of the DCT has entered the high/overheat zone.

The DCT warning alarm sounds, the warning message is displayed on the cluster and the temperature gauge disappears from the cluster. **Follow the displayed warning message.**

- To check the temperature status of the dual clutch when overheated, move to the temperature gauge screen by selecting the trip computer mode. Then, you can check the temperature status of the dual clutch.

DCT warning messages

■ Type A

OBDM059149L

■ Type B

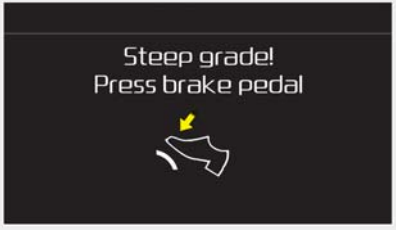

OBDM059150L

This warning message is displayed when the vehicle is driven slowly on a grade and the vehicle detects that the brake pedal is not applied.

Steep grade

Driving up hills or on steep grades:

- To hold the vehicle on an incline, use the foot brake or the parking brake.
- When in stop-and-go traffic on an incline, keep some distance ahead before moving the vehicle forward. Then hold the vehicle on the incline with the foot brake.
- If the vehicle is held on a hill by applying the accelerator pedal or by creeping with the brake pedal dis-engaged, the clutch and transmission may overheat which can result in damage. In this situation, a warning message will appear on the LCD display.
- If the LCD warning is active, the foot brake must be applied.
- Ignoring the warnings can lead to damage to the transmission.

■ Type A

OBDM059143L

■ Type B

OBDM059144L

■ Type A

OBDM059151L

■ Type B

OBDM059152L

Transmission high temperature

- Under certain conditions, such as repeated stop-and-go launches on steep grades, sudden take off or acceleration, or other harsh driving conditions, the transmission clutch temperatures will increase excessively. Eventually, the clutch in the transmission could become overheated.
- When the clutch is overheated, the safe protection mode engages and the gear position indicator on the cluster blinks with a chime. In this situation, “Transmission temp. is high! Stop safely” warning message will appear on the LCD display, and driving may not be smooth.
- If this occurs, pull over to a safe location, stop the vehicle with the engine running, apply the brakes, shift the vehicle to P (Park), and allow the transmission to cool.
- If you ignore this warning, the driving condition may become worse. You may experience abrupt shifts, frequent shifts, or jerkiness. To return to normal driving condition, stop the vehicle and apply the foot brake or shift into P (Park).

  Then allow the transmission to cool for a few minutes with the engine on before driving off.
- When possible, drive the vehicle smoothly.

■ Type A

OBDM059147L

■ Type B

OBDM059148L

■ Type A

OBDM059153L

■ Type B

OBDM059154L

■ Type A

OBDM059155L

■ Type B

OBDM059156L

Transmission overheated

- If the vehicle continues to be driven and the clutch temperatures reach the maximum temperature limit, the “Transmission Hot! Park with engine on” warning will be displayed. When this occurs, the clutch is disabled until the clutch cools to normal temperatures.
- The warning will display a time to wait for the transmission to cool.
- If this occurs, pull over to a safe location, stop the vehicle with the engine running, apply the brakes, shift the vehicle to P (Park), and allow the transmission to cool.
- When the message “Trans cooled. Resume driving.” appears, you can continue to drive your vehicle.
- When possible, drive the vehicle smoothly.

If any of the warning messages in the LCD display continue to blink, for your safety, we recommend having the system checked by an authorized Kia dealer.

Transmission ranges

The indicator in the instrument cluster displays the shift lever position when the ignition switch is in the ON position.

P (Park)

Always come to a complete stop before shifting into P (Park).

To shift from P (Park), you must depress firmly on the brake pedal and make sure your foot is off the accelerator pedal.

If you have done all of the above and still cannot shift the lever out of P (Park), see “Shift-Lock Release” in this chapter.

The shift lever must be in P (Park) before turning the engine off.

⚠ WARNING

- **Shifting into P (Park) while the vehicle is in motion may cause you to lose control of the vehicle.**
- **After the vehicle has stopped, always make sure the shift lever is in P (Park), apply the parking brake, and turn the engine off.**
- **When parking on an incline, chock the wheels to prevent the vehicle from rolling down.**
- **For safety, always engage the parking brake with the shift lever in the P (Park) position except for the case of emergency parking.**
- **Do not use the P (Park) position in place of the parking brake.**

R (Reverse)

Use this position to drive the vehicle backward.

⚠ CAUTION

Always come to a complete stop before shifting into or out of R (Reverse); you may damage the transmission if you shift into R (Reverse) while the vehicle is in motion.

N (Neutral)

The wheels and transmission are not engaged.

Use N (Neutral) if you need to restart a stalled engine, or if it is necessary to stop with the engine ON. Shift into P (Park) if you need to leave your vehicle for any reason.

Always depress the brake pedal when you are shifting from N (Neutral) to another gear.

⚠ WARNING

Do not shift into gear unless your foot is firmly on the brake pedal. Shifting into gear when the engine is running at high speed can cause the vehicle to move very rapidly. You may lose control of the vehicle and cause accidents.

⚠ WARNING

Do not drive with the shift lever in N (Neutral).

The engine brake may not work, which may lead to an accident.

- Parking in N (Neutral) gear

Follow the steps below when parking and you want the vehicle to move when pushed.

1. After parking your vehicle, step on the brake pedal and move the shift lever to [P] with the engine start/stop button in [ON] or while the engine is running.
2. If the parking brake is applied, unlock the parking brake.
   - For EPB (Electronic Parking Brake) equipped vehicles, push the brake pedal with the engine start/stop button in [ON] or while the engine is running to disengage the parking brake. If [AUTO HOLD] function is used while driving (If [AUTO HOLD] indicator is on in the cluster), press [AUTO HOLD] switch and [AUTO HOLD] function should turn off.
3. While pressing the brake pedal, turn the engine start/stop button [OFF].
   - For smart key equipped vehicles, the ignition switch can be moved to [OFF] only when the shift lever is in [P].
4. Change the gear shift lever to [N] (Neutral) while pressing the brake pedal and pushing [SHIFT LOCK RELEASE] button or inserting, pressing down a tool (e.g. flathead screw-driver) into the [SHIFT LOCK RELEASE] access hole at the same time. Then, the vehicle will move when external force is applied.

⚠ CAUTION

- ***With the exception of parking in neutral gear, always park the vehicle in [P] (Park) for safety and engage the parking brake.***
- ***Before parking in [N] (Neutral) gear, first make sure the parking ground is level and flat. Do not park in [N] gear on any slopes or gradients.***

  If parked and left in [N], the vehicle may move and cause serious damage and injury.
- ***After the ignition switch has been turned off, the electronic parking brake cannot be disengaged.***
- ***For EPB (Electronic Parking Brake) equipped vehicles with [AUTO HOLD] function used while driving, if the engine start/stop button has been turned [OFF], the electronic parking brake will be engaged automatically. Therefore, [AUTO HOLD] function should be turned off before the engine start/stop button is turned off.***

D (Drive)

This is the normal driving position. The transmission will automatically shift through a seven-gear sequence, providing the best fuel economy and power.

For extra power when passing another vehicle or driving uphill, depress the accelerator pedal further until you feel the transmission downshift to a lower gear.

⚠ WARNING

Always fully depress the brake pedal before and while shifting out of the P (Park) position into another position to avoid inadvertent motion of the vehicle, which could injure persons in or around the car.

Paddle shifter (if equipped)

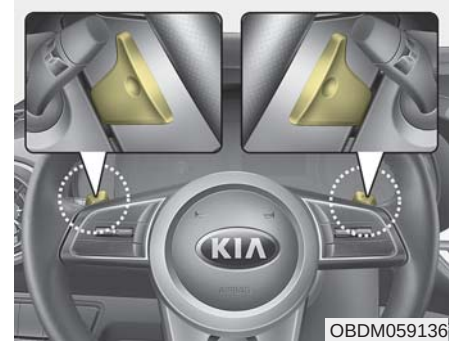

The paddle shifter is available when the shift lever is in the D (Drive) position or the manual mode.

With the shift lever in the D position

The paddle shifter will operate when the vehicle speed is more than 10 km/h (6.2 mph).

Pull the [+] or [-] paddle shifter once to shift up or down one gear and the system changes from automatic mode to manual mode.

When the vehicle speed is lower than 10 km/h (6.2 mph), if you depress the accelerator pedal for more than 5 seconds or if you move the shift lever from D (Drive) to manual Mode and move it from manual Mode to D (Drive) again, the system changes from manual mode to automatic mode.

With the shift lever in the sports mode

Pull the [+] or [-] paddle shifter once to shift up or down one gear.

✻ NOTICE

If the [+] and [-] paddle shifters are pulled at the same time, gear shift may not occur.

■ Type A

OBDM059006

■ Type B

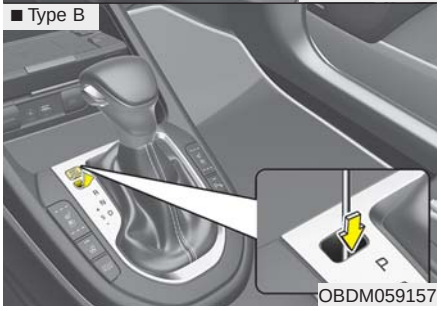

OBDM059157

Shift-lock override

If the shift lever cannot be moved from the P (Park) position into the R (Reverse) position with the brake pedal depressed, continue depressing the brake, then do the following:

1. Place the ignition switch in the LOCK/OFF position.
2. Apply the parking brake.
3. Carefully remove the cap (1) covering the shift-lock release access hole.
4. Insert a tool (e.g. flathead screwdriver) into the access hole and press down on the tool.
5. Move the shift lever.
6. Remove the tool from the shiftlock override access hole then install the cap.
7. Have the system inspected by a professional workshop. Kia recommends to visit an authorized Kia dealer/service partner.

Ignition key interlock system (if equipped)

The ignition key cannot be removed unless the shift lever is in the P (Park) position.

Good driving practices

- Never move the shift lever from P (Park) or N (Neutral) to any other position with the accelerator pedal depressed.
- Never move the shift lever into P (Park) when the vehicle is in motion.
- Be sure the car is completely stopped before you attempt to shift into R (Reverse) or D (Drive).
- Never take the car out of gear and coast down a hill. This may be extremely hazardous. Always leave the car in gear when moving.
- Do not "ride" the brakes. This can cause them to overheat and malfunction. Instead, when you are driving down a long hill, slow down and shift to a lower gear. When you do this, engine braking will help slow the car.
- Slow down before shifting to a lower gear. Otherwise, the lower gear may not be engaged.

INTELLIGENT VARIABLE TRANSMISSION (IVT) (IF EQUIPPED)

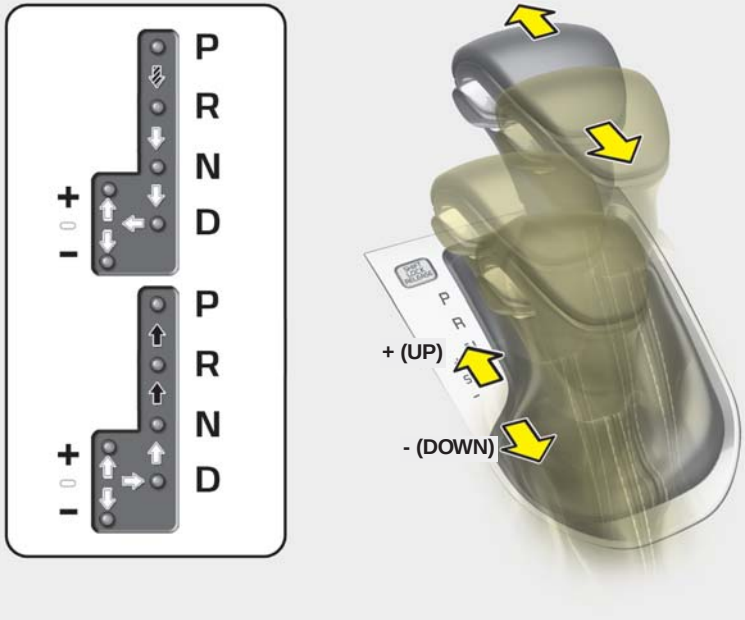

Depress the brake pedal and the lock release button when shifting.

Press the lock release button when shifting.

The shift lever can be shifted freely.

OBD058005

Intelligent Variable Transmission (IVT) operation

The Intelligent Variable Transmission (IVT) automatically shifts depending on speed and accelerator pedal position. The individual speeds are selected automatically, depending on the position of the shift lever.

For smooth operation, depress the brake pedal when shifting from N (Neutral) to a forward or reverse gear.

⚠ WARNING
- Intelligent Variable Transmission (IVT)

- **Always check the surrounding areas near your vehicle for people, especially children, before shifting a car into D (Drive) or R (Reverse).**
- **Before leaving the driver's seat, always make sure the shift lever is in the P (Park) position; then set the parking brake fully and shut the engine off. Unexpected and sudden vehicle movement can occur if these precautions are not followed in the order identified.**
- **Do not use the engine brake (shifting from a high gear to lower gear) rapidly on slippery roads.**

  The vehicle may slip, causing an accident.

⚠ CAUTION

- ***To avoid damage to your transmission, do not accelerate the engine in R (Reverse) or any forward gear position with the brakes on.***
- ***When stopped on an incline, do not hold the vehicle stationary with engine power. Use the service brake or the parking brake.***
- ***Do not shift from N (Neutral) or P (Park) into D (Drive), or R (Reverse) when the engine is above idle speed.***

Transmission ranges

The indicator in the instrument cluster displays the shift lever position when the ignition switch is in the ON position.

P (Park)

Always come to a complete stop before shifting into P (Park). This position locks the transmission and prevents the front wheels from rotating.

⚠ WARNING

- **Shifting into P (Park) while the vehicle is in motion will cause the drive wheels to lock which may cause you to lose control of the vehicle.**
- **Do not use the P (Park) position in place of the parking brake. Always make sure the shift lever is latched in the P (Park) position and set the parking brake fully.**
- **Never leave a child unattended in a vehicle.**

⚠ CAUTION

The transmission may be damaged if you shift into P (Park) while the vehicle is in motion.

R (Reverse)

Use this position to drive the vehicle backward.

⚠ CAUTION

Always come to a complete stop before shifting into or out of R (Reverse); you may damage the transmission if you shift into R while the vehicle is in motion, except as explained in "Rocking the vehicle" in this section.

N (Neutral)

The wheels and transmission are not engaged. The vehicle will roll freely even on the slightest incline unless the parking brake or service brakes are applied.

⚠ WARNING

Do not drive with the shift lever in N (Neutral).

The engine brake may not work, which may lead to an accident.

-Parking in N (Neutral) gear

Follow the steps below when parking and you want the vehicle to move when pushed.

1. After parking your vehicle, step on the brake pedal and move the shift lever to "P" with the ignition button in "ON" or while the engine is running.
2. If the parking brake is applied, unlock the parking brake.
3. While pressing the brake pedal, turn the ignition button "OFF".
   - For smart key equipped vehicles, the ignition switch can be moved to "OFF" only when the shift lever is in "P".
4. Change the gear shift lever to "N" (Neutral) while pressing the brake pedal and pushing "SHIFT LOCK RELEASE" button or inserting, a tool (e.g. flathead screw-driver) into the "SHIFT LOCK RELEASE" access hole at the same time. Then, the vehicle will move when external force is applied.

⚠ WARNING

- **With the exception of parking in neutral gear, always park the vehicle in "P" (Park) for safety and engage the parking brake.**
- **Before parking in "N" (Neutral) gear, first make sure the parking ground is level and flat. Do not park in "N" gear on any slopes or gradients.**

  If parked and left in "N" on a slope or gradient, the vehicle may move and cause serious damage and injury.

D (Drive)

This is the normal forward driving position. The transmission will automatically shift, providing the best fuel economy and power.

For extra power when passing another vehicle or climbing grades, depress the accelerator fully, at which time the transmission will automatically downshift to the next lower gear.

✻ NOTICE

Always come to a complete stop before shifting into D (Drive).

Sports mode

Whether the vehicle is stationary or in motion, sports mode is selected by pushing the shift lever from the D (Drive) position into the manual gate. To return to D (Drive) range operation, push the shift lever back into the main gate.

SPORT mode manages the driving dynamics by automatically adjusting the steering effort and the engine and transmission control logic for enhanced driver performance.

In sports mode, moving the shift lever backwards or forwards will allow you to make gearshifts rapidly. In contrast to a manual transmission, the sports mode allows gearshifts with the accelerator pedal depressed.

Up (+) : Push the lever forward once to shift up one gear.

Down (-) : Pull the lever backwards once to shift down one gear.

✻ NOTICE

- **In sports mode, the driver must execute upshifts in accordance with road conditions, being careful to keep the engine speed below the red zone.**
- **In sports mode, only the 8 forward gears can be selected. To reverse or park the vehicle, move the shift lever to the R (Reverse) or P (Park) position as required.**
- **In sports mode, downshifts are made automatically when the vehicle slows down. When the vehicle stops, 1st gear is automatically selected.**
- **In sports mode, when the engine rpm approaches the red zone, shift points are varied to upshift automatically.**
- **To maintain the required levels of vehicle performance and safety, the system may not execute certain gearshifts when the shift lever is operated.**

(Continued)

(Continued)

- **When driving on a slippery road, push the shift lever forward into the +(up) position. This causes the transmission to shift into the 2nd gear which is better for smooth driving on a slippery road. Push the shift lever to the -(down) side to shift back to the 1st gear.**
- **When SPORT mode is activated:**
  - **The engine rpm will tend to remain raised over a certain length of time even after releasing the accelerator**
  - **Upshifts are delayed when accelerating**
- **In SPORT mode, the fuel efficiency may decrease.**

Shift lock system (if equipped)

For your safety, the Intelligent Variable Transmission (IVT) has a shift lock system which prevents shifting the transmission from P (Park) into R (Reverse) unless the brake pedal is depressed.

To shift the transmission from P (Park) into R (Reverse):

1. Depress and hold the brake pedal.
2. Start the engine or turn the ignition switch to the ON position.
3. Move the shift lever.

If the brake pedal is repeatedly depressed and released with the shift lever in the P (Park) position, a chattering noise near the shift lever may be heard. This is a normal condition.

⚠ WARNING

Always fully depress the brake pedal before and while shifting out of the P (Park) position into another position to avoid inadvertent motion of the vehicle, which could injure persons in or around the vehicle.

Shift-lock override

OBDM059157

If the shift lever cannot be moved from the P (Park) position into R (Reverse) position with the brake pedal depressed, continue depressing the brake, then do the following:

1. Place the ignition switch in the LOCK/OFF position.
2. Apply the parking brake.
3. Carefully remove the cap covering the shift-lock release access hole.
4. Insert a tool (e.g. flathead screw-driver) into the access hole and press down on the tool.
5. Move the shift lever.
6. Remove the tool from the shiftlock override access hole then install the cap.
7. Have the system inspected by a professional workshop. Kia recommends to visit an authorized Kia dealer/service partner.

Ignition key interlock system (if equipped)

The ignition key cannot be removed unless the shift lever is in the P (Park) position.

⚠ WARNING

Exercise extreme caution when driving on a slippery surface. Be especially careful when braking, accelerating or shifting gears. On a slippery surface, an abrupt change in vehicle speed can cause the drive wheels to lose traction and the vehicle to lose control.

Good driving practices

- Never move the shift lever from P (Park) or N (Neutral) to any other position with the accelerator pedal depressed.
- Never move the shift lever into P (Park) when the vehicle is in motion.
- Be sure the vehicle is completely stopped before you attempt to shift into R (Reverse) or D (Drive).
- Never take the vehicle out of gear and coast down a hill. This may be extremely hazardous. Always leave the vehicle in gear when moving.
- Do not "ride" the brakes. This can cause them to overheat and malfunction. Instead, when you are driving down a long hill, slow down and shift to a lower gear. When you do this, engine braking will help slow down the vehicle.
- Slow down before shifting to a lower gear. Otherwise, the lower gear may not be engaged.

- Always use the parking brake. Do not depend on placing the transmission in P (Park) to keep the vehicle from moving.

⚠ WARNING

Exercise extreme caution when driving on a slippery surface. Be especially careful when braking, accelerating or shifting gears. On a slippery surface, an abrupt change in vehicle speed can cause the drive wheels to lose traction and the vehicle to go out of control.

- Optimum vehicle performance and economy is obtained by smoothly depressing and releasing the accelerator pedal.

⚠ WARNING

- **Always buckle-up! In a collision, an unbelted occupant is significantly more likely to be seriously injured or killed than a properly belted occupant.**
- **Avoid high speeds when cornering or turning.**
- **Do not make quick steering wheel movements, such as sharp lane changes or fast, sharp turns.**
- **The risk of a rollover is greatly increased if you lose control of your vehicle at highway speeds.**
- **Losing control often occurs if two or more wheels drop off the roadway and the driver oversteers to reenter the roadway.**
- **In the event your vehicle leaves the roadway, do not steer sharply. Instead, slow down before pulling back into the travel lanes.**
- **Never exceed posted speed limits.**

⚠ WARNING

If your vehicle becomes stuck in snow, mud, sand, etc., then you may attempt to rock the vehicle free by moving it forward and backward. Do not attempt this procedure if people or objects are anywhere near the vehicle. During the rocking operation, the vehicle may suddenly move forward or backward as it becomes unstuck, causing injury or damage to nearby people or objects.

Moving up a steep grade from a standing start

To move up a steep grade from a standing start, depress the brake pedal, release the parking break, and shift the shift lever to D (Drive). Select the appropriate gear depending on load weight and steepness of the grade, and release the parking brake. Depress the accelerator gradually while releasing the service brakes.

When accelerating from a stop on a steep hill, the vehicle may have a tendency to roll backwards. Shifting the shift lever into 2 (Second Gear) will help prevent the vehicle from rolling backwards.

BRAKE SYSTEM

Power brakes

Your vehicle has power-assisted brakes that adjust automatically through normal usage.

In the event that the power-assisted brakes lose power because of a stalled engine or some other reason, you can still stop your vehicle by applying greater force to the brake pedal than you normally would. The stopping distance, however, will be longer.

When the engine is not running, the reserve brake power is partially depleted each time the brake pedal is applied. Do not pump the brake pedal when the power assist has been interrupted.

Pump the brake pedal only when necessary to maintain steering control on slippery surfaces.

⚠ CAUTION - Brake Pedal

Do not drive with your foot resting on the brake pedal. This will create abnormally high brake temperatures which can cause excessive brake lining and pad wear.

⚠ WARNING - Steep hill braking

Avoid continuous application of the brakes when descending a long or steep hill by shifting to a lower gear. Continuous brake application will cause the brakes to overheat and could result in a temporary loss of braking performance.

Wet brakes may impair the vehicle's ability to safely slow down; the vehicle may also pull to one side when the brakes are applied. Applying the brakes lightly will indicate whether they have been affected in this way. Always test your brakes in this fashion after driving through deep water. To dry the brakes, apply them lightly while maintaining a safe forward speed until brake performance returns to normal.

In the event of brake failure

If service brakes fail to operate while the vehicle is in motion, you can make an emergency stop with the parking brake. The stopping distance, however, will be much greater than normal.

⚠ WARNING - Parking brake

Avoid applying the parking brake to stop the vehicle while it is moving, except in an emergency situation. Applying the parking brake while the vehicle is moving at normal speeds can cause a sudden loss of control of the vehicle. If you must use the parking brake to stop the vehicle, use great caution in applying the brake.

Disc brakes wear indicator

When your brake pads are worn and new pads are required, you will hear a high-pitched warning sound from your front brakes or rear brakes. You may hear this sound come and go or it may occur whenever you depress the brake pedal.

Please remember that some driving conditions or climates may cause a brake squeal when you first apply (or lightly apply) the brakes. This is normal and does not indicate a problem with your brakes.

Always replace the front or rear brake pads as pairs.

⚠ CAUTION - Replace brake pads

Do not continue to drive with worn brake pads. Continuing to drive with worn brake pads can damage the braking system and result in costly brake repairs.

⚠ WARNING - Brake wear

Do not ignore high pitched wear sounds from your brakes. If you ignore this audible warning, you will eventually lose braking performance, which could lead to a serious accident.

Rear drum brakes (if equipped)

Your rear drum brakes do not have wear indicators. Therefore, have the rear brake linings inspected if you hear a rear brake rubbing noise. Also have your rear brakes inspected each time you change or rotate your tires and when you have the front brakes replaced.

Parking brake

Applying the parking brake

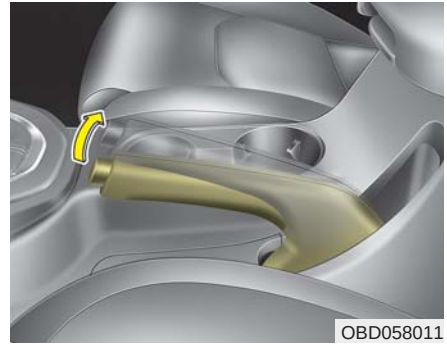
OBD058011

To engage the parking brake, first apply the foot brake and then pull up the parking brake lever as far as possible.

In addition it is recommended that when parking the vehicle on a incline, the shift lever should be in a low gear on manual transmission vehicles.

⚠ CAUTION

- ***Driving with the parking brake applied will cause excessive brake pad and brake rotor wear.***
- ***Do not operate the parking brake while the vehicle is moving, except in an emergency situation. It could damage the vehicle system and endanger driving safety.***

Releasing the parking brake

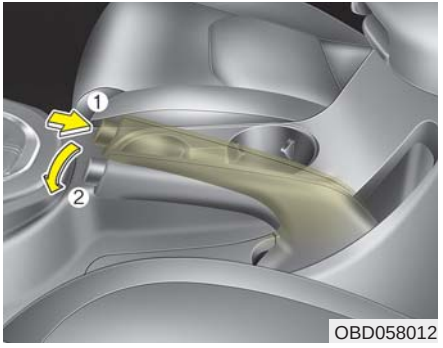

OBD058012

To release the parking brake, first apply the foot brake and pull up the parking brake lever slightly. Secondly depress the release button (1) and lower the parking brake lever (2) while holding the button.

If the parking brake does not release or does not release all the way, have the system checked by a professional workshop. Kia recommends to visit an authorized Kia dealer/service partner.

- Be cautious when parking on a hill. Firmly engage the parking brake and place the shift lever in first or reverse gear (manual transmission). If your vehicle is facing downhill, turn the front wheels into the curb to help keep the vehicle from rolling. If your vehicle is facing uphill, turn the front wheels away from the curb to help keep the vehicle from rolling. If there is no curb or if it is required by other conditions to keep the vehicle from rolling, chock the wheels.
- Under some conditions, your parking brake can freeze in the engaged position. This is most likely to happen when there is an accumulation of snow or ice around or near the rear brakes or if the brakes are wet. If there is a risk that the parking brake may freeze, apply it only temporarily while you put the shift lever in first or reverse gear (manual transmission) and chock the rear wheels so the vehicle cannot roll. Then release the parking brake.
- Do not hold the vehicle on an incline with the accelerator pedal. This can cause the transmission to overheat. Always use the brake pedal or parking brake.

⚠ WARNING

- **Never allow a passenger to touch the parking brake. If the parking brake is released unintentionally, serious injury may occur.**
- **All vehicles should always have the parking brake fully engaged when parking to avoid inadvertent movement of the vehicle, which can injure occupants or pedestrians.**

Check the brake warning light by turning the ignition switch ON (do not start the engine). This light will be illuminated when the parking brake is applied with the ignition switch in the START or ON position.

Before driving, be sure the parking brake is fully released and the brake warning light is off.

If the brake warning light remains on after the parking brake is released while engine is running, there may be a malfunction in the brake system. Immediate attention is necessary.

If at all possible, cease driving the vehicle immediately. If that is not possible, use extreme caution while operating the vehicle and only continue to drive the vehicle until you can reach a safe location or repair shop.

Anti-lock brake system (ABS)

ABS (or ESC) will not prevent accidents due to improper or dangerous driving maneuvers. Even though ABS (or ESC) helps improve vehicle control during emergency braking, always maintain a safe distance between you and objects ahead. Vehicle speeds should always be reduced during extreme road conditions. The vehicle should be driven at reduced speeds in the following circumstances:

- When driving on rough, gravel or snow-covered roads
- When driving on roads where the road surface is pitted or has different surface heights.

Driving in these conditions increases the stopping distance for your vehicle.

The ABS continuously senses the speed of the wheels. If the wheels are going to lock, the ABS system repeatedly modulates the hydraulic brake pressure to the wheels.

When you apply your brakes under conditions which may lock the wheels, you may hear a “tik-tik” sound from the brakes, or feel a corresponding sensation in the brake pedal. This is normal and means your ABS is active.

In order to obtain the maximum benefit from your ABS in an emergency situation, do not attempt to modulate your brake pressure and do not try to pump your brakes. Press your brake pedal as hard as possible to allow the ABS to control the force being delivered to the brakes.

✻ NOTICE

A click sound may be heard in the engine compartment when the vehicle begins to move after the engine is started. These conditions are normal and indicate that the anti-lock brake system is functioning properly.

- Even with the anti-lock brake system, your vehicle still requires sufficient stopping distance. Always maintain a safe distance from the vehicle in front of you.
- Always slow down when cornering. The anti-lock brake system cannot prevent accidents resulting from excessive speeds.
- On loose or uneven road surfaces, operation of the anti-lock brake system may result in a longer stopping distance than for vehicles equipped with a conventional brake system.

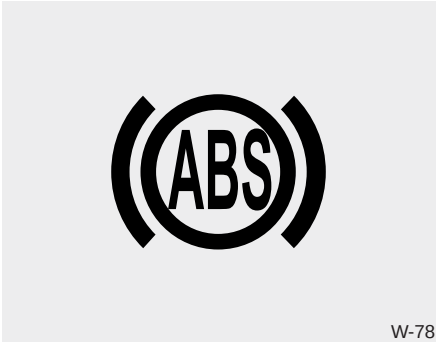

W-78

The ABS warning light will stay on for approximately 3 seconds after the ignition switch is ON. During that time, the ABS will go through self-diagnosis and the light will go off if everything is normal. If the light stays on, you may have a problem with your ABS. Contact an authorized Kia dealer as soon as possible.

- When you drive on a road having poor traction, such as an icy road, and have operated your brakes continuously, the ABS will be active continuously and the ABS warning light may illuminate. Pull your vehicle over to a safe place and stop the engine.
- Restart the engine. If the ABS warning light goes off, then your ABS system is normal. Otherwise, you may have a problem with the ABS. Contact an authorized Kia dealer as soon as possible.

✻ NOTICE

When you jump start your vehicle because of a drained battery, the engine may not run as smoothly and the ABS warning light may turn on at the same time. This happens because of low battery voltage. It does not mean your ABS has malfunctioned.

- **Do not pump your brakes!**
- **Have the battery recharged before driving the vehicle.**

Electronic stability control (ESC)

OBD058013

The Electronic Stability control (ESC) system is designed to stabilize the vehicle during cornering maneuvers. ESC checks where you are steering and where the vehicle is actually going. ESC applies the brakes on individual wheels and intervenes with the engine management system to stabilize the vehicle.

Electronic stability control (ESC) will not prevent accidents. Excessive speed in turns, abrupt maneuvers and hydroplaning on wet surfaces can still result in serious accidents. Only a safe and attentive driver can prevent accidents by avoiding maneuvers that cause the vehicle to lose traction. Even with ESC installed, always follow all the normal precautions for driving - including driving at safe speeds for the conditions.

⚠ WARNING

For maximum protection, always wear your seat belt. No system, no matter how advanced, can compensate for all driver error and/or driving conditions. Always drive responsibly.

The Electronic Stability Control (ESC) system is an electronic system designed to help the driver maintain vehicle control under adverse conditions. It is not a substitute for safe driving practices. Factors including speed, road conditions and driver steering input can all affect whether ESC will be effective in preventing a loss of control. It is still your responsibility to drive and corner at reasonable speeds and to leave a sufficient margin of safety.

When you apply your brakes under conditions which may lock the wheels, you may hear a “tik-tik” sound from the brakes, or feel a corresponding sensation in the brake pedal. This is normal and means your ESC is active.

✻ NOTICE

A click sound may be heard in the engine compartment when the vehicle begins to move after the engine is started. These conditions are normal and indicate that the Electronic Stability Control System is functioning properly.

ESC operation

ESC ON condition

-

- When the ignition is turned ON, ESC and ESC OFF indicator lights illuminate for approximately 3 seconds, then ESC is turned on.
- Press the ESC OFF button for at least half a second after turning the ignition ON to turn ESC off. (ESC OFF indicator will illuminate). To turn the ESC on, press the ESC OFF button (ESC OFF indicator light will go off).
- When starting the engine, you may hear a slight ticking sound. This is the ESC performing an automatic system self-check and does not indicate a problem.

When operating

When the ESC is in operation, the ESC indicator light blinks.

- When the Electronic Stability Control is operating properly, you can feel a slight pulsation in the vehicle. This is only the effect of brake control and indicates nothing unusual.
- When moving out of the mud or driving on a slippery road, pressing the accelerator pedal may not cause the engine rpm (revolutions per minute) to increase.

ESC operation off

ESC OFF state

There are 2 types of ESC OFF states: Traction Control disabled and Traction & Stability Control disabled.

If the ignition is turned off when ESC is off, ESC remains off. Upon restarting the engine, the ESC will automatically turn on again.

■ Type A

OJF058384L

■ Type B

OJF058385L

- **ESC off state 1 - “Traction Control disabled”**

To turn off the traction control function and only operate the brake control function of the ESC, press the ESC OFF button (ESC OFF) shortly (for less than 3 seconds and the ESC OFF indicator light (ESC OFF) will illuminate). At this state, only the brake control function will operate.

■ Type A

OJF058386L

■ Type B

OJF058387L

- **ESC off state 2- "Traction and Stability Control disabled"**

To turn off the traction control function and the brake control function of the ESC, press the ESC OFF button (ESC OFF) for more than 3 seconds. ESC OFF indicator light (ESC OFF) illuminates and ESC OFF warning chime will sound.

In this state, the car stability control function will not operate.

Indicator light

■ ESC indicator light

■ ESC OFF indicator light

When the ignition switch is turned to ON, the indicator light illuminates, then goes off if the ESC system is operating normally.

The ESC indicator light blinks whenever ESC is operating or illuminates when ESC fails to operate.

The ESC OFF indicator light comes on when the ESC is turned off with the button.

⚠ WARNING - Electronic stability control

Drive carefully even though your vehicle has Electronic Stability Control. It can only assist you in maintaining control under certain circumstances.

ESC OFF usage

When driving

- ESC should be turned on for daily driving whenever possible.
- To turn ESC off while driving, press the ESC OFF button while driving on a flat road surface.

⚠ WARNING - Operating ESC

Never press the ESC OFF button while ESC is operating (ESC indicator light blinks).

If ESC is turned off while ESC is operating, the vehicle may slip out of control.

✻ NOTICE

- **When operating the vehicle on a dynamometer, ensure that the ESC is turned off (ESC OFF light illuminated). If the ESC is left on, it may prevent the vehicle speed from increasing, and result in false diagnosis.**
- **Turning the ESC off does not affect ABS or brake system operation.**

Vehicle stability management (VSM)

This system provides further enhancements to vehicle stability and steering responses when a vehicle is driving on a slippery road or a vehicle detects changes in coefficient of friction between the right wheels and left wheels when braking.

⚠ WARNING - Tire/ Wheel size

When replacing tires and wheels, make sure they are the same size as the original tires and wheels installed. Driving with varying tire or wheel sizes may diminish any supplemental safety benefits of the VSM system.

VSM operation

When the VSM is in operation, the ESC indicator light ( ) blinks.

When the vehicle stability management is operating properly, you can feel a slight pulsation in the vehicle and/or abnormal steering responses (EPS- Electronic Power Steering). This is only the effect of brake and EPS control and indicates nothing unusual.

The VSM does not operate when:

- Driving on a sloping road such as a gradient or incline
- Driving in reverse
- ESC OFF indicator light ( ) remains on the instrument cluster
- EPS indicator light remains on the instrument cluster

VSM operation off

If you press the ESC OFF button to turn off the ESC, the VSM will also cancel and the ESC OFF indicator light ( ) illuminates.

To turn on the VSM, press the button again. The ESC OFF indicator light will turn off.

⚠ WARNING
- Vehicle stability management

Drive carefully even though your vehicle has Vehicle stability management. It can only assist you in maintaining control under certain circumstances.

Malfunction indicator

The VSM can be deactivated even if you don't cancel the VSM operation by pressing the ESC OFF button. It indicates that a malfunction has been detected somewhere in the Electric Power Steering system or VSM system. If the ESC indicator light ( ) or EPS warning light remains on, take your vehicle to an authorized Kia dealer and have the system checked.

✻ NOTICE

- **The VSM is designed to function above approximately 22 km/h (13 mph) on curves.**
- **The VSM is designed to function above approximately 10 km/h (6 mph) when a vehicle is braking on a split-mu surface. A split-mu surface is made of two surfaces which have different friction forces.**

- The Vehicle Stability Management system is not a substitute for safe driving practices but a supplemental function only. It is the responsibility of the driver to always check the speed and the distance to the vehicle ahead. Always hold the steering wheel firmly while driving.
- Your vehicle is designed to activate according to the driver's intention, even with installed VSM. Always follow all the normal precautions for driving at safe speeds for the conditions – including driving in inclement weather and on a slippery road.

⚠ WARNING

For maximum protection, always wear your seat belt. No system, no matter how advanced, can compensate for all driver error and/or driving conditions. Always drive responsibly.

Hill-start assist control (HAC)

A vehicle has the tendency to roll back on a steep hill when it starts to go after stopping. The Hill-start Assist Control (HAC) prevents the vehicle from rolling back by applying the brakes automatically for about 2 seconds. The brakes are released when the accelerator pedal is depressed or after about 2 seconds.

The HAC is activated only for about 2 seconds, so when the vehicle begins to roll, always depress the accelerator pedal.

⚠ WARNING - Maintaining Brake Pressure on Incline

HAC does not replace the need to apply brakes while stopped on an incline. While stopped, make sure you maintain brake pressure sufficient to prevent your vehicle from rolling backward and causing an accident. Don't release the brake pedal until you are ready to accelerate forward.

Good braking practices

- Check to be sure the parking brake is not engaged and the parking brake indicator light is out before driving away.
- Driving through water may get the brakes wet. They can also get wet when the vehicle is washed. Wet brakes can be dangerous! Your vehicle will not stop as quickly if the brakes are wet. Wet brakes may cause the vehicle to pull to one side.

  To dry the brakes, apply the brakes lightly until the braking action returns to normal, taking care to keep the vehicle under control at all times. If the braking action does not return to normal, stop as soon as it is safe to do so and call an authorized Kia dealer for assistance.
- Don't coast down hills with the vehicle out of gear. This is extremely hazardous. Keep the vehicle in gear at all times, use the brakes to slow down, then shift to a lower gear so that engine braking will help you maintain a safe speed.
- Don't "ride" the brake pedal. Resting your foot on the brake pedal while driving can be dangerous because the brakes might overheat and lose their effectiveness. It also increases the wear of the brake components.
- If a tire goes flat while you are driving, apply the brakes gently and keep the vehicle pointed straight ahead while you slow down. When you are moving slowly enough for it to be safe to do so, pull off the road and stop in a safe place.
- If your vehicle is equipped with an Intelligent Variable Transmission / Dual clutch transmission, don't let your vehicle creep forward. To avoid creeping forward, keep your foot firmly on the brake pedal when the vehicle is stopped.
- Be cautious when parking on a hill. Firmly engage the parking brake and place the shift lever in P (intelligent variable transmission). If your vehicle is facing downhill, turn the front wheels into the curb to help keep the vehicle from rolling.

If your vehicle is facing uphill, turn the front wheels away from the curb to help keep the vehicle from rolling. If there is no curb or if it is required by other conditions to keep the vehicle from rolling, chock the wheels.

- Under some conditions, your parking brake can freeze in the engaged position. This is most likely to happen when there is an accumulation of snow or ice around or near the rear brakes or if the brakes are wet. If there is a risk that the parking brake may freeze, apply it only temporarily while you put the shift lever in P (intelligent variable transmission) and chock the rear wheels so the vehicle cannot roll. Then release the parking brake.
- Do not hold the vehicle on an incline with the accelerator pedal. This can cause the transmission to overheat. Always use the brake pedal or parking brake.

FORWARD COLLISION-AVOIDANCE ASSIST (FCA) (CAMERA TYPE) (IF EQUIPPED)

The FCA system is designed to detect and monitor a vehicle ahead in the roadway through camera recognition to warn the driver that a collision is imminent, and if necessary, apply emergency braking.

⚠ WARNING

The camera type FCA system does not operate for pedestrians in front.

⚠ WARNING

Take the following precautions when using the Forward Collision-Avoidance Assist (FCA) system:

- **This system is only a supplemental system and is not intended to, nor does it, replace the need for extreme care and attention of the driver. The sensing range and objects detectable by the sensors are limited. Pay attention to the road conditions at all times.**
- **NEVER drive too fast for the road conditions or while cornering.**
- **Always drive cautiously to prevent unexpected and sudden situations from occurring. FCA does not guarantee to stop the vehicle completely and does not guarantee to avoid all collisions.**

System setting and activation

System setting

When the ignition switch is turned on, Forward Collision-Avoidance Assist (FCA) automatically gets activated. The system can be deactivated if the driver cancels the system from the instrument panel as follows : 'User settings → Driving assist → Forward Collision-Avoidance Assist'

The warning light illuminates on the LCD display, when you cancel the FCA system. The driver can monitor the FCA ON/OFF status on the LCD display. Also, the warning light illuminates when the ESC (Electronic Stability Control) is turned off. When the warning light remains ON with the FCA activated, have the system checked by an authorized Kia dealer.

The driver can select the initial warning activation time in the User Settings in the instrument cluster LCD display. The options for the initial Forward Collision Warning include the following:

- EARLY - When this condition is selected, the initial Forward Collision Warning is activated earlier than normal. This setting maximizes the amount of distance between the vehicle ahead before the initial warning occurs. If the 'EARLY' condition feels too sensitive, change it, into 'NORMAL'. When the vehicle ahead suddenly stops, the warning may seem to activate later even if the 'EARLY' condition was selected.
- NORMAL - When this condition is selected, the initial Forward Collision Warning is activated normally. Compared to EARLY mode, this setting allows for a smaller amount of distance between the vehicle ahead before the initial warning occurs.
- LATE - When this condition is selected, the initial Forward Collision Warning is activated later than normal. This setting reduces the amount of distance between the vehicle ahead before the initial warning occurs. Select this condition only when traffic is light, and you are driving slowly.

Prerequisite for activation

The FCA gets ready to be activated when the FCA is selected on the LCD display, and when the following prerequisites are satisfied.

- The ESC is ON.
- The driving speed is over 10 km/h (6 mph). (However, FCA is activated within certain driving speed.)
- When recognizing a vehicle in front. (However, FCA deactivates according to conditions in front and vehicle systems, but it notices only certain warnings.)
- The FCA automatically deactivates upon canceling the ESC. When the ESC is cancelled, the FCA cannot be activated on the LCD display. In this situation, the FCA warning light will illuminate.

⚠ WARNING

- **The FCA automatically activates upon placing the ignition switch to the ON position. The driver can deactivate the FCA by canceling the system setting on the LCD display.**
- **The FCA automatically deactivates upon canceling the ESC. When the ESC is cancelled, the FCA cannot be activated on the LCD display.**

  The FCA warning light will illuminate, but it does not indicate a malfunction of the system.
- **Set or cancel FCA with the control switches on the steering wheel after stopping the vehicle in a safe place.**

FCA warning message and system control

The FCA system produces warning messages, warning alarms, and emergency braking based on the risk of a frontal collision, such as when a vehicle ahead suddenly brakes.

The driver can select the initial warning activation time in the User Settings in the LCD display. The options for the initial Forward Collision-Avoidance Assist include Early, Normal or Late initial warning time.

Collision Warning! (1st warning)

OBDM058065N

This warning message appears on the LCD display with a warning chime.

Additionally, the engine management system intervenes to help decelerate the vehicle.

- Your vehicle speed may decelerate moderately.
- The FCA system limitedly controls the brakes to preemptively mitigate impact from a collision.

Emergency braking! (2nd warning)

OBDM058066N

This warning message appears on the LCD display with a warning chime.

Additionally, the engine management system intervenes to help decelerate the vehicle.

- The FCA system limitedly controls the brakes to preemptively mitigate impact from a collision. The brake control is maximized just before a collision.

Brake operation

- In an emergency situation, the braking system enters in ready status for prompt reaction upon the driver depressing the brake pedal.
- The FCA system provides additional braking power for optimum braking performance when the driver depresses the brake pedal.
- The braking control is automatically deactivated when the driver sharply depresses the accelerator pedal or when the driver abruptly operates the steering wheel.
- The braking control is automatically cancelled when risk factors disappear.

⚠ CAUTION

The driver should always exercise great caution during vehicle operation, even though there is no warning message or warning alarm.

⚠ WARNING

The FCA system is a supplemental system and cannot completely stop the vehicle in all situations and avoid all collisions. It is the responsibility of the driver to drive safely and control the vehicle.

⚠ WARNING

The FCA system assesses the risk of a collision by monitoring several variables, such as the distance to the vehicle ahead, the speed of the vehicle ahead, and the driver's operation of the vehicle.

Certain conditions such as inclement weather, road conditions, and systems limitations may affect the operation of the FCA system.

⚠ WARNING

Never deliberately drive dangerously to activate the system as such conduct increases the risk of an accident.

FCA front view camera sensor

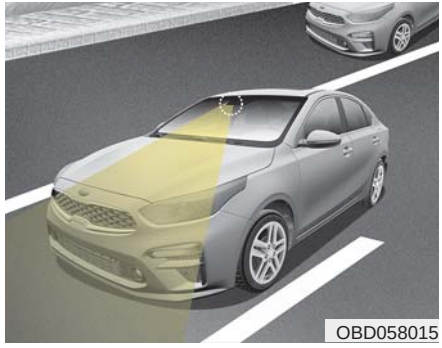

The sensor is designed to maintain a certain distance from the front end of the vehicle.

However, a sensor covered or dirty with foreign substances, such as dirt or snow, adversely affects the sensing performance. It may even temporarily cancel the FCA. Always keep the sensor and its external parts clean.

Warning message and warning light

OBDM058129N

When the sensor is covered or the sensor lens is dirty with foreign substances, such as snow or rain, the FCA system may not be able to detect vehicles. In this situation, a warning message ("Forward Collision-Avoidance Assist (FCA) system disabled. Camera blocked") will appear to notify the driver. Remove the foreign substances to allow the FCA system to function property.

This is not a malfunction with the FCA. To operate the FCA again, remove the foreign substances.

The FCA may not properly operate in an area (e.g. open terrain), where vehicles or objects are not detected after turning ON the engine.

✻ NOTICE

- **Always keep the sensor clean and free of dirt and debris.**
- **Be careful not to apply unnecessary force on the sensor. If the sensor is forcibly moved out of proper alignment, the FCA system may not operate correctly. In this situation, a warning message may not be displayed. In this situation, have the vehicle inspected by an authorized Kia dealer.**
- **Use only genuine parts to repair or replace a damaged**
- **Do not tint the window or install stickers, accessories around the inside mirror where the camera is installed.**
- **Make sure the frontal camera installation point does not get wet.**
- **Do not impact or remove any camera components.**

(Continued)

(Continued)

- **Do not place reflective objects(white paper or mirror etc.) on the dashboard.**
  The system may unnecessarily activate or deactivate due to reflection of the sunlight.
- **Excessive audio system volume may prevent occupants from hearing the FCA system warning alarm.**

System malfunction

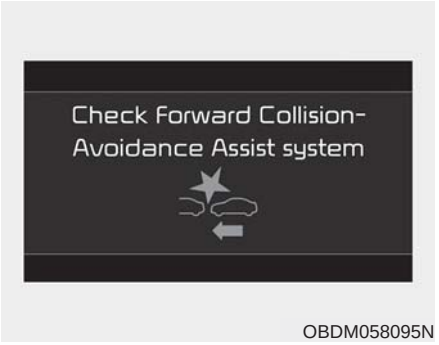

OBDM058095N

- When the FCA is not working properly, the FCA warning light ( ) will illuminate and the warning message will appear for a few seconds. After the message disappears, the master warning light ( ) will illuminate. In this situation, have the vehicle inspected by an authorized Kia dealer.
- The FCA system will get deactivated for the sake of driver's safety when the ESC warning light comes on. The FCA warning message will appear at the same time, too. But that doesn't necessarily mean the malfunction of the FCA system. Both the FCA warning light and warning message will disappear once the ESC warning light issue is resolved.

⚠ WARNING

- **The FCA is only a supplemental system for the driver's convenience. It is the driver's responsibility to control the vehicle. Do not solely depend on the FCA system. Rather, maintain a safe braking distance, and, if necessary, depress the brake pedal to lower the driving speed.**
- **The FCA may unnecessarily produce the warning message and the warning alarms. Also, due to sensing limitations, the FCA may not produce alarms in certain situations. Read the section "Limitation of the system" for more information.**

(Continued)

(Continued)

- **When there is a malfunction with the FCA, the FCA braking control does not operate upon detecting a collision risk even with other braking systems operating normally.**
- **The FCA system only recognizes vehicles in front of it while driving forward. It does not identify any animals or vehicles in the opposite direction.**
- **The FCA cannot recognize cross-traffic or parked vehicles presenting a side profile.**
- **If the vehicle in front stops suddenly, you may have less time to apply the brakes system. Therefore, always keep a safe distance between your vehicle and the vehicle in front of you.**

(Continued)

(Continued)

- **The FCA system may activate during braking and the vehicle may stop suddenly. If this occurs, any load in the vehicle may endanger passengers. Therefore, always be mindful of the load volume in the vehicle.**
- **The FCA system may not activate if the driver applies the brake pedal to avoid the risk of a collision.**
- **The FCA system does not operate when the vehicle is in reverse. In these cases, you must maintain a safe braking distance, and if necessary, depress the brake pedal to reduce the driving speed in order to maintain a safe dis tance.**

(Continued)

(Continued)

- **The regular braking function will operate normally even if there is a problem with the FCA brake control system or other functions. In this case, the braking control will not operate in the risk of a collision.**
- **The FCA system may not activate in certain situations and according to driving condition, traffic on the road, weather, road conditions, etc.**
- **The FCA system may not activate in response to all types of vehicles.**

Limitation of the system

The FCA system is designed to monitor the vehicle ahead through camera recognition to warn the driver that a collision is imminent, and if necessary, apply emergency braking. In certain situations, the camera may not be able to detect the vehicle ahead. In these cases, the FCA system may not operate. The driver must pay careful attention in the following situations where the FCA operation may be limited:

Recognizing vehicles

- The camera is contaminated with foreign substances.
- It heavily rains or snows.
- There is electromagnetic interference
- The vehicle in front has a narrow body. (i.e. motorcycles and bicycles)
- The driver's view is not clear due to backlight, reflected light, or darkness.
- The camera cannot contain the full image of the vehicle in front.
- The vehicle in front is a special vehicle, such as a heavily-loaded truck or a trailer.
- The outside brightness is greatly changed, such as entering/exiting a tunnel.
- The vehicle driving is unstable.
- The camera sensor recognition is limited.
- The driver's field of view is not well illuminated (either too dark, too much reflection, or too much backlight that obscures the field of view)

- The vehicle in front is driving erratically
- Backlight is reflected in the direction of the vehicle (including front light from the vehicle ahead)
- Moisture on the windscreen is not completely removed or frozen.
- The weather is misty.
- The vehicle in front does not turn ON the rear lights, does not have rear lights, has asymmetric rear lights, or has rear lights out of angle.
- The vehicle is on unpaved or uneven rough surfaces, or roads with sudden gradient changes
- The vehicle is moving under ground level or inside a building
- If a sudden change in the sensor recognition takes place whilst passing through a speed bump
- When the vehicle is severely shaken
- When driving around a circular intersection with a vehicle or object in front
- If the front of the camera lens is contaminated by front glass tinting, film, water repellent coating, damage on glass, or foreign matter (sticker, insect, etc.)
- The camera or camera lens is damaged.
- If the headlights of the vehicle are not used at night or in a tunnel section, or the light is too weak
- If street light or the light of the vehicle coming from the opposite direction is reflected or when sunlight is reflected by water on the road service
- When the back light is projected in the direction of the vehicle's motion (including the headlights of vehicles)
- Road sign, shadow on the road, tunnel entrances, toll gates, partial pavement
- If the windshield has moisture on its surface or if the windshield freezes,
- Driving in the fog.
- When objects are out of the sensing range of the camera

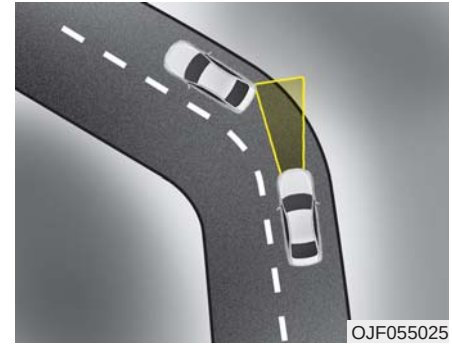

- Driving on a curve

The FCA performance may be limited while driving on a curve. The FCA may not recognize the vehicle in front even if in the same lane. It may produce the warning message and the warning alarm prematurely, or it may not produce the warning message or the warning alarm at all. When driving on a curve, exercise caution, maintain a safe braking distance, and if necessary, depress the brake pedal to reduce your driving speed in order to maintain a safe distance.

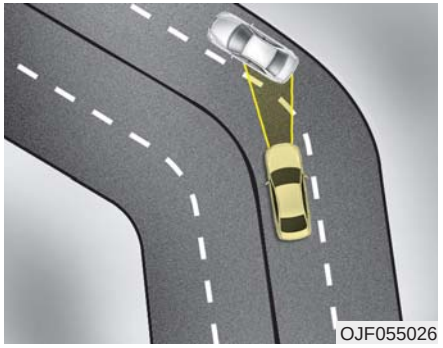

The FCA system may recognize a vehicle in an adjacent lane when driving on a curved road. In this situation, the system may apply the brake. Always pay attention to road and driving conditions while driving. If necessary, depress the brake pedal to reduce your driving speed in order to maintain a safe distance. Also, when necessary, you may depress the accelerator pedal to prevent the system from unnecessarily decelerating your vehicle. Always check the traffic conditions around the vehicle.

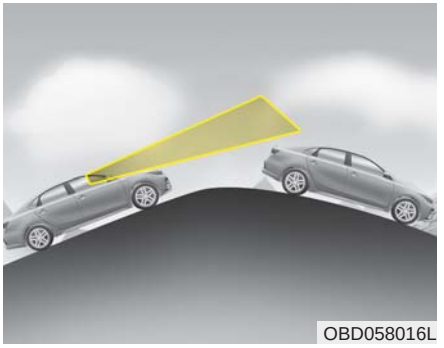

- Driving on a slope

The FCA performance may be limited while driving upward or downward on a slope, and may not recognize a vehicle in front in the same lane. It may produce the warning message and the warning alarm prematurely, or it may not produce the warning message and the warning alarm at all.

When the FCA suddenly recognizes the vehicle in front while passing over a slope, you may experience sharp deceleration.

Always keep your eyes forward while driving upward or downward on a slope, and, if necessary, depress the brake pedal.

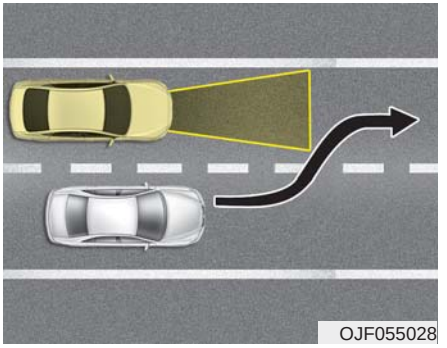

- Changing lanes

When a vehicle changes lanes in front of you, the FCA system may not immediately detect the vehicle, especially if the vehicle changes lanes abruptly. In this situation, you must maintain a safe braking distance, and if necessary, depress the brake pedal to reduce your driving speed in order to maintain a safe distance.

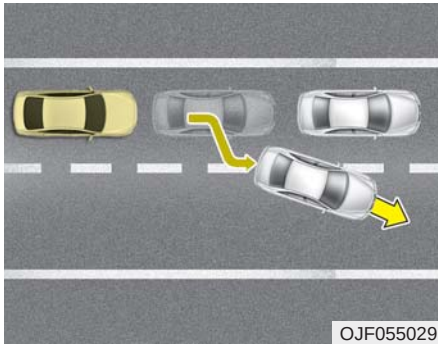
OJF055029

When driving in stop-and-go traffic, and a stopped vehicle in front of you merges out of the lane, the FCA system may not immediately detect the new vehicle that is now in front of you. In this situation, you must maintain a safe braking distance, and if necessary, depress the brake pedal to reduce your driving speed in order to maintain a safe distance.

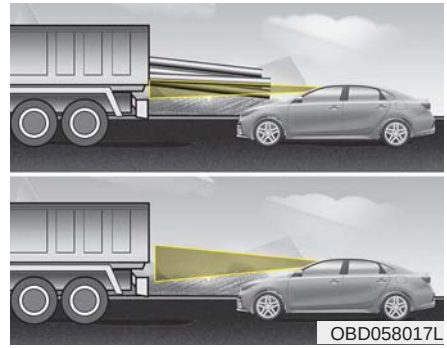
OBD058017L

- Recognizing the vehicle

If the vehicle in front of you has cargo that extends rearward from the cab, or when the vehicle in front of you has higher ground clearance, additional special attention is required. The FCA system may not be able to recognize the cargo extending from the vehicle. In these instances, you must maintain a safe braking distance from the rearmost object, and if necessary, depress the brake pedal to reduce your driving speed in order to maintain a safe distance.

⚠ WARNING

- **Do not use the FCA system when towing a vehicle. Cancel the FCA in the User Settings on the LCD display before towing. Brake application by the FCA system while towing may adversely affect your safety.**
- **Use extreme caution when the vehicle in front of you has cargo that extends rearward from the cab, or when the vehicle in front of you has higher ground clearance.**
- **The FCA system is designed to detect and monitor the vehicle ahead through camera recognition. It is not designed to detect pedestrians, bicycles, motorcycles, or smaller wheeled objects such as luggage bags, shopping carts, or strollers.**

(Continued)

(Continued)

- **The FCA system may not operate in certain situations. Therefore, never test the operation of the FCA system using a person or object, as doing so may cause severe injury or even death.**
- **When replacing or reinstalling the windscreen, or camera after removal, have the vehicle inspected by an authorized Kia dealer.**

✻ NOTICE

In some instances, the FCA system may be canceled when subjected to electromagnetic interference.

FORWARD COLLISION-AVOIDANCE ASSIST (FCA) (CAMERA + RADAR TYPE) (IF EQUIPPED)

The FCA system is designed to detect and monitor the vehicle ahead or detect a pedestrian in the roadway through radar signals and camera recognition to warn the driver that a collision is imminent, and if necessary, apply emergency braking.

⚠ WARNING

Take the following precautions when using the Forward Collision-Avoidance Assist (FCA) system:

- **This system is only a supplemental system, and it is not intended to, nor does it, replace the need for the driver's extreme care and attention. The sensing range and objects detectable by the sensors are limited. Pay attention to road conditions at all times.**
- **NEVER drive too fast for the road conditions or whilst cornering.**
- **Always drive cautiously to help prevent unexpected and sudden situations from occurring. FCA does not guarantee to stop the vehicle completely and does not guarantee to avoid all collisions.**

System setting and activation

System setting

When the ignition switch is turned on, Forward Collision-Avoidance Assist (FCA) automatically gets activated. The system can be deactivated if the driver cancels the system from the instrument panel as follows : 'User settings → Driving assist → Forward Collision-Avoidance Assist'

The warning light illuminates on the LCD display when you cancel the FCA system. The driver can monitor the FCA ON/OFF status on the LCD display. Also, the warning light illuminates when the ESC (Electronic Stability Control) is turned off. When the warning light remains ON with the FCA activated, have the system checked by a professional workshop. Kia recommends to visit an authorized Kia dealer/service partner.

The driver can select the initial warning activation time in the User Settings in the instrument cluster LCD display. The options for the initial Forward Collision Warning include the following:

- EARLY - When this option is selected, the initial Forward Collision Warning is activated earlier than normal. This setting maximizes the amount of distance between your vehicle and the vehicle or pedestrian ahead before the initial warning occurs. If the 'EARLY' option feels too sensitive, change it to 'NORMAL'. When the vehicle ahead suddenly stops, the warning may seem to activate later even if the 'EARLY' condition was selected.
- NORMAL - When this option is selected, the initial Forward Collision Warning is activated normally. Compared to EARLY mode, this setting allows for a shorter amount of distance between your vehicle and the vehicle or pedestrian ahead before the initial warning occurs.
- LATE - When this option is selected, the initial Forward Collision Warning is activated later than normal. This setting reduces the amount of distance between your vehicle and the vehicle or pedestrian ahead before the initial warning occurs. Select this option only when traffic is light and you are driving slowly.

Prerequisite for activation

The FCA gets ready to be activated when the FCA is selected on the LCD display and when the following prerequisites are satisfied.

- The ESC is ON.
- The driving speed is over 10 km/h (6 mph). (However, FCA is activated within a certain driving speed.)
- When recognizing a vehicle or the pedestrian in front. (However, FCA deactivates according to conditions in front and vehicle systems, but it notices only certain warnings.)
- The FCA automatically deactivates upon canceling the ESC. When the ESC is cancelled, the FCA cannot be activated on the LCD display. In this situation, the FCA warning light will illuminate.

⚠ WARNING

- **The FCA automatically activates upon placing the ignition switch to the ON position. The driver can deactivate the FCA by canceling the system setting on the LCD display.**
- **The FCA automatically deactivates upon canceling the ESC. When the ESC is cancelled, the FCA cannot be activated on the LCD display.**

  The FCA warning light will illuminate, but it does not indicate a malfunction of the system.
- **Set or cancel FCA with control switches on the steering wheel after stopping the vehicle in a safe place.**

FCA warning message and system control

The FCA system produces warning messages, warning alarms, and emergency braking based on the risk of a frontal collision, such as when a vehicle ahead suddenly brakes.

The driver can select the initial warning activation time in the User Settings in the LCD display. The options for the initial Forward Collision-Avoidance Assist include Early, Normal or Late initial warning time.

Collision Warning! (1st warning)

OBDM058065N

This warning message appears on the LCD display with a warning chime.

Additionally, the engine management system intervenes to help decelerate the vehicle.

- Your vehicle speed may decelerate moderately.
- The FCA system limitedly controls the brakes to preemptively mitigate impact from a collision.

Emergency braking! (2nd warning)

OBDM058066N

This warning message appears on the LCD display with a warning chime.

Additionally, the engine management system intervenes to help decelerate the vehicle.

- The FCA system limitedly controls the brakes to preemptively mitigate impact from a collision. The brake control is maximized just before a collision.

Brake operation

- In an emergency situation, the braking system enters in ready status for prompt reaction upon the driver depressing the brake pedal.
- The FCA system provides additional braking power for optimum braking performance when the driver depresses the brake pedal.
- The braking control is automatically deactivated when the driver sharply depresses the accelerator pedal or when the driver abruptly operates the steering wheel.
- The braking control is automatically cancelled when risk factors disappear.

⚠ CAUTION

The driver should always exercise great caution during vehicle operation even though there is no warning message or warning alarm.

⚠ WARNING

The FCA system is a supplemental system and cannot completely stop the vehicle in all situations and avoid all collisions. It is the responsibility of the driver to drive safely and control the vehicle.

⚠ WARNING

The FCA system assesses the risk of a collision by monitoring several variables, such as the distance to the vehicle ahead, the speed of the vehicle ahead, and the driver's operation of the vehicle.

Certain conditions such as inclement weather and road conditions may affect the operation of the FCA system.

⚠ WARNING

Never deliberately drive dangerously to activate the system as such conduct increases the risk of an accident.

Sensor to detect the distance from the vehicle in front (front radar/camera)

OBD058014

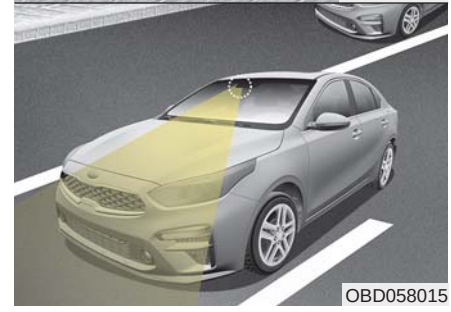

OBD058015

By detecting the vehicle or pedestrian ahead of the vehicle, the sensor helps to operate the Forward Collision-Avoidance Assist when the vehicle is at risk of a collision.

In order for the FCA system to operate properly, always make sure the sensor or sensor cover is clean and free of dirt, snow, and debris. Dirt, snow, or foreign substances on the lens may adversely affect the sensing performance of the sensor.

Warning message and warning light

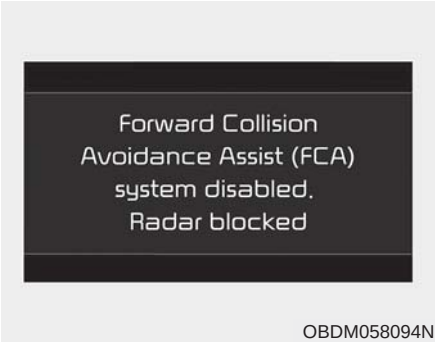

OBDM058094N

When the sensor is covered or the sensor lens is dirty with foreign substances, such as snow or rain, the FCA system may not be able to detect vehicles. In this situation, a warning message (“Forward Collision-Avoidance Assist (FCA) system disabled. Radar blocked”) will appear to notify the driver. Remove the foreign substances to allow the FCA system to function property.

This is not a malfunction with the FCA. To operate the FCA again, remove the foreign substances.

The FCA may not properly operate in an area (e.g. open terrain), where vehicles or objects are not detected after turning ON the engine.

✻ NOTICE

- **Do not install any accessories, such as license plate molding or sticker, on the sensor area. Nor arbitrarily replace the bumper. Those may adversely affect the sensing performance.**
- **Always keep the sensor/bumper area clean.**
- **Use only soft materials to wash the vehicle. Also, do not spray highly-pressurized water on the sensor installed on the bumper.**
- **Be careful not to apply unnecessary force on the frontal sensor area. When the sensor moves out of the correct position due to external force, the system may not operate normally and may not provide a warning light or message. In this situation, have the vehicle inspected by an authorized Kia dealer.**
- **Use only a genuine Kia sensor cover, and do not apply any paint on the sensor cover.**

(Continued)

(Continued)

- **Do not tint the window or install stickers, or accessories around the inside mirror where the camera is installed.**
- **Make sure the frontal camera installation point does not get wet.**
- **Do not impact, apply excessive force to, or remove any radar/camera components.**
- **Do not place reflective objects(white paper or mirrors etc.) on the dashboard.**
  The system may unnecessarily activate or deactivate due to the reflection of sunlight.
- **Excessive audio system volume may prevent occupants from hearing the FCA system warning alarm.**

System malfunction

OBDM058095N

- When the FCA is not working properly, the FCA warning light (⚠) will illuminate and the warning message will appear for a few seconds. After the message disappears, the master warning light (⚠) will illuminate. In this situation, have the vehicle inspected by an authorized Kia dealer.

- The FCA system will get deactivated for the sake of driver's safety when the ESC warning light comes on. The FCA warning message will appear at the same time, too. But that doesn't necessarily mean a malfunction of the FCA system. Both the FCA warning light and warning message will disappear once the ESC warning light issue is resolved.

⚠ WARNING

- **The FCA is only a supplemental system for the driver's convenience. It is the driver's responsibility to control the vehicle. Do not solely depend on the FCA system. Rather, maintain a safe braking distance, and, if necessary, depress the brake pedal to lower the driving speed.**
- **The FCA may unnecessarily produce the warning message and the warning alarms. Also, due to sensing limitations the FCA may not produce alarms in certain situations. Read the section "Limitation of the system" for more information.**
- **When there is a malfunction with the FCA, the FCA braking control does not operate upon detecting a collision risk, even with other braking systems operating normally.**

(Continued)

(Continued)

- **The FCA system only recognizes vehicles and pedestrians in front of it while driving forward. It does not identify any animals or vehicles in the opposite direction.**
- **The FCA does not recognize cross-traffic or parked vehicles presenting a side profile.**
- **If the vehicle in front stops suddenly, you may have less to apply the brakes system. Therefore, always keep a safe distance between your vehicle and the vehicle in front of you.**
- **The FCA system may activate during braking and the vehicle may stop suddenly. If this occurs, any load in the vehicle may endanger passengers. Therefore, always be mindful of the load volume in the vehicle.**

(Continued)

(Continued)

- **The FCA system may not activate if the driver applies the brake pedal to avoid the risk of a collision.**
- **The FCA system does not operate when the vehicle is in reverse. In these cases, you must maintain a safe braking distance, and if necessary, depress the brake pedal to reduce the driving speed in order to maintain a safe dis tance.**
- **The regular braking function will operate normally even if there is a problem with the FCA brake control system or other functions. In this case, the braking control will not operate in the risk of a collision.**

(Continued)

(Continued)

- **The FCA system may not activate in certain situations and according to driving condition, traffic on the road, weather, road conditions, etc.**
- **The FCA system may not activate in response to all types of vehicles.**

Limitation of the system

The FCA system is designed to monitor the vehicle ahead through radar signals and camera recognition to warn the driver that a collision is imminent, and if necessary, apply emergency braking. In certain situations, the radar sensor or the camera may not be able to detect the vehicle ahead. In these cases, the FCA system may not operate. The driver must pay careful attention in the following situations where the FCA operation may be limited:

Recognizing vehicles

- The radar or the camera is contaminated with foreign substances.
- It heavily rains or snows.
- There is electromagnetic interference
- Something in the path of travel deflects the radar waves
- The vehicle in front has a narrow body. (i.e. motorcycles and bicycles)
- The driver's view is not clear due to backlight, reflected light, or darkness.
- The camera cannot contain the full image of the vehicle in front.
- The vehicle in front is a special vehicle, such as a heavily-loaded truck or a trailer.
- The outside brightness is greatly changed, such as entering/exiting a tunnel.
- The vehicle driving is unstable.
- The radar/camera sensor recognition is limited.
- The driver's field of view is not well illuminated (either too dark, too much reflection, or too much backlight that obscures the field of view)
- There is severe irregular reflection from the radar sensor
- The vehicle in front is driving erratically
- The vehicle is driven near areas containing metal substances such as a construction zone, railroad, etc.
- Backlight is reflected in the direction of the vehicle (including front light from the vehicle ahead)
- Moisture on the windshield is not completely removed or is frozen.
- The weather is misty.
- The vehicle in front does not turn ON the rear lights, does not have rear lights, has asymmetric rear lights, or has rear lights out of angle.

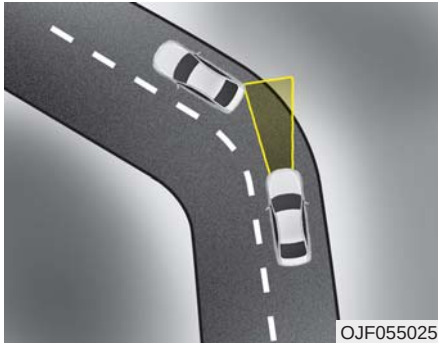

- Driving on a curve

The FCA performance may be limited while driving on a curve. The FCA may not recognize the vehicle in front even if in the same lane. It may produce the warning message and the warning alarm prematurely, or it may not produce the warning message or the warning alarm at all. When driving on a curve, exercise caution, maintain a safe braking distance, and if necessary, depress the brake pedal to reduce your driving speed in order to maintain a safe distance.

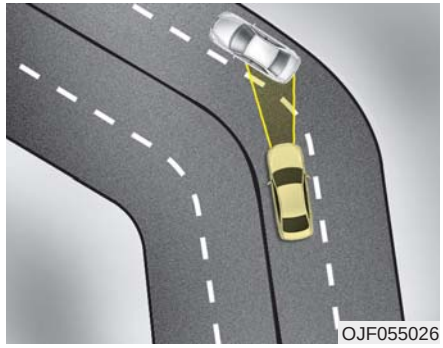

The FCA system may recognize a vehicle in an adjacent lane when driving on a curved road. In this situation, the system may apply the brake. Always pay attention to road and driving conditions while driving. If necessary, depress the brake pedal to reduce your driving speed in order to maintain a safe distance. Also, when necessary, you may depress the accelerator pedal to prevent the system from unnecessarily decelerating your vehicle. Always check the traffic conditions around the vehicle.

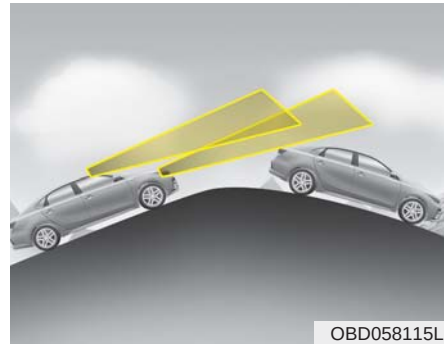

- Driving on a slope

The FCA performance may be limited while driving upward or downward on a slope, and may not recognize a vehicle in front in the same lane. It may produce the warning message and the warning alarm prematurely, or it may not produce the warning message and the warning alarm at all.

When the FCA suddenly recognizes the vehicle in front while passing over a slope, you may experience sharp deceleration.

Always keep your eyes forward while driving upward or downward on a slope, and, if necessary, depress the brake pedal.

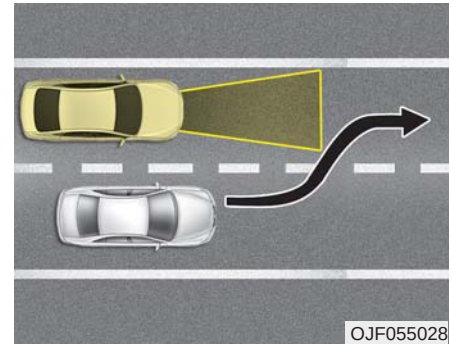

- Changing lanes

When a vehicle changes lanes in front of you, the FCA system may not immediately detect the vehicle, especially if the vehicle changes lanes abruptly. In this situation, you must maintain a safe braking distance, and if necessary, depress the brake pedal to reduce your driving speed in order to maintain a safe distance.

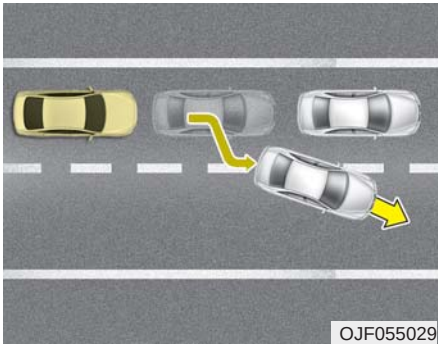

When driving in stop-and-go traffic, and a stopped vehicle in front of you merges out of the lane, the FCA system may not immediately detect the new vehicle that is now in front of you. In this situation, you must maintain a safe braking distance, and if necessary, depress the brake pedal to reduce your driving speed in order to maintain a safe distance.

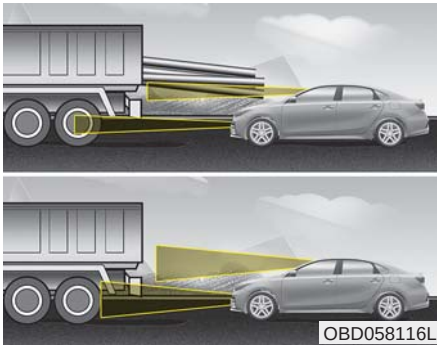

- Recognizing the vehicle

If the vehicle in front of you has cargo that extends rearward from the cab, or when the vehicle in front of you has higher ground clearance, additional special attention is required. The FCA system may not be able to recognize the cargo extending from the vehicle. In these instances, you must maintain a safe braking distance from the rearmost object, and if necessary, depress the brake pedal to reduce your driving

Limitation of the system

The FCA system is designed to detect and monitor the vehicle ahead or detect a pedestrian in the roadway through radar signals and camera recognition to warn the driver that a collision is imminent, and if necessary, apply emergency braking.

Recognizing pedestrians

- The pedestrian is not fully detected by the camera sensor, or the pedestrian is not walking in the upright position.
- The pedestrian moves very fast.
- The pedestrian abruptly appears in front.
- The pedestrian is wearing clothing that easily blends into the background, making it difficult to be detected.
- The outside is too bright or too dark.
- The vehicle drives at night or in the darkness.
- There is an item similar to a person's body structure.
- The pedestrian is small.
- The pedestrian has impaired mobility.
- It is difficult to distinguish the pedestrian from the surroundings.
- The sensor recognition is limited.
- There is a group of pedestrians.
- If a sudden change in the sensor recognition takes place while passing through a speed bump,
- When the vehicle is severely shaken,
- When driving around a circular intersection or traffic circle while following a vehicle in front.
- If the front of the camera lens is contaminated by front glass tinting, film, water repellent coating, damage on glass, or foreign matter (sticker, insect, etc.)
- The radar, camera, or camera lens is damaged.
- If the headlights of a vehicle are not used at night or in a tunnel section, or the light is too weak
- If street light or the light of a vehicle coming from a opposite direction is reflected or when sunlight is reflected by water on the road surface
- When back light is projected in the direction of the vehicle's motion (including the headlights of vehicles)
- When road signs, shadows on the road, tunnel entrances, toll gates, or partial pavement affect the system.
- If the windshield has moisture on its surface or if the windshield freezes.
- Driving in the fog.
- When objects are out of the sensing range of the sensor or radar.

⚠ WARNING

- **Do not use the FCA system when towing a vehicle. Cancel the FCA in the User Settings on the LCD display before towing. Brake application by the FCA system while towing may adversely affect your safety.**
- **Use extreme caution when the vehicle in front of you has cargo that extends rearward from the cab, or when the vehicle in front of you has higher ground clearance.**
- **The FCA system is designed to detect and monitor the vehicle ahead or detect a pedestrian in the roadway through radar signals and camera recognition. It is not designed to detect bicycles, motorcycles, or smaller wheeled objects such as luggage bags, shopping carts, or strollers.**

(Continued)

(Continued)

- **The FCA system may not operate in certain situations. Therefore, never test the operation of the FCA system using a person or object, as doing so may cause severe injury or even death.**

✻ NOTICE

- **When replacing or reinstalling the windscreen, front bumper or radar/camera after removal, have the vehicle inspected by an authorized Kia dealer.**
- **In some instances, the FCA system may be canceled when subjected to electromagnetic interference.**

CRUISE CONTROL SYSTEM

The cruise control system allows you to program the vehicle to maintain a constant speed without depressing the accelerator pedal.

This system is designed to function above approximately 30 km/h (20 mph).

If the cruise control system is left on, (CRUISE indicator light in the instrument cluster illuminated), the cruise control can be switched on accidentally. Keep the cruise control system off (CRUISE indicator light OFF) when the cruise control is not in use, to avoid inadvertently setting a speed.

Use the cruise control system only when traveling on open highways in good weather.

Do not use the cruise control when driving in heavy or varying traffic,or on slipper (rainy, icy, or snow-covered) or winding roads, or on roads with an over 6% up-hill or down-hill grade.

✻ NOTICE

- **During normal cruise control operation, when the SET switch is activated or reactivated after applying the brakes, the cruise control will activate after approximately 3 seconds. This delay is normal.**
- **To activate cruise control, depress the brake pedal at least once after turning the ignition switch to the ON position or starting the engine.**

⚠ WARNING - Misuse of Cruise Control

Do not use cruise control if the traffic situation does not allow you to drive safely at a constant speed and with sufficient distance to the vehicle in front.

To set cruise control speed:

OBD058083L

1. Press the CRUISE button on the steering wheel to turn the system on. The CRUISE indicator light in the instrument cluster will illuminate.
2. Accelerate to the desired speed, which must be more than 30 km/h (20 mph).

OBD058084L

3. Move the lever down (to SET-), and release it at the desired speed. The SET speed on the LCD screen will appear. Release the accelerator at the same time. The desired speed will automatically be maintained.

On a steep grade, the vehicle may slow down slightly when driving uphill or speed up slightly while going downhill.

To increase cruise control set speed:

OBD058086L

Follow either of these procedures:

- Move the lever up (to RES+) and hold it. Your vehicle SET speed will increase by 10 km/h (5 mph). Release the lever at the speed you want.
- Move the lever up (to RES+) and release it immediately. The cruising speed will increase by 1 km/h (1.0 mph) each time the lever is operated in this manner.

To decrease the cruising speed:

OBD058084L

Follow either of these procedures:

- Move the lever down (to SET-) and hold it. Your vehicle SET speed will decrease by 10 km/h (5 mph). Release the lever at the speed you want to maintain.
- Move the lever down (to SET-) and release it immediately. The cruising speed will decrease by 1 km/h (1.0 mph) each time the lever is operated in this manner.

To temporarily accelerate with the cruise control on:

If you want to speed up temporarily when the cruise control is on, depress the accelerator pedal. Increased speed will not interfere with the cruise control operation or change the set speed.

To return to the set speed, take your foot off the accelerator.

To cancel cruise control, do one of the following:

OBD058088L

- Depress the brake pedal.
- Shift into N (Neutral) with an Intelligent Variable Transmission / Dual clutch transmission.
- Press the CANCEL switch.
- Decrease the vehicle speed lower than the memory speed by 20 km/h (12 mph).
- Decrease the vehicle speed to less than approximately 30 km/h (20 mph).

Each of these actions will cancel cruise control operation (The SET speed will disappear.), but it will not turn the system off. If you wish to resume cruise control operation, move the lever up (to RES+). You will return to your previously preset speed.

To resume cruising speed at more than approximately 30 km/h (20 mph):

OBD058086L

If any method other than the CRUISE ON-OFF switch was used to cancel cruising speed and the system is still activated, the most recent set speed will automatically resume when you move the lever up.

It will not resume, however, if the vehicle speed has dropped below approximately 30 km/h (20 mph).

To turn cruise control off, do one of the following:

OBD058083L

- Press the CRUISE button (The CRUISE status on the LCD screen will disappear).
- Turn the ignition off.

Both of these actions will cancel the cruise control operation. If you want to resume the cruise control operation, repeat the steps provided in "To set cruise control speed" on the previous page.

SMART CRUISE CONTROL (IF EQUIPPED)

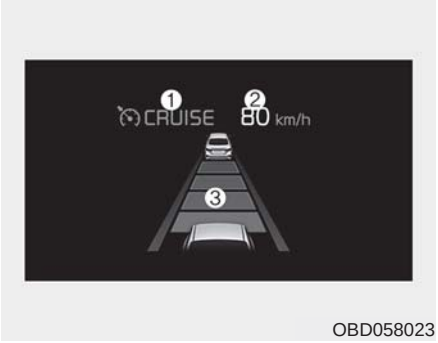

OBD058023

① Cruise indicator
② Set speed
③ Vehicle-to-vehicle distance

The smart cruise control system allows you to program the vehicle to maintain a constant speed and predetermined distance to the vehicle ahead without depressing the accelerator or brake pedal.

⚠ WARNING

For your safety, please read the owner's manual before using the smart cruise control system.

✻ NOTICE

To activate smart cruise control, depress the brake pedal at least once after turning the ignition switch to the ON position or starting the engine. This is to check if the brake switch, which is important in canceling in smart cruise control, is operating normally.

⚠ WARNING

The Smart Cruise Control system (SCC) is deactivated when driving under the speed of 10 km/h (6.0 mph). In this case, the SCC will be unable to maintain the distance entered by the driver. It is the driver's responsibility to depress the brake to maintain a safe distance from the vehicle the driver is approaching.

⚠ WARNING

- Smart cruise control system Limitations

The smart cruise control system is a supplemental system and is not a substitute for safe driving practices. It is the responsibility of the driver to always check the speed and distance to the vehicle ahead.

⚠ WARNING

- If the smart cruise control system is left on, (cruise indicator in the instrument cluster illuminated) the smart cruise control can be activated unintentionally. Keep the smart cruise control system off (cruise indicator off) when the smart cruise control system is not in use to avoid setting a speed which the driver is not aware of.
- Use the smart cruise control system only when traveling on open highways in good weather.
- Do not use the smart cruise control when it may not be safe to keep the car at a constant speed. For instance, in the following situations or environments:
  - Highway interchange and tollgate

(Continued)

(Continued)

- Road surrounded by multiple steel constructions (subway construction, steel tunnel, etc)
- Parking lot
- Lanes beside guard rails on a road
- Slippery road with rain, ice, or snow
- Abrupt curved road
- Steep hills
- Windy road
- Off roads
- Roads under construction
- Roads which have rumble strips
- When driving near crash barriers
- When driving on a sharp curve
- When the vehicle sensing ability decreases due to vehicle modification resulting level difference of the vehicle's front and rear

(Continued)

(Continued)

- When driving in heavy traffic or when traffic conditions make it difficult to drive at a constant speed
- Limited visibility (rain, snow, smog, etc.)

- Pay particular attention to driving conditions whenever using the smart cruise control system.
- Be careful when driving downhill using the SCC.
- Cruise function should not be used when the vehicle is being towed to prevent any damage.
- Always set the vehicle speed under the applicable and lawful speed limit.

(Continued)

(Continued)

- **Always pay continuous attention to road and driving conditions even when the smart cruise control system is being operated.**
- **The smart cruise control system cannot recognize a stopped vehicle, pedestrians or an oncoming vehicle. Always look ahead cautiously in order to react to unexpected and sudden situations.**

Smart cruise control switch

OBDM058096N

CANCEL : Cancels cruise control operation.

CRUISE : Turns cruise control system on or off.

RES + : Resumes or increases cruise control speed.

SET - : Sets or decreases cruise control speed.

: Sets vehicle-to-vehicle distance

Smart Cruise Control speed

To set Smart Cruise Control Speed :

OBDM058119N

1. Press the CRUISE button to turn the system on. The CRUISE indicator in the instrument cluster will illuminate.

2. Accelerate to the desired speed.

   The smart cruise control speed can be set as follows:

   • 30 km/h (20 mph) ~ 180 km/h (110 mph)

OBD058097R

3. Move the lever down (to SET-), and release it at the desired speed. The set speed and vehicle to vehicle distance on the LCD screen will illuminate.
4. Release the accelerator pedal. The desired speed will automatically be maintained.

If there is a vehicle in front of you, the speed may decrease to maintain the distance to the vehicle ahead.

On a steep grade, the vehicle may slow down or speed up slightly while going uphill or downhill.

Vehicle speed may decrease on an upward slope and increase on a ownward slope.

The speed will be set to 30 km/h (20 mph) when there is a vehicle ahead and your vehicle speed is 10 km/h (6 mph) ~ 30 km/h (20 mph).

To increase cruise control set speed:

OBD058098R

Follow either of these procedures:

- Move the lever up (to RES+), and hold it. Your vehicle set speed will increase by 10 km/h (5 mph). Release the lever at the speed you want.
- Move the lever up (to RES+), and release it immediately. The cruising speed will increase by 1.0 km/h (1.0 mph) each time you move the lever up (to RES+) in this manner.
- You can set the speed to a maximum of 180 km/h (110 mph). However, all speed limit laws must be followed.

⚠ CAUTION

Check the driving condition before using the toggle switch. Driving speed sharply increases when you push up and hold the toggle switch.

To decrease the cruise control set speed:

OBD058097R

Follow either of these procedures:

- Move the lever down (to SET-), and hold it. Your vehicle set speed will decrease by 10 km/h (5 mph). Release the lever at the speed you want.
- Move the lever down (to SET-), and release it immediately. The cruising speed will decrease by 1.0 km/h (1.0 mph) each time you move the lever down (to SET-) in this manner.
- You can set the speed to 30 km/h (20 mph).

To temporarily accelerate with the cruise control on:

If you want to speed up temporarily when the cruise control is on, depress the accelerator pedal. Increased speed will not interfere with cruise control operation or change the set speed.

To return to the set speed, take your foot off the accelerator.

If you move the lever down (to SET-) at increased speed, the cruising speed will be set again.

✻ NOTICE

Be careful when accelerating temporarily, because the speed is not controlled automatically at this time even if there is a vehicle in front of you.

Smart cruise control will be temporarily canceled when:

OBD058099R

Cancelled manually

The smart cruise control is temporarily canceled when the brake pedal is depressed or the CANCEL button is pressed. Depress the brake pedal and press the CANCEL button at the same time when the vehicle is at a standstill. The speed and vehicle to vehicle distance indicator on the cluster will disappear and the CRUISE indicator will be illuminated continuously.

Cancelled automatically

- The driver's door is opened.
- The shift lever is shifted to N (Neutral), R (Reverse) or P (Paking).
- The EPB (electronic parking brake) is applied.
- The vehicle speed is over 180 km/h (110 mph)
- The ESC, ABS or TCS is operating.
- The ESC is turned off.
- The sensor or the cover is dirty or blocked with foreign matter.
- When the vehicle is stopped for over 5 minutes.
- The driver starts driving by pushing the toggle switch up (RES+)/down (SET-) or depressing the accelerator pedal, after stopping the vehicle with a vehicle stopped far away in front.
- Engine rpm is in the red zone.
- The accelerator pedal is continuously depressed for a long time.
- The engine speed is in a dangerous range.

- The SCC system has malfunctioned.
- When the braking control is operated for Forward Collision-Avoidance Assist(FCA).
- The vehicle is stopped for more than 5 minutes.
- The driver starts driving by pushing the toggle switch up (RES+)/down (SET-) or depressing the accelerator pedal, after the vehicle is stopped by the Smart Cruise Control system with no other vehicle ahead.
- The vehicle stops and goes repeatedly for a long period of time.
- When the parking brake is locked.
- Engine has some problems.

Each of these actions will cancel the smart cruise control operation. (the set speed and vehicle to vehicle distance on the LCD display will go off.) If the smart cruise control is cancelled automatically, the smart cruise control will not resume even though the RES+ or SET-lever is moved.

✻ NOTICE

If the smart cruise control is cancelled by other than the reasons mentioned, take your vehicle to an authorized Kia dealer and have the system checked.

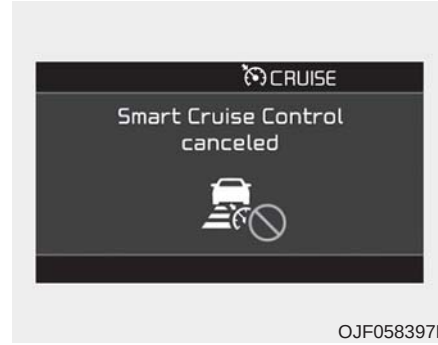

OJF058397L

✻ NOTICE

If the system is automatically cancelled, the warning chime will sound and a message will appear for a few seconds.
You must adjust the vehicle speed by depressing the accelerator or brake pedal according to the road and driving conditions ahead.
Always check the road conditions. Do not rely on the warning chime.

To resume cruise control set speed:

OBD058098R

Reset

If any method other than the “RES+” or “SET-“ lever was used to cancel cruising speed and the system is still activated, the cruising speed will automatically resume when you push the lever up (RES+) or down (SET-).

If you push the lever up (RES+), the speed will resume to the recently set speed. However, if vehicle speed is between 10 km/h (6 mph) and 30 km/h (20 mph), it will resume when there is a vehicle in front of your vehicle.

⚠ WARNING

To reduce the risk of an accident, always check the road conditions when reactivating the smart cruise control using the RES+ lever to ensure the road conditions permit safe use of the cruise control.

To turn cruise control off:

OBD058101R

Press the CRUISE button. (the CRUISE indicator in the instrument cluster will go off).

When the Smart Cruise Control System is not needed, press the [CRUISE] switch and deactivate the system.

- Press the CRUISE button (The CRUISE indicator light will go off.).

Vehicle to vehicle distance setting

To set vehicle to vehicle distance:

OBD058103R

This function allows you to program the vehicle to maintain a relative distance to the vehicle ahead without depressing the accelerator pedal or brake pedal.

The vehicle to vehicle distance will automatically activate when the smart cruise control system is on.

Select the appropriate distance according to road conditions and vehicle speed.

Each time the button is pressed, the vehicle to vehicle distance changes as follows:

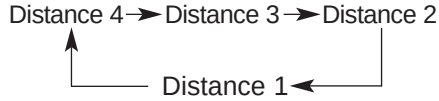

For example, if you drive at 90 km/h (56 mph), the distance maintained is as follows:

Distance 4 - approximately 52.5 m (172 ft)

Distance 3 - approximately 40 m (131 ft)

Distance 2 - approximately 32.5 m (107 ft)

Distance 1 - approximately 25 m (82ft)

✻ NOTICE

The distance is set to the last set distance when the system was used after starting the engine.

When the lane ahead is clear :

OBD058030R

The vehicle speed will maintain the set speed.

⚠ WARNING
- Following Distance

- **To avoid collisions, always be aware of the selected speed and vehicle to vehicle distance settings when activating your smart cruise control system.**
- **Always maintain sufficient braking distance and decelerate your vehicle by applying the brakes if necessary.**

When there is a vehicle ahead of you in your lane :

OBD058029

OBD058030

OBD058031

OBD058032

- The vehicle will maintain the set speed when the lane ahead is clear.
- The vehicle will slow down or speed up to maintain the selected distance when there is a vehicle ahead of you in the lane. (A vehicle will appear in front of your vehicle in the LCD display only when there is an actual vehicle in front of you)
- If the vehicle ahead speeds up, your vehicle will travel at a steady cruising speed after accelerating to the selected speed.

⚠ CAUTION

- ***The warning chime sounds and LCD display blinks if it is hard to maintain the selected distance to the vehicle ahead.***
- ***If the warning chime sounds, actively adjust the vehicle speed by depressing the brake pedal according to the road condition ahead and driving conditions.***
- ***Even if the warning chime is not activated, always pay attention to the driving conditions to prevent dangerous situations from occurring.***
- ***Be alert to road conditions as the radio and outside sounds or conditions could interrupt a warning sound.***

OJF058401L

If the vehicle ahead (vehicle speed: less than 30 km/h (20 mph) disappears to the next lane, the warning chime will sound and a message will appear. Adjust your vehicle speed for vehicles or objects that can suddenly appear in front of you by depressing the brake pedal according to the road and driving conditions ahead.

Radar to detect distance to the vehicle ahead

OBD058014

The sensor detects the distance to the vehicle ahead.

If the sensor is covered with dirt or other foreign matter, the vehicle to vehicle distance control may not operate correctly.

Always keep the area in front of the sensor clean.

Warning message

■ Type A

OJF058403L

■ Type B

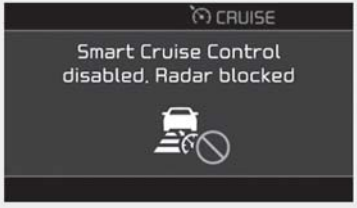

OJF058404L

When the sensor lens cover is blocked with dirt, snow, or debris, the Smart Cruise Control System operation may stop temporarily. If this occurs, a warning message will appear on the LCD display. Remove any dirt, snow, or debris and clean the radar sensor lens cover before operating the Smart Cruise Control System. The Smart Cruise Control system may not properly activate, if the radar is totally contaminated, or if any object or vehicle is not detected after turning ON the engine (e.g. in an open terrain).

SCC (smart cruise control) malfunction message

■ Type A

OJF058405L

■ Type B

OJF058406L

The message will appear when the vehicle to vehicle distance control system is not functioning normally.

In this situation, take your vehicle to an authorized Kia dealer and have the system checked.

⚠ **CAUTION**

- ***Do not install accessories around the sensor and do not replace the bumper by yourself. It may interfere with sensor performance.***
- ***Always keep the sensor and bumper clean.***
- ***Use only a soft cloth to wash the vehicle. Do not spray pressurized water directly on the sensor or sensor cover.***
- ***Be careful not to apply unnecessary force on the radar sensor or sensor cover. If the sensor is forcibly moved out of proper alignment, the Smart Cruise Control System may not operate correctly. In this situation, a warning message may not be displayed.***

  Have the vehicle inspected by an authorized Kia dealer.

(Continued)

(Continued)

- ***Do not damage the sensor or sensor area by a strong impact. If the sensor moves slightly off position, the smart cruise control system will not operate correctly without any warning or indicator from the cluster. If this occurs, take your vehicle to an authorized Kia dealer and have the system checked.***
- ***Use only a genuine Kia sensor cover for your vehicle. Do not paint anything on the sensor cover.***
- ***If the front bumper becomes damaged in the area around the radar sensor, the Smart Cruise Control System may not operate properly.***

To adjust the sensitivity of smart cruise control

The sensitivity of vehicle speed when following the front vehicle to maintain the set distance can be adjusted. Go to the User Settings Mode (Driver Assistance) and SCC Reaction. You may select one of following three stages:

- Slow:

  Vehicle speed to the vehicle ahead to maintain the set distance is slower than normal speed.
- Normal:

  Vehicle speed to the vehicle ahead to maintain the set distance is normal
- Fast:

  Vehicle speed to the vehicle ahead to maintain the set distance is faster than normal speed.

✻ NOTICE

The last selected mode remains in the system.

To convert to cruise control mode:

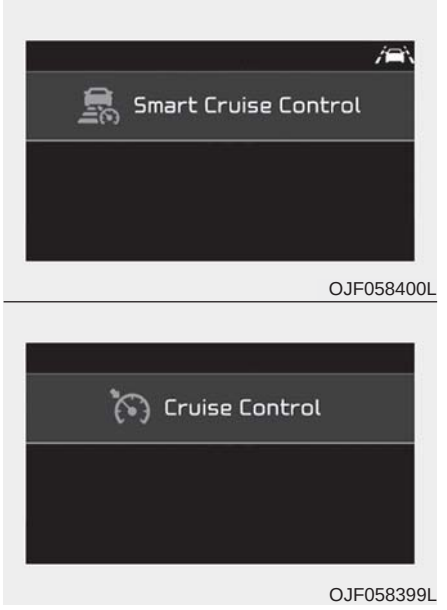

The driver may choose to only use the cruise control mode (speed control function) by doing as follows:

1. Turn the smart cruise control system on (the cruise indicator light will be on but the system will not be activated).
2. Push the distance to distance switch for more than 2 seconds.
3. Choose between "Smart Cruise Control" and "Cruise Control".

When the system is canceled using the CRUISE button or the CRUISE button is used after the engine is turned on, the Smart Cruise Control mode will turn on.

⚠ WARNING

When using the cruise control mode, you must manually assess the distance to other vehicles as the system will not automatically brake to slow down for other vehicles.

Limitations of the system

The smart cruise control system may have limits to its ability to detect distance to the vehicle ahead due to road and traffic conditions.

On curves

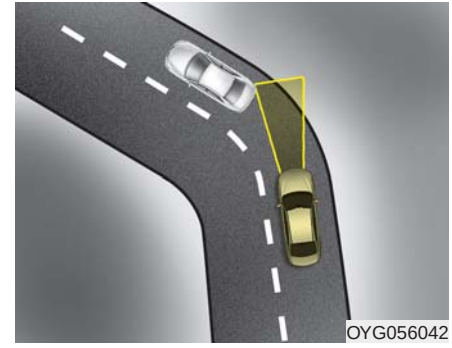

- On curves, the smart cruise control system may not immediately detect a moving vehicle in your lane, and then your vehicle could accelerate to the set speed. Also, the vehicle speed will rapidly decrease when the vehicle ahead is suddenly recognized.
- Select the appropriate set speed on curves and adjust your vehicle speed by depressing the accelerator or brake pedal according to the road and driving conditions ahead.

- Your vehicle speed can be reduced due to a vehicle in the adjacent lane. Adjust your vehicle speed by depressing the brake pedal according to the road and driving conditions ahead. Apply the accelerator pedal and select the appropriate set speed. Check to be sure that the road conditions permit safe operation of the smart cruise control.

On inclines

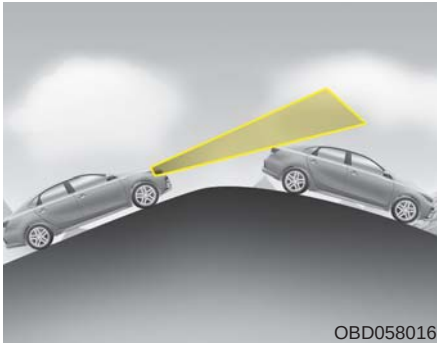

- During uphill or downhill driving, the smart cruise control system may not immediately detect a moving vehicle in your lane, and may cause your vehicle to accelerate to the set speed. Also, the vehicle speed may rapidly decrease when the vehicle ahead is suddenly recognized.
- Select the appropriate set speed on inclines and adjust your vehicle speed by depressing the accelerator or brake pedal according to the road and driving conditions ahead.

Lane changing

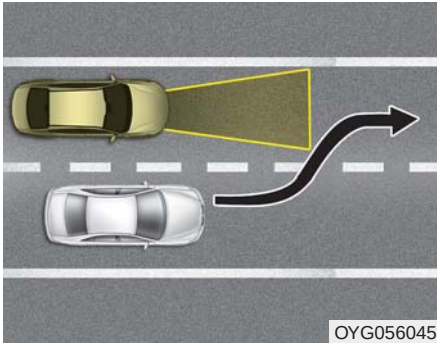

- A vehicle which moves into your lane from an adjacent lane cannot be recognized by the sensor until it is in the sensor's detection range.
- The sensor may not immediately detect when a vehicle cuts in suddenly. Always pay attention to the traffic, road and driving conditions.
- If a vehicle which moves into your lane is slower than your vehicle, your speed may decrease to maintain the distance to the vehicle ahead.

- If a vehicle which moves into your lane is faster than your vehicle, your vehicle will accelerate to the selected speed.

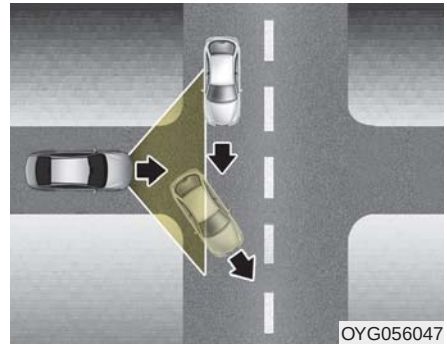

- Your vehicle may accelerate when a vehicle ahead of you moves out of the sensor's range and is not detected.
- When you are warned that the vehicle ahead of you is not detected, drive with caution.

Vehicle recognition

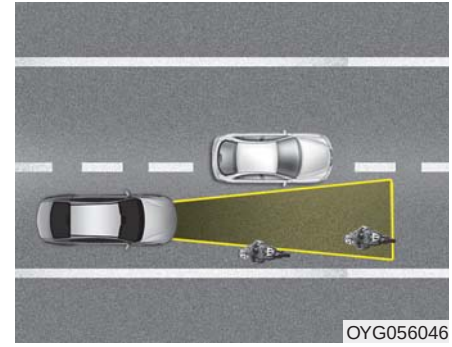

Some of the following vehicles ahead in your lane may not be recognized by the sensor:

- Narrow vehicles such as motorcycles or bicycles
- Vehicles offset to one side
- Slow-moving vehicles or suddenly decelerating vehicles
- Stopped vehicles
- Vehicles with small rear profiles such as trailers with no loads

A vehicle ahead may not be recognized correctly by the sensor when any of the following occurs:

- When the vehicle is pointing upwards due to overloading in the trunk(tailgate)
- While making turns
- When driving to one side of the lane
- When driving on narrow lanes or on curves

Adjust your vehicle speed by depressing the brake pedal according to the road and driving conditions ahead.

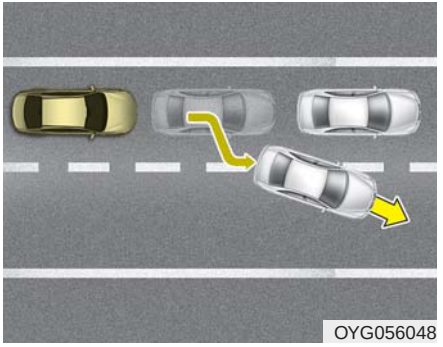
OYG056048

- When vehicles are at a standstill and the vehicle in front of you changes to the next lane, be careful when your vehicle starts to move because it may not immediately recognize the stopped vehicle in front of you.

In this situation you must maintain a safe braking distance, and if necessary, depress the brake pedal to reduce your driving speed in order to maintain a safe distance.

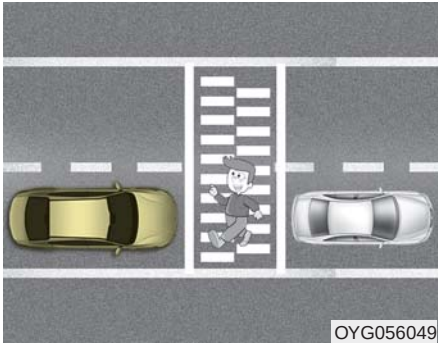
OYG056049

- Always look out for pedestrians when your vehicle is maintaining a distance with the vehicle ahead.

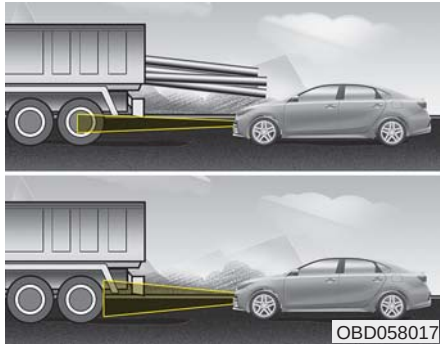

- Always be cautious when approaching vehicles that are taller with higher clearance, or vehicles carrying loads that stick out of the back of the vehicle.

⚠ WARNING - Inclines and towing

Do not use the smart cruise control system on steep inclines or when towing another vehicle or trailer since such extreme loading can interfere with your vehicle's ability to maintain the selected speed.

⚠ WARNING

When using the Smart Cruise Control, take the following precautions:

- **If an emergency stop is necessary, you must apply the brakes. The smart cruise control system may not be able to completely stop the vehicle or avoid a collision in every situation.**
- **Keep a safe distance according to road conditions and vehicle speed. If the vehicle to vehicle distance is too close during high-speed driving, a serious collision may result.**
- **Always maintain sufficient braking distance and decelerate your vehicle by applying the brakes if necessary.**
- **The Smart Cruise Control system may not recognize a stopped vehicle, pedestrians or an oncoming vehicle.**

(Continued)

(Continued)

Always look ahead cautiously in order to react to unexpected and sudden situations.

- Vehicles moving in front of you making frequent lane changes may cause a delay in the system's reaction or may cause the system to react to a vehicle actually in an adjacent lane.

  Always drive cautiously in order to react to unexpected and sudden situations.

- Always be aware of the selected speed and vehicle to vehicle distance. The driver should not solely rely on the system but always pay attention to driving conditions and control vehicle speed.

(Continued)

(Continued)

- The Smart Cruise Control system may not recognize complex driving situations, so always pay attention to driving conditions and control your vehicle speed.
- For safe operation, carefully read and follow the instructions in this manual before use.

⚠ CAUTION

The smart cruise control system may not operate temporarily due to electrical interference.

✻ NOTICE

The Smart Cruise Control System may not operate properly due to:

- Electrical interference.
- Modifying the suspension.
- Differences of tire abrasion or tire pressure.
- Installing different type of tires.

This device complies with Industry Canada licence-exempt RSS standard(s).

Operation is subject to the following conditions:

(1) This device may not cause interference, and

(2) This device must accept any interference, including interference that may cause undesired operation of the device.

(3) Changes or modifications not expressly approved by the party responsible for compliance could void the user's authority to operate the device.

DRIVE MODE INTEGRATED CONTROL SYSTEM (IF EQUIPPED)

OBD058061

The drive mode may be selected according to the driver's preference or road condition.

The mode changes whenever the DRIVE MODE button is pressed.

- SMART mode : SMART mode automatically adjusts the driving mode (ECO " NORMAL " SPORT) in accordance with the driver's driving habits.
- NORMAL mode : NORMAL mode provides smooth driving and a comfortable ride. When normal mode is selected, it is not displayed on the cluster.
- SPORT mode : SPORT mode provides a sporty but firm ride.

The driving mode will be set to NORMAL mode when the engine is restarted. If is in SMART/NORMAL mode, NORMAL mode will be set when the engine is restarted.

SMART mode

OBDM058127N

OJF058431L

OJF058432L

SMART

SMART mode selects the proper driving mode among ECO, NORMAL and SPORT by judging the driver's driving habits (i.e. mild or dynamic) from the brake pedal depression or the steering wheel operation.

- Press the DRIVE MODE button to activate SMART mode. When SMART mode is activated, the indicator illuminates on the instrument cluster.
- The indicator illuminates in blue when the driver's driving is categorized to be mild. It illuminates in white when the driver's driving is categorized to be normal. It illuminates in red when the driver's driving is categorized to be dynamic during abrupt braking or sharp curves.
- The vehicle starts in NORMAL mode if the engine was turned OFF in SMART mode.
- SMART mode automatically controls driving characteristics, such as gear shifting patterns, engine torque, and ride quality in accordance with the driver's driving habits.

✻ NOTICE

- **When you drive the vehicle mildly drive the vehicle in SMART mode, the driving mode changes to ECO mode to improve fuel efficiency. However, the actual fuel efficiency may differ in accordance with your driving situation (i.e. upward/downward slope, vehicle deceleration/acceleration).**
- **When you drive the vehicle dynamically drive the vehicle in SMART mode by abruptly decelerating or sharply turning, the driving mode changes to SPORT mode. However, it may adversely affect fuel economy.**

Various driving situations which you may encounter in SMART mode

- The driving mode automatically changes to ECO mode after a certain period of time when you gently depress the accelerator pedal (Your driving is categorized to be mild).
- The driving mode automatically changes from SMART ECO mode to SMART NORMAL mode after a certain period of time when you sharply or repetitively depress the accelerator pedal.
- The driving mode automatically changes to SMART NORMAL mode with the same driving patterns when the vehicle starts to drive on an upward slope of a certain angle. The driving mode automatically returns to SMART ECO mode when the vehicle enters a leveled road.
- The driving mode automatically changes to SMART SPORT when you abruptly accelerate the vehicle or repetitively operate the steering wheel (Your driving is categorized to be sporty). In this mode, your vehicle drives in a lower gear for faster accelerating/decelerating and increased engine brake performance.
- You may still sense the engine brake performance, even when you release the accelerator pedal in SMART SPORT mode. It is because your vehicle remains in a lower gear over a certain period of time.
- The driving mode automatically changes to SMART SPORT mode only in dynamic driving situations. In most normal driving situations the driving mode sets to either SMART ECO mode or SMART NORMAL mode.

Limitation of SMART mode

The SMART mode may be limited in following situations. (The OFF indicator illuminates in those situations.)

- The driver manually moves the shift lever : It deactivates SMART mode.
- The cruise control is activated : The cruise system may deactivate the SMART mode. (SMART mode is not automatically deactivated just by activing the cruise system.)
- The transmission oil temperature is either extremely low or extremely high : The SMART mode can be active in most of the normal driving situations. However an extremely high/ low transmission oil temperature may temporarily deactivate the SMART mode, because the transmission condition is out of normal operation condition.

SPORT mode

SPORT

SPORT mode focuses on dynamic driving by automatically adjusting the steering wheel, engine and transmission system.

- When the DRIVE MODE button is pressed and the SPORT mode is selected, the SPORT indicator (red) will illuminate.
- When the SPORT mode is activated, and the engine start/stop button is turned off and on, it will change to NORMAL mode. To turn on the SPORT mode, press the DRIVE MODE button again.
- If the system is activated:
  - While holding vehicle speed, it maintains the gear and RPM for some time even though the accelerator pedal is not depressed.
  - Up-shifting is delayed.

✻ NOTICE

In Sport drive mode, the fuel efficiency may decrease.

BLIND-SPOT COLLISION WARNING (BCW) (IF EQUIPPED)

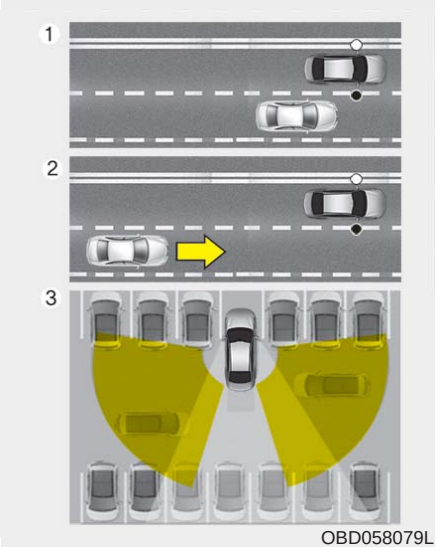

The Blind-Spot Collision Warning (BCW) system uses radar sensors in the rear bumper to monitor and warn the driver of an approaching vehicle in the driver's blind spot area.

The system monitors the rear area of the vehicle and provides information to the driver with an audible alert and an indicator on the outside rearview mirrors.

⚠ WARNING

- **Always be aware of road conditions while driving and be alert for unexpected situations even though the BCW system is operating.**
- **The BCW is not a substitute for proper and safe driving. Always drive safely and use caution when changing lanes or backing up the vehicle. The BCW may not detect every object alongside the vehicle.**

(1) Blind spot area

The BCW range varies relative to vehicle speed. Note that if your vehicle is traveling much faster than the vehicles around you, the warning will not occur.

(2) Closing at high speed

The BCW-Closing at high speed feature will alert you when a vehicle is approaching in an adjacent lane at a high rate of speed. If the driver activates the turn signal when the system detects an oncoming vehicle, the system sounds an audible alert. Distance from an approaching vehicle can be seen differently according to the relative speed.

(3) RCCW (Rear Cross-Traffic Collision Warning)

The RCCW feature monitors approaching cross traffic from the left and right side of the vehicle when your vehicle is in reverse. The feature will operate when the vehicle is moving in reverse below about 10 km/h (6 mph). If oncoming cross traffic is detected, a warning chime will sound. Distance from an approaching vehicle can be seen differently according to the relative speed.

⚠ WARNING

- **Always check the road conditions while driving for unexpected situations even though the BCW (Blind-Spot Collision Warning) system is operating.**
- **BCW (Blind-Spot Collision Warning) system is a system made for convenience. Do not solely rely on the system but always pay attention to drive safely.**
- **Distance from an approaching vehicle can be seen differently according to the relative speed.**

BCW (Blind-Spot Collision Warning) / LCA (Lane Change Assist)

Operating conditions

OBD058062

The indicator on the switch will illuminate when the BCW (Blind-Spot Collision Warning) system switch is pressed with the ignition switch ON. If the vehicle speed exceeds 30 km/h (20 mph), the system will activate.

If you press the switch again, the switch indicator and system will be turned off.

If the ignition switch is turned OFF and ON, the system returns to the previous state.

When the system is not being used, turn the system off by pressing the switch.

When the system is turned on, the warning light will illuminate for 3 seconds on the outside rearview mirror.

Warning type

The system will activate when:

1. The system is on
2. Vehicle speed is above 30 km/h (20 mph)
3. Other vehicles are detected in the blind spot area

⚠ WARNING

- **Always check the road conditions while driving for unexpected situations even though the Blind-Spot Collision Warning System (BCW) is operating.**
- **The Blind-Spot Collision Warning System (BCW) is a supplemental system to assist you. Do not rely entirely on the system. For your safety, always pay attention while driving.**

(Continued)

(Continued)

- **The Blind-Spot Collision Warning System (BCW) is not a substitute for proper and safe driving. Always drive safely and use caution when changing lanes or backing the vehicle up. The Blind-Spot Collision Warning System (BCW) may not detect every object alongside the vehicle.**

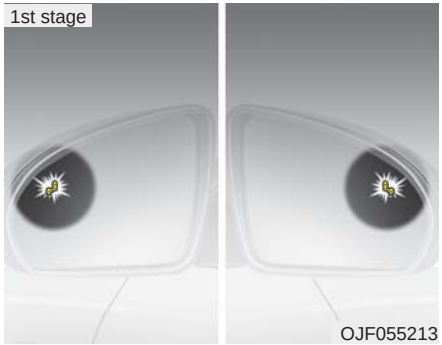

First stage alert

If a vehicle is detected within the boundary of the system, a yellow warning light will illuminate on the outside rearview mirror.

Once the detected vehicle is no longer within the blind spot area, the warning will turn off according to the driving conditions of the vehicle.

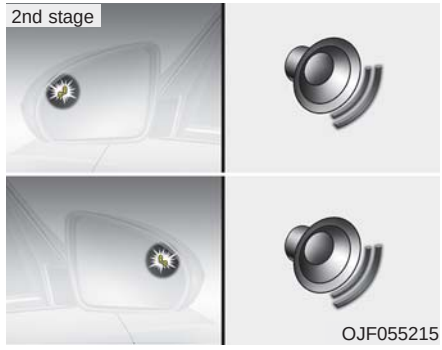

Second stage alert

A warning chime to alert the driver will activate when:

1. A vehicle has been detected in the blind spot area by the radar system (the warning light will illuminate on the outside rearview mirror, i.e., in the first stage alert)

   AND

2. The turn signal is applied (same side as where the vehicle is being detected).

When this alert is activated, the warning light on the outside rearview mirror will also blink.

If you turn off the turn signal indicator, the second stage alert (the warning chime and the blinking warning light on the outside rearview mirror) will be deactivated.

- The second stage alarm can be activated and deactivated.

• To activate the alarm:

  Go to the User Settings Mode → Driver Assistance and select “Blind-Spot Collision Warning” on the LCD display.

• To deactivate the alarm:

  Go to the User Settings Mode → Driver Assistance and deselect “Blind-Spot Collision Warning” on the LCD display.

⚠ CAUTION

The warning chime function helps alert the driver. Deactivate this function only when it is necessary, and refer to the “User Settings Mode” section in Chapter 4.

Detecting sensor

The sensors are located inside the rear bumper.

Always keep the rear bumper clean for the system to work properly.

RCCW (Rear Cross-Traffic Collision Warning)

OYG056140

When your vehicle moves backwards from a parking position, the sensor detects approaching vehicles to the left or right side and gives information to the driver.

Operating conditions to operate

- Go to “User Settings → Driving Assist and select Rear Cross Traffic Collision Warning” on the LCD display.

  The system will turn on and stand-by to activate. If you deactivate this function in the cluster, the system will stop.

❊For more information, refer to the “LCD Display” section in Chapter 4.

✻ NOTICE

- **If the vehicle is turned off and on again, the RCCW system will return to the state right before the vehicle was turned off.**
- **The system will activate when vehicle speed is below 10 km/h (6.2 mph) and with the shift lever in R (Reverse).**
- **The Rear Cross-Traffic Collision Warning (RCCW) detecting range is approximately 0.5 m ~ 20 m (1 ft ~ 65 ft) in the direction of both lateral sides of the car.**
  An approaching vehicle will be detected if its vehicle speed is within 4 km/h ~ 36 km/h (2.5 ~ 22.5 mph).
  Note that the detecting range may vary under certain conditions. As always, use caution and pay close attention to your surroundings when backing up your vehicle.

Warning type

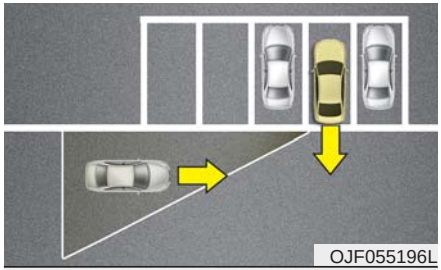
OJF055196L

OBD058063

OBD058064

If the vehicle detected by the sensors approaches your vehicle, the warning chime will sound, the warning light on the outside rearview mirror will blink and a message will appear on the LCD display.

✻ NOTICE

- The warning chime will turn off:
  - When the detected vehicle moves out of the sensing area or
  - If your vehicle is moved away from the detected vehicle or
  - When the vehicle is right behind your vehicle or
  - When the vehicle is not approaching your vehicle or
  - When the other vehicle slows down.
- The system may not operate properly due to other factors or circumstances.
  Always pay attention to your surroundings.
- If the sensing area near the rear bumper is blocked by either a wall, barrier, or parked vehicle, the system sensing area may be reduced.

⚠ WARNING

- **When the BCW system is activated, the warning light on the outside rearview mirror will illuminate whenever a vehicle is detected at the rear side by the system.**

  To avoid accidents, do not focus only on the warning light and neglect to see the surroundings of the vehicle.
- **Drive safely even though the vehicle is equipped with a BCW (Blind-Spot Collision Warning) system. Do not solely rely on the system but check the blind spot area for yourself before changing lanes.**

  The system may not alert the driver in some conditions, so always check the surroundings while driving.

(Continued)

(Continued)

- **The Blind-Spot Collision Warning system (BCW) and Rear Cross-Traffic Collision Warning (RCCW) are not substitutes for proper and safe driving practices. Always drive safely and use caution when changing lanes or backing up your vehicle. The Blind-Spot Collision Warning system (BCW) may not detect every object alongside the vehicle.**

⚠ CAUTION

- ***The system may not work properly if the bumper has been replaced or if repair work has been done near the sensor.***
- ***The detection area differs according to the width of the road. If the road is narrow, the system may detect other vehicles two lanes away.***
- ***Also, if the road is very wide, the system may not detect other vehicles in the next lane.***
- ***The system might be turned off due to strong electromagnetic waves.***

Warning message

OJF058433L

The sensor may be limited when the conditions below exist.

If there is a problem with the BCW system, a warning message will appear and the light on the switch will turn off. The system will turn off automatically.

- One or both of the sensors on the rear bumper is blocked by dirt, snow, or a foreign object.
- Driving in rural areas where the BCW sensor does not detect another vehicle for an extended period of time.

- When there is inclement weather such as heavy snow or rain.
- A trailer or carrier is installed. (To use the BCW system, remove the trailer or carrier from your vehicle.)

Turn off the system by pressing the BCW switch and deselecting Rear Cross-Traffic Collision Warning (RCCW) from the User Settings mode on the cluster, when using a trailer or carrier behind your vehicle.

If any of these conditions occur, the light on the BCW switch and the system will turn off automatically.

When the BCW canceled warning message is displayed in the cluster, check to make sure that the rear bumper is free from any dirt or snow in the areas where the sensor is located. Remove any dirt, snow, or foreign material that could interfere with the radar sensors.

After any dirt or debris is removed, the BCW system should operate normally after about 10 minutes of driving the vehicle.

If the system still does not operate normally, have your vehicle inspected by an authorized Kia dealer.

■ Type A

OJF058434L

■ Type B

OJF058435L

If the system does not work properly, a warning message will appear and the light on the switch will turn off. The system will turn off automatically.

In this situation, take your vehicle to an authorized Kia dealer and have the system checked.

Non-operating condition

The outside rearview mirror may not alert the driver when:

- The outside rearview mirror housing is damaged or covered with debris.
- The mirror is covered with dirt, snow, or debris.
- The window is covered with debris.
- The windows are darkly tinted.

Driver's Attention

The driver must be cautious in the situations below, because the system may not detect other vehicles or objects in certain circumstances.

- **When a trailer or carrier is installed.**
- **The vehicle drives in inclement weather such as heavy rain or snow.**
- **The sensor is polluted with rain, snow, mud, etc.**
- **The rear bumper where the sensor is located is covered with a foreign object such as a bumper sticker, a bumper guard, a bike rack, etc.**
- **The rear bumper is damaged, or the sensor is out of the original default position.**
- **The vehicle height gets lower or higher due to heavy loading in the luggage compartment, abnormal tire pressure, etc.**
- **When the temperature near the rear bumper area is high or low.**

(Continued)

(Continued)

- **When the sensors are blocked by other vehicles, walls or parking-lot pillars.**
- **The vehicle drives on a curved road or through a tollgate.**
- **The vehicle is driven near areas containing metal substances such as a construction zone, railroad, etc.**
- **There is a fixed object near the vehicle, such as a guardrail, person, animal, etc.**
- **While going down or up a steep road where the height of the lane is different.**
- **When driving through a narrow road with many trees or bushes.**
- **When driving on wet surfaces.**
- **When driving through a large area with few vehicles or structures around, such as a desert, rural area, etc.**
- **A large vehicle, such as a bus or truck, is nearby.**

(Continued)

(Continued)

- **When other vehicles are close to your vehicle.**
- **When the other vehicle approaches very close.**
- **When the detected vehicle also moves back, as your vehicle drives back.**
- **While changing lanes.**
- **If the vehicle has started at the same time as the vehicle next to you and has accelerated.**
- **When the other vehicle passes at a very fast speed.**
- **When the vehicle in the next lane moves two lanes away from you OR when the vehicle two lanes away moves to the next lane to you.**
- **The vehicle is turning left or right at a crossroads.**

This device complies with Industry Canada licence-exempt RSS standard(s).

Operation is subject to the following conditions:

(1) This device may not cause interference, and

(2) This device must accept any interference, including interference that may cause undesired operation of the device.

(3) Changes or modifications not expressly approved by the party responsible for compliance could void the user's authority to operate the device.

LANE KEEPING ASSIST (LKA) SYSTEM (IF EQUIPPED)

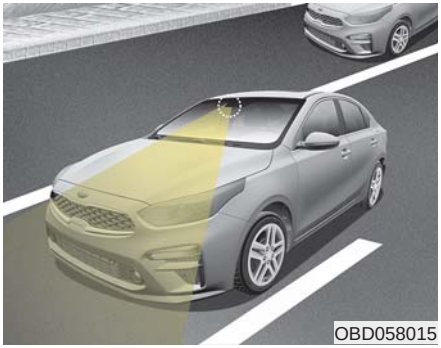

The Lane Keeping Assist system is designed to detect the lane markers on the road with a front view camera at the front windshield, and assists the driver's steering to help keep the vehicle in the lanes.

When the system detects the vehicle straying from its lane, it alerts the driver with a visual and audible warning, while applying a slight counter-steering torque, in an attempt to prevent the vehicle form moving out of its lane.

⚠ WARNING

The Lane Keeping Assist System is a supplemental system and is not a substitute for safe driving practices. It is the responsibility of the driver to always pay attention and drive safely.

⚠ WARNING

- **The driver is responsible for being aware of surroundings and steering the vehicle while employing safe driving practices.**
- **Do not steer the steering wheel suddenly when the steering wheel is being assisted by the system.**

✻ NOTICE

- **LKA helps prevent the driver from moving out of the lane unintentionally by assisting the driver's steering. However, the system is just a convenience function and the steering wheel is not always controlled. While driving, the driver should pay attention to the steering wheel.**
- **The operation of the LKA can be cancelled or not work properly because of road conditions and the surroundings. Always be cautious when driving.**
- **Do not disassemble the front view camera when installing tint on the windows or applying any type of coatings or accessories.**
  If you disassemble the camera and assemble it again, take your vehicle to an authorized Kia dealer and have the system checked to need a calibration.

(Continued)

(Continued)

- **When you replace the windshield glass, front view camera or system, take your vehicle to an authorized Kia dealer and have the system check to see if you need a calibration.**
- **The system is designed to detect lane markers using a front view camera. If the lane markers are hard to detect, then the system may be limited. Always be cautious when using the system.**
- **When the lane markers are hard to detect, please refer to the "Driver's Attention" section in this Chapter**
- **Do not remove or damage the related parts of LKA.**
- **Do not place objects on the dashboard that reflect light such as mirrors, white paper, etc. This may prevent the system from functioning.**

(Continued)

(Continued)

- **If the audio sound is excessive, you may not hear the warning sound of the LKA.**
- **If you continue to drive with your hands off the steering wheel, the LKA system will stop controlling the steering wheel after the hands off alarm. Afterwards, if you drive with your hands on the steering wheel, the control will be activated again.**
- **At high vehicle speeds, the steering torque of LKA may not be enough to keep your vehicle within the lane. If so, the vehicle may move out of its lane. Therefore, obey any applicable speed limits when using LKA.**
- **If you attach objects to the steering wheel, the system may not assist steering.**
- **If you attach objects to the steering wheel, the hands off alarm may not work properly.**

LKA operation

OBD058035

To activate/deactivate the LKA:

With the ignition switch in the ON position, press the LKA button located on the instrument panel on the lower left hand side of the driver.

The indicator in the cluster display will initially illuminate white.

When the indicator(white) activated in the previous ignition cycle, the system turns on without any control.

If you press the LKA button again, the indicator on the cluster display will go off.

The color of the indicator will change depend on the condition of LKA.

- White : Sensor does not detect the lane marker or vehicle speed is less than 64 km/h (40 mph).
- Green : Sensor detects the lane marker and system is able to control the steering.

LKA activation

- To see the LKA screen on the LCD display in the cluster, Tab to the ASSIST mode ( ).
- For further details, refer to the [menu settings] section in Chapter 4.
- After LKA is activated, if both lane markers are detected, vehicle speed is over 64 km/h (40 mph) and all the activation conditions are satisfied, a green steering wheel indicator will illuminate, and the steering wheel will be controlled.

⚠ WARNING

The Lane Keeping Assist system is a system to help prevent the driver from leaving the lane. However, the driver should not rely solely on the system and should always check the road conditions while driving.

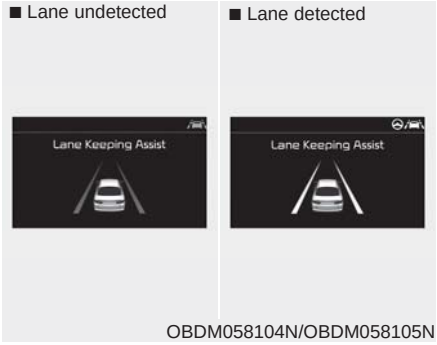

OBDM058104N/OBDM058105N

If the speed of the vehicle is over 64 km/h (40 mph) and the system detects lane markers, the color changes from gray to white

When the conditions below are met, LKA will be enabled to assist steering.

- Vehicle speed is above 64 km/h (40 mph).
- Both lane markers are detected by LKA.
- The vehicle is between the lane markers.

If LKA can assist steering, a green steering wheel indicator will illuminate.

Warning

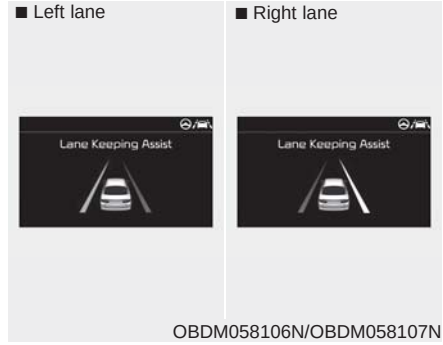

OBDM058106N/OBDM058107N

If the vehicle leaves a lane, the lane marker you cross will blink on the LCD display.

If the vehicle moves out of its lane because the steering torque for assistance is insufficient, the line indicator will blink.

- If all the conditions to activate LKA are not satisfied, the system will convert to Lane Departure Warning (LDW) and only warn the driver when the driver crosses the lane markers. In this scenario, the LDW system does not provide any steering inputs to the vehicle for you. Accordingly, you must take the necessary steps to maintain control of the vehicle and keep it within the lanes.

OBD058111R

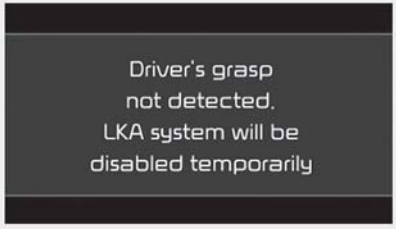

OJF058417L

If the driver takes hands off the steering wheel for several seconds while the LKA is activated, the system will warn the driver.

⚠ WARNING

- **Always keep your hands on the steering wheel while driving.**
- **If you hold the steering wheel with a light grip, the system may also generate the hands off warning because LKA can treat the situation as you not grabbing the wheel.**

If the driver still does not have their hands on the steering wheel after several seconds, the system will only warn the driver when the driver crosses the lane lines. In this scenario, the system does not provide any steering inputs to the vehicle for you. Accordingly, you must take the necessary steps to maintain control of the vehicle and keep it within the lanes.

However, once the driver has their hands on the steering wheel again, the system will again provide steering inputs if it detects the vehicle leaving the lane.

⚠ WARNING

- **The LKA system is a supplemental system only. It is the responsibility of the driver to safely steer the vehicle and to maintain it in its lane**
- **Even though the steering is assisted by the system, the driver may control the steering wheel.**
- **Turn off the LKA system and drive without the use of the system in the following situations:**
  - **In bad weather**
  - **In bad road conditions**
  - **When the steering wheel needs to be controlled by the driver frequently.**
- **The steering wheel may feel heavier when the steering wheel is assisted by the system than when it is not.**

✻ NOTICE

- **Even though the steering is assisted by the system, the driver may control the steering.**
- **The steering wheel may feel heavier when the steering wheel is assisted by the system than when it is not.**

The system will be cancelled when:

- You change lanes with the turn signal.
  - Using the turn signal to change lanes.
  - If you change lanes without the turn signal on, the steering wheel might be controlled.
- LKA can transition to steering assist mode when the car is near the middle of the lane after the system is turned on or the lane was changed. LKA can not assist steering if the vehicle follows lane marker too close continuously before transition to steering assist mode.
- The control of ESC (Electronic Stability Control) or VSM (Vehicle Stability Management) is activated.
- The steering will not be assisted when you drive fast on a sharp curve.
- The steering will not be assisted when vehicle speed is below 64 km/h (40 mph) and over 177 km/h (110 mph). Always obey all traffic laws and drive safely.
- The steering will not be assisted when you change lanes quickly.
- The steering will not be assisted when you brake suddenly.
- The steering will not be assisted when the lane is very wide or narrow.
- The steering will not be assisted when only one side lane marker is detected.
- There are more than two lane markers such as a construction area.
- Radius of a curve is too small.
- When you turn the steering wheel suddenly, the LKA will be disabled temporarily.
- Driving on a steep slope or hill.

DRIVER'S ATTENTION

The driver must be cautious in the following situations. LKA may not work properly when recognition of the lane markers is poor or limited:

- **When lane and road condition are poor**
  - **It is difficult to distinguish the lane marker from the road, such as when the lane marker is covered with dust or sand.**
  - **It is difficult to distinguish the color of the lane marker from the road.**
  - **There is something that looks like a lane marker.**
  - **The lane marker is indistinct or damaged.**
  - **The number of lanes increases/decreases or the lane lines are crossing (Driving through a toll plaza/toll gate, merged/divided lane).**
  - **There are more than two lane markers.**
  - **The lane marker is very thick or thin.**

(Continued)

(Continued)

- **The lane marker is not visible due to snow, rain, stain, a puddle or other factors.**
- **A shadow is on the lane marker because of a median strip, guardrail, noise barriers or other objects.**
- **When the lane markers are complicated or a structure substitutes for the lines such as in a construction**
- **There are crosswalk signs or other symbols on the road.**
- **The lane suddenly disappears such as at an intersection.**
- **The lane marker in a tunnel is covered with dirt or oil, etc.**

- **When external conditions interfere**
  - **The brightness changes suddenly when entering/exiting a tunnel or passing under a bridge.**
  - **The headlamps are not on at night or in a tunnel, or the light level is low.**
  - **There is a boundary structure in the roadway.**

(Continued)

(Continued)

- **The light from a street lamp, sun, oncoming vehicle, etc. reflects off water on the road.**
- **When light shines brightly from behind the vehicle.**
- **The distance from the vehicle ahead is very short or the vehicle ahead covers up the lane line.**
- **You drive on a steep grade or a sharp curve.**
- **The vehicle vibrates heavily.**
- **The temperature near the inside mirror is very high due to direct sun light and etc.**

- **When front visibility is poor**
  - **The lens or windshield is covered by foreign materials.**
  - **The sensor cannot detect the lane because of fog, heavy rain or snow.**
  - **The windshield is fogged by humid air in the vehicle.**
  - **There is an object on the dashboard that interferes with the camera.**

⚠ WARNING

The Lane Keeping Assist system is a system to help prevent the driver from leaving the lane. However, the driver should not rely solely on the system and should always take necessary actions to ensure safe driving practices.

LKA malfunction

■ Type A

OBD058112R

■ Type B

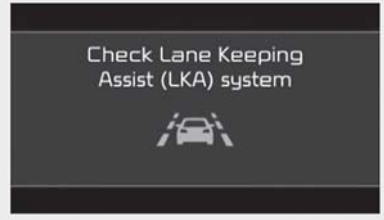

OJF058419L

- If there is a problem with the system, a message will appear. If the problem continues, the LKA fail indicator will illuminate.

LKA fail indicator

The LKA fail indicator (yellow) will illuminate with an audible warning if the LKA is not working properly. If this occurs have the system checked by an authorized Kia dealer.

When there is a problem with the system, do one of the following:

- Turn the system on after turning the engine off and on again.
- Check if the ignition switch is in the ON position.
- Check if the system is affected by the weather. (ex: fog, heavy rain, etc.)
- Check if there is foreign matter on the camera lens

If the problem is not solved, take your vehicle to an authorized Kia dealer and have the system checked.

LKA function change

The driver can change LKA to Lane Departure Warning (LDW) system or change the LKA mode between Standard LKA and Active LKA from the User Settings Mode on the LCD display.

The driver can choose the mode by placing the ignition switch to the ON position and by selecting ‘User Settings’, ‘Driver Assistance’, and ‘Lane Safety’.

The system is automatically set to Standard LKA when your vehicle is first delivered from the factory.

Lane Departure Warning

LDW alerts the driver with a visual and acoustic warning when the system detects the vehicle leaving the lane. In this mode, the system will not provide steering inputs. When the vehicle’s front wheel contacts the inside edge of the lane, LKA issues the lane departure warning.

Standard LKA

The Standard LKA mode guides the driver to keep the vehicle within the lanes. It provides inputs to the steering when the vehicle is about to deviate from the lanes.

Active LKA

The active LKA mode provides more frequent steering wheel control in comparison with the Standard LKA mode. Active LKA can reduce the driver’s fatigue by assisting the steering to help maintain the vehicle in the middle of the lane.

DRIVER ATTENTION WARNING (DAW, IF EQUIPPED)

The Driver Attention Warning (DAW) system is designed to warn the driver of potentially hazardous driving situations if it detects inattentive driving practices.

System setting and activation

System setting

- The Driver Attention Warning system is set to be the Normal position when your vehicle is first delivered to you from the factory.
- To turn ON the Driver Attention Warning system, turn on the engine and then select 'User Settings → Driver Assistance → DAW (Driver Attention Warning) → High sensitivity/Normal sensitivity/Off' on the LCD display.
- The driver can select the Driver Attention Warning system mode.
  - Off : The Driver Attention Warning system is deactivated.
  - Normal sensitivity : The Driver Attention Warning system alerts the driver of his/her fatigue level or inattentive driving practices.
  - High sensitivity : The Driver Attention Warning system alerts the driver of his/her fatigue level or inattentive driving practices faster than Normal mode.
- The Driver Attention Warning system mode will be maintained, as selected, when the engine is restarted.

Display of the driver's attention level

OBD058108R

OBD058109R

OBD058110R

- The driver can monitor their driving conditions on the LCD display.
  - Select 'User Settings Mode' and then 'Driver Assistance' on the LCD display. (For more information, refer to the “LCD Display” section in Chapter 4.)
- The driver's attention level is displayed on a scale of 1 to 5. The lower the number is, the more inattentive the driver is.
- The number decreases when the driver does not take a break for a certain period of time.
- The number increases when the driver attentively drives for a certain period of time.
- When the driver turns on the system while driving, it displays ‘Last Break time’ and level reflected that.

Take a break

OJF058426L

- The “Consider taking a break” message appears on the LCD display and a warning sounds in order to suggest that the driver take a break when the driver's attention level is below 1.
- The Driver Attention Warning system will not suggest a break when the total driving time is shorter than 10 minutes.

Resetting the system

OBD058114R

- The last break time is set to 00:00 and the driver's attention level is set to 5 (very attentive) when the driver resets the Driver Attention Warning system.
- The driver attention warning system resets in the following situations.
  - The engine is turned OFF.
  - The driver unfastens the seat belt and then opens the driver's door when stopped.
  - The driver takes a break from driving that lasts more than 10 minutes.
- The driver attention warning system will operate again when the driver restarts driving.

System disabled

The Driver Attention Warning system enters the ready status and displays the 'Disabled' screen in the following situations.

- The camera sensor is unable to detect the lanes.
- Driving speed remains under 64 km/h (40 mph) or over 177 km/h (110 mph).

System malfunction

OJF058429L

When the “Check System” warning message appears, the system is not working properly. In this situation, take your vehicle to an authorized Kia dealer and have the system checked.

⚠ WARNING

- **The Driver Attention Warning system is not a substitute for safe driving practices. It is the responsibility of the driver to always drive cautiously in order to react to unexpected and sudden situations. Pay attention to the road conditions at all times.**
- **A driver who feels fatigued should take a break even though there is no break suggestion by the Driver Attention Warning system.**

✻ NOTICE

It may suggest a break according to the driver’s driving pattern or habits even if the driver doesn’t feel fatigued.

✻ NOTICE

The Driver Attention Warning system utilizes the camera sensor on the front windshield for its operation. To keep the camera sensor in the best condition, you should observe the followings:

- **Do not disassemble the camera when installing tint on the windows or applying any type of coatings or accessories. If you disassemble a camera and assemble it again, take your vehicle to an authorized Kia dealer and have the system checked.**
- **Do not place any reflective objects (i.e. white paper, mirror) over the dashboard. Any light reflection may prevent the Driver Attention Warning (DAW) system from functioning.**
- **Use extreme caution to keep the camera sensor out of water.**
- **Do not disassemble the camera assembly, or apply any impact on the camera assembly.**

- **Playing the vehicle audio system at high volume may offset the Driver Attention Warning system warning sounds.**

⚠ CAUTION

The Driver Attention Warning system may not provide alerts in the following situations:

- ***The lane detection performance is limited. (For more information, refer to "Lane Keeping Assist (LKA) system" in this chapter.)***
- ***The vehicle is erratically driven or is abruptly turned for obstacle avoidance (e.g. construction area, other vehicles, fallen objects, bumpy road).***
- ***Forward drivability of the vehicle is severely undermined (possibly due to wide variation in tire pressures, uneven tire wear-out, toe-in/toe-out alignment).***

(Continued)

(Continued)

- ***The vehicle drives on a curvy road.***
- ***The vehicle drives on a bumpy road.***
- ***The vehicle drives through a windy area.***
- ***The vehicle is controlled by the following driver assistance systems:***
  - ***Lane Keeping Assist (LKA) system***
  - ***Forward collision-avoidance assist (FCA) System.***
  - ***Smart Cruise Control (SCC) System***

✻ NOTICE

The Driver Attention Warning system does not detect actual driver fatigue or drowsiness. The system monitors driving and provides a warning if it detects inattentive driving practices.

ECONOMICAL OPERATION

Your vehicle's fuel economy depends mainly on your style of driving, where you drive and when you drive.

Each of these factors affects how many miles (kilometers) you can get from a gallon (liter) of fuel. To operate your vehicle as economically as possible, use the following driving suggestions to help save money in both fuel and repairs:

- Drive smoothly. Accelerate at a moderate rate. Don't make "jack-rabbit" starts or full-throttle shifts and maintain a steady cruising speed. Don't race between stop-lights. Try to adjust your speed to the traffic so you don't have to change speeds unnecessarily. Avoid heavy traffic whenever possible. Always maintain a safe distance from other vehicles so you can avoid unnecessary braking. This also reduces brake wear.
- Drive at a moderate speed. The faster you drive, the more fuel your vehicle uses. Driving at a moderate speed, especially on the highway, is one of the most effective ways to reduce fuel consumption.
- Don't "ride" the brake pedal. This can increase fuel consumption and also increase wear on these components. In addition, driving with your foot resting on the brake pedal may cause the brakes to overheat, which reduces their effectiveness and may lead to more serious consequences.
- Take care of your tires. Keep them inflated to the recommended pressure. Incorrect inflation, either too much or too little, results in unnecessary tire wear. Check the tire pressures at least once a month.
- Be sure that the wheels are aligned correctly. Improper alignment can result from hitting curbs or driving too fast over irregular surfaces. Poor alignment causes faster tire wear and may also result in other problems as well as greater fuel consumption.
- Keep your vehicle in good condition. For better fuel economy and reduced maintenance costs, maintain your vehicle in accordance with the maintenance schedule in Chapter 7. If you drive your vehicle in severe conditions, more frequent maintenance is required (see Chapter 7 for details).
- Keep your vehicle clean. For maximum service, your vehicle should be kept clean and free of corrosive materials. It is especially important that mud, dirt, ice, etc. not be allowed to accumulate on the underside of the vehicle. This extra weight can result in increased fuel consumption and also contribute to corrosion.
- Travel lightly. Don't carry unnecessary weight in your vehicle. Weight reduces fuel economy.
- Don't let the engine idle longer than necessary. If you are waiting (and not in traffic), turn off your engine and restart only when you're ready to go.

- Remember, your vehicle does not require extended warm-up. After the engine has started, allow the engine to run for 10 to 20 seconds prior to placing the vehicle in gear. In very cold weather, however, give your engine a slightly longer warm-up period.
- Don't "lug" or "over-rev" the engine. Lugging is driving too slowly in a very high gear resulting in engine bucking. If this happens, shift to a lower gear. Over-revving is racing the engine beyond its safe limit. This can be avoided by shifting at the recommended speed.
- Use your air conditioning sparingly. The air conditioning system is operated by engine power so your fuel economy is reduced when you use it.
- Open windows at high speeds can reduce fuel economy.
- Fuel economy decreases in cross-winds and headwinds. To help off-set some of this loss, slow down when driving in these conditions.

Keeping a vehicle in good operating condition is important both for economy and safety. Therefore, have an authorized Kia dealer perform scheduled inspections and maintenance.

⚠ WARNING - Engine off during motion

Never turn the engine off to coast down hills or anytime the vehicle is in motion. The power steering and power brakes will not function properly without the engine running. In addition, turning off the ignition while driving could engage the steering wheel lock resulting in loss of vehicle steering. Keep the engine on and downshift to an appropriate gear for an engine braking effect.

SPECIAL DRIVING CONDITIONS

Hazardous driving conditions

When hazardous driving conditions are encountered such as water, snow, ice, mud, sand, or similar hazards, follow these suggestions:

- Drive cautiously and allow extra distance for braking.
- Avoid sudden braking or steering.
- When braking with non-ABS brakes, pump the brake pedal with a light up-and-down motion until the vehicle is stopped.

Do not pump the brake pedal on a vehicle equipped with ABS.

- If stalled in snow, mud, or sand, use the second gear. Accelerate slowly to avoid spinning the drive wheels.
- Use sand, rock salt, or other non-slip material under the drive wheels to provide traction when stalled in ice, snow, or mud.

⚠ WARNING - Downshifting

Do not downshift with an intelligent variable transmission while driving on slippery surfaces. The sudden change in tire speed could cause the tires to skid and result in an accident.

Rocking the vehicle

If it is necessary to rock the vehicle to free it from snow, sand, or mud, first turn the steering wheel right and left to clear the area around your front wheels. Then, shift back and forth between R (Reverse) and any forward gear in vehicles equipped with an Intelligent Variable Transmission / Dual clutch transmission. Do not race the engine, and spin the wheels as little as possible. If you are still stuck after a few tries, have the vehicle pulled out by a tow vehicle to avoid engine overheating and possible damage to the transmission.

⚠ WARNING - Sudden Vehicle Movement

Do not attempt to rock the vehicle if people or objects are nearby. The vehicle may suddenly move forward or backwards as it becomes unstuck.

⚠ **CAUTION - Vehicle rocking**

Prolonged rocking may cause engine overheating, transmission damage or failure, and tire damage.

⚠ **CAUTION - Spinning tires**

Do not spin the wheels, especially at speeds more than 56 km/h (35 mph). Spinning the wheels at high speeds when the vehicle is stationary could cause a tire to overheat which could result in tire damage that may injure bystanders.

The ESC system should be turned OFF prior to rocking the vehicle.

Smooth cornering

Avoid braking or gear changing in corners, especially when roads are wet. Ideally, corners should always be taken under gentle acceleration. If you follow these suggestions, tire wear will be held to a minimum.

Driving at night

Because night driving presents more hazards than driving in the daylight, here are some important tips to remember:

- Slow down and keep more distance between you and other vehicles, as it may be more difficult to see at night, especially in areas where there may not be any street lights.

- Adjust your mirrors to reduce the glare from other driver's headlights.
- Keep your headlights clean and properly aimed. (On vehicles not equipped with the automatic headlight aiming feature.) Dirty or improperly aimed headlights will make it much more difficult to see at night.
- Avoid staring directly at the headlights of oncoming vehicles. You could be temporarily blinded, and it will take several seconds for your eyes to readjust to the darkness.

Driving in the rain

OBD058045L

Rain and wet roads can make driving dangerous, especially if you're not prepared for the slick pavement. Here are a few things to consider when driving in the rain:

- A heavy rainfall will make it harder to see and will increase the distance needed to stop your vehicle, so slow down.
- Keep your windshield wiping equipment in good shape. Replace your windshield wiper blades when they show signs of streaking or missing areas on the windshield.
- If your tires are not in good condition, making a quick stop on wet pavement can cause a skid and possibly lead to an accident. Be sure your tires are in good shape.
- Turn on your headlights to make it easier for others to see you.
- Driving too fast through large puddles can affect your brakes. If you must go through puddles, try to drive through them slowly.
- If you believe you may have gotten your brakes wet, apply them lightly while driving until normal braking operation returns.

Driving in flooded areas

Avoid driving through flooded areas unless you are sure the water is no higher than the bottom of the wheel hub. Drive through any water slowly. Allow adequate stopping distance because brake performance may be affected.

After driving through water, dry the brakes by gently applying them several times while the vehicle is moving slowly.

Driving off-road

Drive carefully off-road because your vehicle may be damaged by rocks or roots of trees. Become familiar with the off-road conditions where you are going to drive before you begin driving.

Highway driving

Tires

Adjust the tire inflation pressures to specification. Low tire inflation pressures will result in overheating and possible failure of the tires.

Avoid using worn or damaged tires which may result in reduced traction or tire failure.

Never exceed the maximum tire inflation pressure shown on the tires.

⚠ WARNING - Under/over inflated tires

Always check the tires for proper inflation before driving. Underinflated or overinflated tires can cause poor handling, loss of vehicle control, and sudden tire failure leading to accidents, injuries, and even death. For proper tire pressures, refer to the "Tires and wheels" section in Chapter 8.

⚠ WARNING - Tire tread

Always check the tire tread before driving your vehicle. Worn-out tires can result in loss of vehicle control. Worn-out tires should be replaced as soon as possible. For further information and tread limits, refer to the "Tires and wheels" section in Chapter 7.

Fuel, engine coolant and engine oil

High speed travel consumes more fuel than urban motoring. Do not forget to check both the engine coolant and engine oil.

Drive belt

A loose or damaged drive belt may result in overheating of the engine.

WINTER DRIVING

Severe weather conditions in the winter result in greater wear and other problems. To minimize the problems of winter driving, you should follow these suggestions:

Snowy or icy conditions

To drive your vehicle in deep snow, it may be necessary to use snow tires on your tires. If snow tires are needed, it is necessary to select tires equivalent in size and type of the original equipment tires. Failure to do so may adversely affect the safety and handling of your vehicle. Furthermore, speeding, rapid acceleration, sudden brake applications, and sharp turns are potentially very hazardous practices.

During deceleration, use engine braking to the fullest extent. Sudden brake applications on snowy or icy roads may cause skids to occur. You need to keep sufficient distance between the vehicle in operation in front of your vehicle. Also, apply the brake gently.

Snow tires

If you mount snow tires on your vehicle, make sure they are radial tires of the same size and load range as the original tires. Mount snow tires on all four wheels to balance your vehicle's handling in all weather conditions. Keep in mind that the traction provided by snow tires on dry roads may not be as high as your vehicle's original equipment tires. You should drive cautiously even when the roads are clear. Check with the tire dealer for maximum speed recommendations.

Do not install studded tires without first checking local, state and municipal regulations for possible restrictions against their use.

⚠ WARNING - Snow tire size

Snow tires should be equivalent in size and type to the vehicle's standard tires. Otherwise, the safety and handling of your vehicle may be adversely affected.

Use high quality ethylene glycol coolant

Your vehicle is delivered with high quality ethylene glycol coolant in the cooling system. It is the only type of coolant that should be used because it helps prevent corrosion in the cooling system, lubricates the water pump and prevents freezing. Be sure to replace or replenish your coolant in accordance with the maintenance schedule in Chapte 7. Before winter, have your coolant tested to assure that its freezing point is sufficient for the temperatures anticipated during the winter.

Check battery and cables

Winter puts additional burdens on the battery system. Visually inspect the battery and cables as described in Chapte 7. The level of charge in your battery can be checked by an authorized Kia dealer or a service station.

Change to "winter weight" oil if necessary

In some climates, it is recommended that a lower viscosity "winter weight" oil be used during cold weather. See Chapte 8 for recommendations. If you aren't sure what weight oil you should use, consult an authorized Kia dealer.

Check spark plugs and ignition system

Inspect your spark plugs as described in Chapte 7 and replace them if necessary. Also check all ignition wiring and components to be sure they are not cracked, worn or damaged in any way.

To keep locks from freezing

To keep the locks from freezing, squirt an approved de-icer fluid or glycerine into the key opening. If a lock is covered with ice, squirt it with an approved de-icing fluid to remove the ice. If the lock is frozen internally, you may be able to thaw it out by using a heated key. Handle the heated key with care to avoid injury.

Use approved window washer anti-freeze in system

To keep the water in the window washer system from freezing, add an approved window washer anti-freeze solution in accordance with instructions on the container. Window washer anti-freeze is available from an authorized Kia dealer and most auto parts outlets. Do not use engine coolant or other types of anti-freeze as these may damage the paint finish.

Don’t let your parking brake freeze

Under some conditions, your parking brake can freeze in the engaged position. This is most likely to happen when there is an accumulation of snow or ice around or near the rear brakes or if the brakes are wet. If there is a risk the parking brake may freeze, apply it only temporarily while you put the gear shift lever in P (Park, Intelligent variable transmission / Dual clutch transmission) and chock the rear wheels so the vehicle cannot roll. Then release the parking brake.

Don't let ice and snow accumulate underneath

Under some conditions, snow and ice can build up under the fenders and interfere with the steering. When driving in severe winter conditions where this may happen, you should periodically check underneath the vehicle to be sure the movement of the front wheels and the steering components are not obstructed.

Carry emergency equipment

Depending on the severity of the weather, you should carry appropriate emergency equipment. Some of the items you may want to carry include tow straps or chains, flashlight, emergency flares, sand, shovel, jumper cables, window scraper, gloves, ground cloth, coveralls, blanket, etc.

TRAILER TOWING

We do not recommend using this vehicle for trailer towing.

VEHICLE LOAD LIMIT

Tire and loading information label

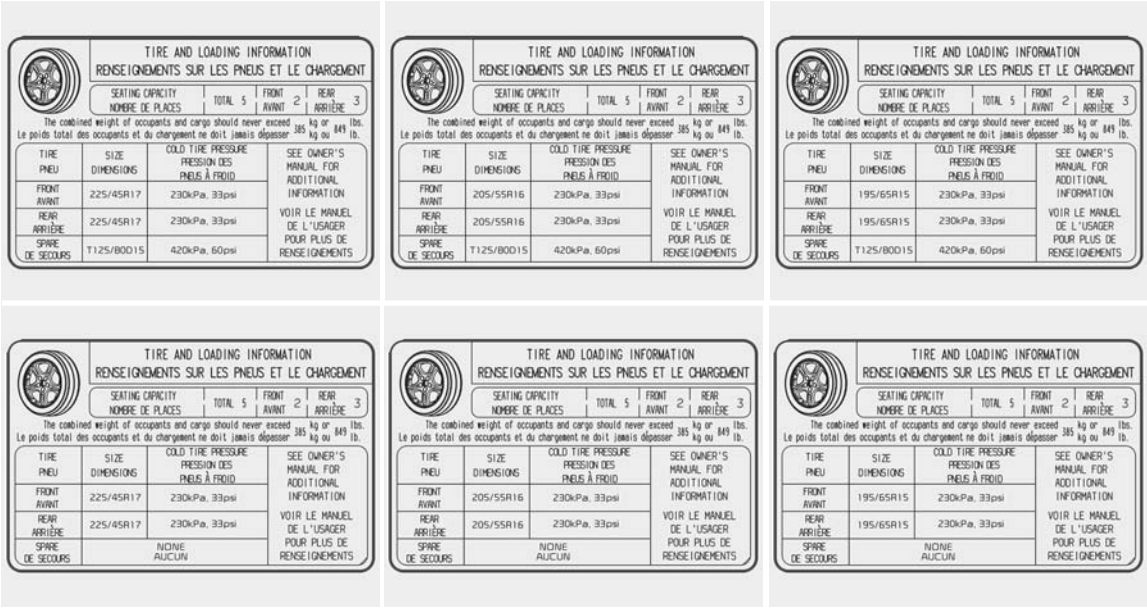

TIRE AND LOADING INFORMATION
RENSEIGNEMENTS SUR LES PNEUS ET LE CHARGEMENT

SEATING CAPACITY NOMBRE DE PLACES	TOTAL 5	FRONT AVANT 2	REAR ARRIÈRE 3

The combined weight of occupants and cargo should never exceed 385 kg or 849 lbs.
Le poids total des occupants et du chargement ne doit jamais dépasser 385 kg ou 849 lb.

TIRE PNEU	SIZE DIMENSIONS	COLD TIRE PRESSURE PRESSION DES PNEUS À FROID	SEE OWNER'S MANUAL FOR ADDITIONAL INFORMATION VOIR LE MANUEL DE L'USAGER POUR PLUS DE RENSEIGNEMENTS
FRONT AVANT	225/45R17	230kPa, 33psi	
REAR ARRIÈRE	225/45R17	230kPa, 33psi	
SPARE DE SECOURS	T125/80D15	420kPa, 60psi	

TIRE AND LOADING INFORMATION
RENSEIGNEMENTS SUR LES PNEUS ET LE CHARGEMENT

SEATING CAPACITY NOMBRE DE PLACES	TOTAL 5	FRONT AVANT 2	REAR ARRIÈRE 3

The combined weight of occupants and cargo should never exceed 385 kg or 849 lbs.
Le poids total des occupants et du chargement ne doit jamais dépasser 385 kg ou 849 lb.

TIRE PNEU	SIZE DIMENSIONS	COLD TIRE PRESSURE PRESSION DES PNEUS À FROID	SEE OWNER'S MANUAL FOR ADDITIONAL INFORMATION VOIR LE MANUEL DE L'USAGER POUR PLUS DE RENSEIGNEMENTS
FRONT AVANT	205/55R16	230kPa, 33psi	
REAR ARRIÈRE	205/55R16	230kPa, 33psi	
SPARE DE SECOURS	T125/80D15	420kPa, 60psi	

TIRE AND LOADING INFORMATION
RENSEIGNEMENTS SUR LES PNEUS ET LE CHARGEMENT

SEATING CAPACITY NOMBRE DE PLACES	TOTAL 5	FRONT AVANT 2	REAR ARRIÈRE 3

The combined weight of occupants and cargo should never exceed 385 kg or 849 lbs.
Le poids total des occupants et du chargement ne doit jamais dépasser 385 kg ou 849 lb.

TIRE PNEU	SIZE DIMENSIONS	COLD TIRE PRESSURE PRESSION DES PNEUS À FROID	SEE OWNER'S MANUAL FOR ADDITIONAL INFORMATION VOIR LE MANUEL DE L'USAGER POUR PLUS DE RENSEIGNEMENTS
FRONT AVANT	195/65R15	230kPa, 33psi	
REAR ARRIÈRE	195/65R15	230kPa, 33psi	
SPARE DE SECOURS	T125/80D15	420kPa, 60psi	

TIRE AND LOADING INFORMATION
RENSEIGNEMENTS SUR LES PNEUS ET LE CHARGEMENT

SEATING CAPACITY NOMBRE DE PLACES	TOTAL 5	FRONT AVANT 2	REAR ARRIÈRE 3

The combined weight of occupants and cargo should never exceed 385 kg or 849 lbs.
Le poids total des occupants et du chargement ne doit jamais dépasser 385 kg ou 849 lb.

TIRE PNEU	SIZE DIMENSIONS	COLD TIRE PRESSURE PRESSION DES PNEUS À FROID	SEE OWNER'S MANUAL FOR ADDITIONAL INFORMATION VOIR LE MANUEL DE L'USAGER POUR PLUS DE RENSEIGNEMENTS
FRONT AVANT	225/45R17	230kPa, 33psi	
REAR ARRIÈRE	225/45R17	230kPa, 33psi	
SPARE DE SECOURS	NONE AUCUN		

TIRE AND LOADING INFORMATION
RENSEIGNEMENTS SUR LES PNEUS ET LE CHARGEMENT

SEATING CAPACITY NOMBRE DE PLACES	TOTAL 5	FRONT AVANT 2	REAR ARRIÈRE 3

The combined weight of occupants and cargo should never exceed 385 kg or 849 lbs.
Le poids total des occupants et du chargement ne doit jamais dépasser 385 kg ou 849 lb.

TIRE PNEU	SIZE DIMENSIONS	COLD TIRE PRESSURE PRESSION DES PNEUS À FROID	SEE OWNER'S MANUAL FOR ADDITIONAL INFORMATION VOIR LE MANUEL DE L'USAGER POUR PLUS DE RENSEIGNEMENTS
FRONT AVANT	205/55R16	230kPa, 33psi	
REAR ARRIÈRE	205/55R16	230kPa, 33psi	
SPARE DE SECOURS	NONE AUCUN		

TIRE AND LOADING INFORMATION
RENSEIGNEMENTS SUR LES PNEUS ET LE CHARGEMENT

SEATING CAPACITY NOMBRE DE PLACES	TOTAL 5	FRONT AVANT 2	REAR ARRIÈRE 3

The combined weight of occupants and cargo should never exceed 385 kg or 849 lbs.
Le poids total des occupants et du chargement ne doit jamais dépasser 385 kg ou 849 lb.

TIRE PNEU	SIZE DIMENSIONS	COLD TIRE PRESSURE PRESSION DES PNEUS À FROID	SEE OWNER'S MANUAL FOR ADDITIONAL INFORMATION VOIR LE MANUEL DE L'USAGER POUR PLUS DE RENSEIGNEMENTS
FRONT AVANT	195/65R15	230kPa, 33psi	
REAR ARRIÈRE	195/65R15	230kPa, 33psi	
SPARE DE SECOURS	NONE AUCUN		

OBDM058121N/OBDM058124N/OBDM058122N/OBDM058125N/OBDM058123N/OBDM058126N

The label located on the driver's door sill gives the original tire size, cold tire pressures recommended for your vehicle, the number of people that can be in your vehicle and vehicle capacity weight.

Vehicle capacity weight:

410 kg (904 lbs.)

Vehicle capacity weight is the maximum combined weight of occupants and cargo.

Seating capacity:

Total : 5 persons
(Front seat : 2 persons,
Rear seat : 3 persons)

Seating capacity is the maximum number of occupants, including a driver, your vehicle may carry.

However, the seating capacity may be reduced based upon the weight of all of the occupants and the weight of the cargo being carried.

Do not overload the vehicle as there is a limit to the total weight, or load limit including occupants and cargo, the vehicle can carry.

Towing capacity:

We do not recommend using this vehicle for trailer towing.

Cargo capacity:

The cargo capacity of your vehicle will increase or decrease depending on the weight and the number of occupants.

Steps For Determining Correct Load Limit -

1. Locate the statement “The combined weight of occupants and cargo should never exceed XXX kg or XXX lbs.” on your vehicle's placard.
2. Determine the combined weight of the driver and passengers that will be riding in your vehicle.
3. Subtract the combined weight of the driver and passengers from XXX kg or XXX lbs.
4. The resulting figure equals the available amount of cargo and luggage load capacity. For example, if the "XXX" amount equals 635 kg (1400 lbs.) and there will be five 68 kg (150 lb) passengers in your vehicle, the amount of available cargo and luggage load capacity is 295 kg (650 lbs).

   (635-340 (5 x 68) = 295 kg or 1400-750 (5 x 150) = 650 lbs.)
5. Determine the combined weight of luggage and cargo being loaded on the vehicle. That weight may not safely exceed the available cargo and luggage load capacity calculated in Step 4.
6. If your vehicle will be towing a trailer, load from your trailer will be transferred to your vehicle. Consult this manual to determine how this reduces the available cargo and luggage load capacity of your vehicle.

⚠ WARNING - Loose cargo

Do not travel with unsecured blunt objects in the passenger compartment of your vehicle (e.g. suit cases or unsecured child seats). These items may strike occupants during a sudden stop or crash.

Example 1

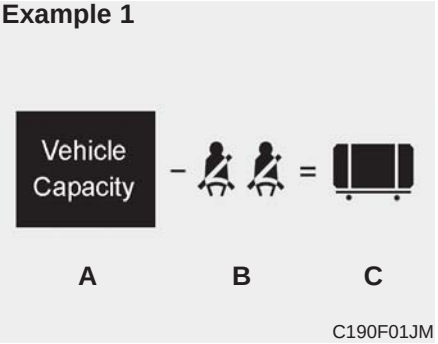

Item	Description	Total
A	Vehicle Capacity Weight	385 kg (849 lbs)
B	Subtract Occupant Weight 68 kg (150 lbs) × 2	136 kg (300 lbs)
C	Available Cargo and Luggage weight	249 kg (549 lbs)

Example 2

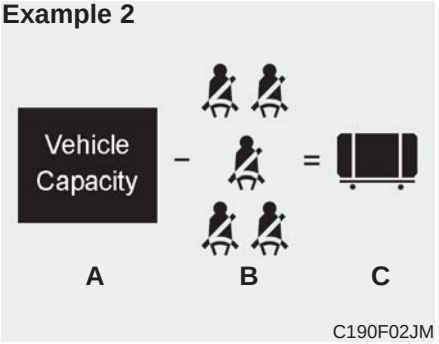

Item	Description	Total
A	Vehicle Capacity Weight	385 kg (849 lbs)
B	Subtract Occupant Weight 68 kg (150 lbs) × 5	340 kg (750 lbs)
C	Available Cargo and Luggage weight	45 kg (99 lbs)

Example 3

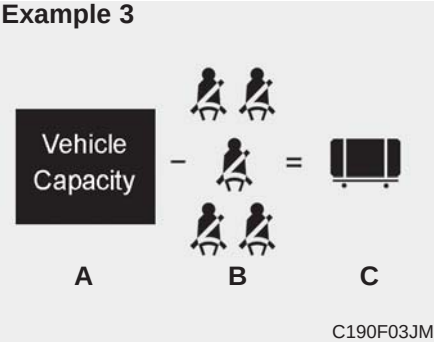

Item	Description	Total
A	Vehicle Capacity Weight	385 kg (849 lbs)
B	Subtract Occupant Weight 73 kg (161 lbs) × 5	365 kg (805 lbs)
C	Available Cargo and Luggage weight	20 kg (44 lbs)

Refer to your vehicle’s tire and loading information label for specific information about your vehicle's capacity weight and seating positions. The combined weight of the driver, passengers and cargo should never exceed your vehicle's capacity weight.

Certification label

The certification label is located on the driver's door sill at the center pillar.

This label shows the maximum allowable weight of the fully loaded vehicle. This is called the GVWR (Gross Vehicle Weight Rating). The GVWR includes the weight of the vehicle, all occupants, fuel and cargo.

This label also tells you the maximum weight that can be supported by the front and rear axles, called Gross Axle Weight Rating (GAWR).

To find out the actual loads on your front and rear axles, you need to go to a weigh station and weigh your vehicle. Your dealer can help you with this. Be sure to spread out your load equally on both sides of the centerline.

⚠ WARNING - Over loading

Never exceed the GVWR for your vehicle, the GAWR for either the front or rear axle and vehicle capacity weight. Exceeding these ratings can affect your vehicle's handling and braking ability.

The label will help you decide how much cargo and installed equipment your vehicle can carry.

If you carry items inside your vehicle - like suitcases, tools, packages, or anything else - they are moving as fast as the vehicle. If you have to stop or turn quickly, or if there is a crash, the items will keep going and can cause an injury if they strike the driver or a passenger.

⚠ WARNING - Over loading

Do not overload your vehicle. Overloading your vehicle can cause heat buildup in your vehicle's tires and possible tire failure, increased stopping distances and poor vehicle handling, all of which may result in a crash.

✻ NOTICE

Overloading your vehicle may cause damage. Repairs would not be covered by your warranty. Do not overload your vehicle.

VEHICLE WEIGHT

This chapter will guide you in the proper loading of your vehicle and how to keep your loaded vehicle weight within its design rating capability. Properly loading your vehicle will provide maximum return of the vehicle design performance. Before loading your vehicle, familiarize yourself with the following terms for determining your vehicle's weight ratings from the vehicle's specifications and the compliance label:

Base curb weight

This is the weight of the vehicle including a full tank of fuel and all standard equipment. It does not include passengers, cargo, or optional equipment.

Vehicle curb weight

This is the weight of your new vehicle when you picked it up from your dealer plus any aftermarket equipment.

Cargo weight

This figure includes all weight added to the Base Curb Weight, including cargo and optional equipment.

GAW (Gross axle weight)

This is the total weight placed on each axle (front and rear) - including vehicle curb weight and all payload.

GAWR (Gross axle weight rating)

This is the maximum allowable weight that can be carried by a single axle (front or rear). These numbers are shown on the compliance label. The total load on each axle must never exceed its GAWR.

GVW (Gross vehicle weight)

This is the Base Curb Weight plus actual Cargo Weight plus passengers.

GVWR (Gross vehicle weight rating)

This is the maximum allowable weight of the fully loaded vehicle (including all options, equipment, passengers and cargo). The GVWR is shown on the certification label located on the driver’s door sill.

What to do in an emergency

Road warning 6-2
- Hazard warning flasher 6-2

In case of an emergency while driving. 6-3
- If the engine stalls at a crossroad or crossing. 6-3
- If you have a flat tire while driving. 6-3
- If the engine stalls while driving 6-3

If the engine will not start 6-4
- If engine doesn't turn over or turns over slowly 6-4
- If engine turns over normally but does not start. . . . 6-4

Emergency starting 6-5
- Jump starting. 6-5
- Push-starting 6-6

If the engine overheats. 6-7

Tire Pressure Monitoring System (TPMS) 6-8
- Check tire pressure 6-8
- Low tire pressure telltale 6-10
- Low tire pressure position telltale 6-10
- Changing a tire with TPMS 6-12

If you have a flat tire 6-14
- Jack and tools 6-14
- Removing and storing the spare tire. 6-15
- Changing tires 6-15

If you have a flat tire (With Tire Mobility Kit). . 6-23
- Introduction 6-24
- Notes on the safe use of the Tire Mobility Kit 6-25
- Components of the Tire Mobility Kit (TMK). 6-26
- Components of the Tire Mobility Kit (TMK). 6-27
- Using the Tire Mobility Kit 6-28
- Distributing the sealant. 6-31
- Checking the tire inflation pressure 6-31
- Technical data 6-32

Towing 6-33
- Towing service 6-33
- Removable towing hook 6-35
- Emergency towing. 6-35

ROAD WARNING

Hazard warning flasher

The hazard warning flasher serves as a warning to other drivers to exercise extreme caution when approaching, overtaking, or passing your vehicle.

It should be used whenever emergency repairs are being made or when the vehicle is stopped near the edge of a roadway.

Press the flasher switch with the ignition switch in any position. The flasher switch is located in the center facia panel. All turn signal lights will flash simultaneously.

- The hazard warning flasher operates whether your vehicle is running or not.
- The turn signals do not work when the hazard flasher is on.
- Care must be taken when using the hazard warning flasher while the vehicle is being towed.

IN CASE OF AN EMERGENCY WHILE DRIVING

If the engine stalls at a crossroad or crossing

If the engine stalls at a crossroad or crossing, set the shift lever in the N (Neutral) position and then push the vehicle to a safe place.

If you have a flat tire while driving

If a tire goes flat while you are driving:

1. Take your foot off the accelerator pedal and let the vehicle slow down while driving straight ahead. Do not apply the brakes immediately or attempt to pull off the road as this may cause a loss of control. When the vehicle has slowed to such a speed that it is safe to do so, brake carefully and pull off the road. Drive off the road as far as possible and park on firm level ground. If you are on a divided highway, do not park in the median area between the two traffic lanes.
2. When the vehicle is stopped, turn on your emergency hazard flashers, set the parking brake and put the transmission in P (for Intelligent Variable Transmission) or in reverse (Manual Transmission).
3. Have all passengers get out of the vehicle. Be sure they all get out on the side of the vehicle that is away from traffic.
4. When changing a flat tire, follow the instruction provided later in this section.

If the engine stalls while driving

1. Reduce your speed gradually, keeping a straight line. Move cautiously off the road to a safe place.
2. Turn on your emergency flashers.
3. Try to start the engine again. If your vehicle will not start, contact an authorized Kia dealer or seek other qualified assistance.

✻ NOTICE

If there was a check engine light and loss of power or stall, and if safe to do so, wait at least 10 seconds to restart the vehicle after it stalls. This may reset the car so it will no longer run at low power (limp home) condition.

IF THE ENGINE WILL NOT START

If engine doesn't turn over or turns over slowly

1. If your vehicle has an Intelligent Variable Transmission, be sure the shift lever is in N (Neutral) or P (Park) and the emergency brake is set.
2. Check the battery connections to be sure they are clean and tight.
3. Turn on the interior light. If the light dims or goes out when you operate the starter, the battery is discharged.
4. Check the starter connections to be sure they are securely tightened.
5. Do not push or pull the vehicle to start it. See instructions for "Jump starting".

⚠ WARNING - Push/ pull start

Do not push or pull the vehicle to start it. Push or pull starting may cause the catalytic converter to overload and create a fire hazard.

If engine turns over normally but does not start

1. Check the fuel level.
2. With the ignition switch in the LOCK position, check all connectors at the ignition coils and spark plugs. Reconnect any that may be disconnected or loose.
3. Check the fuel line in the engine compartment.
4. If the engine still does not start, call an authorized Kia dealer or seek other qualified assistance.

EMERGENCY STARTING

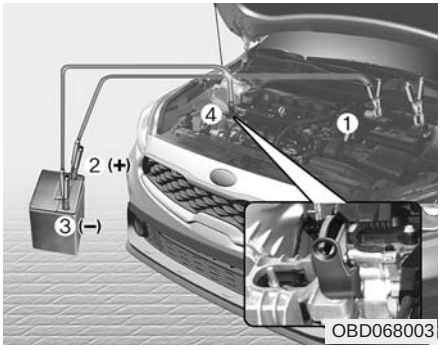

Connect cables in numerical order and disconnect in reverse order.

Jump starting

Jump starting can be dangerous if done incorrectly. Therefore, to avoid harm to yourself or damage to your vehicle or battery, follow these jump starting procedures. If in doubt, we strongly recommend that you have a competent technician or towing service jump start your vehicle.

⚠ CAUTION - Push/pull start to 12 Volt Battery

Use only a 12-volt jumper system. You can damage a 12-volt starting motor, ignition system, and other electrical parts beyond repair by use of a 24-volt power supply (either two 12-volt batteries in series or a 24-volt motor generator set).

⚠ WARNING - Battery

Never attempt to check the electrolyte level of the battery as this may cause the battery to rupture or explode.

⚠ WARNING - Frozen batteries

Do not attempt to jump start the vehicle if the discharged battery is frozen or if the electrolyte level is low, as the battery may rupture or explode.

⚠ WARNING - Battery

Keep all flames or sparks away from the battery. The battery produces hydrogen gas which will explode if exposed to flame or sparks.

⚠ WARNING - Sulfuric acid risk

When jump starting your vehicle, be careful not to get acid on yourself, your clothing or on the vehicle. Automobile batteries contain sulfuric acid. This is poisonous and highly corrosive.

Jump starting procedure

1. Make sure the booster battery is 12-volt and that its negative terminal is grounded.
2. If the booster battery is in another vehicle, do not allow the vehicles to come in contact.
3. Turn off all unnecessary electrical loads.
4. Connect the jumper cables in the exact sequence shown in the illustration. First connect one end of a jumper cable to the positive terminal of the discharged battery (1), then connect the other end to the positive terminal of the booster battery (2).

   Proceed to connect one end of the other jumper cable to the negative terminal of the booster battery (3), then the other end to a solid, stationary, metallic point (for example, the engine lifting bracket) away from the battery (4). Do not connect it to or near any part that moves when the engine is cranked.

   Do not allow the jumper cables to contact anything except the correct battery terminals or the correct ground. Do not lean over the battery when making connections.

⚠ WARNING - Battery cables

Do not connect the jumper cable from the negative terminal of the booster battery to the negative terminal of the discharged battery. This can cause the discharged battery to overheat and crack, releasing battery acid.

Make sure to connect one end of the jumper cable to the negative terminal of the booster battery, and the other end to a metallic point, far away from the battery.

5. Start the engine of the vehicle with the booster battery and let it run at 2,000 rpm, then start the engine of the vehicle with the discharged battery.

If the cause of your battery discharging is not apparent, you should have your vehicle checked by an authorized Kia dealer.

Push-starting

Your manual transmission-equipped vehicle should not be push-started because it might damage the emission control system.

Vehicles equipped with Dual clutch transmission/Intelligent variable transmission cannot be push-started.

Follow the directions in this section for jump-starting.

⚠ WARNING - Tow starting vehicle

Never tow a vehicle to start it.

When the engine starts, the vehicle can suddenly surge forward and could cause a collision with the tow vehicle.

IF THE ENGINE OVERHEATS

If your temperature gauge indicates overheating, you experience a loss of power, or hear loud pinging or knocking, the engine will probably be too hot. If this happens, you should:

1. Pull off the road and stop as soon as it is safe to do so.
2. Place the shift lever in P (for Dual clutch transmission/Intelligent Variable Transmission) or in Neutral for (Manual Transmission) and set the parking brake. If the air conditioning is on, turn it off.
3. If engine coolant is running out under the vehicle or steam is coming out from underneath the hood, stop the engine. Do not open the hood until the coolant has stopped running or the steaming has stopped. If there is no visible loss of engine coolant and no steam, leave the engine running and check to be sure the engine cooling fan is operating. If the fan is not running, turn the engine off.
4. Check to see if the water pump drive belt is missing. If it is not missing, check to see that it is tight. If the drive belt seems to be satisfactory, check for coolant leaking from the radiator, hoses or under the vehicle. (If the air conditioning had been in use, it is normal for cold water to be draining from it when you stop).

⚠ WARNING - Under the hood

While the engine is running, keep hair, hands and clothing away from moving parts such as the fan and drive belts to prevent injury.

5. If the water pump drive belt is broken or engine coolant is leaking out, stop the engine immediately and call the nearest authorized Kia dealer for assistance.

⚠ WARNING - Radiator cap

Do not remove the radiator cap when the engine is hot. This may result in coolant being blown out of the opening and cause serious burns.

6. If you cannot find the cause of the overheating, wait until the engine temperature has returned to normal. If coolant has been lost, carefully add coolant to the reservoir to bring the fluid level in the reservoir up to the halfway mark.
7. Proceed with caution, keeping alert for further signs of overheating. If overheating happens again, call an authorized Kia dealer for assistance.

Serious loss of coolant indicates there is a leak in the cooling system and this should be checked as soon as possible by an authorized Kia dealer.

TIRE PRESSURE MONITORING SYSTEM (TPMS)

OBDM068005N

OBDM068034

(1) Low tire pressure indicator/ TPMS malfunction indicator

(2) Low tire pressure position telltale* (Shown on the LCD display)

* : if equipped

Check tire pressure

OBDM068036

- You can check the tire pressure in the information mode on the cluster.
  - Refer to “User settings mode” in chapter 4.
- Tire pressure is displayed 1~2 minutes after driving.
- If tire pressure is not displayed when the vehicle is stopped, “Drive to display” message displays. After driving, check the tire pressure.
- You can change the tire pressure unit in the user settings mode on the cluster.
  - psi, kpa, bar (Refer to “User settings mode” in chapter 4).

✻ NOTICE

- **The tire pressure may change due to factors such as parking condition, driving style, and altitude above sea level.**
- **The tire pressure shown on the dashboard may differ from the tire pressure measured by a tire pressure gauge.**
- **Low tire pressure warning may sound when a tire’s pressure unit is equal or lower than nearby tires. This is a normal occurrence, which is due to the change in tire pressure along with tire temperature.**

Each tire, including the spare (if provided), should be checked monthly when cold and inflated to the inflation pressure recommended by the vehicle manufacturer on the vehicle placard or tire inflation pressure label. (If your vehicle has tires of a different size than the size indicated on the vehicle placard or tire inflation pressure label, you should determine the proper tire inflation pressure for those tires.)

As an added safety feature, your vehicle has been equipped with a tire pressure monitoring system (TPMS) that illuminates a low tire pressure indicator when one or more of your tires is significantly under-inflated. Accordingly, when the low tire pressure telltale illuminates, you should stop and check your tires as soon as possible, and inflate them to the proper pressure. Driving on a significantly under-inflated tire causes the tire to overheat and can lead to tire failure. Under-inflation also reduces fuel efficiency and tire tread life, and may affect the vehicle's handling and stopping ability.

Please note that the TPMS is not a substitute for proper tire maintenance, and it is the driver's responsibility to maintain correct tire pressure, even if under-inflation has not reached the level to trigger illumination of the TPMS low tire pressure telltale.

Your vehicle has also been equipped with a TPMS malfunction indicator to indicate when the system is not operating properly. The TPMS malfunction indicator is combined with the low tire pressure telltale. When the system detects a malfunction, the telltale will flash for approximately one minute and then remain continuously illuminated. This sequence will continue upon subsequent vehicle start-ups as long as the malfunction exists. When the malfunction indicator is illuminated, the system may not be able to detect or signal low tire pressure as intended. TPMS malfunctions may occur for a variety of reasons, including the installation of replacement or alternate tires or wheels on the vehicle that prevent the TPMS from functioning properly.

Always check the TPMS malfunction telltale after replacing one or more tires or wheels on your vehicle to ensure that the replacement or alternate tires and wheels allow the TPMS to continue to function properly.

✻ NOTICE

If the TPMS, Low Tire Pressure indicator does not illuminate for 3 seconds when the ignition switch is turned to the ON position, or if it they remain illuminated after coming on for approximately 3 seconds, take your vehicle to your nearest authorized Kia dealer and have the system checked.

Low tire pressure telltale

Low tire pressure position telltale

OBDM068035

When the tire pressure monitoring system warning indicators are illuminated, one or more of your tires is significantly under-inflated.

If the telltale illuminates, immediately reduce your speed, avoid hard cornering and anticipate increased stopping distances. You should stop and check your tires as soon as possible.

Inflate the tires to the proper pressure as indicated on the vehicle's placard or tire inflation pressure label located on the driver's side center pillar outer panel. If you cannot reach a service station or if the tire cannot hold the newly added air, replace the low pressure tire with the spare tire.

Then the TPMS malfunction indicator and the Low Tire Pressure telltale may turn on and illuminate after restarting and for about 20 minutes of continuous driving before you have the low pressure tire repaired and replaced on the vehicle.

In winter or cold weather, the low tire pressure telltale may be illuminated if the tire pressure was adjusted to the recommended tire inflation pressure in warm weather. It does not mean your TPMS is malfunctioning because the decreased temperature leads to a proportional lowering of tire pressure.

When you drive your vehicle from a warm area to a cold area or from a cold area to a warm area, or the outside temperature is significantly higher or lower, you should check the tire inflation pressure and adjust the tires to the recommended tire inflation pressure.

When filling tires with more air, conditions to turn off the low tire pressure telltale may not be met. This is because a tire inflator has a margin of error in performance. The low tire pressure telltale will be turned off if the tire pressure is above the recommended tire inflation pressure.

⚠ WARNING - Low pressure damage

Do not drive on low pressure tires. Significantly low tire pressure can cause the tires to overheat and fail making the vehicle unstable resulting in increased braking distances and a loss of vehicle control.

TPMS (Tire Pressure Monitoring System) malfunction indicator

The low tire pressure telltale will illuminate after it blinks for approximately one minute when there is a problem with the Tire Pressure Monitoring System. If the system is able to correctly detect an underinflation warning at the same time as system failure then it will illuminate both the TPMS malfunction and low tire pressure position telltales e.g. if Front Left sensor fails, the TPMS malfunction indicator illuminates, but if the Front Right, Rear Left, or Rear Right tire is under-inflated, the low tire pressure position telltales may illuminate together with the TPMS malfunction indicator.

Have the system checked by an authorized Kia dealer as soon as possible to determine the cause of the problem.

- The TPMS malfunction indicator may be illuminated if the vehicle is moving around electric power supply cables or radios transmitters such as at police stations, government and public offices, broadcasting stations, military installations, airports, or transmitting towers, etc. This can interfere with normal operation of the Tire Pressure Monitoring System (TPMS).
- The TPMS malfunction indicator may be illuminated if snow chains are used or some separate electronic devices such as notebook computer, mobile charger, remote starter or navigation etc., are used in the vehicle. This can interfere with normal operation of the Tire Pressure Monitoring System (TPMS).

Changing a tire with TPMS

If you have a flat tire, the Low Tire Pressure telltale will come on. Have the flat tire repaired by an authorized Kia dealer as soon as possible or replace the flat tire with the spare tire.

⚠ **CAUTION - Repair Agents**

Never use a puncture-repairing agent not approved by Kia to repair and/or inflate a low pressure tire. A sealant not approved by Kia may damage the tire pressure sensor.

Each wheel is equipped with a tire pressure sensor mounted inside the tire behind the valve stem. You must use TPMS specific wheels. It is recommended that you always have your tires serviced by an authorized Kia dealer.

Even if you replace the low pressure tire with the spare tire, the Low Tire Pressure telltale will remain on until the low pressure tire is repaired and placed on the vehicle.

After you replace the low pressure tire with the spare tire, the TPMS malfunction indicator may illuminate after a few minutes because the TPMS sensor mounted on the spare wheel is not initiated.

Once the low pressure tire is inflated again to the recommended pressure and installed on the vehicle, or the TPMS sensor mounted on the replaced spare wheel is initiated by an authorized Kia dealer, the TPMS malfunction indicator and the low tire pressure telltale will turn off within a few minutes of driving.

If the indicator has not disappeared after a few minutes of driving, please visit an authorized Kia dealer.

If an original mounted tire is replaced with the spare tire, the TPMS sensor on the replaced spare wheel should be initiated and the TPMS sensor on the original mounted wheel should be deactivated. If the TPMS sensor on the original mounted wheel located in the spare tire carrier still activates, the tire pressure monitoring system may not operate properly. Have the tire with TPMS serviced or replaced by an authorized Kia dealer.

You may not be able to identify a low tire by simply looking at it. Always use a good quality tire pressure gauge to measure the tire's inflation pressure. Please note that a tire that is hot (from being driven) will have a higher pressure measurement than a tire that is cold (from sitting stationary for at least 3 hours and driven less than 1.6 km (1 mile) during that 3 hour period).

Allow the tire to cool before measuring the inflation pressure. Always be sure the tire is cold before inflating to the recommended pressure.

A cold tire means the vehicle has been sitting for 3 hours and driven for less than 1.6 km (1 mile) in that 3 hour period.

Never use tire sealant if your vehicle is equipped with a Tire Pressure Monitoring System. A liquid sealant not approved by Kia may damage the tire pressure sensors.

- The TPMS cannot alert you to severe and sudden tire damage caused by external factors such as nails or road debris.
- If you feel any vehicle instability, immediately take your foot off the accelerator, apply the brakes gradually and with light force, and slowly move to a safe position off the road.

✻ NOTICE - Protecting TPMS

Tampering with, modifying, or disabling the Tire Pressure Monitoring System (TPMS) components may interfere with the system's ability to warn the driver of low tire pressure conditions and/or TPMS malfunctions. Tampering with, modifying, or disabling the Tire Pressure Monitoring System (TPMS) components may void the warranty for that portion of the vehicle.

This device complies with Industry Canada licence-exempt RSS standard(s).

Operation is subject to the following two conditions:

(1) This device may not cause interference, and

(2) This device must accept any interference, including interference that may cause undesired operation of the device.

IF YOU HAVE A FLAT TIRE

Jack and tools (if equipped)

The jack and wheel lug nut wrench are stored in the luggage compartment.

Remove the panel indicated in the illustration.

(1) Jack handle

(2) Jack

(3) Wheel lug nut wrench

Jacking instructions

The jack is provided for emergency tire changing only.

To prevent the jack from “rattling” while the vehicle is in motion, store it properly.

Follow jacking instructions to reduce the possibility of personal injury.

⚠ WARNING - Tire Jack

Do not place any portion of your body under a vehicle that is only supported by a jack since the vehicle can easily roll off the jack. Use vehicle support stands.

⚠ WARNING - Changing tires

Never attempt vehicle repairs in the traffic lanes of a public road or highway.

- Always move the vehicle completely off the road and onto the shoulder before trying to change a tire. The jack should be used on firm level ground. If you cannot find a firm, level place off the road, call a towing service company for assistance.
- Be sure to use the correct front and rear jacking positions on the vehicle; never use the bumpers or any other part of the vehicle for jack support.
- Do not allow anyone to remain in the vehicle while it is on the jack.
- Make sure any children present are in a secure place away from the road and from the vehicle to be raised with the jack.

⚠ WARNING - Running vehicle on jack

Do not start or run the engine of the vehicle while the vehicle is on the jack as this may cause the vehicle to fall off the jack.

Removing and storing the spare tire (if equipped)

OBD068033L

Turn the tire hold-down wing bolt counterclockwise to remove.

Store the tire in the reverse order of removal.

To prevent the spare tire and tools from “rattling” while the vehicle is in motion, store them properly.

OBDM069061N

If it is hard to loosen the tire hold down wing bolt by hand, you can loosen it easily using the jack handle.1. Put the jack handle (1) inside of the tire hold-down wing bolt.2. Turn the tire hold-down wing bolt counterclockwise with the jack handle.

⚠ WARNING

- Touching surface of the luggage room floor

Do not touch the metal surface of the luggage room floor while the engine is operating or hot. Doing so could result in serious bodily injury.

Turn the engine off and wait until it cools down or wear globes to remove the spare tire from the luggage room.

Changing tires (if equipped)

1. Park on a level surface and apply the parking brake firmly.
2. Place the transmission shift lever in P (Park) with Dual clutch transmission/Intelligent variable transmission and R (Reverse) with manual transmission.
3. Activate the hazard warning flashers.

4. Remove the wheel lug nut wrench, jack and spare tire from the vehicle.
5. Chock both the front and rear of the wheel that is diagonally opposite from the jack position.

⚠ WARNING - Jack location

To reduce the possibility of injury, be sure to use only the jack provided with the vehicle in the correct jack position; never use any other part of the vehicle for jack support.

⚠ WARNING - Changing a tire

- **To prevent vehicle movement while changing a tire, always set the parking brake fully, and always chock the wheel diagonally opposite the wheel being changed.**
- **We recommend that the wheels of the vehicle be chocked, and that no person remain in a vehicle that is being jacked.**

OBD068026L

6. Loosen the wheel lug nuts counterclockwise one turn each, but do not remove any nut until the tire has been raised off the ground.

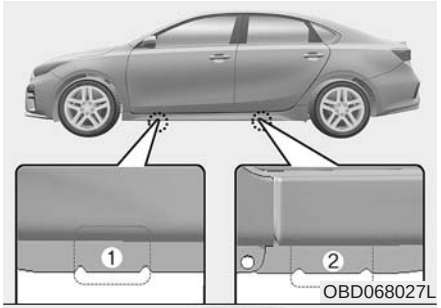

OBD068027L

OBD068028L

7. Place the jack at the front (1) or rear (2) jacking position closest to the tire you are changing. Place the jack at the designated locations under the frame. The jacking positions are plates welded to the frame with two tabs and a raised dot to line up with the jack.

OBD068029L

8. Insert the wheel lug nut wrench into the jack and turn it clockwise, raising the vehicle until the tire just clears the ground. This measurement is approximately 30 mm (1 in.).

   Before removing the wheel lug nuts, make sure the vehicle is stable and that there is no chance for movement or slippage.

9. Loosen the wheel nuts and remove them with your fingers. Slide the wheel off the studs and lay it flat so it cannot roll away. To put the wheel on the hub, pick up the spare tire, line up the holes with the studs and slide the wheel onto them. If this is difficult, tip the wheel slightly and get the top hole in the wheel lined up with the top stud. Jiggle the wheel back and forth until the wheel can slide over the other studs.

Wheels may have sharp edges. Handle them carefully to avoid possible severe injury. Before putting the wheel into place, be sure that there is nothing on the hub or wheel (such as mud, tar, gravel, etc.) that prevents the wheel from fitting solidly against the hub.

⚠ WARNING - Installing a wheel

Make sure the wheel makes good contact with the hub when installed. If the contact of the mounting surface between the wheel and hub is not good, the wheel nuts could come loose and cause the loss of a wheel. Loss of a wheel may result in loss of control of the vehicle.

10. To install the wheel, hold it on the studs, put the wheel nuts on the studs and tighten them finger tight. Jiggle the tire to be sure it is completely seated, then tighten the nuts as much as possible with your fingers again.
11. Insert the wrench into the jack and lower the vehicle to the ground by turning the wheel nut wrench counterclockwise.

OBD068030L

Position the wrench as shown in the drawing and tighten the wheel nuts. Be sure the socket is seated completely over the nut. Do not stand on the wrench handle or use an extension pipe over the wrench handle. Go around the wheel, tightening every nut following the numerical sequence shown in the image until they are all tight. Double-check each nut for tightness. After changing wheels, have an authorized Kia dealer tighten the wheel nuts to their proper torque as soon as possible.

Wheel nut tightening torque:

11~13 kgf·m (79~94 lbf·ft)

If you have a tire gauge, remove the valve cap and check the air pressure. If the pressure is lower than recommended, drive slowly to the nearest service station and inflate to the correct pressure. If it is too high, adjust it until it is correct. Always reinstall the valve cap after checking or adjusting the tire pressure. If the cap is not replaced, dust and dirt may get into the tire valve and air may leak from the tire. If you lose a valve cap, buy another and install it as soon as possible.

After you have changed the wheels, always secure the flat tire in its place and return the jack and tools to their proper storage locations.

⚠ **CAUTION - Reusing lug nuts**

Make certain during wheel removal that the same nuts that were removed are reinstalled - or, if replaced, that nuts with metric threads and the same chamfer configuration are used. Your vehicle has metric threads on the wheel studs and nuts. Installation of a non-metric thread nut on a metric stud will not secure the wheel to the hub properly and will damage the stud so that it must be replaced.

Note that most lug nuts do not have metric threads. Be sure to use extreme care in checking for thread style before installing aftermarket lug nuts or wheels. If in doubt, consult an authorized Kia dealer.

⚠ WARNING - Wheel studs

If the studs are damaged, they may lose their ability to retain the wheel. This could lead to the loss of the wheel and a collision resulting in serious injuries.

To prevent the jack, wheel lug nut wrench and spare tire from rattling while the vehicle is in motion, store them properly.

Check the inflation pressures as soon as possible after installing the spare tire. Adjust it to the specified pressure, if necessary. Refer to the "Tires and Wheels" section in Chapter 8.

Important - use of compact spare tire

Your vehicle is equipped with a compact spare tire. This compact spare tire takes up less space than a regular-size tire. This tire is smaller than a conventional tire and is designed for temporary use only.

- You should drive carefully when the compact spare is in use. The compact spare should be replaced by the proper conventional tire and rim at the first opportunity.
- The operation of this vehicle is not recommended with more than one compact spare tire in use at the same time.

⚠ WARNING - Spare tire

The compact spare tire is for emergency use only. Do not operate your vehicle on this compact spare at speeds over 80 km/h (50 mph). The original tire should be repaired or replaced as soon as possible to avoid failure of the spare, possibly leading to personal injury or death.

The compact spare should be inflated to 420 kPa (60 psi).

✻ NOTICE

Check the inflation pressure after installing the spare tire. Adjust it to the specified pressure, as necessary.

When using a compact spare tire, observe the following precautions:

- Under no circumstances should you exceed 80 km/h (50 mph); a higher speed could damage the tire.
- Ensure that you drive slowly enough for the road conditions to avoid all hazards. Any road hazard, such as a pothole or debris, could seriously damage the compact spare.
- Any continuous road use of this tire could result in tire failure, loss of vehicle control, and possible personal injury.
- Do not exceed the vehicle's maximum load rating or the load-carrying capacity shown on the sidewall of the compact spare tire.
- Avoid driving over obstacles. The compact spare tire diameter is smaller than the diameter of a conventional tire and reduces the ground clearance approximately 25 mm (1 inch), which could result in damage to the vehicle.
- Do not take this vehicle through an automatic vehicle wash while the compact spare tire is installed.
- Do not use the compact spare tire on any other vehicle because this tire has been designed especially for your vehicle.
- The compact spare tire's tread life is shorter than a regular tire. Inspect your compact spare tire regularly and replace worn compact spare tires with the same size and design, mounted on the same wheel.
- The compact spare tire should not be used on any other wheels, nor should standard tires, snow tires, wheel covers or trim rings be used with the compact spare wheel. If such use is attempted, damage to these items or other vehicle components may occur.
- Do not use more than one compact spare tire at a time.
- Do not tow a trailer while the compact spare tire is installed.

Jack label

■ Example

• Type A

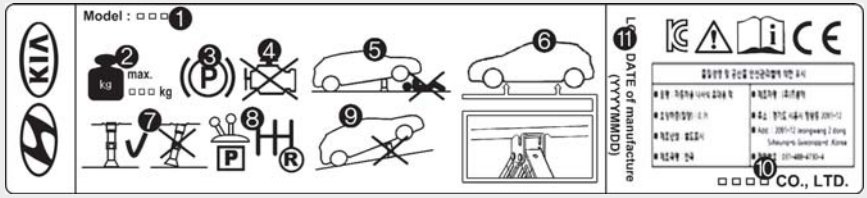

OHYK064001

• Type B

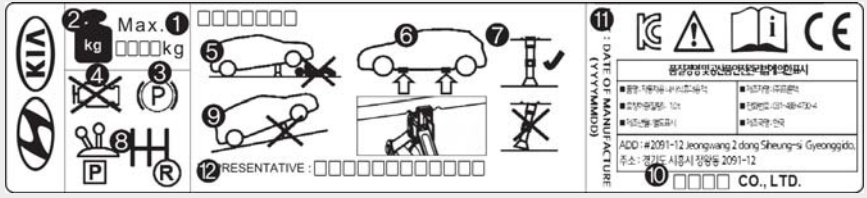

OHYK064005

• Type C

OHYK064002

❊ The actual Jack label in the vehicle may differ from the illustration. For more detailed specifications, refer to the label attached to the jack.

1. Model Name
2. Maximum allowable load
3. When using the jack, set your parking brake.
4. When using the jack, stop the engine.
5. Do not get under a vehicle that is supported by a jack.
6. The designated locations under the frame
7. When supporting the vehicle, the base plate of the jack must be vertical under the lifting point.
8. Move the shift lever to the P position on vehicles with intelligent variable transmission.
9. The jack should be used on firm level ground.
10. Jack manufacturer
11. Production date
12. Representative company and address

IF YOU HAVE A FLAT TIRE (WITH TIRE MOBILITY KIT, IF EQUIPPED)

Please read the instructions before using the Tire Mobility Kit.

(1) Compressor

(2) Sealant bottle

The Tire Mobility Kit is a temporary fix to the tire and the tire should be inspected by an authorized Kia dealer as soon as possible.

⚠ CAUTION - One sealant for one tire

When two or more tires are flat, do not use the Tire Mobility Kit because the canister of sealant only contains enough sealant for one flat tire.

⚠ WARNING - Tire wall

Do not use the Tire Mobility Kit to repair large punctures or damage to the tire sidewalls. In these situations, the tire cannot be sealed completely and air will leak from the tire. This can result in tire failure.

⚠ WARNING - Speed with temporary fix

Do not exceed a speed of 80 km/h (50 mph) when driving with a tire sealed with the Tire Mobility Kit. While driving, if you experience any unusual vibration, ride disturbance or noise, reduce your speed and drive with caution until you can safely pull off the side of the road.

⚠ WARNING - Temporary fix

Have your tire repaired as soon as possible. The tire may lose air pressure at any time after inflating with the Tire Mobility Kit.

⚠ CAUTION

When reinstalling the repaired or replaced tire and wheel on the vehicle, tighten the wheel lug nut to 11~13kgf·m (79~94 lbf·ft).

Introduction

OBD068007

With the Tire Mobility Kit (TMK) you stay mobile even after experiencing a tire puncture.

The system compressor and sealing compound effectively seal most punctures in a passenger car tire caused by nails or similar objects and reinflates the tire.

After you ensure that the tire is properly sealed, you can drive cautiously on the tire at a max. speed of 80 km/h (50 mph) in order to reach a vehicle or tire dealer to have the tire replaced as soon as possible.

It is possible that some tires, especially with larger punctures or damage to the sidewall, cannot be sealed completely.

Air pressure loss in the tire may adversely affect tire performance.

For this reason, you should avoid abrupt steering or other driving maneuvers, especially if the vehicle is heavily loaded or if a trailer is in use.

The Tire Mobility Kit is not designed or intended as a permanent tire repair method and is to be used for one tire only.

This instruction shows you step by step how to temporarily seal the puncture.

Read the section "Notes on the safe use of the Tire Mobility Kit".

Notes on the safe use of the Tire Mobility Kit

- Park your car at the side of the road so that you can work with the Tire Mobility Kit away from moving traffic.
- To be sure your vehicle will not move, even when you're on fairly level ground, always set your parking brake.
- Only use the Tire Mobility Kit for sealing/inflation passenger car tires. Only punctured areas located within the tread region of the tire can be sealed using the Tire Mobility Kit.
- Do not use on motorcycles, bicycles or any other type of tires.
- When the tire and wheel are damaged, do not use Tire Mobility Kit for your safety.
- Use of the Tire Mobility Kit may not be effective for tire damage larger than approximately 6 mm (0.24 in).

  Please contact the nearest Kia dealership if the tire cannot be made roadworthy with the Tire Mobility Kit.
- Do not remove any foreign objects such as nails or screws that have penetrated the tire.
- Provided the car is outdoors, leave the engine running. Otherwise operating the compressor may eventually drain the car battery.
- Never leave the Tire Mobility Kit unattended while it is being used.
- Do not leave the compressor running for more than 10 min. at a time or it may overheat.
- Do not use the Tire Mobility Kit if the ambient temperature is below -30°C (-22°F).

⚠ WARNING

- **If sealant comes into contact with skin, wash the affected areas thoroughly. Seek medical attention if irritation develops and persists.**
- **If sealant comes into contact with the eyes, flush eyes with water for at least 15 minutes. Seek medical attention if irritation persists.**
- **If sealant is swallowed, call a physician or poison control center immediately.**

⚠ WARNING

Do not use the Tire Mobility Kit if a tire is severely damaged.

Components of the Tire Mobility Kit (TMK)

■ For 15/16 inch tire

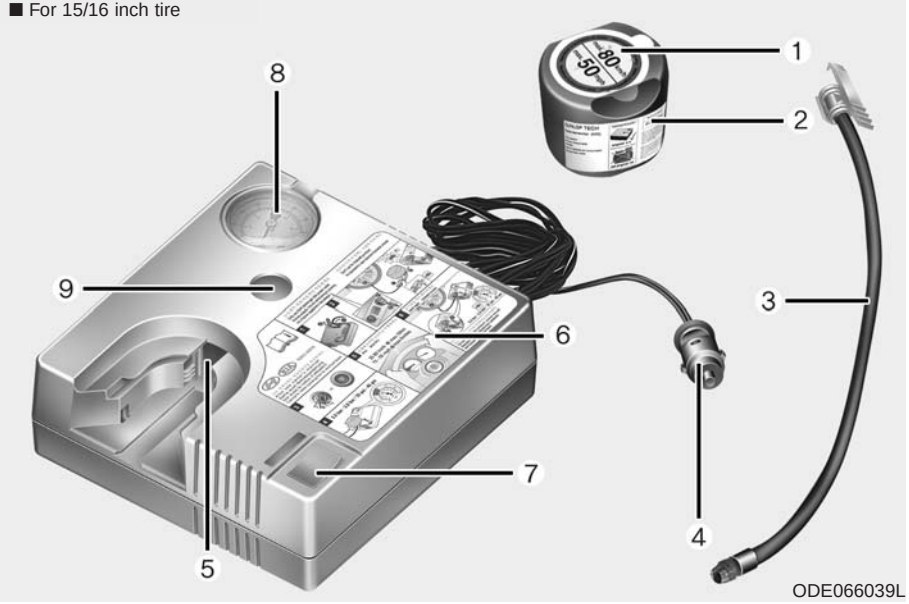

1. Speed restriction label
2. Sealant bottle and label with speed restriction
3. Filling sealant and air hose from sealant bottle to wheel
4. Connectors and cable for the power outlet direct connection
5. Holder for the sealant bottle
6. Compressor
7. On/off switch
8. Pressure gauge for displaying the tire inflation pressure
9. Tire Pressure Control Release Button

Connectors and cable are stored in the compressor housing.

⚠ WARNING - Expired sealant

Do not use the Tire sealant after the sealant has expired (i.e. after the expiration date on the sealant container). This can increase the risk of tire failure.

⚠ WARNING - Sealant

- **Keep out of reach of children.**
- **Avoid contact with eyes.**
- **Do not swallow.**

✻ NOTICE

The sealant container and insert hose (3) cannot be reused.

Components of the Tire Mobility Kit (TMK)

■ For 17/18 inch tire

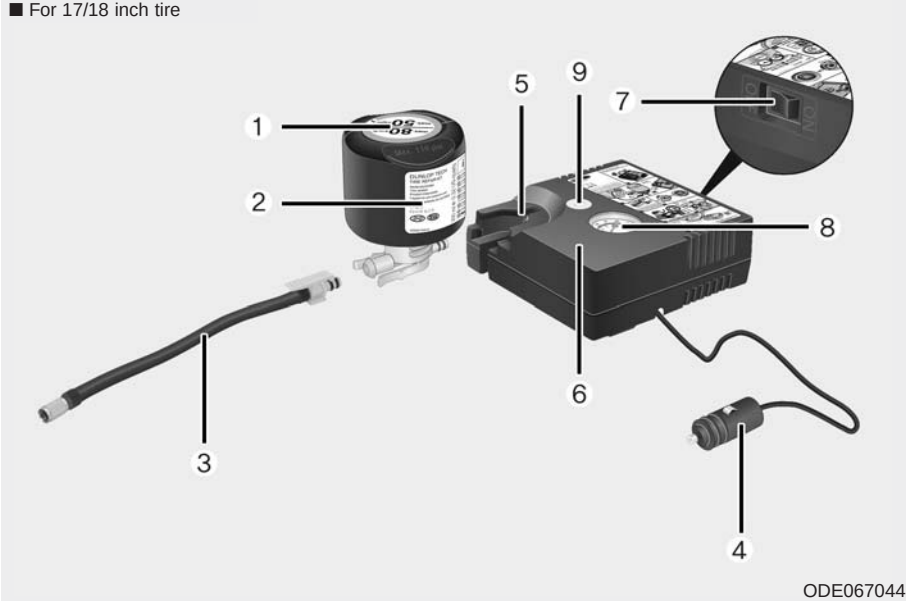

ODE067044

1. Speed restriction label
2. Sealant bottle and label with speed restriction
3. Filling sealant and air hose from sealant bottle to wheel
4. Connectors and cable for the power outlet direct connection
5. Holder for the sealant bottle
6. Compressor
7. On/off switch
8. Pressure gauge for displaying the tire inflation pressure
9. Tire Pressure Control Release Button

Connectors and cable are stored in the compressor housing.

⚠ WARNING - Expired sealant

Do not use the Tire sealant after the sealant has expired (i.e. after the expiration date on the sealant container). This can increase the risk of tire failure.

⚠ WARNING - Sealant

- **Keep out of reach of children.**
- **Avoid contact with eyes.**
- **Do not swallow.**

✻ NOTICE

The sealant container and insert hose (3) cannot be reused.

Using the Tire Mobility Kit

1. Detach the speed restriction label (1) from the sealant bottle (2), and place it in a highly visible place inside the vehicle such as on the steering wheel to remind the driver not to drive too fast.
2. Filling the sealant: Strictly follow the specified sequence, otherwise the sealant may escape under high pressure.

OBD068008

⚠ CAUTION

Before using the tire repair kit, please read the instructions attached on the sealant case carefully. Detach the speed limit label on the sealant case and put it in a highly visible place. Always drive within the speed limit.

ODEP067048

3. Shake the sealant bottle.

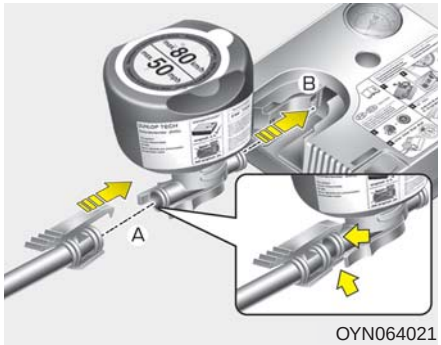

OYN064021

4. Screw the filling hose (a) onto the connector of the sealant bottle (1).
5. Insert the sealant bottle into the housing(b) of the compressor so that the bottle is upright.
6. Ensure that the button (9) on the compressor is not pressed.

OBD068010

7. Unscrew the valve cap from the valve of the defective wheel and screw filling hose (3) of the sealant bottle onto the valve.

OBD068021

✻ NOTICE

If the sealant is injected when the tire air pressure injection valve and sealant injection hose are not fully interlocked, the sealant may overflow and clog the valve.

8. Connect the compressor to the vehicle power outlet using the cable and connectors (4).

✻ NOTICE

Only use the front passenger side power outlet.

9. With the engine start/stop button position on: switch on the compressor and let it run for approximately 5~7 minutes to fill the sealant up to proper pressure (refer to the “Tires and wheels” section in Chapter 8). Be careful not to overinflate the tire and stay away from the tire when filling it. When the tire and wheel are damaged, do not use Tire Mobility Kit for your safety.

⚠ WARNING

Do not attempt to drive your vehicle if the tire pressure is below 200 kPa (29 psi). This could result in an accident due to sudden tire failure.

10. Switch off the compressor.
11. Detach the hose from the sealant bottle connector and from the tire valve.

Return the Tire Mobility Kit to its storage location in the vehicle.

⚠ WARNING

Carbon monoxide poisoning and suffocation is possible if the engine is left running in a poorly ventilated or unventilated location (such as inside a building).

Distributing the sealant

12. Immediately drive approximately 7~10 km (4~6 miles) or about 10 minutes to evenly distribute the sealant in the tire.

When you use the Tire Mobility Kit, the tire pressure sensors and wheel may be stained by sealant. Therefore, remove the tire pressure sensors and wheel stained by sealant and have your vehicle inspected by an authorized Kia dealer.

Checking the tire inflation pressure

1. After driving approximately 7~10 km (4~6 miles) or about 10 minutes, stop at a suitable location.
2. Connect the filling hose (3) of the compressor (clip mounted side) directly and then connect the filling hose (3) (opposite side) to the tire valve.
3. Connect the compressor to the vehicle power outlet using the cable and connectors.
4. Adjust the tire inflation pressure to 200 kPa (29 psi). With the ignition switched on, proceed as follows.
   - **To increase the inflation pressure:** Switch on the compressor, position I. To check the current inflation pressure setting, briefly switch off the compressor.

⚠ WARNING

Do not let the compressor run for more than 10 minutes, otherwise the device will overheat and may be damaged.

   - **To reduce the inflation pressure:** Press the button (9) on the compressor.

⚠ CAUTION - Tire pressure sensor

Do not use sealant not approved by Kia as it may damage the tire pressure sensors. The sealant on the tire pressure sensor and wheel should be removed when you replace the tire with a new one and inspect the tire pressure sensors at an authorized dealer.

⚠ WARNING

The tire inflation pressure must be at least 200 kPa, 2 bar (29 psi). If it is not, do not continue driving. Call for road side service or towing.

Technical Data

- For 15/16 inch tire

System voltage: DC 12 V

Working voltage: DC 10 - 15 V

Amperage rating: MAX. 10 ± 1 A (at DC 12V operation)

Suitable for use at temperatures:
-30 ~ +70°C (-22 ~ +158°F)

Max. working pressure:
6 bar (87 psi)

Size

Compressor: 161 x 150 x 55.8 mm (6.3 x 5.9 x 2.2 in.)

Sealant bottle: ø 85 X 81 mm (ø 3.3 X 3.2 in.)

Compressor weight:
735 ± 25g (1.62 ± 0.06 lbs)

Sealant volume:
200 ml (12.2 cu. in.)

- For 17/18 inch tire

System voltage: DC 12 V

Working voltage: DC 10 - 15 V

Amperage rating: Max. 15 A ± 1A (at DC 12V operation)

Suitable for use at temperatures:
-30 ~ +70°C (-22 ~ +158°F)

Max. working pressure:
6 bar (87 psi)

Size

Compressor: 161 x 150 x 55.8 mm (6.3 x 5.9 x 2.2 in.)

Sealant bottle: 104 x 85 ø mm (4.1 x 3.3 ø in.)

Compressor weight:
805g ± 30g (1.77 lbs ± 0.07 lbs)

Sealant volume:
300 ml (18.3 cu. in.)

❊ Sealant and spare parts can be obtained and replaced at an authorized vehicle or tire dealer. Empty sealant bottles may be disposed of at home. Liquid residue from the sealant should be disposed of by your vehicle or tire dealer or in accordance with local waste disposal regulations.

TOWING

Towing service

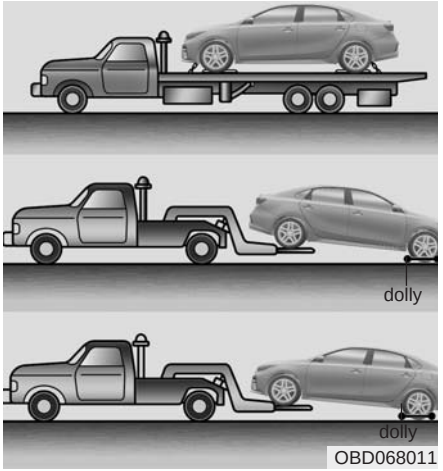

If emergency towing is necessary, we recommend having it done by an authorized Kia dealer or a commercial tow-truck service. Proper lifting and towing procedures are necessary to prevent damage to the vehicle. The use of wheel dollies or flatbed is recommended.

It is acceptable to tow the vehicle with the rear wheels on the ground (without dollies) and the front wheels off the ground.

If any of the loaded wheels or suspension components are damaged or the vehicle is being towed with the front wheels on the ground, use a towing dolly under the front wheels.

When being towed by a commercial tow truck and wheel dollies are not used, the front of the vehicle should always be lifted, not the rear.

✻ NOTICE

If the EPB does not release normally, take your vehicle to an authorized Kia dealer by loading the vehicle on a flatbed tow truck and have the system checked.

⚠ WARNING - Side and curtain Air bag

If your vehicle is equipped with side and curtain air bags, set the ignition switch to the LOCK or ACC position when the vehicle is being towed.

The side and curtain air bag may deploy when the ignition is in the ON position, and the rollover sensor detects a rollover situation.

OYG066035

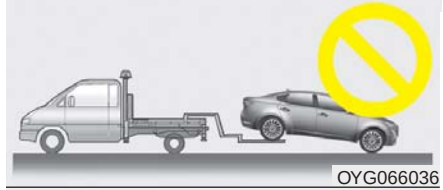
OYG066036

OBD068014

⚠ CAUTION - Towing

- ***Do not tow the vehicle backwards with the front wheels on the ground as this may cause damage to the vehicle.***
- ***Do not tow with sling-type equipment. Use wheel lift or flatbed equipment.***
- ***Do not tow the vehicle with four wheels in contact with the ground if it is a vehicle equipped with DCT or IVT. Otherwise, the transmission will be seriously damaged. Also, make sure not to tow the vehicle connecting it with other vehicles including camper vans.***

When towing your vehicle in an emergency without wheel dollies :

1. Set the ignition switch in the ACC position.
2. Place the transmission shift lever in N (Neutral).
3. Release the parking brake.

⚠ CAUTION - Towing gear position

Failure to place the transmission shift lever in N (Neutral) may cause internal damage to the transmission.

Removable towing hook (if equipped)

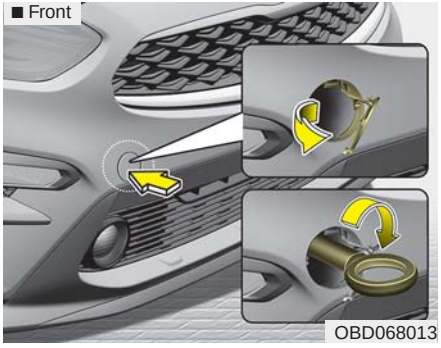

1. Open the tailgate, and remove the towing hook from the tool case.
2. Remove the hole cover pressing the lower (front) part of the cover on the bumper.
3. Install the towing hook by turning it clockwise into the hole until it is fully secured.
4. Remove the towing hook and install the cover after use.

Emergency towing

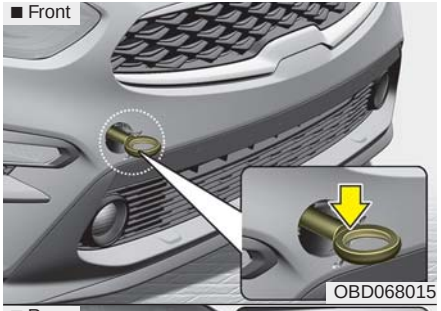

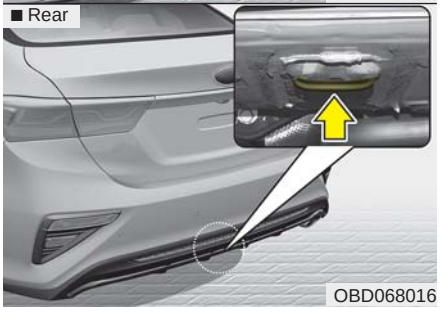

If towing is necessary, we recommend you to have it done by an authorized Kia dealer or a commercial tow truck service.

If towing service is not available in an emergency, your vehicle may be temporarily towed using a cable or chain secured to the emergency towing hook under the front (or rear) of the vehicle. Use extreme caution when towing the vehicle. A driver must be in the vehicle to steer it and operate the brakes.

Towing in this manner may be done only on hard-surfaced roads for a short distance and at low speed. Also, the wheels, axles, power train, steering and brakes must all be in good condition.

- Do not use the tow hooks to pull a vehicle out of mud, sand or other conditions from which the vehicle cannot be driven out under its own power.
- Avoid towing a vehicle heavier than the vehicle doing the towing.
- The drivers of both vehicles should communicate with each other frequently.

⚠ CAUTION

Using a portion of the vehicle other than the tow hooks for towing may damage the body of your vehicle.

- Attach a towing strap to the tow hook.
- Use only a cable or chain specifically intended for use in towing vehicles. Securely fasten the cable or chain to the towing hook provided.
- Accelerate or decelerate the vehicle in a slow and gradual manner while maintaining tension on the tow rope or chain to start or drive the vehicle, otherwise tow hooks and the vehicle may be damaged.
- Before emergency towing, check if the hook is broken or damaged.
- Fasten the towing cable or chain securely to the hook.
- Do not jerk the hook. Apply it steadily and with even force.
- To avoid damaging the hook, do not pull from the side or at a vertical angle. Always pull straight ahead.

⚠ WARNING - Emergency Towing Precautions

Use extreme caution when towing the vehicle.

- **Avoid sudden starts or erratic driving maneuvers which would place excessive stress on the emergency towing hook and towing cable or chain. The hook and towing cable or chain may break and cause serious injury or damage.**
- **If the disabled vehicle is unable to be moved, do not forcibly continue the towing. We recommend that you contact an authorized Kia dealer or a commercial tow truck service for assistance.**
- **Tow the vehicle as straight ahead as possible.**
- **Keep away from the vehicle during towing.**

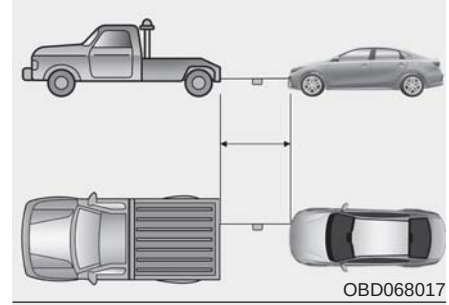

OBD068017

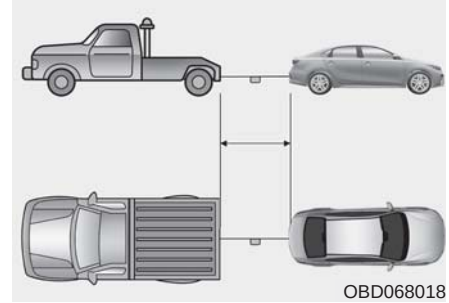

OBD068018

- Use a towing strap less than 5 m (16 feet) long. Attach a white or red cloth (about 30 cm (12 inches) wide) in the middle of the strap for easy visibility.
- Drive carefully so that the towing strap is not loosened during towing.

- The driver must be in the vehicle for steering and braking operations when the vehicle is towed and passengers other than the driver must not be allowed to be on board.

Emergency towing precautions

- Turn the ignition switch to ACC so the steering wheel isn't locked.
- Place the transmission shift lever in N (Neutral).
- Release the parking bake.
- Press the brake pedal with more force than normal since you will have reduced brake performance.
- More steering effort will be required because the power steering system will be disabled.
- If you are driving down a long hill, the brakes may overheat and brake performance will be reduced. Stop often and let the brakes cool off.
- The vehicle should be towed at a speed of 25km/h (16 mph) or less within a distance of 20km (12.4 miles).
- If the car is being towed with all four wheels on the ground, it can be towed only from the front. Be sure that the transmission is in neutral. Be sure the steering is unlocked by placing the ignition switch in the ACC position. A driver must be in the towed vehicle to operate the steering and brakes.

⚠ **CAUTION**
- Dual clutch transmission

- ***If the car is being towed with all four wheels on the ground, it can be towed only from the front. Be sure that the transmission is in neutral. Be sure the steering is unlocked by placing the ignition switch in the ACC position. A driver must be in the towed vehicle to operate the steering and brakes.***
- ***To avoid serious damage to the dual clutch transmission, limit the vehicle speed to 15 km/h (10 mph) and drive less than 1.5 km (1 mile) when towing.***
- ***Before towing, check the dual clutch transmission for fluid leaks under your vehicle. If the dual clutch transmission fluid is leaking, flatbed equipment or a towing dolly must be used.***

⚠ **CAUTION**
- Intelligent Variable Transmission (IVT)

Vehicles with Intelligent Variable Transmission (IVT) can only be towed to an ordinary vehicle when there is no IVT transmission oil leakage. If towing to an ordinary vehicle in the event of oil leakage, the transmission may be damaged. If towing to an ordinary vehicle in the event of oil leakage, the transmission may be damaged.

⚠ **CAUTION**
- Intelligent Variable Transmission

- ***If the car is being towed with all four wheels on the ground, it can be towed only from the front. Be sure that the transmission is in neutral. Be sure the steering is unlocked by placing the ignition switch in the ACC position. A driver must be in the towed vehicle to operate the steering and brakes.***
- ***To avoid serious damage to the Intelligent Variable Transmission, limit the vehicle speed to 15 km/h (10 mph) and drive less than 1.5 km (1 mile) when towing.***
- ***Before towing, check the Intelligent Variable Transmission for fluid leaks under your vehicle. If the Intelligent Variable Transmission fluid is leaking, flatbed equipment or a towing dolly must be used.***

Maintenance

Engine compartment 7-4
Maintenance services 7-5
• Owner's responsibility 7-5
• Owner maintenance precautions 7-6
Owner maintenance 7-8
• Owner maintenance schedule 7-8
Scheduled maintenance service. 7-10
Explanation of scheduled maintenance items . . . 7-21
Checking fluid levels 7-25
Engine oil. 7-26
• Checking the engine oil level 7-26
• Changing the engine oil and filter 7-27
Engine coolant 7-28
• Checking the coolant level 7-28
• Changing the coolant 7-31
Brake/clutch fluid. 7-32
• Checking the brake/clutch fluid level 7-32
Washer fluid 7-33
• Checking the washer fluid level. 7-33
Parking brake. 7-34
• Checking the parking brake. 7-34
Air cleaner. 7-35
• Filter replacement 7-35
Climate control air filter 7-37
• Filter inspection. 7-37
Wiper blades. 7-39
• Blade inspection. 7-39
• Blade replacement. 7-39
Battery. 7-43
• For best battery service 7-43
• Recharging the battery 7-44
• Reset items 7-45
Tires and wheels 7-46
• Tire care 7-46
• Recommended cold tire inflation pressures 7-46
• Tire pressure 7-47
• Checking tire inflation pressure. 7-47
• Tire rotation. 7-48
• Wheel alignment and tire balance. 7-49
• Tire replacement 7-50
• Wheel replacement 7-51
• Tire traction. 7-51
• Tire maintenance. 7-51
• Tire sidewall labeling 7-51
• All season tires. 7-58
• Summer tires 7-58
• Snow tires. 7-58

• Radial-ply tires 7-59
• Low aspect ratio tire 7-60
Fuses 7-61
• Inner panel fuse replacement 7-63
• Engine compartment fuse replacement 7-64
• Fuse/relay panel description 7-67
Light bulbs 7-77
• Bulb replacement precaution 7-77
• Light bulb position (Front) 7-79
• Light bulb position (Rear) 7-80
• Light bulb position (Side) 7-81
• Headlamp (Low beam) bulb replacement (Headlamp Type A,B) 7-81
• Headlamp (High beam) bulb replacement (Headlamp Type A,B) 7-83
• Side marker bulb replacement (Headlamp Type A,B) 7-84
• Position lamp / Day time running lamp (LED type) replacement (Headlamp Type B) 7-85
• Headlamp (LED type) replacement (Headlamp Type C) 7-85
• Front turn signal lamp bulb replacement 7-85
• Front fog lamp bulb replacement 7-86
• Day time running lamp (Bulb type) replacement . . 7-86
• Side repeater lamp (LED type) bulb replacement . . 7-86
• Side repeater lamp (Bulb type) bulb replacement . . 7-87
• Stop and tail lamp/side marker (Bulb type) bulb replacement (Rear combination lamp Type A) . . . 7-87
• Tail lamp (inside) (Bulb type) bulb replacement (Rear combination lamp Type A) 7-88
• Stop and tail lamp (LED type) bulb replacement (Rear combination lamp Type B) 7-89
• Side marker (LED type) bulb replacement (Rear combination lamp Type B) 7-90
• Rear turn signal lamp bulb replacement 7-90
• Back up lamp bulb replacement 7-90
• High mounted stop lamp (LED type) bulb replacement 7-91
• High mounted stop lamp (bulb type) bulb replacement 7-91
• License plate lamp bulb replacement 7-92
• Map lamp (Bulb type) bulb replacement 7-92
• Map lamp (LED type) bulb replacement 7-93
• Room lamp (Bulb type) bulb replacement 7-93
• Room lamp (LED type) bulb replacement 7-94
• Vanity mirror lamp bulb replacement 7-94
• Glove box lamp replacement 7-95
• Trunk room lamp replacement 7-96

Appearance care 7-97
- Exterior care 7-97
- Interior care 7-102

Emission control system 7-105
- Crankcase emission control system 7-105
- Evaporative emission control (including ORVR: Onboard Refueling Vapor Recovery) system 7-105
- Exhaust emission control system 7-106

ENGINE COMPARTMENT

■ **Nu 2.0L MPI Engine (Gasoline)**

■ **Gamma 1.6L T-GDI Engine (Gasoline)**

1. Engine coolant reservoir
2. Engine oil filler cap
3. Brake / clutch fluid reservoir
4. Air cleaner
5. Fuse box
6. Negative battery terminal
7. Positive battery terminal
8. Engine oil dipstick
9. Radiator cap
10. Windshield washer fluid reservoir

❈ The actual engine room in the vehicle may differ from the illustration.

OBD078101L/OBD078135L

MAINTENANCE SERVICES

You should exercise the utmost care to prevent damage to your vehicle and injury to yourself whenever performing any maintenance or inspection procedures.

Should you have any doubts concerning the inspection or servicing of your vehicle, we strongly recommend that you have an authorized Kia dealer perform this work.

An authorized Kia dealer has factory-trained technicians and genuine Kia parts to service your vehicle properly. For expert advice and quality service, see an authorized Kia dealer.

Inadequate, incomplete or insufficient servicing may result in operational problems with your vehicle that could lead to vehicle damage, an accident, or personal injury.

Owner’s responsibility

✻ NOTICE

Maintenance Service and Record Retention are the owner's responsibility.
You should retain documents that show proper maintenance has been performed on your vehicle in accordance with the scheduled maintenance service charts shown on the following pages. You need this information to establish your compliance with the servicing and maintenance requirements of your vehicle warranties.
Detailed warranty information is provided in your Warranty & Consumer Information manual.

Repairs and adjustments required as a result of improper maintenance or a lack of required maintenance are not covered by your vehicle warranties.

We recommend you have your vehicle maintained and repaired by an authorized Kia dealer. An authorized Kia dealer meets Kia’s high service quality standards and receives technical support from Kia in order to provide you with a high level of service satisfaction.

Owner maintenance precautions

Improper or incomplete service may result in problems. This section gives instructions only for the maintenance items that are easy to perform.

As explained earlier in this section, several procedures can be done only by an authorized Kia dealer with special tools.

✻ NOTICE

Improper owner maintenance during the warranty period may affect warranty coverage. For details, read the separate Warranty & Consumer Information manual provided with the vehicle. If you're unsure about any servicing or maintenance procedure, have it done by an authorized Kia dealer.

⚠ WARNING - Maintenance work

Do not wear jewelry or loose clothing while working under the hood of your vehicle with the engine running. These can become entangled in moving parts. If you must run the engine while working under the hood, make certain that you remove all jewelry (especially rings, bracelets, watches, and necklaces) and all neckties, scarves, and similar loose clothing before getting near the engine or cooling fans.

⚠ WARNING - Touching metal parts

Do not touch metal parts (including strut bars) while the engine is operating or hot. Doing so could result in serious bodily injury. Turn the engine off and wait until the metal parts cool down to perform maintenance work on the vehicle.

OWNER MAINTENANCE

The following lists are vehicle checks and inspections that should be performed by the owner or an authorized Kia dealer at the frequencies indicated to help ensure safe, dependable operation of your vehicle.

Any adverse conditions should be brought to the attention of your dealer as soon as possible.

These Owner Maintenance Checks are generally not covered by warranties, and you may be charged for labor, parts and lubricants used.

Owner maintenance schedule

When you stop for fuel:

- Check the engine oil level.
- Check the coolant level in coolant reservoir.
- Check the windshield washer fluid level.
- Look for low or under-inflated tires.

⚠ WARNING - Hot coolant

Be careful when checking your engine coolant level when the engine is hot. Scalding hot coolant and steam may blow out under pressure.

While operating your vehicle:

- Note any changes in the sound of the exhaust or any smell of exhaust fumes in the vehicle.
- Check for vibrations in the steering wheel. Notice any increased steering effort or looseness in the steering wheel, or change in its straight-ahead position.
- Notice if your vehicle constantly turns slightly or “pulls” to one side when traveling on smooth, level road.
- When stopping, listen and check for unusual sounds, pulling to one side, increased brake pedal travel or “hard-to-push” brake pedal.
- If any slipping or changes in the operation of your transmission occurs, check the transmission fluid level.
- Check manual transmission operation, including clutch operation.
- Check dual clutch transmission P (Park) function.

- Check the parking brake.
- Check for fluid leaks under your vehicle (water dripping from the air conditioning system during or after use is normal).

At least monthly:

- Check the coolant level in the engine coolant reservoir.
- Check the operation of all exterior lights, including the stoplights, turn signals and hazard warning flashers.
- Check the inflation pressures of all tires including the spare.

At least twice a year (i.e., every Spring and Fall) :

- Check the radiator, heater and air conditioning hoses for leaks or damage.
- Check the windshield washer spray and wiper operation. Clean the wiper blades with a clean cloth dampened with washer fluid.
- Check the headlight alignment.
- Check the muffler, exhaust pipes, shields and clamps.
- Check the lap/shoulder belts for wear and function.
- Check for worn tires and loose wheel lug nuts.

At least once a year :

- Clean the body and door drain holes.
- Lubricate the door hinges and check the hood hinges.
- Lubricate the door and hood locks and latches.
- Lubricate the door rubber weather-strips.
- Check the air conditioning system.
- Inspect and lubricate dual clutch transmission/intelligent variable transmission linkage and controls.
- Clean the battery and terminals.
- Check the brake fluid level.

SCHEDULED MAINTENANCE SERVICE

Follow the Normal Maintenance Schedule if the vehicle is usually operated where none of the following conditions apply. If any of the following conditions apply, follow the Maintenance Under Severe Usage Conditions.

- Repeatedly driving short distances of less than 8 km (5 miles) in normal temperature or less than 16 km (10 miles) in freezing temperature
- Extensive engine idling or low speed driving for long distances
- Driving on rough, dusty, muddy, unpaved, graveled or salt-spread roads
- Driving in areas using salt or other corrosive materials or in very cold weather
- Driving in heavy dust conditions
- Driving in heavy traffic areas
- Driving on uphill, downhill, or mountain roads repeatedly
- Towing a trailer or using a camper, or roof rack
- Driving as a patrol car, taxi, other commercial use, or vehicle towing
- Driving over 170 km/h (106 mph)
- Frequently driving in stop-and-go condition

If your vehicle is operated in any of the prior listed conditions, you should inspect, replace or refill more frequently, using the severe usage maintenance schedule instead of the normal usage maintenance schedule.

Normal Maintenance Schedule - Non Turbo Models

The following maintenance services must be performed to ensure good emission control and performance.
Keep receipts for all vehicle emission services to protect your warranty. Where both mileage and time are shown, the frequency of service is determined by whichever occurs first.

MAINTENANCE INTERVALS / MAINTENANCE ITEM	Number of months or driving distance, whichever comes first															
	Months	**12**	**24**	**36**	**48**	**60**	**72**	**84**	**96**	**108**	**120**	**132**	**144**	**156**	**168**	**180**
	Miles×1,000	**7.5**	**15**	**22.5**	**30**	**37.5**	**45**	**52.5**	**60**	**67.5**	**75**	**82.5**	**90**	**97.5**	**105**	**112.5**
	Km×1,000	**12**	**24**	**36**	**48**	**60**	**72**	**84**	**96**	**108**	**120**	**132**	**144**	**156**	**168**	**180**
Drive belts *1		At first, inspect at 96,000 km (60,000 miles) or 72 months, after that, inspect every 24,000 km (15,000 miles) or 24 months														
Engine oil and engine oil filter	Nu 2.0L MPI	R	R	R	R	R	R	R	R	R	R	R	R	R	R	R
Fuel additives *2		Add every 12,000 km (7,500 miles) or 12 months														
Air cleaner filter		I	I	I	R	I	I	I	R	I	I	I	R	I	I	I
Spark plugs	Nu 2.0L MPI	Replace every 156,000 km (97,500 miles)														

I : Inspect and if necessary, adjust, correct, clean or replace.

R : Replace or change.

*1 : The drive belt should be replaced when cracks occur or tension is reduced.

*2 : If TOP TIER Detergent Gasoline is not available, one bottle of additive is recommended. Additives are available from your authorized Kia dealer along with information on how to use them. Do not mix other additives.

Normal Maintenance Schedule - Non Turbo Models(CONT.)

MAINTENANCE INTERVALS / MAINTENANCE ITEM	Number of months or driving distance, whichever comes first														
	Months	12	24	36	48	60	72	84	96	108	120	132	144	156	168	180
	Miles×1,000	7.5	15	22.5	30	37.5	45	52.5	60	67.5	75	82.5	90	97.5	105	112.5
	Km×1,000	12	24	36	48	60	72	84	96	108	120	132	144	156	168	180
Rotate tires	Rotate every 12,000 km (7,500 miles)															
Climate control air filter	R	R	R	R	R	R	R	R	R	R	R	R	R	R	R
Vacuum hose	I	I	I	I	I	I	I	I	I	I	I	I	I	I	I
Coolant (Engine)	At first, replace at 192,000 km (120,000 miles) or 10 years, after that, replace every 48,000 km (30,000 miles) or 24 months														
Battery condition	I	I	I	I	I	I	I	I	I	I	I	I	I	I	I
Brake lines, hoses and connections (including booster)	I	I	I	I	I	I	I	I	I	I	I	I	I	I	I
Brake discs and pads	I	I	I	I	I	I	I	I	I	I	I	I	I	I	I
Steering gear rack, linkage and boots	I	I	I	I	I	I	I	I	I	I	I	I	I	I	I
Drive shaft and boots	-	I	-	I	-	I	-	I	-	I	-	I	-	I	-
Suspension ball joints and mounting bolts	I	I	I	I	I	I	I	I	I	I	I	I	I	I	I
Air conditioner compressor/refrigerant	I	I	I	I	I	I	I	I	I	I	I	I	I	I	I
Exhaust system	I	I	I	I	I	I	I	I	I	I	I	I	I	I	I

I : Inspect and if necessary, adjust, correct, clean or replace.

R : Replace or change.

Normal Maintenance Schedule - Non Turbo Models (CONT.)

MAINTENANCE INTERVALS / MAINTENANCE ITEM	Number of months or driving distance, whichever comes first														
	Months	12	24	36	48	60	72	84	96	108	120	132	144	156	168	180
	Miles×1,000	7.5	15	22.5	30	37.5	45	52.5	60	67.5	75	82.5	90	97.5	105	112.5
	Km×1,000	12	24	36	48	60	72	84	96	108	120	132	144	156	168	180
Cooling system		-	-	-	I	-	I	-	I	-	I	-	I	-	I	-
Intelligent Variable Transmission(IVT) fluid		No check, No service required														
Manual transmission fluid *3		-	-	-	I	-	-	-	I	-	-	-	I	-	-	-
Vapor hose and fuel filler cap		-	I	-	I	-	I	-	I	-	I	-	I	-	I	-
Fuel tank air filter *4		-	I	-	I	-	I	-	I	-	I	-	I	-	I	-
Fuel lines, hoses and connections of each part		-	-	-	I	-	-	-	I	-	-	-	I	-	-	-
Parking brake (Hand type)		-	I	-	I	-	I	-	I	-	I	-	I	-	I	-
Brake fluid		-	I	-	I	-	I	-	I	-	I	-	I	-	I	-
Cooling system hoses and connections		Inspect every 12,000 km (7,500 miles) or 6 months														
Clutch (if equipped) and brake pedal free play		Inspect every 12,000 km (7,500 miles) or 6 months														
All latch, hinges and locks		Inspect every 24,000 km (15,000 miles) or 12 months														

I : Inspect and if necessary, adjust, correct, clean or replace.

R : Replace or change.

*3 : Manual transmission fluid should be changed anytime it has been submerged in water.

*4 : Fuel tank air filter is considered to be maintenance free but periodic inspection is recommended as the level of maintenance will be dependent upon the quality fuel used in the vehicle.

Maintenance Under Severe Usage Conditions - Non Turbo Models

The following items must be serviced more frequently on cars normally used under severe driving conditions. Refer to the chart below for the appropriate maintenance intervals.

R : Replace I : Inspect and, after inspection, clean, adjust, repair or replace if necessary

MAINTENANCE ITEM		MAINTENANCE OPERATION	MAINTENANCE INTERVALS	DRIVING CONDITION
Engine oil and engine oil filter	Nu 2.0L MPI	R	Every 6,000 km (3,750 miles) or 6 months	A, B, C, D, E, F, G, H, I, J, K
Air cleaner filter		R	More frequently	C, E
Spark plugs		R	More frequently	A, B, F, G, H, I, K
Intelligent Variable Transmission (IVT) fluid		R	Every 96,000 km (60,000 miles)	A, C, D, E, F, G, H, I, J
Manual transmission fluid		R	Every 120,000 km (75,000 miles)	C, D, E, F, G, H, I, J
Brake discs and pads, calipers and rotors		I	More frequently	C, D, E, G, H
Parking brake (Hand type)		I	More frequently	C, D, G, H
Steering gear rack, linkage and boots		I	More frequently	C, D, E, F, G
Suspension ball joints and mounting bolts		I	More frequently	C, D, E, F, G

MAINTENANCE ITEM	MAINTENANCE OPERATION	MAINTENANCE INTERVALS	DRIVING CONDITION
Drive shafts and boots	I	More frequently	C, D, E, F, G, H, I, J
Climate control air filter	R	More frequently	C, E, G

Severe driving conditions

A - Repeatedly driving short distances of less than 8 km (5 miles) in normal temperature or less than 16 km (10 miles) in freezing temperature

B - Extensive engine idling or low speed driving for long distances

C - Driving on rough, dusty, muddy, unpaved, graveled or salt-spread roads

D - Driving in areas using salt or other corrosive materials or in very cold weather

E - Driving in heavy dust conditions

F - Driving in heavy traffic areas

G - Driving on uphill, downhill, or mountain roads repeatedly

H - Towing a Trailer, or using a camper, or roof rack

I - Driving as a patrol car, taxi, other commercial use or vehicle towing

J - Driving over 170 km/h (106 mph)

K - Frequently driving in stop-and-go conditions

Normal Maintenance Schedule - Turbo Models

The following maintenance services must be performed to ensure good emission control and performance.
Keep receipts for all vehicle emission services to protect your warranty. Where both mileage and time are shown, the frequency of service is determined by whichever occurs first.

MAINTENANCE INTERVALS / MAINTENANCE ITEM		Number of months or driving distance, whichever comes first														
		Months	**12**	**24**	**36**	**48**	**60**	**72**	**84**	**96**	**108**	**120**	**132**	**144**	**156**	**168**	**180**
		Miles×1,000	**7.5**	**15**	**22.5**	**30**	**37.5**	**45**	**52.5**	**60**	**67.5**	**75**	**82.5**	**90**	**97.5**	**105**	**112.5**
		Km×1,000	**12**	**24**	**36**	**48**	**60**	**72**	**84**	**96**	**108**	**120**	**132**	**144**	**156**	**168**	**180**
Drive belts *1		At first, inspect at 96,000 km (60,000 miles) or 72 months, after that, inspect every 24,000 km (15,000 miles) or 24 months														
Engine oil and engine oil filter	Gamma 1.6L T-GDI	Replace every 10,000 km (6,200 miles)														
Fuel additives *2		Add every 12,000 km (7,500 miles) or 12 months														
Air cleaner filter		I	I	I	R	I	I	I	R	I	I	I	R	I	I	I
Spark plugs	Gamma 1.6L T-GDI	Replace every 72,000km (45,000miles)														

I : Inspect and if necessary, adjust, correct, clean or replace.

R : Replace or change.

*1 : The drive belt should be replaced when cracks occur or tension is reduced.

*2 : If TOP TIER Detergent Gasoline is not available, one bottle of additive is recommended. Additives are available from your authorized Kia dealer along with information on how to use them. Do not mix other additives.

Normal Maintenance Schedule - Turbo Models(CONT.)

MAINTENANCE INTERVALS / MAINTENANCE ITEM	Number of months or driving distance, whichever comes first														
	Months	12	24	36	48	60	72	84	96	108	120	132	144	156	168	180
	Miles×1,000	7.5	15	22.5	30	37.5	45	52.5	60	67.5	75	82.5	90	97.5	105	112.5
	Km×1,000	12	24	36	48	60	72	84	96	108	120	132	144	156	168	180
Rotate tires	Rotate every 12,000 km (7,500 miles)															
Climate control air filter	R	R	R	R	R	R	R	R	R	R	R	R	R	R	R
Vacuum hose	I	I	I	I	I	I	I	I	I	I	I	I	I	I	I
Coolant (Engine)	At first, replace at 192,000 km (120,000 miles) or 10 years, after that, replace every 48,000 km (30,000 miles) or 24 months														
Battery condition	I	I	I	I	I	I	I	I	I	I	I	I	I	I	I
Brake lines, hoses and connections (including booster)	I	I	I	I	I	I	I	I	I	I	I	I	I	I	I
Brake discs and pads	I	I	I	I	I	I	I	I	I	I	I	I	I	I	I
Steering gear rack, linkage and boots	I	I	I	I	I	I	I	I	I	I	I	I	I	I	I
Drive shaft and boots	-	I	-	I	-	I	-	I	-	I	-	I	-	I	-
Suspension ball joints and mounting bolts	I	I	I	I	I	I	I	I	I	I	I	I	I	I	I
Air conditioner compressor/refrigerant	I	I	I	I	I	I	I	I	I	I	I	I	I	I	I
Exhaust system	I	I	I	I	I	I	I	I	I	I	I	I	I	I	I

I : Inspect and if necessary, adjust, correct, clean or replace.

R : Replace or change.

Normal Maintenance Schedule - Turbo Models (CONT.)

MAINTENANCE INTERVALS / MAINTENANCE ITEM	Number of months or driving distance, whichever comes first														
	Months	12	24	36	48	60	72	84	96	108	120	132	144	156	168	180
	Miles×1,000	7.5	15	22.5	30	37.5	45	52.5	60	67.5	75	82.5	90	97.5	105	112.5
	Km×1,000	12	24	36	48	60	72	84	96	108	120	132	144	156	168	180
Cooling system	-	-	-	I	-	I	-	I	-	I	-	I	-	I	-
Intelligent Variable Transmission(IVT) fluid	No check, No service required														
Manual transmission fluid *3	-	-	-	I	-	-	-	I	-	-	-	I	-	-	-
Dual clutch transmission *3	-	-	-	I	-	-	-	I	-	-	-	I	-	-	-
Vapor hose and fuel filler cap	-	I	-	I	-	I	-	I	-	I	-	I	-	I	-
Fuel tank air filter *4	-	I	-	I	-	I	-	I	-	I	-	I	-	I	-
Fuel lines, hoses and connections of each part	-	-	-	I	-	-	-	I	-	-	-	I	-	-	-
Parking brake (Hand type)	-	I	-	I	-	I	-	I	-	I	-	I	-	I	-
Brake fluid	-	I	-	I	-	I	-	I	-	I	-	I	-	I	-
Cooling system hoses and connections	Inspect every 12,000 km (7,500 miles) or 6 months														
Clutch (if equipped) and brake pedal free play	Inspect every 12,000 km (7,500 miles) or 6 months														
All latch, hinges and locks	Inspect every 24,000 km (15,000 miles) or 12 months														

I : Inspect and if necessary, adjust, correct, clean or replace.

R : Replace or change.

*3 : Manual transmission (or Dual clutch transmission (DCT) fluid) fluid should be changed anytime it has been submerged in water.

*4 : Fuel tank air filter is considered to be maintenance free but periodic inspection is recommended as the level of maintenance will be dependent upon the quality fuel used in the vehicle.

Maintenance Under Severe Usage Conditions Turbo Models

The following items must be serviced more frequently on cars normally used under severe driving conditions. Refer to the chart below for the appropriate maintenance intervals.

R : Replace I : Inspect and, after inspection, clean, adjust, repair or replace if necessary

MAINTENANCE ITEM		MAINTENANCE OPERATION	MAINTENANCE INTERVALS	DRIVING CONDITION
Engine oil and engine oil filter	Gamma 1.6L T-GDI	R	Replace every 5,000 km (3,100 miles)	A, B, C, D, E, F, G, H, I, J, K
Air cleaner filter		R	More frequently	C, E
Spark plugs		R	More frequently	A, B, F, G, H, I, K
Intelligent Variable Transmission (IVT) fluid		R	Every 96,000 km (60,000 miles)	A, C, D, E, F, G, H, I, J
Manual transmission fluid/ Dual clutch transmission (DCT) fluid		R	Every 120,000 km (75,000 miles)	C, D, E, F, G, H, I, J
Brake discs and pads, calipers and rotors		I	More frequently	C, D, E, G, H
Parking brake (Hand type)		I	More frequently	C, D, G, H
Steering gear rack, linkage and boots		I	More frequently	C, D, E, F, G
Suspension ball joints and mounting bolts		I	More frequently	C, D, E, F, G

MAINTENANCE ITEM	MAINTENANCE OPERATION	MAINTENANCE INTERVALS	DRIVING CONDITION
Drive shafts and boots	I	More frequently	C, D, E, F, G, H, I, J
Climate control air filter	R	More frequently	C, E, G

Severe driving conditions

A - Repeatedly driving short distances of less than 8 km (5 miles) in normal temperature or less than 16 km (10 miles) in freezing temperature

B - Extensive engine idling or low speed driving for long distances

C - Driving on rough, dusty, muddy, unpaved, graveled or salt-spread roads

D - Driving in areas using salt or other corrosive materials or in very cold weather

E - Driving in heavy dust distances

F - Driving in heavy traffic areas

G - Driving on uphill, downhill, or mountain roads repeatedly

H - Towing a Trailer, or using a camper, or roof rack

I - Driving as a patrol car, taxi, other commercial use or vehicle towing

J - Driving over 170 km/h (106 mph)

K - Frequently driving in stop-and-go conditions

EXPLANATION OF SCHEDULED MAINTENANCE ITEMS

Engine oil and filter

The engine oil and filter should be changed at the intervals specified in the maintenance schedule. If the vehicle is being driven in severe conditions, more frequent oil and filter changes are required.

Drive belts

Inspect all drive belts for evidence of cuts, cracks, excessive wear or oil saturation, and replace if necessary. Drive belts should be checked periodically for proper tension and adjusted as necessary.

Fuel filter (for gasoline)

This gasoline powered vehicle is equipped with a lifetime fuel filter that is integrated with the fuel tank. Regular maintenance or replacement is not needed; however, the quality of fuel used may impact the frequency of maintenance needed. If there are any fuel related problems like fuel flow restriction, surging, loss of power, hard starting problem, etc., fuel filter inspection or replacement may be needed.

The fuel filter be inspected or replaced by an authorized Kia dealer.

Fuel lines, fuel hoses and connections

Check the fuel lines, fuel hoses and connections for leakage and damage. Have an authorized Kia dealer replace any damaged or leaking parts immediately.

Vapor hose and fuel filler cap

The vapor hose and fuel filler cap should be inspected at the intervals specified in the maintenance schedule. Make sure that a new vapor hose or fuel filler cap is installed correctly.

Vacuum crankcase ventilation hoses

Inspect the surface of hoses for evidence of heat and/or mechanical damage. Hard and brittle rubber, cracking, tears, cuts, abrasions, and excessive swelling indicate deterioration.

Pay particular attention to the hose surfaces nearest to high heat sources, such as the exhaust manifold.

Inspect the hose routing to assure that the hoses do not come in contact with any heat source, sharp edges or moving component which might cause heat damage or mechanical wear. Inspect all hose connections, such as clamps and couplings, to make sure they are secure, and that no leaks are present. Hoses should be replaced immediately if there is any evidence of deterioration or damage.

Air cleaner filter

A Genuine Kia air cleaner filter is recommended when the filter is replaced.

Spark plugs

Make sure to install new spark plugs of the correct heat range.

Cooling system

Check the cooling system components, such as the radiator, coolant reservoir, hoses and connections for leakage and damage. Replace any damaged parts.

Coolant

The coolant should be changed at the intervals specified in the maintenance schedule.

Dual clutch transmission fluid (if equipped)

Inspect the dual clutch transmission fluid according to the maintenance schedule.

Intelligent Variable Transmission (IVT) fluid

The Intelligent Variable Transmission (IVT) fluid should not be checked under normal usage conditions.

But in severe conditions, the fluid should be changed at an authorized Kia dealer in accordance to the scheduled maintenance at the beginning of this chapter.

(Refer to the “Maintenance Under Severe Usage Conditions” section in Chapter 7.)

✻ NOTICE

The Intelligent Variable Transmission (IVT) fluid color is amber.
As the vehicle is driven, the Intelligent Variable Transmission (IVT) fluid will begin to look darker. This is normal, and you should not judge the need to replace the fluid based upon the changed color.

⚠ **CAUTION**

Use only specified Intelligent Variable Transmission (IVT) fluid. The use of non-specified fluid (even marked as compatible with genuine) could result in shift quality deterioration and vibrations, and eventually, transmission failure. (Refer to the "Recommended lubricants and capacities" section in Chapter 8.)

WARNING
- Do not change oil.
  In case of repair, use only Genuine SP-CVT1
- Ne changez pas l'huile.
  En cas de réparation,utilisez uniquement SP-CVT1
- 请勿随便更换油 .
  需要维修的情况下，只能使用正品 SP-CVT1
- Масло не заменять. В случае ремонта следует использовать только оригинальное SP-CVT1

OBD078066

Manual transmission fluid (if equipped)

Inspect the manual transmission fluid according to the maintenance schedule.

Brake hoses and lines

Visually check for proper installation, chafing, cracks, deterioration and any leakage. Replace any deteriorated or damaged parts immediately.

Brake fluid

Check the brake fluid level in the brake fluid reservoir. The level should be between the “MIN” and “MAX” marks on the side of the reservoir. Use only hydraulic brake fluid conforming to DOT 3 or DOT 4 specification.

Parking brake

Inspect the parking brake system including the parking brake lever and cables.

Brake discs, pads, calipers and rotors

Check the pads and discs for excessive wear and calipers for fluid leakage.

Exhaust pipe and muffler

Visually inspect the exhaust pipes, muffler and hangers for cracks, deterioration, or damage. Start the engine and listen carefully for any exhaust gas leakage. Tighten connections or replace parts as necessary.

Suspension mounting bolts

Check the suspension connections for looseness or damage. Retighten to the specified torque.

Steering gear box, linkage & boots/lower arm ball joint

With the vehicle stopped and engine off, check for excessive free-play in the steering wheel.

Check the linkage for bends or damage. Check the dust boots and ball joints for deterioration, cracks, or damage. Replace any damaged parts.

Drive shafts and boots

Check the drive shafts, boots and clamps for cracks, deterioration, or damage. Replace any damaged parts and, if necessary, repack the grease.

Air conditioning refrigerant

Check the air conditioning lines and connections for leakage and damage.

CHECKING FLUID LEVELS

When checking engine oil, engine coolant, brake fluid, and washer fluid, always be sure to clean the area around any filler plug, drain plug, or dipstick before checking or draining any lubricant or fluid. This is especially important in dusty or sandy areas and when the vehicle is used on unpaved roads. Cleaning the plug and dipstick areas will prevent dirt and grit from entering the engine and other mechanisms that could be damaged.

ENGINE OIL

Checking the engine oil level

■ Nu 2.0L MPI Engine (Gasoline)

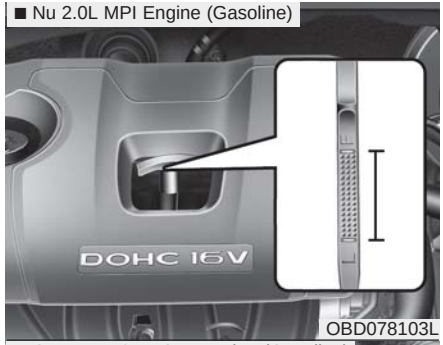

OBD078103L

■ Gamma 1.6L T-GDI Engine (Gasoline)

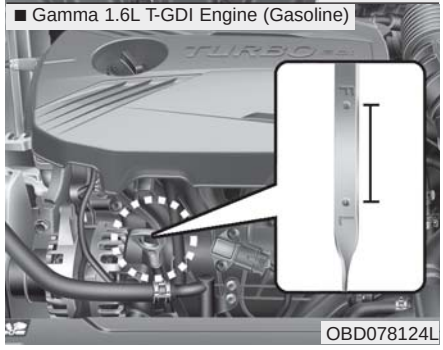

OBD078124L

1. Be sure the vehicle is on level ground.
2. Start the engine and allow it to reach normal operating temperature.
3. Turn the engine off and wait for a few minutes (about 5 minutes) for the oil to return to the oil pan.
4. Pull the dipstick out, wipe it clean, and reinsert it fully.

⚠ WARNING - Radiator hose

Be very careful not to touch the radiator hose when checking or adding the engine oil as it may be hot enough to burn you.

5. Pull the dipstick out again and check the level. The level should be between F and L.

⚠ CAUTION - Replacing engine oil

Do not overfill the engine oil. It may damage the engine.

■ Nu 2.0L MPI Engine (Gasoline)

OBD078105L

■ Gamma 1.6L T-GDI Engine (Gasoline)

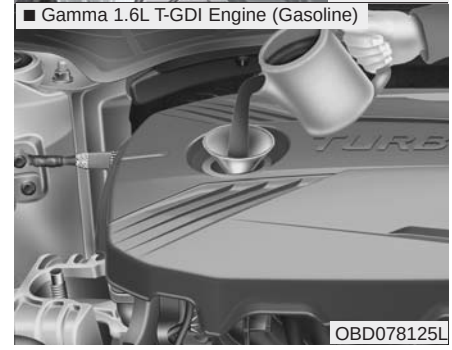

OBD078125L

If it is near or at L, add enough oil to bring the level to F. **Do not overfill.**

Use a funnel to help prevent oil from being spilled on engine components.

Use only the specified engine oil. (Refer to the "Recommended lubricants and capacities" section in Chapter 8.)

Changing the engine oil and filter

Have engine oil and filter changed by an authorized Kia dealer according to the Maintenance Schedule at the beginning of this chapter.

WARNING - Used engine oil

Used engine oil may cause irritation or cancer of the skin if left in contact with the skin for prolonged periods of time. Always protect your skin by washing your hands thoroughly with soap and warm water as soon as possible after handling used oil.

ENGINE COOLANT

The high-pressure cooling system has a reservoir filled with year round antifreeze coolant. The reservoir is filled at the factory.

Check the antifreeze protection and coolant level at least once a year: at the beginning of the winter season, and before traveling to a colder climate.

Checking the coolant level

⚠ WARNING

Removing radiator cap

Never attempt to remove the radiator cap while the engine is operating or hot. Doing so might lead to cooling system and engine damage and could result in serious personal injury from escaping hot coolant or steam.

- Turn the engine off and wait until it cools down. Use extreme care when removing the radiator cap. Wrap a thick towel around it, and turn it counterclockwise slowly to the first stop. Step back while the pressure is released from the cooling system.

  When you are sure all the pressure has been released, press down on the cap, using a thick towel, and continue turning counterclockwise to remove it.
- Even if the engine is not operating, do not remove the radiator cap or the drain plug while the engine and radiator are hot. Hot coolant and steam may still blow out under pressure, causing serious injury.

⚠ WARNING - Cooling fan

Use caution when working near the blade of the cooling fan. The electric motor (cooling fan) is controlled by engine coolant temperature, refrigerant pressure and vehicle speed. it may sometimes operate even when the engine is not running.

■ Nu 2.0L MPI Engine (Gasoline)

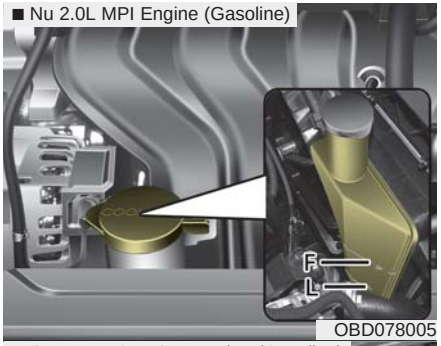

OBD078005

■ Gamma 1.6L TGDI Engine (Gasoline)

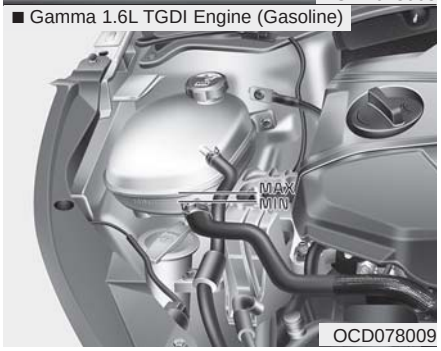

OCD078009

Check the condition and connections of all cooling system hoses and heater hoses. Replace any swollen or deteriorated hoses.

The coolant level should be filled between F and L marks on the side of the coolant reservoir when the engine is cool.

If the coolant level is low, add enough specified coolant to provide protection against freezing and corrosion. Bring the level to F, but do not overfill. If frequent additions are required, see an authorized Kia dealer for a cooling system inspection.

✻ NOTICE

Make sure the coolant cap is properly closed after refilling the coolant. Otherwise the engine could be overheated while driving.

■ Engine room rear view
- Gamma 1.6L TGDI Engine (Gasoline)

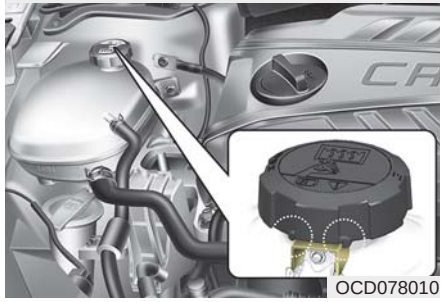

1. **Make sure that the tiny protrusions inside the coolant cap are securely interlocked.**

Recommended engine coolant

- When adding coolant, use only deionized water or soft water for your vehicle and never mix hard water in the coolant filled at the factory. An improper coolant mixture can result in serious malfunction or engine damage.
- The engine in your vehicle has aluminum engine parts and must be protected by an ethylene-glycol with phosphate based coolant to prevent corrosion and freezing.
- DO NOT USE alcohol or methanol coolant or mix them with the specified coolant.
- Do not use a solution that contains more than 60% antifreeze or less than 35% antifreeze. This would reduce the effectiveness of the solution.

✻ NOTICE

Make sure that the coolant cap is properly closed after refilling the coolant. Otherwise the engine could overheat while driving.

For mixture percentage, refer to the following table.

Ambient Temperature	Mixture Percentage (volume)	
	Antifreeze	Water
-15°C (5°F)	35	65
-25°C (-13°F)	40	60
-35°C (-31°F)	50	50
-45°C (-49°F)	60	40

■ Nu 2.0L MPI Engine (Gasoline)

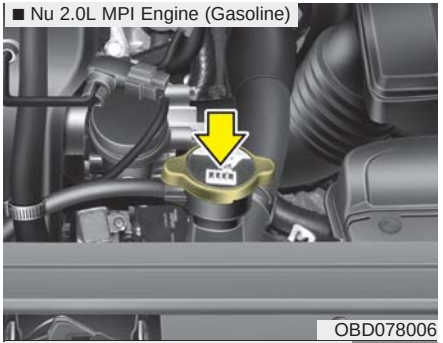

OBD078006

■Gamma 1.6L TGDI Engine (Gasoline)

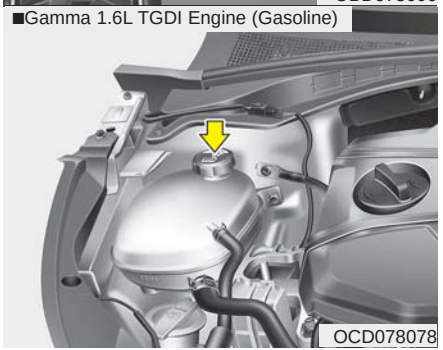

OCD078078

⚠ WARNING

Radiator cap

Do not remove the radiator cap when the engine and radiator are hot. Scalding hot coolant and steam may blow out under pressure which may result in serious injury.

Changing the coolant

Have the coolant changed by an authorized Kia dealer according to the Maintenance Schedule at the beginning of this chapter.

⚠ CAUTION

Put a thick cloth or fabric around the radiator cap before refilling the coolant in order to prevent the coolant from over-flowing into engine parts such as the alternator.

BRAKE/CLUTCH FLUID (IF EQUIPPED)

Checking the brake/clutch fluid level

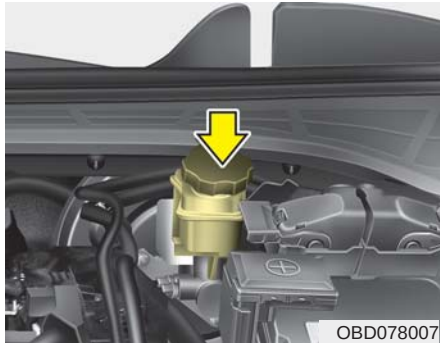

Check the fluid level in the reservoir periodically. The fluid level should be between the MAX (Maximum) and MIN (Minimum) marks on the side of the reservoir.

Before removing the reservoir cap and adding brake/clutch fluid, clean the area around the reservoir cap thoroughly to prevent brake/clutch fluid contamination.

⚠ CAUTION - Proper fluid

Only use brake/clutch fluid in brake system. Small amounts of improper fluids (such as engine oil) can cause damage to the brake system.

If the level is low, add fluid until you reach the MAX (Maximum) level. The level will fall with accumulated mileage. This is a normal condition associated with the wear of brake linings. If the fluid level is excessively low, have the brake system checked by an authorized Kia dealer.

Use only the specified brake/clutch fluid. (Refer to the "Recommended lubricants and capacities" section in Chapter 8.)

Never mix different types of fluid.

In the event the brake system requires frequent additions of fluid, the vehicle should be inspected by an authorized Kia dealer.

When changing and adding brake/clutch fluid, handle it carefully. Do not let it come in contact with your eyes. If brake/clutch fluid should come in contact with your eyes, immediately flush them with a large quantity of fresh tap water. Have your eyes examined by a doctor as soon as possible.

⚠ CAUTION - Brake/clutch fluid

Do not allow brake/clutch fluid to contact the vehicle's body paint, as paint damage will result.

Brake/clutch fluid which has been exposed to open air for an extended time should never be used as its quality cannot be guaranteed. It should be disposed of properly.

WASHER FLUID

Checking the washer fluid level

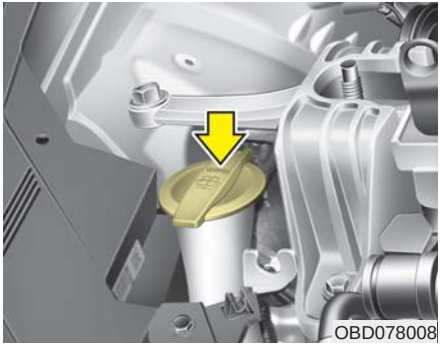

The reservoir is translucent so that you can check the level with a quick visual inspection.

Check the fluid level in the washer fluid reservoir and add fluid if necessary. In warm climates, plain water may be used if washer fluid is not available; however, in cold climates, washer fluid with anti-freezing characteristics is required to prevent freezing.

⚠ WARNING - Flammable fluid

Do not allow the washer fluid to come in contact with open flames or sparks. The windshield washer fluid reservoir is flammable under certain circumstances. This can result in a fire.

⚠ WARNING - Coolant

- **Do not use radiator coolant or antifreeze in the washer fluid reservoir.**
- **Radiator coolant can severely obscure visibility when sprayed on the windshield and may cause loss of vehicle control.**

⚠ WARNING - Windshield fluid

Do not drink the windshield washer fluid. The windshield washer fluid is poisonous to humans and animals.

PARKING BRAKE

Checking the parking brake

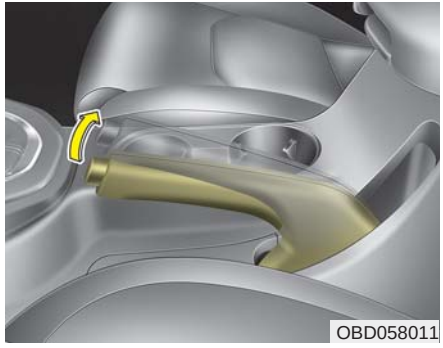

Check the stroke of the parking brake by counting the number of “clicks” heard while fully applying it from the released position. Also, the parking brake alone should securely hold the vehicle on a fairly steep grade. If the stroke is more or less than specified, have the parking brake adjusted by an authorized Kia dealer.

Stroke : 5~7 “clicks” at a force of 20 kg, 196 N (44 lbs).

AIR CLEANER

Filter replacement

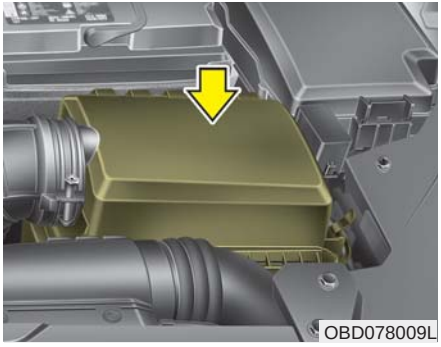

The air filter must be replaced when necessary, and should not be washed.

While inspecting the air cleaner compartment, the air filter can be cleaned using compressed air.

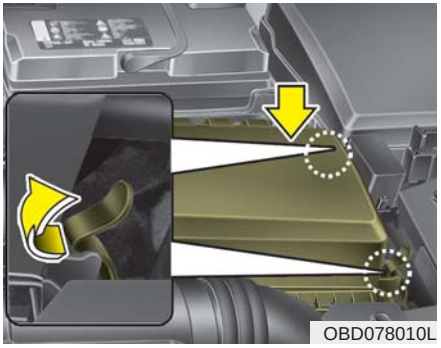

1. Loosen the air cleaner cover attaching clips and open the cover.

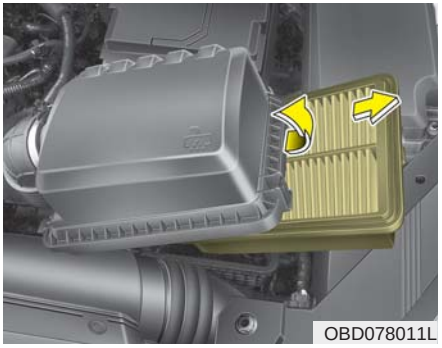

2. Wipe the inside of the air cleaner.
3. Replace the air cleaner filter.
4. Lock the cover with the cover attaching clips.

✻ NOTICE

Insert the hinge(1) and engage the clips when mounting the air cleaner cover.

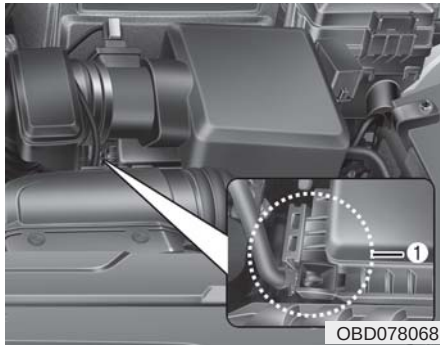

OBD078068

Replace the filter according to the Maintenance Schedule.

If the vehicle is operated in extremely dusty or sandy areas, replace the element more often than the usual recommended intervals. (Refer to the “Maintenance under severe usage conditions” section in this Chapter.)

⚠ CAUTION - Air filter maintenance

- ***Do not drive with the air cleaner removed; this will result in excessive engine wear.***
- ***When removing the air cleaner filter, be careful that dust or dirt does not enter the air intake, or damage may result.***
- ***Use a Kia genuine part. Use of a non-genuine part could damage the air flow sensor.***

CLIMATE CONTROL AIR FILTER

Filter inspection

The climate control air filter should be replaced according to the Maintenance Schedule. If the vehicle is operated in severely air-polluted cities or on dusty rough roads for a long period, it should be inspected more frequently and replaced earlier. When you replace the climate control air filter, replace it performing the following procedure, and be careful to avoid damaging other components.

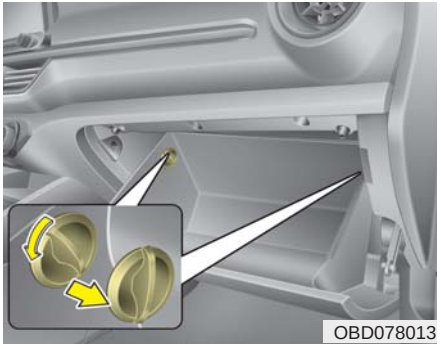

1. Open the glove box and remove the stoppers on both sides.

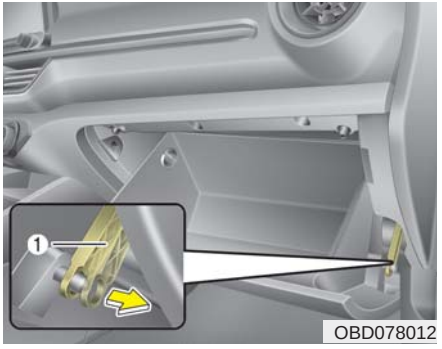

2. With the glove box open, pull the support strap (1).

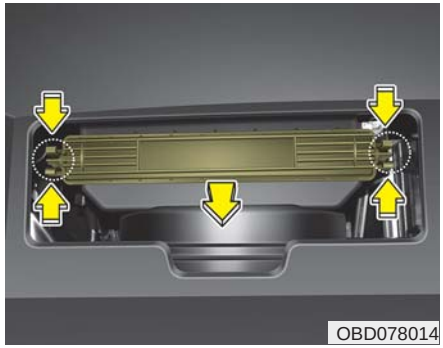

3. Remove the climate control air filter cover while pressing the lock on both sides of the cover.

4. Replace the climate control air filter.
5. Reassemble in the reverse order of disassembly.

When replacing the climate control air filter, install it properly. Otherwise, the system may produce noise, and the effectiveness of the filter may be reduced.

WIPER BLADES

Blade inspection

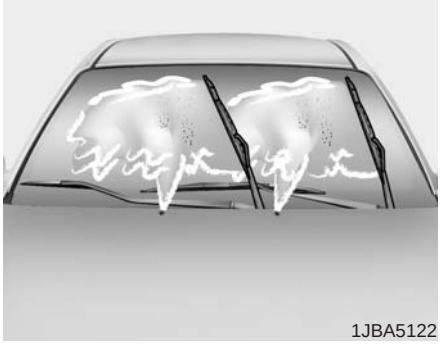

Commercial hot waxes applied by automatic car washes have been known to make the windshield difficult to clean.

Contamination of either the windshield or the wiper blades with foreign matter can reduce the effectiveness of the windshield wipers. Common sources of contamination are insects, tree sap, and hot wax treatments used by some commercial car washes. If the blades are not wiping properly, clean both the window and the blades with a good cleaner or mild detergent, and rinse thoroughly with clean water.

⚠ **CAUTION - Wiper blades**

To prevent damage to the wiper blades, do not use gasoline, kerosene, paint thinner, or other solvents on or near them.

Blade replacement

When the wipers no longer clean adequately, the blades may be worn or cracked, and require replacement.

To prevent damage to the wiper arms or other components, do not attempt to move the wipers manually.

Aftermarket wiper blades may result in wiper malfunction and/or failure. It is recommended to use certified Kia parts.

Front windshield wiper blade

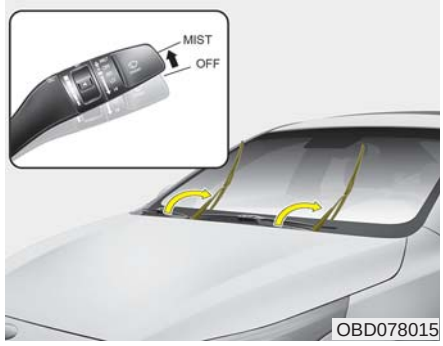

To inspect or replace the windshield wiper blades and to prevent damaging the hood, move the windshield wiper blades to the service position as follows;

After turning off the engine, move the wiper switch to the single wiping (MIST) position within 20 seconds and hold the switch more than 2 seconds until the wiper blade is in the fully up position.

⚠ CAUTION - Wiper arms

- ***Do not allow the wiper arm to fall against the windshield, since it may chip or crack the windshield.***
- ***Do not pull wiper arm forward, since the arm could chip the hood paint.***

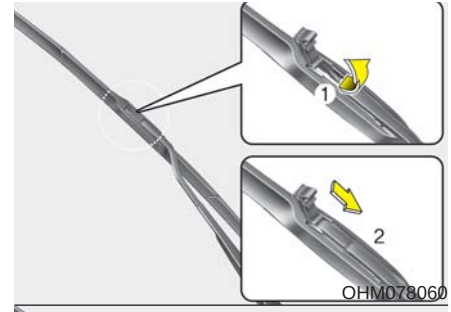

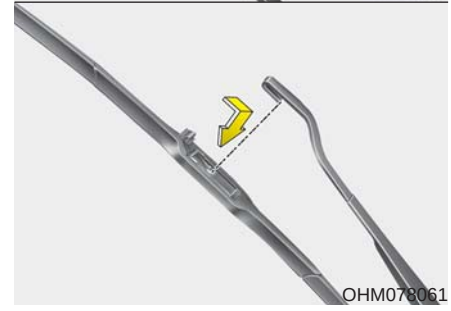

Type A

1. Raise the wiper arm.
2. Lift up the wiper blade clip. Then pull down the blade assembly and remove it.
3. Install the new blade assembly.

4. Return the wiper arm on the windshield.
5. Turn ignition to the ON position and the wiper arms will return to the normal operating position.

Type B

1. Raise the wiper arm and turn the wiper blade assembly to expose the plastic locking clip.

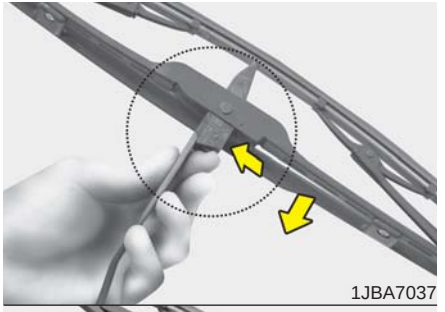

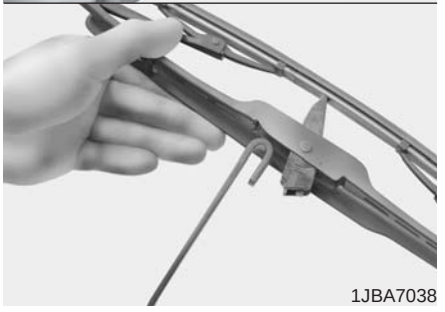

2. Compress the clip and slide the blade assembly downward.
3. Lift it off the arm.
4. Install the new blade assembly.

5. Return the wiper arm on the windshield.
6. Turn ignition to the ON position and the wiper arms will return to the normal operating position.

BATTERY

For best battery service

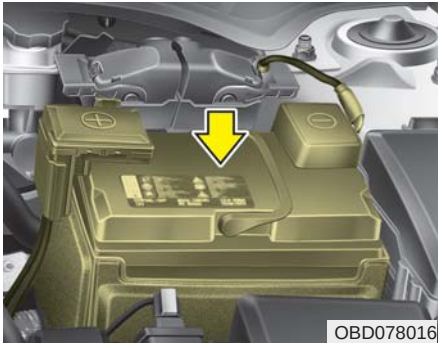

- Keep the battery securely mounted.
- Keep the battery top clean and dry.
- Keep the terminals and connections clean, tight, and coated with petroleum jelly or terminal grease.
- Rinse any spilled electrolyte from the battery immediately with a solution of water and baking soda.
- If the vehicle is not going to be used for an extended time, disconnect the battery cables.

WARNING - Risk of explosion

Keep lit cigarettes and all other flames or sparks away from the battery.

The battery contains hydrogen -- a highly combustible gas which will explode if it comes in contact with a flame or spark.

Keep batteries out of the reach of children because batteries contain highly corrosive SULFURIC ACID and electrolytes. Do not allow battery acid to contact your skin, eyes, clothing or paint finish.

Wear eye protection when charging or working near a battery. Always provide ventilation when working in an enclosed space.

Always read the following instructions carefully when handling a battery.

If any electrolyte gets into your eyes, flush your eyes with clean water for at least 15 minutes and get immediate medical attention.

If electrolyte gets on your skin, thoroughly wash the contacted area. If you feel pain or a burning sensation, get medical attention immediately.

An inappropriately disposed battery can be harmful to the environment and human health. Dispose the battery according to your local law(s) or regulation.

The battery contains lead. Do not dispose of it after use. Please return the battery to an authorized Kia dealer to be recycled.

Never attempt to recharge the battery when the battery cables are connected.

⚠ WARNING - Risk of electrocution

Never touch the electrical ignition system while the vehicle is running. This system works with high voltage which can shock you.

⚠ WARNING - Recharging Battery

Never attempt to recharge the battery when the battery cables are connected.

⚠ WARNING - Battery lead compound

Battery posts, terminals, and related accessories contain lead and lead compounds.

Wash hands after handling.

✻ NOTICE

If you connect unauthorized electronic devices to the battery, the battery may be discharged. Never use unauthorized devices.

Recharging the battery

Your vehicle has a maintenance-free, calcium-based battery.

- If the battery becomes discharged in a short time (because, for example, the headlamps or interior lamps were left on while the vehicle was not in use), recharge it by slow charging (trickle) for 10 hours.
- If the battery gradually discharges because of high electric load while the vehicle is being used, recharge it at 20-30A for two hours.

When recharging the battery, observe the following precautions:

- The battery must be removed from the vehicle and placed in an area with good ventilation.
- Do not allow cigarettes, sparks, or flame near the battery.
- Watch the battery during charging, and stop or reduce the charging rate if the battery cells begin gassing (boiling) violently or if the temperature of the electrolyte of any cell exceeds 49°C (120°F).
- Wear eye protection when checking the battery during charging.
- Disconnect the battery charger in the following order.

1. Turn off the battery charger main switch.
2. Unhook the negative clamp from the negative battery terminal.
3. Unhook the positive clamp from the positive battery terminal.

- Before performing maintenance or recharging the battery, turn off all accessories and stop the engine.
- The negative battery cable must be removed first and installed last when the battery is disconnected.

Reset items

The following should be reset after the battery has been discharged or the battery has been disconnected.

- Auto up/down window (See Chapter 4)
- Sunroof (See Chapter 4)
- Trip computer (See Chapter 4)
- Climate control system (See Chapter 4)
- Driver position memory system (See Chapter 3)
- Audio (See Chapter 4)

TIRES AND WHEELS

Tire care

For proper maintenance, safety, and maximum fuel economy, you must always maintain recommended tire inflation pressures and stay within the load limits and weight distribution recommended for your vehicle.

Recommended cold tire inflation pressures

All tire pressures (including the spare) should be checked when the tires are cold. “Cold Tires” means the vehicle has not been driven for at least three hours or driven less than 1.6 km (one mile).

Recommended pressures must be maintained for the best ride, top vehicle handling, and minimum tire wear.

For recommended inflation pressure refer to the “Ties and wheels” section in Chapter 8.

All specifications (sizes and pressures) can be found on a label attached to the driver’s side center pillar.

⚠ WARNING - Tire underinflation

Inflate your tires consistent with the instructions provided in this manual.

Regularly check the tire inflation pressure, and correct it as needed.

(Continued)

(Continued)

Driving on under-inflated tires not only compromises your vehicle's driving stability but also may lead to tire damage and the risk of an accident. Severe under inflation (70kPa (10 psi) or more) can lead to severe heat build up, causing blowouts, tread separation and other tire failures that can result in the loss of vehicle control. This risk is much higher on hot days and when driving for long periods at high speeds.

Failure to maintain specified pressure may result in excessive wear, poor handling, reduced fuel economy, deformation of the tire and/or wheel, harsh ride conditions, possibility for additional damage from road hazards, or result in tire failure.

Tire pressure

Always observe the following:

- Check tire pressure when the tires are cold. (After vehicle has been parked for at least three hours or hasn't been driven more than 1.6 km (one mile) since startup.)
- Check the pressure of your spare tire each time you check the pressure of other tires.
- Never overload your vehicle. Be careful not to overload a vehicle luggage rack if your vehicle is equipped with one.
- Warm tires normally exceed recommended cold tire pressures by 28 to 41 kPa (4 to 6 psi). Do not release air from warm tires to adjust the pressure or the tires will be underinflated.

⚠ WARNING - Tire Inflation

Overinflation or underinflation can reduce tire life, adversely affect vehicle handling, and lead to sudden tire failure. This could result in loss of vehicle control and potential injury.

Checking tire inflation pressure

Check your tires once a month or more.

Also, check the tire pressure of the spare tire.

How to check

Use a good quality gauge to check tire pressure. You cannot tell if your tires are properly inflated simply by looking at them. Radial tires may look properly inflated even when they're underinflated.

Remove the valve cap from the tire valve stem. Press the tire gauge firmly onto the valve to get a pressure measurement. If the cold tire inflation pressure matches the recommended pressure on the tire and loading information label, no further adjustment is necessary. If the pressure is low, add air until you reach the recommended amount.

If you overfill the tire, release air by pushing on the metal stem in the center of the tire valve. Recheck the tire pressure with the tire gauge. Be sure to put the valve caps back on the valve stems.

Without the valve cap, dirt or moisture could get into the valve core and cause air leakage. If a valve cap is missing, install a new one as soon as possible.

- Inspect your tires frequently for proper inflation as well as wear and damage. Always use a tire pressure gauge.
- Tires with too much or too little pressure can cause tires to wear unevenly, causing poor handling, loss of vehicle control and sudden tire failure leading to accidents, injuries, and even death. The recommended cold tire pressure for your vehicle can be found in this manual and on the tire label located on the driver's side center pillar.
- Remember to check the pressure of your spare tire. Kia recommends that you check the spare every time you check the pressure of the other tires on your vehicle.

Tire rotation

To equalize tread wear, it is recommended that the tires be rotated every 12,000 km (7,500 miles) or sooner if irregular wear develops.

During rotation, check the tires for correct balance.

When rotating tires, check for uneven wear and damage. Abnormal wear is usually caused by incorrect tire pressure, improper wheel alignment, out-of-balance wheels, severe braking or severe cornering. Look for bumps or bulges in the tread or side of the tire. Replace the tire if you find either of these conditions. Replace the tire if fabric or cord is visible. After rotation, be sure to bring the front and rear tire pressures to specification and check lug nut tightness.

Refer to the “Ties and wheels” section in Chapter 8.

Without a spare tire

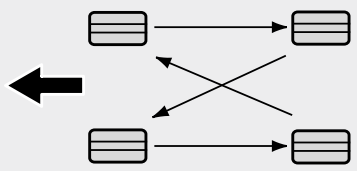

S2BLA790A

Directional tires (if equipped)

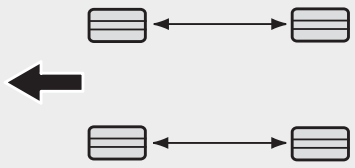

CBGQ0707A

Disc brake pads should be inspected for wear whenever tires are rotated.

Rotate radial tires that have an asymmetric tread pattern only from front to rear and not from right to left.

⚠ WARNING - Mixing tires

- **Do not use the compact spare tire (if equipped) for tire rotation.**
- **Do not mix bias ply and radial ply tires under any circumstances. This may cause unusual handling characteristics.**

Wheel alignment and tire balance

The wheels on your vehicle were aligned and balanced carefully at the factory to give you the longest tire life and best overall performance.

In most cases, you will not need to have your wheels aligned again. However, if you notice unusual tire wear or your vehicle pulling one way or the other, the alignment may need to be reset.

If you notice your vehicle vibrating when driving on a smooth road, your wheels may need to be rebalanced.

⚠ CAUTION - Wheel weight

Improper wheel weights can damage your vehicle's aluminum wheels. Use only approved wheel weights.

Tire replacement

If the tire is worn evenly, a tread wear Indicator (A) will appear as a solid band across the tread. This shows there is less than 1.6 mm (1/16 inch) of tread left on the tire. Replace the tire when this happens.

Do not wait for the band to appear across the entire tread before replacing the tire.

The ABS works by comparing the speed of the wheels. The tire size affects wheel speed. When replacing tires, all 4 tires must use the same size originally supplied with the vehicle. Using tires of a different size can cause the ABS (Anti-lock Brake System) and ESC (Electronic Stability Control) to work irregularly.

✻ NOTICE

- **In order to maintain optimal driving performance, we recommend replacing tires with the same specification and type as originally installed in your vehicle. If not, driving performance could be altered.**
- **When replacing tires (or wheels), it is recommended to replace the two front or two rear tires (or wheels) as a pair.**
  Replacing just one tire can seriously affect your vehicle's handling.

Compact spare tire replacement

A compact spare tire has a shorter tread life than a regular size tire. Replace it when you can see the tread wear indicator bars on the tire. The replacement compact spare tire should be the same size and design tire as the one provided with your new vehicle and should be mounted on the same compact spare tire wheel. The compact spare tire is not designed to be mounted on a regular size wheel, and the compact spare tire wheel is not designed for mounting a regular size tire.

Wheel replacement

When replacing the metal wheels for any reason, make sure the new wheels are equivalent to the original factory units in diameter, rim width and offset.

A wheel that is not the correct size may adversely affect wheel and bearing life, braking and stopping abilities, handling characteristics, ground clearance, body-to-tire clearance, snow chain clearance, speedometer and odometer calibration, headlight aim and bumper height.

⚠ **CAUTION - Wheel**

Wheels that do not meet Kia's specifications may fit poorly and result in damage to the vehicle or unusual handling and poor vehicle control.

Tire traction

Tire traction can be reduced if you drive on worn tires, tires that are improperly inflated or on slippery road surfaces. Tires should be replaced when tread wear indicators appear. Slow down whenever there is rain, snow or ice on the road, to reduce the possibility of losing control of the vehicle.

Tire maintenance

In addition to proper inflation, correct wheel alignment helps to decrease tire wear. If you find a tire is worn unevenly, have your dealer check the wheel alignment.

When you have new tires installed, make sure they are balanced. This will increase vehicle ride comfort and tire life. Additionally, a tire should always be rebalanced if it is removed from the wheel.

Tire sidewall labeling

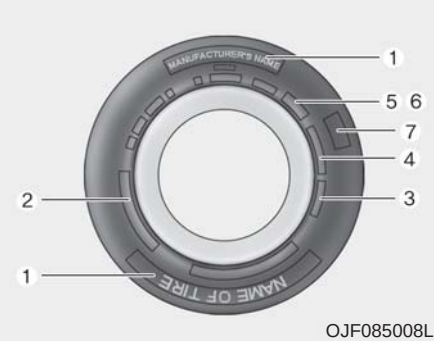

OJF085008L

This information identifies and describes the fundamental characteristics of the tire and also provides the tire identification number (TIN) for safety standard certification. The TIN can be used to identify the tire in case of a recall.

1. Manufacturer or brand name

Manufacturer or Brand name is shown.

2. Tire size designation

A tire's sidewall is marked with a tire size designation. You will need this information when selecting replacement tires for your car. The following explains what the letters and numbers in the tire size designation mean.

Example tire size designation:

(These numbers are provided as an example only; your tire size designator could vary depending on your vehicle.)

205/55R16 91H

205 - Tire width in millimeters.

55 - Aspect ratio. The tire's section height as a percentage of its width.

R - Tire construction code (Radial).

16 - Rim diameter in inches.

91 - Load Index, a numerical code associated with the maximum load the tire can carry.

H - Speed Rating Symbol. See the speed rating chart in this section for additional information.

Wheel size designation

Wheels are also marked with important information that you need if you ever have to replace one. The following explains what the letters and numbers in the wheel size designation mean.

Example wheel size designation:

6.5J X 16

6.5 - Rim width in inches.

J - Rim contour designation.

16 - Rim diameter in inches.

Tire speed ratings

The chart below lists many of the different speed ratings currently being used for passenger vehicles. The speed rating is part of the tire size designation on the sidewall of the tire. This symbol corresponds to that tire's designed maximum safe operating speed.

Speed Rating Symbol	Maximum Speed
S	180 km/h (112 mph)
T	190 km/h (118 mph)
H	210 km/h (130 mph)
V	240 km/h (149 mph)
W	270km/h (168 mph)
Y	300km/h (186 mph)

3. Checking tire life (TIN : Tire Identification Number)

Any tires that are over 6 years old, based on the manufacturing date, (including the spare tire) should be replaced by new ones. You can find the manufacturing date on the tire sidewall (possibly on the inside of the wheel), displaying the DOT Code. The DOT Code is a series of numbers on a tire consisting of numbers and English letters. The manufacturing date is designated by the last four digits (characters) of the DOT code.

DOT : XXXX XXXX OOOO

The front part of the DOT means a plant code number, tire size and tread pattern and the last four numbers indicate week and year manufactured.

For example:

DOT XXXX XXXX 1619 represents that the tire was produced in the 16th week of 2019.

⚠ WARNING - Tire age

Replace tires within the recommended time frame. Failure to replace tires as recommended can result in sudden tire failure, which could lead to a loss of control and an accident.

4. Tire ply composition and material

The number of layers or plies of rubber-coated fabric in the tire. Tire manufacturers also must indicate the materials in the tire, which include steel, nylon, polyester, and others. The letter "R" means radial ply construction; the letter "D" means diagonal or bias ply construction; and the letter "B" means belted-bias ply construction.

5. Maximum permissible inflation pressure

This number is the greatest amount of air pressure that should be put in the tire. Do not exceed the maximum permissible inflation pressure. Refer to the Tire and Loading Information label for recommended inflation pressure.

6. Maximum load rating

This number indicates the maximum load in kilograms and pounds that can be carried by the tire. When replacing the tires on the vehicle, always use a tire that has the same load rating as the factory installed tire.

7. Uniform tire quality grading

Quality grades can be found where applicable on the tire sidewall between tread shoulder and maximum section width.

For example:

TREADWEAR 440

TRACTION A

TEMPERATURE A

Tread wear

The tread wear grade is a comparative rating based on the wear rate of the tire when tested under controlled conditions on a specified government test course. For example, a tire graded 150 would wear one-and-a-half times (1½) as well on the government course as a tire graded 100.

The relative performance of tires depends upon the actual conditions of their use, however, and may depart significantly from the norm due to variations in driving habits, service practices and differences in road characteristics and climate.

Tires degrade over time, even when they are not being used. Regardless of the remaining tread, we recommend that tires be replaced after approximately six (6) years of normal service. Heat caused by hot climates or frequent high loading conditions can accelerate the aging process.

These grades are molded on the side-walls of passenger vehicle tires. The tires available as standard or optional equipment on your vehicles may vary with respect to grade.

Traction - AA, A, B & C

The traction grades, from highest to lowest, are AA, A, B and C. Those grades represent the tires ability to stop on wet pavement as measured under controlled conditions on specified government test surfaces of asphalt and concrete. A tire marked C may have poor traction performance.

The traction grade assigned to this tire is based on straight-ahead braking traction tests, and does not include acceleration, cornering, hydroplaning, or peak traction characteristics.

Temperature -A, B & C

The temperature grades are A (the highest), B and C, and represent the tire's resistance to the generation of heat and its ability to dissipate heat when tested under controlled conditions on a specified indoor laboratory test wheel.

Sustained high temperature can cause the material of the tire to degenerate and reduce tire life, and excessive temperature can lead to sudden tire failure. Grades B and A represent higher levels of performance on the laboratory test wheel than the minimum required by law.

Tire terminology and definitions

Air Pressure: The amount of air inside the tire pressing outward on the tire. Air pressure is expressed in kilopascal (kPa) or pounds per square inch (psi).

Accessory Weight: This means the combined weight of optional accessories. Some examples of optional accessories are, intelligent variable transmission, power seats, and air conditioning.

Aspect Ratio: The relationship of a tire's height to its width.

Belt: A rubber coated layer of cords that is located between the plies and the tread. Cords may be made from steel or other reinforcing materials.

Bead: The tire bead contains steel wires wrapped by steel cords that hold the tire onto the rim.

Bias Ply Tire: A pneumatic tire in which the plies are laid at alternate angles less than 90 degrees to the centerline of the tread.

Cold Tire Pressure: The amount of air pressure in a tire, measured in kilopascals (kPa) or pounds per square inch (psi), before a tire has built up heat from driving.

Curb Weight: This means the weight of a motor vehicle with standard and optional equipment, including the maximum capacity of fuel, oil and coolant, but without passengers and cargo.

DOT Markings: The DOT code includes the Tire Identification Number (TIN), an alphanumeric designator which can also identify the tire manufacturer, production plant, brand and date of production.

GVWR: Gross Vehicle Weight Rating

GAWR FRT: Gross Axle Weight Rating for the Front Axle.

GAWR RR: Gross Axle Weight Rating for the Rear axle.

Intended Outboard Sidewall: The side of an asymmetrical tire, that must always face outward when mounted on a vehicle.

Kilopascal (kPa): The metric unit for air pressure.

Light truck(LT) tire: A tire designated by its manufacturer as primarily intended for use on lightweight trucks or multipurpose passenger vehicles.

Load Index: An assigned number ranging from 1 to 279 that corresponds to the load carrying capacity of a tire.

Load ratings: The maximum load that a tire is rated to carry for a given inflation pressure.

Maximum Inflation Pressure: The maximum air pressure to which a cold tire may be inflated. The maximum air pressure is molded onto the sidewall.

Maximum Load Rating: The load rating for a tire at the maximum permissible inflation pressure for that tire.

Maximum Loaded Vehicle Weight: The sum of curb weight; accessory weight; vehicle capacity weight; and production options weight.

Normal Occupant Weight: The number of occupants a vehicle is designed to seat multiplied by 68kg (150 lbs.).

Occupant Distribution: Designated seating positions.

Outward Facing Sidewall: The side of a asymmetrical tire that has a particular side that faces outward when mounted on a vehicle. The outward facing sidewall bears white lettering or bears manufacturer, brand, and/or model name molding that is higher or deeper than the same moldings on the inner facing sidewall.

Passenger (P-Metric) Tire: A tire used on passenger cars and some light duty trucks and multipurpose vehicles.

Ply: A layer of rubber-coated parallel cords

Pneumatic tire: A mechanical device made of rubber, chemicals, fabric and steel or other materials, that, when mounted on an automotive wheel, provides the traction and contains the gas or fluid that sustains the load.

Production options weight: The combined weight of installed regular production options weighing over 5 lb.(2.3 kg) in excess of the standard items which they replace, not previously considered in curb weight or accessory weight, including heavy duty brakes, ride levelers, roof rack, heavy duty battery, and special trim.

Recommended Inflation Pressure: Vehicle manufacturer's recommended tire inflation pressure and shown on the tire placard.

Radial Ply Tire: A pneumatic tire in which the ply cords that extend to the beads are laid at 90 degrees to the centerline of the tread.

Rim: A metal support for a tire and upon which the tire beads are seated.

Sidewall: The portion of a tire between the tread and the bead.

Speed Rating: An alphanumeric code assigned to a tire indicating the maximum speed at which a tire can operate.

Traction: The friction between the tire and the road surface. The amount of grip provided.

Tread: The portion of a tire that comes into contact with the road.

Treadwear Indicators: Narrow bands, sometimes called "wear bars," that show across the tread of a tire when only 1.6 mm (1/16 inch) of tread remains.

UTQGS: Uniform Tire Quality Grading Standards, a tire information system that provides consumers with ratings for a tire's traction, temperature and treadwear. Ratings are determined by tire manufacturers using government testing procedures. The ratings are molded into the sidewall of the tire.

Vehicle Capacity Weight: The number of designated seating positions multiplied by 68kg (150 lbs.) plus the rated cargo and luggage load.

Vehicle Maximum Load on the Tire: Load on an individual tire due to curb and accessory weight plus maximum occupant and cargo weight.

Vehicle Normal Load on the Tire: Load on an individual tire that is determined by distributing to each axle its share of the curb weight, accessory weight, and normal occupant weight and driving by 2.

Vehicle Placard: A label permanently attached to a vehicle showing the original equipment tire size and recommended inflation pressure.

All season tires

Kia specifies all season tires on some models to provide good performance for use all year round, including snowy and icy road conditions. All season tires are identified by ALL SEASON and/or M+S (Mud and Snow) on the tire sidewall. Snow tires have better snow traction than all season tires and may be more appropriate in some areas.

Summer tires

Kia specifies summer tires on some models to provide superior performance on dry roads. Summer tire performance is substantially reduced in snow and ice. Summer tires do not have the tire traction rating M+S (Mud and Snow) on the tire side wall. If you plan to operate your vehicle in snowy or icy conditions, Kia recommends the use of snow tires or all season tires on all four wheels.

Snow tires

If you equip your car with snow tires, they should be the same size and have the same load capacity as the original tires. Snow tires should be installed on all four wheels; otherwise, poor handling may result.

Snow tires should carry 28 kPa (4 psi) more air pressure than the pressure recommended for the standard tires on the tire label on the driver's side of the center pillar, or up to the maximum pressure shown on the tire sidewall, whichever is less.

Do not drive faster than 120 km/h (75 mph) when your vehicle is equipped with snow tires.

⚠ WARNING

Do not use summer tires at temperatures below 7°C (45°F) or when driving on snow or ice. At temperatures below 7°C (45°F), summer tires can lose elasticity, and therefore traction and braking power as well. Change the tires on your vehicle to winter or all-weather tires of the same size as the standard tires of the vehicle. Both types of tires are identified by the M+S (Mud and Snow) marking. Using summer tires at very cold temperatures could cause cracks to form, thereby damaging the tires permanently.

Radial-ply tires

Radial-ply tires provide improved tread life, road hazard resistance and smoother high speed ride. The radial-ply tires used on this vehicle are of belted construction and are selected to complement the ride and handling characteristics of your vehicle.

Radial-ply tires have the same load carrying capacity as bias-ply or bias belted tires of the same size and use the same recommended inflation pressure. Mixing of radial-ply tires with bias-ply or bias belted tires is not recommended. Any combinations of radial-ply and bias-ply or bias belted tires when used on the same vehicle will seriously deteriorate vehicle handling. The best rule to follow is: identical radial-ply tires should always be used as a set of four.

Longer wearing tires can be more susceptible to irregular tread wear. It is very important to follow the tire rotation interval shown in this section to achieve the tread life potential of these tires. Cuts and punctures in radial-ply tires are repairable only in the tread area, because of sidewall flexing. Consult your tire dealer for radial-ply tire repairs.

Low aspect ratio tire (if equipped)

Low aspect ratio tires, whose aspect ratio is lower than 50, are provided for sporty looks.

Because the low aspect ratio tires are optimized for handling and braking, they may be more uncomfortable to ride in and more noisy when compared with normal tires.

⚠ CAUTION

Because the sidewall of a low aspect ratio tire is shorter than normal, the wheel and tire of a low aspect ratio tire is more easily damaged. Therefore, follow the instructions below.

- When driving on a rough road or off road, drive cautiously because the tires and wheels may become damaged. And after driving, inspect the tires and wheels.

- When passing over a pothole, speed bump, manhole, or curb stone, drive slowly so that the tires and wheels are not damaged.

- If the tire is impacted, we recommend that you inspect the tire condition or contact an authorized Kia dealer.

- To prevent damage to the tire, inspect the tire condition and pressure every 3,000 km

- Tire damage can be difficult to identify; therefore, in the event that the tire is impacted, it is recommended to have the tire checked or replaced to prevent potential air leakage.
- If the tire is damaged by driving on a rough road, off road, pothole, manhole, or curb stone, the damage will not be covered by the warranty.
- You can find out tire information on the tire sidewall.

FUSES

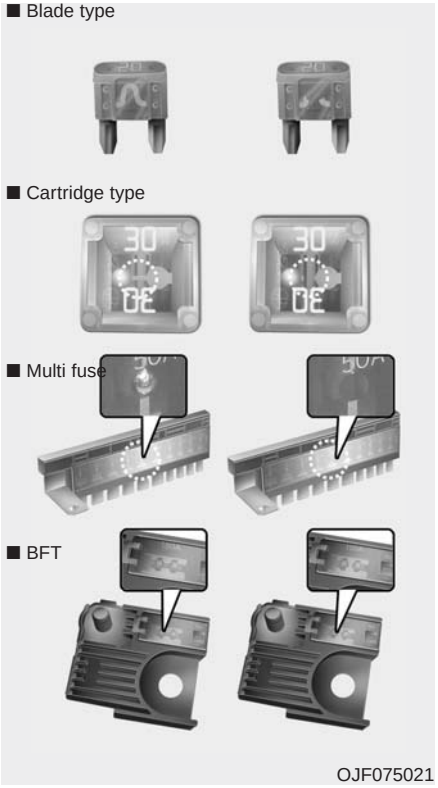

❊ Left side : Normal , Right side : Blown

A vehicle's electrical system is protected from electrical overload damage by fuses.

This vehicle has 2 (or 3) fuse panels, one located in the driver's side panel bolster, the other in the engine compartment near the battery.

If any of your vehicle's lights, accessories, or controls do not work, check the appropriate circuit fuse. If a fuse has blown, the element inside the fuse will melt.

If the electrical system does not work, first check the driver's side fuse panel.

If the replacement fuse blows, this indicates an electrical problem. Avoid using the system involved and immediately consult an authorized Kia dealer.

Three kinds of fuses are used: blade type for lower amperage rating, cartridge type, and multi fuse for higher amperage ratings.

⚠ WARNING - Fuse replacement

- **Never replace a fuse with anything but another fuse of the same rating.**
- **A higher capacity fuse could cause damage and possibly a fire.**
- **Never install a wire or aluminum foil instead of the proper fuse - even as a temporary repair. It may cause extensive wiring damage and a possible fire.**
- **Do not arbitrarily modify or add-on electric wiring to the vehicle.**

⚠ CAUTION

Do not use a screwdriver or any other metal object to remove fuses because it may cause a short circuit and damage the system.

✻ NOTICE

- When replacing a fuse, turn the ignition "OFF", turn off switches of all electrical devices, and then remove the battery (-) terminal.
- The actual fuse/relay panel label may differ from equipped items.

⚠ WARNING - Electrical Fire

Always ensure replacements fuses and relays are securely fastened when installed. Failure to do so can result in a vehicle fire.

⚠ CAUTION

- *When replacing a blown fuse or relay, make sure the new fuse or relay fits tightly into the clips. Failure to tightly install the fuse or relay may cause damage to the wiring and electric systems.*
- *Do not remove fuses, relays and terminals fastened with bolts or nuts. The fuses, relays and terminals may not be fastened correctly which may cause vehicle damage.*

⚠ CAUTION

- *Do not input any other objects, such as a screwdriver or wiring, except fuses or relays into the fuse/relay terminals.*
- *Do not plug in screwdrivers or aftermarket wiring into the terminal originally designed for fuse and relays only. The electrical system and wiring of the vehicle interior may be damaged or burned due to contact failure.*
- *If you directly connect the wire on the taillight or replace the bulb which is over the regulated capacity to install trailers etc., the inner junction block can get burned.*

⚠ CAUTION

Visually inspect the battery cap to ensure it is securely closed. If the battery cap is not securely closed, moisture may enter the system and damage the electrical components.

⚠ WARNING
- Electrical wiring repairs

All electrical repairs should be performed by authorized Kia dealerships using approved Kia parts. Using other wiring components, especially when retrofitting an Infotainment system or a theft alarm system, remote engine control, car phone or radio may cause vehicle damage and increase the risk of a vehicle fire.

✻ NOTICE - Remodeling Prohibited

Do not rewire your vehicle in any way as doing so may affect the performance of several safety features in your vehicle. Rewiring your vehicle may also void your warranty and cause you to be responsible for any subsequent vehicle damage which may result.

✻ NOTICE - Window tinting precaution

Window tint (especially metallic film) might cause communication errors or poor radio reception, and a malfunctioning automatic lighting system due to reflections from the mirror tint inside the vehicle. The tint installation solution used might also leak into the electronic components, causing malfunctions or damage.

Inner panel fuse replacement

1. Turn the ignition switch and all other switches off.
2. Open the fuse panel cover.

If the switch is located in the “OFF” position, a caution indicator will be displayed in the cluster.

To identify the location of a specific fuse, please refer to the inside of the fuse panel cover and the description list in this section.

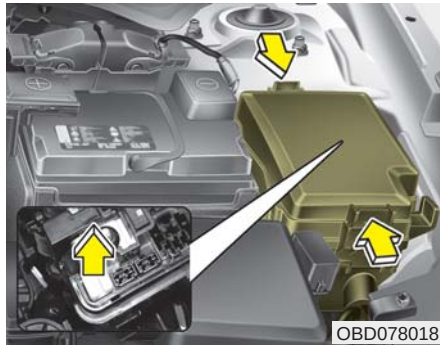
OBD078018

3. Pull the suspected fuse straight out. Use the removal tool provided on the engine compartment fuse panel cover.
4. Check the removed fuse; replace it if it is blown.

   Spare fuses are provided in the engine compartment fuse panel.
5. Push in a new fuse of the same rating, and make sure it fits tightly in the clips.

If it fits loosely, consult an authorized Kia dealer.

If you do not have a spare, use a fuse of the same rating from a circuit you may not need for operating the vehicle, such as the power outlet fuse.

If the head lamp, turn signal lamp, stop signal lamp, fog lamp, Daytime Running Lights (DRL), tail lamp, High mounted stop lamp (HMSL) do not work and the fuses are OK, check the fuse panel in the engine compartment. If a fuse is blown, it must be replaced.

✻ NOTICE

If the headlamp, fog lamp, turn signal lamp, or tail lamp malfunction even without any problem to the lamps, have the vehicle checked by an authorized Kia dealer for assistance.

Engine compartment fuse replacement

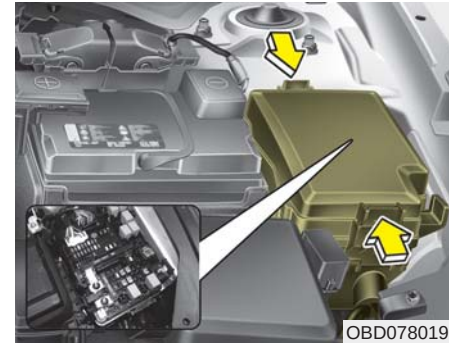
OBD078019

1. Turn the ignition switch and all other switches off.
2. Remove the fuse panel cover by pressing the tab and pulling the cover up.

3. Check the removed fuse; replace it if it is blown. To remove or insert the fuse, use the fuse puller in the engine compartment fuse panel.
4. Push in a new fuse of the same rating, and make sure it fits tightly in the clips. If it fits loosely, consult an authorized Kia dealer.

⚠ CAUTION

Always securely install the fuse panel cover in the engine compartment to protect against electrical failure which may occur from water contact. Listen for the audible clicking sound to ensure the fuse panel cover is securely fastened.

Multi fuse

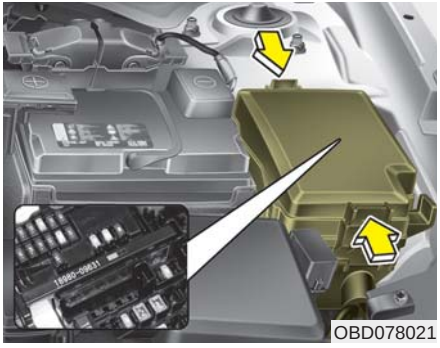

✻ NOTICE

Do not disassemble nor assemble a multi fuse when it is secured with nuts and bolts. Incorrect or partial assembly torque may cause a fire. Have the vehicle checked by an authorized Kia dealer.

Main fuse

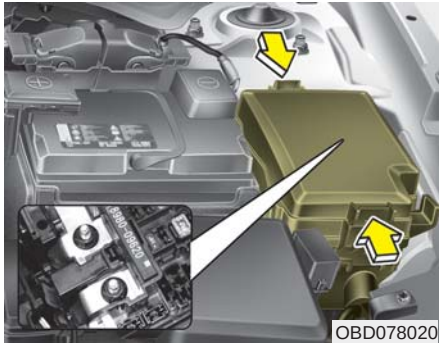

✻ NOTICE

Do not disassemble nor assemble a main fuse when it is secured with nuts and bolts. Incorrect or partial assembly torque may cause a fire. Have the vehicle checked by an authorized Kia dealer.

✻ NOTICE

The electronic system may not function correctly even when the engine compartment and internal fuse box's individual fuses are not disconnected. If this occurs, the cause of the problem may be disconnection of the main fuse (BFT type), which is located inside the positive battery terminal (+) cap.
Since the main fuse is designed more intricately than other parts, have the vehicle checked by an authorized Kia dealer.

Battery fuse

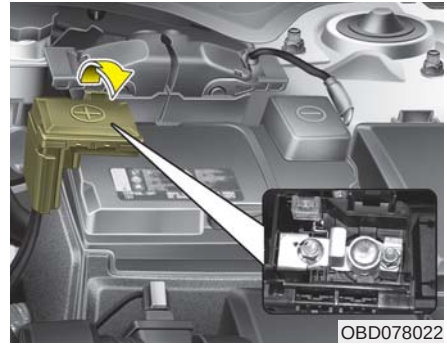

If the battery fuse is blown, it must be removed as follows:

1. Disconnect the negative battery cable.
2. Replace the fuse with a new one of the same rating.
3. Reinstall in the reverse order of removal.

⚠ CAUTION

Visually inspect the battery cap for secure closing. If the battery cap is not securely latched, the electrical system may be damaged due to influx of moisture into the system.

Fuse/relay panel description

Driver's side fuse panel

OBD078023

Inside the fuse/relay panel covers, you can find the fuse/relay label describing fuse/relay name and capacity.

✻ NOTICE

Not all fuse panel descriptions in this manual may be applicable to your vehicle. It is accurate at the time of printing. When you inspect the fuse panel in your vehicle, refer to the fuse panel label on the inside of the fuse cover. This diagram will provide you with the specific information for your vehicle.

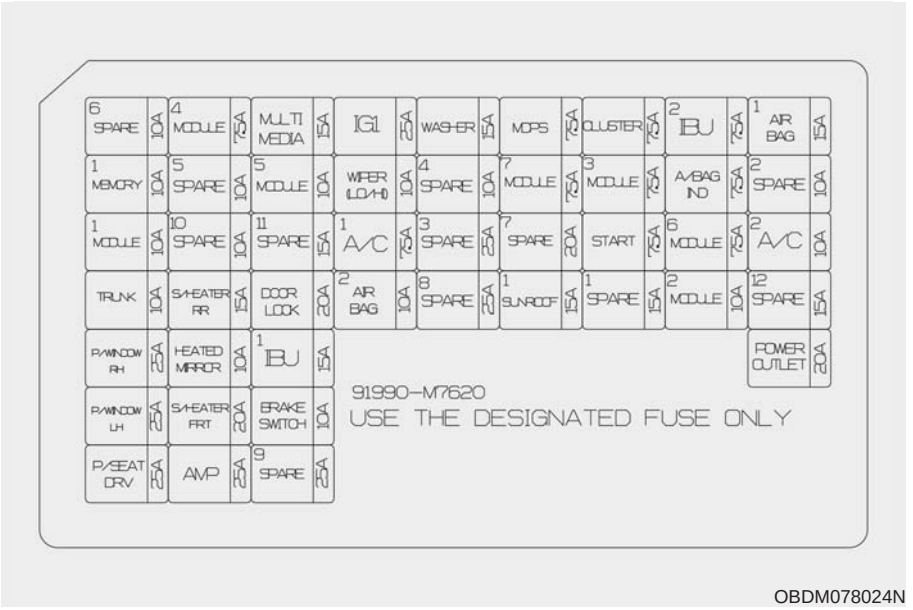

OBDM078024N

.

Instrument panel (Driver's side fuse panel)

Fuse Name	Fuse rating	Circuit Protected
MEMORY 1	10A	Driver IMS (Integrated memory system) Module,Air Conditioner Control Module, Instrument Cluster
MODULE 1	10A	Key Interlock Switch,Data Link Connector, Hazard Switch, Driver/Passenger Smart Key Outside Handle, ICM (Integrated Circuit Module) Relay Box (Outside Mirror Folding/Unfolding Relay), Mood_LP_Unit
TRUNK	10A	Trunk Relay
POWER WINDOW RH	25A	Power Window Right Handle side Relay
POWER WINDOW LH	25A	Power Window Left Handle side Relay, Driver Safety Power Window Module
POWER SEAT DRIVER	25A	Driver Seat Manual Switch
MODULE 4	7.5A	Lane Keeping Assist Unit, IBU (Integrated Body Control Unit), Forward Collision Avoidance Assist Unit, Blind-Spot Collision Warning Unit Left Handle side/Right Handle side
SEAT HEATER REAR	15A	Rear Seat Warmer Control Module
HEATED MIRROR	10A	Driver/Passenger Power Outside Mirror, Air Conditioner Control Module, ECM (Engine Control Module)/PCM (Power train Control Module)
SEAT HEATER FRONT	20A	Front Seat Warmer Control Module, Front Air Ventilation Seat Control Module
AMP	25A	AMP (Amplifier)
MULTI MEDIA	15A	Audio/Video & Navigation Head Unit

Fuse Name	Fuse rating	Circuit Protected
MODULE 5	10A	Crash Pad Switch, Head Lamp Left Handle side/Right Handle side, Auto Transmission Shift Lever Indicator, Electro Chromic Mirror, Audio/Video & Navigation Head Unit, Air Conditioner Control Module, Rear Seat Warmer Control Module, Front Seat Warmer Control Module, Front Air Ventilation Seat Control Module
DOOR LOCK	20A	Door Lock/Unlock Relay, ICM (Integrated Circuit Module) Relay Box (Two Turn Unlock Relay), Driver IMS (Intergrated memory system) Module
IBU 1	15A	IBU (Integrated Body Control Unit)
BRAKE SWITCH	10A	IBU (Integrated Body Control Unit), Stop Lamp Switch
IG1	25A	Engine Room Junction Block (Fuse - ABS 3, ECU 5, SENSOR 4, TCU 2)
WIPER (LO/HI)	10A	Engine Room Junction Block (Front Wiper (Low) Relay), Front Wiper Motor, ECM (Engine Control Module)/PCM (Power train Control Module), IBU (Integrated Body Control Unit)
AIR CONDITIONER1	7.5A	Engine Room Junction Block (Blower, PTC Heater), Air Conditioner Control Module
AIR BAG 2	10A	SRS (Supplemental Restraint System) Control Module
WASHER	15A	Multifunction Switch
MDPS	7.5A	MDPS (Motor Driven Power Steering) Unit
MODULE 7	7.5A	Rear Seat Warmer Control Module, Front Seat Warmer Control Module, Front Air Ventilation Seat Control Module
SUNROOF 1	15A	Sunroof Motor, ESG_Unit

Fuse Name	Fuse rating	Circuit Protected
CLUSTER	7.5A	Instrument Cluster
MODULE 3	7.5A	Sport Mode Switch, Stop Lamp Switch
START	7.5A	ICM (Integrated Circuit Module) Relay Box (Burglar Alarm Relay), Transmission Range Switch, IBU (Integrated Body Control Unit), ECM (Engine Control Module)/PCM (Power train Control Module), Engine Room Junction Block (Start)
IBU 2	7.5A	IBU (Integrated Body Control Unit)
AIR BAG INDICATOR	7.5A	Instrument Cluster, Air Conditioner Control Module
MODULE 6	7.5A	IBU (Integrated Body Control Unit)
MODULE 2	10A	Audio/Video & Navigation Head Unit, IBU (Integrated Body Control Unit), Rear USB Charger, Wireless Charger, AMP (Amplifier), Power Outside Mirror Switch, Engine Room Junction Block (Power Outlet)
AIR BAG 1	15A	SRS (Supplemental Restraint System) Control Module, Passenger Occupant Detection Sensor
AIR CONDITIONER 2	10A	Engine Room Junction Block (BLOWER Relay), Air Conditioner Control Module, Blower Resistor, Blower Motor
POWER OUTLET	20A	Cigarette Lighter

Engine compartment fuse panel

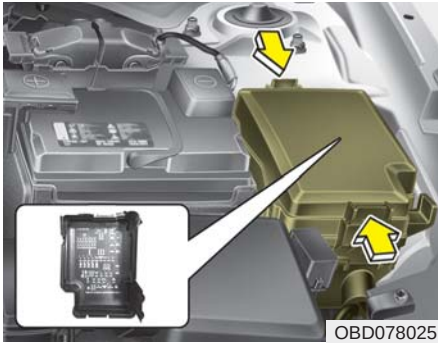
OBD078025

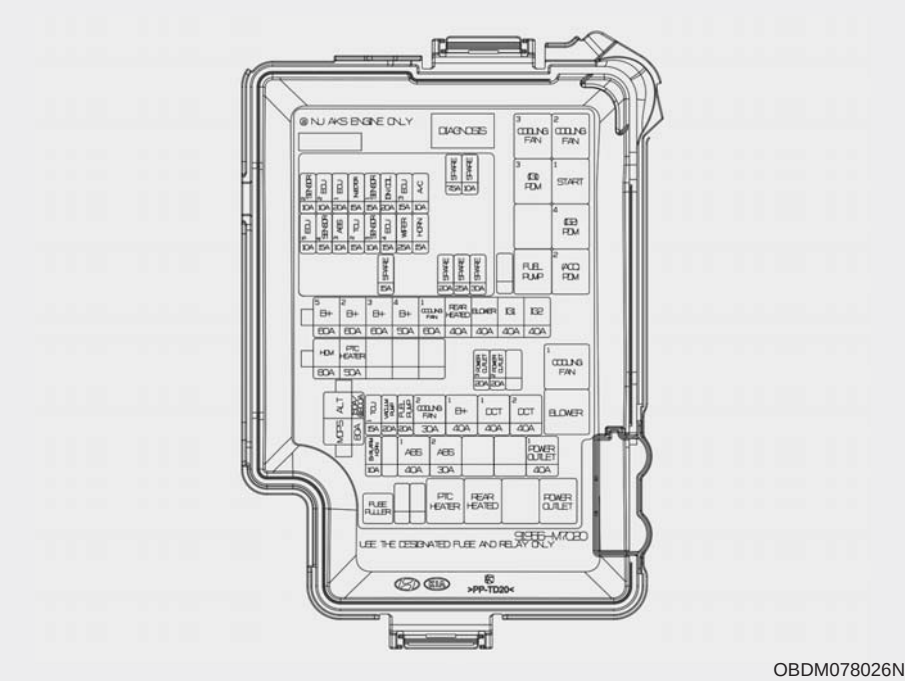

OBDM078026N

Engine room compartment fuse panel

Fuse Name		Fuse rating	Circuit Protected
MULTI FUSE-1	ALTERNATOR	200A (NU 2.0L AKS) 150A (GAMMA 1.6L T-GDI)	Fuse : BURGLAR ALARM, ABS1, ABS2, POWER OUTLET1, Alternator
	MDPS	80A	MDPS (Motor Driven Power Steering) Unit
MULTI FUSE-2	B+5	60A	Fuse : ECU 3, ECU 4, HORN, WIPER, A/C, Engine Control Relay
	B+2	60A	Instrument Panel Junction Block
	B+3	60A	Instrument Panel Junction Block
	B+4	50A	Instrument Panel Junction Block (Fuse : POWER WINDOW LH, POWER WINDOW RH, TRUNK, SUNROOF 1, SEAT HEATER FRONT, AMP, POWER SEAT DRIVER)
	COOLING FAN 1	60A	[GAMMA 1.6L T-GDI] Cooling Fan 1 Relay
	REAR HEATED	40A	Rear Heated Relay
	BLOWER	40A	BLOWER Relay
	IG1	40A	Ignition Switch, PDM #2 (ACC) Relay, PDM #3 (IG1) Relay
	IG2	40A	Ignition Switch, PDM #4 (IG2) Relay, START Relay
MULTI FUSE-3	PTC HEATER	50A	PTC Heater Relay

Engine room compartment fuse panel

Fuse Name		Fuse rating	Circuit Protected
FUSE	POWER OUTLET 2	20A	Front Power Outlet
	TCU 1	15A	[GAMMA 1.6L T-GDI] TCM (Transmission Control Module)
	VACUUM PUMP	20A	[GAMMA 1.6L T-GDI] Vacuum Pump
	FUEL PUMP	20A	Fuel Pump Relay
	COOLING FAN 2	30A	[NU 2.0L AKS] Cooling Fan 2 Relay, Cooling Fan 3 Relay
	B+1	40A	Instrument Panel Junction Block (Long Term Load Latch Relay, Fuse : (BRAKE SWITCH, IBU 1, AIR BAG 2, DOOR LOCK, SEAT HEATER REAR, MODULE 1))
	DCT 1	40A	[GAMMA 1.6L T-GDI] TCM (Transmission Control Module)
	DCT 2	40A	[GAMMA 1.6L T-GDI] TCM (Transmission Control Module)
	ABS 1	40A	ABS (Anti-lock brake system) Module, ESC (Electronic Stability Control) Module
	ABS 2	30A	ABS (Anti-lock brake system) Module, ESC (Electronic Stability Control) Module
	POWER OUTLET 1	40A	Power Outlet Relay
	SENSOR 2	10A	[NU 2.0L AKS] Purge Control Solenoid Valve, Oil Control Valve #1/#2/#3, Canister Close Valve, Mass Air Folw Sensor, A/Con Relay, E/R Junction Block (Cooling Fan Relay 1), Variable Intake Sensor [GAMMA 1.6L T-GDI] Purge Control Solenoid Valve, Oil Control Valve #1/#2, Canister Close Valve, RCV Control Solenoid Valve, E/R Junction Block (Cooling Fan Relay 1)
	ECU 2	10A	[GAMMA 1.6L T-GDI] ECM (Engine Control Module)
	ECU 1	20A	[NU 2.0L AKS] PCM (Power train Control Module) [GAMMA 1.6L T-GDI] ECM (Engine Control Module)
	INJECTOR	15A	[NU 2.0L AKS] Injector #1~#4

Fuse Name		Fuse rating	Circuit Protected
FUSE	SENSOR 1	15A	[NU 2.0L AKS] Oxygen Sensor (Up), Oxygen Sensor (Down) [GAMMA 1.6L T-GDI] Oxygen Sensor (Up), Oxygen Sensor (Down)
	IGN COIL	20A	[NU 2.0L AKS] Ignition Coil #1~#4 [GAMMA 1.6L T-GDI] Ignition Coil #1~#4
	ECU 3	15A	[NU 2.0L AKS] PCM (Power train Control Module) [GAMMA 1.6L T-GDI] ECM (Engine Control Module)
	A/CON COMP	10A	[NU 2.0L AKS] A/Con Relay
	ECU 5	10A	[NU 2.0L AKS] PCM (Power train Control Module) [GAMMA 1.6L T-GDI] ECM (Engine Control Module)
	SENSOR 4	15A	[GAMMA 1.6L T-GDI] Vacuum Pump
	ABS 3	10A	ABS (Anti-lock brake system) Module, ESC (Electronic Stability Control) Module
	TCU 2	15A	[NU 2.0L AKS] Transmission Range Switch [GAMMA 1.6L T-GDI] Transmission Range Switch, TCM
	SENSOR 3	10A	[NU 2.0L AKS] Fuel Pump Relay [GAMMA 1.6L T-GDI] Fuel Pump Relay
	ECU 4	15A	[NU 2.0L AKS] PCM (Power train Control Module) [GAMMA 1.6L T-GDI] ECM (Engine Control Module)
	WIPER	25A	[NU 2.0L AKS] Wiper Relay [GAMMA 1.6L T-GDI] Wiper Relay
	HORN	15A	[NU 2.0L AKS] Horn Relay [GAMMA 1.6L T-GDI] Horn Relay

Relay

Relay Name	Type
COOLING FAN 3 Relay	MICRO
COOLING FAN 2 Relay	MICRO
PDM 3 (IG1) Relay	MICRO
START Relay	MICRO
PDM 4 (IG2) Relay	MICRO
FUEL PUMP Relay	MICRO
PDM 2 (ACC) Relay	MICRO
COOLING FAN 1 Relay	MINI
BLOWER Relay	MINI
PTC HEATER Relay	MICRO
REAR HEATED Relay	MICRO
POWER OUTLET Relay	MICRO

Engine compartment fuse panel (Battery terminal cover)

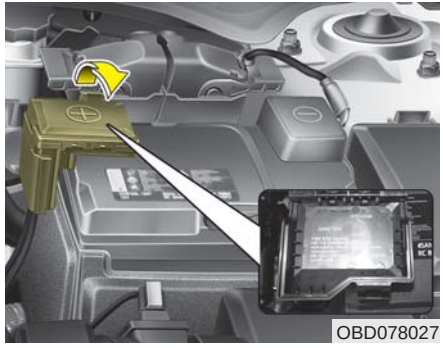

✻ NOTICE

Not all fuse panel descriptions in this manual may be applicable to your vehicle. It is accurate at the time of printing. When you inspect the fuse panel in your vehicle, refer to the fuse panel label.

LIGHT BULBS

Bulb replacement precaution

Please keep extra bulbs on hand with appropriate wattage ratings in case of emergencies.

Refer to the "Bulb Wattage" section in Chapter 8.

When changing lamps, first turn off the engine at a safe place, firmly apply the parking brake and detach the battery's negative (-) terminal.

⚠ WARNING - Working on the lights

Prior to working on the light, firmly apply the parking brake, ensure that the ignition switch is turned to the LOCK position and turn off the lights to avoid sudden movement of the vehicle, burns to your skin for fingers, or an electric shock.

⚠ CAUTION - Light replacement

Be sure to replace the burned-out bulb with one of the same wattage rating. Otherwise, it may cause damage to the fuse or electric wiring system.

⚠ CAUTION - Headlamp Lens

To prevent damage, do not clean the headlamp lens with chemical solvents or strong detergents.

- **Lamp part malfunction due to net-work failure**

The headlamp, taillight, and fog light may light up when the head lamp switch is turned ON, and not light up when the taillight or for light switch is turned ON. This may be cause by network failure or vehicle electrical control system malfunction. If there is a problem, we recommend the system be serviced by an authorized Kia dealer.

- **Lamp part malfunction due to electrical control system stabilization**

A normally functioning lamp may flicker momentarily. This momentary occurrence is due to the stabilization function of the vehicle's electrical control system. If the lamp stops flickering after a few moments, the vehicle does not require service.

However, if the lamp goes out after the momentary flickering, or the flickering continues, we recommend the system be serviced by an authorized Kia dealer.

✻ NOTICE

- **If the light bulb or lamp connector is removed while the lamp is still on, the fuse box's electronic system may log it as a malfunction. Therefore, a lamp malfunction incident may be recorded as a Diagnostic Trouble Code (DTC) in the fuse box.**
- **It is normal for an operating lamp to flicker momentarily. This is due to a stabilization function of the vehicle's electronic control device. If the lamp lights up normally after momentarily blinking, then it is functioning as normal. However, if the lamp continues to flicker several times or turns off completely, there may be an error in the vehicle's electronic control device. Please have the vehicle checked by an authorized Kia dealer immediately.**

✻ NOTICE

We recommend that the headlight aiming be adjusted after an accident or after the headlight assembly is reinstalled at an authorized Kia dealer.

✻ NOTICE

After driving in heavy rain or washing the vehicle, headlamp and taillight lenses could appear frosty. This condition is caused by the temperature difference between the lamp inside and outside. This is similar to the condensation on your windows inside your vehicle during the rain and doesn't indicate a problem with your vehicle. If the water leaks into the lamp bulb circuitry, we recommend that you have the vehicle checked by an authorized Kia dealer.

If you don't have the necessary tools, the correct bulbs and the expertise, consult an authorized Kia dealer. In many cases, it is difficult to replace vehicle light bulbs because other parts of the vehicle must be removed before you can get to the bulb. This is especially true if you have to remove the headlamp assembly to get to the bulb(s).

Removing/installing the headlamp assembly can result in damage to the vehicle.

If non-genuine parts or substandard bulbs are used, it may lead to blowing a fuse or other wiring damages.

Do not install extra lamps or LEDs to the vehicle. If additional lights are installed, it may lead to lamp malfunctions and flickering. Additionally, the fuse box and other wiring may be damaged.

Light bulb position (Front)

■ Head lamp - Type A

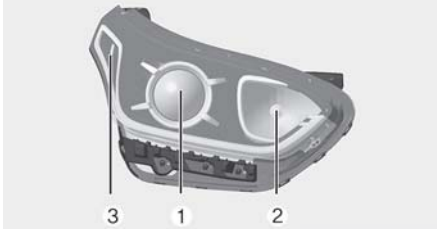

OBDM078028N

■ Head lamp - Type B

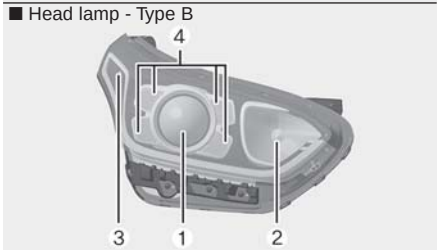

OBDM078029N

■ Head lamp – Type C

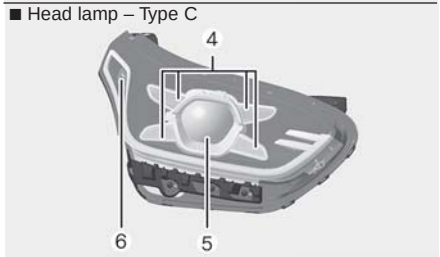

OBDM078030N

■ Front turn signal lamp

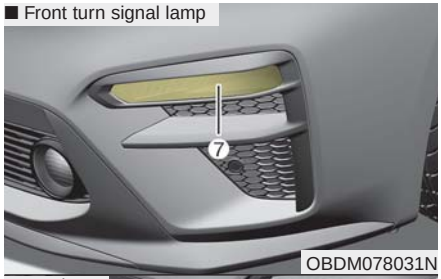

OBDM078031N

■ Fog lamp

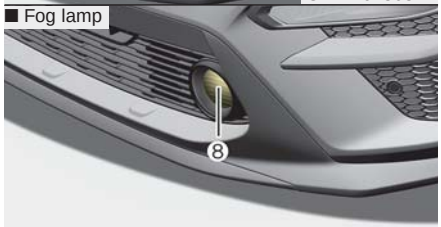

OBDM078032N

■ Day time running lamp

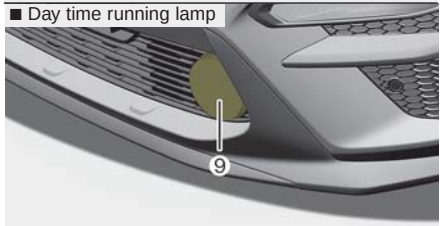

OBDM079190N

(1) Headlamp (Low) (Bulb type)
(2) Headlamp (High) (Bulb type)
(3) Side marker (Bulb type)
(4) Day time running lamp / Position lamp (LED type)
(5) Headlamp (Low/High) (LED type)
(6) Side marker (LED type)
(7) Front turn signal lamp (Bulb type)
(8) Front fog lamp (Bulb type)
(9) Day time running lamp (Bulb type)

Light bulb position (Rear)

■ Rear combination lamp - Type A

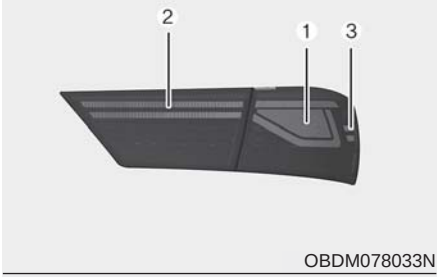

■ Rear combination lamp - Type B

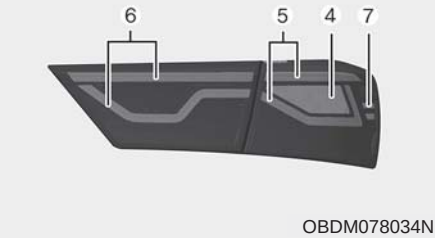

(1) Stop and tail lamp (Bulb type)
(2) Tail lamp (Bulb type)
(3) Side marker (Bulb type)
(4) Stop lamp (LED type)
(5,6) Tail lamp (LED type)
(7) Side marker (LED type)

■ Rear turn signal lamp / Back up lamp

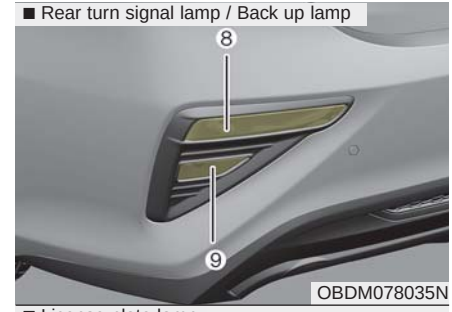

■ License plate lamp

(8) Rear turn signal lamp (Bulb type)
(9) Back Up lamp (Bulb type)
(10) License plate lamp (Bulb type)

■ High mounted stop lamp

(11) High mounted stop lamp
(Bulb or LED type)

Light bulb position (Side)

■ Type A

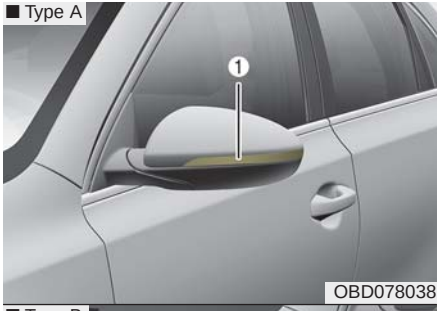

■ Type B

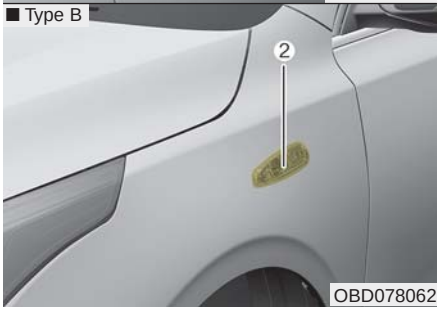

(1) Side repeater lamp (LED type)
(2) Side repeater lamp (bulb type)

Headlamp (Low beam) bulb replacement (Headlamp Type A,B)

1. Open the hood.
2. Remove the headlamp bulb cover by turning it counterclockwise.
3. Disconnect the headlamp bulb socket-connector.
4. Remove the bulb-socket from the headlamp assembly by turning the bulb-socket counterclockwise until the tabs on the bulb-socket align with the slots on the headlamp assembly.

5. Install a new bulb-socket assembly in the headlamp assembly by aligning the tabs on the bulb-socket with the slots in the headlamp assembly. Push the bulb-socket into the headlamp assembly and turn the bulb-socket clockwise.
6. Connect the headlamp bulb socket-connector.
7. Install the headlamp bulb cover by turning it clockwise.

Headlamp bulb

⚠ WARNING - Halogen bulbs

- **Halogen bulbs contain pressurized gas that will produce flying pieces of glass if broken.**

(Continued)

(Continued)

- **Always handle them carefully, and avoid scratches and abrasions. If the bulbs are lit, avoid contact with liquids. Never touch the glass with bare hands. Residual oil may cause the bulb to overheat and burst when lit.**

  A bulb should be operated only when installed in a headlight.
- **If a bulb becomes damaged or cracked, replace it immediately and carefully dispose of it.**
- **Wear eye protection when changing a bulb. Allow the bulb to cool down before handling it.**

Headlamp (High beam) bulb replacement (Headlamp Type A,B)

OBDM078040N

1. Open the hood.
2. Remove the headlamp bulb cover by turning it counterclockwise.
3. Remove the bulb-socket from the headlamp assembly by turning the bulb-socket counterclockwise until the tabs on the bulb-socket align with the slots on the headlamp assembly.
4. Remove the bulb from bulb-socket by pulling it out.
5. Insert a new bulb by inserting it into the bulb-socket.
6. Install the bulb-socket in the headlamp assembly by aligning the tabs on the bulb-socket with the slots in the headlamp assembly. Push the bulb-socket into the headlamp assembly and turn the bulb-socket clockwise.
7. Install the headlamp bulb cover by turning it clockwise.

Headlamp bulb

OHD076046

⚠ WARNING - Halogen bulbs

- **Halogen bulbs contain pressurized gas that will produce flying pieces of glass if broken.**

(Continued)

(Continued)

- **Always handle them carefully, and avoid scratches and abrasions. If the bulbs are lit, avoid contact with liquids. Never touch the glass with bare hands. Residual oil may cause the bulb to overheat and burst when lit.**

  A bulb should be operated only when installed in a headlight.
- **If a bulb becomes damaged or cracked, replace it immediately and carefully dispose of it.**
- **Wear eye protection when changing a bulb. Allow the bulb to cool down before handling it.**

Side marker bulb replacement (Headlamp Type A,B)

1. Open the hood.
2. Remove the bulb-socket from the headlamp assembly by turning the bulb-socket counterclockwise until the tabs on the bulb-socket align with the slots on the headlamp assembly.
3. Remove the bulb from the bulb-socket by pulling it out.
4. Insert a new bulb by inserting it into the bulb-socket.
5. Install the bulb-socket in the head lamp assembly by aligning the tabs on the bulb-socket with the slots in the headlamp assembly. Push the bulb-socket into the headlamp assembly and turn the bulb-socket clockwise.

Position lamp / Day time running lamp (LED type) replacement (Headlamp Type B)

OBDM078041N

If the position lamp + DRL (LED) (1) does not operate, have the vehicle checked by an authorized Kia dealer.

The LED lamp cannot be replaced as a single component because it is an integrated unit. The LED lamp has to be replaced with the unit.

A skilled technician should check or repair the position lamp + DRL (LED), for it may damage related parts of the vehicle.

Headlamp (LED type) replacement (Headlamp Type C)

OBDM078042N

If the Low/High beam lamp(1), Day time running lamp/Position lamp(2), side marker(3) do not operate, have the vehicle checked by an authorized Kia dealer.

The LED lamp cannot be replaced as a single component because it is an integrated unit. The LED lamp has to be replaced with the unit.

A skilled technician should check or repair the head lamp (LED), for it may damage related parts of the vehicle.

Front turn signal lamp bulb replacement

OBD078043

If the front turn signal lamp (1) does not operate, have the vehicle checked by an authorized Kia dealer.

Front fog lamp bulb replacement

OBD078044

If the front fog lamp (1) does not operate, have the vehicle checked by an authorized Kia dealer.

Day time running lamp (Bulb type) replacement

OBDM079192N

If the Day time running lamp (DRL) (1) does not operate, have the vehicle checked by an authorized Kia dealer.

Side repeater lamp (LED type) bulb replacement

OBD078038

If the side repeater lamp (LED) (1) does not operate, have the vehicle checked by an authorized Kia dealer.

The LED lamp cannot be replaced as a single component because it is an integrated unit. The LED lamp has to be replaced with the unit.

A skilled technician should check or repair the side repeater lamp (LED), for it may damage related parts of the vehicle.

Side repeater lamp (Bulb type) bulb replacement

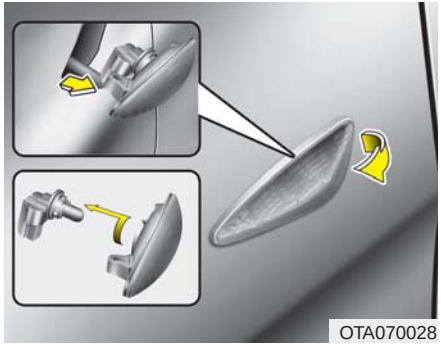
OTA070028

1. Remove the lamp assembly from the vehicle by prying the lens and pulling the assembly out.
2. Disconnect the bulb electrical connector.
3. Separate the socket and the lens parts by turning the socket counterclockwise until the tabs on the socket align with the slots on the lens part.
4. Remove the bulb by pulling it straight out.
5. Insert a new bulb in the socket.
6. Reassemble the socket and the lens part.
7. Connect the bulb electrical connector.
8. Reinstall the lamp assembly to the body of the vehicle.

Stop and tail lamp/side marker (Bulb type) bulb replacement (Rear combination lamp Type A)

OBD078045

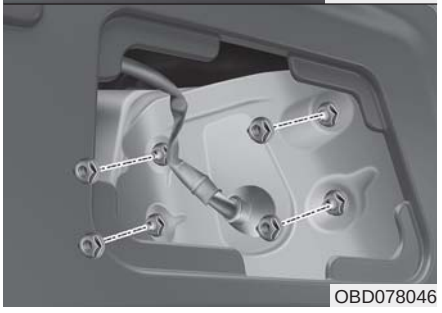
OBD078046

1. Open the trunk lid.
2. Open the service cover.
3. Remove the nuts from the vehicle.

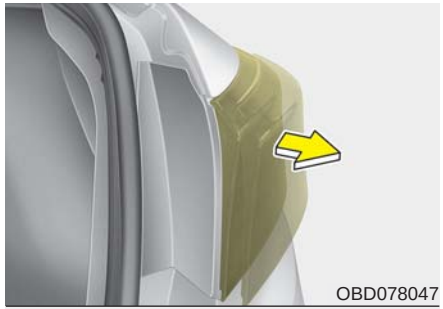
OBD078047

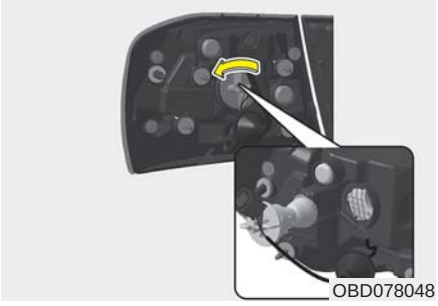
OBD078048

4. Remove the rear combination lamp assembly from the body of the vehicle.
5. Remove the socket from the assembly by turning the socket counterclockwise until the tabs on the socket align with the slots on the assembly.
6. Remove the bulb from the socket by pressing it in and rotating it counterclockwise until the tabs on the bulb align with the slots in the socket. Pull the bulb out of the socket.
7. Insert a new bulb by inserting it into the socket and rotating it until it locks into place.
8. Install the socket in the assembly by aligning the tabs on the socket with the slots in the assembly. Push the socket into the assembly and turn the socket clockwise.
9. Install the rear combination lamp assembly to the body of the vehicle.
10. Install the service cover.

Tail lamp (inside) (Bulb type) bulb replacement (Rear combination lamp Type A)

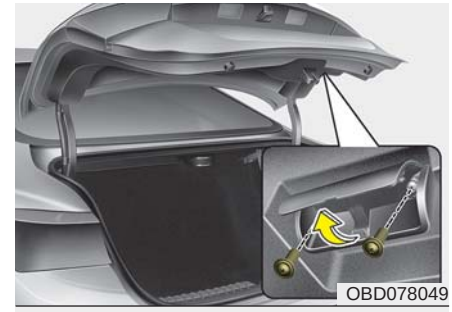
OBD078049

OBDM079170

1. Open the trunk lid.
2. Loosen the retaining screw of the trunk lid cover. Remove the trim mounting clip and take off the cover.

OBD078050

3. Remove the socket from the assembly by turning the socket counterclockwise until the tabs on the socket align with the slots on the assembly.
4. Remove the bulb from the socket by pressing it in and rotating it counterclockwise until the tabs on the bulb align with the slots in the socket. Pull the bulb out of the socket.
5. Insert a new bulb by inserting it into the socket and rotating it until it locks into place.
6. Install the socket in the assembly by aligning the tabs on the socket with the slots in the assembly. Push the socket into the assembly and turn the socket clockwise.
7. Install the trunk lid cover.

Stop and tail lamp (LED type) bulb replacement (Rear combination lamp Type B)

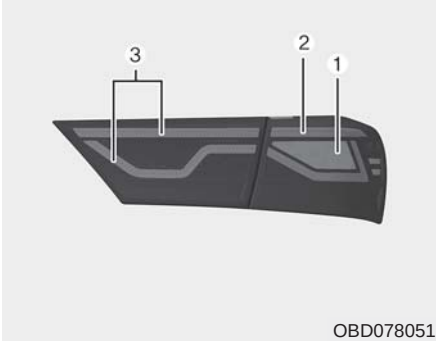

OBD078051

If the stop and tail lamp (LED) (1,2,3) does not operate, have the vehicle checked by an authorized Kia dealer.

The LED lamp cannot be replaced as a single component because it is an integrated unit. The LED lamp has to be replaced with the unit.

A skilled technician should check or repair the stop and tail lamp (LED), for it may damage related parts of the vehicle.

Side marker (LED type) bulb replacement (Rear combination lamp Type B)

OBDM078123N

If the side marker (LED) (1) does not operate, have the vehicle checked by an authorized Kia dealer.

The LED lamp cannot be replaced as a single component because it is an integrated unit. The LED lamp has to be replaced with the unit.

A skilled technician should check or repair the side marker (LED), for it may damage related parts of the vehicle.

Rear turn signal lamp bulb replacement

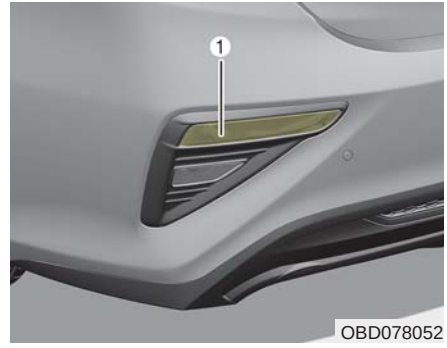

OBD078052

If the rear turn signal lamp (1) does not operate, have the vehicle checked by an authorized Kia dealer.

Back up lamp bulb replacement

OBD078053

If the back up lamp (1) does not operate, have the vehicle checked by an authorized Kia dealer.

High mounted stop lamp (LED type) bulb replacement

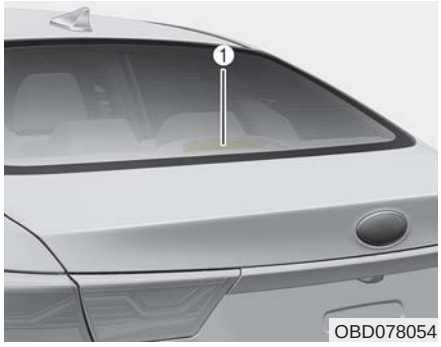

OBD078054

If the high mounted stop lamp (LED) (1) does not operate, have the vehicle checked by an authorized Kia dealer.

The LED lamp cannot be replaced as a single component because it is an integrated unit. The LED lamp has to be replaced with the unit.

A skilled technician should check or repair the high mounted stop lamp (LED), for it may damage related parts of the vehicle.

High mounted stop lamp (bulb type) bulb replacement

OND077039CN

1. Open the trunk lid.
2. Remove the socket from the assembly by turning the socket counterclockwise until the tabs on the socket align with the slots on the assembly.
3. Remove the bulb from the socket by pressing it in and rotating it counterclockwise until the tabs on the bulb align with the slots in the socket. Pull the bulb out of the socket.
4. Insert a new bulb by inserting it into the socket and rotating it until it locks into place.
5. Install the socket in the assembly by aligning the tabs on the socket with the slots in the assembly. Push the socket into the assembly and turn the socket clockwise.

License plate lamp bulb replacement

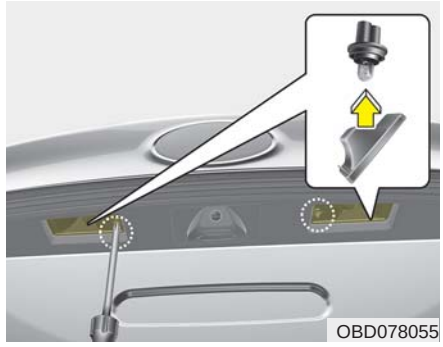
OBD078055

1. Remove the lamp assembly by using a flat-blade screwdriver.
2. Remove the socket from the assembly by turning the socket counterclockwise until the tabs on the socket align with the slots on the assembly.
3. Remove the bulb from bulb-socket by pulling it out.
4. Insert a new bulb by inserting it into the bulb-socket.
5. Install the socket in the assembly by aligning the tabs on the socket with the slots in the assembly. Push the socket into the assembly and turn the socket clockwise.
6. Install the lamp assembly to the body of the vehicle.

Map lamp (Bulb type) bulb replacement

OBD078119L

⚠ WARNING

Prior to working on the Interior lamps, ensure that the "OFF" button is depressed to avoid burning your fingers or receiving an electric shock.

1. Using a flat-blade screwdriver, gently pry the lens cover from lamp housing.
2. Remove the bulb by pulling it straight out.
3. Install a new bulb in the socket.
4. Align the lens cover tabs with the lamp housing notches and snap the lens into place.

⚠ CAUTION

Be careful not to dirty or damage the lens, lens tab, and plastic housings.

Map lamp (LED type) bulb replacement

OBD078057

If the map lamp (LED) (1) does not operate, have the vehicle checked by an authorized Kia dealer.

The LED lamp cannot be replaced as a single component because it is an integrated unit. The LED lamp has to be replaced with the unit.

A skilled technician should check or repair the map lamp (LED), for it may damage related parts of the vehicle.

Room lamp (Bulb type) bulb replacement

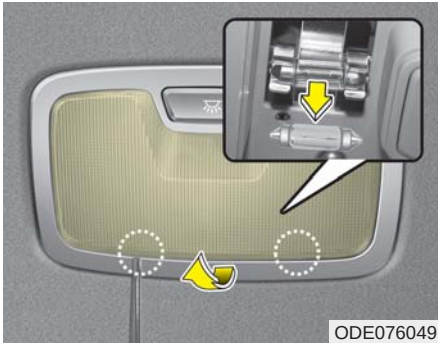
ODE076049

⚠ WARNING

Prior to working on the Interior lamps, ensure that the "OFF" button is depressed to avoid burning your fingers or receiving an electric shock.

1. Using a flat-blade screwdriver, gently pry the lens cover from lamp housing.
2. Remove the bulb by pulling it straight out.
3. Install a new bulb in the socket.
4. Align the lens cover tabs with the lamp housing notches and snap the lens into place.

⚠ CAUTION

Be careful not to dirty or damage the lens, lens tab, and plastic housings.

Room lamp (LED type) bulb replacement

ODEP077070

If the room lamp (LED) (1) does not operate, have the vehicle checked by an authorized Kia dealer.

The LED lamp cannot be replaced as a single component because it is an integrated unit. The LED lamp has to be replaced with the unit.

A skilled technician should check or repair the room lamp (LED), for it may damage related parts of the vehicle.

Vanity mirror lamp bulb replacement

OYB077106K

⚠ WARNING

Prior to working on the Interior lamps, ensure that the "OFF" button is depressed to avoid burning your fingers or receiving an electric shock.

1. Using a flat-blade screwdriver, gently pry the lamp assembly from interior.
2. Remove the bulb by pulling it straight out.
3. Install a new bulb in the socket.
4. Install the lamp assembly to interior.

⚠ CAUTION

Be careful not to dirty or damage the lens, lens tab, and plastic housings.

Glove box lamp replacement

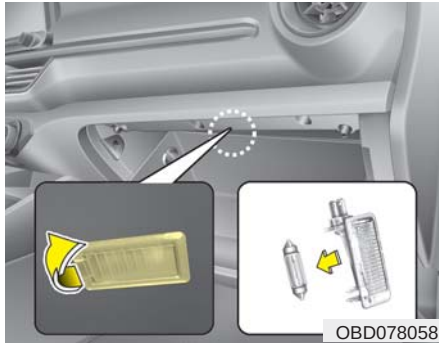

1. Using a flat-blade screwdriver, gently pry the lamp assembly from interior.
2. Remove the bulb by pulling it straight out.
3. Install a new bulb in the socket.
4. Install the lamp assembly to interior.

⚠ CAUTION

Be careful not to dirty or damage the lens, lens tab, and plastic housings.

Trunk room lamp replacement

1. Open the trunk lid.
2. Remove the lamp assembly by using a flat-blade screwdriver.
3. Remove the cover from the lamp assembly.
4. Remove the bulb by pulling it straight out.
5. Install a new bulb in the socket.
6. Install the cover to the lamp assembly.
7. Install the lamp assembly to the body of the vehicle.

⚠ CAUTION

Be careful not to dirty or damage the lens, lens tab, and plastic housings.

APPEARANCE CARE

Exterior care

Exterior general caution

It is very important to follow the label directions when using any chemical cleaner or polish. Read all warning and caution statements that appear on the label.

Finish maintenance

Washing

To help protect your vehicle's finish from rust and deterioration, wash it thoroughly and frequently at least once a month with lukewarm or cold water.

If you use your vehicle for off-road driving, you should wash it after each off-road trip. Pay special attention to the removal of any accumulation of salt, dirt, mud, and other foreign materials. Make sure the drain holes in the lower edges of the doors and rocker panels are kept clear and clean.

Insects, tar, tree sap, bird droppings, industrial pollution and similar deposits can damage your vehicle's finish if not removed immediately.

Even prompt washing with plain water may not completely remove all these deposits. A mild soap, safe for use on painted surfaces, may be used.

After washing, rinse the vehicle thoroughly with lukewarm or cold water. Do not allow soap to dry on the finish.

High-pressure washing

- When using high-pressure washers, make sure to maintain sufficient distance from the vehicle.

  Insufficient clearance or excessive pressure can lead to component damage or water penetration.
- Do not spray the camera, sensors or its surrounding area directly with a high pressure washer. Shock applied from high pressure water may cause the device to not operate normally.
- Do not bring the nozzle tip close to boots (rubber or plastic covers) or connectors as they may be damaged if they come into contact with high pressure water.

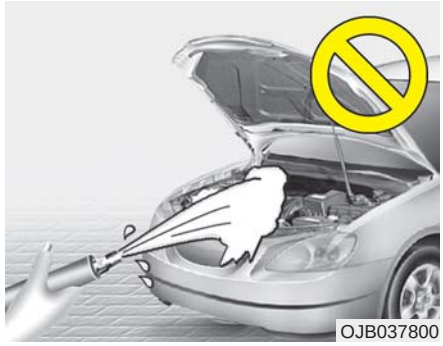
OJB037800

⚠ **CAUTION - Wet engine**

- ***Washing the engine compartment with water, including high pressure water, may cause the failure of electrical circuits located in the engine compartment.***
- ***Never allow water or other liquids to come in contact with electrical/electronic components inside the vehicle as this may damage them.***

⚠ **WARNING**

After washing the vehicle, test the brakes while driving slowly to see if they have been affected by water. If braking performance is impaired, dry the brakes by applying them lightly while maintaining a slow forward speed.

Waxing

Wax the vehicle when water will no longer bead on the paint.

Always wash and dry the vehicle before waxing. Use a good quality liquid or paste wax, and follow the manufacturer's instructions. Wax all metal trim to protect it and to maintain its luster.

Removing oil, tar, and similar materials with a spot remover will usually strip the wax from the finish. Be sure to re-wax these areas even if the rest of the vehicle does not yet need waxing.

Do not apply wax on an embossed unpainted unit, as it may tarnish the unit.

⚠ **CAUTION - Drying vehicle**

- ***Wiping dust or dirt off the body with a dry cloth will scratch the finish.***
- ***Do not use steel wool, abrasive cleaners, acid detergents or strong detergents containing high alkaline or caustic agents on chrome-plated or anodized aluminum parts. This may result in damage to the protective coating and cause discoloration or paint deterioration.***

Finish damage repair

Deep scratches or stone chips in the painted surface must be repaired promptly. Exposed metal will quickly rust and may develop into a major repair expense.

If your vehicle is damaged and requires any metal repair or replacement, be sure the body shop applies anti-corrosion materials to the parts repaired or replaced.

Bright-metal maintenance

- To remove road tar and insects, use a tar remover, not a scraper or other sharp object.
- To protect the surfaces of bright-metal parts from corrosion, apply a coating of wax or chrome preservative and rub to a high luster.
- During winter weather or in coastal areas, cover the bright metal parts with a heavier coating of wax or preservative. If necessary, coat the parts with non-corrosive petroleum jelly or other protective compound.

Underbody maintenance

Road salt and other corrosive chemicals are used in cold weather states to melt snow and prevent ice accumulation. If these chemicals are not regularly removed, they will corrode the vehicle underbody and over time damage fuel lines, the fuel tank retention system, the vehicle suspension, the exhaust system, and even the body frame.

- Wash the undercarriage of your vehicle regularly during the winter and whenever your vehicle has been exposed to such salts or chemicals.
- Do a thorough washing of the undercarriage at the end of the winter.
- Use professional service technicians or governmental inspection stations to annually inspect for corrosion.

- Immediately seek an inspection of your vehicle if you become visually aware of corrosion flaking or scaling or if you become aware of a change in vehicle performance, such as soft or spongey brakes, fluids leaking, impairment of directional control, suspension noises or rattling metal straps.

Aluminum wheel maintenance

The aluminum wheels are coated with a clear protective finish.

- Do not use any abrasive cleaner, polishing compound, solvent, or wire brushes on aluminum wheels. They may scratch the finish.
- Clean the wheel when it has cooled.
- Use only a mild soap or neutral detergent, and rinse thoroughly with water. Also, be sure to clean the wheels after driving on salted roads. This helps prevent corrosion.
- Avoid washing the wheels with highspeed vehicle wash brushes.
- Do not use any alkaline or acid detergents as they may damage or corrode aluminum wheels coated with a clear protective finish.

Corrosion protection

Protecting your vehicle from corrosion

By using the most advanced design and construction practices to combat corrosion, we produce vehicles of the highest quality. However, this is only part of the job. To achieve the long-term corrosion resistance your vehicle can deliver, the owner's cooperation and assistance is also required.

Common causes of corrosion

The most common causes of corrosion on your vehicle are:

- Road salt, dirt and moisture that is allowed to accumulate underneath the vehicle.
- Removal of paint or protective coatings by stones, gravel, abrasion or minor scrapes and dents which leave unprotected metal exposed to corrosion.

High-corrosion areas

If you live in an area where your vehicle is regularly exposed to corrosive materials, corrosion protection is particularly important. Some of the common causes of accelerated corrosion are road salts, dust control chemicals, ocean air and industrial pollution.

Moisture breeds corrosion

Moisture creates the conditions in which corrosion is most likely to occur. For example, corrosion is accelerated by high humidity, particularly when temperatures are just above freezing. In such conditions, the corrosive material is kept in contact with the vehicle's surface by moisture that evaporates slowly.

Mud is particularly corrosive because it dries slowly and holds moisture in contact with the vehicle. Although the mud appears to be dry, it can still retain the moisture and promote corrosion.

High temperatures can also accelerate corrosion of parts that are not properly ventilated so the moisture can be dispersed. For all these reasons, it is particularly important to keep your vehicle clean and free of mud or accumulations of other materials. This applies not only to the visible surfaces but particularly to the underside of the vehicle.

To help prevent corrosion

You can help prevent corrosion from beginning by observing the following:

Keep your vehicle clean

The best way to prevent corrosion is to keep your vehicle clean and free of corrosive materials. Attention to the underside of the vehicle is particularly important.

- If you live in a high-corrosion area — where road salts are used, near the ocean, areas with industrial pollution, acid rain, etc.—, you should take extra care to prevent corrosion. In winter, hose off the underside of your vehicle at least once a month and be sure to clean the underside thoroughly when winter is over.
- When cleaning underneath the vehicle, give particular attention to the components under the fenders and other areas that are hidden from view. Do a thorough job; just dampening the accumulated mud rather than washing it away will accelerate corrosion rather than prevent it. Water under high pressure and steam are particularly effective in removing accumulated mud and corrosive materials.

- When cleaning lower door panels, rocker panels and frame members, be sure that drain holes are kept open so that moisture can escape and not be trapped inside to accelerate corrosion.

Keep your garage dry

Don't park your vehicle in a damp, poorly ventilated garage. This creates a favorable environment for corrosion. This is particularly true if you wash your vehicle in the garage or drive it into the garage when it is still wet or covered with snow, ice or mud. Even a heated garage can contribute to corrosion unless it is well ventilated so moisture is dispersed.

Keep paint and trim in good condition

Scratches or chips in the finish should be covered with "touch-up" paint as soon as possible to reduce the possibility of corrosion. If bare metal is showing through, the attention of a qualified body and paint shop is recommended.

Bird droppings : Bird droppings are highly corrosive and may damage painted surfaces in just a few hours. Always remove bird droppings as soon as possible.

Don't neglect the interior

Moisture can collect under the floor mats and carpeting and cause corrosion. Check under the mats periodically to be sure the carpeting is dry. Use particular care if you carry fertilizers, cleaning materials or chemicals in the vehicle.

These should be carried only in proper containers and any spills or leaks should be cleaned up, flushed with clean water and thoroughly dried.

Interior care

Interior general precautions

Prevent chemicals such as perfume, cosmetic oil, sun cream, hand cleaner, and air freshener from contacting the interior parts because they may cause damage or discoloration. If they do contact the interior parts, wipe them off immediately. If necessary, use a vinyl cleaner; see product instructions for correct usage.

⚠ **CAUTION - Electrical components**

Never allow water or other liquids to come in contact with electrical/electronic components inside the vehicle as this may damage them.

⚠ **CAUTION - Leather**

When cleaning leather products (steering wheel, seats etc.), use neutral detergents or low alcohol content solutions. If you use high alcohol content solutions or acid/alkaline detergents, the color of the leather may fade or the surface may get stripped off.

Cleaning the upholstery and interior trim

Vinyl

Remove dust and loose dirt from vinyl with a whisk broom or vacuum cleaner. Clean vinyl surfaces with a vinyl cleaner.

Fabric

Remove dust and loose dirt from fabric with a whisk broom or vacuum cleaner. Clean with a mild soap solution recommended for upholstery or carpets. Remove fresh spots immediately with a fabric spot cleaner. If fresh spots do not receive immediate attention, the fabric can be stained and its color can be affected. Also, its fire-resistant properties can be reduced if the material is not properly maintained.

Using anything but recommended cleaners and procedures may affect the fabric's appearance and fire-resistant properties.

Cleaning the lap/shoulder belt webbing

Clean the belt webbing with any mild soap solution recommended for cleaning upholstery or carpet. Follow the instructions provided with the soap. Do not bleach or re-dye the webbing because this may weaken it.

Cleaning the interior window glass

If the interior glass surfaces of the vehicle become fogged (that is, covered with an oily, greasy or waxy film), they should be cleaned with a glass cleaner. Follow the directions on the glass cleaner container.

⚠ **CAUTION - Rear window**

Do not scrape or scratch the inside of the rear window. This may result in damage of the rear window defroster grid.

Taking care of leather seats (if equipped)

- Vacuum the seat periodically to remove dust and sand on the seat. It will prevent abrasion or damage of the leather and maintain its quality.
- Wipe the natural leather seat cover often with dry or soft cloth.
- Sufficient use of a leather protective may prevent abrasion of the cover and helps maintain the color.

  Be sure to read the instructions and consult a specialist when using leather coating or protective agents.
- Leather with bright colors(beige, cream beige) is easily contaminated and clear in appearance. Clean the seats frequently.
- Avoid wiping with a wet cloth. It may cause the surface to crack.

Cleaning the leather seats (if equipped)

- Remove all contaminations instantly. Refer to instructions below for removal of each contaminant.
- Cosmetic products(sunscreen, foundation, etc.)
  - Apply cleansing cream on a cloth and wipe the contaminated point. Wipe off the cream with a wet cloth and remove water with a dry cloth.
- Beverages(coffee, soft drink, etc.)
  - Apply a small amount of neutral detergent and wipe until contaminations do not smear.
- Oil
  - Remove oil instantly with absorbable cloth and wipe with stain remover for natural leather only.
- Chewing gum
  - Harden the gum with ice and remove gradually.

Fabric seat cover using precautions (if equipped)

Please clean the fabric seats regularly with a vacuum cleaner in consideration of fabric material characteristics. If they are heavily soiled with beverage stains, etc., use a suitable interior cleaner. To prevent damage to seat covers, wipe off the seat covers down to the seams with a large wiping motion and moderate pressure using a soft sponge or microfiber cloth.

Velcro closures on clothing or sharp objects may cause snagging or scratches on the surface of the seats. Make sure not to rub such objects against the surface.

EMISSION CONTROL SYSTEM

The emission control system of your vehicle is covered by a written limited warranty. Please see the warranty information contained in the Warranty & Consumer Information manual in your vehicle.

Your vehicle is equipped with an emission control system to meet all applicable emission regulations.

There are three emission control systems, as follows.

(1) Crankcase emission control system
(2) Evaporative emission control system
(3) Exhaust emission control system

In order to assure the proper function of the emission control systems, it is recommended that you have your vehicle inspected and maintained by an authorized Kia dealer in accordance with the maintenance schedule in this manual.

Caution for the Inspection and Maintenance Test (With Electronic Stability Control (ESC) system)

- **To prevent the vehicle from misfiring during dynamometer testing, turn the Electronic Stability Control (ESC) system off by pressing the ESC switch.**
- **After dynamometer testing is completed, turn the ESC system back on by pressing the ESC switch again.**

1. Crankcase emission control system

The positive crankcase ventilation system is employed to prevent air pollution caused by blow-by gases being emitted from the crankcase. This system supplies fresh filtered air to the crankcase through the air intake hose. Inside the crankcase, the fresh air mixes with blow-by gases, which then pass through the PCV valve into the induction system.

2. Evaporative emission control (including ORVR: Onboard Refueling Vapor Recovery) system

The Evaporative Emission Control System is designed to prevent fuel vapors from escaping into the atmosphere.

(The ORVR system is designed to allow the vapors from the fuel tank to be loaded into a canister while refueling at the gas station, preventing the escape of fuel vapors into the atmosphere.)

Canister

Fuel vapors generated inside the fuel tank are absorbed and stored in the onboard canister. When the engine is running, the fuel vapors absorbed in the canister are drawn into the surge tank through the purge control solenoid valve.

Purge Control Solenoid Valve (PCSV)

The purge control solenoid valve is controlled by the Engine Control Module (ECM); when the engine coolant temperature is low during idling, the PCSV closes so that evaporated fuel is not taken into the engine. After the engine warms up during ordinary driving, the PCSV opens to introduce evaporated fuel to the engine.

3. Exhaust emission control system

The Exhaust Emission Control System is a highly effective system which controls exhaust emissions while maintaining good vehicle performance.

Engine exhaust gas precautions (carbon monoxide)

- Carbon monoxide can be present with other exhaust fumes. Therefore, if you smell exhaust fumes of any kind inside your vehicle, have it inspected and repaired immediately. If you ever suspect exhaust fumes are coming into your vehicle, drive it only with all the windows fully open. Have your vehicle checked and repaired immediately.

⚠ WARNING - Exhaust

Engine exhaust gases contain carbon monoxide (CO). Though colorless and odorless, it is dangerous and could be lethal if inhaled. Follow the instructions on this page to avoid CO poisoning.

- Do not operate the engine in confined or closed areas (such as garages) any more than what is necessary to move the vehicle in or out of the area.
- When the vehicle is stopped in an open area for more than a short time with the engine running, adjust the ventilation system (as needed) to draw outside air into the vehicle.
- Never sit in a parked or stopped vehicle for any extended time with the engine running.
- When the engine stalls or fails to start, excessive attempts to restart the engine may cause damage to the emission control system.

Operating precautions for catalytic converters (if equipped)

⚠ WARNING - Catalytic converter

Keep away from the catalytic converter and exhaust system while the vehicle is running or immediately thereafter. The exhaust and catalytic systems are very hot and may burn you.

⚠ WARNING - Fire

- **Do not park, idle or drive the vehicle over or near flammable objects, such as grass, vegetation, paper, leaves, etc. A hot exhaust system can ignite flammable items under your vehicle.**
- **Also, do not remove the heat sink around the exhaust system, do not seal the bottom of the vehicle or do not coat the vehicle for corrosion control. It may present a fire risk under certain conditions.**

Your vehicle is equipped with a catalytic converter emission control device.

Therefore, the following precautions must be observed:

- Use only UNLEADED FUEL for gasoline engines.
- Do not operate the vehicle when there are signs of engine malfunction, such as misfire or a noticeable loss of performance.
- Do not misuse or abuse the engine. Examples of misuse are coasting with the ignition off and descending steep grades in gear with the ignition off.
- Do not operate the engine at high idle speed for extended periods (5 minutes or more).
- Do not modify or tamper with any part of the engine or emission control system. All inspections and adjustments must be made by an authorized Kia dealer.
- Avoid driving with an extremely low fuel level. Running out of fuel could cause the engine to misfire, damaging the catalytic converter.

Failure to observe these precautions could result in damage to the catalytic converter and to your vehicle. Additionally, such actions could void your warranties.

Specifications & Consumer information

Dimensions 8-2
Engine 8-3
Bulb wattage 8-4
Tires and wheels 8-5
Gross vehicle weight 8-7
Luggage volume 8-7
Air conditioning system 8-7
Recommended lubricants and capacities 8-8
• Recommended SAE viscosity number 8-10
Vehicle identification number (VIN) 8-11
Vehicle certification label 8-11
Tire specification and pressure label 8-11
Engine number 8-12

DIMENSIONS

Item		mm (in)
Overall length		4,640 (182.7)
Overall width		1,800 (70.9)
Overall height		1,435 (56.5)
Front tread	195/65R15	1,563 (61.5)
	205/55R16	1,555 (61.2)
	225/45R17	1,549 (61.0)
	225/40 R18	2,271 (89.4)
	225/40 ZR18	2,271 (89.4)
Rear tread	195/65R15	1,572 (61.9)
	205/55R16	1,564 (61.6)
	225/45R17	1,558 (61.3)
	225/40 R18	2,271 (89.4)
	225/40 ZR18	2,271 (89.4)
Wheelbase		2,700 (106.3)

ENGINE

Item	Nu 2.0L MPI	Gamma 1.6L T-GDI
Displacement cc (cu.in)	1,999 (121.9)	1,591 (97.08)
Bore x Stroke mm (in.)	81 x 97 (3.19 x 3.82)	77 x 85.44 (3.03 x 3.36)
Firing order	1-3-4-2	1-3-4-2
No. of cylinders	4, In-line	4, In-line

BULB WATTAGE

Light Bulb				Wattage (W)	Bulb type
Front	Head lamp	Low	Standard	60W	HB3LL
		High	Standard	55W	H7LL
	Daytime running light *			21W or LED	P21/5W or LED
	Position lamp *			5W or LED	P21/5W or LED
	Turn signal lamp			21W	PY21W
	Front fog lamp *			51W	HB4
Rear	Tail lamp		Inside	5W or LED	w5w or LED
			Outside	5W or LED	P21/5W or LED
	Stop lamp		Outside	21W or LED	P21/5W or LED
	Turn signal lamp			21W	PY21W
	Back up lamp			16W	W16W
	High mounted stop lamp			21W	P21W or LED
	License plate lamp			5W X 2EA	W5W
Interior	Map lamps *			10W X 2EA	W10W
	Room lamp			10W	FESTOON
	Luggage lamp			8W	FESTOON
	Glove box LAMP			8W	FESTOON
	Vanity mirror lamps *			5W	FESTOON

* If equipped

TIRES AND WHEELS

Item	Tire size	Wheel size	Load Capacity		Speed capacity		Inflation pressure [kPa (psi)]				Wheel lug nut torque Kgf·m (lbf·ft, N·m)
							Normal load *3		Maximum load		
			LI *1	Kg	SS *2	Km/h	Front	Rear	Front	Rear	
Full size tire	195/65R15	6.0J×15	91	615	H	210	230 (33)	230 (33)	230 (33)	230 (33)	11 ~ 13 (79 ~ 94, 107 ~ 127)
	205/55R16	6.5J×16	91	615	H	210	230 (33)	230 (33)	230 (33)	230 (33)	
	225/45R17	7.0J×17	91	615	W	270	230 (33)	230 (33)	230 (33)	230 (33)	
	225/40R18	7.5Jx18	91	615	W	270	240 (35)	240 (35)	240 (35)	240 (35)	
	225/40ZR18	7.5Jx18	92	630	Y	300	240 (35)	240 (35)	240 (35)	240 (35)	
Compact spare tire	T125/80D15	4.0T×15	95	690	M	130	420 (60)				
	T125/80D16	4.0Tx16	97	730	M	130	420 (60)				

*1: Load Index *2: Speed Symbol *3: Normal load : Up to 3 persons

⚠ CAUTION

When replacing tires, use the same size originally supplied with the vehicle.
Using tires of a different size can damage the related parts or make them work irregularly.

✻ NOTICE

- **It is permissible to add 21 kPa (3 psi) to the standard tire pressure specification if colder temperatures are expected soon.**
  Tires typically loose 7 kPa (1 psi) for every -11°C (12°F) temperature drop. If extreme temperature variations are expected, re-check your tire pressure as necessary to keep them properly inflated.
- **We recommend that when replacing tires, use the same originally supplied with the vehicles. If not, that affects driving performance.**
- **When driving in high altitude grades, it is natural for the atmospheric pressure to decrease. Therefore, please check the tire pressure and add more air when necessary.**
  Additionally required tire air pressure per km above sea level: 10.5 kPa (1.5 psi) km

GROSS VEHICLE WEIGHT

Item	Nu 2.0L MPI		Gamma 1.6L T-GDI
	6MT	IVT	7 DCT
Gross vehicle weight kg (lbs.)	1,650 (3,638)	1,720 (3,792)	1,800 (3,968)

LUGGAGE VOLUME

Item	Volume
SAE	15.3 cu ft (434 *l*)

AIR CONDITIONING SYSTEM

Items	Weight of Volume	Classification
Refrigerant g (oz.)	500 ± 25 (17.6 ± 0.88)	R-134a
		R-1234yf
Compressor lubricant cc (oz.)	110 ± 10 (3.87 ± 0.35)	PAG 30

We recommend that you contact an authorized Kia dealer for more details.

RECOMMENDED LUBRICANTS AND CAPACITIES

To help achieve proper engine and powertrain performance and durability, use only lubricants of the proper quality. The correct lubricants also help promote engine efficiency that results in improved fuel economy.

These lubricants and fluids are recommended for use in your vehicle.

Lubricant		Volume	Classification
Engine oil *1 *2 (drain and refill) Recommends TOTAL QUARTZ	Nu 2.0L MPI	4.0 *l* (4.2 US qt.)	SAE 5W20 / API Latest (ILSAC Latest) *4 ACEA A5 (or ABOVE) / 5W 20 *4
	Gamma 1.6L T-GDI	4.5 *l* (4.75 US qt.)	API Latest (ILSAC Latest) or ACEA A5/B5
Manual transmission fluid		1.7 ~ 1.8 *l* (1.6 ~ 1.7 US qt.)	API Service GL-4 SAE 70W - HK SYN MTF 70W - SPIRAX S6 GHME 70W MTF - GS MTF HD 70W
Intelligent Variable Transmission (IVT)		6.7 *l* (7.1 US qt.)	IVTF SP-CVT1

*1 Refer to the recommended SAE viscosity numbers on the next page.

*2 Engine oils labeled Energy Conserving Oil are now available. Along with other additional benefits, they contribute to fuel economy by reducing the amount of fuel necessary to overcome engine friction. Often, these improvements are difficult to measure in everyday driving, but in a year's time, they can offer significant cost and energy savings.

*3 If the API SM engine oil is not available, you can use API SN or above.

*4 If the ILSAC GF-4 engine oil is not available, you can use ILSAC GF-5 or above.

Lubricant			Volume	Classification
Dual clutch Transmission fluid		1.6L T-GDI	1.9~2.0 *l* (1.8~1.9 US qt.)	HK DCTF 70W (SK) SPIRAX S6 GHME 70W DCTF (H.K.SHELL) GS DCTF HD 70W (GS CALTEX) (API GL-4, SAE 70W)
Coolant	Nu 2.0L MPI	MT	5.6 *l* (5.9 US qt.)	Mixture of antifreeze and water (Ethylene-glycol with phosphate based coolant for cooling device)
		IVT	6.6 *l* (7.0 US qt.)	
	Gamma 1.6L T-GDI	DCT	6.9 *l* (7.3 US qt.)	
Brake fluid			0.7 ~ 0.8 *l* (0.7 ~ 0.8 US qt.)	FMVSS116 DOT-3 or DOT-4
Fuel			53 *l* (14 US gal.)	Unleaded gasoline

Recommended SAE viscosity number

Engine oil viscosity (thickness) has an effect on fuel economy and cold weather operating (engine start and engine oil flowability). Lower viscosity engine oils can provide better fuel economy and cold weather performance; however, higher viscosity engine oils are required for satisfactory lubrication in hot weather. Using oils of any viscosity other than those recommended could result in engine damage. When choosing an oil, consider the range of temperature your vehicle will be operated in before the next oil change. Proceed to select the recommended oil viscosity from the chart.

Temperature Range for SAE Viscosity Numbers										
Temperature	°C	-30	-20	-10	0	10	20	30	40	50
	(°F)	-10	0	20	40	60	80	100	120	
Gamma 1.6L T-GDI								20W-50		
							15W-40			
						10W-30				
		5W-30, 5W-40								

For Fuel economy, it is recommended to use the engine oil of a viscosity grade SAE 5W-30 (API Latest (ILSAC Latest) or ACEA A5/B5). However, if the engine oil is not available in your country, select the proper engine oil using the engine oil viscosity chart.

Temperature Range for SAE Viscosity Numbers										
Temperature	°C	-30	-20	-10	0	10	20	30	40	50
	(°F)	-10	0	20	40	60	80	100	120	
Nu 2.0L MPI							10W-30			
		5W-20, 5W-30								

An engine oil displaying this API Certification Mark conforms to the international Lubricant Specification Advisory Commmittee (ILSAC). It is recommended to only use engine oils that uphold this API Certification Mark

VEHICLE IDENTIFICATION NUMBER (VIN)

■ VIN label

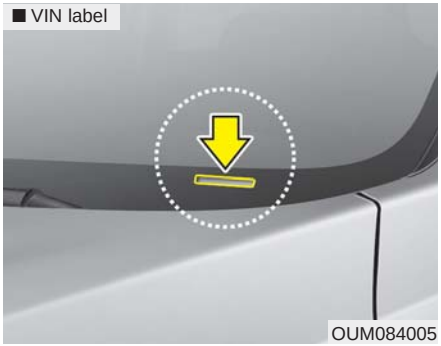

OUM084005

The VIN is also on a plate attached to the top of the dashboard. The number on the plate can easily be seen through the windshield from outside.

VEHICLE CERTIFICATION LABEL

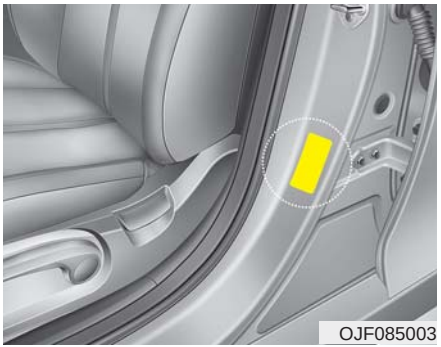

OJF085003

The vehicle certification label attached on the driver's side center pillar gives the vehicle identification number (VIN).

TIRE SPECIFICATION AND PRESSURE LABEL

OJF085012

The tires supplied on your new vehicle are chosen to provide the best performance for normal driving.

The tire label located on the driver's side center pillar gives the tire pressures recommended for your vehicle.

ENGINE NUMBER

■ Gasoline engine (2.0 MPI)

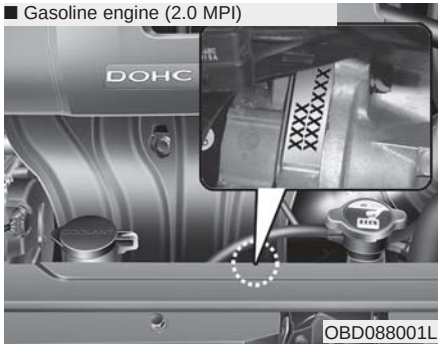

The engine number is stamped on the engine block as shown in the drawing.

Index

A

Air bag - advanced supplemental restraint system.....3-43
Adding equipment to or modifying your air bag-equipped vehicle 3-69
Air bag warning label 3-69
Air bag warning light.....3-46
Curtain air bag 3-62
Driver's and passenger's front air bag 3-58
How does the air bag system operate? 3-44
Occupant Detection System (ODS).....3-50
Side air bag 3-60
SRS Care 3-68
SRS components and functions 3-47
Air cleaner 7-35
Filter replacement 7-35
Air conditioning system 8-7
Appearance care 7-97
Exterior care.....7-97
Interior care 7-102
Audio system 4-155
Antenna 4-155
AUX, USB port 4-156
How vehicle audio works 4-156
Automatic climate control system 4-125
Automatic heating and air conditioning 4-126
Checking the amount of air conditioner refrigerant and compressor lubricant 4-135
Climate control air filter 4-135
Manual heating and air conditioning.....4-127
System operation 4-133

B

Battery.....7-43
For best battery service 7-43
Recharging the battery.....7-44
Reset items.....7-45
Before driving.....5-5
Before entering vehicle 5-5
Before starting 5-5
Necessary inspections 5-5
Blind-spot Collision Warning (BCW) 5-115
BCW (Blind-Spot Collision Warning)/ LCA (Lane Change Assist) 5-116
Driver's Attention.....5-123
RCCW (Rear Cross-Traffic Collision Warning) 5-119
Brake system.....5-44
Anti-lock Brake System (ABS) 5-49
Electronic Stability Control (ESC) 5-50
Good braking practices 5-57
Hill-start Assist Control (HAC).....5-57
Parking brake 5-46
Power brakes 5-44
Vehicle Stability Management (VSM).....5-55

Brake/clutch fluid 7-32
Checking the brake/clutch fluid level 7-32
Bulb wattage 8-4

C

Checking fluid levels 7-25
Child Restraint System (CRS) 3-32
Children Always in the Rear 3-32
Installing a Child Restraint System (CRS) 3-36
Selecting a Child Restraint System (CRS) 3-33
Climate control air filter 7-37
Filter inspection 7-37
Cruise Control System 5-86
To cancel cruise control, do one of the following 5-88
To decrease the cruising speed 5-88
To increase cruise control set speed 5-87
To resume cruising speed at more than approximately 30 km/h (20 mph) 5-89
To set cruise control speed.....5-87
To temporarily accelerate with the cruise control on ..5-88
To turn cruise control off, do one of the following 5-89

D

Declaration of Conformity 4-161
IC 4-161
Defroster 4-114
Rear window defroster.....4-114
Dimensions 8-2
Door locks.....4-19
Child-protector rear door lock 4-22
Engine off door unlock system 4-22
Impact sensing door unlock system.....4-22
Operating door locks from inside the vehicle 4-20
Operating door locks from outside the vehicle 4-19
Drive mode integrated control system 5-111
Driver Attention Warning (DAW).....5-134
Resetting the system 5-136
System disabled 5-136
System malfunction 5-137
System setting and activation 5-134
Dual Clutch Transmission (DCT).....5-22
Dual clutch transmission operation 5-22
Good driving practices.....5-34
LCD display for transmission temperature and warning message 5-24

E

Economical operation 5-139
Emergency starting 6-5
Jump starting 6-5
Push-starting 6-6

Emission control system 7-105
Crankcase emission control system 7-105
Evaporative emission control (including ORVR: Onboard Refueling Vapor Recovery) system 7-105
Exhaust emission control system 7-106
Engine 8-3
Engine compartment 2-6, 7-4
Engine coolant 7-28
Changing the coolant 7-31
Checking the coolant level 7-28
Engine number 8-12
Engine oil 7-26
Changing the engine oil and filter 7-27
Checking the engine oil level 7-26
Engine start/stop button 5-11
Engine start/stop button position 5-11
Illuminated engine start/stop button 5-11
Starting the engine 5-14
Stopping the engine (Manual transmission) 5-17
Explanation of scheduled maintenance items 7-21
Exterior overview 2-2

F

Forward Collision-avoidance Assist (FCA) (Camera + Radar type) 5-72
Brake operation 5-75
FCA warning message and system control 5-74
Limitation of the system 5-80
Limitation of the system 5-83
Recognizing pedestrians 5-84
Sensor to detect the distance from the vehicle in front (front radar/camera) 5-76
System malfunction 5-78
System setting and activation 5-72
Forward Collision-avoidance Assist (FCA) (Camera type) 5-59
Brake operation 5-62
FCA front view camera sensor 5-63
FCA warning message and system control 5-61
Limitation of the system 5-67
System malfunction 5-65
System setting and activation 5-59
Fuel filler lid 4-38
Closing the fuel filler lid 4-38
Opening the fuel filler lid 4-38
Fuel requirements 1-3
Do not use methanol 1-4
Fuel Additives 1-5
Gasoline containing alcohol and methanol 1-3
Operation in foreign countries 1-5
Fuses 7-61
Engine compartment fuse replacement 7-64
Fuse/relay panel description 7-67
Inner panel fuse replacement 7-63

G

Gross vehicle weight.....8-7

H

Hood 4-35
Closing the hood 4-36
Hood open warning 4-36
Opening the hood.....4-35
How to use this manual 1-2

I

If the engine overheats 6-7
If the engine will not start 6-4
If engine doesn't turn over or turns over slowly 6-4
If engine turns over normally but does not start 6-4
If you have a flat tire 6-14
Changing tires 6-15
Jack and tools.....6-14
Removing and storing the spare tire 6-15
If you have a flat tire (With Tire Mobility Kit) 6-23
Checking the tire inflation pressure.....6-31
Components of the Tire Mobility Kit (TMK) 6-26
Components of the Tire Mobility Kit (TMK) 6-27
Distributing the sealant 6-31
Introduction 6-24
Notes on the safe use of the Tire Mobility Kit 6-25
Technical data 6-32
Using the Tire Mobility Kit 6-28
Important safety precautions 3-2
Air bag hazards 3-2
Always wear your seat belt 3-2
Control your speed.....3-3
Driver distraction 3-2
Keep your vehicle in safe condition 3-3
Restrain all children.....3-2
In case of an emergency while driving.....6-3
If the engine stalls at a crossroad or crossing 6-3
If the engine stalls while driving 6-3
If you have a flat tire while driving 6-3
Instrument cluster 4-56
Gauges 4-58
Instrument cluster control 4-57
LCD window control 4-57
Transmission shift indicator.....4-61
Instrument panel overview 2-5
Intelligent Variable Transmission (IVT).....5-35
Good driving practices.....5-41
Intelligent Variable Transmission (IVT) operation 5-35
Shift lock system 5-40
Interior features.....4-144
Air ventilation seat.....4-146
Clothes hanger 4-153
Cup holder 4-144

Floor mat anchor (s).....4-154
Power outlet 4-148
Seat warmer 4-144
Sliding armrest.....4-147
Sunvisor 4-146
USB charger.....4-149
Wireless smart phone charging system 4-150
Interior lights 4-110
Glove box lamp 4-112
Map lamp 4-110
Room lamp.....4-110
Trunk room lamp 4-111
Vanity mirror lamp.....4-112
Interior overview.....2-4

K

Key positions 5-7
Ignition switch position 5-7
Illuminated ignition switch 5-7
Starting the engine 5-9
Stopping the gasoline engine (Manual transmission) ..5-10
Keys 4-4
Key operations 4-4
Record your key number 4-4

L

Lane Keeping Assist (LKA) system 5-125
Driver's attention 5-131
LKA function change.....5-133
LKA malfunction.....5-132
LKA operation 5-126
LCD windows.....4-63
Distance to empty 4-63
LCD modes (For type B, C cluster) 4-69
Over view.....4-63
Service mode 4-70
Trip information (Trip computer) 4-63
User settings mode (For type B, C cluster) 4-71
Light bulbs 7-77
Back up lamp bulb replacement 7-90
Bulb replacement precaution 7-77
Day time running lamp (Bulb type) replacement 7-86
Front fog lamp bulb replacement.....7-86
Front turn signal lamp bulb replacement.....7-85
Glove box lamp replacement.....7-95
Headlamp (High beam) bulb replacement
(Headlamp Type A,B) 7-83
Headlamp (LED type) replacement
(Headlamp Type C) 7-85
Headlamp (Low beam) bulb replacement
(Headlamp Type A,B) 7-81

High mounted stop lamp (bulb type) bulb replacement 7-91
High mounted stop lamp (LED type) bulb replacement 7-91
License plate lamp bulb replacement 7-92
Light bulb position (Front) 7-79
Light bulb position (Rear) 7-80
Light bulb position (Side) 7-81
Map lamp (Bulb type) bulb replacement.....7-92
Map lamp (LED type) bulb replacement.....7-93
Position lamp/Day time running lamp (LED type) replacement (Headlamp Type B).....7-85
Rear turn signal lamp bulb replacement 7-90
Room lamp (Bulb type) bulb replacement 7-93
Room lamp (LED type) bulb replacement 7-94
Side marker (LED type) bulb replacement (Rear combination lamp Type B) 7-90
Side marker bulb replacement (Headlamp Type A,B)..7-84
Side repeater lamp (Bulb type) bulb replacement.....7-87
Side repeater lamp (LED type) bulb replacement.....7-86
Stop and tail lamp (LED type) bulb replacement (Rear combination lamp Type B) 7-89
Stop and tail lamp/side marker (Bulb type) bulb replacement (Rear combination lamp Type A) 7-87
Tail lamp (inside) (Bulb type) bulb replacement (Rear combination lamp Type A) 7-88
Trunk room lamp replacement.....7-96
Vanity mirror lamp bulb replacement 7-94
Lighting.....4-100
Battery saver function 4-100
Daytime running light 4-100
Front fog light 4-107
High beam assist 4-103
High beam operation 4-102
Lighting control 4-100
Turn signals and lane change signals.....4-106
Luggage volume 8-7

M

Maintenance services 7-5
Owner maintenance precautions 7-6
Owner’s responsibility 7-5
Manual climate control system.....4-115
Checking the amount of air conditioner refrigerant and compressor lubricant 4-124
Climate control air filter 4-123
Heating and air conditioning 4-116
System operation 4-121
Manual transmission.....5-18
Good driving practices.....5-21
Manual transmission operation 5-18
Mirrors 4-51
Inside rearview mirror 4-51
Outside rearview mirror.....4-52

O

Owner maintenance 7-8
Owner maintenance schedule 7-8

P

Parking brake 7-34
Checking the parking brake 7-34

R

Rear view monitor 4-99
Recommended lubricants and capacities 8-8
Recommended SAE viscosity number 8-10
Remote keyless entry 4-10
Battery replacement 4-12
Immobilizer system 4-13
Remote keyless entry system operations 4-10
Transmitter precautions 4-11
Reverse Parking Distance Warning 4-96
Non-operational conditions of reverse parking distance warning 4-97
Operation of the reverse parking distance warning 4-96
Reverse parking distance warning precautions 4-98
Self-diagnosis.....4-98
Road warning 6-2
Hazard warning flasher 6-2

S

Scheduled maintenance service 7-10
Seat 3-4
Driver’s seat 3-4
Front passenger’s seat 3-4
Front seat adjustment - power 3-8
Front seat adjustment -manual.....3-7
Headrest (For front seat) 3-10
Rear seat.....3-4
Rear seat adjustment 3-13
Seatback pocket 3-13
Seat belts.....3-18
Care of seat belts 3-30
Pre-tensioner seat belt 3-25
Seat belt precautions 3-28
Seat belt restraint system 3-18
Smart Cruise Control 5-90
Limitations of the system.....5-104
Smart Cruise Control speed.....5-92
Smart Cruise Control switch 5-92
To adjust the sensitivity of smart cruise control 5-103
To convert to cruise control mode 5-103
Vehicle to vehicle distance setting.....5-98
When the lane ahead is clear 5-98
When there is a vehicle ahead of you in your lane 5-99

Smart key 4-6
Smart key functions 4-6
Smart key precautions 4-8
Smart trunk 4-26
Special driving conditions 5-141
Driving at night 5-142
Driving in flooded areas 5-144
Driving in the rain 5-143
Driving off-road 5-144
Hazardous driving conditions 5-141
Highway driving 5-144
Rocking the vehicle 5-141
Smooth cornering.....5-142
Steering wheel 4-47
Electric Power Steering (EPS).....4-47
Heated steering wheel 4-49
Horn 4-49
Tilt and telescopic steering 4-48
Storage compartments 4-142
Center console storage.....4-142
Glove box.....4-142
Sunglass holder 4-143
Sunroof 4-41
Resetting the sunroof 4-45
Sliding the sunroof.....4-43
Sunroof open warning 4-42
Sunshade 4-45
Tilting the sunroof 4-44

T

Theft-alarm system 4-16
Armed stage 4-16
Disarmed stage.....4-18
Theft-alarm stage 4-17
Tire Pressure Monitoring System (TPMS).....6-8
Changing a tire with TPMS 6-12
Check tire pressure.....6-8
Low tire pressure position telltale 6-10
Low tire pressure telltale 6-10
Tire specification and pressure label 8-11
Tires and wheels 7-46, 8-5
All season tires.....7-58
Checking tire inflation pressure.....7-47
Low aspect ratio tire 7-60
Radial-ply tires.....7-59
Recommended cold tire inflation pressures.....7-46
Snow tires.....7-58
Summer tires 7-58
Tire care 7-46
Tire maintenance 7-51
Tire pressure.....7-47
Tire replacement 7-50
Tire rotation 7-48
Tire sidewall labeling.....7-51
Tire traction 7-51

Wheel alignment and tire balance 7-49
Wheel replacement 7-51
Towing 6-33
Emergency towing 6-35
Removable towing hook 6-35
Towing service 6-33
Trailer towing 5-147
Trunk.....4-24
Closing the trunk 4-25
Emergency trunk safety release 4-25
Opening the trunk 4-24

V

Vehicle break-in process.....1-6
Vehicle certification label 8-11
Vehicle data collection and event data recorders 1-7
Vehicle identification number (VIN) 8-11
Vehicle load limit 5-148
Certification label.....5-152
Tire and loading information label 5-148
Vehicle modifications 1-6
Vehicle weight 5-153
Base curb weight 5-153
Cargo weight 5-153
GAW (Gross Axle Weight) 5-153
GAWR (Gross Axle Weight Rating) 5-153
GVW (Gross Vehicle Weight) 5-153
GVWR (Gross Vehicle Weight Rating) 5-153
Vehicle curb weight 5-153

W

Warning and indicator lights.....4-80
Indicator lights 4-90
Warning lights 4-80
Washer fluid 7-33
Checking the washer fluid level.....7-33
Welcome system 4-113
Headlight (Headlamp) escort function.....4-113
Interior light 4-113
Pocket light 4-113
Windows 4-30
Power windows 4-31
Windshield defrosting and defogging.....4-137
Automatic climate control system 4-138
Defogging logic 4-139
Manual climate control system 4-137
Winter driving.....5-145
Carry emergency equipment 5-147
Change to "winter weight" oil if necessary 5-146
Check battery and cables 5-146
Check spark plugs and ignition system 5-146
Don’t let your parking brake freeze.....5-147
Don't let ice and snow accumulate underneath 5-147
Snowy or icy conditions 5-145

To keep locks from freezing 5-146
Use approved window washer anti-freeze in system5-146
Use high quality ethylene glycol coolant 5-146
Wiper blades 7-39
Blade inspection.....7-39
Blade replacement 7-39
Wipers and washers 4-108
Front windshield washers 4-109
Windshield wipers 4-108