表１：北米U

TOYOTA

2002 Owner's Manual

For your safety and comfort,

read carefully and keep in the vehicle.

SEQUOIA

Foreword

Welcome to the growing group of value−conscious people who drive Toyotas. We are proud of the advanced engineering and quality construction of each vehicle we build.

This Owner's Manual explains the operation of your new Toyota. Please read it thoroughly and have all the occupants follow the instructions carefully. Doing so will help you enjoy many years of safe and trouble−free motoring. For important information about this manual and your Toyota, read the following pages carefully.

When it comes to service, remember that your Toyota dealer knows your vehicle best and is interested in your complete satisfaction. He will provide quality maintenance and any other assistance you may require.

If there is not a Toyota dealer near you, or you need emergency assistance for any reason, please call the following number:

à **U.S. OWNERS:**	Toyota Customer Assistance Center	**Toll−free:1−800−331−4331**
à **CANADIAN OWNERS:**	Toyota Canada Customer Interaction Centre	**Toll−free:1−888−TOYOTA−8 (1−888−869−6828)**

Please leave this Owner's Manual in this vehicle at the time of resale. The next owner will need this information also.

All information and specifications in this manual are current at the time of printing. However, because of Toyota's policy of continual product improvement, we reserve the right to make changes at any time without notice.

Please note that this manual applies to all models and explains all equipment, including options. Therefore, you may find some explanations for equipment not installed on your vehicle.

TOYOTA MOTOR CORPORATION

© 2001 TOYOTA MOTOR CORPORATION

All rights reserved. This material may not be reproduced or copied, in whole or in part, without the written permission of Toyota Motor Corporation.

Important information about this manual

Safety and vehicle damage warnings

Throughout this manual, you will see safety and vehicle damage warnings. You must follow these warnings carefully to avoid possible injury or damage.

The types of warnings, what they look like, and how they are used in this manual are explained as follows:

⚠ CAUTION

This is a warning against something which may cause injury to people if the warning is ignored. You are informed about what you must or must not do in order to avoid or reduce the risk to yourself and other people.

NOTICE

This is a warning against something which may cause damage to the vehicle or its equipment if the warning is ignored. You are informed about what you must or must not do in order to avoid or reduce the risk of damage to your vehicle and its equipment.

Safety symbol

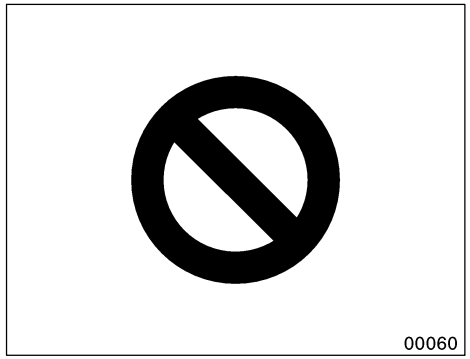

When you see the safety symbol shown above, it means: “Do not...”; “Do not do this”; or “Do not let this happen”.

Important information about your Toyota

New vehicle warranty

Your new vehicle is covered by the following Toyota limited warranties:

- New vehicle warranty
- Emission control systems warranty
- Others

For further information, please refer to the “Owner’s Warranty Information Booklet” or “Owner’s Manual Supplement”.

Your responsibility for maintenance

It is the owner’s responsibility to make sure that the specified maintenance is performed. Section 6 gives details of these maintenance requirements. Also included in Section 6 is general maintenance. For scheduled maintenance information, please refer to the “Scheduled Maintenance Guide” or “Owner’s Manual Supplement”.

Accessories, spare parts and modification of your Toyota

A wide variety of non−genuine spare parts and accessories for Toyota vehicles are currently available in the market. You should know that Toyota does not warrant these products and is not responsible for their performance, repair, or replacement, or for any damage they may cause to, or adverse effect they may have on, your Toyota vehicle.

This vehicle should not be modified with non−genuine Toyota products. Modification with non−genuine Toyota products could affect its performance, safety or durability, and may even violate governmental regulations. In addition, damage or performance problems resulting from the modification may not be covered under warranty.

Spark ignition system of your Toyota

The spark ignition system in your Toyota meets all requirements of the Canadian Interference−Causing Equipment Standard.

Installation of a mobile two−way radio system

As the installation of a mobile two−way radio system in your vehicle could affect electronic systems such as multiport fuel injection system/sequential multiport fuel injection system, electronic throttle control system, cruise control system, anti−lock brake system, traction control system (four−wheel drive models)/active traction control system (two−wheel drive models), vehicle skid control system, SRS airbag system and seat belt pretensioner system, be sure to check with your Toyota dealer for precautionary measures or special instructions regarding installation.

Scrapping of your Toyota

The SRS airbag and front seat belt pretensioner devices in your Toyota contain explosive chemicals. If the vehicle is scrapped with the airbags and pretensioners left as they are, this may cause an accident such as fire. Be sure to have the systems of the SRS airbag and seat belt pretensioner removed and disposed of by a qualified service shop or by your Toyota dealer before you dispose of your vehicle.

On−pavement and off−road driving tips

This vehicle belongs to the utility vehicle class. Utility vehicles have a significantly higher rollover rate than other types of vehicles. This vehicle will handle and maneuver differently from an ordinary passenger car because it is designed for off−road use also. In addition, this vehicle has a higher ground clearance and center of gravity than that of an ordinary passenger car. This vehicle design feature causes this type of vehicle to be more likely to rollover. Failure to operate this vehicle correctly may result in loss of control, accidents or vehicle rollover causing death or serious injury. Be sure to read “Off−road vehicle precautions” on page 212 in Section 2 and “Off−road driving precautions” on page 230 in Section 3.

Table of contents

1 OPERATION OF INSTRUMENTS AND CONTROLS Page

1 Overview of instruments and controls **1**
2 Keys and Doors **7**
3 Seats, Seat belts, Steering wheel and Mirrors **35**
4 Lights, Wipers and Defogger **109**
5 Gauges, Meters and Service reminder indicators **121**
6 Ignition switch, Transmission and Parking brake **131**
7 Car audio system **151**
8 Air conditioning system **171**
9 Other equipment **183**

2 INFORMATION BEFORE DRIVING YOUR TOYOTA 211
3 STARTING AND DRIVING 227
4 IN CASE OF AN EMERGENCY 243
5 CORROSION PREVENTION AND APPEARANCE CARE 263
6 VEHICLE MAINTENANCE AND CARE 271
7 DO−IT−YOURSELF MAINTENANCE

1 Introduction **277**
2 Engine and Chassis **283**
3 Electrical components **295**

8 SPECIFICATIONS 307
9 REPORTING SAFETY DEFECTS FOR U.S. OWNERS AND UNIFORM TIRE QUALITY GRADING 317
10 INDEX 321

SECTION 1–1

OPERATION OF INSTRUMENTS AND CONTROLS

Overview of instruments and controls

Instrument panel overview 2
Instrument cluster overview 4
Indicator symbols on the instrument panel 5

Instrument panel overview

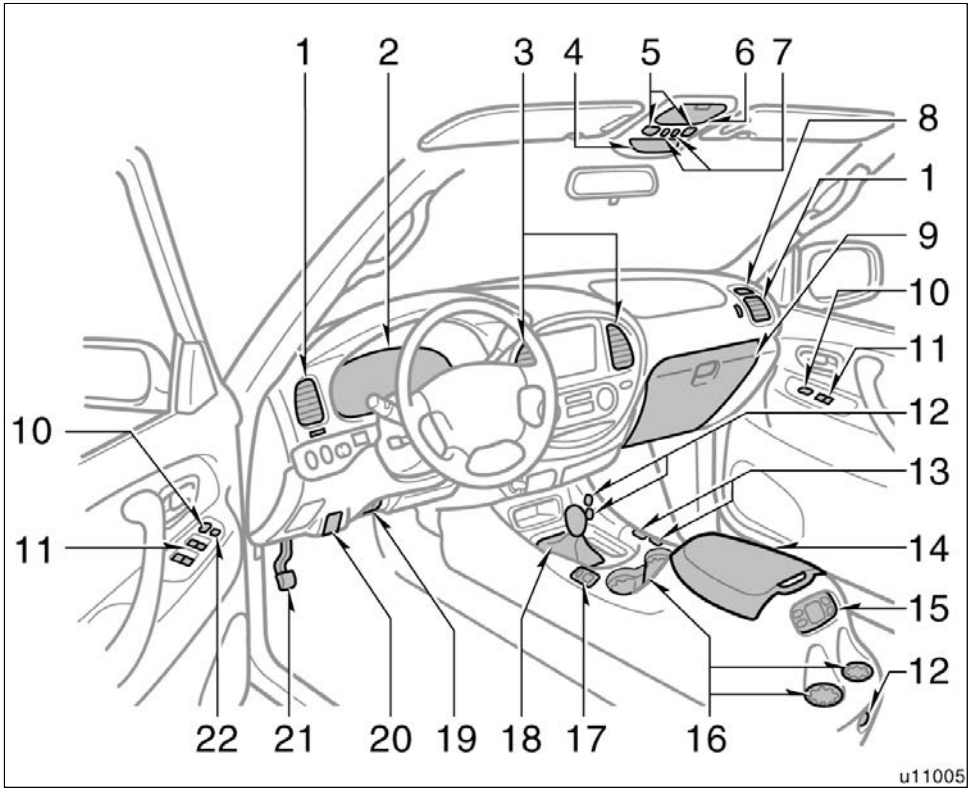

1. Side vents
2. Instrument cluster
3. Center vents
4. Multi−information display
5. Personal lights
6. Garage door opener box or auxiliary box
7. Electric moon roof switches
8. Side defroster outlet
9. Glove box
10. Power door lock switches
11. Power window switches
12. Power outlets
13. Seat heater switches
14. Rear console box
15. Rear air conditioning controls
16. Cup holders
17. Power rear view mirror control switches
18. Front drive control lever
19. Lower vent
20. Hood lock release lever
21. Parking brake pedal
22. Window lock switch

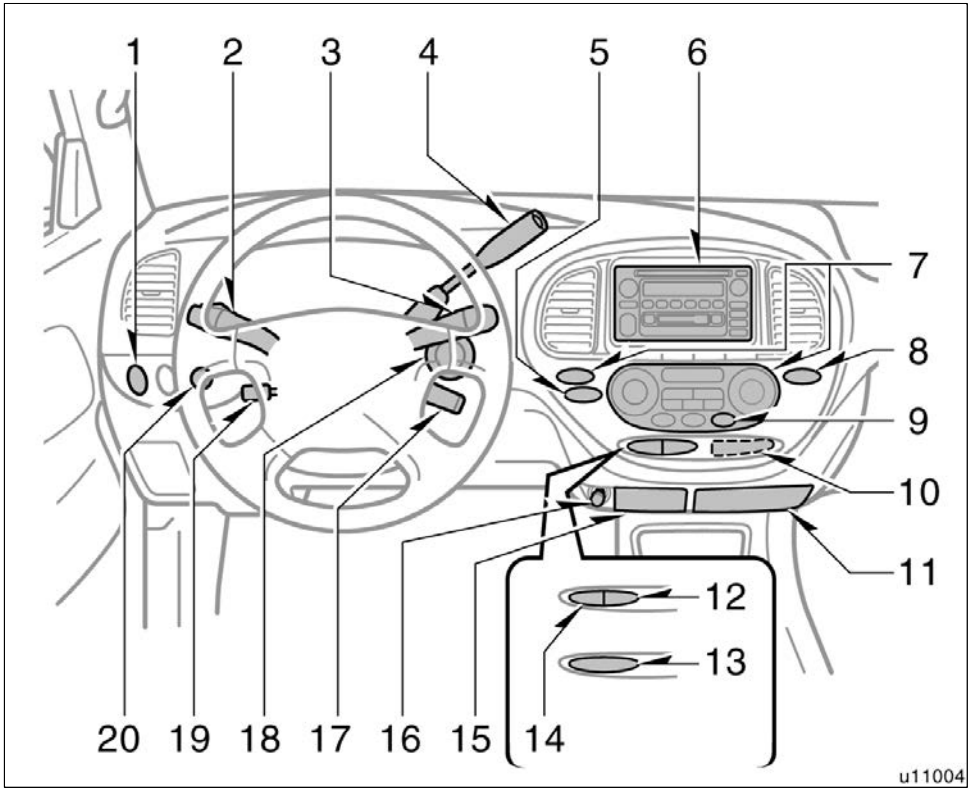

1. Power back window switch
2. Headlight and turn signal switch, and front fog light switch
3. Wiper and washer switches
4. Automatic transmission selector lever
5. Emergency flasher switch
6. Car audio
7. Air conditioning controls
8. Front passenger's seat belt reminder light
9. Back window and rear view mirror defogger switch
10. Clock
11. Cup holder
12. "VSC OFF" switch (four−wheel drive models)
13. "TRAC OFF" switch (two−wheel drive models)
14. "4WD" switch
15. Ashtray
16. Cigarette lighter
17. Cruise control switch
18. Ignition switch
19. Tilt steering lock release lever
20. Instrument panel light control knob

Instrument cluster overview

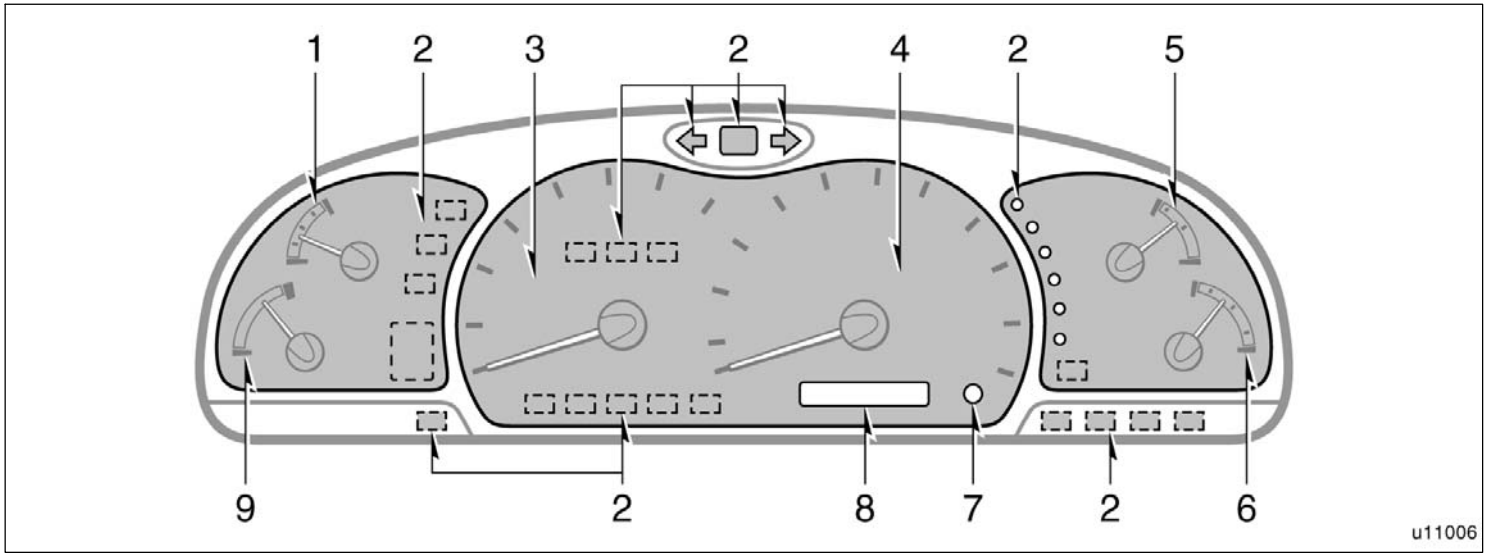

1. Oil pressure gauge
2. Service reminder indicators and indicator lights
3. Tachometer
4. Speedometer
5. Volt meter
6. Fuel gauge
7. Trip meter reset knob
8. Odometer and two trip meters
9. Engine coolant temperature gauge

Indicator symbols on the instrument panel

BRAKE	Brake system warning light*1
	Driver's seat belt reminder light*1
PASSENGER	Front passenger's seat belt reminder light*1
− +	Discharge warning light*1
CHECK	Malfunction indicator lamp*1
	Low fuel level warning light*1
ABS or ABS	Anti−lock brake system warning light*1

VSC TRAC	Vehicle skid control system/traction control system (two−wheel drive models) or active traction control system (four−wheel drive models) warning light*1
	Open door warning light*1
	SRS warning light*1
A/T P	Unengaged "Park" warning light*1
A/T OIL TEMP	Automatic transmission fluid temperature warning light*1
	Low windshield washer fluid level warning light*1
	Engine immobiliser/theft deterrent system indicator light

	Turn signal indicator lights
	Headlight high beam indicator light
O/D OFF	Overdrive−off indicator light
P R N D 2 L	Automatic transmission indicator lights
	Four−wheel drive and center differential lock indicator lights
	Slip indicator light
TRAC OFF	Traction control system off indicator light*1 (two−wheel drive models)
VSC OFF	Vehicle skid control system off indicator light*1 (four−wheel drive models)
CRUISE	Cruise control indicator light*2

*1: For details, see “Service reminder indicators and warning buzzers” on page 125 in Section 1−5.

*2: If this light flashes, see “Cruise control” on page 148 in Section 1−6.

SECTION 1–2

OPERATION OF INSTRUMENTS AND CONTROLS

Keys and Doors

Keys 8
Engine immobiliser system 10
Side doors 12
Power windows 22
Power back window 25
Back door 27
Hood 29
Theft deterrent system 29
Fuel tank cap 31
Electric moon roof 32

Keys

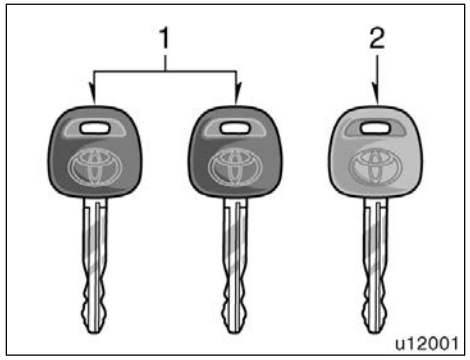

Your vehicle is supplied with the two kinds of keys.

1. Master key (black)—This key works in every lock. Your Toyota dealer will need it to make you a new key with built−in transponder chip.
2. Sub key (gray)—This key also works in every lock.

A transponder chip for engine immobiliser system has been filled in the head of the master and sub keys. These chips are needed to enable the system to function correctly, so be careful not to lose these keys. If you make your own duplicate key, you will not be able to cancel the system or start the engine.

Since the side doors can be locked without a key, you should always carry a spare master key in case you accidentally lock your keys inside the vehicle.

For information on use of the wireless remote control key, see “Side doors” on page 12 in this section.

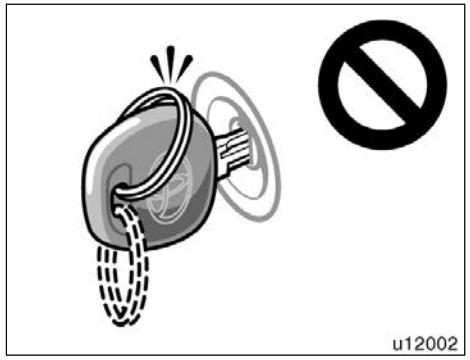

NOTICE

When using a key containing a transponder chip, observe the following precautions:

- ***When starting the engine, do not use the key with a key ring resting on the key grip and do not press the key ring against the key grip. Otherwise the engine may not start, or may stop soon after it starts.***

◡ ***When starting the engine, do not use the key with other transponder keys around (including keys of other vehicles) and do not press other key plates against the key grip. Otherwise the engine may not start, or may stop soon after it starts. If this happens, remove the key once and then insert it again after taking off other transponder keys (including keys of other vehicles) from the ring or while gripping or covering them with your hand to start the engine.***

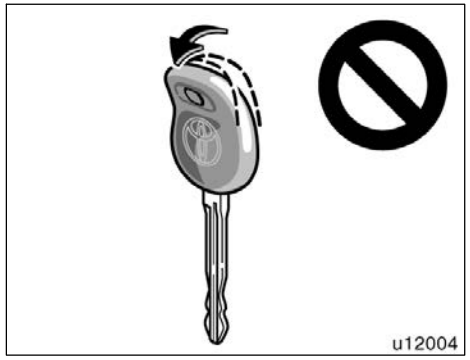

◡ ***Do not bend the key grip.***

◡ ***Do not cover the key grip with any material that cuts off electromagnetic waves.***

◡ ***Do not knock the key hard against other objects.***

◡ ***Do not leave the key exposed to high temperatures for a long period, such as on the dashboard and hood under the direct sunlight.***

◡ ***Do not put the key in water or wash it in an ultrasonic washer.***

◡ ***Do not use the key with electromagnetic materials.***

Engine immobiliser system

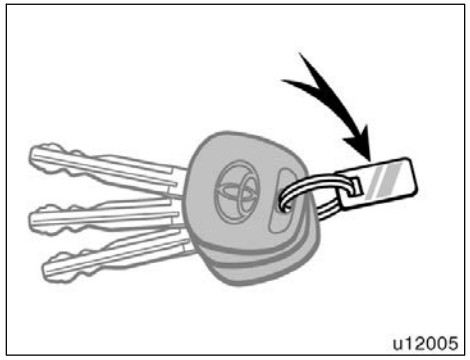

KEY NUMBER PLATE

Your key number is shown on the plate. Keep the plate in a safe place such as your wallet, not in the vehicle.

If you should lose your keys or if you need additional keys, duplicates can be made by a Toyota dealer using the key number.

We recommend you to write down the key number and keep it in safe place.

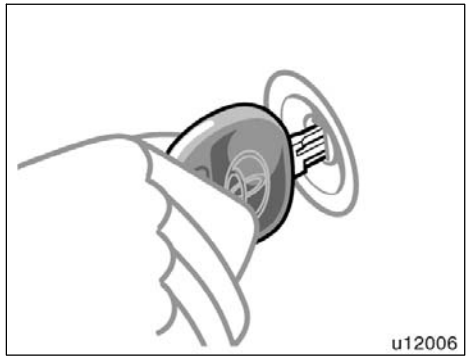

The engine immobiliser system is a theft prevention system. When you insert the key in the ignition switch, the transponder chip in the key's head transmits an electronic code to the vehicle. The engine will start, only when the electronic code in the chip corresponds to the registered ID code for the vehicle.

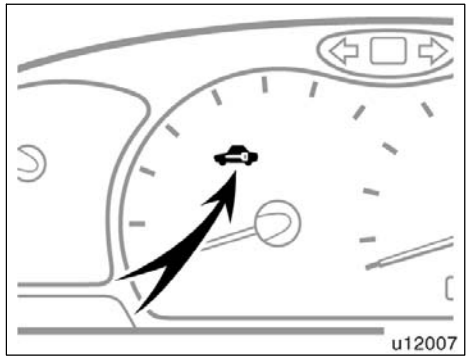

The system is automatically set when the key is removed from the ignition switch. The indicator light will start flashing to show the system is set.

If any of the following indicator conditions occurs, contact your Toyota dealer.

- The indicator light stays on except when the theft deterrent system is setting or activating. (See "Theft deterrent system" on page 29 in this section.)
- The indicator light does not start flashing when the key is removed from the ignition switch.
- The indicator light flashes unsteady.

Inserting the registered key in the ignition switch automatically cancels the system, which enables the engine to start. The indicator light will go off.

For your Toyota dealer to make you a new key with built−in transponder chip, your dealer will need your key number and master key. However, there is a limit to the number of additional keys your Toyota dealer can make for you.

If you make your own duplicate key, you will not be able to cancel the system or start the engine.

NOTICE

Do not modify, remove or disassemble the engine immobiliser system. If any unauthorized changes or modifications are made, the proper operation of the system cannot be guaranteed.

For vehicles sold in U.S.A.

FCC ID: MOZ RI−4ETY
MADE IN JAPAN

This device complies with Part 15 of the FCC Rules. Operation is subject to the following two conditions:

(1) This device may not cause harmful interference, and (2) this device must accept any interference received, including interference that may cause undesired operation.

CAUTION

Changes or modifications not expressly approved by the party responsible for compliance could void the user's authority to operate the equipment.

For vehicles sold in Canada

This device complies with RSS−210 of Industry Canada. Operation is subject to the following two conditions:

(1) This device may not cause interference, and (2) this device must accept any interference, including interference that may cause undesired operation of the device.

Side doors

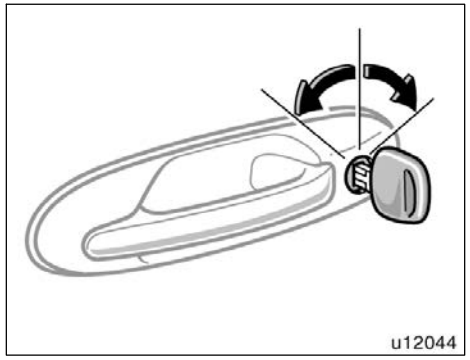

LOCKING AND UNLOCKING WITH KEY

Insert the key into the keyhole and turn it.

To lock: Turn the key forward.
To unlock: Turn the key backward.

All the side doors and back door lock and unlock simultaneously with either front side door. In the driver's door lock, turning the key once will unlock the driver's door and twice in succession will unlock all the side doors and back door simultaneously.

This double key turning operation to unlock all the side doors and back door can be changed to a single key turning operation. For details, contact your Toyota dealer.

When all the side doors and back door are unlocked simultaneously with a key, the interior light, luggage compartment light, ignition switch light and foot light come on for about 15 seconds and then fade out, even if the door is not opened. (For details, see "Center interior and personal lights" on page 115, "Luggage compartment light" on page 116 and "Ignition switch light" on page 117 in Section 1−4.)

The windows and electric moon roof can be opened or closed with the key operation in the driver's door keyhole. (For details, see "Power windows" on page 22 and "Electric moon roof" on page 32 in this section.)

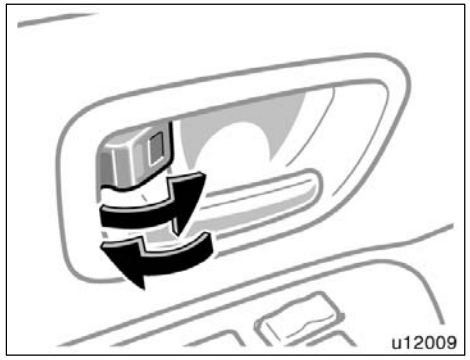

LOCKING AND UNLOCKING WITH INSIDE LOCK KNOB

Move the lock knob.

To lock: Push the knob forward.
To unlock: Pull the knob backward.

The both front doors can be opened from the inside even with the lock knob in the locked position.

Closing the door with the lock knob in the lock position will also lock the door. Be careful not to lock your keys in the vehicle.

The front side doors cannot be locked if you leave the key in the ignition switch.

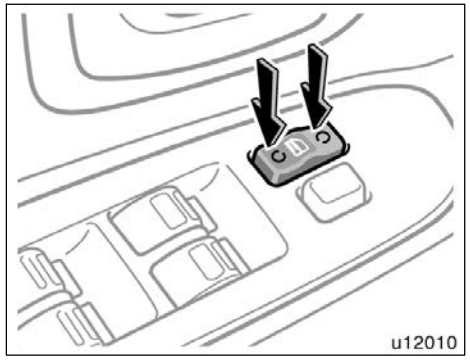

Driver's side

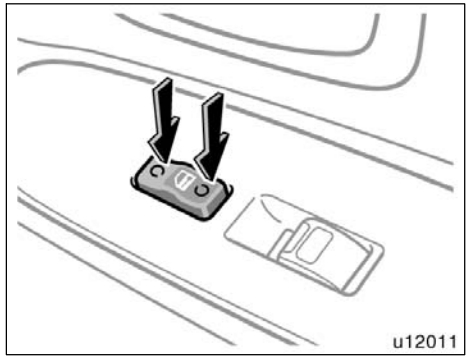

Passenger's side

LOCKING AND UNLOCKING WITH POWER DOOR LOCK SWITCH

Push the switch.

To lock: Push the switch on the front side. To unlock: Push the switch on the rear side.

All the doors lock or unlock simultaneously.

When the front side doors are locked from the outside or locked with the wireless remote control transmitter, the power door lock switch will not work until either front door is unlocked with the key, lock knob, or wireless remote control transmitter.

If the vehicle is subjected to a severe impact from the front or rear, or from either side with the ignition switch at the "ON" position, all the door locks are automatically cancelled.

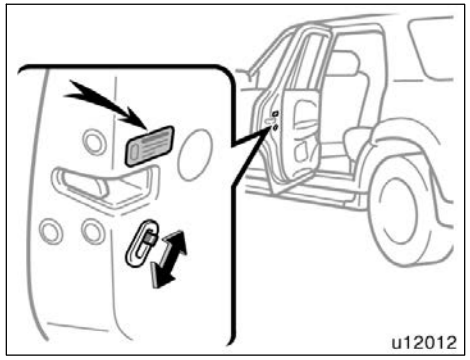

REAR DOOR CHILD–PROTECTORS

Move the lock lever to the "LOCK" position as shown on the label.

This feature allows you to lock a rear door so it can be opened from the outside only, not from inside. We recommend using this feature whenever small children are in the vehicle.

CAUTION

Before driving, be sure that the doors are closed and locked, especially when small children are in the vehicle. Along with the proper use of seat belts, locking the doors helps prevent the driver and passengers from being thrown out from the vehicle during an accident. It also helps prevent the doors from being opened unintentionally.

—Automatic door locking and unlocking functions

You can select the following modes of the automatic locking and unlocking functions. The initial mode is mode 1.

- **Mode 1—Automatic locking operation linked to shift lever position**

  All doors are automatically locked when the shift lever is moved out of "P" position after the ignition switch is turned to the "ON" position and all the doors are closed.

- **Mode 2—Automatic locking operation linked to vehicle speed**

  All doors are automatically locked when the vehicle speed goes above about 20 km/h (12 mph).

- **Mode 3—Automatic unlocking operation linked to the ignition switch**

  All doors are automatically unlocked when the driver's door is opened within 10 seconds after the ignition switch is turned to the "ACC" or "LOCK" position, or the key is removed.

- **Mode 4—Automatic unlocking operation linked to shift lever position**

  All doors are automatically unlocked when the selector lever is moved to "P" position after the ignition switch is turned to "ON" position.

SETTING FUNCTIONS

You can set the following functions by yourself.

To set the mode 1 (the automatic locking operation linked to shift lever position):

1. Set the parking brake, close all doors and turn the ignition switch to the “ON” position.
2. Shift the selector lever into the “P” position.
3. Press the driver’s side power door lock switch on the front side for about 5 seconds, within 10 seconds after the ignition switch is turned to the “ON” position.
4. The doors will be locked and unlocked to indicate that the function is set.

To cancel the function, do the above operation again.

To set the mode 2 (the automatic locking operation linked to vehicle speed):

1. Set the parking brake, close all doors and turn the ignition switch to the “ON” position.
2. Shift the selector lever from the “P” into the “N” position.
3. Press the driver’s side power door lock switch on the front side for about 5 seconds, within 10 seconds after the ignition switch is turned to the “ON” position.
4. The doors will be locked and unlocked to indicate that the function is set.

To cancel the function, do the above operation again.

To set the mode 3 (the automatic unlocking operation linked to the ignition switch):

1. Set the parking brake, close all doors and turn the ignition switch to the “ON” position.
2. Shift the selector lever from the “P” into the “N” position.
3. Press the driver’s side power door lock switch on the rear side for about 5 seconds, within 10 seconds after the ignition switch is turned to the “ON” position.
4. The doors will be locked and unlocked to indicate that the function is set.

To cancel the function, do the above operation again.

To set the mode 4 (the automatic unlocking operation linked to shift lever position):

1. Set the parking brake, close all doors and turn the ignition switch to the “ON” position.
2. Shift the selector lever into the “P” position.
3. Press the driver’s side power door lock switch on the rear side for about 5 seconds, within 10 seconds after the ignition switch is turned to the “ON” position.
4. The doors will be locked and unlocked to indicate that the function is set.

To cancel the function, do the above operation again.

⚠ CAUTION

To prevent an accident, set and cancel the function with the parking brake set securely.

—Wireless remote control

Locking operation

Unlocking operation

The wireless remote control system is designed to lock or unlock all the side doors and back door, or activate the "PANIC" mode from a distance within approximately 1 m (3 ft.) of the vehicle.

LOCKING AND UNLOCKING THE SIDE DOORS AND BACK DOOR

To lock and unlock all the side doors and back door, push the switches slowly and securely.

To lock: Push the "LOCK" switch. All the side doors and back door are locked simultaneously. At this time one beep will be heard, and the parking lights and tail lights flash once.

Check to see that all the side doors and back door are securely locked.

If any of the side doors or back door is not securely closed, locking cannot be performed by the "LOCK" switch and a beep will sound continuously for 10 seconds. However, if the key is in the ignition, a beep will not sound.

To stop the buzzer, close all the doors securely or push the "UNLOCK" switch.

The buzzer can be disabled. For details, contact your Toyota dealer.

To unlock: Push the "UNLOCK" switch once to unlock the driver's door alone. Pushing the switch twice within 3 seconds unlocks all the side doors and back door simultaneously. Each time the "UNLOCK" switch is pushed, two beeps will be heard, and the parking lights and tail lights flash twice.

This double switch operation to unlock all the side doors and back door can be changed to a single switch operation. For details, contact your Toyota dealer.

When all the side doors and back door are unlocked simultaneously with a wireless remote control transmitter, the interior light, luggage compartment light, ignition switch light and foot light come on for about 15 seconds and then fade out, even if the door is not opened. (For details, see "Center interior and personal light" on page 115, "Luggage compartment light" on page 116 and "Ignition switch light" on page 117 in Section 1−4.)

You have 30 seconds to open a door after using the wireless remote unlock feature. If a door is not opened by then, all the side doors and back door will be automatically locked again.

The timing for the automatic door lock function can be changed. For details, contact your Toyota dealer.

If the “LOCK” or “UNLOCK” switch is kept pressed in, the locking or unlocking operation is not repeated. Release the button and then push again.

The wireless door locking or unlocking function can be erased. For details, contact your Toyota dealer.

SWITCHING BEEP SOUND ON AND OFF

You can switch the beep on and off. (The beep is on initially and after battery replacement.)

To switch the beep on and off:

With the driver’s door opened—

1. Insert the ignition key and remove it.
2. Within 5 seconds, insert the ignition key again and turn it to the “ON” position.
3. After 10 seconds, push the same “LOCK”, “UNLOCK”, “PANIC” switch or back window open button twice within 10 seconds.
   Two beep sounds inform you that the program has been switched on or off.

If this procedure is not followed exactly, the beep will not operate as expected.

Check the beep ON/OFF operation by pushing the transmitter switch after you finish this procedure. If the beep does not operate as expected, repeat this procedure from step 1.

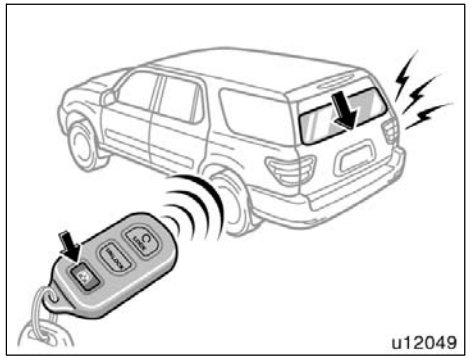

OPENING THE BACK WINDOW

To open the back window, push the back window open switch of the transmitter for about 1 second. The window will fully open.

At this time, you can hear a beep.

If the ignition switch is in the “ON” position, the back window cannot be opened by the back window open switch.

To open the back window with the master key, see “Power back window” on page 25 in this section.

The back window opening program by wireless remote control can be changed or disabled. For details, contact your Toyota dealer.

“PANIC” SWITCH

Pushing the “PANIC” switch blows the horn intermittently and flashes the headlights and tail lights.

The “PANIC” switch is used to deter vehicle theft when you witness anyone attempting to break into or damage your vehicle.

The alarm will last for one minute. To stop alarm midway, push the “PANIC” or “UNLOCK” switch, or unlock any side door or back door with key. You can also stop the alarm by turning the ignition key from “LOCK” to the “ON” position.

The “PANIC” mode does not work when the ignition key is in the “ON” position.

This alarm function can be disabled. For details, contact your Toyota dealer.

WIRELESS REMOTE CONTROL TRANSMITTER

The wireless remote control transmitter is an electronic component. Observe the following instructions in order not to cause damage to the transmitter.

- Do not leave the transmitter on places where the temperature becomes high such as on the dashboard.
- Do not disassemble it.
- Avoid knocking it hard against other objects or dropping it.
- Avoid putting it in water.

You can use up to 4 wireless remote control transmitters for the same vehicle. Contact your Toyota dealer for detailed information.

If the wireless remote control transmitter does not actuate the doors or operate from a normal distance:

- Check for closeness to a radio transmitter such as a radio station or an airport which can interfere with normal operation of the transmitter.
- The battery may have been consumed. Check the battery in the transmitter. To replace the battery, see following “REPLACING THE BATTERY”.

If you lose your transmitter, contact your Toyota dealer as soon as possible to avoid the possibility of theft, or an accident. (See “If you lose your wireless remote control transmitter” on page 261 in Section 4.)

For vehicles sold in U.S.A.

This device complies with Part 15 of the FCC Rules. Operation is subject to the following two conditions:

(1) This device may not cause harmful interference, and (2) this device must accept any interference received, including interference that may cause undesired operation.

NOTICE:
This equipment has been tested and found to comply with the limits for a Class B digital device, pursuant to Part 15 of the FCC Rules. These limits are designed to provide reasonable protection against harmful interference in a residential installation. This equipment generates, uses and can radiate radio frequency energy and, if not installed and used in accordance with the instructions, may cause harmful interference to radio communications. However, there is no guarantee that interference will not occur in a particular installation. If this equipment does cause harmful interference to radio or television reception, which can be determined by turning the equipment off and on, the user is encouraged to try to correct the interference by one or more of the following measures:

- à Reorient or relocate the receiving antenna.
- à Increase the separation between the equipment and receiver.
- à Connect the equipment into an outlet on a circuit different from that to which the receiver is connected.
- à Consult the dealer or an experienced radio / TV technician for help.

FCC WARNING:
Changes or modifications not expressly approved by the party responsible for compliance could void the user's authority to operate the equipment.

For vehicles sold in Canada

Operation is subject to the following two conditions:

(1) this device may not cause interference, and (2) this device must accept any interference, including interference that may cause undesired operation of the device.

REPLACING THE BATTERY

For replacement, use a lithium battery CR2016.

⚠ CAUTION

Special care should be taken that small children do not swallow the removed battery or components.

NOTICE

- ***When replacing the transmitter battery, be careful not to lose the components.***
- ***Replace only with the same or equivalent type recommended by the manufacturer.***
- ***Dispose of used batteries according to the local laws.***

Replace the battery by the following procedures:

1. Using a coin or equivalent, open the transmitter case.

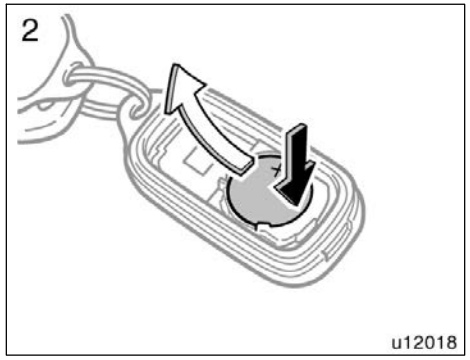

2. Remove the discharged transmitter battery.

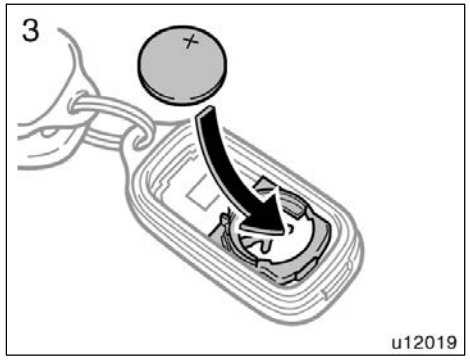

3. Put a new transmitter battery with positive (+) side up.

Close the transmitter case securely.

NOTICE

- ***Make sure the positive and negative side of the transmitter battery should be faced correctly.***
- ***Do not replace the battery with wet hands. Water may cause unexpected rust.***
- ***Do not touch or move any components inside of the transmitter, or it may interfere with proper operation.***
- ***Be careful that dust or oils do not adhere to the transmitter case.***
- ***Close the transmitter case securely.***

After replacing battery, check that the transmitter operates properly. If the transmitter still does not operate properly, contact your Toyota dealer.

Power windows

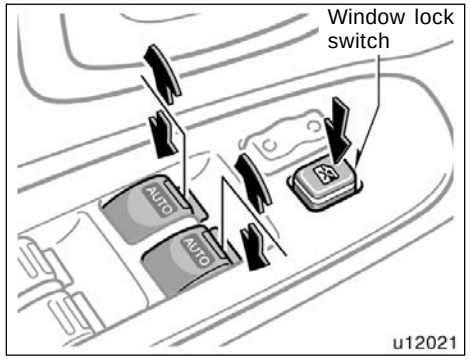

Driver's door switches

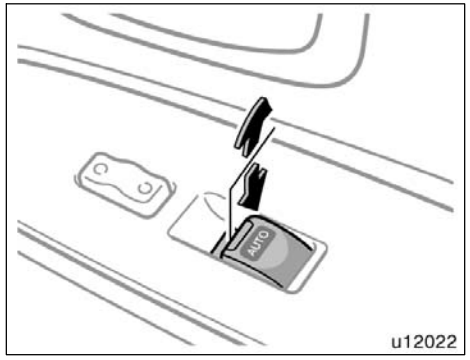

Front passenger's door switch

OPERATING FROM INSIDE

The windows can be operated with the switch on each side door.

The power windows work when the ignition switch is in the "ON" position.

Key off operation: If both front side doors are closed, they work for 43 seconds even after the ignition switch is turned off. They stop working when either front side door is opened.

OPERATING THE DRIVER'S AND FRONT PASSENGER'S WINDOWS

Use the switches on the driver's door and front passenger's door.

Normal operation: The window moves as long as you hold the switch.

To open: Lightly push down the switch.
To close: Lightly pull up the switch.

If you push in the window lock switch on the driver's door, the front passengers' window cannot be operated.

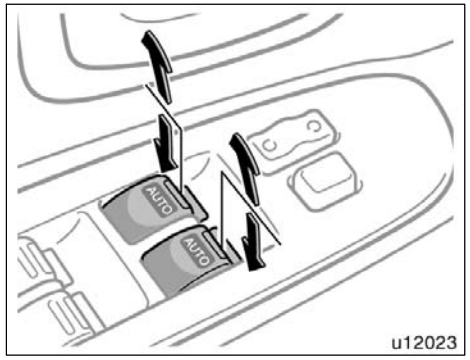

Driver's door switches

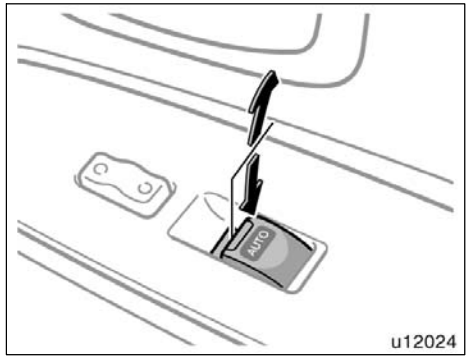

Front passenger's door switch

Automatic operation: Push the switch completely down or pull it completely up, and then release it. The window will fully open or close. To stop the window partway, lightly move the switch in the opposite direction and then release it.

If you push in the window lock switch on the driver's door, the front passengers' window cannot be operated.

Jam protection function: During automatic closing operation, the window stops and opens half way if something gets caught between the window and window frame.

If the window receives a strong impact, this function may work even if nothing is caught.

⚠ CAUTION

- **Never try jamming any part of your body to make the jam protection function work intentionally.**
- **The jam protection function may not work if something gets caught just before the window is fully closed.**

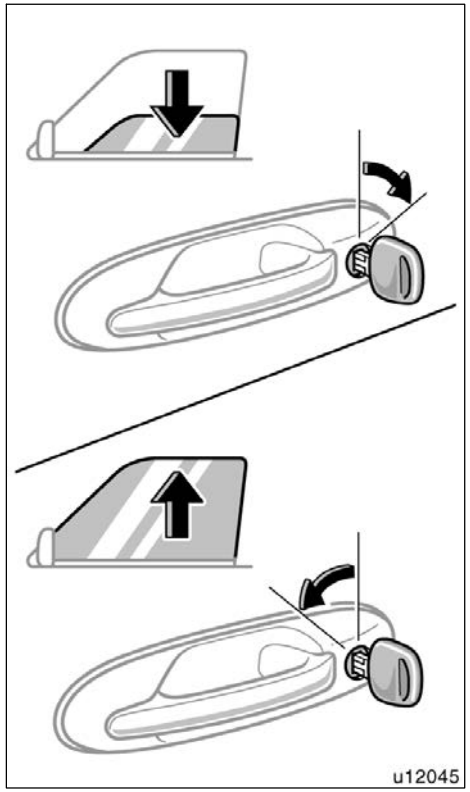

OPERATING FROM OUTSIDE

The front windows can be opened and closed with the key operation in the driver's door keyhole.

To open: Turn the key fully backward and hold it.

After the door is unlocked, the window begins to open. To stop the window partway, release the key.

To close: Turn the key fully forward and hold it.

After the door is locked, the window begins to close. To stop the window partway, release the key.

This feature can be disabled. For details, contact your Toyota dealer.

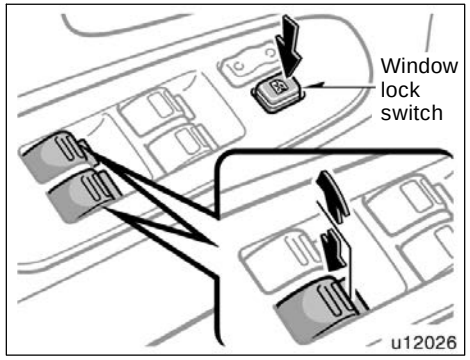

Driver's door switches

OPERATING THE REAR PASSENGERS' WINDOWS

Use the switch on each rear passengers' doors or the switches on the driver's door that control rear passengers' windows.

The window moves as long as you hold the switch.

To open: Push down the switch.
To close: Pull up the switch.

If you push in the window lock switch on the driver's door, the rear passengers' windows cannot be operated.

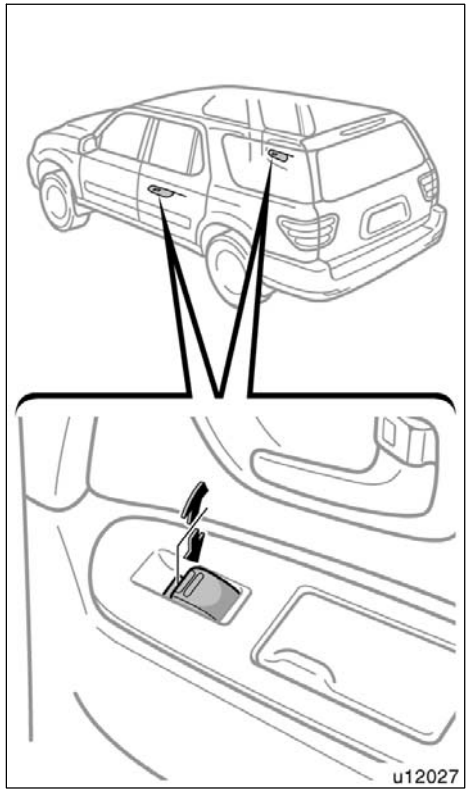

Rear passengers' door switches

⚠ CAUTION

To avoid serious personal injury, you must do the following.

- **Always make sure the heads, hands and other parts of the bodies of all occupants are kept completely inside the vehicle before you close the power windows. If someone's neck, head or hands gets caught in a closing window, it could result in a serious injury. When anyone closes the power windows, make sure that he/she operates the windows safely.**
- **When small children are in the vehicle, never let them use the power window switches without supervision. Use the window lock switch to prevent them from making unexpected use of the switches.**
- **Never leave small children alone in the vehicle, especially with the ignition key still inserted. They could use the power window switches and get trapped in a window. Unattended children can be involved in serious accidents.**

Power back window

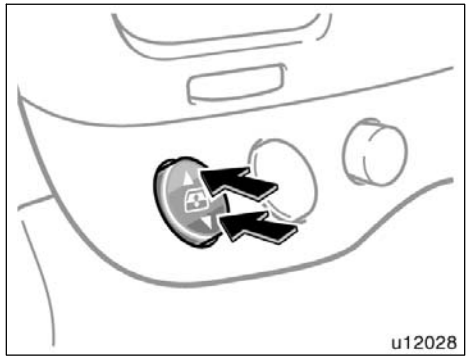

OPERATING FROM INSIDE

The back window can be operated with the switch on the instrument panel.

The ignition key must be in the “ON” position.

The back window moves as long as you hold the inner switch.

To open: Push the switch on the “▼” side.
To close: Push the switch on the “▲” side.

You can also open the back window when the back window wiper is working. At that time, the wiper stops working until the window is closed again.

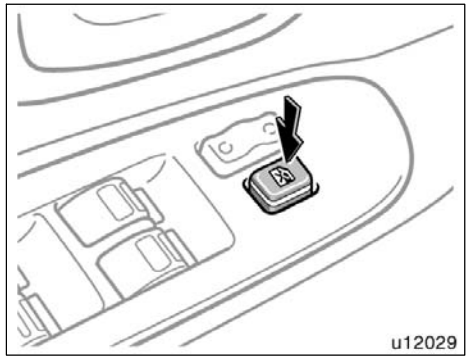

If you push in the window lock switch on the driver’s door, the back window cannot be operated.

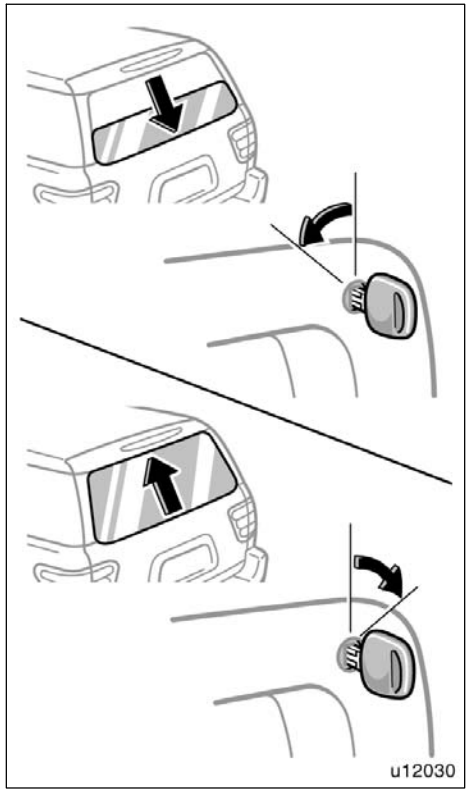

OPERATING FROM OUTSIDE

The back window can be opened and closed with the key operation in the back door keyhole.

To open: Turn the key fully counterclockwise and hold it.

After the door is unlocked, the window begins to open. To stop the window partway, release the key.

To close: Turn the key fully clockwise and hold it.

After the door is locked, the window begins to close. To stop the window partway, release the key.

This door key linked function can be erased. For details, contact your Toyota dealer.

You can also open the back window when the back window wiper is working. At the time, the wiper stops working until the window is closed again.

⚠ CAUTION

To avoid serious personal injury, you must do the following.

- **Always make sure the heads, hands and other parts of the bodies of all occupants are kept completely inside the vehicle before you close the power back window. If someone's neck, head or hands gets caught in a closing window, it could result in a serious injury. When anyone closes the power back window, make sure that he/she operates the window safely.**
- **When small children are in the vehicle, never let them use the power back window switch without supervision. Use the window lock switch to prevent them from making unexpected use of the switch.**
- **Never leave small children alone in the vehicle, especially with the ignition key still inserted. They could use the power back window switch and get trapped in a window. Unattended children can be involved in serious accidents.**

à Keep the back window closed while driving. This not only keeps the luggage from being thrown out but also prevents exhaust gases from entering the vehicle.

Vehicles with wireless remote control system—To open the back window with the wireless remote control transmitter, see "—Wireless remote control" on page 16 in this section.

Back door

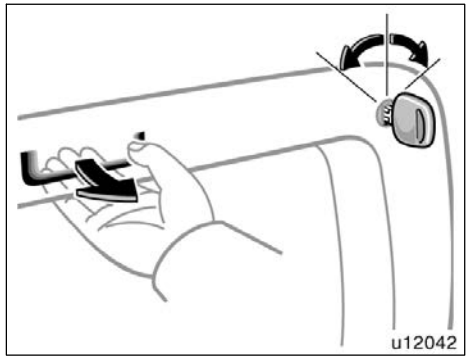

LOCKING AND UNLOCKING WITH KEY

Insert the key into the keyhole and turn it.

To lock: Turn the key clockwise.
To unlock: Turn the key counterclockwise.

All the doors lock and unlock simultaneously with back door.

To open the back door, pull the lever.

The back door will be controlled by operating the power door lock switch.

The back door window can be opened or closed with the key operation in the back door keyhole. (For details, see "Power back window" on page 25 in this section.)

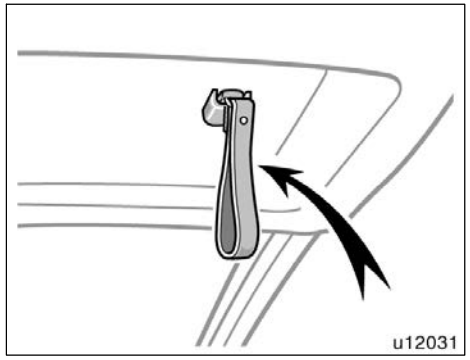

When closing the back door, use the inside strap for easier reach to the back door.

To close the back door, lower it and press down on it. After closing the back door, try pulling it up to make sure it is securely closed.

See "Luggage stowage precautions" on page 222 in Section 2 for precautions in loading luggage.

⚠ CAUTION

Keep the back window and back door closed while driving. This not only keeps the luggage from being thrown out but also prevents exhaust gases from entering the vehicle.

NOTICE

To prevent damage to the back door dampers, do not apply any force, paint or let any other foreign matter on them.

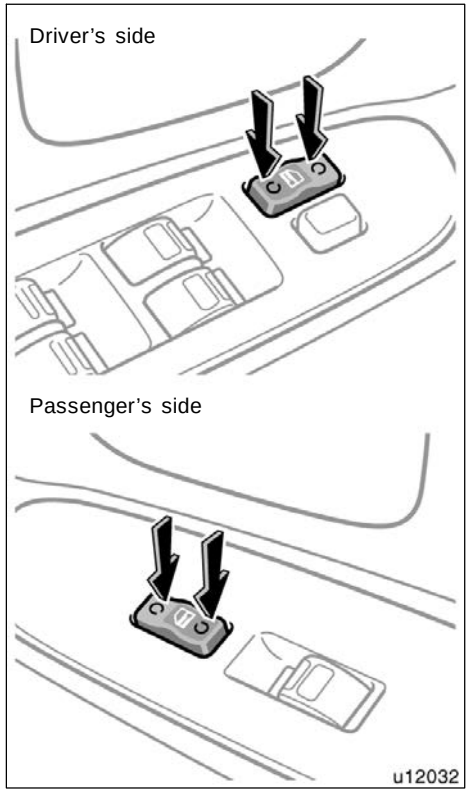

LOCKING AND UNLOCKING WITH POWER BACK DOOR LOCK SWITCH

Push the switch.

To lock: Push the switch on the front side. To unlock: Push the switch on the rear side.

Operating the power door lock switch simultaneously locks or unlocks the back door. (See "Side doors" on page 12 in this section.)

Vehicles with wireless remote control system—To lock or unlock the back door, see "—Wireless remote control" on page 16 in this section.

Hood

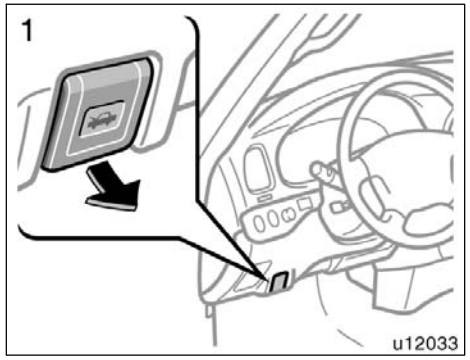

To open the hood:

1. **Pull the hood lock release lever. The hood will spring up slightly.**

⚠ CAUTION

Before driving, be sure that the hood is closed and securely locked. Otherwise, the hood may open unexpectedly while driving and an accident may occur.

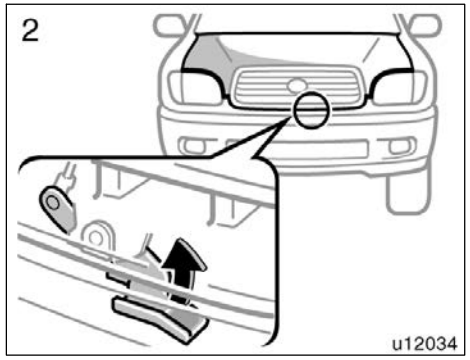

2. **In front of the vehicle, pull up the auxiliary catch lever and lift the hood.**

Before closing the hood, check to see that you have not forgotten any tools, rags, etc. Then lower the hood make sure it locks into place. If necessary, press down gently on the front edge to lock it.

Theft deterrent system

To deter the vehicle theft, the system is designed to give an alarm if any of the side doors, back door or hood is forcibly unlocked or opened or the battery terminal is disconnected and then reconnected when the vehicle is locked.

The alarm blows the horn intermittently and flashes the headlights and tail lights.

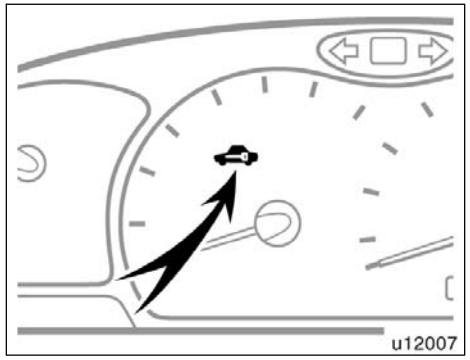

SETTING THE SYSTEM

1. Turn the ignition key to the “LOCK” position and remove it.

The indicator light will start flashing when the key is removed from the ignition switch. (See “Engine immobiliser system” on page 10 for details.)

2. Have all passengers get out of the vehicle.
3. Close and lock all the side doors, back door and hood.

The indicator light will come on when all the side doors, back door and hood are closed and locked.

The system will automatically be set after 30 seconds. When the system is set, the indicator light will start flashing again.

4. After making sure the indicator light starts flashing, you may leave the vehicle.

Never leave anyone in the vehicle when you set the system, because unlocking from the inside will activate the system.

WHEN THE SYSTEM IS SET

Activating the system

The system will give the alarm under the following conditions:

- If any of the side doors is unlocked or opened without the key or wireless remote control transmitter, or if the back door or hood is forcibly opened
- If the battery terminal is disconnected and then reconnected

The indicator light will come on when the system is activated.

If the alarm has been activated and the key is not in the ignition switch, all the side doors and back door will re−lock automatically.

After one minute, the alarm will automatically stop and the indicator light will starts flashing again.

Reactivating the alarm

Once set, the system automatically resets the alarm after the alarm stops.

The alarm will activate again under the same circumstances described in “Activating the system”.

Stopping the alarm

The alarm will be stopped by the following two ways:

- Turn the ignition key from the “LOCK” to “ON” position.
- Unlock any of the side doors or back door with the key or wireless remote control transmitter.

These ways cancel the system at the same time.

TESTING THE SYSTEM

1. Open all the windows.
2. Set the system as described above. The side doors and back door should be locked with the key or wireless remote control transmitter. Be sure to wait until the indicator light goes off or starts flashing.
3. Unlock any side door from the inside. The system should activate the alarm.
4. Stopping the alarm as described above.
5. Repeat this operation for the other doors and hood. When testing on the hood, also check that the system is activated when the battery terminal is disconnected and then reconnected.

If the system does not work properly, have it checked by your Toyota dealer.

Fuel tank cap

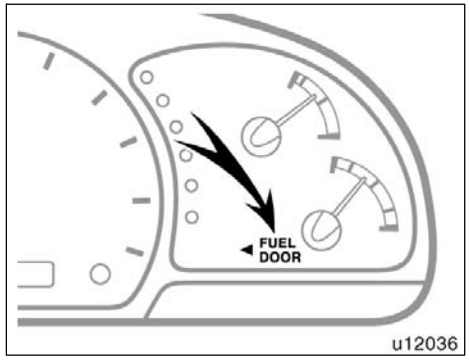

This indicates that the fuel filler door is on the left side of your vehicle.

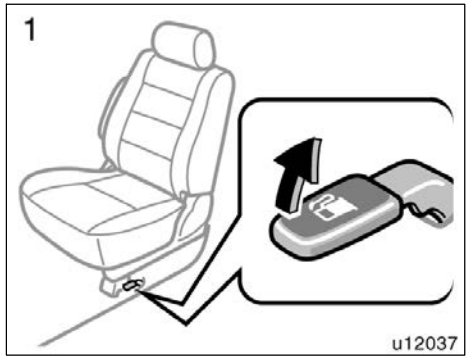

1. To open the fuel filler door, pull the lever.

When refueling, turn off the engine.

⚠ CAUTION

- **Do not smoke, cause sparks or allow open flames when refueling. The fumes are flammable.**
- **When opening the cap, do not remove the cap quickly. In hot weather, fuel under pressure could cause injury by spraying out of the filler neck if the cap is suddenly removed.**

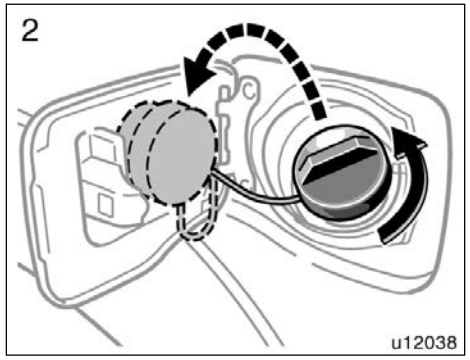

2. To remove the fuel tank cap, turn the cap slowly counterclockwise, then pause slightly before removing it. After removing the cap, hang it on the cap hanger.

It is not unusual to hear a slight swoosh when the cap is opened. When installing, turn the cap clockwise till you hear a click.

If the cap is not tightened securely, the malfunction indicator lamp comes on. Make sure the cap is tightened securely.

The indicator lamp goes off after driving several times. If the indicator lamp does not go off, contact your Toyota dealer as soon as possible.

⚠ CAUTION

- **Make sure the cap is tightened securely to prevent fuel spillage in case of an accident.**
- **Use only a genuine Toyota fuel tank cap for replacement. It is designed to regulate fuel tank pressure.**

Electric moon roof

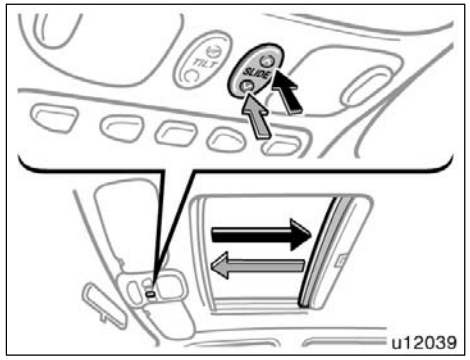

Sliding operation

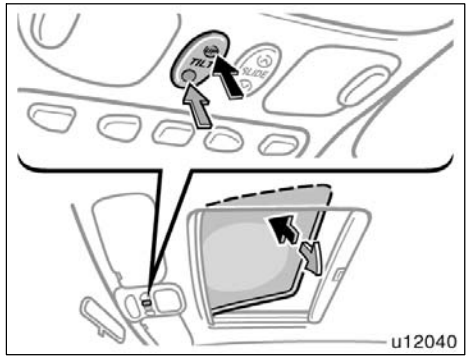

Tilting operation

OPERATING FROM INSIDE

To operate the moon roof, use the switches between the personal lights.

The moon roof works when the ignition switch is in the “ON” position.

Key off operation: If all the doors are closed, it works for 43 seconds even after the ignition switch is turned off. It stops working when any of the doors is opened.

Sun shade operation—

The sun shade can be opened or closed by hand.

Sliding operation—

To open: Push the switch on the “◻” (rear) side.

The roof will open and stop partway 135 mm (5.3 in.) from the fully opened position. When you push “◻” (rear) side again, the moon roof will open fully. To stop the roof partway, push the same side or “◻” (front) side while the roof is moving.

As driving with the moon roof opened fully will cause wind throbs, we recommend you to drive with the moon roof partway 135 mm (5.3 in.) from the fully opened position.

The sun shade will be opened together with the roof.

To close: Push the switch on the “◻” (front) side.

The roof will fully close. To stop the roof partway, push the same side or “◻” (rear) side briefly.

Tilting operation—

To tilt up: Push the switch on the “UP” side.
To lower: Push the switch on the opposite side of “UP”.

You may stop the moon roof at any desired position. The roof will move while the switch is being pushed and stop when released.

Jam protection function: During closing operation, the moon roof stops and opens half way if something gets caught between the moon roof and frame.

If the moon roof receives a strong impact, this function may work even if nothing is caught.

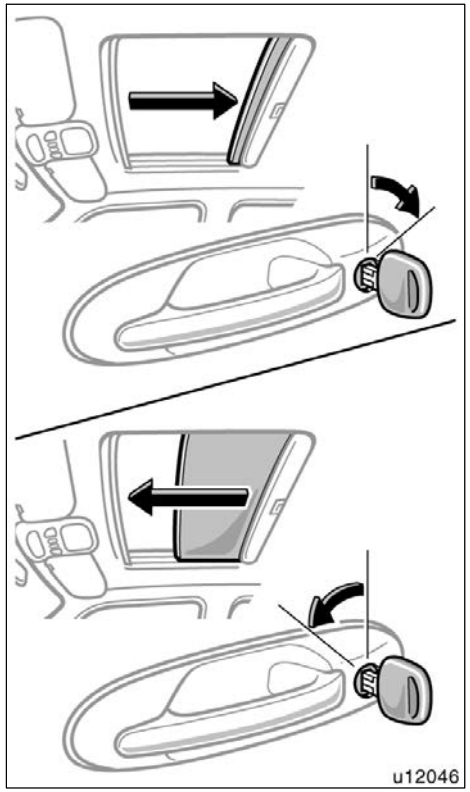

OPERATING FROM OUTSIDE

The moon roof can be opened and closed with the key operation in the driver's door keyhole.

To open: Turn the key fully backward and hold it.

After the door is unlocked, the moon roof begins to open. To stop in the middle, return the key.

To close: Turn the key fully forward and hold it.

After the door is locked, the moon roof begins to close. To stop in the middle, return the key.

This door key linked operation for sliding operation can be erased or changed into the door key linked operation for tilting operation. For details, contact your Toyota dealer.

⚠ CAUTION

To avoid serious personal injury, you must do the following.

- **While the vehicle is moving, always keep the heads, hands and other parts of the bodies of all occupants away from the roof opening. Otherwise, they could be seriously injured if the vehicle stops suddenly or if the vehicle is involved in an accident.**
- **Always make sure nobody places his/her head, hands and other parts of the body in the roof opening before you close the roof. If someone's neck, head or hands gets caught in the closing roof, it could result in a serious injury. When anyone closes the roof, first make sure it is safe to do so.**
- **Never leave small children alone in the vehicle, especially with the ignition key still inserted. They could use the moon roof switch and get trapped in the roof opening. Unattended children can be involved in serious accidents.**
- **Never sit on top of the vehicle around the roof opening.**

SECTION 1–3

OPERATION OF INSTRUMENTS AND CONTROLS

Seats, Seat belts, Steering wheel and Mirrors

Seats 36
Front seats 36
Rear seats 39
Head restraints 52
Armrests 53
Seat heaters 54
Seat belts 55
SRS driver and front passenger airbags 68
SRS side and curtain shield airbags 75
Child restraint 82
Tilt steering wheel 103
Outside rear view mirrors 104
Anti−glare inside rear view mirror 106
Sun visors 107

Seats

While the vehicle is being driven, all vehicle occupants should have the seatback upright, sit well back in the seat and properly wear the seat belts provided.

⚠ CAUTION

- **Do not drive the vehicle unless the occupants are properly seated. Do not allow sitting on top of a folded−down seatback, or in the luggage compartment or cargo area. Persons not properly seated and/or properly restrained by seat belts can be severely injured in the event of emergency braking or a collision.**
- **During driving, do not allow passengers to stand up or move around between seats. Severe injuries can occur in the event of emergency braking or a collision.**

Front seats—
—Front seat precautions
(on vehicles with SRS side airbags)

⚠ CAUTION

The SRS side airbags are installed in the driver and front passenger seats. Observe the following precautions.

- **Do not lean against the front door when the vehicle is in use. The side airbag inflates with considerable speed and force; you may be killed or seriously injured.**
- **Do not use accessories for the seats which cover the parts where the side airbags inflate. Such accessories may prevent the side airbags from activating correctly, causing death or serious injury.**
- **Do not modify or replace the seats or upholstery of the front seats with the side airbags. Such changes may disable the system or cause the side airbags to inflate accidentally, resulting in death or serious injury. Consult your Toyota dealer if you insist on modifications of this kind.**

—Seat adjustment precautions

Adjust the driver's seat so that the foot pedals, steering wheel and instrument panel controls are within easy reach of the driver.

⚠ CAUTION

- **Adjustments should not be made while the vehicle is moving, as the seat may unexpectedly move and cause the driver to lose control of the vehicle.**
- **When adjusting the seat, be careful that the seat does not hit a passenger or luggage.**
- **After adjusting the seat position, try sliding it forward and backward to make sure it is locked in position.**
- **After adjusting the seatback, push back your body to make sure it is locked in position.**
- **Do not put objects under the seats as they may interfere with the seat−lock mechanism or unexpectedly push up the seat position adjusting lever; the seat may suddenly move, causing the driver to lose control of the vehicle.**

—Adjusting front seats (manual seat)

à While adjusting the seat, do not put your hands under the seat or near the moving parts. You may catch and injure your hands or fingers.

1. SEAT POSITION ADJUSTING LEVER

Hold the center of the lever and pull it up. Then slide the seat to the desired position with slight body pressure and release the lever.

2. SEAT CUSHION ANGLE ADJUSTING KNOB

Turn the knob either way.

3. SEATBACK ANGLE ADJUSTING LEVER

Lean forward and pull the lever up. Then lean back to the desired angle and release the lever.

—Adjusting front seats (power seat)

⚠ CAUTION

To reduce the risk of sliding under the lap belt during a collision, avoid reclining the seatback any more than needed. The seat belts provide maximum protection in a frontal or rear collision when the driver and the passenger are sitting up straight and well back in the seats. If you are reclined, the lap belt may slide past your hips and apply restraint forces directly to the abdomen. Therefore, in the event of a frontal collision, the risk of personal injury may increase with increasing recline of the seatback.

1. SEAT POSITION AND SEAT CUSHION ANGLE ADJUSTING SWITCH

Move the control switch in the desired direction.

Releasing the switch will stop the seat at that position.

Do not place anything under the front seats. It might interfere with the seat−lock mechanism.

2. SEATBACK ANGLE ADJUSTING SWITCH

Move the control switch in the desired direction.

Releasing the switch will stop the seatback at that position.

Rear seats—
—Rear seat precautions

⚠ CAUTION

To reduce the risk of sliding under the lap belt during a collision, avoid reclining the seatback any more than needed. The seat belts provide maximum protection in a frontal or rear collision when the driver and the passenger are sitting up straight and well back in the seats. If you are reclined, the lap belt may slide past your hips and apply restraint forces directly to the abdomen. Therefore, in the event of a frontal collision, the risk of personal injury may increase with increasing recline of the seatback.

3. SEAT LUMBAR SUPPORT ADJUSTING SWITCH

Push the control switch in the desired direction.

The amount of lumber support will change as long as the switch is pushed.

⚠ CAUTION

- **Adjustment should not be made while the vehicle is moving.**
- **When adjusting the seat, be careful not to hit the seat against a passenger or luggage.**
- **Third seats only: Adjust both seat cushions to the same position and align both seatbacks at the same angle when a person sits in the third seat center position. Otherwise, the person cannot wear the seat belt properly and this may cause serious injuries in a collision.**
- **When folding up the third seats, do not fold down or up the second seats.**
- **After adjusting the seat position, try sliding it forward and backward to make sure it is lock in position.**
- **After adjusting the seatback, push back your body to make sure it is locked in position.**

- **Do not allow sitting on top of a folded−down seatback, or in the luggage compartment while driving. Persons not properly seated and/or properly restrained by seat belts can be severely injured in the event of emergency braking or a collision.**
- **Do not operate any equipment in the luggage compartment while driving. People not properly seated and/or properly restrained by seat belts can be severely injured in the event of emergency braking or a collision.**
- **Do not load luggage with only the seatback folded down. Do not fail to swing the whole seat up in such a case. Luggage sliding forward during braking may cause an accident or severe injury.**

—Adjusting second seat

à When returning seats to their original position, observe the following precautions in order to prevent personal injury in a collision or sudden stop:

Be careful not to get your hands or feet pinched in the seat.

Make sure the seat is securely locked by pushing forward and rearward on the top of the seatback or by trying to pull up the edge of the bottom cushion. Failure to do so will prevent the seat belt from operating properly.

Make sure the seat belts are not twisted or caught under the seat and are arranged in their proper position and are ready to use.

Folding the seats up will enlarge the luggage compartment. See “Luggage stowage precautions” on page 222 in Section 2 for precautions in loading luggage.

u13043

SEATBACK ANGLE ADJUSTING LEVER

Lean forward and pull the lever up. Then lean back to the desired angle and release the lever.

⚠ CAUTION

To reduce the risk of sliding under the lap belt during a collision, avoid reclining the seatback any more than needed. The seat belts provide maximum protection in a frontal or rear collision when the passengers are sitting up straight and well back in the seats. If you are reclined, the lap belt may slide past your hips and apply restraint forces directly to the abdomen. Therefore, in the event of a frontal collision, the risk of personal injury may increase with increasing recline of the seatback.

—Moving second seat for third seat entry

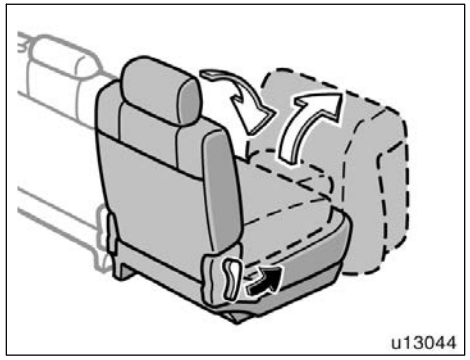

Right side

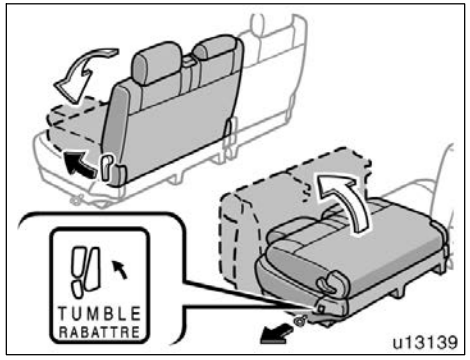

Left side

For easy access to the third seats, do this.

Right side—

Fold down the seatback while pulling the seatback angle adjust lever and lift up the seat.

To return the folded seat to the original position, bring the seatback upright by pulling the seatback angle adjusting lever.

Left side—

Fold down the seatback while pulling the seatback angle adjusting lever and lift up the whole seat while pulling the seat lock release lever on the side.

⚠ CAUTION

Use the seat lock release lever on the side only when folding up the seat.

To return the folded seat to the original position, reverse the above operation.

After passengers are in, return the seat until it locks.

⚠ CAUTION

After returning the seat, make sure the seat is securely locked by pushing forward and rearward on the top of the seatback or by trying to pull up the edge of the bottom cushion. Failure to do so will prevent seat belt from operating properly.

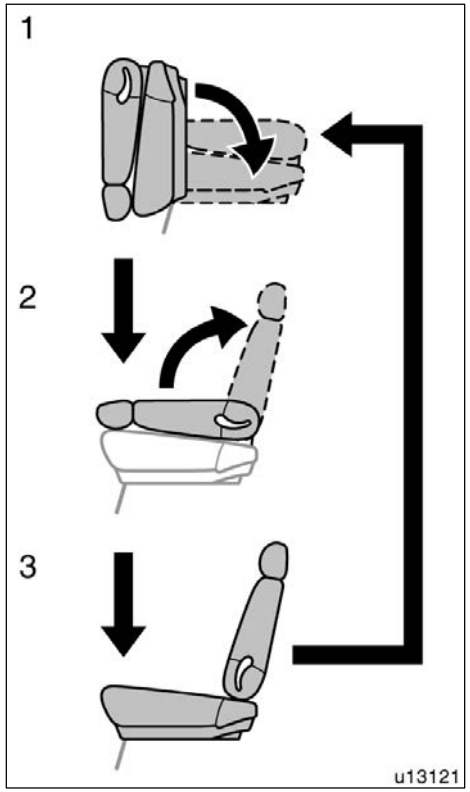

Right side only—

When returning the folded−up second seat to its original position:

Once the seat is moved from the folded−up position to the folded−down position, it cannot be directly returned to the folded−up position again. (It is impossible to operate the seat in the order 1→2→1.) When you return the folded−down seat (position 2) to its folded−up position (position 1), you must return the folded−down seat (position 2) to its original position (position 3) once. (It is possible to operate the seat in the order 1→2→3→1.)

—Folding up second seats

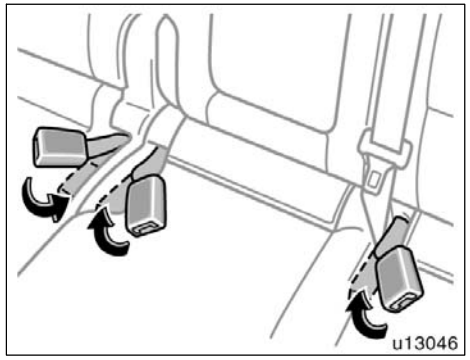

BEFORE FOLDING UP SECOND SEATS

Stow the second seat belt buckles as shown in the illustration.

This prevents the buckles from falling out when you fold up the seatback.

NOTICE
The seat belt buckles must be stowed before you fold up the second seat.

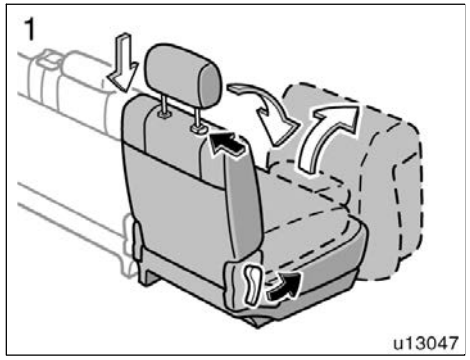

Right side

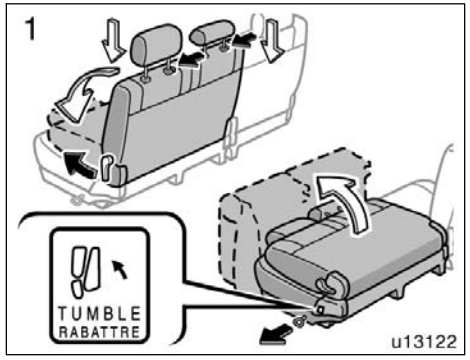

Left side

FOLDING UP SECOND SEATS

Right side—

1. **Lower the head restraint to the lowest position. Fold down the seatback while pulling the seatback angle adjusting lever and swing the whole seat up and forward.**

Left side—

1. **Lower the head restraints to the lowest position. Fold down the seatback while pulling the seatback angle adjusting lever and swing the whole seat up and forward while pulling the seat lock release lever on the side.**

⚠ CAUTION

- **Make sure people or luggage are clear from the seat. Then, hold the seat and slowly move it. Otherwise, people may be injured or luggage may be damaged, if the seat hits them.**
- **To avoid serious injury, do not sit on the folded seatback.**
- **Left side only—Use the seat lock release lever on the side only when folding up the seat.**

Vehicles without third seats—Folding up the rear seats will enlarge the luggage compartment. See “Luggage stowage precautions” on page 222 in Section 2 for precautions in loading luggage.

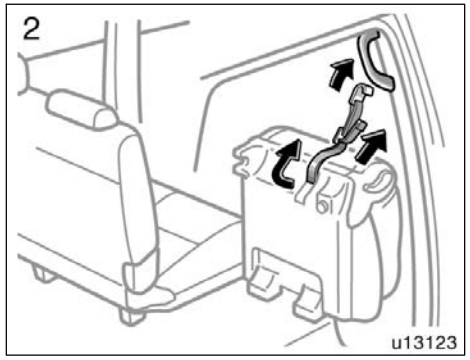

2. Take the holding strap out of its hole, and hook the strap onto the assist grip. Then, pull the strap on the free end to secure the seat.

When returning the second seat to its original position, put the holding strap into the hole.

⚠ CAUTION

When folding up the second seats, fix the seats securely by adjusting the length of the holding strap. Failure to do so may cause an unexpected accident or severe injury in the event of emergency braking or a collision.

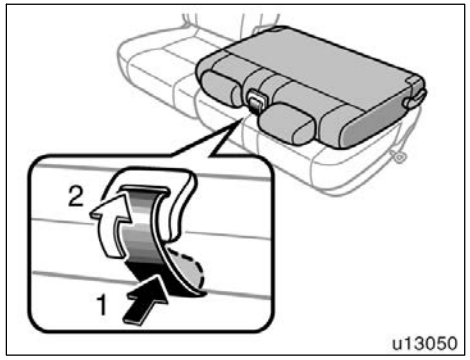

WHEN RETURNING THE SECOND SEATS

If you cannot raise the seatback because of the locked seat belt, do not try it forcibly. Release the lock of the seat belt in the following way. Push in the lower front edge of the seatback cushion to slacken the seat belt (1) and let the seat belt retract a little (2).

⚠ CAUTION

When returning seats to their original position, observe the following precautions in order to prevent personal injury in a collision or sudden stop:

- **Be careful not to get your hands or feet pinched in the seat.**
- **Make sure the seat is securely locked by pushing forward and rearward on the top of the seatback or by trying to pull up the edge of the bottom cushion. Failure to do so will prevent the seat belt from operating properly.**
- **Make sure the seat belts are not twisted or caught in the seatback and are arranged in their proper position and are ready to use.**

—Adjusting third seats

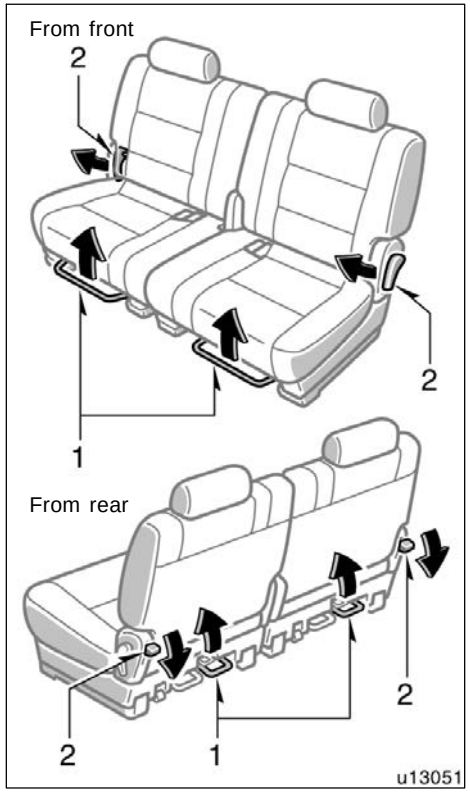

1. SEAT POSITION ADJUSTING LEVER

From front—

Hold the center of the lever and pull it up. Then slide the seat to the desired position with slight body pressure and release the lever.

From rear—

Pull the lever up. Then slide the seat to the desired position and release the lever.

When a person sits in the third seat center position, adjust both seat cushions to the same position.

Do not place anything under the seats. It might interfere with the seat−lock mechanism.

2. SEATBACK ANGLE ADJUSTING LEVER

From front—

Lean forward and pull the lever toward you. Then lean back to the desired angle and release the lever.

From rear—

Push down the lever. Push the seatback forward or pull it backward to the desired angle and release the lever.

When a person sits in the third seat center position, align both seatbacks at the same angle.

⚠ CAUTION

- **Adjust both seat cushions to the same position and align both seatbacks at the same angle when a person sits in the third seat center position. Otherwise, the person cannot wear the seat belt properly and this may cause serious injuries in a collision.**
- **To reduce the risk of sliding under the lap belt during a collision, avoid reclining the seatback any more than needed. The seat belts provide maximum protection in a frontal or rear collision when the passengers are sitting up straight and well back in the seats. If you are reclined, the lap belt may slide past your hips and apply restraint forces directly to the abdomen. Therefore, in the event of a frontal collision, the risk of personal injury may increase with increasing recline of the seatback.**

—Folding up third seats

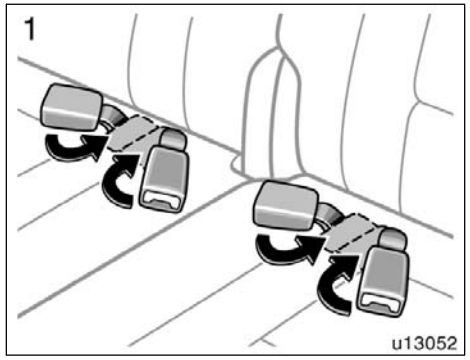

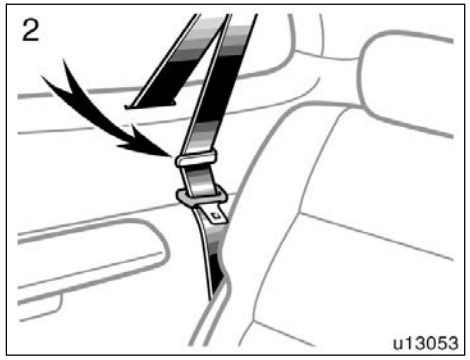

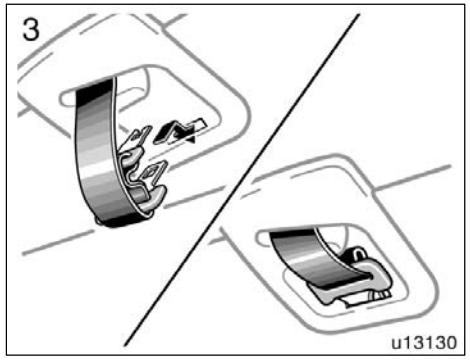

BEFORE FOLDING UP THIRD SEATS

1. **Stow the third seat belt buckles as shown in the illustration.**

This prevents the buckles from falling out when you fold up the third seats.

NOTICE
The seat belt buckles must be stowed before you fold up the third seats.

2. **Make sure the shoulder belt passes through the hanger when folding the third seats.**

This prevents the shoulder belt from being damaged.

⚠ **CAUTION**
The seat belt must be removed from the hanger when the seat belt is in use.

3. **To stow the center seat belt, pull it slightly out of its cover. It will automatically roll back partway. Roll the seat belt backwards as shown above and insert it into the slot of its cover. Make sure the tabs are securely locked in the cover.**

NOTICE
The seat belt must be stowed before you fold the seatback.

⚠ CAUTION

When folding up the third seats, do not fold down or up the second seats.

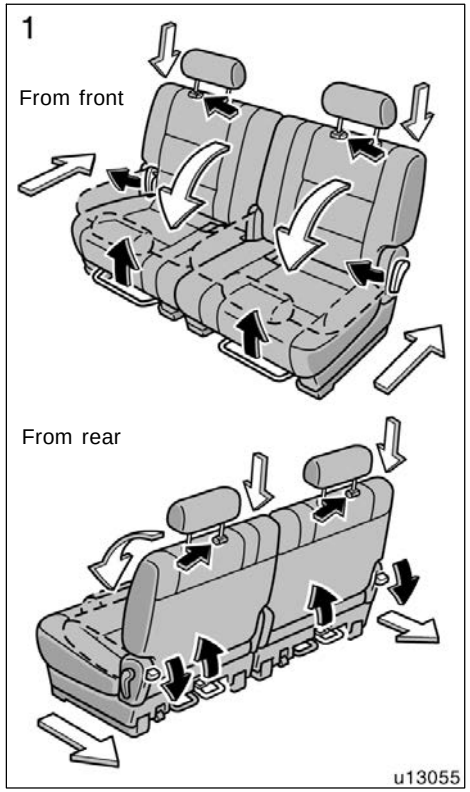

FOLDING UP THIRD SEATS

1. **Move the seat to the rear−most position. Lower the head restraint to the lowest position. Unlock the seatback and fold it down.**

⚠ CAUTION

To avoid serious injury, do not sit on the folded seatback.

Folding up the third seats will enlarge the luggage compartment. See “Luggage stowage precautions” on page 222 in Section 2 for precautions in loading luggage.

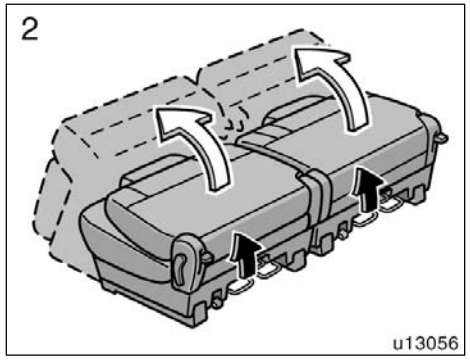

2. **Unlock the seat leg by pulling the lock release lever on the rear of the seat cushion and swing the whole seat up and forward.**

⚠ CAUTION

- **Make sure people or luggage are clear from the seat. Then, hold the seat and slowly move it. Otherwise, people may be injured or luggage may be damaged, if the seat hits them.**
- **When folding up the seat, be careful not to get your hands or feet pinched in the seat.**

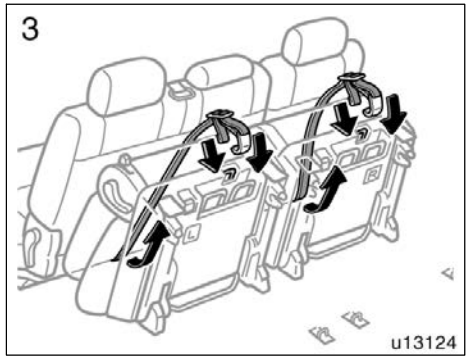

3. **Take the holding strap out of its hole which is on the rear of the second seat (For the location of the strap, see "—Folding up second seats" on page 42 in this section.), and hang the strap onto the anchor. Next, pull the strap on the free end to secure the seat.**

When returning the third seats to its original position, put the holding strap into the hole.

CAUTION

- **When folding up the third seats, fix the seats securely by adjusting the length of the holding strap. Failure to do so may cause an unexpected accident or severe injury in the event of emergency braking or a collision.**
- **When returning seats to their original position, observe the following precautions in order to prevent personal injury in a collision or sudden stop:**

  Be careful not to get your hands or feet pinched in the seat.

  Make sure the seat is securely locked by pushing forward and rearward on the top of the seatback or by trying to pull up the edge of the bottom cushion. Failure to do so will prevent the seat belt from operating properly.

  Make sure the seat belts are not twisted or caught under the seat and are arranged in their proper position and are ready to use.

—Removing third seats

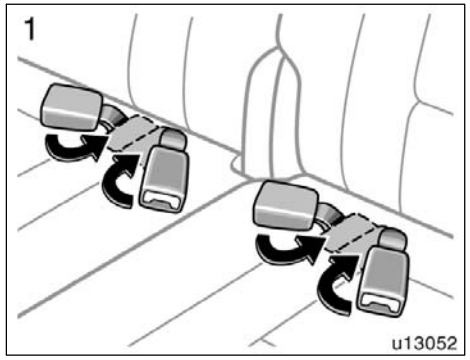

BEFORE REMOVING THIRD SEATS

1. **Stow the third seat belt buckles as shown in the illustration.**

This prevents the buckles from falling out when you remove the third seats.

NOTICE

The seat belt buckles must be stowed before you remove the third seats.

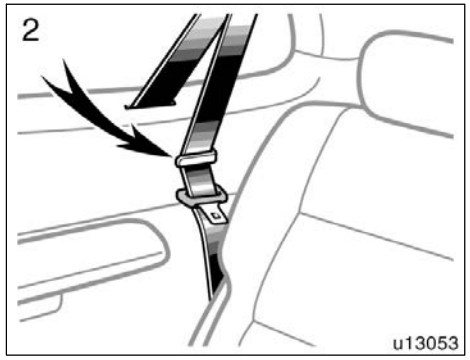

2. **When removing the third seats, pass the third seat belts through the hangers.**

This prevents the shoulder belt from being damaged.

CAUTION

The seat belt must be removed from the hanger when the seat belts is in use.

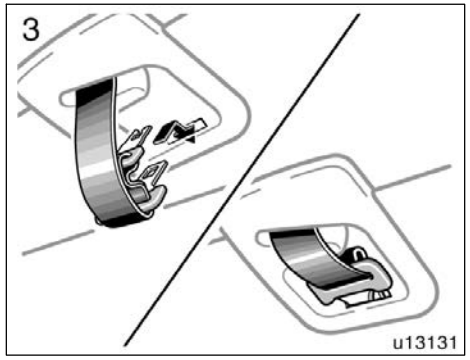

3. To stow the center seat belt, pull it slightly out of its cover. It will automatically roll back partway. Roll the seat belt backwards as shown above and insert it into the slot of its cover. Make sure the tabs are securely locked in the cover.

NOTICE
The seat belt must be stowed before you fold the seatback.

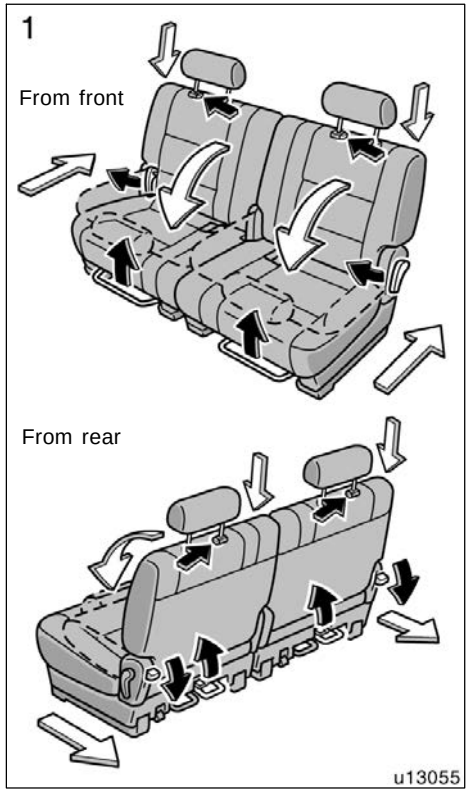

REMOVING THIRD SEATS

1. Move the seat to the rear−most position. Lower the head restraint to the lowest position. Unlock the seatback and fold it down.

⚠ CAUTION
Make sure people or luggage are clear from the seat. Then, hold the seat and slowly move it. Otherwise, people may be injured or luggage may be damaged, if the seat hits them.

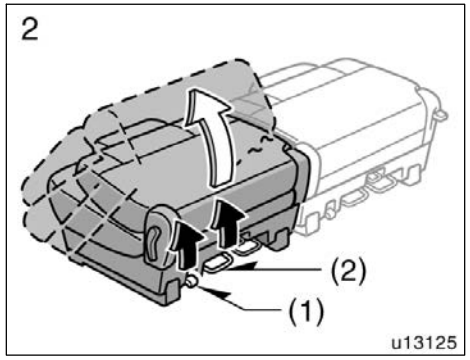

2. Pull the center handle (2) up while holding up the left side lever (1) under the seat, lift the seat and remove it toward you.

Removing the third seats will enlarge the luggage compartment. See “Luggage stowage precautions” on page 222 in Section 2 for precautions in loading luggage.

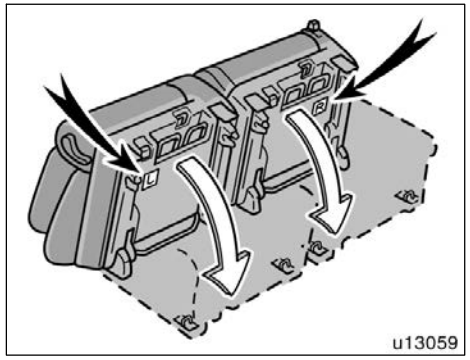

To reinstall the third seats, do this;

1. **Hook the front legs to the front anchors.**
2. **Lock the rear legs on the rear anchors.**

The direction marked “L” or “R”, which shows the location, is on the rear of each seat cushion, so install each seat according to the mark.

⚠ CAUTION

When removing or reinstallingthe seat, observe the following to prevent personal injury:

- **Do not fold or remove the seat while the vehicle is moving.**
- **Be careful not to get your hands or feet pinched in the seat.**
- **Be careful not to hit the removed seat against a person or drop it on yourself.**
- **After folding or installing the seat, push it forward and backward to make sure it is locked in position.**

To prevent personal injury in a collision or sudden stop:

- **Do not sit on or place anything on the folded seatback while driving.**
- **Do not leave the removed seat loose in the vehicle.**
- **Do not try to sit on or place anything on the removed seat.**
- **When reinstalling the seat, be careful not to hit the seat against you or inside of the vehicle.**

- When reinstalling the seat, make sure the seat is securely locked by pushing forward and rearward on the top of the seatback or by trying to pull up the edge of the bottom cushion. Failure to do so will prevent the seat belt from operating properly.
- Install each seat in the same position from which it was removed. Failure to do so will prevent third seat occupants from using seat belts properly.
- Do not reinstall the seat with its back facing forward.
- Make sure the seat is securely locked in the proper position.

NOTICE

Avoid putting heavy loads on the removed seat. The metallic tips of the seat leg may be damaged and the seat cannot be reinstalled.

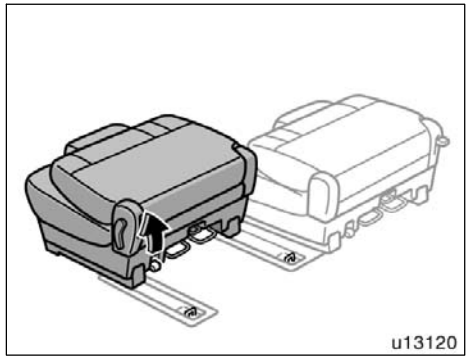

If the seat legs are locked in the wrong position, pull up the left side lever under the seat. Then lift and remove the seat.

Head restraints

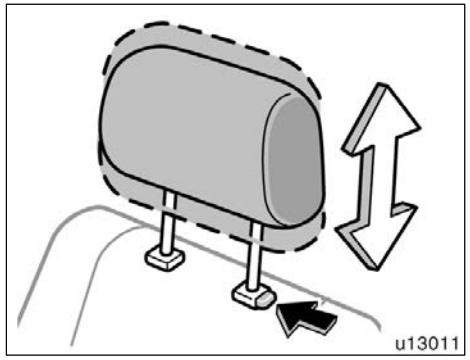

Front

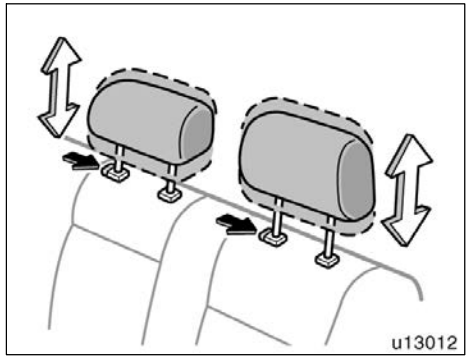

Second

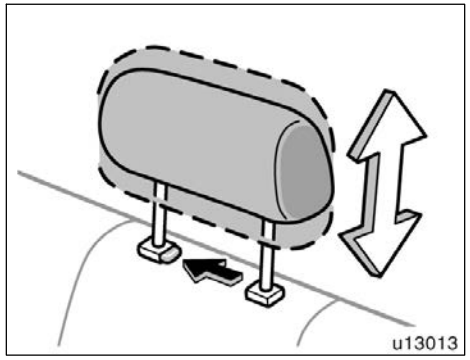

Third

For your safety and comfort, adjust the head restraint before driving.

To raise: Pull it up.
To lower: Push it down while pressing the lock release button.

Center head restraint of the second seats—When an occupant sits on the center position of the second seats, always pull up the center head restraint of the second seats to the lock position.

The head restraint is most effective when it is close to your head. Therefore, using a cushion on the seatback is not recommended.

CAUTION

- **Adjust the center of the head restraint so that it is closet to the top of your ears.**
- **After adjusting the head restraint, make sure it is locked in position.**
- **Do not drive with the head restraints removed.**

Armrests

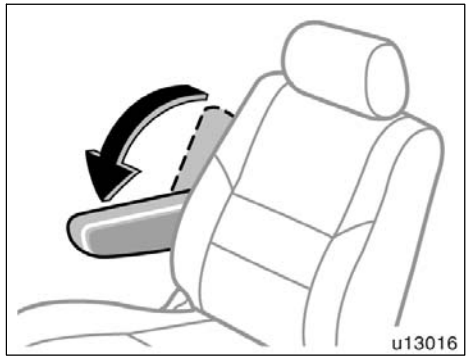

Front

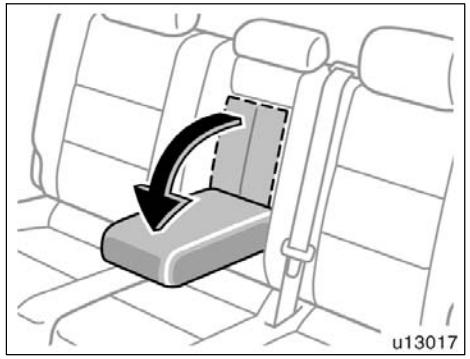

Second

To use the armrest, do this.

Front—Pull the armrest down as shown in the illustration.

Second—Pull the armrest out as shown in the illustration.

NOTICE
To prevent damage to the armrest, avoid putting heavy loads on it.

Seat heaters

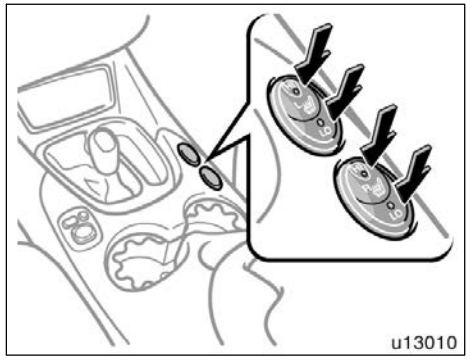

To turn on the seat heater, push the switch to "HI" (high heating temperature) or "LO" (low heating temperature).

The key must be in the "ON" position.

Pushing lightly on the opposite side will turn it off.

⚠ CAUTION

Occupants must use caution when operating the seat heater because it may make them feel too hot or cause burns at low temperatures (erythema, varicella). Use extra caution for;

- **Babies, small children, elderly persons, sick persons or handicapped persons**
- **Persons who have delicate skin**
- **Persons who are exhausted**
- **Person who have taken alcohol or drugs which induce sleep (sleeping drug, cold remedy, etc.)**

To prevent the seat overheating, do not use the seat heater with a blanket, cushion, or other insulating objects which cover the seat.

NOTICE

- ***Do not put unevenly weighed objects on the seat and do not stick sharp objects (needles, nails, etc.) into the seat.***
- ***When cleaning the seats, do not use organic substances (paint thinner, benzine, alcohol, gasoline, etc.). They may damage the heater and seat surface.***
- ***To prevent the battery from being discharge, turn the switch off when the engine is not running.***

Seat belts—
—Seat belt precautions

Toyota strongly urges that the driver and passengers in the vehicle be properly restrained at all times with the seat belts provided. Failure to do so could increase the chance of injury and/or the severity of injury in accidents.

Child. Use a child restraint system appropriate for the child until the child becomes large enough to properly wear the vehicle's seat belts. See "Child restraint" on page 82 in this section for details.

If a child is too large for a child restraint system, the child should sit in the rear seat and must be restrained using the vehicle's seat belt. According to accident statistics, the child is safer when properly restrained in the rear seat than in the front seat.

If a child must sit in the front seat, the seat belts should be worn properly. If an accident occurs and the seat belts are not worn properly, the force of the rapid inflation of the airbag may cause death or serious injury to the child.

Do not allow the child to stand up or kneel on either rear or front seats. An unrestrained child could suffer serious injury or death during emergency braking or a collision. Also do not let the child sit on your lap. It does not provide sufficient restraint.

Pregnant woman. Toyota recommends the use of a seat belt. Ask your doctor for specific recommendations. The lap belt should be worn securely and as low as possible over the hips and not on the waist.

Injured person. Toyota recommends the use of a seat belt. Depending on the injury, first check with your doctor for specific recommendation.

⚠ CAUTION

Persons should ride in their seats properly wearing their seat belts whenever the vehicle is moving. Otherwise, they are much more likely to suffer serious bodily injury or death in the event of sudden braking or a collision.

When using the seat belts, observe the following:

- **Use the belt for only one person at a time. Do not use a single belt for two or more people—even children.**
- **Avoid reclining the seatbacks too much. The seat belts provide maximum protection when the seatbacks are in the upright position. (Refer to the seat adjustment instructions.)**
- **Be careful not to damage the belt webbing or hardware. Take care that they do not get caught or pinched in the seat or side doors.**
- **Inspect the belt system periodically. Check for cuts, fraying, and loose parts. Damaged parts should be replaced. Do not disassemble or modify the system.**
- **Keep the belts clean and dry. If they need cleaning, use a mild soap solution or lukewarm water. Never use bleach, dye, or abrasive cleaners—they may severely weaken the belts. (See "Cleaning the interior" on page 267 in Section 5.)**
- **Replace the belt assembly (including bolts) if it has been used in a severe impact. The entire assembly should be replaced even if damage is not obvious.**

—Front and rear seat belts

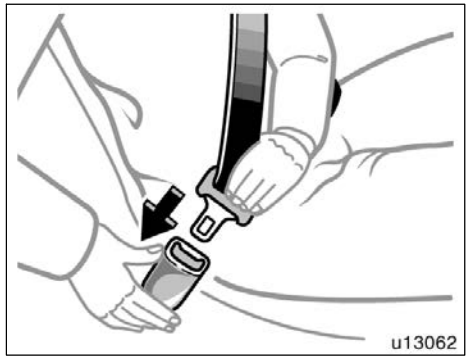

Adjust the seat as needed and sit up straight and well back in the seat. To fasten your belt, pull it out of the retractor and insert the tab into the buckle.

You will hear a click when the tab locks into the buckle.

The seat belt length automatically adjusts to your size and the seat position.

The retractor will lock the belt during a sudden stop or on impact. It also may lock if you lean forward too quickly. A slow, easy motion will allow the belt to extend, and you can move around freely.

If the seat belt cannot be pulled out of the retractor, firmly pull the belt and release it. You will then be able to smoothly pull the belt out of the retractor.

When a passenger's shoulder belt is completely extended and is then retracted even slightly, the belt is locked in that position and cannot be extended. This feature is used to hold the child restraint system securely. (For details, see "Child restraint" on page 82 in this section.) To free the belt again, fully retract the belt and then pull the belt out once more.

CAUTION

- **After inserting the tab, make sure the tab and buckle are locked and that the belt is not twisted.**
- **Do not insert coins, clips, etc. in the buckle as this may prevent you from properly latching the tab and buckle.**
- **If the seat belt does not function normally, immediately contact your Toyota dealer. Do not use the seat until the seat belt is fixed. It cannot protect an adult occupant or your child from injury.**

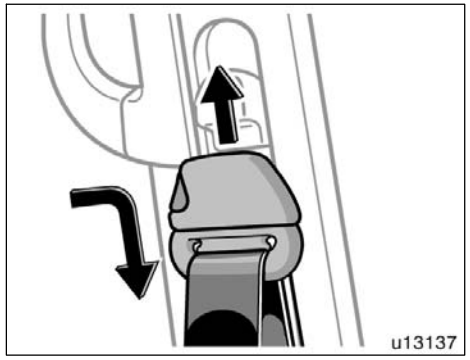

Seat belts with an adjustable shoulder anchor—

Adjust the shoulder anchor position to your size.

To raise: Slide the anchor up.
To lower: Push in the lock release button and slide the anchor down.

After adjustment make sure the anchor is locked in position.

CAUTION

Always make sure the shoulder belt is positioned across the center of your shoulder. The belt should be kept away from your neck, but not falling off your shoulder. Failure to do so could reduce the amount of protection in an accident and cause serious injuries in a collision.

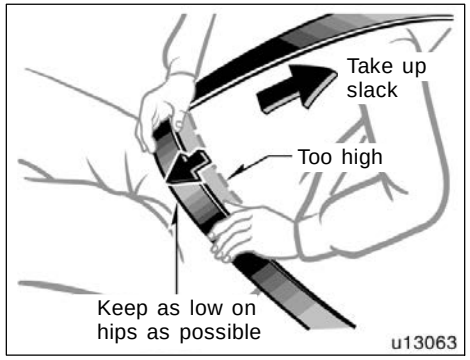

Adjust the position of the lap and shoulder belts.

Position the lap belt as low as possible on your hips—not on your waist, then adjust it to a snug fit by pulling the shoulder portion upward through the latch plate.

⚠ CAUTION

- **Both high−positioned lap belts and loose−fitting belts could cause serious injuries due to sliding under the lap belt during a collision or other unintended result. Keep the lap belt positioned as low on hips as possible.**
- **For your safety, do not place the shoulder belt under your arm.**

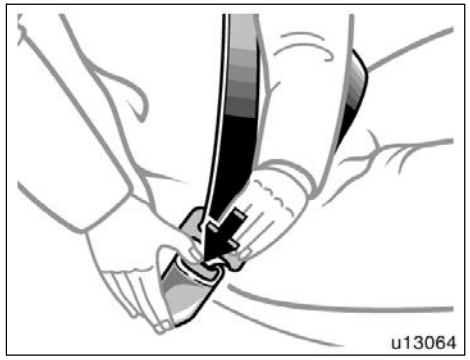

To release the belt, press the buckle−release button and allow the belt to retract.

If the belt does not retract smoothly, pull it out and check for kinks or twists. Then make sure it remains untwisted as it retracts.

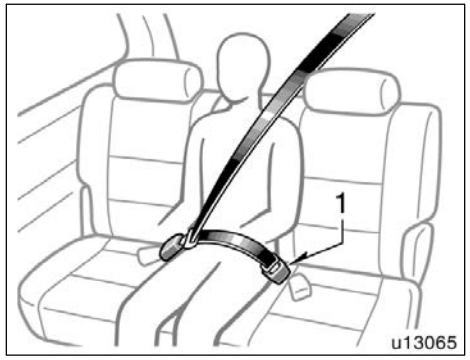

CENTER SEAT BELT OF THE THIRD SEATS

The center seat belt of the third seats is a 3−point type restraint with 2 buckles. Both seat belt buckles must be correctly located and securely latched for proper operation.

Make sure that buckle 1 (with light gray buckle−release button) is securely latched for ready use of the center seat belt.

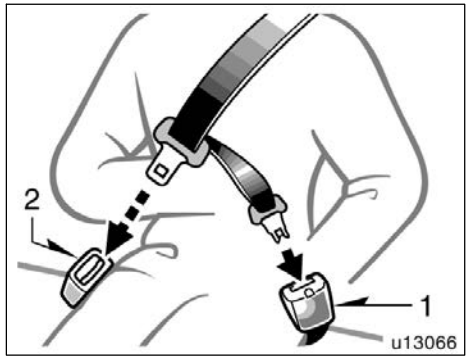

Two buckles and tabs for rear center seat belt

The two buckles for the rear center seat belt of the third seats are distinguished with colors of the buckle release button. Also the two tabs have different shape for its end so that the belt is not buckled in the wrong place.

Buckle 1 (with red buckle−release button)—Properly matches with concave end tab
Buckle 2 (with light gray buckle−release button)—Properly matches with round end tab

⚠ CAUTION

Make sure the both buckles are correctly located and securely latched. Failure to properly match the buckle and tab may cause severe injury in case of an accident or a collision.

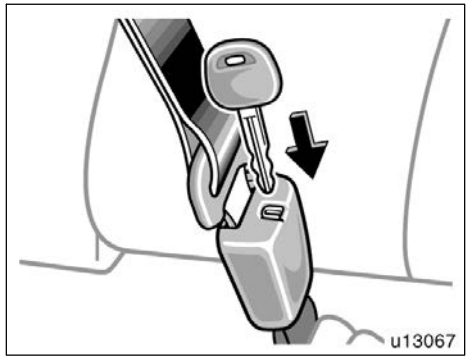

To release the concave end tab, insert the key into the hole on buckle 1 (with light gray buckle−release button) and allow the belt to retract.

CAUTION

Do not use the center seat belt of the third seats with either buckle released. Fastening only the shoulder belt or lap belt may cause severe personal injury in case of sudden braking or a collision.

—Stowing seat belt buckles of the second and third seats

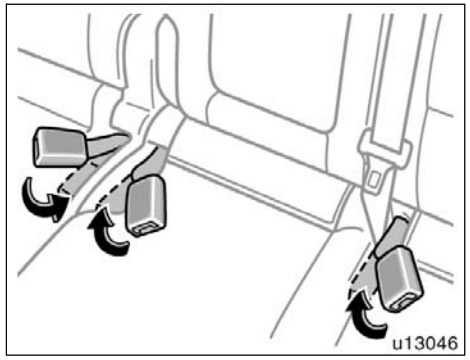

Second

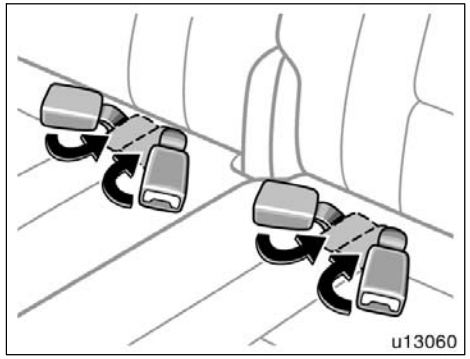

Third

The seat belt buckles of the second and third seats can be stowed when not in use.

Seat belt buckles must be stowed before you fold the seat back. (See “—Folding up second seats” on page 42, “—Folding up third seats” on page 46 and “—Removing third seats” on page 49 in this section.)

—Stowing the center seat belt of the third seats

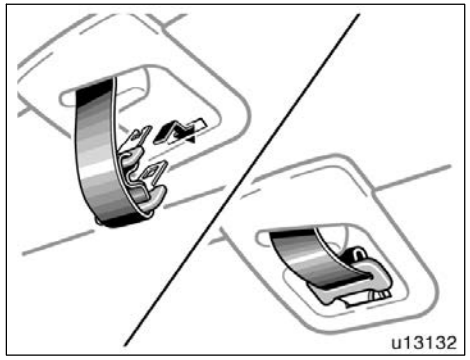

STOWING THE CENTER SEAT BELT OF THE THIRD SEATS

To stow the center seat belt of the third seats, pull the seat belt out of its cover. It will automatically roll back partway. Roll the seat belt backward and insert it into the slot of its cover as shown above. Make sure the tabs are securely locked in the cover.

Seat belt must be stowed before you fold the seatback. (See “—Folding up third seats” on page 46 or “—Removing third seats” on page 49 in this section.)

NOTICE
Stow the center seat belt of the third seats except when you are wearing it.

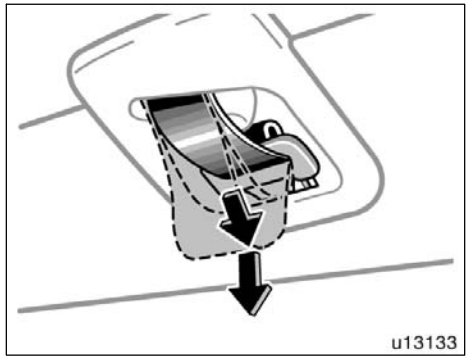

PULLING OUT THE CENTER SEAT BELT OF THE THIRD SEATS

To use the center seat belt of the third seats, pull the belt out a little and then pull the tabs out from the cover.

—Seat belt extender

If your seat belt cannot be fastened securely because it is not long enough, a personalized seat belt extender is available from your Toyota dealer free of charge.

Please contact your local Toyota dealer so that the dealer can order the proper required length for the extender. Bring the heaviest coat you expect to wear for proper measurement and selection of length. Additional ordering information is available at your Toyota dealer.

⚠ CAUTION

When using the seat belt extender, observe the following precautions. Failure to follow these instructions could result in less effectiveness of the seat belt restraint system in case of vehicle accident, increasing the chance of personal injury.

- **Never use the seat belt extender if you can fasten the seat belt without it.**
- **Remember that the extender provided for you may not be safe when used on a different vehicle, or for another person or at a different seating position than the one originally intended for.**

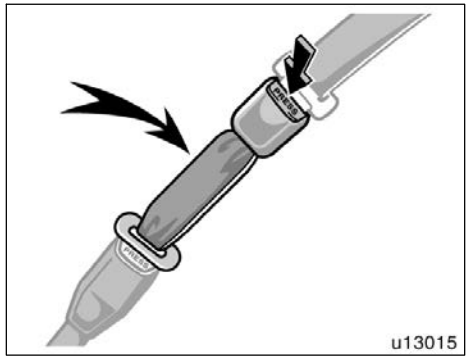

To connect the extender to the seat belt, insert the tab into the seat belt buckle so that the "PRESS" signs on the buckle−release buttons of the extender and the seat belt are both facing outward as shown.

You will hear a click when the tab locks into the buckle.

When releasing the seat belt, press on the buckle−release button on the extender, not on the seat belt. This helps prevent damage to the vehicle interior and extender itself.

When not in use, remove the extender and store in the vehicle for future use.

⚠ CAUTION

- **After inserting the tab, make sure the tab and buckle are locked and that the seat belt extender is not twisted.**
- **Do not insert coins, clips, etc. in the buckle as this may prevent you from properly latching the tab and buckle.**
- **If the seat belt does not function normally, immediately contact your Toyota dealer. Do not use the seat until the seat belt is fixed. It cannot protect an adult occupant or your child from injury. Do not use the seat until the seat belt is fixed. It cannot protect an adult occupant or your child from injury.**

—Seat belt comfort guide

The center shoulder belt comfort guide for the third seat center position will provide added seat belt comfort for children who have outgrown child restraints and for small adults. When the center shoulder belt is inserted through the guide, the comfort guide pulls the belt away from the neck and head of an occupant.

To use the comfort guide, do as follows.

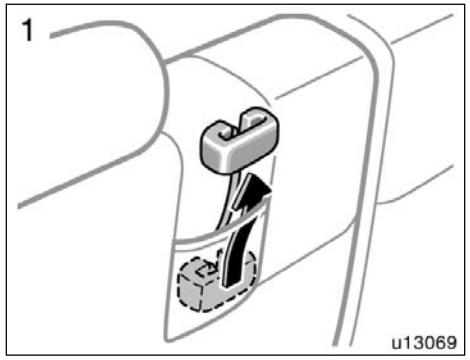

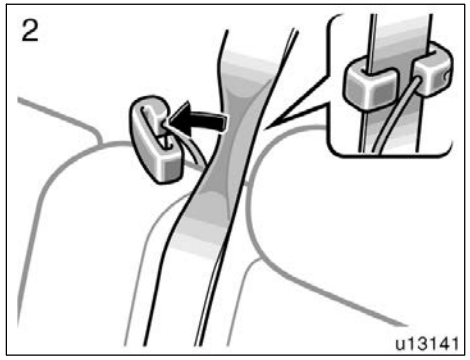

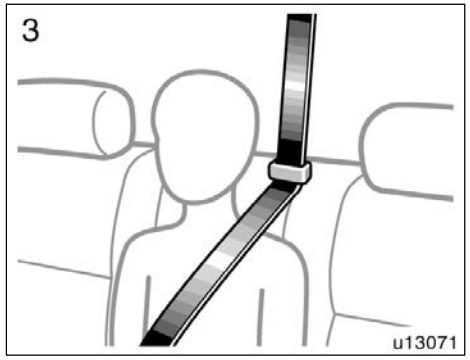

INSTALLING THE COMFORT GUIDE

1. **Pull the comfort guide out of the pocket on the rear of the seatback of the third left seat.**
2. **Pinch the two edges of the shoulder seat belt for the third seat center position with your fingers and slide the belt past the slot of the guide as shown above. At this time, the elastic cord must be behind the seat belt.**

⚠ CAUTION

Make sure the belt is not twisted and that it lies flat. The elastic cord must be behind the belt and the guide must be on the front.

3. **Buckle, position and release the seat belt. (For wearing the seat belt, see "—Front and rear seat belts" on page 56 in this section.) Make sure the shoulder belt crosses the shoulder.**

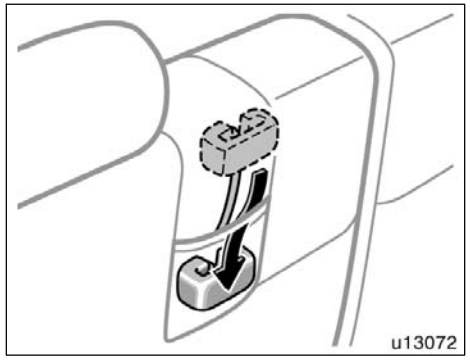

REMOVING AND STORING THE COMFORT GUIDE

Pinch the two edges of the seat belt together so that you can slide them out of the guide. Pull the guide upward and slide the guide with the elastic cord into the pocket on the rear of the seat-back of the third left seat as shown above.

⚠ CAUTION

To reduce the chance of injury in case of an accident or a sudden stop while driving, remove and store the comfort guide in its pocket when it is not in use.

—Front seat belt pretensioners

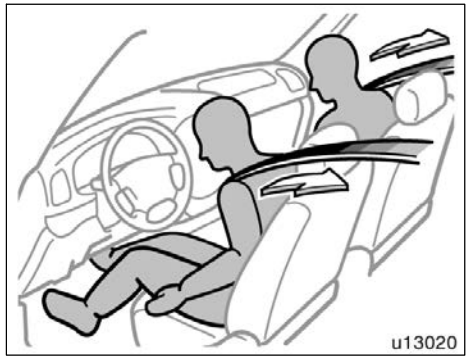

The driver and front passenger's seat belt pretensioners are designed to be activated in response to a severe frontal impact.

When the airbag sensor detects the shock of a severe frontal impact, the front seat belts are quickly drawn back in by the retractors so that the belts snugly restrain the front seat occupants.

The front seat belt pretensioners are activated even with no passenger in the front seat.

Collisions occurring at certain speeds and angles may cause the seat belt pretensioners and SRS airbags not to operate all together.

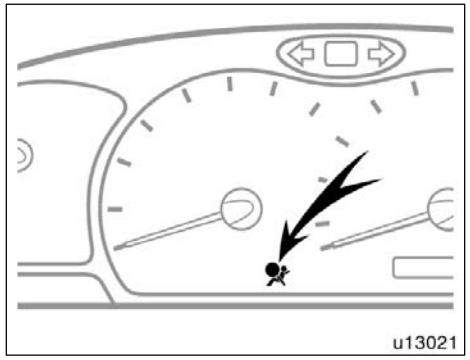

This indicator comes on when the ignition key is turned to the "ON" position. It goes off after about 6 seconds. This means the front seat belt pretensioners are operating properly.

This warning light system monitors the airbag sensor assembly, front airbag sensors, side and curtain shield airbag sensors, front seat belt pretensioner assemblies, inflators, warning light, interconnecting wiring and power sources. (For details, see "Service reminder indicators and warning buzzers" on page 125 in Section 1−5.)

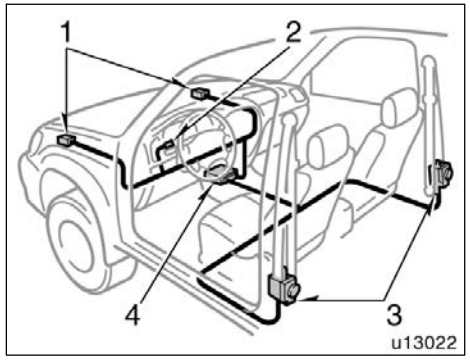

The front seat belt pretensioner system mainly consists of the following components and their locations are shown in the illustration.

1. Front airbag sensors
2. SRS warning light
3. Front seat belt pretensioner assemblies
4. Airbag sensor assembly

The front seat belt pretensioners are controlled by the airbag sensor assembly. The airbag sensor assembly consists of a safing sensor and airbag sensor.

When the front seat belt pretensioners are activated, an operating noise may be heard and a small amount of smoke−like gas may be released. This gas is harmless and does not indicate that a fire is occurring.

Once the front seat belt pretensioners have been activated, the seat belt retractors remain locked.

⚠ CAUTION

Do not modify, remove, strike or open the front seat belt pretensioner assemblies, airbag sensor or surrounding area or wiring. Doing any of these may cause sudden operation of the front seat belt pretensioners or disable the system, which could result in death or serious injury.

Failure to follow these instructions can result in death or serious injuries.

NOTICE

Do not perform any of the following changes without consulting your Toyota dealer. Such changes can interfere with proper operation of the front seat belt pretensioners in some cases.

- ***Installation of electronic devices such as a mobile two−way radio, cassette tape player or compact disc player***
- ***Repairs on or near the front seat belt retractor assemblies***
- ***Modification of the suspension system***
- ***Modification of the front end structure***
- ***Attachment of a grille guard (bull bar, kangaroo bar, etc.), snowplow, winches or any other equipment to the front end***
- ***Repairs made on or near the front fenders, front end structure or console***

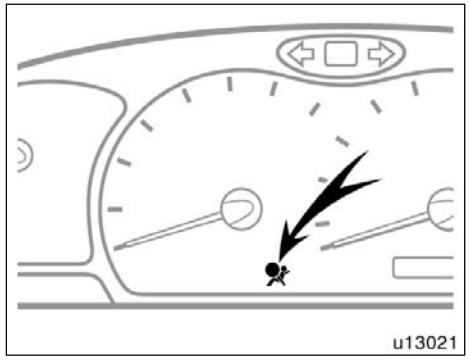

This front seat belt pretensioner system has a service reminder indicator to inform the driver of operating problems. If any of the following conditions occurs, this indicates a malfunction of the airbags or pretensioners. Contact your Toyota dealer as soon as possible to service the vehicle.

- The light does not come on when the ignition key is turned to the “ON” position, or the light remains on.
- The light comes on or flashes while driving.
- If either front seat belt does not retract or cannot be pulled out due to a malfunction or activation of the relevant front seat belt pretensioner.

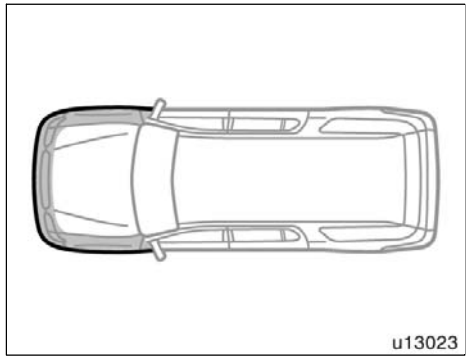

In the following cases, contact your Toyota dealer as soon as possible:

- The front part of the vehicle (shaded in the illustration) was involved in an accident that was not severe enough to cause the front seat belt pretensioners to operate.
- Either front seat belt pretensioner assembly or surrounding area is scratched, cracked, or otherwise damaged.

SRS driver and front passenger airbags

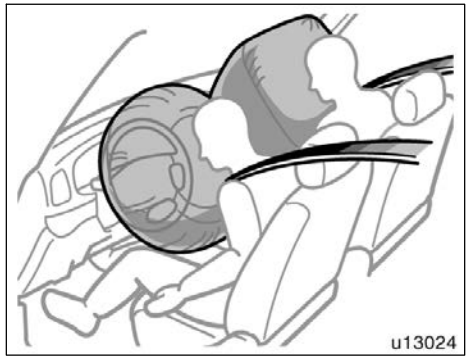

The SRS (Supplemental Restraint System) front airbags are designed to provide further protection for the driver and front passenger in addition to the primary safety protection provided by the seat belts.

In response to a severe frontal impact, the SRS front airbags work together with the seat belts to help reduce injury by inflating. The SRS front airbags help to reduce injuries mainly to the driver's or front passenger's head or chest caused by directly hitting the steering wheel or dashboard. The front passenger airbag is activated even with no passenger in the front seat.

Be sure to wear your seat belt properly.

Your vehicle is equipped with a crash sensing and diagnostic module, which will record the use of the seat belt restraint system by the driver and front passenger when the SRS front airbags are inflated.

⚠ CAUTION

The driver or front passenger who is too close to the steering wheel or dashboard during airbag deployment can be killed or seriously injured. Toyota strongly recommends that:

- **The driver sit as far back as possible from the steering wheel while still maintaining control of the vehicle.**
- **The front passenger sit as far back as possible from the dashboard.**
- **All vehicle occupants be properly restrained using the available seat belts.**

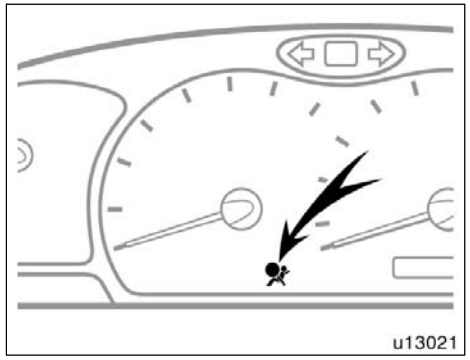

This indicator comes on when the ignition key is turned to the "ON" position. It goes off after about 6 seconds. This means the SRS front airbags are operating properly.

This warning light system monitors the airbag sensor assembly, front airbag sensors, side and curtain shield airbag sensors, front seat belt pretensioner assemblies, inflators, warning light, interconnecting wiring and power sources. (For details, see "Service reminder indicators and warning buzzers" on page 125 in Section 1−5.)

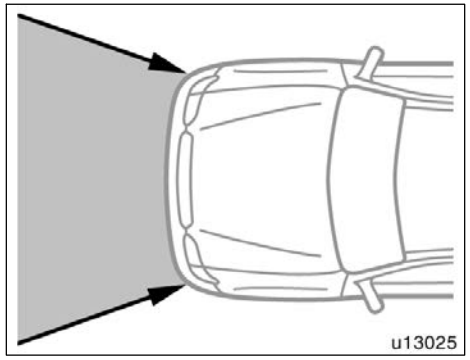

The SRS front airbag system is designed to activate in response to a severe frontal impact within the shaded area between the arrows in the illustration.

The SRS front airbags will deploy if the severity of the impact is above the designed threshold level, comparable to an approximate 25 km/h (15 mph) collision when impacting straight into a fixed barrier that does not move or deform.

If the severity of the impact is below the above threshold level, the SRS front airbags may not deploy.

However, this threshold velocity will be considerably higher if the vehicle strikes an object, such as a parked vehicle or sign pole, which can move or deform on impact, or if it is involved in an underride collision (e.g. a collision in which the nose of the vehicle “underrides”, or goes under, the bed of a truck, etc.).

It is possible that in some collisions at the lower zone of airbag sensor detection and activation the SRS airbags and seat belt pretensioners will not operate all together.

For the safety of all occupants, always wear your seat belts properly.

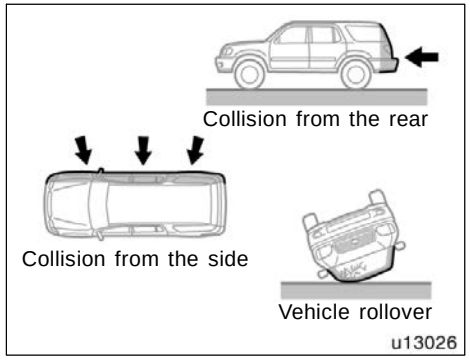

The SRS front airbags are not designed to inflate if the vehicle is involved in a side or rear collision, if it rolls over, or if it is involved in a low−speed frontal collision.

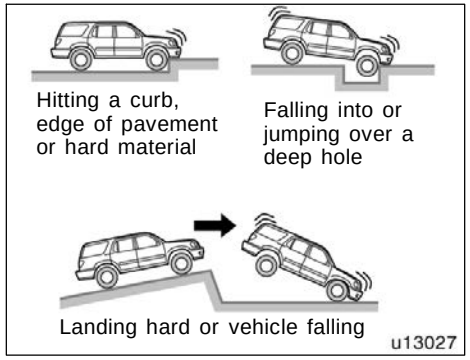

The SRS front airbags may deploy if a serious impact occurs to the underside of your vehicle. Some examples are shown in the illustration.

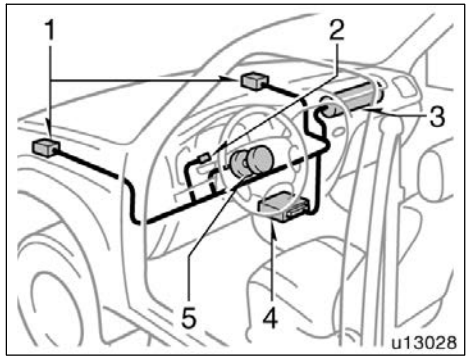

The SRS airbag system consists mainly of the following components, and their locations are shown in the illustration.

1. Front airbag sensors
2. SRS warning light
3. Airbag module for front passenger (airbag and inflator)
4. Airbag sensor assembly
5. Airbag module for driver (airbag and inflator)

The airbag sensor assembly consists of a safing sensor and airbag sensor.

In a severe frontal impact, the sensors detect deceleration and the system triggers the airbag inflators. Then a chemical reaction in the inflators quickly fills the airbags with non−toxic gas to help restrain the forward motion of the occupants.

When the airbags inflate, they produce a fairly loud noise and release some smoke and residue along with non−toxic gas. This does not indicate a fire. This gas is normally harmless; however, for those who have delicate skin, it may cause a minor skin irritation. Be sure to wash off any residue as soon as possible to prevent any potential skin irritation.

Deployment of the airbags happens in a fraction of a second, so the airbags must inflate with considerable force. While the system is designed to reduce serious injuries, it may also cause minor burns or abrasions and swelling.

Parts of the airbag module (steering wheel hub, dashboard) may be hot for several minutes, but the airbags themselves will not be hot. The airbags are designed to inflate only once.

A crash severe enough to inflate the airbags may break the windshield as the vehicle buckles. In vehicles with a passenger airbag the windshield may also be damaged by absorbing some of the force of the inflating airbag.

⚠ CAUTION

- **The SRS airbag system is designed only as a supplement to the primary protection of the driver side and front passenger side seat belt systems. The front seat occupants can be killed or seriously injured by the inflating airbags if they do not wear the available seat belts properly. During sudden braking just before a collision, an unrestrained driver or front passenger can move forward into direct contact with or close proximity to the airbag which may then deploy during the collision. To ensure maximum protection in an accident, the driver and all passengers in the vehicle must wear their seat belts properly. Wearing a seat belt properly during an accident reduces the chances of death or serious injury or being thrown out of the vehicle. For instructions and precautions concerning the seat belt system, see "Seat belts" on page 55 in this section.**

- **Improperly seated and/or restrained infants and children can be killed or seriously injured by the deploying front airbags. An infant or child who is too small to use a seat belt should be properly secured using a child restraint system. Toyota strongly recommends that all infants and children be placed in the rear seat of the vehicle and properly restrained. The rear seat is the safest for infants and children. For instructions concerning the installation of a child restraint system, see "Child restraint" on page 82 in this section.**

à **Never put a rear−facing child restraint system in the front passenger seat because the force of the rapid inflation of the front passenger airbag can cause death or serious injury to the child.**

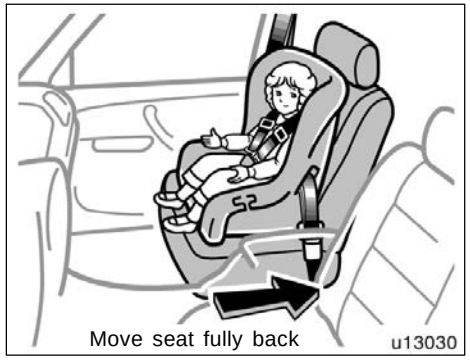

à **A forward−facing child restraint system should be allowed to be put on the front passenger seat only when it is unavoidable. Always move the seat as far back as possible, because the force of the deploying front passenger airbag could cause death or serious injury to the child.**

à **On vehicles with side airbags, do not allow the child to lean against the front door or around the front door even if the child is seated in the child restraint system. It is dangerous if the side airbags inflate, because the impact could cause death or serious injury to the child.**

à **For instructions concerning the installation of a child restraint system, see "Child restraint" on page 82 in this section.**

à Do not sit on the edge of the seat or lean over the dashboard when the vehicle is in use. The front airbags inflate with considerable speed and force; you may be killed or seriously injured. Sit up straight and well back in the seat, and always use your seat belt properly.

à Do not allow a child to stand up, or to kneel on the front passenger seat. The front airbag inflates with considerable speed and force; the child may be killed or seriously injured.

à Do not hold a child on your lap or in your arms. Use a child restraint system in the rear seat. For instructions concerning the installation of a child restraint system, see “Child restraint” on page 82 in this section.

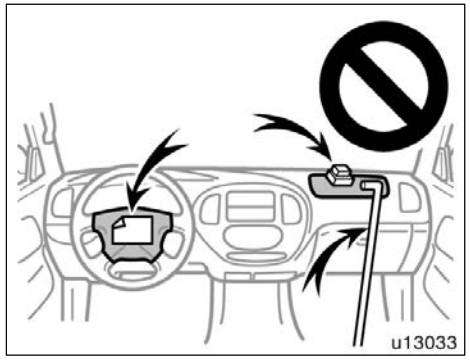

à Do not put objects or your pets on or in front of the dashboard or steering wheel pad that houses the front airbag system. They might restrict inflation or cause death or serious injury as they are projected rearward by the force of deploying airbags. Likewise, the driver and front passenger should not hold things in their arms or on their knees.

- **Do not modify or remove any wiring. Do not modify, remove, strike or open any components such as the steering wheel pad, steering wheel, column cover, front passenger airbag cover, front passenger airbag or airbag sensor assembly. Doing any of these may cause sudden SRS front airbag inflation or disable the system, which could result in death or serious injury.**

Failure to follow these instructions can result in death or serious injury.

NOTICE

Do not perform any of the following changes without consulting your Toyota dealer. Such changes can interfere with proper operation of the SRS front airbag system in some cases.

- ***Installation of electronic devices such as a mobile two−way radio, cassette tape player or compact disc player***
- ***Modification of the suspension system***
- ***Modification of the front end structure***
- ***Attachment of a grille guard (bull bar, kangaroo bar, etc.), snowplow, winches or any other equipment to the front end***
- ***Repairs made on or near the front fenders, front end structure, console, steering column, steering wheel or dashboard near the front passenger airbag***

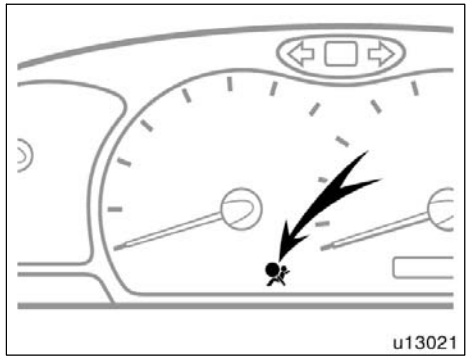

This SRS front airbag system has a service reminder indicator to inform the driver of operating problems. If either of the following conditions occurs, this indicates a malfunction of the airbags. Contact your Toyota dealer as soon as possible to service the vehicle.

- The light does not come on when the ignition key is turned to the “ON” position, or the light remains on.
- The light comes on while driving.

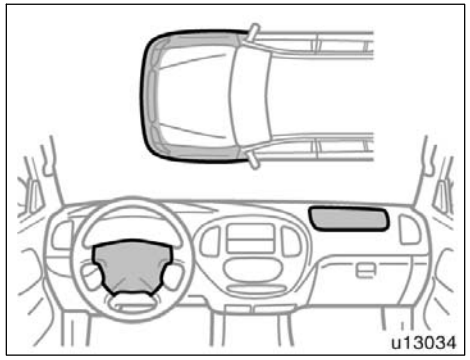

In the following cases, contact your Toyota dealer as soon as possible:

- The SRS front airbags have been inflated.
- The front part of the vehicle (shaded in the illustration) was involved in an accident that was not severe enough to cause the SRS front airbags to inflate.
- The pad section of the steering wheel or front passenger airbag cover (shaded in the illustration) is scratched, cracked, or otherwise damaged.

NOTICE
Do not disconnect the battery cables before contacting your Toyota dealer.

SRS side and curtain shield airbags

The SRS (Supplemental Restraint System) side and curtain shield airbags are designed to provide further protection for the driver and front passenger in addition to the primary safety protection provided by the seat belts.

In response to a severe side impact, the SRS side and curtain shield airbags work together with the seat belts to help reduce injury by inflating. The SRS side airbags help to reduce injuries mainly to the driver's or front passenger's chest and the SRS curtain shield airbags help to reduce injuries mainly to the driver's or front passenger's head. The SRS side and curtain shield airbags on the passenger side are activated even with no passenger in the front seat.

Be sure to wear your seat belt properly.

Your vehicle is equipped with a crash sensing and diagnostic module, which will record the use of the seat belt restraint system by the driver and front passenger when the SRS side and curtain shield airbags are inflated.

⚠ CAUTION

SRS side and curtain shield airbags inflate with considerable force. To avoid potential death or serious injury when they inflate, the driver and front passenger must:

- **Wear their seat belts properly.**
- **Remain properly seated with their back upright and against the seat at all times.**

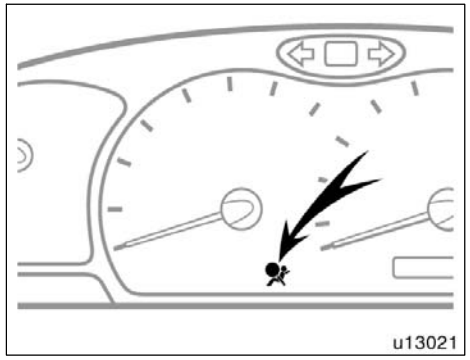

This indicator comes on when the ignition key is turned to the "ON" position. It goes off after about 6 seconds. This means the SRS side and curtain shield airbags are operating properly.

This warning light system monitors the airbag sensor assembly, front airbag sensors, side and curtain shield airbag sensor assemblies, front seat belt pretensioner assemblies, inflators, warning light, interconnecting wiring and power sources. (For details, see "Service reminder indicators and warning buzzers" on page 125 in Section 1−5.)

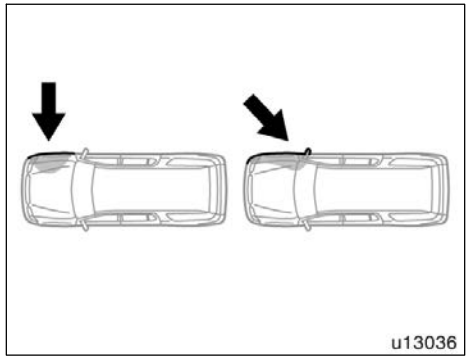

The SRS side and curtain shield airbag system may not activate if the vehicle is subjected to a collision from the side at certain angles, or a collision to the side of the vehicle body other than the passenger compartment as shown in the illustration.

The SRS side and curtain shield airbags are designed to inflate when the passenger compartment area suffers a severe impact from the side.

For the safety of all occupants, always wear your seat belts properly.

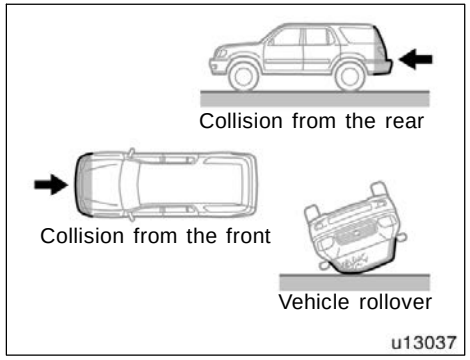

The SRS side and curtain shield airbags are not designed to inflate if the vehicle is involved in a front or rear collision, if it rolls over, or if it is involved in a low−speed side collision.

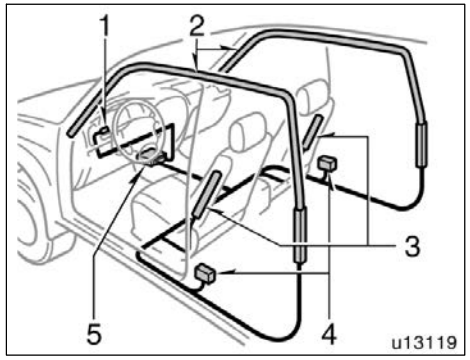

The SRS side and curtain shield airbag system consists mainly of the following components, and their locations are shown in the illustration.

1. SRS warning light
2. Curtain shield airbag modules (airbag and inflator)
3. Side airbag modules (airbag and inflator)
4. Side and curtain shield airbag sensors
5. Airbag sensor assembly

The SRS side and curtain shield airbag system is controlled by the airbag sensor assembly. The airbag sensor assembly consists of a safing sensor and airbag sensor.

In a severe side impact, the side and curtain shield airbag sensor triggers the side and curtain shield airbag inflators. Then a chemical reaction in the inflators quickly fills the airbags with non−toxic gas to help restrain the lateral motion of the occupants.

When the airbags inflate, they produce a fairly loud noise and release some smoke and residue along with non−toxic gas. This does not indicate a fire. This gas is normally harmless; however, for those who have delicate skin, it may cause a minor skin irritation. Be sure to wash off any residue as soon as possible to prevent any potential skin irritation.

Deployment of the airbags happens in a fraction of a second, so the airbags must inflate with considerable force. While the system is designed to reduce serious injuries, it may also cause minor burns or abrasions and swelling.

Front seats as well as parts of the front pillar and roof side may be hot for several minutes, but the airbags themselves will not be hot. The airbags are designed to inflate only once.

⚠ CAUTION

- **The SRS side and curtain shield airbag system is designed only as a supplement to the primary protection of the driver side and front passenger side seat belt systems. To ensure maximum protection in an accident, the driver and all passengers in the vehicle must wear their seat belts properly. Wearing a seat belt properly during an accident reduces the chances of death or serious injury or being thrown out of the vehicle. For instructions and precautions concerning the seat belt system, see “Seat belts” on page 55 in this section.**

à **Improperly seated and/or restrained infants and children can be killed or seriously injured by the deploying airbags. An infant or child who is too small to use a seat belt should be properly secured using a child restraint system. Toyota strongly recommends that all infants and children be placed in the rear seat of the vehicle and properly restrained. The rear seat is the safest for infants and children. For instructions concerning the installation of a child restraint system, see "Child restraint" on page 82 in this section.**

à **Do not allow a child to lean his/her head or any part of his/her body against the front door or the area of the seat, front pillar or roof side from which the side and curtain shield airbags deploy even if he/she is seated in the child restraint system. It is dangerous if the side and curtain shield airbags inflate, and the impact could cause death or serious injury to the child. For instructions concerning the installation of a child restraint system, see "Child restraint" on page 82 in this section.**

à **Do not allow a child to kneel on the front passenger seat facing the front passenger's side door when the vehicle is in use. The side and curtain shield airbags inflate with considerable speed and impact; the child may be killed or seriously injured.**

- **Do not lean against the front door when the vehicle is in use. The side and curtain shield airbags inflate with considerable speed and force; you may be killed or seriously injured.**
- **Do not apply excessive weight to the outer side of the front seats with a side airbag, and to the front pillar and roof side portion with a curtain shield airbag.**

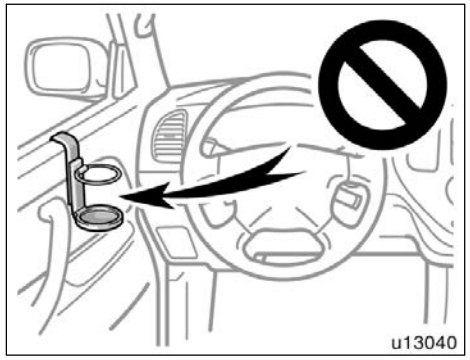

- **Do not attach a cup holder or any other device or object on or around the door. When the side airbag inflates, the cup holder or any other device or object will be thrown with great force or the side airbag may not activate correctly, resulting in death or serious injury. Likewise, the driver and front passenger should not hold things in their arms or on their knees.**

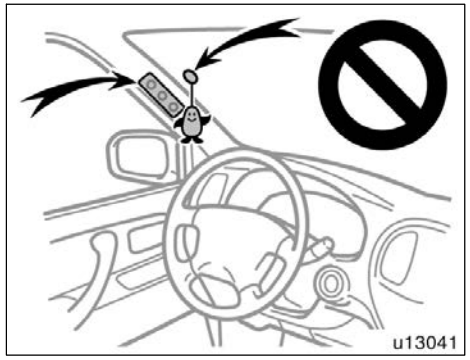

- **Do not attach a microphone or any other device or object around the part where the curtain shield airbag activates such as on the windshield glass, side door glass and front and side pillar. When the curtain shield airbag inflates, the microphone or other device or object will be thrown with great force or the curtain shield airbag may not activate correctly, resulting in death or serious injury.**

- **Do not place any seat accessories in the side airbag inflation area. Such accessories may prevent the side airbags from activating correctly, causing death or serious injury.**
- **Do not modify or replace the seats or upholstery of the front seats with the side airbags. Such changes may disable the system or cause the side airbags to inflate accidentally, resulting in death or serious injury. Consult your Toyota dealer if you insist on modifications of this kind.**
- **Do not disassemble or repair the first and third pillars and roof side containing the curtain shield airbags. Such changes may disable the system or cause the curtain shield airbags to inflate accidentally, resulting in death or serious injury. Consult your Toyota dealer if you consider modifications of this kind.**

Failure to follow these instructions can result in death or serious injury.

NOTICE

Do not perform any of the following changes without consulting your Toyota dealer. Such changes can interfere with proper operation of the SRS side and curtain shield airbag system in some cases.

- ***Installation of electronic devices such as a mobile two−way radio, cassette tape player or compact disc player***
- ***Modification of the suspension system***
- ***Modification of the side structure of the passenger compartment***
- ***Repairs made on or near the console***

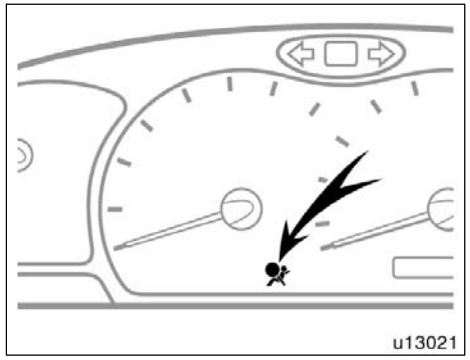

This SRS side and curtain shield airbag system has a service reminder indicator to inform the driver of operating problems. If either of the following conditions occurs, this indicates a malfunction of the airbags. Contact your Toyota dealer as soon as possible to service the vehicle.

- The light does not come on when the ignition key is turned to the “ON” position, or the light remains on.
- The light comes on or flashes while driving.

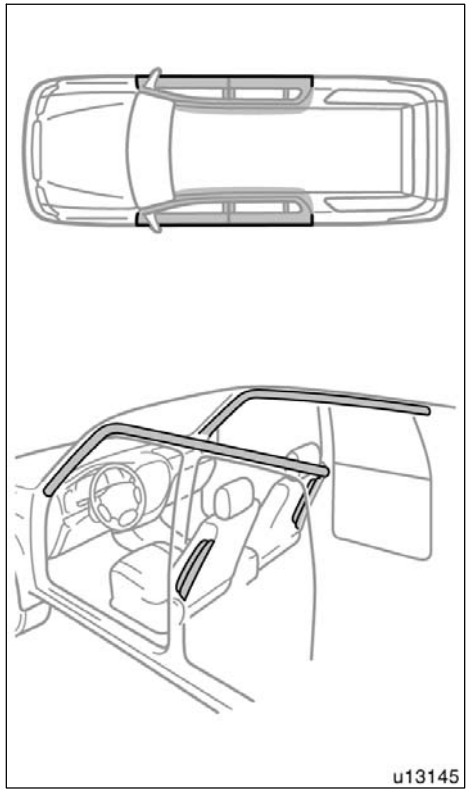

In the following cases, contact your Toyota dealer as soon as possible:

- The SRS side and curtain shield airbags have been inflated.
- The portion of the doors (shaded in the illustration) was involved in an accident that was not severe enough to cause the SRS side and curtain shield airbags to inflate.
- The surface of the seats with the side airbag (shaded in the illustration) is scratched, cracked, or otherwise damaged.
- The portion of the front pillars and headliner containing the curtain shield airbags inside (shaded in the illustration) is scratched, cracked, or otherwise damaged.

NOTICE

Do not disconnect the battery cables before contacting your Toyota dealer.

Child restraint— —Child restraint precautions

Toyota strongly urges the use of child restraint systems for children small enough to use them.

The laws of all fifty states in the U.S.A. and Canada now require the use of a child restraint system.

Your vehicle conforms to SAE J1819.

If a child is too large for a child restraint system, the child should sit in the rear seat and must be restrained using the vehicle's seat belt. See "Seat belts" on page 55 in this section for details.

CAUTION

- **For effective protection in automobile accidents and sudden stops, a child must be properly restrained, using a seat belt or child restraint system depending on the age and size of the child. Holding a child in your arms is not a substitute for a child restraint system. In an accident, the child can be crushed against the windshield, or between you and the vehicle's interior.**

- **Toyota strongly urges use of a proper child restraint system which conforms to the size of the child, and is put on the rear seat. According to accident statistics, the child is safer when properly restrained in the rear seat than in the front seat.**
- **Never put a rear−facing child restraint system on the front seat. In the event of an accident, the force of the rapid inflation of the airbag can cause death or serious injury if a rear−facing child restraint system is put on the front seat.**
- **Unless it is unavoidable, do not put a forward−facing child restraint system on the front seat.**
- **A forward−facing child restraint system should be allowed to be put on the front seat only when it is unavoidable. Always move the seat as far back as possible, because the force of the deploying airbag could cause death or serious injury to the child.**

- **On vehicles with side airbags, do not allow the child to lean against the front door or around the front door even if the child is seated in the child restraint system. It is dangerous if the side airbags inflate, because the impact could cause death or serious injury to the child.**
- **Make sure that you have complied with all installation instructions provided by the child restraint manufacturer and that the system is properly secured.**

—Child restraint system

A child restraint system for a small child or baby must itself be properly restrained on the seat with the lap portion of the lap/shoulder belt. You must carefully consult the manufacturer's instructions which accompany the child restraint system.

To provide proper restraint, use a child restraint system following the manufacturer's instructions about the appropriate age and size of the child for the child restraint system.

Install the child restraint system correctly following the instructions provided by its manufacturer of the system. General directions are also provided under the following illustrations.

The child restraint system should be installed on the rear seat. According to accident statistics, the child is safer when properly restrained in the rear seat than in the front seat.

⚠ CAUTION

- **Never put a rear−facing child restraint system on the front seat. In the event of an accident, the force of the rapid inflation of the airbag can cause death or serious injury if a rear−facing child restraint system is put on the front seat.**
- **Unless it is unavoidable, do not put a forward−facing child restraint system on the front seat.**
- **A forward−facing child restraint system should be allowed to be put on the front seat only when it is unavoidable. Always move the seat as far back as possible, because the force of the deploying airbag could cause death or serious injury to the child.**
- **On vehicles with side airbags, do not allow the child to lean against the front door or around the front door even if the child is seated in the child restraint system. It is dangerous if the side airbags inflate, because the impact could cause death or serious injury to the child.**

- **After installing the child restraint system, make sure it is secured in place following the manufacturer's instructions. If it is not restrained securely, it may cause death or serious injury to the child in the event of a sudden stop or accident.**

When not using the child restraint system, keep it secured with the seat belt or place it somewhere other than the passenger compartment. This will prevent it from injuring passengers in the event of a sudden stop or accident.

—Types of child restraint system

Child restraint systems are classified into the following 3 types depending on the child's age and size.

(A) Infant seat
(B) Convertible seat
(C) Booster seat

Install the child restraint system following the instructions provided by its manufacturer.

Your vehicle has anchor brackets for securing the top strap of a child restraint system.

For instructions about how to use the anchor bracket, see "—Using a top strap" on pages 95 and 97 in this section.

The child restraint lower anchorages approved for your vehicle may also be used. See "—Installation with child restraint lower anchorages" on page 99 in this section.

(A) Infant seat

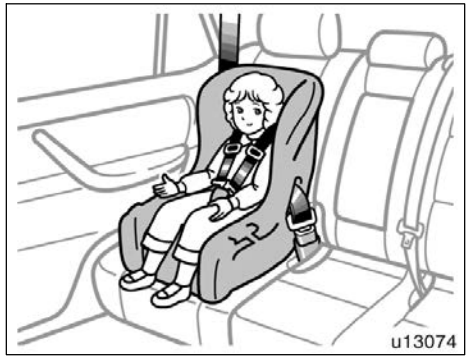

(B) Convertible seat

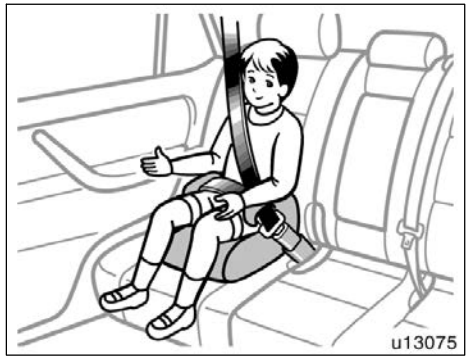

(C) Booster seat

—Installation with seat belt

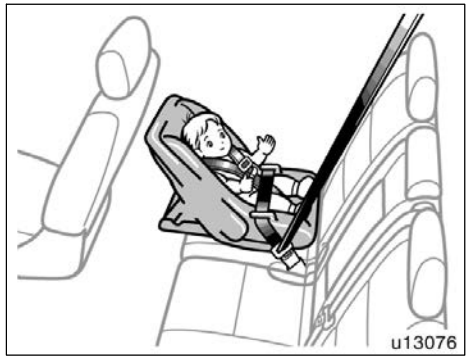

(A) INFANT SEAT INSTALLATION

An infant seat is used in rear−facing position only.

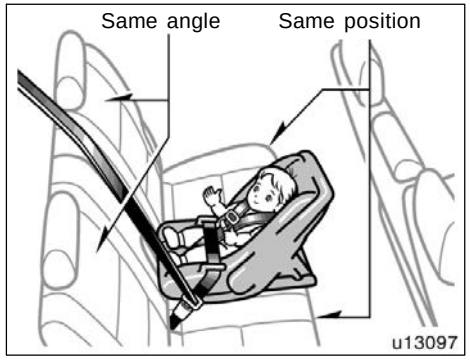

⚠ CAUTION

- **Never put a rear−facing child restraint system in the front passenger seat because the force of the rapid inflation of the front passenger airbag can cause death or serious injury to the child.**

- **Do not put a rear−facing child restraint system in the second (or third) seat if it interferes with the lock mechanism of the front (or second) seats. This can cause death or serious injury to the child and passengers in front (or second) seats in case of sudden braking or a collision.**
- **If your driving position is not satisfactory, do not install the child restraint system on the second left seat.**

- **When installing a child restraint system in the third seat center position, adjust both seat cushions to the same position and align both seatbacks at the same angle. Otherwise, the child restraint system cannot be securely restrained and this may cause death or serious injuries in a collision.**

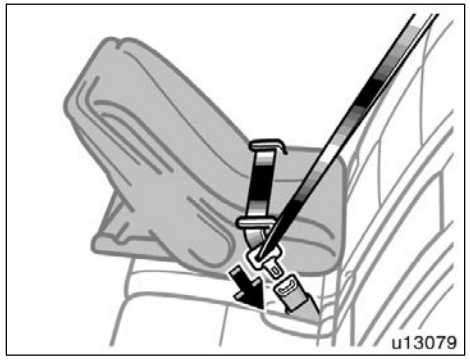

1. Run the lap and shoulder belt through or around the infant seat following the instructions provided by its manufacturer and insert the tab into the buckle taking care not to twist the belt. Keep the lap portion of the belt tight.

⚠ CAUTION

- **After inserting the tab, make sure the tab and buckle are locked and that the lap and shoulder portions of the belt are not twisted.**
- **Do not insert coins, clips, etc. in the buckle as this may prevent you from properly latching the tab and buckle.**
- **If the seat belt does not function normally, it cannot protect your child from injury. Contact your Toyota dealer immediately. Do not use the seat until the seat belt is fixed.**

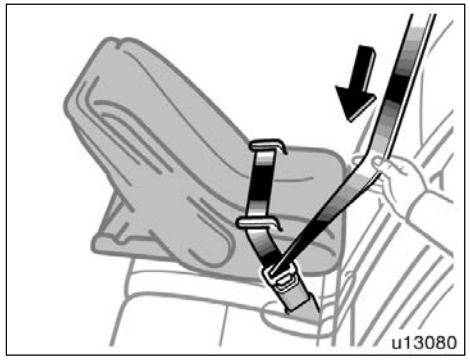

2. Fully extend the shoulder belt to put it in the lock mode. When the belt is then retracted even slightly, it cannot be extended.

To hold the infant seat securely, make sure the belt is in the lock mode before letting the belt retract.

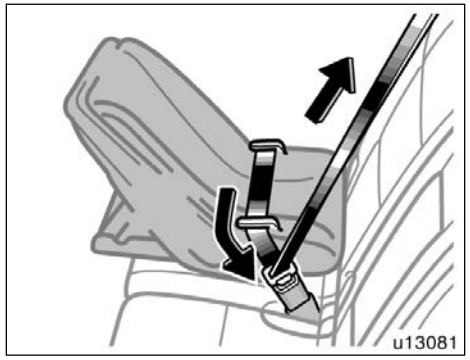

3. While pressing the infant seat firmly against the seat cushion and seatback, let the shoulder belt retract as far as it will go to hold the infant seat securely.

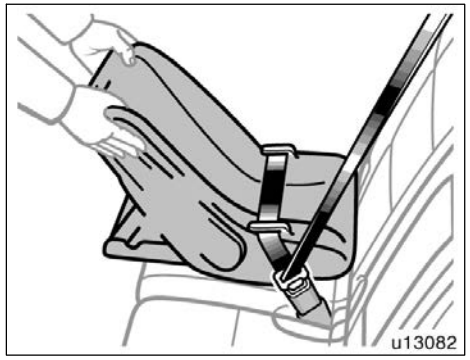

CAUTION

Push and pull the child restraint system in different directions to be sure it is secure. Follow all the installation instructions provided by its manufacturer.

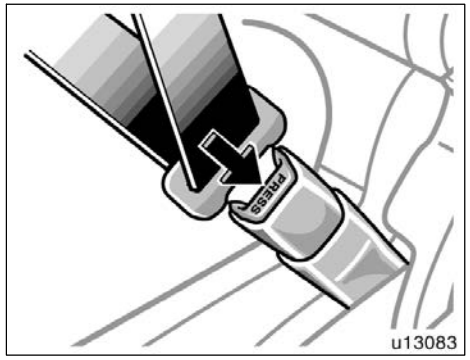

4. To remove the infant seat, press the buckle−release button and allow the belt to retract completely. The belt will move freely again and be ready to work for an adult or older child passenger.

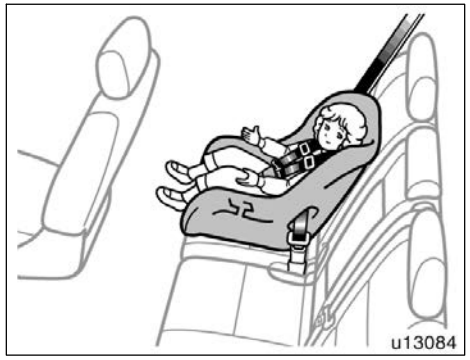

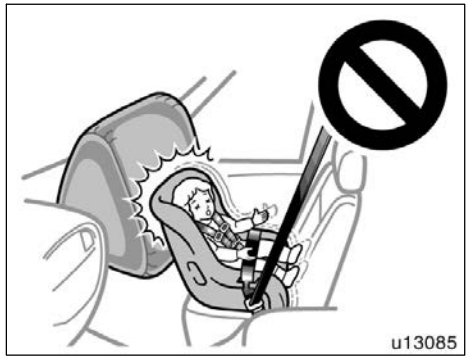

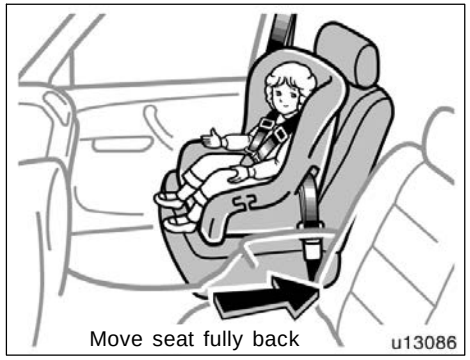

(B) CONVERTIBLE SEAT INSTALLATION

A convertible seat is used in forward−facing or rear−facing position depending on the child's age and size. When installing, follow the manufacturer's instructions about the applicable child's age and size as well as directions for installing the child restraint system.

⚠ CAUTION

- **Never put a rear−facing child restraint system on the front passenger seat because the force of the rapid inflation of the front passenger airbag can cause death or serious injury to the child.**
- **A forward−facing child restraint system should be allowed to be put on the front passenger seat only when it is unavoidable. Always move the seat as far back as possible, because the force of the deploying front passenger airbag could cause death or serious injury to the child.**
- **On vehicles with side airbags, do not allow the child to lean against the front door or around the front door even if the child is seated in the child restraint system. It is dangerous if the side airbag inflates, and the impact could cause death or serious injury to the child.**

- **Do not put a rear−facing child restraint system in the second (or third) seat if it interferes with the lock mechanism of the front (or second) seats. This can cause death or serious injury to the child and front passenger in case of sudden braking or a collision.**
- **If your driving position is not satisfactory, do not install the child restraint system on the second left seat.**

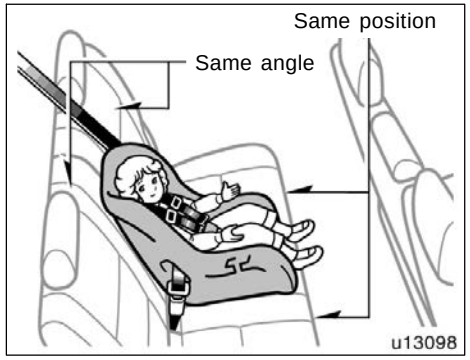

- **When installing a child restraint system in the third seat center position, adjust both seat cushions to the same position and align both seatbacks at the same angle. Otherwise, the child restraint system cannot be securely restrained and this may cause death or serious injuries in a collision.**

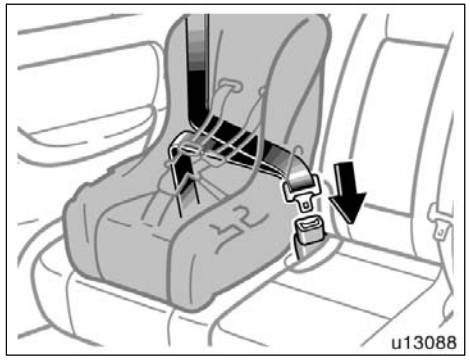

1. Run the lap and shoulder belt through or around the convertible seat following the instructions provided by its manufacturer and insert the tab into the buckle taking care not to twist the belt. Keep the lap portion of the belt tight.

⚠ CAUTION

- **After inserting the tab, make sure the tab and buckle are locked and that the lap and shoulder portions of the belt are not twisted.**
- **Do not insert coins, clips, etc. in the buckle as this may prevent you from properly latching the tab and buckle.**
- **If the seat belt does not function normally, it cannot protect your child from injury. Contact your Toyota dealer immediately. Do not use the seat until the seat belt is fixed.**

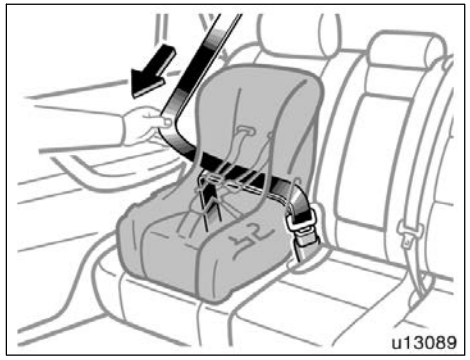

2. Fully extend the shoulder belt to put it in the lock mode. When the belt is then retracted slightly, it cannot be extended.

To hold the convertible seat securely, make sure the belt is in the lock mode before letting the belt retract.

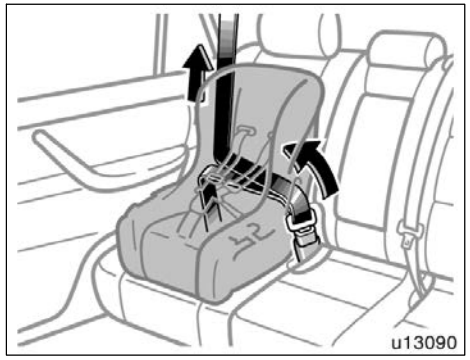

3. While pressing the convertible seat firmly against the seat cushion and seatback, let the shoulder belt retract as far as it will go to hold the convertible seat securely.

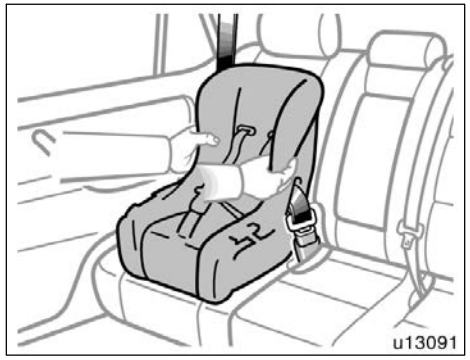

⚠ CAUTION

Push and pull the child restraint system in different directions to be sure it is secure. Follow all the installation instructions provided by its manufacturer.

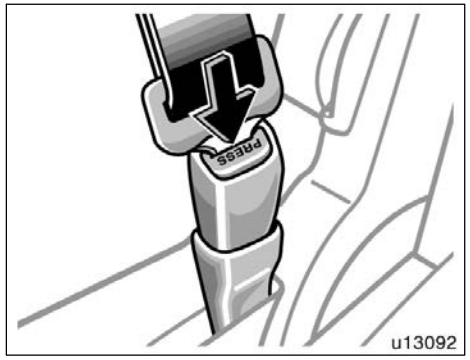

4. To remove the convertible seat, press the buckle−release button and allow the belt to retract completely. The belt will move freely again and be ready to work for an adult or older child passenger.

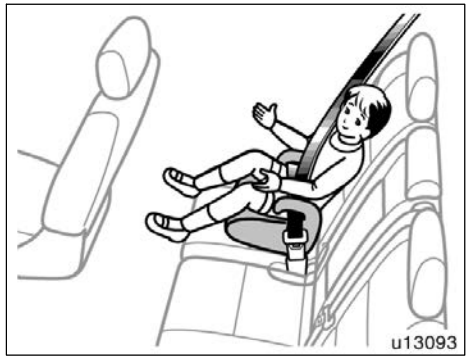

(C) BOOSTER SEAT INSTALLATION

A booster seat is used in forward−facing position only.

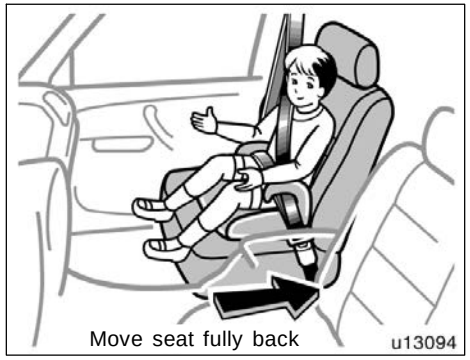

⚠ CAUTION

- **A forward−facing child restraint system should be allowed to be put on the front passenger seat only when it is unavoidable. Always move the seat as far back as possible, because the force of the deploying front passenger airbag could cause death or serious injury to the child.**
- **On vehicles with side airbags, do not allow the child to lean against the front door or around the front door even if the child is seated in the child restraint system. It is dangerous if the side airbag inflates, and the impact could cause death or serious injury to the child.**

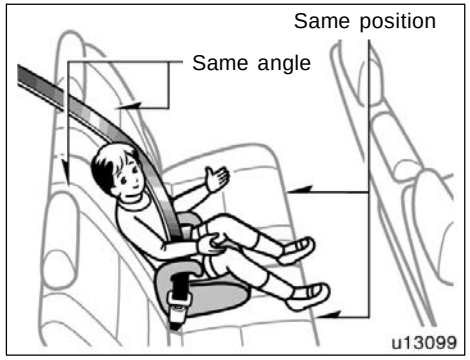

- **When installing a child restraint system in the third seat center position, adjust both seat cushions to the same position and align both seatbacks at the same angle. Otherwise, the child restraint system cannot be securely restrained and this may cause death or serious injuries in a collision.**

1. Sit the child on a booster seat. Run the lap and shoulder belt through or around the booster seat and child following the instructions provided by its manufacturer and insert the tab into the buckle taking care not to twist the belt.

Make sure the shoulder belt is correctly across the child's shoulder and that the lap belt is positioned as low as possible on child's hips. See "Seat belts" on page 55 for details.

⚠ CAUTION

- **Always make sure the shoulder belt is positioned across the center of child's shoulder. The belt should be kept away from child's neck, but not falling off child's shoulder. Failure to do so could reduce the amount of protection in an accident and cause serious injuries in a collision.**
- **Both high−positioned lap belts and loose−fitting belts could cause serious injuries due to sliding under the lap belt during a collision or other unintended result. Keep the lap belt positioned as low on a child's hips as possible.**
- **For child's safety, do not place the shoulder belt under child's arm.**
- **After inserting the tab, make sure the tab and buckle are locked and that the lap and shoulder portions of the belt are not twisted.**
- **Do not insert coins, clips, etc. in the buckle as this may prevent your child from properly latching the tab and buckle.**
- **If the seat belt does not function normally, it cannot protect your child from injury. Contact your Toyota dealer immediately. Do not use the seat until the seat belt is fixed.**

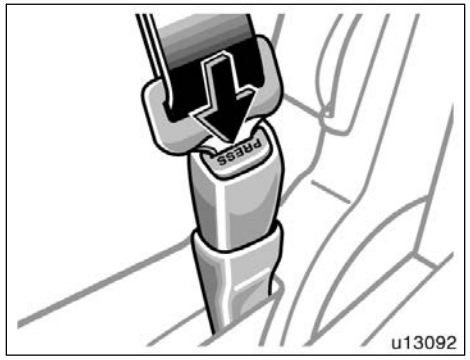

2. To remove the child restraint system, press the buckle−release button and allow the belt to retract.

—Using a top strap (for second seats)

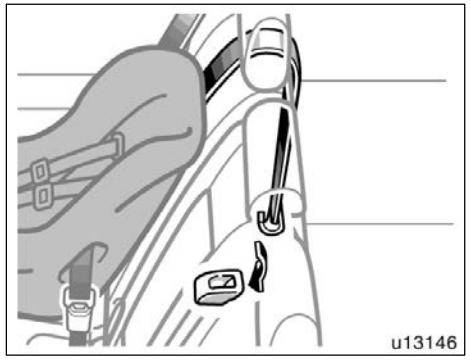

Follow the procedure below for a child restraint system that requires the use of a top strap.

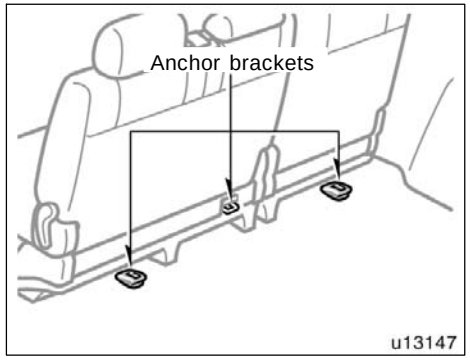

Use one anchorage on the rear of second seats and two anchorages on the floor as shown above to attach the top strap.

Anchors are installed for each second seating position.

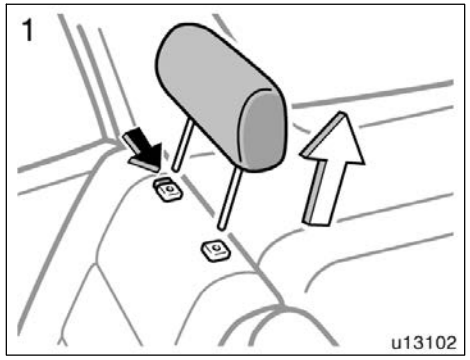

TO USE THE ANCHORAGES:

1. **Remove the head restraint.**

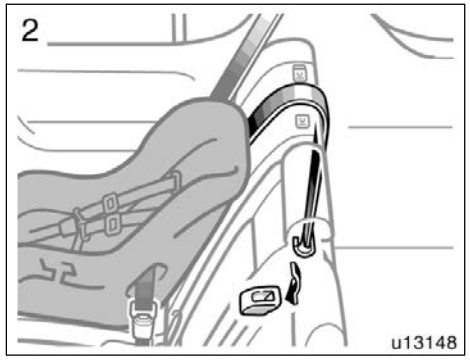

Outside position

Center position

2. **Fix the child restraint system with the seat belt.**

   Latch the hook onto the anchorages and tighten the top strap.

For instructions to install the child restraint system, see “Child restraint” on page 82 in this section.

⚠ CAUTION

Make sure the top strap is securely latched, and check that the child restraint system is secure by pushing and pulling it in different directions. Follow all the installation instructions provided by its manufacturer.

—Using a top strap (for third seats)

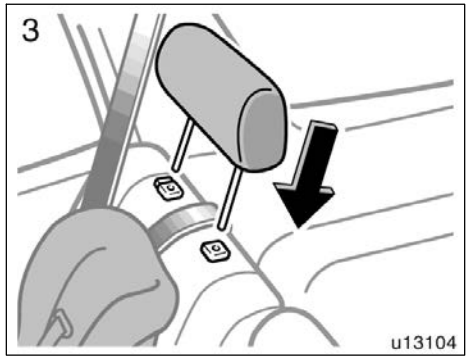

3. Replace the head restraint.

Follow the procedure below for a child restraint system that requires the use of a top strap.

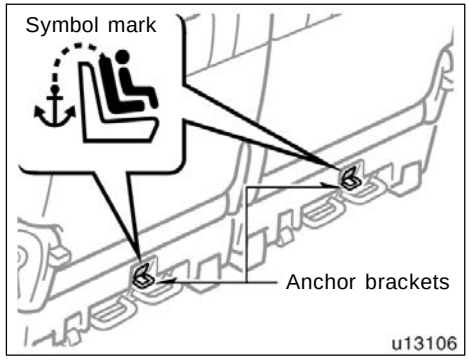

Use the anchorage on the rear of the seatback of each third seat to attach the top strap.

Anchorages are installed for third outside seating positions.

This symbol indicates the locations of user ready anchorage.

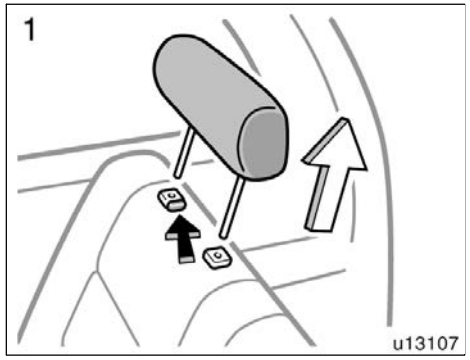

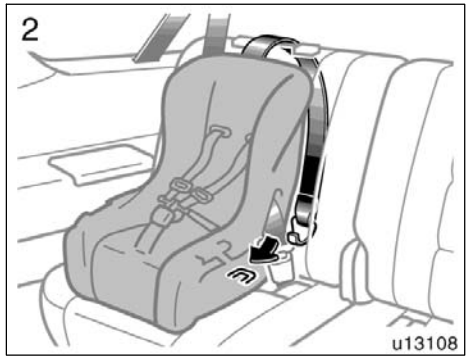

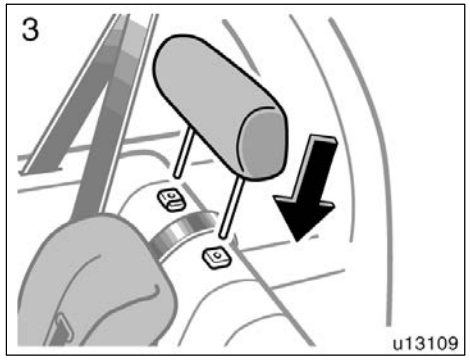

TO USE THE ANCHORAGES:

1. **Remove the head restraint.**
2. **Fix the child restraint system with the seat belt.**

   Latch the hook onto the anchor bracket and tighten the top strap.

For instructions to install the child restraint system, see “Child restraint” on page 82 in this section.

⚠ CAUTION

Make sure the top strap is securely latched, and check that the child restraint system is secure by pushing and pulling it in different directions.

3. **Replace the head restraint.**

—Installation with child restraint lower anchorages (for second seats)

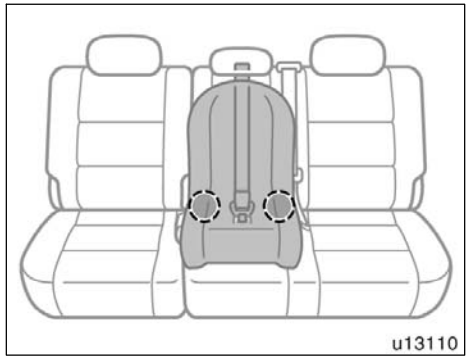

Center

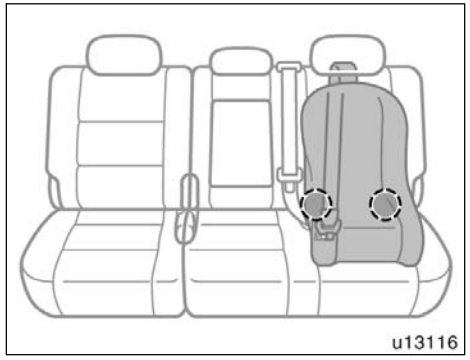

Left

The lower anchorages for the child restraint system interfaced with the FMVSS225 specification are installed in the center and left positions of the second seats.

The anchorages are installed in the clearance between the seat cushion and seatback for center and left positions of second seats.

Child restraint system interfaced with the FMVSS225 specification can be fixed with these anchorages. In this case, it is not necessary to fix the child restraint system with a seat belt on the vehicle.

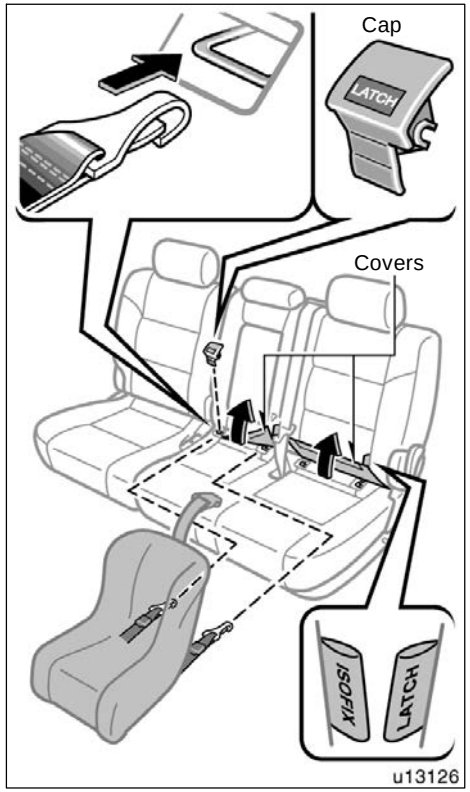

Type A

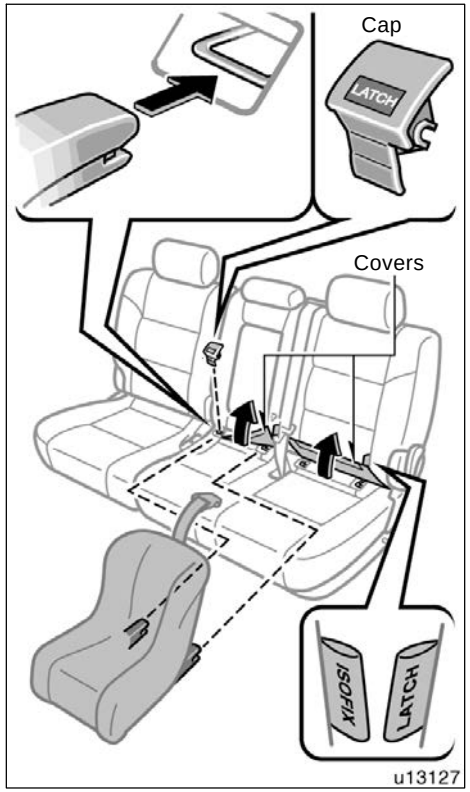

Type B

CHILD RESTRAINT SYSTEM INSTALLATION

Type A—

1. **Turn up the covers for left lower anchorage on the center position of the seats anchorages on the left side position of the seats, and remove the cap for the right lower anchorage of the center position of the seat as shown in the illustration.**
2. **Widen the clearance between the seat cushion and seatback a little and confirm the position of the lower anchorages below the tag and cap in the seat cushion.**
3. **Latch the hooks of lower straps onto the anchorages and tighten the lower straps.**

Type B—

1. **Turn up the covers for left lower anchorage on the center position of the seats anchorages on the left side of the position of the seat, and remove the cap for the right lower anchorage of the center position of the seat as shown in the illustration.**
2. **Widen the clearance between the seat cushion and seatback a little and confirm the position of the lower anchorages below the tag in the seat cushion.**
3. **Latch the buckles onto the anchorages.**

If your child restraint system has a top strap, it should be anchored. (For the installation of the top strap, see “—Using a top strap” on page 95 in this section.)

For the installation details, refer to the instruction manual equipped with each product.

—Installation with child restraint lower anchorages (for third seats)

⚠ CAUTION

- **When using the lower anchorages for the child restraint system, be sure that there are no irregular objects around the anchorages or that the seat belt is not caught.**
- **Push and pull the child restraint system in different directions to be sure it is secure. Follow all the installation instructions provided by its manufacturer.**
- **After securing the child restraint system, never recline the seat.**
- **Do not put a child restraint system on the rear seat if it interferes with the lock mechanism of the front seats. This can cause severe injury to the child and front passenger in case of sudden braking or a collision.**

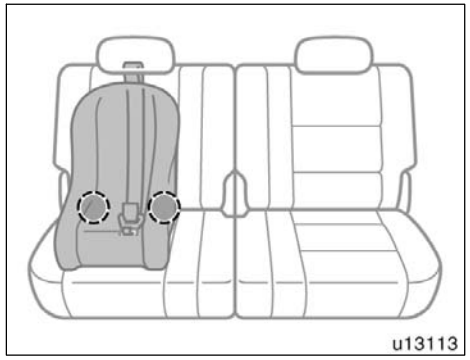

The lower anchorages for the child restraint system interfaced with the FMVSS225 specification are installed in the right side position of the third seats.

The anchorages are installed in the clearance between the seat cushion and seatback for right side position of the third seats.

Child restraint system interfaced with the FMVSS225 specification can be fixed with these anchorages. In this case, it is not necessary to fix the child restraint system with a seat belt on the vehicle.

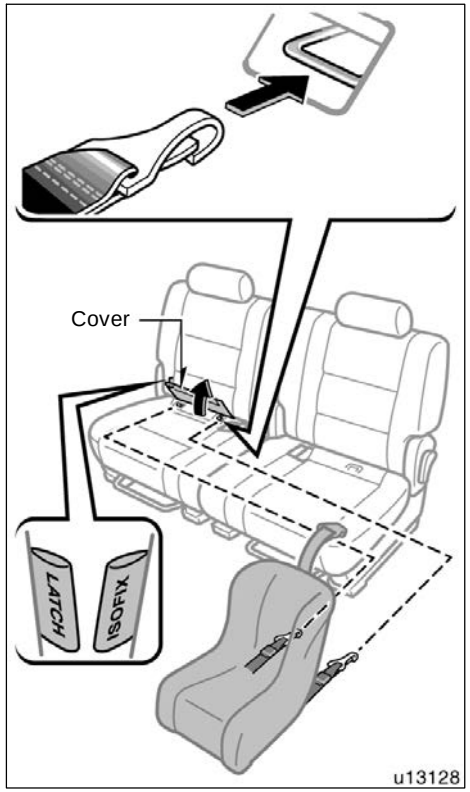

Type A

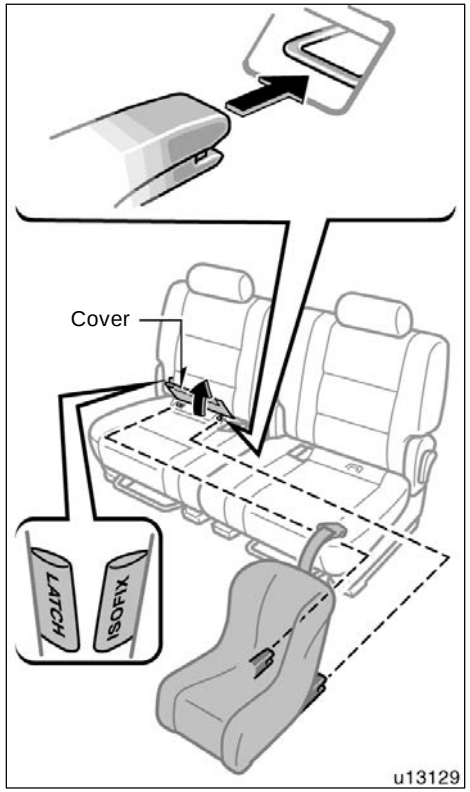

Type B

CHILD RESTRAINT SYSTEM INSTALLATION

Type A—

1. **Turn up the cover for lower anchorages of the right side position.**
2. **Widen the clearance between the seat cushion and seatback a little and confirm the position of the lower anchorages below the tag in the seat cushion.**
3. **Latch the hooks of lower straps onto the anchorages and tighten the lower straps.**

Type B—

1. **Turn up the cover for lower anchorages of the right side position.**
2. **Widen the clearance between the seat cushion and seatback a little and confirm the position of the lower anchorages below the tag in the seat cushion.**
3. **Latch the buckles onto the anchorages.**

If your child restraint system has a top strap, it should be anchored. (For the installation of the top strap, see "—Using a top strap" on page 97 in this section.)

For the installation details, refer to the instruction manual equipped with each product.

⚠ CAUTION

- **When using the lower anchorages for the child restraint system, be sure that there are no irregular objects around the anchorages or that the seat belt is not caught.**
- **Push and pull the child restraint system in different directions to be sure it is secure. Follow all the installation instructions provided by its manufacturer.**
- **When using lower anchorages for a child restraint system on the third seats, ensure that the seat is moved to the rear−most position, with the seatback close to the child restraint system.**
- **After securing the child restraint system, never slide or recline the seat.**

à **Do not put a child restraint system on the rear seat if it interferes with the lock mechanism of the front seats. This can cause severe injury to the child and front passenger in case of sudden braking or a collision.**

Tilt steering wheel

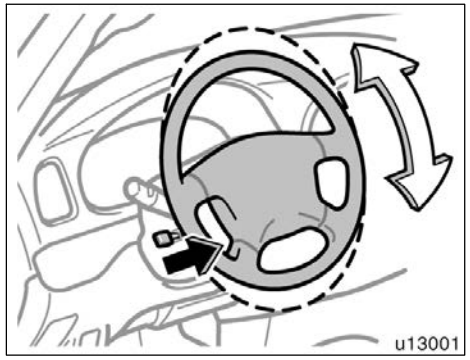

To change the steering wheel angle, hold the steering wheel, pull the lock release lever toward you, tilt the steering wheel to the desired angle and release the lever.

When the steering wheel is in a low position, it will spring up as you release the lock release lever.

⚠ CAUTION

à **Do not adjust the steering wheel while the vehicle is moving. It may cause the driver to mishandle the vehicle and an accident may occur resulting in death or serious injuries.**

à **After adjusting the steering wheel, try moving it up and down to make sure it is locked in position.**

Outside rear view mirrors—

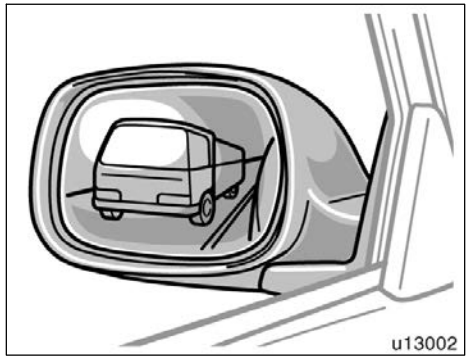

Adjust the mirror so that you can see the side of your vehicle in the mirror.

Be careful when judging the size or distance of any object seen in the outside rear view mirror on the passenger's side. It is a convex mirror with a curved surface. Any object seen in a convex mirror will look smaller and farther away than when seen in a flat mirror.

On some models, when you push the back window defogger switch, the heater panels in the outside rear view mirrors will quickly clear the surface. To turn on the back window defogger, see "Back window and outside rear view mirror defoggers" on page 119 in Section 1−4.

⚠ CAUTION

- **Do not adjust the mirror while the vehicle is moving. It may cause the driver to mishandle the vehicle and an accident may occur resulting in personal death or injuries.**
- **On some models, since the mirror surfaces can get hot, keep your hands off them when the defogger switch is on.**

—Power rear view mirror control

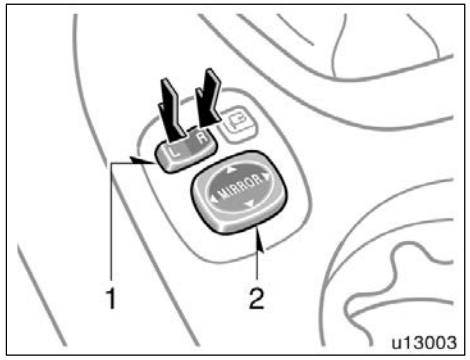

Type A

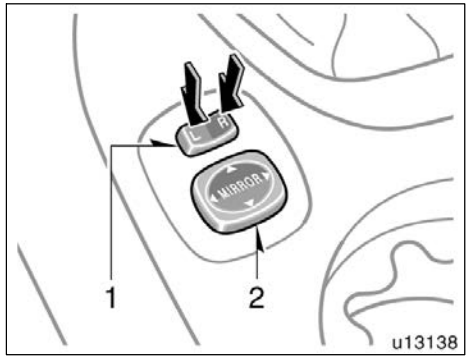

Type B

To adjust a mirror, use the switches.

1. Master switch—To select the mirror to be adjusted
   Push the “L” (left) or “R” (right) switch.
2. Control switch—To move the mirror
   Push the switch in the desired direction.

Mirror can be adjusted when key is in the “ACC” or “ON” position.

NOTICE
If ice should jam the mirror, do not operate the control or scrape the mirror face. Use a spray de−icer to free the mirror.

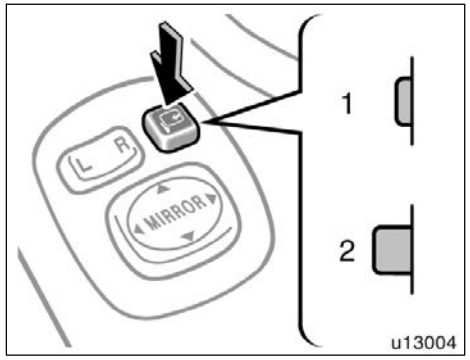

FOLDING MIRRORS (type A only)

To fold mirrors for parking in restricted areas, push the mirror folding button.

The key must be in the “ACC” or “ON” position.

Position 1—To fold the mirrors
Position 2—To return the mirrors back to their original positions

⚠ **CAUTION**
To avoid personal injury and any mirror malfunction, do not touch the mirror while it is moving.

—Folding rear view mirrors

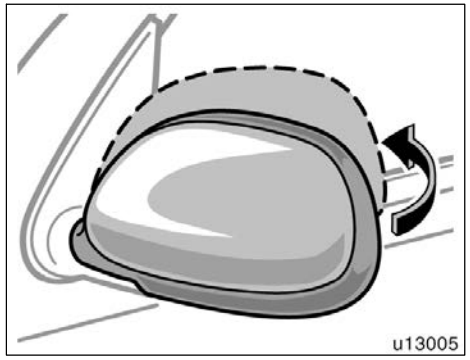

The rear view mirrors can be folded backward for parking in restricted areas.

To fold the rear view mirror, push backward.

Type A only—

If the key is turned from “LOCK” to “ACC” the mirror will move automatically according to the position of the mirror folding button.

CAUTION

Do not drive with the mirrors folded backward. Both the driver and passenger side rear view mirrors must be extended and properly adjusted before driving.

Anti−glare inside rear view mirror

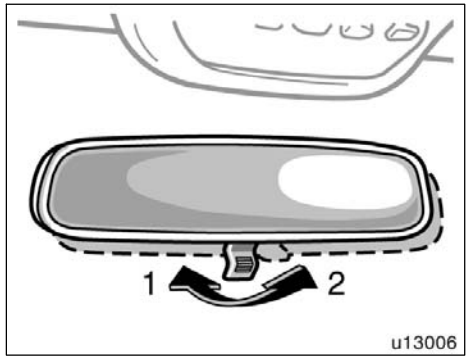

Adjust the mirror so that you can just see the rear of your vehicle in the mirror.

To reduce glare from the headlights of the vehicle behind you during night driving, operate the lever on the lower edge of the mirror.

Daylight driving—Lever at position 1

The reflection in the mirror has greater clarity at this position.

Night driving—Lever at position 2

Remember that by reducing glare you also lose some rear view clarity.

CAUTION

Do not adjust the mirror while the vehicle is moving. It may cause the driver to mishandle the vehicle and an accident may occur resulting in personal death or injuries.

Sun visors—

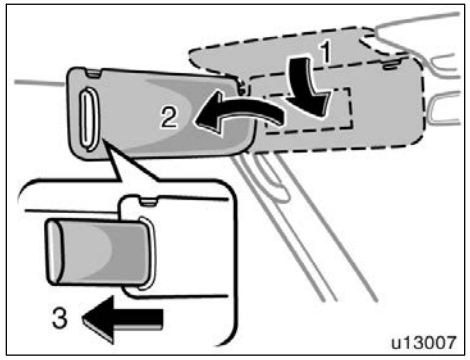

To block out glare, move the sun visor.

To block out glare from the front—Swing down the sun visor (position 1).

To block out glare from the side—Swing down the sun visor, remove it from the hook and swing it to the lateral side (position 2).

If glare comes from obliquely behind you, extend the plate at the end of the visor (to position 3).

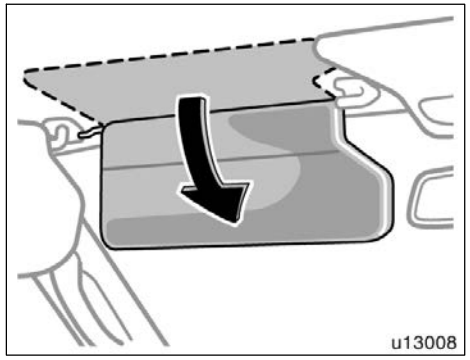

To block the glare from the front when the main sun visor is swung to the lateral side (position 2), swing down the sub visor.

⚠ CAUTION

Do not extend the plate at the end of the sun visor when the visor is in the position 1. It can cover the anti−glare inside rear view mirror and obstruct the rear view.

—Vanity mirrors

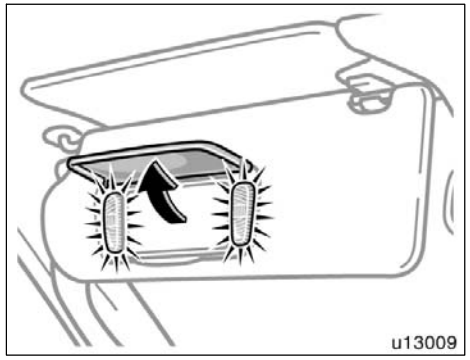

To use the vanity mirrors, swing down the sun visor and open the cover.

On some models, the vanity light comes on when you open the cover.

SECTION 1–4

OPERATION OF INSTRUMENTS AND CONTROLS

Lights, Wipers and Defogger

Headlights and turn signals 110
Emergency flashers 113
Instrument panel light control 114
Front fog lights 114
Personal lights 115
Center interior and personal lights 115
Luggage compartment light 116
Ignition switch light 117
Windshield wipers and washer 117
Back window wiper and washer 118
Back window and outside rear view mirror defoggers 119

Headlights and turn signals (with automatic light control system)

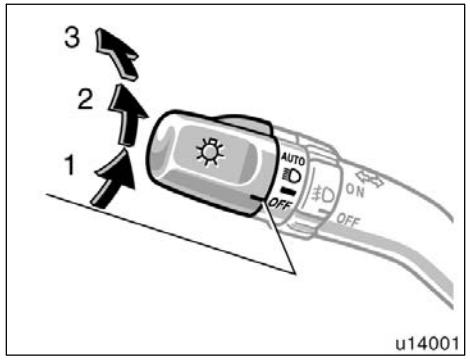

HEADLIGHTS

To turn on the following lights: Twist the headlight/turn signal lever knob.

Position 1—Parking, tail, license plate, side marker and instrument panel lights

Position 2—Headlights and all of the above

Position 3 (“AUTO”)—Headlights and/or all of the lights in position 1

They automatically turn on or off depending on the darkness of the surroundings.

Manually twist the knob to the position 2 to turn on the headlights if they are needed immediately when entering a dark tunnel, parking structure, etc.

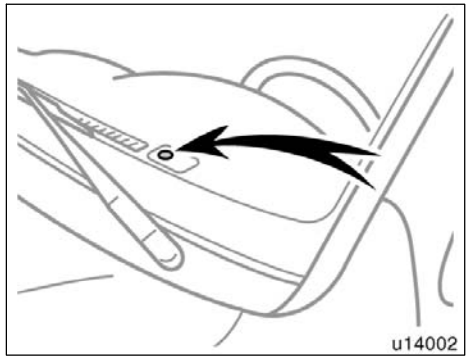

The automatic light control sensor is on the top of the driver’s side instrument panel.

Do not place anything on the instrument panel, and/or do not affix anything on the windshield to block this sensor.

If you feel that the automatic light control comes into operation too early or too late, have the sensor adjusted by your Toyota dealer.

The lights automatically turn off after 30 seconds when all the side doors and back door are closed with the ignition key in the “ACC” or “LOCK” position and the lever at position 2.

The lights also automatically turn off when the driver’s door is opened with the lever at position 1.

If the doors are locked by the wireless remote control transmitter, the lights automatically turn off immediately.

To turn them on again, turn the key to the “ON” position or actuate the headlight switch.

If you are going to park for over one week, make sure the headlight switch is off.

The time before the headlights turn off can be changed. For details, contact your Toyota dealer.

NOTICE
To prevent the battery from being discharged, do not leave the lights on for a long period when the engine is not running.

Daytime running light system (all models sold in Canada and some models sold in the U.S.A.)

The headlights turn on when the parking brake is released with the engine started, even with the light switch in the “OFF” position. They will not go off until the ignition switch is turned off.

To turn on the other exterior lights and instrument panel lights, twist the knob to the position 1.

Under the daytime running light system, the headlights turn on at reduced intensity. Twist the knob to the position 2 to turn to full intensity for driving at night.

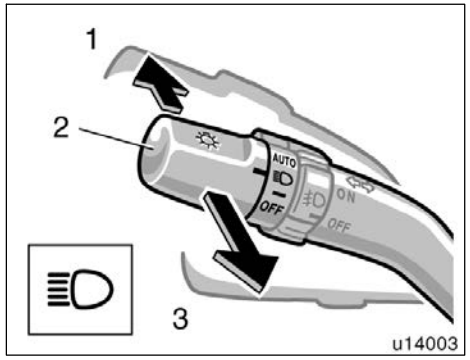

High−Low beams—For high beams, turn the headlights on and push the lever away from you (position 1). Pull the lever toward you (position 2) for low beams.

The headlight high beam indicator light (blue light) on the instrument panel will tell you that the high beams are on.

Flashing the high beam headlights (position 3)—Pull the lever all the way back. The high beam headlights turn off when you release the lever.

You can flash the high beam headlights with the knob turned to “OFF”.

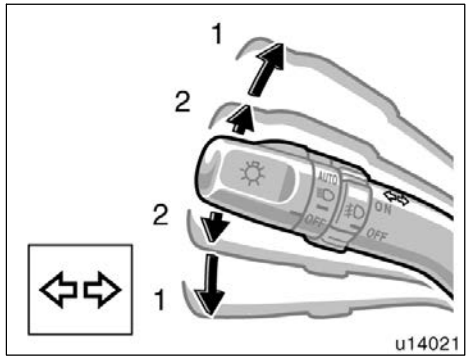

TURN SIGNALS

To signal a turn, push the headlight/turn signal lever up or down to position 1.

The key must be in the “ON” position.

The lever automatically returns after you make a turn, but you may have to return it by hand after you change lanes.

To signal a lane change, move the lever up or down to the pressure point (position 2) and hold it.

If the turn signal indicator lights (green lights) on the instrument panel flash faster than normal, a front or rear turn signal bulb is burned out.

Headlights and turn signals (without automatic light control system)

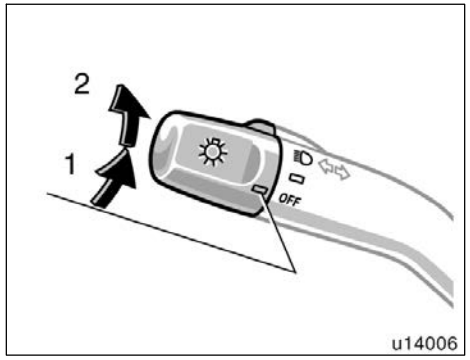

HEADLIGHTS

To turn on the following lights: Twist the headlight/turn signal lever knob.

Position 1—Parking, tail, license plate, side marker and instrument panel lights

Position 2—Headlights and all of the above

The lights automatically turn off after 30 seconds when all the side doors and back door are closed with the ignition key in the “ACC” or “LOCK” position and the lever at position 2.

The lights also automatically turn off when the driver’s door is opened with the lever at position 1.

If the doors are locked by the wireless remote control transmitter, the lights automatically turn off immediately.

To turn them on again, turn the key to the “ON” position or actuate the headlight switch.

If you are going to park for over one week, make sure the headlight switch is off.

The timing for the headlights turning off can be changed. For details, contact your Toyota dealer.

NOTICE
To prevent the battery from being discharged, do not leave the lights on for a long period when the engine is not running.

Daytime running light system (all models sold in Canada and some models sold in the U.S.A.)

The headlights turn on at reduced intensity when the parking brake is released with the engine started, even with the light switch in the “OFF” position. They will not go off until the ignition switch is turned off.

To turn on the other exterior lights and instrument panel lights, twist the knob to the position 1.

Twist the knob to the position 2 to turn to full intensity for driving at night.

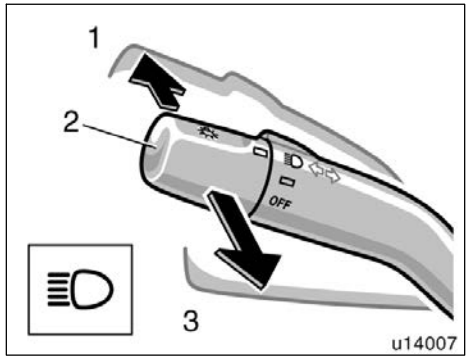

High−Low beams—For high beams, turn the headlights on and push the lever away from you (position 1). Pull the lever toward you (position 2) for low beams.

The headlight high beam indicator light (blue light) on the instrument panel will tell you that the high beams are on.

Flashing the high beam headlights (position 3)—Pull the lever all the way back. The high beam headlights turn off when you release the lever.

You can flash the high beam headlights with the knob turned to “OFF”.

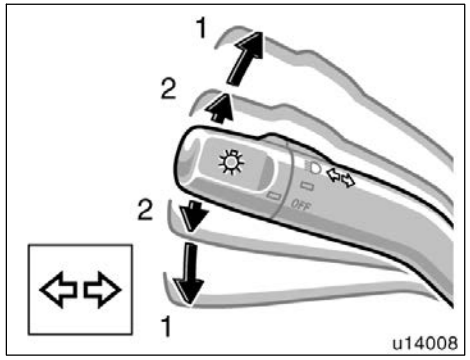

TURN SIGNALS

To signal a turn, push the headlight/ turn signal lever up or down to position 1.

The key must be in the “ON” position.

The lever automatically returns after you make a turn, but you may have to return it by hand after you change lanes.

To signal a lane change, move the lever up or down to the pressure point (position 2) and hold it.

If the turn signal indicator lights (green lights) on the instrument panel flash faster than normal, a front or rear turn signal bulb is burned out.

Emergency flashers

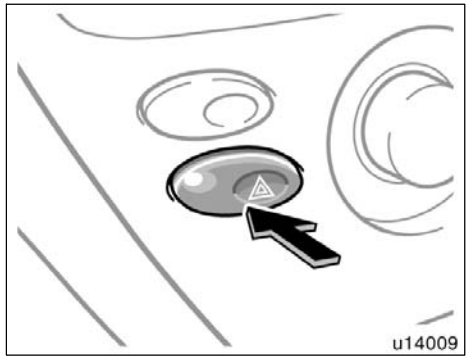

To turn on the emergency flashers, push the switch.

All the turn signal lights will flash. To turn them off, push the switch once again.

Turn on the emergency flashers to warn other drivers if your vehicle must be stopped where it might be a traffic hazard.

Always pull as far off the road as possible.

The turn signal light switch will not work when the emergency flashers are operating.

NOTICE
To prevent the battery from being discharged, do not leave the switch on longer than necessary when the engine is not running.

Instrument panel light control

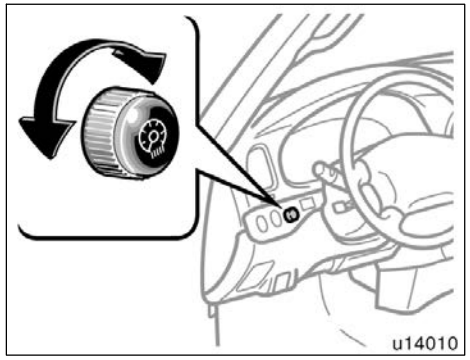

To adjust the brightness of the instrument panel lights, turn the knob.

Front fog lights

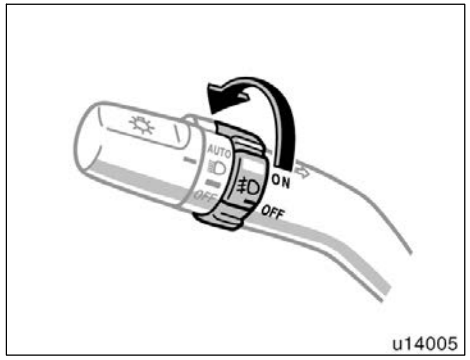

To turn on the front fog lights, twist the band of the headlight and turn signal switch lever. They will come on only when the headlights are on low beam.

Personal lights

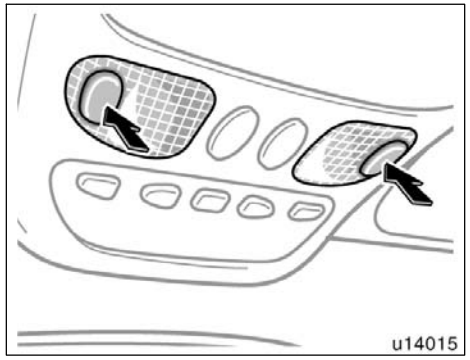

To turn on the personal light, push the switch. To turn the light off, push the switch once again.

Center interior and personal lights

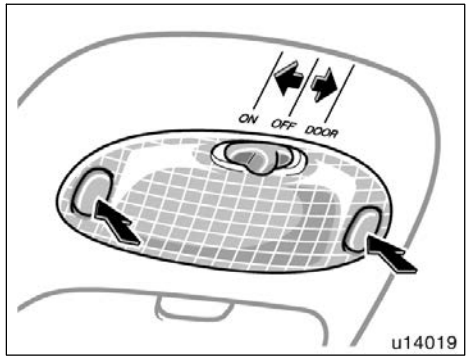

Without electric moon roof

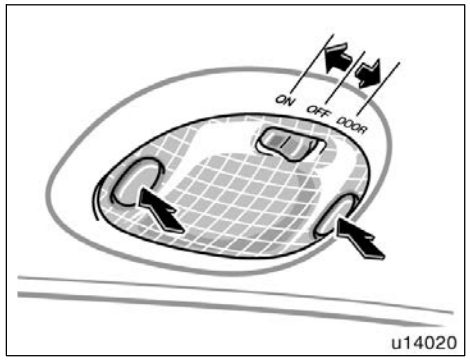

With electric moon roof

CENTER INTERIOR LIGHT

To turn on the interior light, slide the switch.

The interior light switch has the following positions:

“ON”—Keeps the light on all the time.

“OFF”—Turns the light off.

“DOOR”—Turns the light on when any of the side doors are opened. The light remains on when all the side doors are closed.

ILLUMINATED ENTRY SYSTEM

With the switch in the “DOOR” position, the light comes on when any of side doors are opened. After all the side doors are closed, the light remains on for a certain time and then goes out.

However, in the following cases, the light goes out immediately:

- All the side doors are closed when the ignition key is in “ACC”, “ON” or “START” position.
- The ignition key is turned to “ACC”, “ON” or “START” after all the side doors are closed.
- All the doors are locked when the light is still on.

à When all the doors are unlocked with a key or wireless remote control transmitter simultaneously, the lights come on for about 15 seconds and then fade out, even if the door is not opened.

The following adjustments can be made in this system. For details, contact your Toyota dealer.

à Cancelling the door key or wireless remote control operation

à Changing the timing for the light turning off

To prevent the battery being discharged, the lights will automatically turn off when the key is removed and the door is left opened with the switch at “DOOR” position for 20 minutes or more.

CENTER PERSONAL LIGHTS

To turn on the center personal light, push the switch. To turn the light off, push the switch once again.

Luggage compartment light

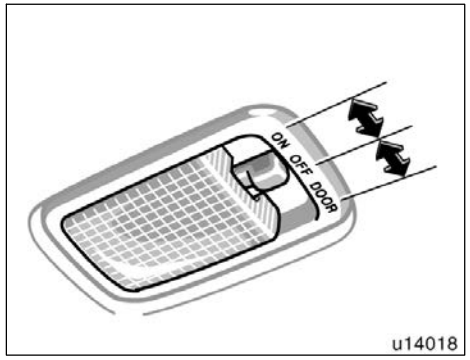

To turn on the luggage compartment light, slide the switch.

The luggage compartment light switch has the following positions:

“ON”—Keeps the light on all the time.

“OFF”—Turns the light off.

“DOOR”—Turns the light on when any of the side doors or back door are opened. The light goes off immediately when the back door is closed. However, the light remains on when all the side doors are closed.

ILLUMINATED ENTRY SYSTEM

With the switch in “DOOR” position, the interior light, luggage compartment light, ignition switch light and foot light come the side doors are closed, the lights remain on for about 15 seconds and then fades out.

However, in the following cases, the lights go off immediately.

à All the doors are closed when the ignition key is in “ACC” or “ON” position.

à The ignition key is turned to “ACC”, “ON”, or “START” after all the side doors are closed.

à All the doors are closed and locked.

When all the doors are unlocked with a key or wireless remote control transmitter simultaneously, the lights come on for about 15 seconds and then fade out, even if the door is not opened.

The following adjustments can be made in this system. For details, contact your Toyota dealer.

à Cancelling the door key or wireless remote control transmitter linked operation

à Changing the timing for the light turning off

Ignition switch light

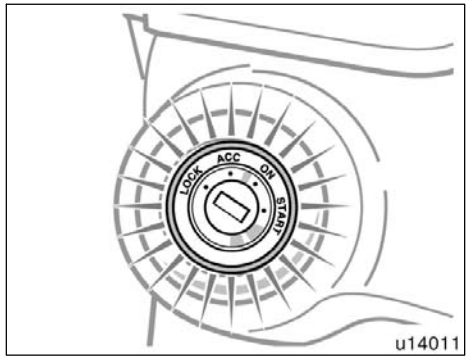

For easy access to the ignition switch, the ignition switch light comes on when any of the side doors are opened.

The light remains on for some time after all the side doors are closed.

However, in the following cases, the lights go off immediately.

- All the doors are closed when the ignition key is in “ACC” or “ON” position.
- The ignition key is turned to “ACC”, “ON”, or “START” after all the side doors are closed.
- All the doors are closed and locked.

When all the doors are unlocked with a key or wireless remote control transmitter simultaneously, the ignition switch light comes on for about 15 seconds and then fade out, even if the door is not opened.

To prevent the battery being discharged, the light will automatically turn off when the key is removed and the door is left opened for 20 minutes or more.

The following adjustments can be made in this system. For details, contact your Toyota dealer.

- Cancelling the door key or wireless remote control transmitter linked operation
- Changing the timing for the light turning off

Windshield wipers and washer

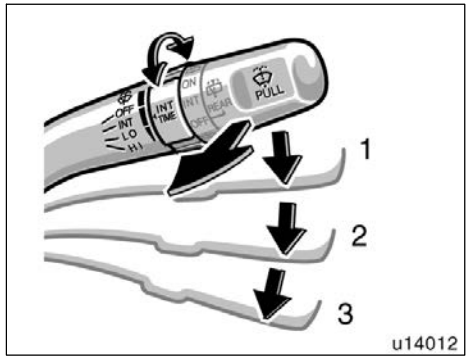

To turn on the windshield wipers, move the lever to the desired setting.

The key must be in the “ON” position.

Lever position	Speed setting
Position 1	Intermittent
Position 2	Slow
Position 3	Fast

The “INT TIME” band lets you adjust the wiping time interval when the wiper lever is in the intermittent position (position 1). Twist the band upward to increase the time between sweeps, and downward to decrease it.

To squirt washer fluid, pull the lever toward you.

If the windshield wipers are off, they will operate a couple of times after the washer squirts.

For instructions on adding washer fluid, see “Adding washer fluid” on page 299 in Section 7−3.

In freezing weather, warm the windshield with the defroster before using the washer. This will help prevent the washer fluid from freezing on your windshield, which can block your vision.

NOTICE
Do not operate the wipers if the windshield is dry. It may scratch the glass.

Back window wiper and washer

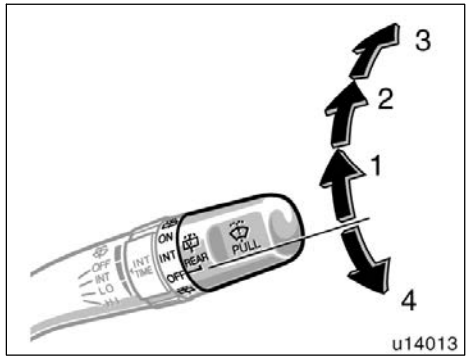

To turn on the back window wiper, twist the lever knob upward.

The key must be in the “ON” position.

Lever position	Speed setting
Position 1	Intermittent
Position 2	Normal

To squirt washer fluid on the back window, twist the knob upward or downward as far as it will go (position 3 or 4). The knob automatically returns from these positions after you release it.

For instructions on adding washer fluid, see “Adding washer fluid” on page 299 in Section 7−3.

NOTICE
Do not operate the back window wiper if the back window is dry. It may scratch the glass.

Back window and outside rear view mirror defoggers

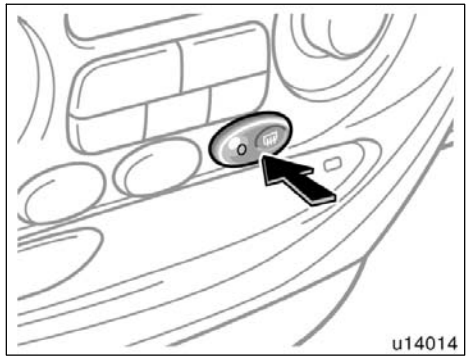

To defog or defrost the back window, push the switch with the back window closed.

The key must be in the “ON” position.

The thin heater wires on the inside of the back window will quickly clear the surface. An indicator light will illuminate to indicate the defogger is operating.

On some models, heater panels in the outside rear view mirrors will also quickly clear the surfaces.

Push the switch once again to turn the defogger off.

The system will automatically shut off after the defoggers have operated about 15 minutes.

Make sure you turn the defoggers off when the surfaces are clear. Leaving the defoggers on for a long time could cause the battery to discharge, especially during stop−and−go driving. The defoggers are not designed for drying rain water or for melting snow.

⚠ CAUTION

On some models, since the mirror surfaces can get hot, keep your hands off them when the defogger switch is on.

NOTICE

When cleaning the inside of the back window, be careful not to scratch or damage the heater wires or connectors.

SECTION 1–5

OPERATION OF INSTRUMENTS AND CONTROLS

Gauges, Meters and Service reminder indicators

Fuel gauge 122
Engine coolant temperature gauge 122
Oil pressure gauge 123
Volt meter 124
Tachometer 124
Odometer and two trip meters 124
Service reminder indicators and warning buzzers 125

Fuel gauge

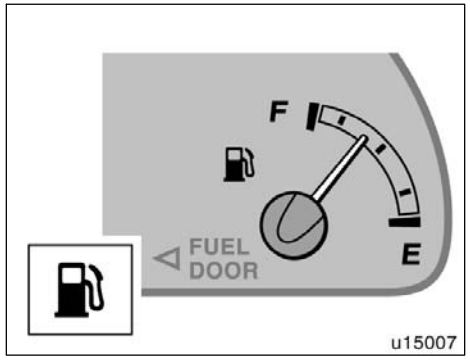

The gauge works when the ignition switch is on and indicates the approximate quantity of fuel remaining in the tank.

Nearly full—Needle at “F”
Nearly empty—Needle at “E”

It is a good idea to keep the tank over 1/4 full.

If the fuel level approaches “E” or the low fuel level warning light comes on, fill the fuel tank as soon as possible.

On inclines or curves, due to the movement of fuel in the tank, the fuel gauge needle may fluctuate or the low fuel level warning light may come on earlier than usual.

If the fuel tank is completely empty, the malfunction indicator lamp comes on. Fill the fuel tank immediately.

The indicator lamp goes off after driving several times. If the indicator lamp does not go off, contact your Toyota dealer as soon as possible.

Engine coolant temperature gauge

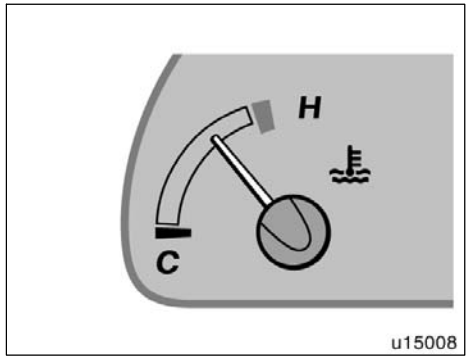

The gauge indicates the engine coolant temperature when the ignition switch is on. The engine operating temperature will vary with changes in weather and engine load.

If the needle moves into the red zone, your engine is too hot. If your vehicle overheats, stop your vehicle and allow the engine to cool.

Your vehicle may overheat during severe operating conditions, such as:

- Driving up a long hill on a hot day.
- Reducing speed or stopping after high speed driving.

- Idling for a long period with the air conditioning on in stop−and−go traffic.
- Towing a trailer.

NOTICE
Do not remove the thermostat in the engine cooling system as this may cause the engine to overheat. The thermostat is designed to control the flow of coolant to keep the temperature of the engine within the specified operating range.
Do not continue driving with an overheated engine. See "If your vehicle overheats" in Section 4.

Oil pressure gauge

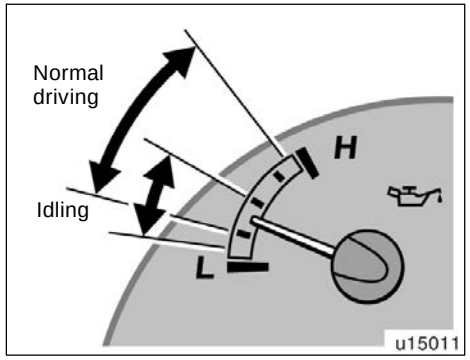

The oil pressure gauge indicates engine oil pressure when the ignition switch is on. Check it while driving to make sure that the needle is in the proper range.

If the oil pressure should stay below the normal range, pull off the road to a safe place and stop the engine immediately. Call a Toyota dealer or qualified repair shop for assistance.

Oil pressure may not build up when the oil level is too low. The oil pressure gauge is not designed to indicate oil level, and the oil level must be checked using the level dipstick.

NOTICE
Do not drive the vehicle with the oil pressure below the normal range until the cause is fixed—it may ruin the engine.

Voltmeter

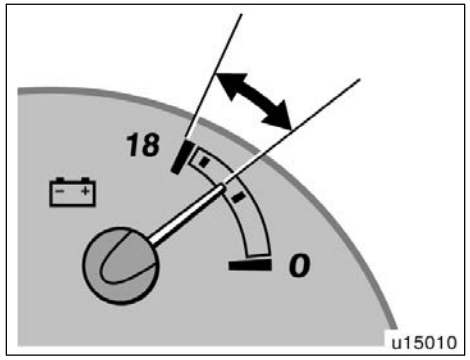

The voltmeter tells whether the battery is charged or discharged. Check it while the engine is running—the needle should always indicate as shown above.

If the needle reads below or above the normal range while the engine is running, it indicates the charging system needs immediate repair.

However, it is normal for the needle to drop below the normal range during engine starting.

Tachometer

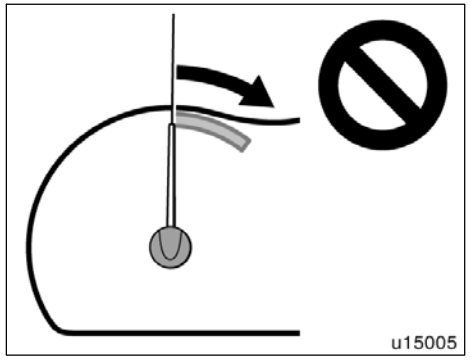

The tachometer indicates engine speed in thousands of rpm (revolutions per minute). Use it while driving to select correct shift points and to prevent engine lugging and over−revving.

Driving with the engine running too fast causes excessive engine wear and poor fuel economy. Remember, in most cases the slower the engine speed, the greater the fuel economy.

NOTICE
Do not let the indicator needle get into the red zone. This may cause severe engine damage.

Odometer and two trip meters

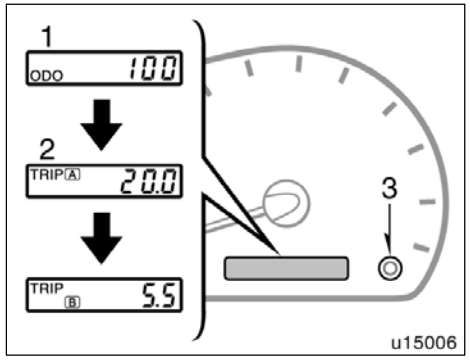

This meter displays the odometer and two trip meters.

1. Odometer—Shows the total distance the vehicle has been driven.
2. Two trip meters—Show two different distances independently driven since the last time each trip meter was set to zero.

   You can use one trip meter to calculate the fuel economy and the other to measure the distance on each trip. All trip meter data is cancelled if the electrical power source is disconnected.
3. Trip meter reset knob—Resets the two trip meters to zero, and also change the meter display.

To change the meter display, quickly push and release the knob. The meter display changes in the order from the odometer to trip meter A to trip meter B, then back to the odometer each time you push.

To reset the trip meter A to zero, display the meter A reading, then push and hold the knob until the meter is set to zero. The same process can be applied for resetting the trip meter B.

Service reminder indicators and warning buzzers

If the indicator or buzzer comes on...	Do this.
(a) BRAKE	If parking brake is off, stop immediately and contact Toyota dealer.
(b) (indicator and buzzer)	Fasten driver's seat belt.
(c) PASSENGER	Fasten front passenger's seat belt.
(d)	Stop and check.
(e) CHECK	Take vehicle to Toyota dealer.

If the indicator or buzzer comes on...	Do this.
(f)	Fill up tank.
(g) ABS or tem also	Take vehicle to Toyota dealer. If the brake system warning light is on, stop immediately and contact Toyota dealer.
(h) VSC TRAC	Take vehicle to Toyota dealer.
(i)	Close all doors.

If the indicator or buzzer comes on...		Do this.
(j)		Take vehicle to Toyota dealer immediately.
(k)	Key reminder buzzer	Remove key.
(l)	A/T P	Shift front drive control lever out of “N”.
(m)	A/T OIL TEMP	Stop and check.
(n)		Add washer fluid.

(a) Brake System Warning Light

This light comes on in the following cases when the ignition key is in the “ON” position.

à **When the parking brake is applied...**

This light comes on for a few seconds when the ignition key is turned to the “ON” position even after the parking brake is released.

à **When the brake fluid level is low...**

CAUTION

It is dangerous to continue driving normally when the brake fluid level is low.

Have your vehicle checked at your Toyota dealer in the following cases:

à The light does not come on even if the parking brake is applied when the ignition key is in the “ON” position.

à The light does not come on even if the ignition key is turned on with the parking brake released.

A warning light turning on briefly during operation does not indicate a problem.

CAUTION

If either of the following conditions occurs, immediately stop your vehicle at a safe place and contact your Toyota dealer.

à **The light does not turn off even after the parking brake is released while the engine is running.**

In this case, the brakes may not work properly and your stopping distance will become longer. Depress the brake pedal firmly and bring the vehicle to an immediate stop.

à **The brake system warning light remains on together with the “ABS” warning light.**

In this case, not only the anti−lock brake system will fail but also the vehicle will become extremely unstable during braking.

(b) Driver's Seat Belt Reminder Light and Buzzer

This light and buzzer remind you to buckle up the driver's seat belt.

Once the ignition key is turned to "ON" or "START", the reminder light flashes and buzzer come on if the driver's seat belt is not fastened. Unless the driver fastens the belt, the light keeps on flashing and the buzzer sounds for about 4 to 8 seconds.

(c) Front Passenger's Seat Belt Reminder Light

This light reminds you to buckle up the front passenger's seat belt.

Once the ignition key is turned to "ON" or "START", the reminder light flashes if a passenger sits in the front passenger seat and does not fasten the seat belt. However, if a front passenger uses an additional seat cushion, the light may not flash even when the seat belt is not buckled up.

If luggage load is placed on the front passenger seat, depending on its weight and how it is placed on the seat, built–in sensors in the seat cushion may detect the pressure, causing the reminder light to come on.

(d) Discharge Warning Light

This light warns that the battery is being discharged.

If it comes on while you are driving, there is a problem somewhere in the charging system.

The engine ignition will continue to operate, however, until the battery is discharged. Turn off the air conditioning, blower, radio, etc., and drive directly to the nearest Toyota dealer or repair shop.

NOTICE
Do not continue driving if the engine drive belt is broken or loose.

(e) Malfunction Indicator Lamp

This lamp comes on when the ignition key is turned to the "ON" position and goes off after the engine starts. This means that the warning light system is operating properly.

If the lamp remains on or the lamp comes on while driving, first check the followings.

- Empty fuel tank

  If the fuel tank is empty, refuel immediately.

- Loose fuel tank cap

  If the fuel tank cap is loose, securely tighten it.

These cases are temporary malfunctions. The malfunction indicator lamp will go off after taking several driving trips.

If the lamp will not go off even after the several trips, contact your Toyota dealer as soon as possible.

If the fuel tank is not empty or the fuel tank cap is not loose...

- There is a problem somewhere in the engine, emission control system, electronic throttle control system, automatic transmission electrical system or warning light system itself.

Contact your Toyota dealer as soon as possible to service the vehicle.

If the engine speed does not increase with the accelerator pedal depressed down to about the middle position, there may be a problem somewhere in your electronic throttle control system.

At this time, if you depress the accelerator pedal more firmly and slowly, you can drive your vehicle at low speeds. Have your vehicle checked by your Toyota dealer as soon as possible.

Even if the abnormality of the electronic throttle control system is corrected during low speed driving, the system may not be recovered until the engine is stopped and the ignition key is turned to “ACC” or “LOCK” position.

CAUTION

Be especially careful to prevent erroneous pedal operation.

Emissions inspection and maintenance (I/M) programs

We recommend you to contact your Toyota dealer to check your vehicle’s emission control system and OBD (On−Board Diagnostics) system before taking your vehicle for a state emission inspection.

For details, see “Emissions Inspection and Maintenance (I/M) programs” on page 276 in Section 6.

(f) Low Fuel Level Warning Light

This light comes on when the fuel level in the tank becomes nearly empty. Fill up the tank as soon as possible.

On inclines or curves, due to the movement of fuel in the tank, the low fuel level warning light may come on earlier than usual.

(g) “ABS” Warning Light

The light comes on when the ignition key is turned to the “ON” position. If the anti−lock brake system works properly, the light turns off after a few seconds. Thereafter, if the system malfunctions, the light comes on again.

When the “ABS” warning light is on (and the brake system warning light is off), the anti−lock brake system, the traction control system (two−wheel drive vehicles), the active traction control system (four−wheel drive vehicles) and the vehicle skid control system do not operate, but the brake system still operates conventionally.

When the “ABS” warning light is on (and the brake system warning light is off), the anti−lock brake system does not operate so that the wheels could lock up during a sudden braking or braking on slippery road surfaces.

If either of the following conditions occurs, this indicates a malfunction somewhere in the parts monitored by the warning light system. Contact your Toyota dealer as soon as possible to service the vehicle.

- The light does not come on when the ignition key is turned to the “ON” position, or remains on.
- The light comes on while you are driving.

A warning light turning on briefly during operation does not indicate a problem.

CAUTION

If the “ABS” warning light remains on together with the brake system warning light, immediately stop your vehicle at a safe place and contact your Toyota dealer.

In this case, not only the anti−lock brake system will fail but also the vehicle will become extremely unstable during braking.

(h) "VSC/TRAC" Warning Light

This light warns that there is a problem somewhere in the vehicle skid control system and traction control system (two−wheel drive models) or active traction control system (four−wheel drive models).

The light will come on when the ignition key is turned to "ON" and will go off after a few seconds.

If the light comes on while driving, the system does not work. However, as conventional braking operates when applied, there is no problem to continue your driving.

In the following cases, contact your Toyota dealer:

- The warning light does not come on after the ignition key is turned to "ON".
- The warning light remains on after the ignition key is turned to "ON".
- The warning light comes on while driving.

(i) Open Door Warning Light

This light remains on until all the side doors and back door are completely closed.

(j) SRS Warning Light

This light will come on when the ignition key is turned to the "ON" position. After about 6 seconds, the light will go off. This means the system of the airbag and front seat belt pretensioner are operating properly.

The warning light system monitors the airbag sensor assembly, front airbag sensors, side and curtain shield airbag sensors, front seat belt pretensioner assemblies, inflators, warning light, interconnecting wiring and power sources.

If either of the following conditions occurs, this indicates a malfunction somewhere in the parts monitored by the warning light system. Contact your Toyota dealer as soon as possible to service the vehicle.

- The light does not come on when the ignition key is turned to the "ACC" or "ON" position or remains on.
- The light comes on or flashes while driving.

(k) Key Reminder Buzzer

This buzzer reminds you to remove the key when you open the driver's door with the ignition key in the "ACC" or "LOCK" position.

(l) Unengaged "Park" Warning Light

This light warns that the transmission "Park" mechanism is not engaged. If the front drive control lever is in the "N" position while the selector lever is in the "P" position, the transmission will disengage and the wheels will not lock.

⚠ CAUTION

To restore the park function, shift the front drive control lever out of "N", or the vehicle can move.

(m) Automatic Transmission Fluid Temperature Warning Light

This light warns that the automatic transmission fluid temperature is too high.

If this light comes on while you are driving, slow down and pull off the road. Stop the vehicle at a safe place and put the selector lever in “P”. With the engine idling, wait until the light goes off. If the light goes off, you may start the vehicle again. If the light does not go off, call a Toyota dealer or qualified repair shop for assistance.

NOTICE
Continued driving with the warning light on may damage the automatic transmission.

(n) Low windshield Washer Fluid Level Warning Light

This light warns that the windshield washer fluid level is too low. Add washer fluid at your earliest opportunity. (For instructions, see “Adding washer fluid” on page 299 in Section 7−3.)

CHECKING SERVICE REMINDER INDICATORS (except the low fuel level warning light and low windshield washer fluid level warning light)

1. Apply the parking brake.
2. Open one of the side doors or back door.
   The open door warning light should come on.
3. Close the door.
   The open door warning light should go off.
4. Turn the ignition key to “ON”, but do not start the engine.
   All the service reminder indicators except the open door warning light should come on. The “ABS” and “VSC/TRAC” warning lights, “TRAC OFF” (two−wheel drive models) or “VSC OFF” (four−wheel drive models) indicator light and slip indicator light go off after a few seconds. The SRS warning light goes off after about 6 seconds.
5. Place the four−wheel control lever in “N” position and the selector lever in “P” position.
   The unengaged “Park” warning light should come on.
6. Shift the four−wheel drive control lever out of “N”.
   The unengaged “Park” warning light should go off.

If any service reminder indicator or warning buzzer does not function as described above, have it checked by your Toyota dealer as soon as possible.

SECTION 1–6

OPERATION OF INSTRUMENTS AND CONTROLS

Ignition switch, Transmission and Parking brake

Ignition switch with steering lock 132
Automatic transmission 133
Four−wheel drive system 137
Traction control system 140
Active traction control system 143
Vehicle skid control system 145
Parking brake 147
Cruise control 148

Ignition switch with steering lock

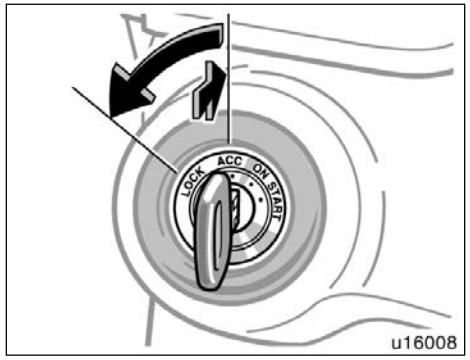

“START”—Starter motor on. The key will return to the “ON” position when released.

For starting tips, see page 227 in Section 3.

“ON”—Engine on and all accessories on.

This is the normal driving position.

“ACC”—Accessories such as the radio operate, but the engine is off.

If you leave the key in the “ACC” or “LOCK” position and open the driver’s door, a buzzer will remind you to remove the key.

“LOCK”—Engine is off and the steering wheel is locked. The key can be removed only at this position.

You must shift the selector lever into the “P” position before turning the key from “ACC” to the “LOCK” position.

Once you remove the key, the engine immobiliser system is automatically set. (See “Engine immobiliser system” on page 10 in Section 1−2.)

When starting the engine, the key may seem stuck at the “LOCK” position. To free it, first be sure the key is pushed all the way in, and then rock the steering wheel slightly while turning the key gently.

NOTICE
Do not leave the key in the “ON” position if the engine is not running. The battery will discharge and the ignition could be damaged.

Automatic transmission

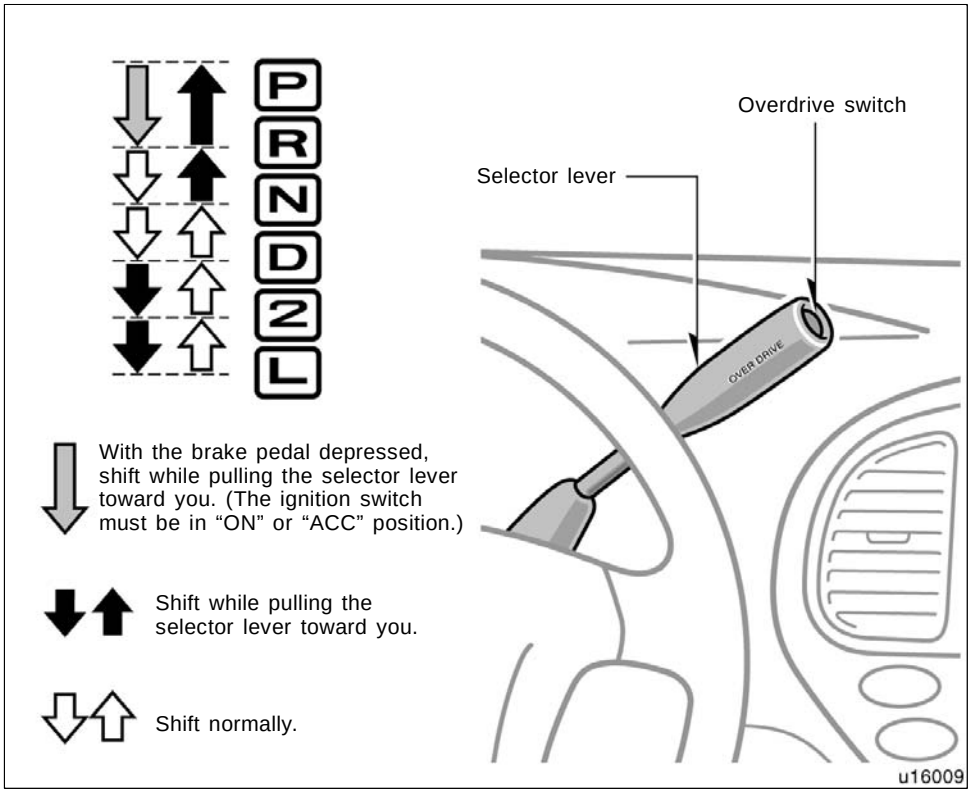

Your automatic transmission has a shift lock system to minimize the possibility of incorrect operation. This means you can only shift out of “P” position when the brake pedal is depressed (with the ignition switch in “ON” or “ACC” position and the selector lever pulled toward you).

(a) Selector lever

The shift position is displayed on the instrument cluster.

P: Parking, engine starting and key removal

R: Reverse

N: Neutral

D: Normal driving (with overdrive on)

2: Stronger engine braking

L: Maximum engine braking

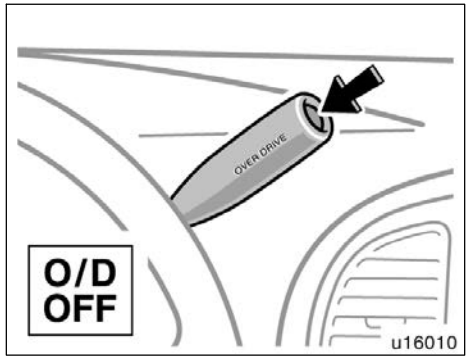

(b) Overdrive switch

You can select either third gear (with overdrive off) or fourth gear (with overdrive on) by pushing this switch.

To turn the overdrive off, push the switch. The “O/D OFF” indicator light should come on. To turn the overdrive on again, push the switch again. The “O/D OFF” indicator light should go off.

Always drive your vehicle with the overdrive on for better fuel economy and quieter driving.

If the engine is turned off when the overdrive is off and restarted, the overdrive will be on automatically.

When the cruise control is being used, even if you downshift the transmission by pushing and releasing the overdrive switch, engine braking will not be enabled because the cruise control is not cancelled.

For ways to decrease the vehicle speed, see “Cruise control” on page 148 in this section.

(c) Normal driving

1. Start the engine as instructed in “How to start the engine” on page 228 in Section 3. The transmission must be in “P” or “N”.

When the front drive control lever is in “L4” (low−speed position, four−wheel drive), the driving pattern selector setting has no effect on gear shift timing. (See “Four−wheel drive system” on page 137 in this section for information of the front drive control lever.)

2. With your foot holding down the brake pedal, shift the selector lever to “D”.

When the lever is in the “D” position, the automatic transmission system will select the most suitable gear for running conditions such as normal cruising, hill climbing, hard towing, etc.

Always turn the overdrive on for better fuel economy and quieter driving. If the engine coolant temperature is low or when the front drive control lever is in “L4” (low−speed position, four−wheel drive), the transmission will not shift into the overdrive gear even with the overdrive on. (See “Four−wheel drive system” on page 137 in this section for information of the front drive control lever.)

⚠ CAUTION

Never put your foot on the accelerator pedal while shifting.

3. Release the parking brake and brake pedal. Depress the accelerator pedal slowly for smooth starting.

If the automatic locking operation linked to shift lever position is set, all doors are automatically locked when the shift lever is moved out of “P” position after the ignition switch is turned to the “ON” position and all the doors are closed. For details, see “—Automatic door locking and unlocking functions” on page 14 in Section 1−2.

(d) Using engine braking

To use engine braking, you can downshift the transmission as follows:

- Push the overdrive switch. The “O/D OFF” indicator light will come on and the transmission will downshift to third gear.
- Shift into the “2” position. The transmission will downshift to second gear when the vehicle speed drops down to or lower than the following speed, and stronger engine braking will be enabled.

  Two−wheel drive models
  110 km/h (68 mph)

  Four−wheel drive models

  Front drive control lever in “H” (2WD) or “H” (4WD)
  110 km/h (68 mph)

  Front drive control lever in “L4”
  39 km/h (24 mph)

- Shift into the “L” position. The transmission will downshift to first gear when the vehicle speed drops down to or lower than the following speed, and maximum engine braking will be enabled.

  Two−wheel drive models
  55 km/h (34 mph)

  Four−wheel drive models

  Front drive control lever in “H” (2WD) or “H” (4WD)
  55 km/h (34 mph)

  Front drive control lever in “L4”
  10 km/h (5 mph)

When the cruise control is being used, even if you downshift the transmission by pushing and releasing the overdrive switch, engine braking will not be enabled because the cruise control is not cancelled.

For ways to decrease the vehicle speed, see “Cruise control” on page 148 in this section.

⚠ CAUTION

Be careful when downshifting on a slippery surface. Abrupt shifting could cause the vehicle to spin or skid.

(e) Using the “2” and “L”, positions

The “2” and “L” positions are used for strong engine braking as described previously.

With the selector lever in “2” or “L”, you can start the vehicle in motion as with the lever in “D”.

With the selector lever in “2”, the vehicle will start in first gear and automatically shift to second gear.

With the selector lever in “L”, the transmission is engaged in first gear.

NOTICE

- ***Be careful not to over−rev the engine. Watch the tachometer to keep engine rpm from going into the red zone. The approximate maximum allowable speed for each position is given above for your reference:***

  Two−wheel drive models
  "2" ..... 110 km/h (68 mph)
  "L" ..... 60 km/h (38 mph)

  Four−wheel drive models

  Front drive control lever in "H" (2WD) or "H" (4WD)
  "2" ..... 110 km/h (68 mph)
  "L" ..... 60 km/h (38 mph)

  Front drive control lever in "L4"
  "2" ..... 45 km/h (28 mph)
  "L" ..... 25 km/h (16 mph)

- ***Do not continue hill climbing or hard towing for a long time in the "2" or "L" position. This may cause severe automatic transmission damage from overheating. To prevent such damage, "D" position should be used in hill climbing or hard towing.***

(f) Backing up

1. Bring the vehicle to a complete stop.
2. With the brake pedal held down with your foot, shift the selector lever to the "R" position.

NOTICE

Never shift into reverse while the vehicle is moving.

(g) Parking

1. Bring the vehicle to a complete stop.
2. With the brake pedal pressed down, fully depress the parking brake pedal to apply the parking brake securely.
3. With the brake pedal pressed down, shift the selector lever to the "P" position.

⚠ CAUTION

Never attempt to move the selector lever into "P" position under any circumstances while the vehicle is moving. Serious mechanical damage and loss of vehicle control may result.

If the automatic unlocking operation linked to shift lever position is set, all doors are automatically unlocked when the selector lever is moved to "P" position after the ignition switch is turned to "ON" position. For details, see "—Automatic door locking and unlocking functions" on page 14 in Section 1−2.

(h) Good driving practice

- If the transmission repeatedly shifts up and down between third gear and overdrive when climbing a gentle slope, the overdrive should be turned off. Be sure to turn the switch on immediately afterward.
- When towing a trailer, in order to maintain engine braking efficiency, do not use overdrive.

⚠ CAUTION

Always keep your foot on the brake pedal while stopped with the engine running. This prevents the vehicle from creeping.

NOTICE

Do not hold the vehicle on an upgrade with the accelerator pedal. It can cause the transmission to overheat. Always use the brake pedal or parking brake.

(i) Rocking your vehicle if stuck

CAUTION

If your vehicle becomes stuck in snow, mud, sand, etc., then you may attempt to rock the vehicle free by moving it forward and backward. Do not attempt this procedure if people or objects are anywhere near the vehicle. During the rocking operation the vehicle may suddenly move forward or backward as it becomes unstuck, causing injury or damage to nearby people or objects.

NOTICE

If you rock your vehicle, observe the following precautions to prevent damage to the transmission and other parts.

- ***Do not depress the accelerator pedal while shifting the selector lever or before the transmission is completely shifted to forward or reverse gear.***
- ***Do not race the engine and avoid spinning the wheels.***
- ***If your vehicle remains stuck after rocking the vehicle several times, consider other ways such as towing.***

Four−wheel drive system—
(a) Front drive control

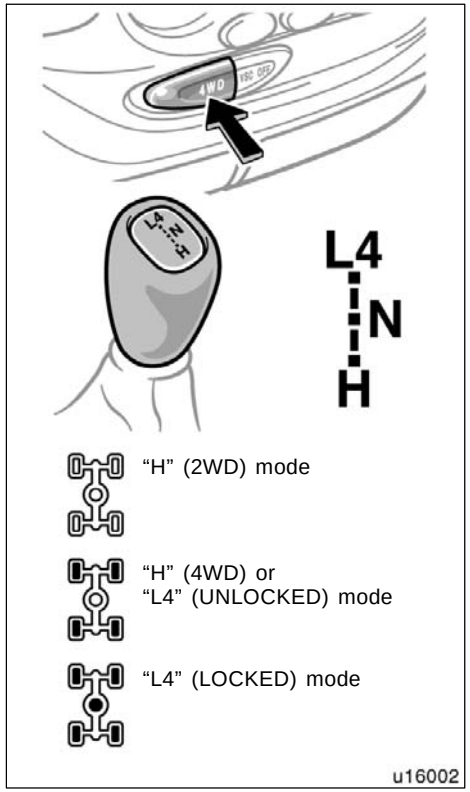

Use the transmission shift lever, front drive control lever and “4WD” switch to select the transfer and center differential modes.

The “H” and “L4” position of the front drive control lever and the “L” position of the transmission shift lever provide either lock or unlock the mode of the center differential.

“H” mode (high speed position, two−wheel drive): Front drive control lever at “H”
Use this for normal driving on dry hard−surfaced roads. This position gives greater economy, quietest ride and least wear and better vehicle control.

“H” mode (high speed position, four−wheel drive, center differential unlocked): Front drive control lever at “H”, “4WD” switch pushed once
Use this for normal driving on all types of roads, from dry hard−surfaced roads to wet, icy or snow−covered roads. This position provides greater traction than two−wheel drive.

“N” mode (neutral position): Front drive control lever at “N”
No power is delivered to the wheels. The vehicle must be stopped.

“L4” mode (low speed position, four−wheel drive, center differential unlocked): Transmission shift lever except at “L”, front drive control lever at “L4”
Use this for maximum power and traction. Use this for climbing steep hills, off−road driving, and hard pulling in sand or mud.

In this mode, the braking feeling that occurs when the wheels are negotiating a sharp corner is further reduced than in the “L4” (low position, four−wheel drive, center differential locked) mode.

If you place the transmission shift lever at “2” in this mode, the transmission automatically shifts up from second gear. This system is effective when starting your vehicle in sand, mud, ice or snow. (However, the transmission system may shift up from first gear when the vehicle starts too quickly.)

“L4” mode (low speed position, four−wheel drive, center differential locked): Transmission shift lever at “L”, front drive control lever at “L4”
Use this for maximum power and traction. Use this for hard pulling in situations the vehicle cannot negotiate even in the “L4” (low speed position, four−wheel drive, center differential unlocked) mode. Also, using this mode when driving down steep off−road inclines will help contribute to increased vehicle stability.

The indicator shows which transfer and center differential mode the vehicle is in.

When the shifting operation has not been completed after moving the lever, the indicator flashes. If the indicator light does not go off when you move the transmission shift lever and/or front drive control lever, drive straight ahead while accelerating or decelerating, or drive in reverse. If the indicator flashes even if doing so, contact your Toyota dealer as soon as possible. There may be a trouble in the four wheel drive system.

See “(c) Shifting procedure” for further instructions.

Advice for driving on slippery roads in "L4" (low speed position) mode

If you shift the front drive control lever to "L4" and the automatic transmission lever to "D" or "2" when you drive in steep off−road areas, the output of the brake can be controlled effectively by the active traction control system, which assists the driver to control the driving power of 4 wheels.

Use the "L" position of the automatic transmission lever for maximum power and traction when your wheels get stuck or when you drive down a steep incline. To control the output of the brake effectively, observe the following directions;

- In the case of uphill driving with the front drive control lever positioned in "L4" and the transmission shift lever positioned in "L", make sure the center differential lock indicator comes on with your vehicle placed at the level.
- When the center differential lock indicator flashes after operating the front drive control lever, "4WD" switch or the transmission shift lever, drive straight ahead while accelerating or decelerating, or drive in reverse.

(b) A.D.D. (automatic disconnecting differential)

The A.D.D. can be engaged or disengaged by the shifting operations described in "(c) Shifting procedure".

You should drive in four−wheel drive for at least 16 km (10 miles) each month. This will assure that the front drive components are lubricated.

(c) Shifting procedure

SHIFTING BETWEEN "H" (2WD) MODE AND "H" (4WD) MODE

To shift from "H" (2WD) mode to "H" (4WD) mode, reduce your speed to less than 100 km/h (62 mph) and push in the "4WD" switch.

If the indicator light flashes when you push in the "4WD" switch, drive straight ahead while accelerating or decelerating.

If the indicator light flashes and the buzzer sounds when you push in the "4WD" switch, reduce your speed or stop the vehicle.

CAUTION

Never push the "4WD" switch if wheels are slipping. Stop the slipping or spinning before shifting.

To shift from "H" (4WD) mode to "H" (2WD) mode, push the "4WD" switch again to turn it off.

This can be done at any vehicle speed.

If the indicator light flashes when you push in the "4WD" switch, drive straight ahead while accelerating or decelerating, or drive in reverse.

SHIFTING BETWEEN "L4" (UNLOCKED) AND "L4" (LOCKED)

To shift between unlock and lock modes in "L4", move the transmission shift lever and front drive control lever.

This can be done at any vehicle speed.

If the indicator light flashes when you move the front drive control lever, drive straight ahead while accelerating or decelerating.

CAUTION

Never move the front drive control lever if wheels are slipping. Stop the slipping or spinning before shifting.

NOTICE

Do not drive on a dry paved surface in "L4" (LOCKED) mode. This may damage the locking mechanism and the drive system.

SHIFTING BETWEEN "H" AND "L4"

If the front drive control lever is shifted from "L4" to "H", the mode will be "H" (4WD).

Stop the vehicle and put the transmission in "N". With your foot holding down the brake pedal, move the front drive control lever.

If the indicator light flashes when you move the front drive control lever or automatic transmission lever, drive straight ahead while accelerating or decelerating.

CAUTION

Never move the front drive control lever if wheels are slipping. Stop the slipping or spinning before shifting.

NOTICE

Do not drive on a dry paved surface in "L4" (LOCKED) mode. This may damage the locking mechanism and the drive system.

Traction control system (two−wheel drive models)

The traction control system automatically helps prevent the spinning of rear wheels when the vehicle is started or accelerated on slippery road surfaces.

When the ignition key is turned to "ON", the system automatically turns on.

CAUTION

Under certain slippery road conditions, full traction of the vehicle and power against rear wheels cannot be maintained, even though the traction control system is in operation. Do not drive the vehicle under any speed or maneuvering conditions which may cause the vehicle to lose traction control. In situations where the road surface is covered with ice or snow, your vehicle should be fitted with snow tires or tire chains. Always drive at an appropriate and cautious speed for the present road conditions.

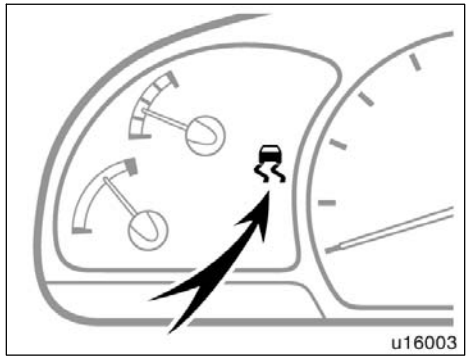

NORMAL DRIVING MODE

Leave the system on during the ordinary driving so that it can operate when needed.

You may hear a sound in the engine compartment for a few seconds when the engine is started or just after the vehicle is started. This means that the traction control system is in the self−check mode, but does not indicate a malfunction.

When the traction control system is operating, the following conditions occur:

- The system controls the spinning of the rear wheels. At this time, the slip indicator light blinks.
- You may feel vibration or noise in your vehicle, caused by operation of the brakes. This indicates the system is functioning properly.

The slip indicator light comes on for a few seconds when the ignition key is turned to “ON”. If the indicator light does not come on when the ignition is turned on, contact your Toyota dealer.

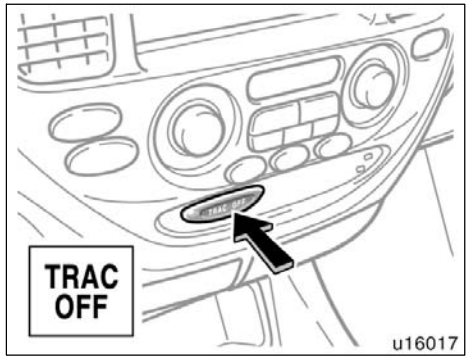

TRACTION CONTROL OFF MODE

If your wheels get stuck in a ditch when you are driving on a severe off road and sand, turn off the traction control system. This system that controls engine performance interferes with the process of freeing your wheels.

To turn off: Push “TRAC OFF” switch.

The “TRAC OFF” indicator light will come on.

To turn on: Push “TRAC OFF” switch once again.

The “TRAC OFF” indicator light will go off.

The traction control system will automatically go on, and the “TRAC OFF” indicator light will go off when you drive over 30 km/h (19 mph) even if the “TRAC OFF” switch is pushed to cancel the traction control system.

“TRAC OFF” indicator light comes on for a few seconds when the ignition key is turned to “ON”. It will come on again when you push the “TRAC OFF” switch to turn off the system.

In the following cases, contact your Toyota dealer:

- The indicator light does not come on when the ignition key is turned “ON”.
- The indicator light remains on after the ignition is turned on.
- The indicator light comes on with the normal driving mode while driving.

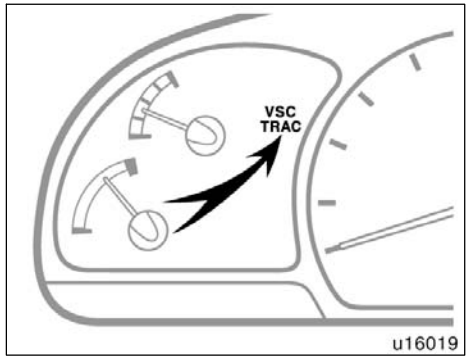

“VSC/TRAC” warning light

This light warns that there is a problem somewhere in the traction control system or the vehicle skid control system.

The light will come on when the ignition key is turned to “ON” and will go off after a few seconds.

The brake actuator temperature increases during continuous operation of the traction control system or vehicle skid control system such as on slippery roads. If the brake actuator temperature becomes too high while the traction control system or vehicle skid control system is operating, a buzzer will start to sound intermittently to indicate that the traction control system can no longer operate. In this case, immediately stop your vehicle at a safe place.

If the system continues to operate, the buzzer sound changes from intermittent to continuous. (The continuous buzzer sounds for about 3 seconds.)

At the time the “VSC/TRAC” warning light will come on and the traction control system temporarily stops operating in order to protect the brake actuator. (Although the traction control system does not operate, there is no problem to continue your driving.) The system will be automatically restored after a short time and the warning light goes out.

If the light comes on while driving, the traction control system does not work. However, as conventional braking operates when applied, there is no problem to continue your driving.

In the following cases, contact your Toyota dealer:

- The warning light does not come on after the ignition key is turned to “ON”.
- The warning light remains on after the ignition key is turned to “ON”.
- The warning light comes on while driving.

Active traction control system

(four−wheel drive models)

The active traction control system automatically helps prevent the spinning of 4 wheels (4WD mode) or rear wheels (2WD mode) when the vehicle is started or accelerated on slippery road surfaces.

When the ignition key is turned to “ON”, the system automatically turns on.

CAUTION

Under certain slippery road conditions, full traction of the vehicle and power against 4 wheels (4WD mode) or rear wheels (2WD mode) cannot be maintained, even though the active traction control system is in operation. Do not drive the vehicle under any speed or maneuvering conditions which may cause the vehicle to lose traction control. In situations where the road surface is covered with ice or snow, your vehicle should be fitted with snow tires or tire chains. Always drive at an appropriate and cautious speed for the present road conditions.

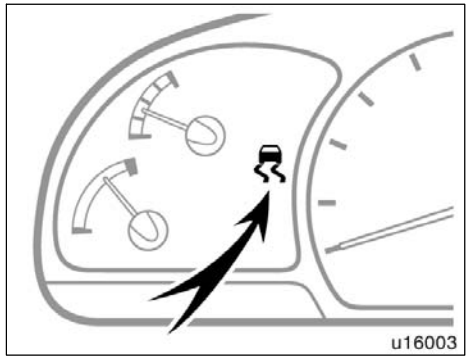

Leave the system on during the ordinary driving so that it can operate when needed.

You may hear a sound in the engine compartment for a few seconds when the engine is started or just after the vehicle is started. This means that the active traction control system is in the self−check mode, but does not indicate a malfunction.

When the traction control system is operating, the following conditions occur:

- The system controls the spinning of the 4 wheels (4WD mode) or rear wheels (2WD mode). At this time, the slip indicator light blinks.
- You may feel vibration or noise in your vehicle, caused by operation of the brakes. This indicates the system is functioning properly.

The slip indicator light comes on for a few seconds when the ignition key is turned to “ON”. If the indicator light does not come on when the ignition is turned on, contact your Toyota dealer.

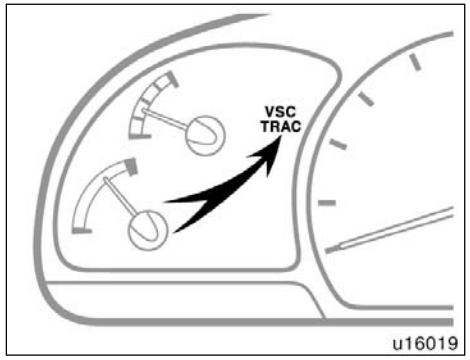

“VSC/TRAC” warning light

This light warns that there is a problem somewhere in the active traction control system or the vehicle skid control system.

The light will come on when the ignition key is turned to “ON” and will go off after a few seconds.

The brake actuator temperature increases during continuous operation of the active traction control system or vehicle skid control system such as on slippery roads. If the brake actuator temperature becomes too high while the active traction control system or vehicle skid control system is operating, a buzzer will start to sound intermittently to indicate that the active traction control system can no longer operate. In this case, immediately stop your vehicle at a safe place.

If the system continues to operate, the buzzer sound changes from intermittent to continuous. (The continuous buzzer sounds for about 3 seconds.)

At the time, the “VSC/TRAC” warning light will come on and the active traction control system temporarily stops operating in order to protect the brake actuator. (Although the active traction control system does not operate, there is no problem to continue your driving.) The system will be automatically restored after a short time and the warning light goes out.

If the light comes on while driving, the active traction control system does not work. However, as conventional braking operates when applied, there is no problem to continue your driving.

In the following cases, contact your Toyota dealer:

- The warning light does not come on after the ignition key is turned to “ON”.
- The warning light remains on after the ignition key is turned to “ON”.
- The warning light comes on while driving.

Vehicle skid control system

The vehicle skid control system helps provide integrated control of the systems such as anti−lock brake system, traction control, engine control, etc. This system automatically controls the brakes and engine to help prevent the vehicle from skidding when cornering on a slippery road surface or operating steering wheel abruptly.

The vehicle skid control activates when the vehicle speed is more than the following speed.

Front drive control lever in “H”
15 km/h (9 mph)
Front drive control lever in “L4”
30 km/h (18 mph)

You may hear a sound in the engine compartment for a few seconds when the engine is started or just after the vehicle is started. This means that the system is in the self−check mode but does not indicate a malfunction.

CAUTION

- **Do not rely excessively on the vehicle skid control system. Even if the vehicle skid control system is operating, you must always drive carefully and attentively to avoid serious injury. Reckless driving will result in an unexpected accident. If the slip indicator light flashes, sounding an alarm sounds, special care should be taken while driving.**
- **Only use tires of specified size. The size, manufacture, brand and tread pattern for all 4 tires should be the same. If you use the tires other than specified, or different type or size, the vehicle stability control system may not function correctly. When replacing the tires or wheels, contact your Toyota dealer. (See “Checking and replacing tires” on page 289 in Section 7−2.)**

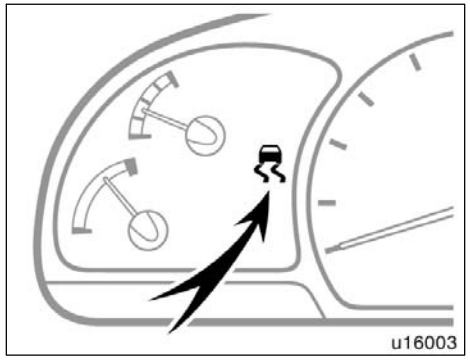

If the vehicle is going to skid during driving, the slip indicator light blinks and an alarm sounds intermittently. Special care should be taken while driving.

The slip indicator light comes on for a few seconds when the ignition key is turned to “ON”. If the indicator light does not come on when the ignition is turned on, contact your Toyota dealer.

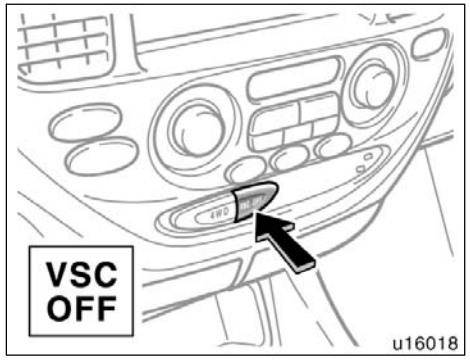

Four−wheel drive models only—

This switch can function only when the four−wheel drive system is selected.

If your wheels get stuck in a ditch when you are driving on a severe off road and sand, turn off the vehicle skid control system. This system that controls engine performance interferes with the process of freeing your wheels.

To turn off: Push “VSC OFF” switch.

The “VSC OFF” indicator light will come on.

To turn on: Push “VSC OFF” switch once again.

The “VSC OFF” indicator light will go off.

When you turn the ignition switch on, this system always turns on.

“VSC OFF” indicator light comes on for a few seconds when the ignition key is turned to “ON”. It will come on again when you push the “VSC OFF” switch to turn off the system.

In the following cases, contact your Toyota dealer:

- The indicator light does not come on when the ignition key is turned “ON”.
- The indicator light remains on after the ignition is turned on.
- The indicator light comes on when the system is on while driving.

NOTICE
Make sure that the “VSC OFF” indicator light goes off before normal driving.

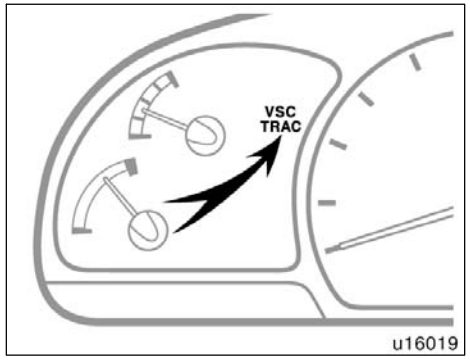

“VSC/TRAC” warning light

This light warns that there is a problem somewhere in the vehicle skid control system, traction control system (two−wheel drive models) or active traction control system (four−wheel drive models).

The light will come on when the ignition key is turned to “ON” and will go off after a few seconds.

If the light comes on while driving, the system does not work. However, as conventional braking operates when applied, there is no problem to continue your driving.

In the following cases, contact your Toyota dealer:

- The warning light does not come on after the ignition key is turned to “ON”.
- The warning light remains on after the ignition key is turned to “ON”.
- The warning light comes on while driving.

Parking brake

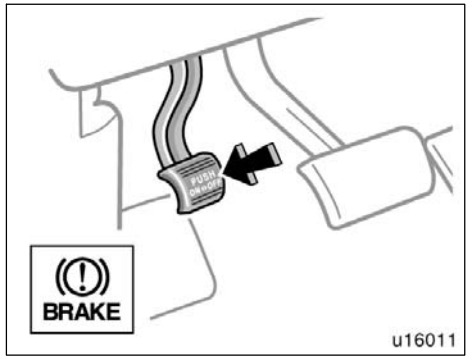

When parking, firmly apply the parking brake to avoid inadvertent creeping.

To set: Fully depress the parking brake pedal. For better holding power, first depress the brake pedal and hold it while setting the parking brake.
To release: Depress the parking brake pedal once again.

To remind you that the parking brake is set, the parking brake reminder light in the instrument panel remains on until you release the parking brake.

⚠ CAUTION

Before driving, be sure the parking brake is fully released and the parking brake reminder light is off.

Cruise control

The cruise control allows you to cruise the vehicle at a desired speed over 40 km/h (25 mph) even with your foot off the accelerator pedal.

Your cruising speed can be maintained up or down grades within the limits of engine performance, although a slight speed change may occur when driving up or down the grades. On steeper hills, a greater speed change will occur so it is better to drive without the cruise control.

⚠ CAUTION

- **To help maintain maximum control of your vehicle, do not use the cruise control when driving in heavy or varying traffic, or on slippery (rainy, icy or snow−covered) or winding roads.**
- **Avoid vehicle speed increases when driving downhill. If the vehicle speed is too fast in relation to the cruise control set speed, cancel the cruise control then downshift the transmission to use engine braking to slow down.**

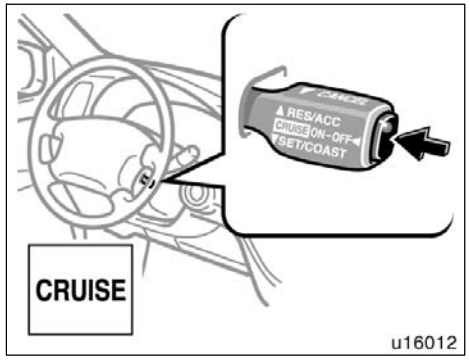

TURNING ON THE SYSTEM

To operate the cruise control, press the “CRUISE ON−OFF” button. This turns the system on. The indicator light in the instrument panel shows that you can now set the vehicle at a desired cruising speed. Another press will turn the system completely off.

⚠ CAUTION

To avoid accidental cruise control engagement, keep the “CRUISE ON−OFF” switch off when not using the cruise control.

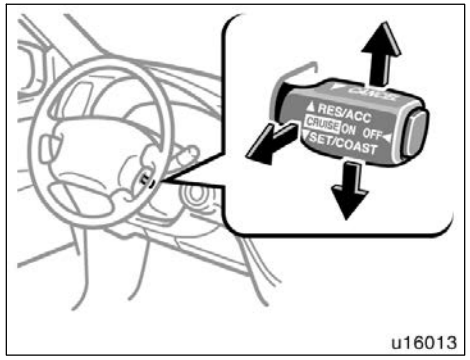

SETTING AT A DESIRED SPEED

The transmission must be in “D” before you set the cruise control speed.

Bring your vehicle to the desired speed, push the lever down in the “SET/COAST” direction and release it. This sets the vehicle at that speed. If the speed is not satisfactory, tap the lever up for a faster speed, or tap it down for a slower speed. Each tap changes the set speed by 1.6 km/h (1.0 mph). You can now take your foot off the accelerator pedal.

If you need acceleration—for example, when passing—depress the accelerator pedal enough for the vehicle to exceed the set speed. When you release it, the vehicle will return to the speed set prior to the acceleration.

CANCELLING THE PRESET SPEED

You can cancel the preset speed by:

a. Pulling the lever in the “CANCEL” direction and releasing it.

b. Depressing the brake pedal.

If the vehicle speed falls below about 40 km/h (25 mph), the preset speed will automatically cancel out.

If the vehicle speed drops 16 km/h (10 mph) below the preset speed, the preset speed will also automatically cancel out.

If the preset speed automatically cancels out other than for the above cases, have your vehicle checked by your Toyota dealer at the earliest opportunity.

RESETTING TO A FASTER SPEED

Push the lever up in the “RES/ACC” direction and hold it. Release the lever when the desired speed is attained. While the lever is held up, the vehicle will gradually gain speed.

However, a faster way to reset is to accelerate the vehicle and then push the lever down in the “SET/COAST” direction.

RESETTING TO A SLOWER SPEED

Push the lever down in the “SET/COAST” direction and hold it. Release the lever when the desired speed is attained. While the lever is held down, the vehicle speed will gradually decrease.

However, a faster way to reset is to depress the brake pedal and then push the lever down in the “SET/COAST” direction.

Even if you turn off the overdrive switch, with the cruise control on, engine braking will not be applied because the cruise control is not cancelled. To decrease the vehicle speed, reset to a slower speed with the cruise control lever or depress the brake pedal. If you use the brake pedal, cruise control is cancelled.

RESUMING THE PRESET SPEED

If the preset speed is cancelled by pulling the control lever or by depressing the brake pedal or clutch pedal, pushing the lever up in the “RES/ACC” direction will restore the speed set prior to cancellation.

However, once the vehicle speed falls below about 40 km/h (25 mph), the preset speed will not be resumed.

CRUISE CONTROL FAILURE WARNING

If the “CRUISE” indicator light in the instrument cluster flashes when using the cruise control, press the “CRUISE ON−OFF” button to turn the system off and then press it again to turn it on.

If any of the following conditions then occurs, there is some trouble in the cruise control system.

- The indicator light does not come on.
- The indicator light flashes again.
- The indicator light goes out after it comes on.

If this is the case, contact your Toyota dealer and have your vehicle inspected.

SECTION 1–7

OPERATION OF INSTRUMENTS AND CONTROLS

Car audio system

Reference 152
Using your audio system 152
Car audio system operating hints 166

Reference

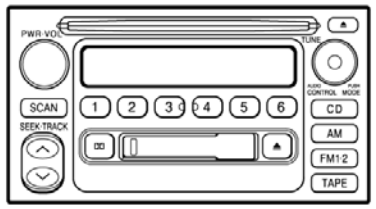

u17001

Type 1: AM·FM ETR radio/cassette player/ compact disc player (with compact disc auto changer controller)

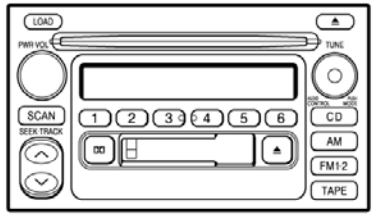

u17002

Type 2: AM·FM ETR radio/cassette player/ compact disc auto changer

Using your audio system——Some basics

This section describes some of the basic features on Toyota audio systems. Some information may not pertain to your system.

Your audio system works when the ignition key is in the “ACC” or “ON” position.

TURNING THE SYSTEM ON AND OFF

Push “PWR·VOL” to turn the audio system on and off.

Push “AM”, “FM1·2”, “TAPE” or “CD” to turn on that function without pushing “PWR·VOL”.

You can turn on each player by inserting a cassette tape or compact disc.

You can turn off each player by ejecting the cassette tape or compact disc. If the audio system was previously off, then the entire audio system will be turned off when you eject the cassette tape or compact disc. If the another function was previously playing, it will come on again.

SWITCHING BETWEEN FUNCTIONS

Push “AM”, “FM1·2”, “TAPE” or “CD” if the system is already on but you want to switch from one function to another.

TONE AND BALANCE

For details about your system's tone and balance controls, see the description of your own system.

Tone

How good an audio program sounds to you is largely determined by the mix of the treble, midrange, and bass levels. In fact, different kinds of music and vocal programs usually sound better with different mixes of treble, midrange, and bass.

Balance

A good balance of the left and right stereo channels and of the front and rear sound levels is also important.

Keep in mind that if you are listening to a stereo recording or broadcast, changing the right/left balance will increase the volume of one group of sounds while decreasing the volume of another.

YOUR RADIO ANTENNA

To lower a power antenna, turn off the audio system by pushing "PWR·VOL" or turn the ignition key to "LOCK".

The power antenna automatically retracts when the radio mode is switched off to turn on the cassette tape player.

NOTICE

- ***To prevent damage to the antenna, make sure it is retracted before driving your Toyota through an automatic car wash.***
- ***On models with glass antenna, attaching film (especially conductive or metallic type) on the rear glass will noticeably reduce the sensitivity of the radio.***

YOUR CASSETTE PLAYER

When you insert a cassette, the exposed tape should be to the right.

NOTICE

Do not oil any part of the player and do not insert anything other than cassette tapes into the slot, or the tape player may be damaged.

YOUR COMPACT DISC PLAYER

When you insert a disc, gently push it in with the label side up. (The player will automatically eject a disc if the label side is down.) The compact disc player will play from track 1 through the end of the disc. Then it will play from track 1 again.

NOTICE

Never try to disassemble or oil any part of the compact disc player. Do not insert anything except a compact disc into the slot.

The player is intended for use with 12 cm (4.7 in.) discs only.

—Controls and features

Type 1

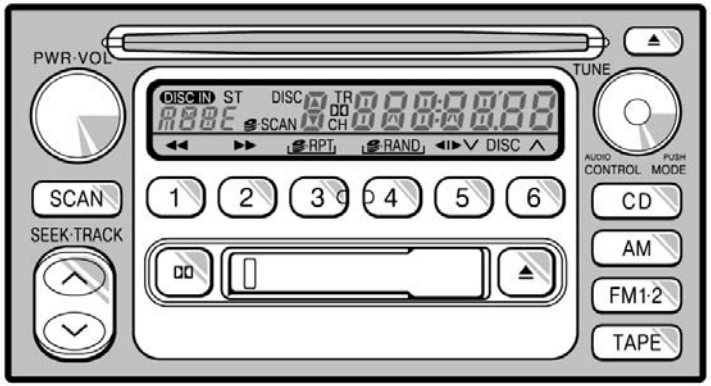

u17003

Details of specific buttons, controls, and features are described in the alphabetical listing that follows.

1 2 3 4 5 6 (Preset buttons)

These buttons are used to preset and tune in radio stations.

To preset a station to a button: Tune in the desired station (see “TUNE” knob or “SEEK” button). Push and hold down the button until you hear a beep—this will set the station to the button. The button number will appear on the display.

To tune in to a preset station: Push the button for the station you want. The button number and station frequency will appear on the display.

These systems can store one AM and two FM stations for each button (The display will show “AM”, “FM1” or “FM2” when you push “AM” “FM1·2”).

⏏ (Eject button)

Push the cassette tape eject button to eject a cassette. Push the compact disc eject button to eject a compact disc.

After you turn the ignition to “LOCK”, you will be able to eject a cassette or disc but you will not be able to reinsert it.

◀I▶ (Program)

Push “◀I▶” to select the other side of a cassette tape. The display indicates which side is currently selected (“▲” indicates top side, “▼” indicates bottom side).

Auto−reverse feature: After the cassette player reaches the end of a tape side, it automatically reverses and begins to play the other side. This is true whether the cassette was playing or fast forwarding.

◀◀/▶▶ (Reverse/Fast forward buttons)

Cassette Player

Push the fast forward button to fast forward a cassette tape. “FF” will appear on the display. Push the reverse button to rewind a tape. “REW” will appear on the display.

To stop the tape while it is fast forwarding, push the fast forward button or “TAPE”; to stop the tape while it is rewinding, push the reverse button or “TAPE”.

If a tape side rewinds completely, the cassette player will stop and then play that same side. If a tape fast forwards completely, the cassette player will play the other side of the tape, using the auto−reverse feature.

Compact Disc Player

If you want to fast forward or reverse through a compact disc track, push and hold in the fast forward or reverse button. When you release the button, the compact disc player will resume playing.

AM

Push “AM” to turn on the radio and select the AM band. “AM” will appear on the display.

If the audio system is off, you can turn on the radio by pushing “AM”. Also, push “AM” to switch from cassette or compact disc operation to radio operation.

CD (Compact Disc)

Push “CD” to switch from radio or cassette operation to compact disc operation. If the audio system is off, you can turn on the compact disc player by pushing “CD”. In both cases, a disc must already be loaded in the player.

When the audio is set into compact disc operation, the display shows the track or, track and disc number currently being played. Each time you push “CD”, the system changes to the automatic changer.

If the player malfunctions, your audio system will display one of the six following error messages.

If “WAIT” appears on the display, it indicates that the inside of the player unit may be too hot due to the very high ambient temperature. Remove the disc or magazine from the player and allow the player to cool down.

If “Err 1” appears on the display, it indicates the disc is dirty, damaged, or it was inserted up−side down. Clean the disc or insert it correctly.

If “Err 2” appears on the display, it indicates no disc is loaded inside the magazine. Insert a disc.

If “Err 3” or “Err 4” appears on the display, it indicates there is a trouble inside the system. Eject the disc or magazine. Set the disc or magazine again.

If “OPEn” appears on the display, it indicates the compact disc auto changer lid is open. Close the compact disc auto changer lid.

If the malfunction is not rectified, take your vehicle to your Toyota dealer.

CONTROL / MODE (Audio control and mode adjustment)

Manual tone adjustment function—

This knob is used to adjust the tone manually.

For low−pitch tone adjustment, push “CONTROL / MODE” repeatedly until “BAS” appears on the display. Then turn the knob to suit your preference.

The display will show the range from “BAS −5” to “BAS 5”.

For middle−pitch tone adjustment, push “CONTROL / MODE” repeatedly until “MId” appears on the display. Then turn the knob to suit your preference.

The display will show the range from “MId −5” to “MId 5”.

For high−pitch tone adjustment, push “CONTROL / MODE” repeatedly until “TRE” appears on the display. Then turn the knob to suit your preference.

The display will show the range from “TRE −5” to “TRE 5”.

Sound balance adjustment function—

This knob is also used to adjust the sound balance between the front and rear, and the right and left speakers.

For front/rear adjustment, push “CONTROL / MODE” repeatedly until “FAd” appears on the display. Then turn the knob to adjust the front/rear balance.

The display will show the range from “FAd−F7” to “FAd−R7”.

For left/right adjustment, push “CONTROL / MODE” repeatedly until “BAL” appears on the display. Then turn the knob to adjust the left/right balance.

The display will show the range from “BAL−L7” to “BAL−R7”.

DISC ◻ ◻

Compact disc auto changer only—

By using this button, you can select a disc you wish to listen to.

Push either side of the button until the number of the disc you want to listen to appears on the display.

Dolby™ DD B NR*

If you are listening to a tape that was recorded with Dolby™ B Noise Reduction, push the button marked with the double−D symbol. The double−D symbol will appear on the display. Push the button again to turn off Dolby™ B NR.

The Dolby NR mode reduces tape noise by about 10 dB. For best sound reproduction, play your tapes with this button on or off according to the mode used for recording the tape.

*: Dolby noise reduction manufactured under license from Dolby Laboratories Licensing Corporation. "DOLBY" and the double D symbol DD are trademarks of Dolby Laboratories Licensing Corporation.

FM1·2

Push "FM1·2" to turn on the radio and select the FM band. "FM1" or "FM2" will appear on the display. This system allows you to set twelve FM stations, two for each button.

If the audio system is off, you can turn on the radio by pushing "FM1·2". Also, push "FM1·2" to switch from cassette or compact disc operation to radio operation.

PWR·VOL (Power and Volume)

Push "PWR·VOL" to turn the audio system on and off. Turn "PWR·VOL" to adjust the volume.

RAND (Random)

There are two random features—you can either listen to the tracks on all the compact discs in the magazine in random order, or only listen to the tracks on a specific compact disc in random order.

To randomly play the tracks on a disc:
Quickly push and release "RAND". "RAND" will appear on the display. The disc you are listening to will play in random order. If you hear a beep, you held the button too long, and the player will play all the tracks in the magazine in random order. To turn off the random feature, push this button again.

Compact disc auto changer only—

To randomly play all the tracks in the magazine:
Push and hold "RAND" until you hear a beep. "RAND" will appear on the display and the player will perform all the tracks on all the discs in the magazine in random order. To turn off the random feature, push this button again.

RPT (Repeat)

Cassette Player

Push "RPT" while the track is playing. "RPT" will appear on the display. When the track ends, it will automatically be rewound and replayed. This process will be continued until you push the button again to turn off the repeat feature.

There must be at least 3 seconds of blank space between tracks in order for the repeat feature to work correctly.

Compact Disc Player

There are two repeat features—You can either replay a disc track or a whole compact disc.

Repeating a track:
Quickly push and release "RPT" while the track is playing. "RPT" will appear on the display. If you hear a beep, you held the button too long, and the player will repeat the whole disc. When the track ends, it will automatically be replayed. This process will be continued until you push the button again to turn off the repeat feature.

Compact disc auto changer only—

Repeating a disc:
Push and hold " RPT " until you hear a beep. " RPT " will appear on the display. The player will repeat all the tracks on the disc you are listening to. When the disc ends, the player will automatically go back to the top track of the disc and replay. This process will be continued until you push the button again to turn off the repeat feature.

SCAN

Radio

You can either scan all the frequencies on a band or scan only the preset stations for that band.

To scan the preset stations:
Push and hold "SCAN" until you hear a beep. The radio will tune in the next preset station up the band, stay there for 5 seconds, and then move to the next preset station. To select a station, push "SCAN" again.

To scan all the frequencies:
Quickly push and release "SCAN". If you hear a beep, you held the button too long, and the radio will scan the preset stations. The radio will find the next station up the station band, stay there for 5 seconds, and then scan again. To select a station, push "SCAN" again.

Compact disc player

There are two scan features—you can either scan the tracks on a specific disc or scan the first tracks of all the discs in the magazine.

Scanning the tracks on a disc:
Quickly push and release "SCAN". "SCAN" will appear on the display and the player will scan all the tracks on the disc you are listening to. If you hear a beep, you held the button too long, and the player will scan the first track of all the discs in the magazine. To select a track, push "SCAN" again. If the player scanned all the tracks on the disc, it will stop scanning.

Compact disc auto changer only—

Scanning the first track of all the discs in the magazine:
Push "SCAN" until you hear a beep. " ·SCAN" will appear on the display and the player will perform the first track of the next disc. To select a disc, push the "SCAN" again. If the player has scanned all the discs, it will stop scanning.

SEEK (Seeking)

Radio

In the seek mode, the radio finds and plays the next station up or down the station band.

To seek a station, quickly push and release the "□" or "□" under the "SEEK". Do this again to find another station.

Cassette Player

By using this button, you can skip up or down to a different track.

You can skip up to nine tracks at a time.

Push the up or down side of the button. "FF 1" or "REW 1" will appear on the display.

Next, push either side of the track button until the number on the display reaches the number of tracks you want to skip. If you push the button ten times, the skip feature will be turned off.

When counting the number of tracks you want to rewind, remember to count the current track as well. For example, if you want to rewind to a song that is two before the song you are listening to, push on the down side of the button until “REW 3” appears on the display.

If you have pushed the track button more than you wanted to, push the other side of the button. The track number will be reduced.

The track number you select is not valid if it is higher than the number of tracks remaining on the current cassette side.

- After the beginning of the tape is reached, the player will automatically start playing the same side.
- After the end of the tape is reached, the player will automatically reverse sides and start playing the other side.

There must be at least 3 seconds of blank space between tracks for the track button to work correctly. In addition, the feature may not work well with some spoken word, live, or classical recordings.

ST (Stereo reception) display

Your radio automatically changes to stereo reception when a stereo broadcast is received. “ST” appears on the display. If the signal becomes weak, the radio reduces the amount of channel separation to prevent the weak signal from creating noise. If the signal becomes extremely weak, the radio switches from stereo to mono reception.

TAPE

Push “TAPE” to switch from radio or compact disc operation to cassette operation. If the audio system is off, you can turn on the cassette player by pushing “TAPE”. In both cases, a cassette must already be loaded in the player.

TRACK (Track up/down button): Compact disc player

By using this button, you can skip up or down to a different track.

Push either side of the track button until the number of the track you want to listen to appears on the display. If you want to return to the beginning of the current track, push the down side of the button one time, quickly.

TUNE (Tuning)

Your Toyota has an electronic tuning radio (ETR). Turn the knob clockwise to step up the frequency. Turn the knob counterclockwise to step down the frequency.

Type 2

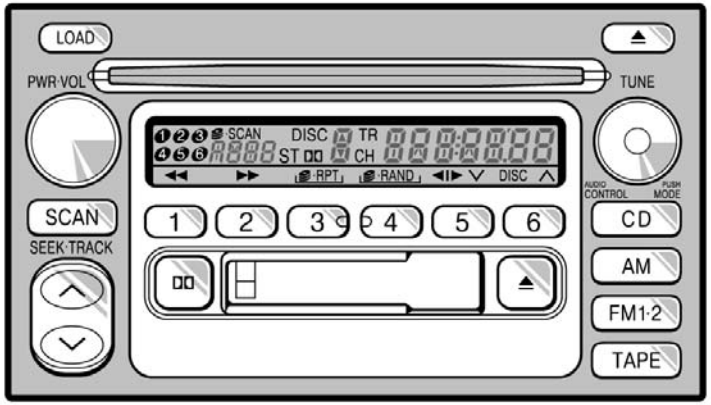

u17004

Details of specific buttons, controls, and features are described in the alphabetical listing that follows.

1 2 3 4 5 6 (Preset buttons)

These buttons are used to preset and tune in radio stations.

To preset a station to a button: Tune in the desired station (see “TUNE” knob or “SEEK” button). Push and hold down the button until you hear a beep—this will set the station to the button. The button number will appear on the display.

To tune in to a preset station: Push the button for the station you want. The button number and station frequency will appear on the display.

These systems can store one AM and two FM stations for each button (The display will show “AM”, “FM1” or “FM2” when you push “AM” “FM1·2”).

⏏ (Eject button)

Cassette tape

Push the cassette tape eject button to eject a cassette.

After you turn the ignition to “LOCK”, you will be able to eject a cassette, but you will not be able to reinsert it.

Compact disc

To eject one compact disc only: Push and release the compact disc eject button. If you hold the button too long (if the audio system is on at this time, you hear a beep.), the mechanism will change to the mode for ejecting all the discs loaded in the changer. You can also eject any specific one of the discs loaded in the changer as follows:

1. Push either side of the “DISC” button until the number of the disc you want to eject is displayed.
2. Push and release the compact disc eject button.

To eject all the discs loaded in the changer: Push and hold the compact disc eject button (until you hear a beep when the audio system is on). The last compact disc played before pushing the button will be ejected first. If a disc is left in the slot for a long time, the function to eject all the discs will be automatically cancelled.

After you turn the ignition to “LOCK”, you will be able to eject one compact disc only or all the discs loaded in the changer, but you will not be able to reinsert it or them.

◀❙▶ (Program)

Push “◀❙▶” to select the other side of a cassette tape. The display indicates which side is currently selected (“▲” indicates top side, “▼” indicates bottom side).

Auto−reverse feature: After the cassette player reaches the end of a tape side, it automatically reverses and begins to play the other side. This is true whether the cassette was playing or fast forwarding.

◀◀/▶▶ (Reverse/Fast forward buttons)

Cassette Player

Push the fast forward button to fast forward a cassette tape. “FF” will appear on the display. Push the reverse button to rewind a tape. “REW” will appear on the display.

To stop the tape while it is fast forwarding, push the fast forward button or “TAPE”; to stop the tape while it is rewinding, push the reverse button or “TAPE”.

If a tape side rewinds completely, the cassette player will stop and then play that same side. If a tape fast forwards completely, the cassette player will play the other side of the tape, using the auto−reverse feature.

Compact Disc Player

If you want to fast forward or reverse through a compact disc track, push and hold in the fast forward or reverse button. When you release the button, the compact disc player will resume playing.

AM

Push “AM” to turn on the radio and select the AM band. “AM” will appear on the display.

If the audio system is off, you can turn on the radio by pushing “AM”. Also, push “AM” to switch from cassette or compact disc operation to radio operation.

CD (Compact Disc)

Push “CD” to switch from radio or cassette operation to compact disc operation. If the audio system is off, you can turn on the compact disc player by pushing “CD”. In both cases, a disc must already be loaded in the player.

When the audio is set into compact disc operation, the display shows the track or, track and disc number currently being played.

If the player or another unit equipped with the player malfunctions, your audio system will display one of the six following error messages.

If “WAIT” appears on the display, it indicates that the inside of the player unit may be too hot due to the very high ambient temperature. Remove the disc or magazine from the player and allow the player to cool down.

If “Err 1” appears on the display, it indicates the disc is dirty, damaged, or it was inserted up−side down. Clean the disc or insert it correctly.

If “Err 2” appears on the display, it indicates no disc is loaded inside the magazine. Insert a disc.

If “Err 3” or “Err 4” appears on the display, it indicates there is a trouble inside the system. Eject the disc or magazine. Set the disc or magazine again.

If “OPEn” appears on the display, it indicates the compact disc auto changer lid is open. Close the compact disc auto changer lid.

If the malfunction is not rectified, take your vehicle to your Toyota dealer.

CONTROL / MODE (Audio control and mode adjustment)

Manual tone adjustment function—

This knob is used to adjust the tone manually.

For low−pitch tone adjustment, push “CONTROL / MODE” repeatedly until “BAS” appears on the display. Then turn the knob to suit your preference.

The display will show the range from “BAS −5” to “BAS 5”.

For middle−pitch tone adjustment, push “CONTROL / MODE” repeatedly until “MId” appears on the display. Then turn the knob to suit your preference.

The display will show the range from “MId −5” to “MId 5”.

For high−pitch tone adjustment, push “CONTROL / MODE” repeatedly until “TRE” appears on the display. Then turn the knob to suit your preference.

The display will show the range from “TRE −5” to “TRE 5”.

Sound balance adjustment function—

This knob is also used to adjust the sound balance between the front and rear, and the right and left speakers.

For front/rear adjustment, push “CONTROL / MODE” repeatedly until “FAd” appears on the display. Then turn the knob to adjust the front/rear balance.

The display will show the range from “FAd−F7” to “FAd−R7”.

For left/right adjustment, push “CONTROL / MODE” repeatedly until “BAL” appears on the display. Then turn the knob to adjust the left/right balance.

The display will show the range from “BAL−L7” to “BAL−R7”.

DISC

By using this button, you can select a disc you wish to listen to.

Push either side of the button until the number of the disc you want to listen to appears on the display.

Dolby™ B NR*

If you are listening to a tape that was recorded with Dolby™ B Noise Reduction, push the button marked with the double−D symbol. The double−D symbol will appear on the display. Push the button again to turn off Dolby™ B NR.

The Dolby NR mode reduces tape noise by about 10 dB. For best sound reproduction, play your tapes with this button on or off according to the mode used for recording the tape.

*: Dolby noise reduction manufactured under license from Dolby Laboratories Licensing Corporation. “DOLBY” and the double D symbol are trademarks of Dolby Laboratories Licensing Corporation.

FM1·2

Push “FM1·2” to turn on the radio and select the FM band. “FM1” or “FM2” will appear on the display. This system allows you to set twelve FM stations, two for each button.

If the audio system is off, you can turn on the radio by pushing “FM1·2”. Also, push “FM1·2” to switch from cassette or compact disc operation to radio operation.

LOAD

This button is used to load the compact discs in the compact disc auto changer which is integrated with the radio and cassette player. This compact disc auto changer can store up to 6 discs.

The key must be in the “ACC” or “ON” position.

Loading one compact disc only—

To load one compact disc only, quickly push and release the button. If you hold the button too long (if the audio system is on at this time, you hear a beep.), the mechanism will change to the mode for loading multiple compact discs. After pushing the button, insert a compact disc. At this time, the indicators on both sides of the slot are flashing. After the disc is loaded, the shutter of the slot will close and the indicators will stop flashing.

If no compact disc is inserted, the shutter will close after 15 seconds.

Loading multiple compact discs—

To load multiple compact discs, push and hold (until you hear a beep when the audio system is on). After pushing the button, insert the first compact disc. At this time, the indicators on both sides of the slot are flashing. After the disc is loaded, the shutter of the slot will close and the indicators will stop flashing. After a few seconds, the shutter will automatically open again so the next disc can be inserted. The same process can be applied for loading the rest of the discs.

If no compact disc is inserted, the shutter will close after 15 seconds.

PWR·VOL (Power and Volume)

Push "PWR·VOL" to turn the audio system on and off. Turn "PWR·VOL" to adjust the volume.

RAND (Random)

There are two random features—you can either listen to the tracks on all the compact discs in the magazine in random order, or only listen to the tracks on a specific compact disc in random order.

To randomly play the tracks on a disc:
Quickly push and release "RAND". "RAND" will appear on the display. The disc you are listening to will play in random order. If you hear a beep, you held the button too long, and the player will play all the tracks in the magazine in random order. To turn off the random feature, push this button again.

To randomly play all the tracks in the magazine:
Push and hold "RAND" until you hear a beep. "·RAND" will appear on the display and the player will perform all the tracks on all the discs in the magazine in random order. To turn off the random feature, push this button again.

RPT (Repeat)

Cassette Player

Push "RPT" while the track is playing. "RPT" will appear on the display. When the track ends, it will automatically be rewound and replayed. This process will be continued until you push the button again to turn off the repeat feature.

There must be at least 3 seconds of blank space between tracks in order for the repeat feature to work correctly.

Compact Disc Player

There are two repeat features—You can either replay a disc track or a whole compact disc.

Repeating a track:
Quickly push and release "RPT" while the track is playing. "RPT" will appear on the display. If you hear a beep, you held the button too long, and the player will repeat the whole disc. When the track ends, it will automatically be replayed. This process will be continued until you push the button again to turn off the repeat feature.

Repeating a disc:
Push and hold "RPT" until you hear a beep. "·RPT" will appear on the display. The player will repeat all the tracks on the disc you are listening to. When the disc ends, the player will automatically go back to the top track of the disc and replay. This process will be continued until you push the button again to turn off the repeat feature.

SCAN

Radio

You can either scan all the frequencies on a band or scan only the preset stations for that band.

To scan the preset stations:
Push and hold “SCAN” until you hear a beep. The radio will tune in the next preset station up the band, stay there for 5 seconds, and then move to the next preset station. To select a station, push “SCAN” again.

To scan all the frequencies:
Quickly push and release “SCAN”. If you hear a beep, you held the button too long, and the radio will scan the preset stations. The radio will find the next station up the station band, stay there for 5 seconds, and then scan again. To select a station, push “SCAN” again.

Compact disc player

There are two scan features—you can either scan the tracks on a specific disc or scan the first tracks of all the discs in the magazine.

Scanning the tracks on a disc:
Quickly push and release “SCAN”. “SCAN” will appear on the display and the player will scan all the tracks on the disc you are listening to. If you hear a beep, you held the button too long, and the player will scan the first track of all the discs in the magazine. To select a track, push “SCAN” again. If the player scanned all the tracks on the disc, it will stop scanning.

Scanning the first track of all the discs in the magazine:
Push “SCAN” until you hear a beep. “ ·SCAN” will appear on the display and the player will perform the first track of the next disc. To select a disc, push the “SCAN” again. If the player has scanned all the discs, it will stop scanning.

SEEK (Seeking)

Radio

In the seek mode, the radio finds and plays the next station up or down the station band.

To seek a station, quickly push and release the “◻” or “◻” under the “SEEK”. Do this again to find another station.

Cassette Player

By using this button, you can skip up or down to a different track.

You can skip up to nine tracks at a time.

Push the up or down side of the button. “FF 1” or “REW 1” will appear on the display.

Next, push either side of the track button until the number on the display reaches the number of tracks you want to skip. If you push the button ten times, the skip feature will be turned off.

When counting the number of tracks you want to rewind, remember to count the current track as well. For example, if you want to rewind to a song that is two before the song you are listening to, push on the down side of the button until “REW 3” appears on the display.

If you have pushed the track button more than you wanted to, push the other side of the button. The track number will be reduced.

The track number you select is not valid if it is higher than the number of tracks remaining on the current cassette side.

- After the beginning of the tape is reached, the player will automatically start playing the same side.
- After the end of the tape is reached, the player will automatically reverse sides and start playing the other side.

There must be at least 3 seconds of blank space between tracks for the track button to work correctly. In addition, the feature may not work well with some spoken word, live, or classical recordings.

ST (Stereo reception) display

Your radio automatically changes to stereo reception when a stereo broadcast is received. “ST” appears on the display. If the signal becomes weak, the radio reduces the amount of channel separation to prevent the weak signal from creating noise. If the signal becomes extremely weak, the radio switches from stereo to mono reception.

TAPE

Push “TAPE” to switch from radio or compact disc operation to cassette operation. If the audio system is off, you can turn on the cassette player by pushing “TAPE”. In both cases, a cassette must already be loaded in the player.

TRACK (Track up/down button): Compact disc player

By using this button, you can skip up or down to a different track.

Push either side of the track button until the number of the track you want to listen to appears on the display. If you want to return to the beginning of the current track, push the down side of the button one time, quickly.

TUNE (Tuning)

Your Toyota has an electronic tuning radio (ETR). Turn the knob clockwise to step up the frequency. Turn the knob counterclockwise to step down the frequency.

Car audio system operating hints

NOTICE

To ensure the correct audio system operation:

- ***Be careful not to spill beverages over the audio system.***
- ***Do not put anything other than a cassette tape or Compact Disc into the slot.***
- ***The use of cellular phone inside or near the vehicle may cause a noise from the speakers of the audio system which you are listening to. However, this does not indicate a malfunction.***

RADIO RECEPTION

Usually, a problem with radio reception does not mean there is a problem with your radio—it is just the normal result of conditions outside the vehicle.

For example, nearby buildings and terrain can interfere with FM reception. Power lines or telephone wires can interfere with AM signals. And of course, radio signals have a limited range. The farther you are from a station, the weaker its signal will be. In addition, reception conditions change constantly as your vehicle moves.

Here are some common reception problems that probably do not indicate a problem with your radio:

FM

Fading and drifting stations—Generally, the effective range of FM is about 40 km (25 miles). Once outside this range, you may notice fading and drifting, which increase with the distance from the radio transmitter. They are often accompanied by distortion.

Multi−path—FM signals are reflective, making it possible for two signals to reach your antenna at the same time. If this happens, the signals will cancel each other out, causing a momentary flutter or loss of reception.

Static and fluttering—These occur when signals are blocked by buildings, trees, or other large objects. Increasing the bass level may reduce static and fluttering.

Station swapping—If the FM signal you are listening to is interrupted or weakened, and there is another strong station nearby on the FM band, your radio may tune in the second station until the original signal can be picked up again.

AM

Fading—AM broadcasts are reflected by the upper atmosphere—especially at night. These reflected signals can interfere with those received directly from the radio station, causing the radio station to sound alternately strong and weak.

Station interference—When a reflected signal and a signal received directly from a radio station are very nearly the same frequency, they can interfere with each other, making it difficult to hear the broadcast.

Static—AM is easily affected by external sources of electrical noise, such as high tension power lines, lightening, or electrical motors. This results in static.

CARING FOR YOUR CASSETTE PLAYER AND TAPES

For the best performance for your cassette player and tapes:

Clean the tape head and other parts regularly.

- A dirty tape head or tape path can decrease sound quality and tangle your cassette tapes. The easiest way to clean them is by using a cleaning tape. (A wet type is recommended.)

Use high−quality cassettes.

- Low−quality cassette tapes can cause many problems, including poor sound, inconsistent playing speed, and constant auto−reversing. They can also get stuck or tangled in the cassette player.
- Do not use a cassette if it has been damaged or tangled or if its label is peeling off.
- Do not leave a cassette in the player if you are not listening to it, especially if it is hot outside.
- Store cassettes in their cases and out of direct sunlight.
- Avoid using cassettes with a total playing time longer than 100 minutes (50 minutes per side). The tape used in these cassettes is thin and could get stuck or tangled in the cassette player.

CARING FOR YOUR COMPACT DISC PLAYER AND DISCS

- Use only compact discs labeled as shown above. CD−R (CD−Recordable), CD−RW (CD−Re−writable) and personal computer use CD−ROMs may not be playable on your compact disc player.
- Your compact disc player is intended for use with 12 cm (4.7 in.) discs only.
- Extremely high temperatures can keep your compact disc player from working. On hot days, use the air conditioning to cool the vehicle interior before you listen to a disc.
- Bumpy roads or other vibrations may make your compact disc player skip.
- If moisture gets into your compact disc player, you may not hear any sound even though your compact disc player appears to be working. Remove the disc from the player and wait until it dries.

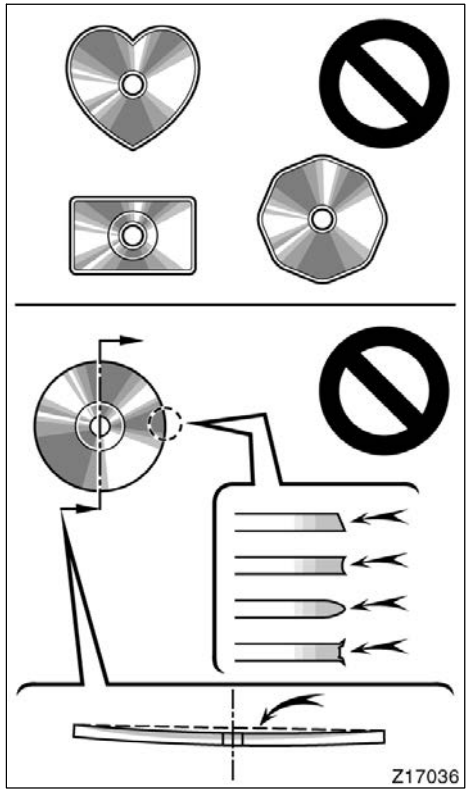

- Your compact disc player cannot play special shaped or low−quality compact discs such as those shown here. Do not use them as the player could be damaged.
- Handle compact discs carefully, especially when you are inserting them. Hold them on the edge and do not bend them. Avoid getting fingerprints on them, particularly on the shiny side.
- Dirt, scrapes, warping, pin holes, or other disc damage could cause the player to skip or to repeat a section of a track. (To see a pin hole, hold the disc up to the light.)
- Remove discs from the compact disc player when you are not listening to them. Store them in their plastic cases away from moisture, heat, and direct sunlight.

To clean a compact disc: Wipe it with a soft, lint−free cloth that has been dampened with water. Wipe in a straight line from the center to the edge of the disc (not in circles). Dry it with another soft, lint−free cloth. Do not use a conventional record cleaner or anti−static device.

CAUTION

Compact disc players use an invisible laser beam which could cause hazardous radiation exposure if directed outside the unit. Be sure to operate the player correctly.

SECTION 1–8

OPERATION OF INSTRUMENTS AND CONTROLS

Air conditioning system

Front air conditioning system
Controls 172
Air flow selector settings 176
Operating tips 176
Instrument panel vents 179
Rear air conditioning system
Controls 180
Air flow selector settings 182

Front air conditioning system——Controls

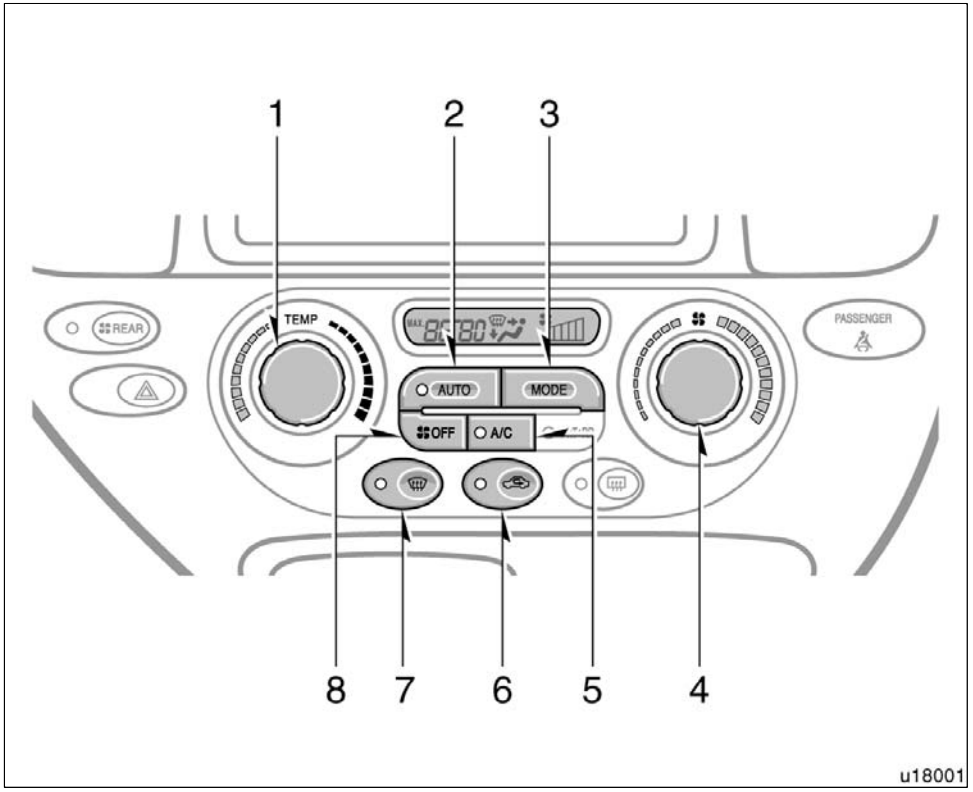

1. Temperature selector
2. “AUTO” button
3. “MODE” button (air flow selector)
4. Fan speed selector
5. “A/C” button
6. Air intake selector
7. Windshield air flow button
8. “OFF” button

“AUTO” button

For automatic operation of the air conditioning, press the “AUTO” button. An indicator light will illuminate to show that the automatic operation mode has been selected.

In the automatic operation mode, the air conditioning selects the most suitable fan speed and air flow, on−off of the air conditioning and air intake according to the temperature.

When you press the “AUTO” button with the air intake mode at FRESH, internal circulation may be applied for maximum cooling.

When you adjust the temperature selector to maximum cooling, a “MAX COLD” message will appear on the display and the air intake mode will be automatically changed to RECIRCULATE.

You may use manual controls if you want to select your own settings.

To turn off the automatic operation, press the “OFF” button.

Fan speed selector

Turn the knob to adjust the fan speed—to the right to increase, to the left to decrease.

In automatic operation, the fan speed is adjusted automatically unless you desire another fan speed mode.

Temperature selector

Turn the knob to adjust the temperature—to the right to warm, to the left to cool.

The temperature display changes between “°C” and “°F” when the unit of the outside temperature display is changed. (For details, see “Multi−information display” on page 184 in Section 1−9.)

“OFF” button

Push the button to turn off the air conditioning system.

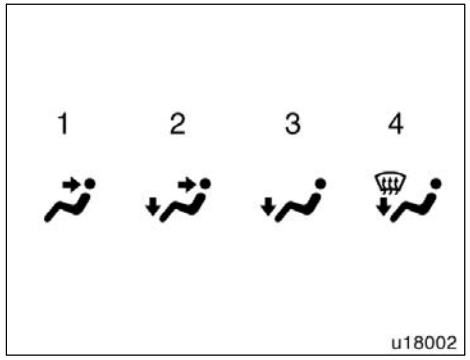

“MODE” button (air flow selector)

Press the button to select the vents used for air flow.

In automatic operation, the air flow mode is selected automatically among Panel, Bi−level and Floor unless you desire another air flow mode.

1. **Panel—**Air flows mainly from the instrument panel vents.

2. **Bi−level—**Air flows from both the floor vents and the instrument panel vents.

   When you set the temperature selector setting at about the middle in automatic operation, warm air flows out of the floor vents and relatively low−temperature air flows out of the center and side vents.

3. **Floor—**Air flows mainly from the floor vents.

   It is recommended that you close the lower vent. For details about this, see “Instrument panel vents” on page 179 in this section.

4. **Floor/Windshield—**Air flows mainly from the floor vents and windshield vents.

   Use with the air intake selector positioned in FRESH.

   It is recommended that you close the lower vent. For details about this, see “Instrument panel vents” on page 179 in this section.

For details about air flow selector settings, see “—Air flow selector settings” described below.

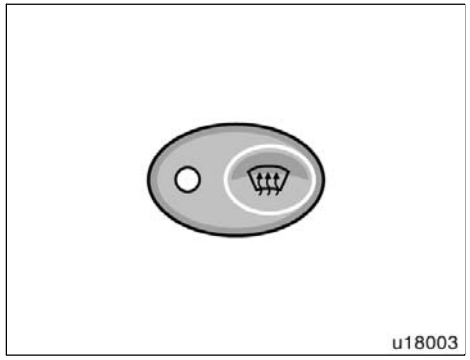

Windshield air flow button

When this button is pressed, air flows mainly from the windshield vents.

Pressing the button once again returns the air flow mode to the last one used.

This button allows the air intake to select FRESH automatically. This is to clean up the front view more quickly. If you want to return the setting to RECIRCULATE mode, press the air intake selector button once again.

Press the “A/C” button for dehumidified heating or cooling. This setting clears the front view more quickly.

It is recommended that you close the lower vent. For details about this, see “Instrument panel vents” on page 179 in this section.

For details about air flow selector settings, see “—Air flow selector settings” described below.

For further information for removing frost and fog, see “Instrument panel vents” on page 179 in this section.

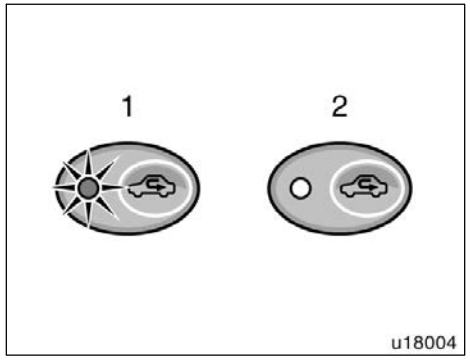

Air intake selector

Press the button to select the air source.

1. **Recirculate—**Recirculates the air inside the vehicle.
2. **Fresh—**Draws outside air into the system.

To prevent fogging up of the windshield, the air intake mode may change automatically to FRESH depending on the condition of the air conditioning system.

For example, when the ambient temperature is low, the air intake mode may change automatically to FRESH. This is not a malfunction.

“A/C” button

To turn on the air conditioning, press the “A/C” button. The “A/C” button indicator will come on. To turn the air conditioning off, press the button again.

If the “A/C” button indicator flashes, there is a problem in the air conditioning system and the air conditioning automatically shuts off. If this happens, take your vehicle to a Toyota dealer for service.

—Air flow selector settings

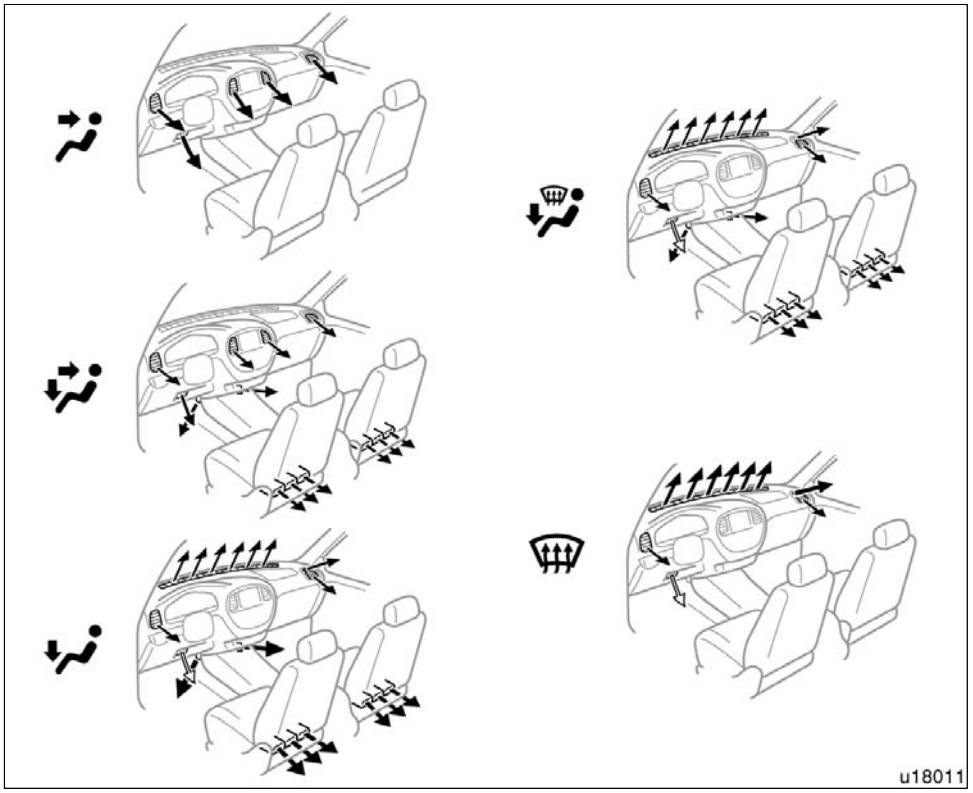

⇨ : See “Instrument panel vents” on page 179 in this section.

—Operating tips

- To cool off your Toyota after it has been parked in the hot sun, drive with the windows open for a few minutes. This vents the hot air, allowing the air conditioning to cool the interior more quickly.
- Make sure the air intake grilles in front of the windshield are not blocked (by leaves or snow, for example).
- On humid days, do not blow cold air on the windshield. The windshield could fog up because of the difference in air temperature on the inside and outside of the windshield.
- Keep the area under the front seats clear to allow air to circulate throughout the vehicle.
- On cold days, set the fan speed to high for a minute to help clear the intake ducts of snow or moisture. This can reduce the amount of fogging on the windows.
- When driving on dusty roads, close all windows. If dust thrown up by the vehicle is still drawn into the vehicle after closing the windows, it is recommended that the air intake selector be set to FRESH and the fan speed selector to any setting except “OFF”.

à If following another vehicle on a dusty road, or driving in windy and dusty conditions, it is recommended that the air intake selector be temporarily set to RECIRCULATE, which will close off the outside passage and prevent outside air and dust from entering the vehicle interior.

Heating

For best results, set controls to:

—For automatic operation

Press in the "AUTO" button.
Temperature—To the desired temperature
Air conditioning—OFF

—For manual operation

Fan speed—To the desired fan speed
Temperature—Towards **WARM** (to the right)
Air intake—FRESH (outside air)
Air flow—FLOOR
Lower vent—CLOSED
Air conditioning—OFF

à For quick heating, select recirculated air for a few minutes. To keep the windows from fogging, select fresh after the vehicle interior has been warmed.

à Press the "A/C" button on for dehumidified heating.

à Choose floor/windshield air flow to heat the vehicle interior while defrosting or defogging the windshield.

Air conditioning

For best results, set controls to:

—For automatic operation

Press in the "AUTO" button.
Temperature—To the desired temperature
Air conditioning—ON

—For manual operation

Fan speed—To the desired fan speed
Temperature—Towards **COLD** (to the left)
Air intake—FRESH (outside air)
Air flow—PANEL
Air conditioning—ON

à For quick cooling, select recirculated air for a few minutes.

Ventilation

For best results, set controls to:

—For automatic operation

Press in the "AUTO" button.
Temperature—Towards **COLD** (to the left)
Air conditioning—OFF

—For manual operation

Fan speed—To the desired fan speed
Temperature—Towards **COLD** (to the left)
Air intake—FRESH (outside air)
Air flow—PANEL
Air conditioning—OFF

Defogging and defrosting

The inside of the windshield

For best results, set controls to:

—For automatic operation

Temperature—Towards **WARM** (to the right) to heat; **COLD** (to the left) to cool
Air intake—FRESH (outside air)
Air flow—WINDSHIELD
Lower vent—CLOSED

—For manual operation

Fan speed—To the desired fan speed
Temperature—Towards **WARM** (to the right) to heat; **COLD** (to the left) to cool
Air intake—FRESH (outside air)
Air flow—WINDSHIELD
Lower vent—CLOSED

Pressing the windshield air flow button turns on the defogging function with the purpose of clearing the front view.

When pressing the windshield air flow button, the air intake selects FRESH automatically. This is to clean up the front view more quickly.

If you want to return the setting to RECIRCULATE mode, press the air intake selector button once again.

Press the "A/C" button for dehumidified heating or cooling. This setting clears the front view more quickly.

- On humid days, do not blow cold air on the windshield—the difference between the outside and inside temperatures could make the fogging worse.

The outside of the windshield

For best results, set controls to:

—For automatic operation

Temperature—Towards **WARM** (to the right)
Air intake—FRESH (outside air)
Air flow—WINDSHIELD
Lower vent—CLOSED

—For manual operation

Fan speed—To the desired fan speed
Temperature—Towards **WARM** (to the right)
Air intake—FRESH (outside air)
Air flow—WINDSHIELD
Lower vent—CLOSED

Pressing the windshield air flow button turns on the defrosting function with the purpose of clearing the front view.

When pressing the windshield air flow button, the air intake selects FRESH automatically. This is to clean up the front view more quickly.

If you want to return the setting to RECIRCULATE mode, press the air intake selector button once again.

Press the “A/C” button for dehumidified heating or cooling. This setting clears the front view more quickly.

à To heat the vehicle interior while defrosting the windshield, choose floor/windshield air flow.

Instrument panel vents

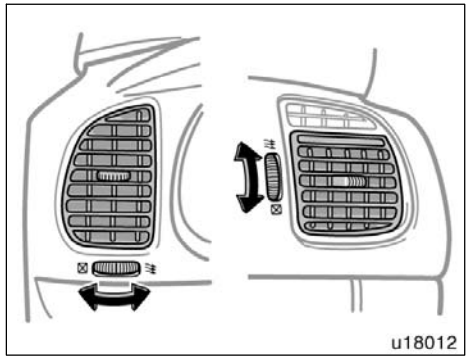

Side vents

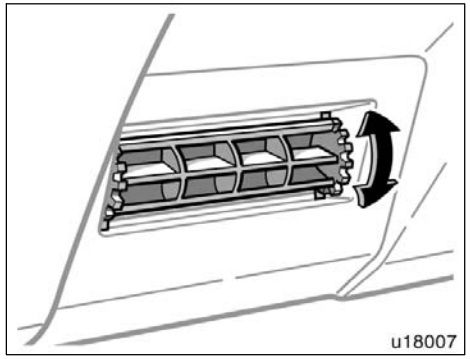

Lower vent

If air flow control is not satisfactory, check the instrument panel vents. The instrument panel vents may be opened or closed as shown.

For removing frost or fog, it is recommended that you close the lower vent when you push the windshield air flow button or using the “Floor” or the “Floor/windshield” mode.

Rear air conditioning system —Controls

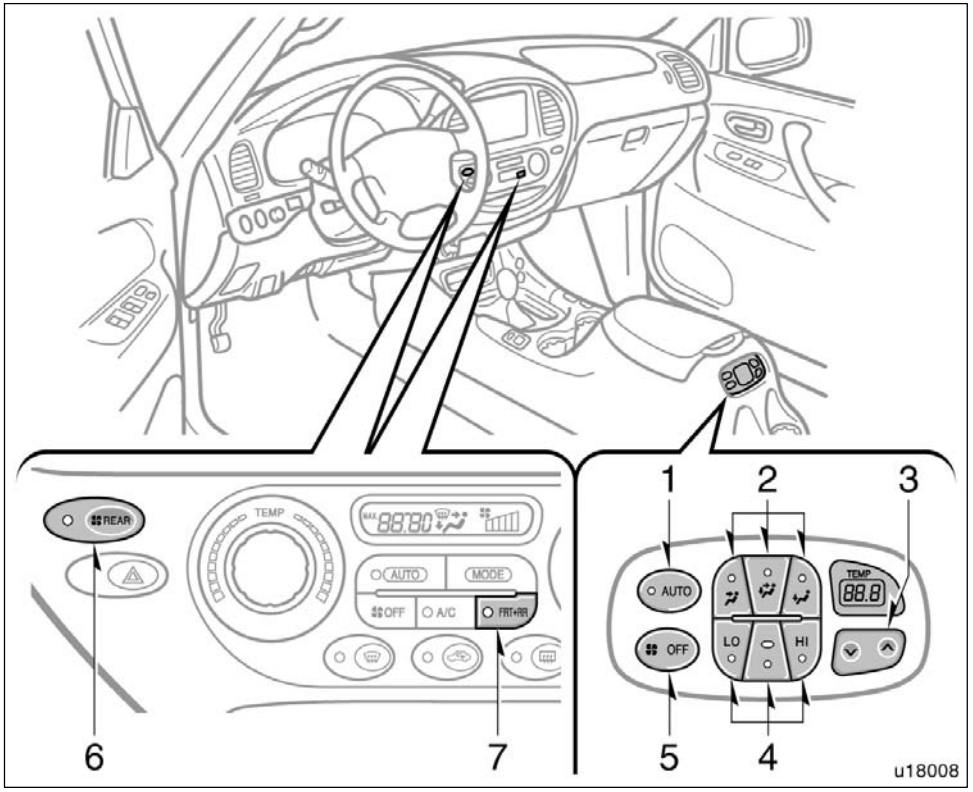

1. “AUTO” button
2. Air flow selector buttons
3. Temperature selector
4. Fan speed selector buttons
5. “OFF” button
6. “REAR” button
7. “FRT+RR” button

“AUTO” button

For automatic operation of the rear air conditioning, press the “AUTO” button. An indicator light will illuminate to show that the automatic operation mode has been selected.

In the automatic operation mode, the air conditioning selects the most suitable fan speed and air flow according to the temperature.

You may use manual controls if you want to select your own settings.

To turn off the automatic operation, press the “OFF” button.

Fan speed selector

Select the mode button you desire to adjust the fan speed and push it.

In automatic operation, the fan speed is adjusted automatically unless you desire another fan speed mode.

Temperature selector

To increase the temperature, press the “◻” side, to decrease it, press the “◻” side.

The temperature display changes between “°C” and “°F” when the unit of the outside temperature display is changed. (For details, see “Multi−information display” on page 184 in Section 1−9.)

“REAR” button

You can turn on or off the rear air conditioning system by pushing the button.

“FRT+RR” button

You can cancel the operations from the rear control panel by pushing this button.

While the operation from the rear control panel are stopped, the front and rear air conditioning systems can be set simultaneously from the front control panel.

“OFF” button

Push the “OFF” button to turn off the air conditioning system.

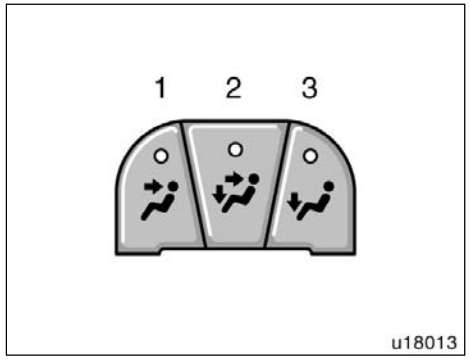

Air flow selector

Push the button to select the vents used for air flow.

1. **Panel—**Air flows mainly from the roof panel vents.
2. **Bi−level—**Air flows from both the roof panel vents and floor vents.
3. **Floor—**Air flows mainly from the floor vents.

—Air flow selector settings

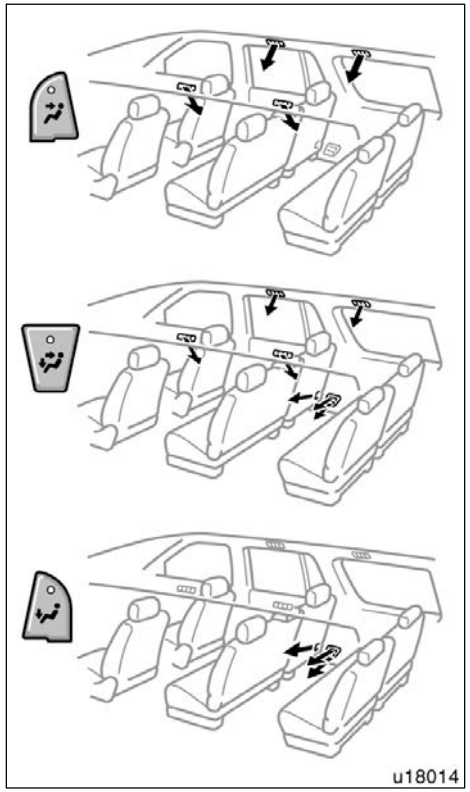

SECTION 1–9

OPERATION OF INSTRUMENTS AND CONTROLS

Other equipment

Multi−information display 184
Clock 195
Cigarette lighter and ashtrays 195
Power outlets 196
Glove box 197
Garage door opener box 197
Auxiliary boxes 200
Rear console box 202
Note pad holder 203
Coin holder 203
Compact disc and cassette tape holder 205
Cup holders 205
Tie−down hooks 206
Grocery bag hooks 207
Cargo net hooks 207
Roof luggage carrier 207
Floor mat 208

Multi−information display—

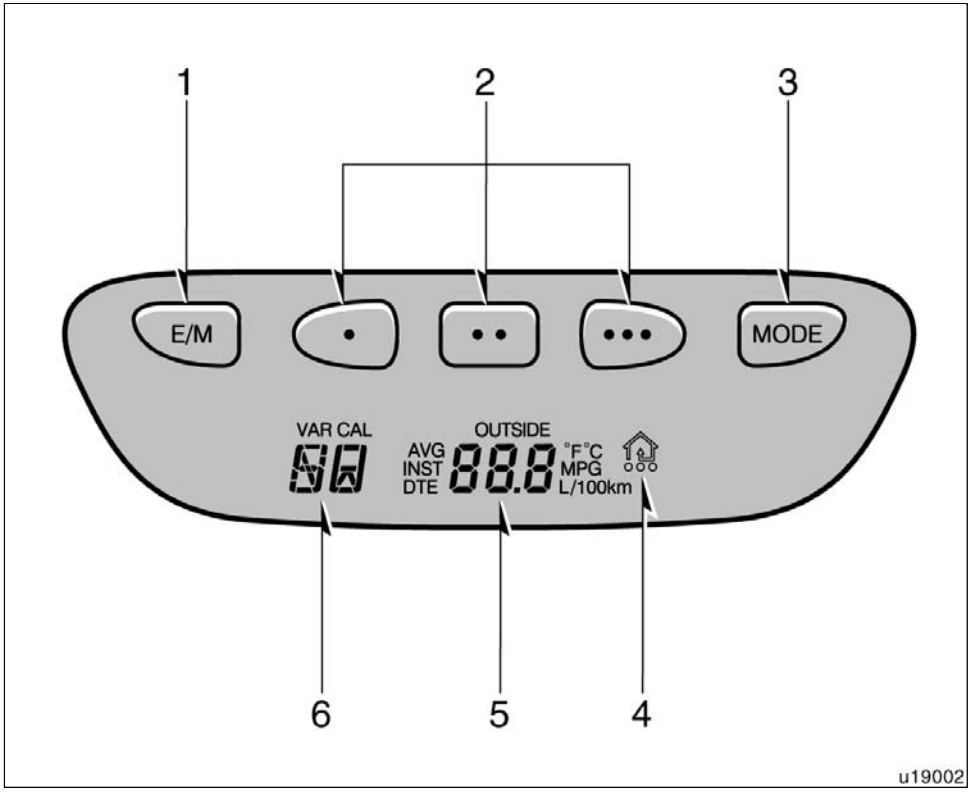

1. “E/M” button
2. Garage door opener buttons
3. “MODE” button
4. Garage door opener indicator
5. Outside temperature and cruise information display
6. Compass

—Before using the multi−information display

Operate the multi−information display with the ignition switch on.

When the ignition switch is turned to “ON”, the last previously used mode displayed just before the ignition switch is turned off will appear.

When the instrument panel lights are turned on, the brightness of the display will be reduced.

“E/M” button

This button is used to switch between English/U.S. Customary System and metric units.

Each time you push this button, the display switches. This is also linked to the multi−information display and the front and rear air conditioning displays. The display variations are as follows;

Indication	Outside temperature	Instantaneous fuel consumption/ Average fuel consumption	Distance to empty
English/U.S. Customary System (E)	°F	MPG	MI
Metric (M)	°C	L/100 km	km

The initial mode will be English/U.S. Customary System units, however, if the unit is switched to metric and power is off, it will display metric units on power−up.

"MODE" button

This button is used to select the item.

Every time you push the "MODE" button, the display toggles.

For more details, see "—Outside temperature and cruise information display" on page 189 in this section.

⚠ CAUTION

Do not adjust the display while the vehicle is moving. Be sure to adjust the display only when the vehicle is stopped.

—Garage door opener

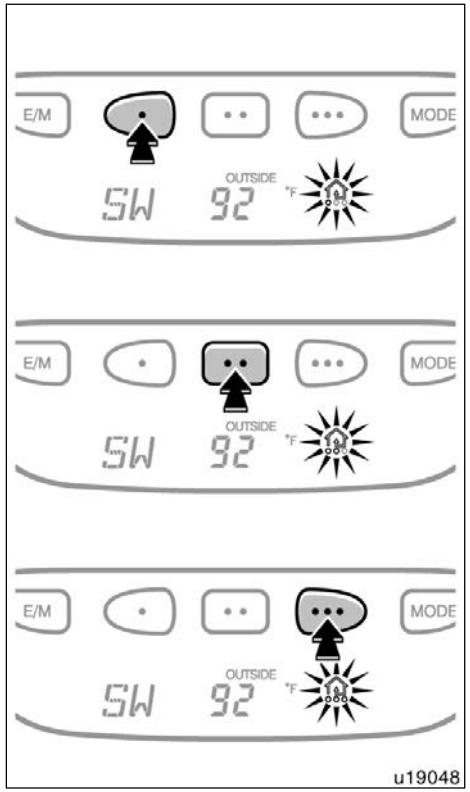

The garage door opener (HomeLink® Universal Transceiver) is manufactured under license from HomeLink® and can be programmed to operate garage doors, gates, entry doors, door locks, home lighting systems, and security systems, etc.

(a) Programming the HomeLink®

The HomeLink® in your vehicle has 3 buttons and you can store one program for each button.

To ensure correct programming into the HomeLink®, install a new battery in the hand−held transmitter prior to programming.

The battery side of the hand−held transmitter must be pointed away from the HomeLink® during the programming process.

For Canadian users, follow the procedure in "Programming an entrance gate/Programming all devices in the Canadian market".

1. Decide which of 3 HomeLink® buttons you want to program. Push and hold down one of the buttons until the indicator corresponding to the selected channel begins to flash.

2. Place your hand−held garage transmitter 25 to 75 mm (1 to 3 in.) away from the surface of the HomeLink®.

Keep the indicator light on the HomeLink® in view while programming.

3. Simultaneously press and hold the hand−held garage transmitter button along with the selected HomeLink® button.
4. When the indicator light on the HomeLink® changes from a slow to a rapid flash after 20 seconds, you can release both buttons.
5. Test the operation of the HomeLink® by pressing the newly programmed button. If programming a garage door opener, check to see if the garage door opens and closes.

If the garage door does not operate, identify if your garage transmitter is of the “Rolling Code” type. Press and hold the programmed HomeLink® button. The garage door has the rolling code feature if the indicator light (on the HomeLink®) flashes rapidly and then remains lit after 2 seconds. If your garage transmitter is the “Rolling Code” type, proceed to the heading “Programming a rolling code system”.

6. Repeat steps 2 through 5 for each remaining HomeLink® button to program another device.

Programming a rolling code system

If your device is “Rolling Code” equipped, it is necessary to follow steps 1 through 4 under the heading “Programming the HomeLink®” before proceeding with the steps listed below.

1. Locate the “training” button on the ceiling mounted garage door opener motor. The exact location and color of the button may vary by brand of garage door opener. Refer to the owner’s guide supplied by the garage door opener manufacturer for the location of this “training” button.
2. Press the “training” button on the ceiling mounted garage door opener motor.

Following this step, you have 30 seconds in which to initiate step 3 below.

3. Press and release the vehicle’s programmed HomeLink® button twice. The garage door may open. If the door does open, the programming process is complete. If the door does not open, press and release the button a third time. This third press and release will complete the programming process by opening the garage door.

The ceiling mounted garage door opener motor should now recognize the HomeLink® unit and be able activate the garage door up/down.

4. Repeat steps 1 through 3 for each remaining HomeLink® button to program another rolling code system.

Programming an entrance gate/Programming all devices in the Canadian market

1. Decide which of the 3 HomeLink® buttons you want to program.
2. Place your hand−held gate/device transmitter 25 to 75 mm (1 to 3 in.) away from the surface of the HomeLink®.

Keep the indicator light on the HomeLink® in view while programming.

3. Press and hold the selected HomeLink® button.
4. Continuously press and release (cycle) the hand−held gate/device transmitter button every two seconds until step 5 is complete.
5. When the indicator light on the HomeLink® changes from a slow to a rapid flash after 20 seconds, you can release both buttons.

6. Test the operation of the HomeLink® by pressing the newly programmed button. Check to see if the gate/device operates correctly.
7. Repeat steps 1 through 6 for each remaining HomeLink® button to program another device.

Programming other devices

To program other devices such as home security systems, home door locks or lighting, contact your authorized Toyota dealer for assistance.

Reprogramming a button

Individual HomeLink® buttons cannot be erased, however, to reprogram a single button, follow the procedure "Programming the HomeLink®".

(b) Operating the HomeLink®

To operate the HomeLink®, press the appropriate HomeLink® button to activate the programmed device. The HomeLink® indicator light should come on. The HomeLink® continues to send the signal for up to 20 seconds as long as the button is pressed.

(c) Erasing the entire HomeLink® memory (all three programs)

To erase all previously programmed codes at one time, press and hold down the 2 outside buttons for 20 seconds until the indicator light flashes.

If you sell your vehicle, be sure to erase the programs stored in the HomeLink® memory.

⚠ CAUTION

- **When programming the HomeLink® Universal Transceiver, you may be operating a garage door or other device. Make sure people and objects are out of the way of the garage door or other device to prevent potential harm or damage.**
- **Do not use this HomeLink® Universal Transceiver with any garage door opener that lacks the safety stop and reverse feature as required by federal safety standards. (This includes any garage door opener model manufactured before April 1, 1982.) A garage door opener, which cannot detect an object, signaling the door to stop and reverse, does not meet current federal safety standards. Using a garage door opener without these features increases risk of serious injury or death.**

This device complies with Part 15 of the FCC Rules and with RSS−210 of the Industry Canada. Operation is subject to the following two conditions: (1) This device may not cause harmful interference, and (2) this device must accept any interference received, including interference that may cause undersired operation.

WARNING: This transmitter has been tested and complies with FCC and Industry Canada DOC/MPAC rules. Changes or modifications not expressly approved by the party responsible for compliance could void the user's authority to operate the device.

—Outside temperature and cruise information display

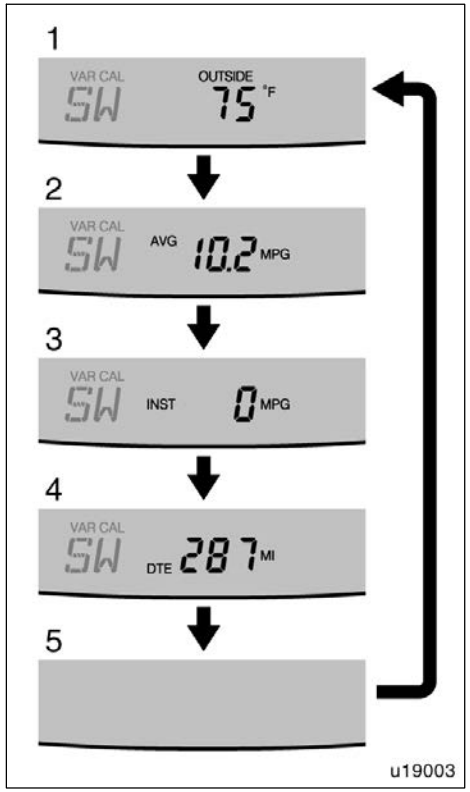

The outside temperature and cruise information display indicates the following information.

1. Outside temperature
2. Average fuel consumption
3. Instantaneous fuel consumption
4. Distance to empty
5. Display off (no compass)

Every time you push the "MODE" button, the display toggles through this information.

During the off mode, the compass display is also turned off.

The displayed values in the cruise information display indicate general driving conditions. Accuracy varies with driving habits and road conditions.

To set the unit, push the "E/M" button until the desired unit display appears. (At this time, front and rear air conditioning displays also change.)

1. Outside temperature

The outside temperature display indicates the outside air temperature.

The displayed value is updated every 1 second.

The displayed temperature ranges from −30°C (−22°F) up to 50°C (122°F).

If there is some abnormality in the connection of the outside air temperature sensor, "−−°C" ("−−°F") will appear on the display. If "−−°C" ("−−°F") appears on the display, contact your Toyota dealer.

There may be a case that "−−°C" ("−−°F") appears momentarily when the ignition is quickly turned to "ON". It is normal if it goes out soon.

2. Average fuel consumption ("AVG")

Average fuel consumption is calculated and displayed based on total driving distance and total fuel consumption with the engine running.

The displayed value is updated every 1 seconds.

To reset the calculations, return the mode to "AVG" and push and hold the "MODE" and "E/M" button simultaneously for 2 seconds.

3. Instantaneous fuel consumption ("INST")

The instantaneous fuel consumption is calculated and displayed based on distance and fuel consumption for 1 seconds with the engine running.

The displayed value is updated every 1 seconds.

Note that an accurate figure may not be shown in the following cases.

- When the vehicle is stopped with the engine running, the display will indicate the extremely high fuel consumption.
- When the vehicle is driving down a long slope, applying the engine brake, the display will indicate the extremely low fuel consumption.

The calculation is reset when the ignition switch is turned off.

4. Distance to empty ("DTE")

The distance the vehicle can travel with the remaining fuel is calculated and displayed based on the quantity of remaining fuel and past fuel consumption.

The displayed value is updated every 1 second.

Every time you refuel the vehicle, the calculation is reset.

The actual driving range varies with driving habits and road conditions. If fuel consumption is good, the driving range will be longer. If fuel consumption is poor, the driving range will be shorter.

—Compass

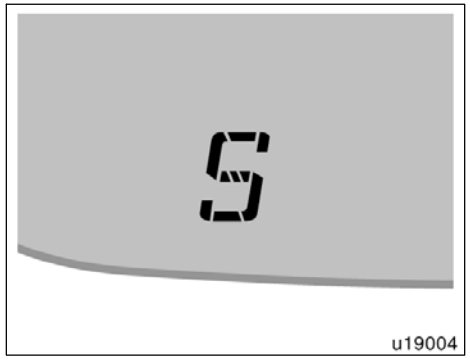

The compass indicates the direction that the vehicle is heading. In the above case, it shows that the vehicle is heading south.

The direction display is updated every 2 seconds.

Displays	Directions
N	North
NE	Northeast
E	East
SE	Southeast
S	South
SW	Southwest
W	West
NW	Northwest

The compass may not show the correct direction in the following conditions:

- The vehicle is stopped immediately after turning.

  The compass does not adjust while the vehicle is stopped.
- The ignition switch is turned off immediately after turning.
- The vehicle is on an inclined surface.
- The vehicle is in a place where the earth's magnetic field is subject to interference by artificial magnetic fields (underground parking, under a steel tower, between buildings, roof parking, near a crossing, near a large vehicle, etc.).
- The vehicle is magnetized. (There is a magnet or a metal object on or near the roof.)
- The battery has been disconnected.

The compass works to calibrate the direction automatically while the vehicle is in motion, if deviation is small.

For additional precision or for complete calibrating, see "CALIBRATING THE COMPASS" below.

If the direction is not indicated or the system does not operate properly, contact your Toyota dealer.

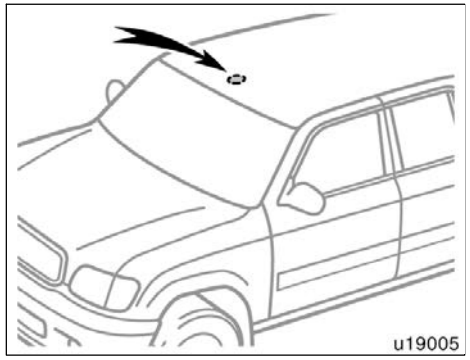

Compass sensor

The compass sensor is on the roof of the vehicle.

NOTICE
Do not put magnets or a metal object on or near the roof of the vehicle. Doing this may cause malfunction of the compass sensor.

CALIBRATING THE COMPASS (deviation calibration)

The direction display on the compass deviates from the true direction determined by the earth's magnetic field. The angle of deviation varies according to the geographic position of the vehicle.

To adjust for this deviation;

1. Stop the vehicle in a level place and switch the display to the outside temperature. (To switch to this mode, see "—Outside temperature and cruise information display" on page 189 in this section.)
2. Push and hold both the "MODE" and "E/M" buttons simultaneously for 5 seconds until the "VAR" indication appears on the compass display.
3. Push the "E/M" button several times until the desired zone number appears on the compass display.

If the button is not pushed for 10 seconds, the display returns to the compass/outside temperature mode and the number that is last set is memorized.

To select the zone where the vehicle is currently located, refer to the following map.

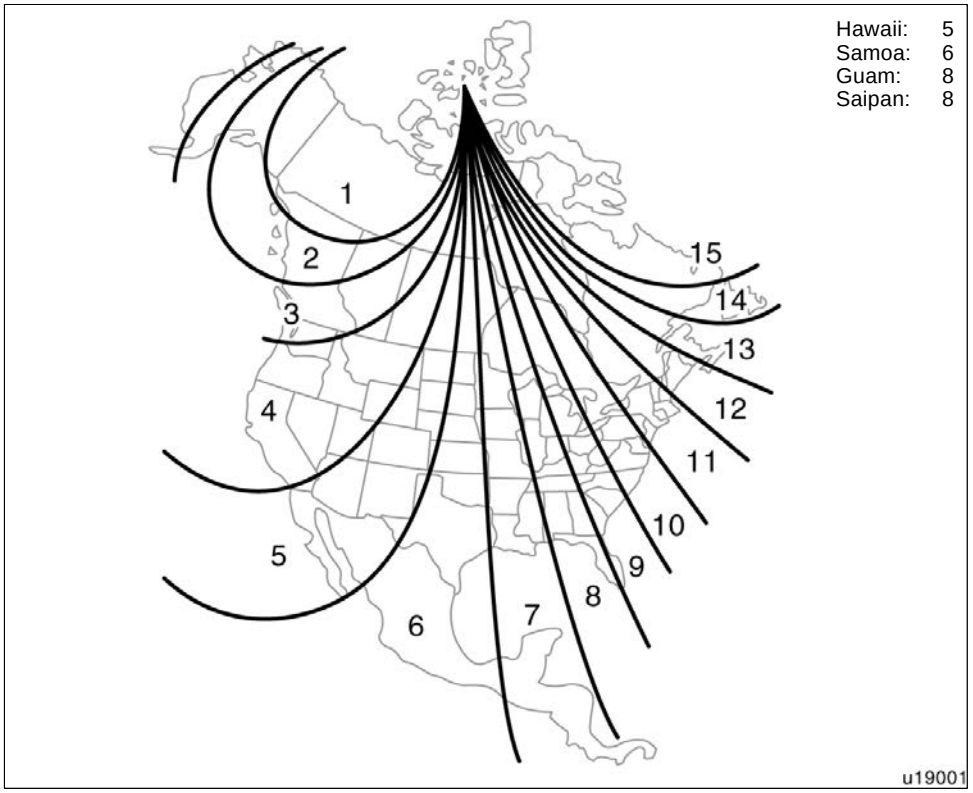

Zone number

After calibration, leaving the system for several seconds returns to the compass mode.

⚠ CAUTION

Do not adjust the display while the vehicle is moving. Be sure to adjust the display only when the vehicle is stopped.

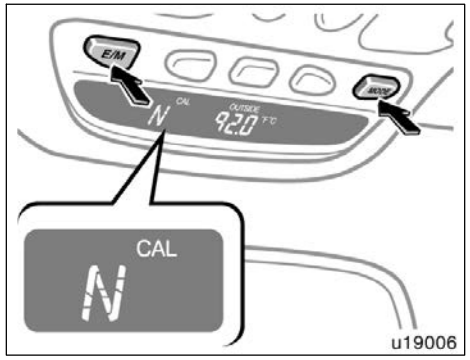

CALIBRATING THE COMPASS (circling calibration)

Sometimes the direction display on the compass may not change after a turn. In this case, the compass needs to be calibrated.

To calibrate the compass manually, do the following;

1. Stop the vehicle in a level place and switch the display to the outside temperature. (To switch to this mode, see "—Outside temperature and cruise information display" on page 189 in this section.)
2. Push and hold both the "MODE" and "E/M" buttons simultaneously for 10 seconds until the "CAL" indication appears on the compass display. (At this time, the compass display is locked in "N".)

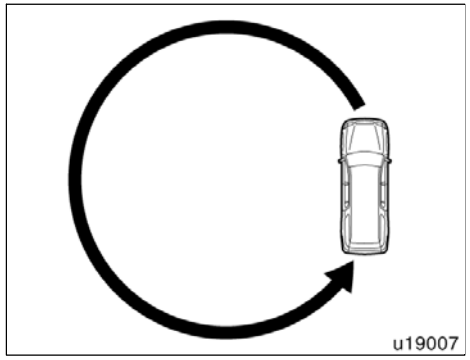

3. Drive the vehicle in a circle at 8 km/h (5 mph) or less. If there is not enough space to drive in a circle, drive around the block.

When the "CAL" indication goes off and the compass returns to the normal mode, calibration is complete.

If you want to restart the calibration before it is complete, push both of the "MODE" and "E/M" buttons simultaneously for 10 seconds again.

Perform circling calibration just after you have purchased your Toyota. And then always perform circling calibration after the battery has been removed, replaced or disconnected.

- Do not perform circling calibration of the compass in a place where the earth's magnetic field is subject to interference by artificial magnetic fields (underground parking, under a steel tower, between buildings, roof parking, near a crossing, near a large vehicle, etc.).
- During calibration, do not operate electric systems (moon roof, power windows, etc.) as they may interfere with the calibration.

⚠ CAUTION

- **When doing the circling calibration, be sure to secure a wide space, and pay attention to people and vehicles in the neighborhood. Do not violate any local traffic rules while performing circling calibration.**
- **Do not adjust the display while the vehicle is moving. Be sure to adjust the display only when the vehicle is stopped.**

Clock

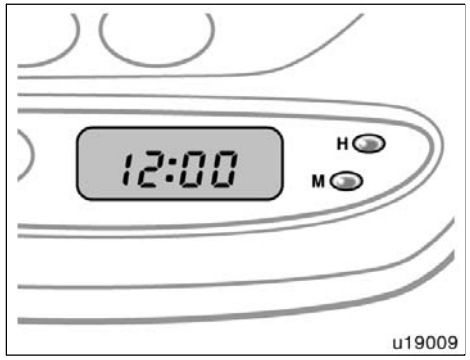

The digital clock indicates the time.

The key must be in the "ACC" or "ON" position.

To reset the hour: Push the "H" button.
To reset the minutes: Push the "M" button.

If the electrical power source has been disconnected from the clock, the time display will automatically be set to 1:00 (one o'clock).

When the instrument panel lights are turned on, the brightness of the time indication will be reduced.

Cigarette lighter and ashtrays

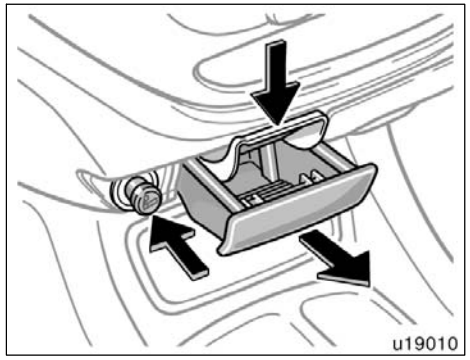

Cigarette lighter and front ashtray

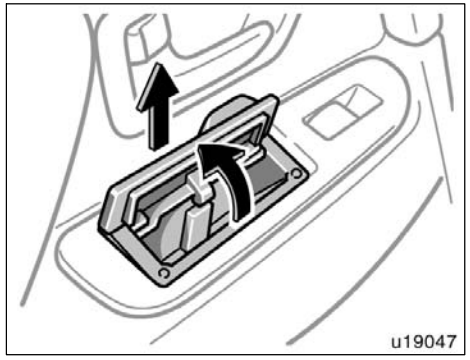

Rear ashtray

CIGARETTE LIGHTER

To use the cigarette lighter, press it in. When it becomes heated, it automatically pops out ready for use.

If the engine is not running, the key must be in the “ACC” position.

Do not hold the cigarette lighter pressed in.

Use a Toyota genuine cigarette lighter or equivalent for replacement.

ASHTRAYS

Front: To use the ashtray, pull it out.
Rear: To use the ashtray, open the lid.

When finished with your cigarette, thoroughly extinguish it in the ashtray to prevent other cigarette butts from catching fire. After using the ashtray, push it back in completely.

Front—To remove the ashtray, press down on the lock spring plate and pull out.

Rear—To remove the ashtray, pull it out.

⚠ CAUTION

To reduce the chance of injury in case of an accident or sudden stop while driving, always completely close the ashtray after using it.

Power outlets

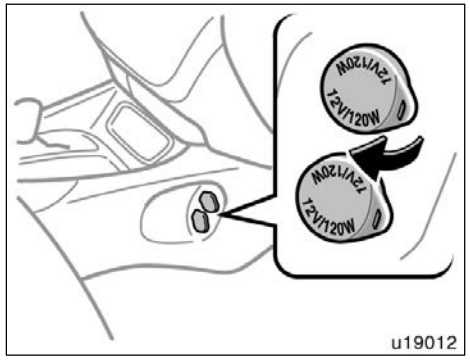

Instrument panel

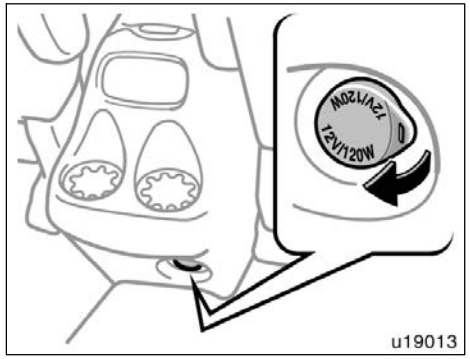

Rear console box

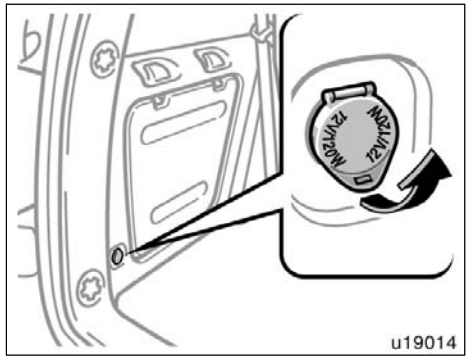

Luggage compartment

The power outlets are designed for power supply for car accessories.

The key must be in the “ACC” or “ON” position for the power outlet to be used.

NOTICE

- ***To prevent the fuse from being blown, do not use the electricity over the total vehicle capacity of 12V/120W.***
- ***To prevent the battery from being discharged, do not use the power outlets longer than necessary when the engine is not running.***

◡ ***Close the power outlet lids when the power outlets are not in use. Inserting a foreign object other than the appropriate plug that fits the outlet, or allowing any liquid into the outlet may cause electrical failure or short circuits.***

Glove box

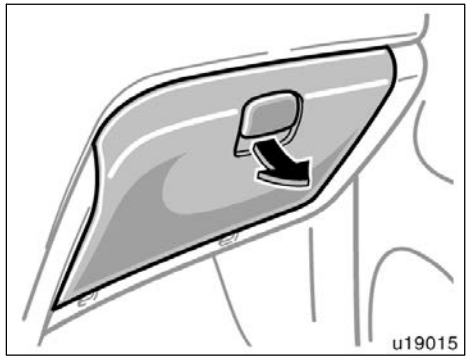

To use the glove box, pull the lever.

The glove box light will come on when the glove box is open with the instrument panel lights on.

⚠ CAUTION

To reduce the chance of injury in case of an accident or a sudden stop, always keep the glove box door closed while driving.

Garage door opener box

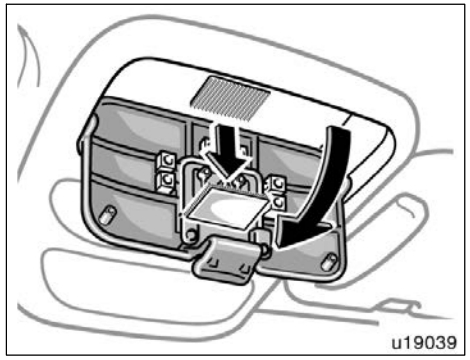

The box is designed to store a garage door opener transmitter.

Open the cover and remove the Velcro loop.

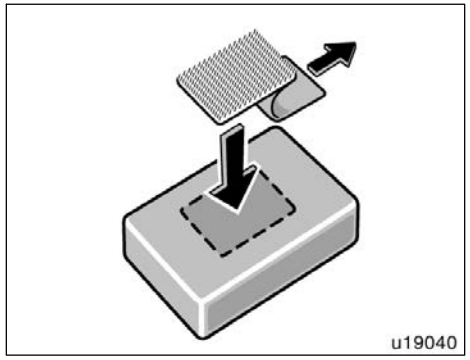

Remove the paper strip covering the adhesive on back side of square and adhere the square to back side of the transmitter near the center.

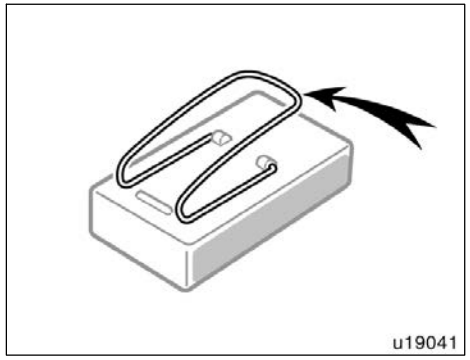

Please note if transmitter has wire clip for sun visor, this clip must be removed prior to adhesion of the Velcro.

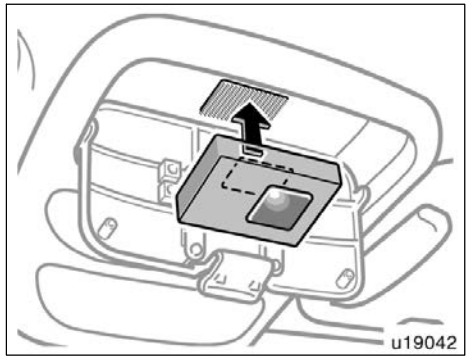

Place the transmitter with Velcro square facing inside of box into the box. Make sure the transmitter button is located above button pins.

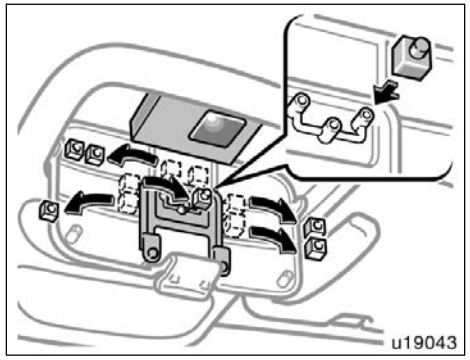

Remove spacers from the center panel. Place the largest spacer on the pin that would be below transmitter button when the cover is closed. Close the cover.

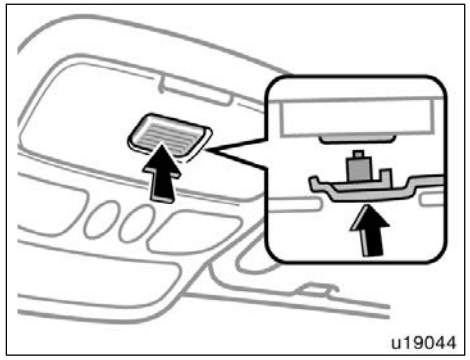

When the garage door opener transmitter is properly installed, you can operate the transmitter by pushing the center panel of the cover.

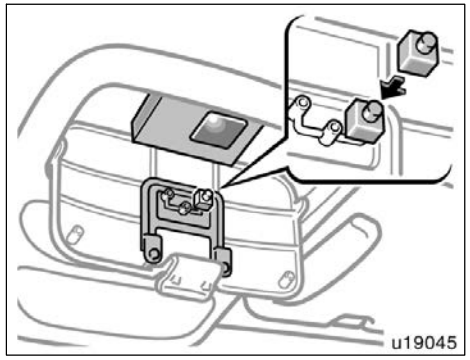

If the center panel does not contact your garage door opener transmitter:

- à Check to see if spacer is on the correct pin.
- à Attach another spacer to the top of original spacer. Check operation. If required, continue to add spacers until contact is achieved.

If the transmitter is clattering during driving, fill in a piece of felt or pad to prevent the transmitter from clattering.

⚠ CAUTION

- To reduce the chance of injury in case of an accident or a sudden stop, always keep the garage door opener box closed while driving.
- Keep the remaining spacers away from children.

Auxiliary boxes—

To use the auxiliary boxes, open the lids as shown in the following illustrations.

⚠ CAUTION

- To reduce the chance of injury in case of an accident or a sudden stop, always keep the auxiliary box closed while driving.
- Type A and B—As these holder are designed for holding a light object such as an eyeglass, do not place any heavy objects in them. Heavy objects may cause the holder to open and contents to fly out resulting in injuries.

NOTICE

Type A and B—During hot weather, the interior of the vehicle becomes very hot. Do not leave anything flammable or deformable such as a lighter, glasses, etc. inside.

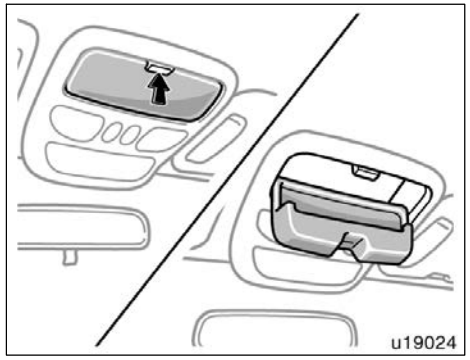

Type A (over head console with electric moon roof)

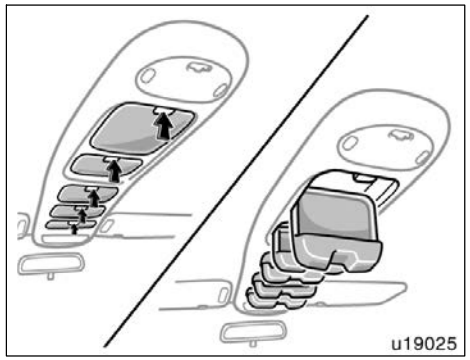

Type B (over head console without electric moon roof)

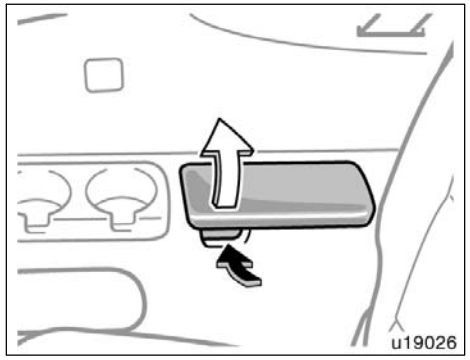

Type C (rear side trim)

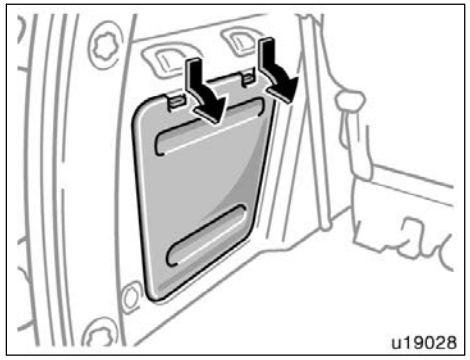

Type E (rear left side panel)

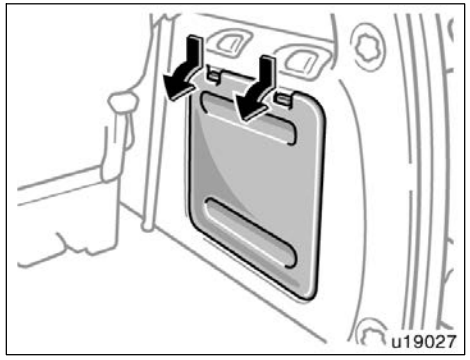

Type D (rear right side panel—without rear air conditioning system)

—Warning reflector holder

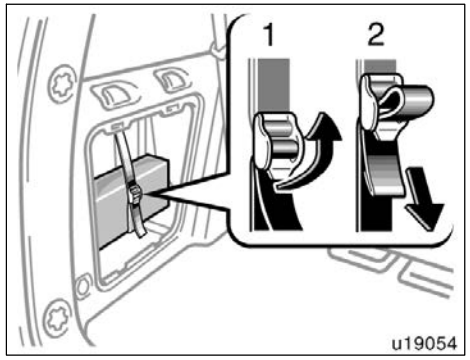

The auxiliary box type E is equipped with a strap to hold the warning reflector.

Although the warning reflector itself is not included as an original equipment, this auxiliary box can be used to store the warning reflector.

Hold the warning reflector kit with the straps.

1. To loosen: Pull the buckle forward.
2. To tighten: Pull on the belt.

Make sure the warning reflector is securely held.

Rear console box

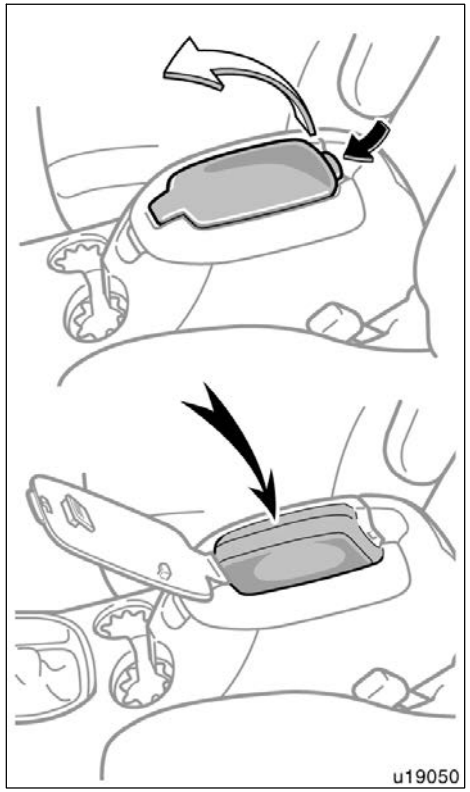

UPPER TRAY

To access the upper tray, raise the console box lid while pushing the lock release button.

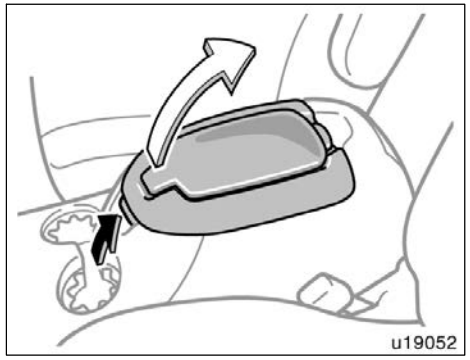

CONSOLE BOX

To access the rear console box, pull up the console box lid while pushing the lock release button.

⚠ CAUTION

To reduce the chance of injury in case of an accident or a sudden stop, always keep the console box closed while driving.

Note pad holder

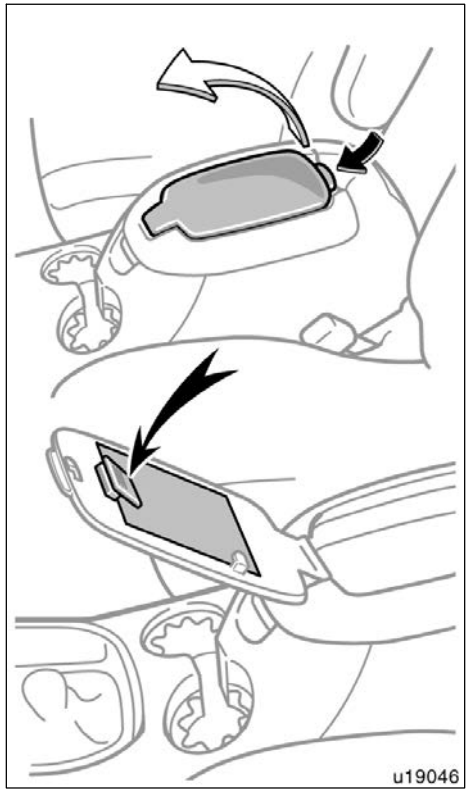

The note pad holder is designed to hold small paper such as note pads.

To use the holder, raise the console box upper lid while pushing the lock release button.

⚠ CAUTION

- **Do not write on the note pad holder while the vehicle is moving.**
- **Do not place anything else on the note pad holder. Such items may be thrown about in the compartment and possibly cause injury during sudden braking or an accident.**
- **To reduce the chance of injury in case of an accident or a sudden stop while driving, keep the console box upper lid closed when it is not in use.**

Coin holder

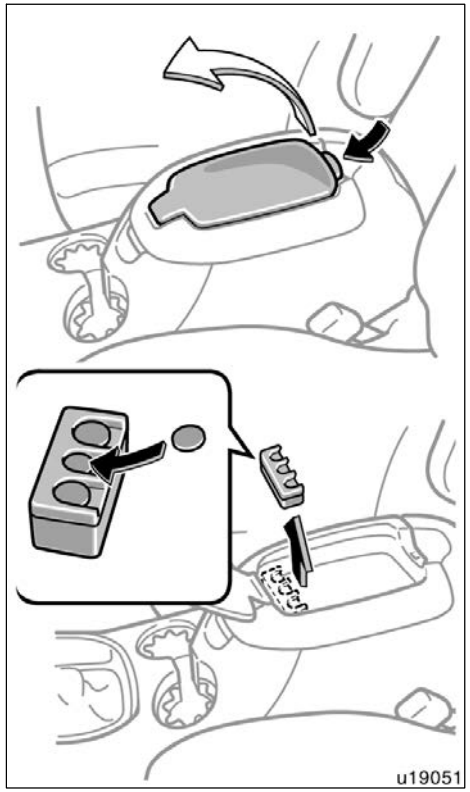

The rear console box is equipped with a coin holder.

To use the coin holder:

1. Raise the console box upper lid while pushing the lock release button.
2. Push coins down into the holder.

The coin holder is detachable.

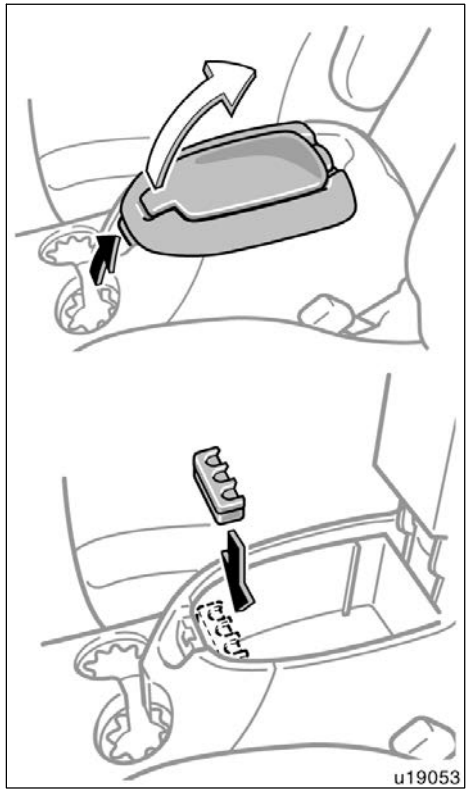

The coin holder can be set in the console box.

To set the coin holder in the console box, raise the console box lid by pulling up the lock release lever.

Compact disc and cassette tape holder

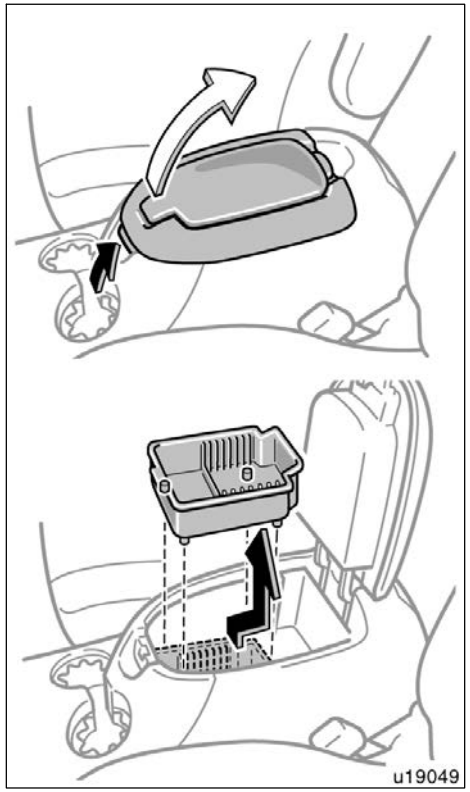

The rear console box is equipped with compact disc and cassette tape holder.

To use the holder, raise the console box lid by pulling up the lock release lever.

The compact disc and cassette tape holder is detachable.

Cup holders

The cup holder is designed for holding cups or drink−cans securely. To use them, observe the following illustrations.

⚠ CAUTION

- **Do not place anything else other than cups or drink−cans in the cup holder, as such items may be thrown about and possibly injure people in the vehicle during sudden braking or in an accident.**
- **To reduce the chance of injury in case of an accident or a sudden stop while driving, keep the cup holder closed when it is not in use.**

NOTICE

Type A only—As this holder is designed for holding soft cups only, do not place too heavy a cup, drink−can or bottle in it.

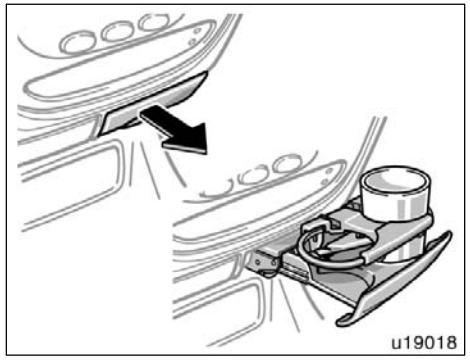

Type A (instrument panel)

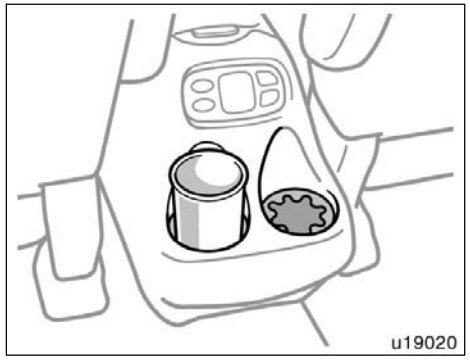

Type C (rear side of rear console box)

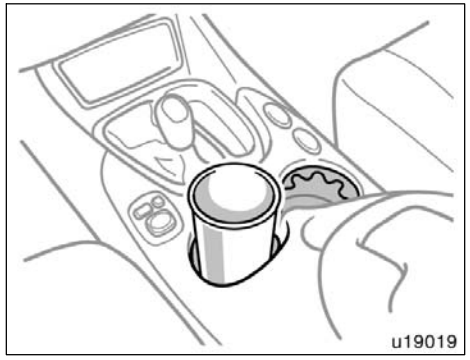

Type B (front side of rear console box)

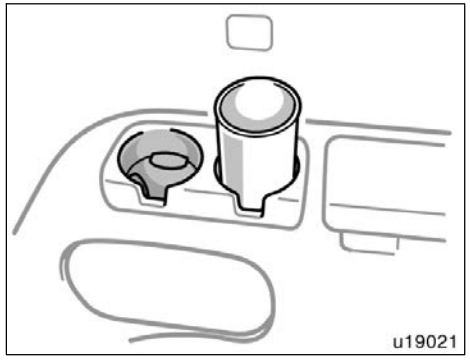

Type D (rear side trim)

Tie−down hooks

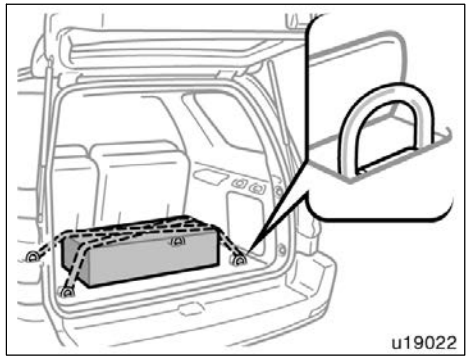

To secure your luggage, use the tie−down hooks as shown above.

See “Luggage stowage precautions” on page 222 in Section 2 for precautions in loading luggage.

⚠ CAUTION

To avoid personal injury, keep the tie−down hooks folded in place on the floor when not in use.

NOTICE

Do not use the seat anchors instead of the tie−down hooks.

Grocery bag hooks

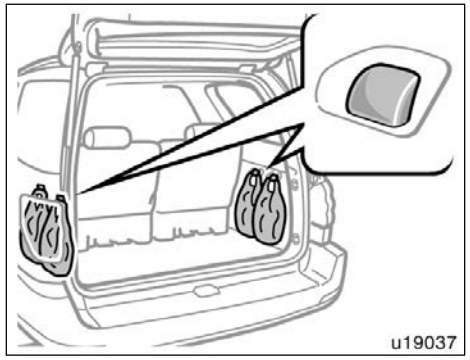

These hooks are designed to hang things like grocery bags.

NOTICE
To prevent damage to the hook, avoid hanging heavy loads on it.

Cargo net hooks

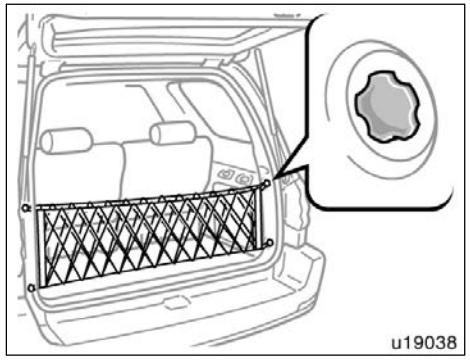

These hooks are designed to hang cargo net.

Although the cargo net itself is not included as an original equipment, these hooks can be used to hang the cargo net.

NOTICE
To prevent damage to the hook, avoid hanging things other than a cargo net on it.

Roof luggage carrier

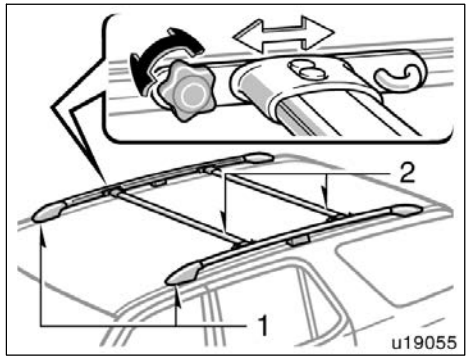

The roof luggage carrier consists of roof rails (1) attached to the roof and sliding cross rails (2).

To adjust the positions of cross rails, do this.

1. Turn the knobs counterclockwise to loosen the cross rails.
2. Slide the cross rails to the desired position for loading the luggages of various sizes.
3. After adjusting, be sure to tighten the crossrails by turning knobs clockwise.

Follow the manufacture's instructions and precautions when installing the attachments or their equivalent.

⚠ CAUTION

When you load cargo on the roof luggage carrier, observe the following:

- **Place the cargo so that its weight is distributed evenly between the front and rear axles.**
- **If loading long or wide cargo, never exceed the vehicle overall length or width. (See "Dimensions and weight" on page 308 in Section 8 for information on your vehicle overall length and width.)**
- **Before driving, make sure the cargo is securely fastened on the roof luggage carrier.**
- **Loading cargo on the roof luggage carrier will make the center of the vehicle gravity higher. Avoid high speeds, sudden starts, sharp turns, sudden braking or abrupt maneuvers, otherwise it may result in loss of control or vehicle rollover due to failure to operate this vehicle correctly.**
- **If driving for a long distance, on rough roads, or at high speeds, stop the vehicle now and then during the trip to make sure the cargo remains in its place.**
- **Do not exceed 68 kg (150 lb.) cargo weight on the roof luggage carrier.**

NOTICE

When loading the luggages, be careful not to scratch the surface of the moon roof.

Floor mat

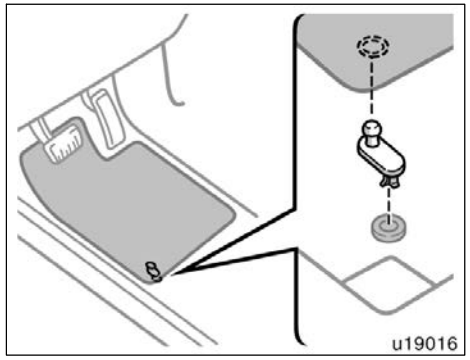

Use a floor mat of the correct size.

If the floor carpet and floor mat have a hole, then it is designed for use with a locking clip. Fix the floor mat with locking clip into the hole in the floor carpet.

CAUTION

Make sure the floor mat is properly placed on the floor carpet. If the floor mat slips and interferes with the movement of the pedals during driving, it may cause an accident.

SECTION 2

INFORMATION BEFORE DRIVING YOUR TOYOTA

Off−road vehicle precautions 212
Break−in period 213
Fuel 213
Fuel pump shut off system 215
Operation in foreign countries 215
Three−way catalytic converter 216
Engine exhaust cautions 217
Facts about engine oil consumption 217
Brake system 218
Brake pad wear limit indicators 222
Luggage stowage precautions 222
Your Toyota's identification 223
Theft prevention labels 224
Suspension and chassis 224
Types of tires 224

Off−road vehicle precautions

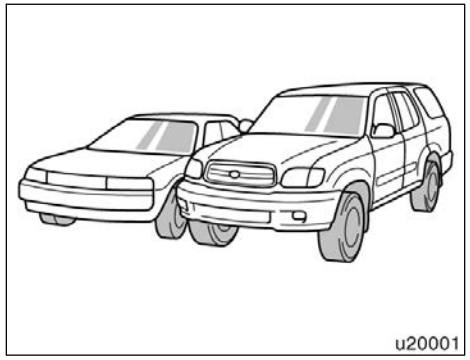

This vehicle belongs to the utility vehicle class, which has higher ground clearance and narrower tread in relation to the height of its center of gravity to make it capable of performing in a wide variety of off−road applications. Specific design characteristics give it a higher center of gravity than ordinary passenger cars. This vehicle design feature causes this type of vehicle to be more likely to rollover. And, utility vehicles have a significantly higher rollover rate than other types of vehicles. An advantage of the higher ground clearance is a better view of the road allowing you to anticipate problems. It is not designed for cornering at the same speeds as ordinary passenger cars any more than low−slung sports cars designed to perform satisfactorily under off−road conditions. Therefore, sharp turns at excessive speeds may cause rollover.

⚠ CAUTION

Always observe the following precautions to minimize the risk of serious personal injury or damage to your vehicle:

- **In a rollover crash, an unbelted person is significantly more likely to die than a person wearing a seat belt. Therefore, the driver and all passengers should fasten their seat belts whenever the vehicle is moving.**
- **Avoid sharp turns or abrupt maneuvers, if at all possible. Failure to operate this vehicle correctly may result in loss of control or vehicle rollover causing death or serious injury.**
- **Loading cargo on the roof luggage carrier will make the center of the vehicle gravity higher. Avoid high speeds, sudden starts, sharp turns, sudden braking or abrupt maneuvers, otherwise it may result in loss of control or vehicle rollover due to failure to operate this vehicle correctly.**

- **Always slow down in gusty cross-winds. Because of its profile and higher center of gravity, your vehicle is more sensitive to side winds than an ordinary passenger car. Slowing down will allow you to have better control.**
- **When driving off−road or in rugged terrain, do not drive at excessive speeds, jump, make sharp turns, strike objects, etc. This may cause loss of control or vehicle rollover causing death or serious injury. You are also risking expensive damage to your vehicle's suspension and chassis.**
- **Do not drive horizontally across steep slopes. Driving straight up or straight down is preferred. Your vehicle (or any similar off−road vehicle) can tip over sideways much more easily than forward or backward.**

Break−in period

Drive gently and avoid high speeds.

Your vehicle does not need an elaborate break−in. But following a few simple tips for the first 1600 km (1000 miles) can add to the future economy and long life of your vehicle:

- Do not drive over 88 km/h (55 mph).
- Run the engine at moderate speed between 2000 and 4000 rpm.
- Avoid full−throttle starts.
- Try to avoid hard stops during the first 300 km (200 miles).
- Do not drive for a long time at any single speed, either fast or slow.
- Do not tow a trailer during the first 3200km (2000miles).

Fuel

FUEL TYPE

Your new vehicle must use only unleaded gasoline.

To help prevent gas station mix−ups, your Toyota has a smaller fuel tank opening. The special nozzle on pumps with unleaded fuel will fit it, but the larger standard nozzle on pumps with leaded gas will not.

At a minimum, the gasoline you use should meet the specifications of ASTM D4814 in the U.S.A. and CGSB 3.5−M93 in Canada.

NOTICE

Do not use leaded gasoline. Use of leaded gasoline will cause the three−way catalytic converter to lose its effectiveness and the emission control system to function improperly. Also, this can increase maintenance costs.

OCTANE RATING

Select Octane Rating 87 (Research Octane Number 91) or higher.

Use of unleaded gasoline with an octane rating or research octane number lower than stated above will cause persistent heavy knocking. If it is severe, this will lead to engine damage.

If your engine knocks...

If you detect heavy knocking even when using the recommended fuel, or if you hear steady knocking while holding a steady speed on level roads, consult your Toyota dealer.

However, now and then, you may notice light knocking for a short time while accelerating or driving up hills. This is no need of concern.

GASOLINE CONTAINING DETERGENT ADDITIVES

Toyota recommends the use of gasoline that contains detergent additives to avoid build−up of engine deposits.

However, all gasoline sold in the U.S. contains detergent additives to keep clean and/or clean intake systems.

QUALITY GASOLINE

Automotive manufacturers in the U.S., Europe and Japan have developed a specification for quality fuel named World−Wide Fuel Charter (WWFC) that is expected to be applied world wide. The WWFC consists of three categories that depend on required emission levels. In the U.S., category 3 has been adopted. The WWFC improves air quality by providing for better emissions in vehicle fleets, and customer satisfaction through better vehicle performance.

CLEANER BURNING GASOLINE

Cleaner burning gasoline, including reformulated gasoline that contains oxygenates such as ethanol or MTBE is available in many areas.

Toyota recommends the use of cleaner burning gasoline and appropriately blended reformulated gasoline. These types of gasoline provide excellent vehicle performance, reduce vehicle emissions, and improve air quality.

OXYGENATES IN GASOLINE

Toyota allows the use of oxygenate blended gasoline where the oxygenate content is up to 10% ethanol or 15% MTBE. If you use gasohol in your Toyota, be sure that it has an octane rating no lower than 87.

Toyota does not recommend the use of gasoline containing methanol.

GASOLINE CONTAINING MMT

Some gasoline contain an octane enhancing additive called MMT (Methylcyclopentadienyl Manganese Tricarbonyl).

Toyota does not recommend the use of gasoline that contains MMT. If fuel containing MMT is used, your emission control system may be adversely affected. The Malfunction Indicator Lamp on the instrument cluster may come on. If this happens, contact your Toyota dealer for service.

GASOLINE QUALITY

In a very few cases, you may experience driveability problems caused by the particular gasoline that you are using. If you continue to have unacceptable driveability, try changing gasoline brands. If this does not rectify your problem, then consult your Toyota dealer.

NOTICE

- ***Do not use gasohol other than stated above. It will cause fuel system damage or vehicle performance problems.***
- ***If driveability problems occur (poor hot starting, vaporizing, engine knock, etc.), discontinue the use.***
- ***Take care not to spill gasohol during refueling. Gasohol may cause paint damage.***

FUEL TANK CAPACITY

98.5 L (26 gal., 21.6 Imp. gal.)

Fuel pump shut off system

The fuel pump shut off system stops supplying fuel to the engine to minimize the risk of fuel leakage when the engine stalls or an airbag inflates upon collision. To restart the engine after the fuel pump shut off system activates, turn the ignition switch to “ACC” or “LOCK” once and start it.

⚠ CAUTION

Inspect the ground under the vehicle before restarting the engine. If you find that liquid has leaked onto the ground, it is the fuel system has been damaged and it is in need of repair. In this case, do not restart the engine.

Operation in foreign countries

If you plan to drive your Toyota in another country...

First, comply with the vehicle registration laws.

Second, confirm the availability of the correct fuel (unleaded and minimum octane number).

Three−way catalytic converters

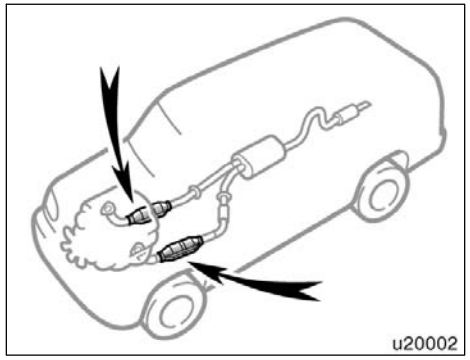

The three−way catalytic converter is an emission control device installed in the exhaust system.

The purpose is to reduce pollutants in the exhaust gas.

⚠ CAUTION

- **Keep people and combustible materials away from the exhaust pipe while the engine is running. The exhaust gas is very hot.**
- **Do not idle or park your vehicle over anything that might burn easily such as grass, leaves, paper or rags.**

NOTICE

A large amount of unburned gases flowing into the three−way catalytic converter may cause it to overheat and create a fire hazard. To prevent this and other damage, observe the following precautions:

- ***Use only unleaded gasoline.***
- ***Do not drive with an extremely low fuel level; running out of fuel could cause the engine to misfire, creating an excessive load on the three−way catalytic converter.***
- ***Do not allow the engine to run at idle speed for more than 20 minutes.***
- ***Avoid racing the engine.***
- ***Do not push−start or pull−start your vehicle.***
- ***Do not turn off the ignition while the vehicle is moving.***
- ***Keep your engine in good running order. Malfunctions in the engine electrical system, electronic ignition system/distributor ignition system or fuel systems could cause an extremely high three−way catalytic converter temperature.***
- ***If the engine becomes difficult to start or stalls frequently, take your vehicle in for a check−up as soon as possible. Remember, your Toyota dealer knows your vehicle and its three−way catalytic converter system best.***
- ***To ensure that the three−way catalytic converter and the entire emission control system operate properly, your vehicle must receive the periodic inspections required by the Toyota Maintenance Schedule. For scheduled maintenance information, refer to the "Scheduled Maintenance Guide" or "Owner's Manual Supplement".***

Engine exhaust cautions

CAUTION

- **Avoid inhaling the engine exhaust. It contains carbon monoxide, which is a colorless and odorless gas. It can cause unconsciousness or even death.**
- **Make sure the exhaust system has no holes or loose connections. The system should be checked from time to time. If you hit something, or notice a change in the sound of the exhaust, have the system checked immediately.**
- **Do not run the engine in a garage or enclosed area except for the time needed to drive the vehicle in or out. The exhaust gases cannot escape, making this a particularly dangerous situation.**
- **Do not remain for a long time in a parked vehicle with the engine running. If it is unavoidable, however, do so only in an unconfined area and adjust the heating or cooling system to force outside air into the vehicle.**
- **Keep the back door and back window closed while driving. An open or unsealed back door and back window, may cause exhaust gases to be drawn into the vehicle.**
- **To allow proper operation of your vehicle's ventilation system, keep the inlet grilles in front of the windshield clear of snow, leaves, or other obstructions.**
- **If you smell exhaust fumes in the vehicle, drive with the windows open and the back door and back window closed. Have the cause immediately located and corrected.**

Facts about engine oil consumption

FUNCTIONS OF ENGINE OIL

Engine oil has the primary functions of lubricating and cooling the inside of the engine, and plays a major role in maintaining the engine in proper working order.

ENGINE OIL CONSUMPTION

It is normal that an engine should consume some engine oil during normal engine operation. The causes of oil consumption in a normal engine are as follows.

- Oil is used to lubricate pistons, piston rings and cylinders. A thin film of oil is left on the cylinder wall when a piston moves downwards in the cylinder. High negative pressure generated when the vehicle is decelerating sucks some of this oil into the combustion chamber. This oil as well as some part of the oil film left on the cylinder wall is burned by the high temperature combustion gases during the combustion process.

à Oil is also used to lubricate the stems of the intake valves. Some of this oil is sucked into the combustion chamber together with the intake air and is burned along with the fuel. High temperature exhaust gases also burn the oil used to lubricate the exhaust valve stems.

The amount of engine oil consumed depends on the viscosity of the oil, the quality of the oil and the conditions the vehicle is driven under.

More oil is consumed by high−speed driving and frequent acceleration and deceleration.

A new engine consumes more oil, since its pistons, piston rings and cylinder walls have not become conditioned.

When judging the amount of oil consumption, note that the oil may become diluted and make it difficult to judge the true level accurately.

As an example, if a vehicle is used for repeated short trips, and consumes a normal amount of oil, the dipstick may not show any drop in the oil level at all, even after 1000 km (600 miles) or more. This is because the oil is gradually becoming diluted with fuel or moisture, making it appear that the oil level has not changed. The diluting ingredients evaporate out when the vehicle is then driven at high speeds, as on an expressway, making it appear that oil is excessively consumed after driving at high speeds.

IMPORTANCE OF ENGINE OIL LEVEL CHECK

One of the most important points in proper vehicle maintenance is to keep the engine oil at the optimum level so that oil function will not be impaired. Therefore, it is essential that the oil level be checked regularly. Toyota recommends that the oil level be checked every time you refuel the vehicle.

NOTICE

Failure to check the oil level regularly could lead to serious engine trouble due to insufficient oil.

For detailed information on oil level check, see “Checking the engine oil level” on page 284 in Section 7−2.

Brake system

The tandem master cylinder brake system is a hydraulic system with two separate sub−systems. If either sub−system should fail, the other will still work. However, the pedal will be harder to press, and your stopping distance will be longer. Also, the brake system warning light may come on.

⚠ CAUTION

Do not drive your vehicle with only a single brake system. Have your brakes fixed immediately.

BRAKE BOOSTER

The brake booster uses engine vacuum to power−assist the brakes. If the engine should quit while you are driving, you can bring the vehicle to a stop with normal pedal pressure. There is enough reserved vacuum for one or two stops—but no more!

⚠ CAUTION

- **Do not pump the brake pedal if the engine stalls. Each push on the pedal uses up your reserved vacuum.**
- **Even if the power assist is completely lost, the brakes will still work. But you will have to push the pedal hard, much harder than normal. And your braking distance will be longer.**

ANTI−LOCK BRAKE SYSTEM (with "ABS" warning light)

The anti−lock brake system is designed to help prevent lock−up of the wheels during a sudden braking or braking on slippery road surfaces. This assists in providing directional stability and steering performance of the vehicle under these circumstances.

Effective way to press the ABS brake pedal: When the anti−lock brake system function is in action, you may feel the brake pedal pulsating and hear a noise. In this situation, to let the anti−lock brake system work for you, just hold the brake pedal down more firmly. Do not pump the brake in a panic stop. This will result in reduced braking performance.

The anti−lock brake system becomes operative after the vehicle has accelerated to a speed in excess of approximately 10 km/h (6 mph). It stops operating when the vehicle decelerates to a speed below approximately 5 km/h (3 mph).

Depressing the brake pedal on slippery road surfaces such as on the manhole cover, the steel plate under the construction, joints in the bridge, etc. on a rainy day tends to activate the anti−lock brake system.

You may hear a click or motor sound in the engine compartment for a few seconds when the engine is started or just after the vehicle is started. This means that the anti−lock brake system is in the self−check mode, and does not indicate a malfunction.

When the anti−lock brake system is activated, the following conditions may occur. They do not indicate a malfunction of the system:

- You may hear the anti−lock brake system operating and feel the brake pedal pulsating and the vibrations of the vehicle body and steering wheel. You may also hear the motor sound in the engine compartment even after the vehicle is stopped.
- At the end of the anti−lock brake system activation, the brake pedal may move a little forward.

⚠ CAUTION

Do not overestimate the anti−lock brake system: Although the anti−lock brake system assists in providing vehicle control, it is still important to drive with all due care and maintain a moderate speed and safe distance from the vehicle in front of you, because there are limits to the vehicle stability and effectiveness of steering wheel operation even with the anti−lock brake system on.

If tires grip performance exceeds its capability, or if hydroplaning occurs during high speed driving in the rain, the anti−lock brake system does not provide vehicle control.

Anti−lock brake system is not designed to shorten the stopping distance: Always drive at the moderate speed and maintain a safe distance from the vehicle in front of you. Compared with vehicles without an anti−lock brake system, your vehicle may require a longer stopping distance in the following cases:

- **Driving on rough, gravel or snow−covered roads.**
- **Driving with tire chains installed.**
- **Driving over the steps such as the joints on the road.**
- **Driving on roads where the road surface is pitted or has other differences in surface height.**

Install all 4 tires of specified size at appropriate pressure: The anti−lock brake system detects vehicle speeds using the speed sensors for respective wheels' turning speeds. The use of tires other than specified may fail to detect the accurate turning speed resulting in a longer stopping distance.

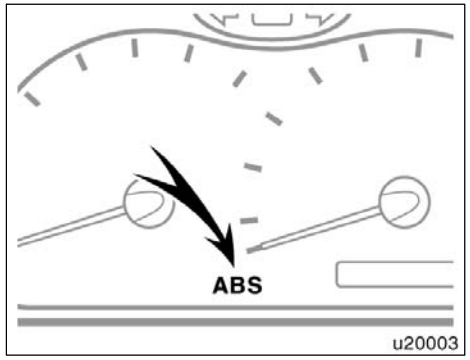

Type A

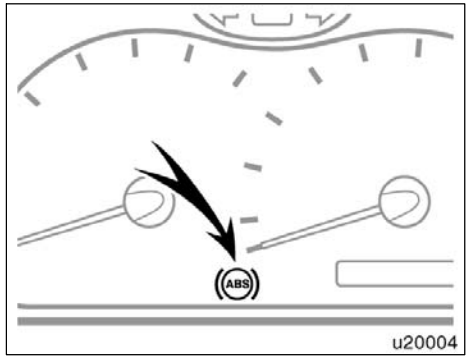

Type B

“ABS” warning light

The light comes on when the ignition key is turned to the “ON” position. If the anti−lock brake system works properly, the light turns off after a few seconds. Thereafter, if the system malfunctions, the light comes on again.

When the “ABS” warning light is on (and the brake system warning light is off), the anti−lock brake system, the traction control system and/or the vehicle skid control system do/does not operate, but the brake system still operates conventionally.

When the “ABS” warning light is on (and the brake system warning light is off), the anti−lock brake system does not operate so that the wheels could lock up during a sudden braking or braking on slippery road surfaces.

If either of the following conditions occurs, this indicates a malfunction somewhere in the parts monitored by the warning light system. Contact your Toyota dealer as soon as possible to service the vehicle.

- The light does not come on when the ignition key is turned to the “ON” position, or remains on.
- The light comes on while you are driving.

A warning light turning on briefly during operation does not indicate a problem.

CAUTION

If the “ABS” warning light remains on together with the brake system warning light, immediately stop your vehicle at a safe place and contact your Toyota dealer.

In this case, not only the anti−lock brake system will fail but also the vehicle will become extremely unstable during braking.

DRUM−IN−DISC TYPE PARKING BRAKE SYSTEM

Your vehicle has a drum−in−disc type parking brake system. This type of brake system needs bedding−down of the brake shoes periodically or whenever the parking brake shoes and/or drums are replaced.

Have your Toyota dealer perform the bedding−down.

Brake pad wear limit indicators

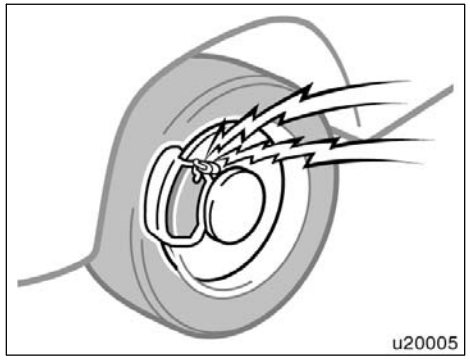

The brake pad wear limit indicators on your disc brakes give a warning noise when the brake pads are worn to where replacement is required.

If you hear a squealing or scraping noise while driving, have the brake pads checked and replaced by your Toyota dealer as soon as possible. Expensive rotor damage can result if the pads are not replaced when necessary.

Luggage stowage precautions

When stowing luggage or cargo in the vehicle, observe the following:

- Put luggage or cargo in the luggage compartment when at all possible. Be sure all items are secured in place.
- Be careful to keep the vehicle balanced. Locating the weight as far forward as possible helps maintain balance.
- For better fuel economy, do not carry unneeded weight.

⚠ CAUTION

- **To prevent luggage or packages from sliding forward during braking, do not stack anything in the luggage compartment higher than the seatbacks. Keep luggage or packages low, as close to the floor as possible.**
- **Never allow anyone to ride in the luggage compartment. It is not designed for passengers. They should ride in their seats with their seat belts properly fastened. Otherwise, they are much more likely to suffer serious bodily injury, in the event of sudden braking or a collision.**
- **Do not place anything on the luggage cover. Such items may be thrown about and possibly injure people in the vehicle during sudden braking or an accident. Secure all items in a safe place.**
- **Do not drive with objects left on top of the instrument panel. They may interfere with the driver's field of view. Or they may move during sharp vehicle acceleration or turning, and impair the driver's control of the vehicle. In an accident they may injure the vehicle occupants.**

NOTICE

Do not load the vehicle beyond the vehicle capacity weight specified on page 308 in Section 8.

Your Toyota's identification—
—Vehicle identification number

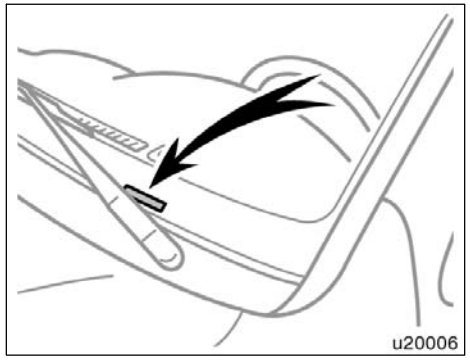

The vehicle identification number (VIN) is the legal identifier for your vehicle. This number is on the left top of the instrument panel, and can be seen through the windshield from outside.

This is the primary identification number for your Toyota. It is used in registering the ownership of your vehicle.

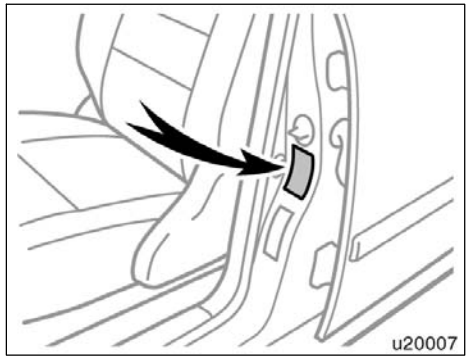

The vehicle identification number (VIN) is also on the Certification Label.

—Engine number

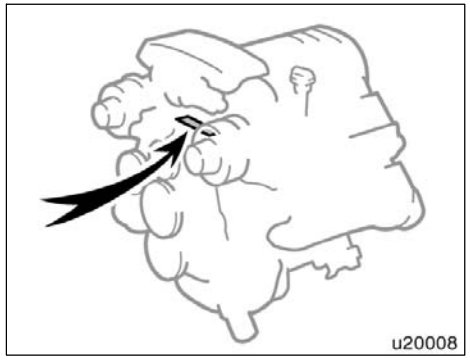

The engine number is stamped on the engine block as shown.

Theft prevention labels (except for Canada)

Your new vehicle carries theft prevention labels which are approximately 56 mm (2.20 in.) by 16 mm (0.63 in.).

The purpose of these labels is to reduce the incidence of vehicle thefts by facilitating the tracing and recovery of parts from stolen vehicles. The label is designed so that once it is applied to a surface, any attempt to remove it will result in destroying the integrity of the label. Transferring these labels intact from one part to another, will be impossible.

NOTICE

You should not attempt to remove the theft prevention labels as it may violate certain state or federal laws.

Suspension and chassis

CAUTION

Do not modify the suspension/chassis with lift kits, spacers, springs, etc. It can cause dangerous handling characteristics resulting in loss of control.

Types of tires

Determine what kind of tires your vehicle is originally equipped with.

1. Summer tires

Summer tires are high−speed capability tires best suited to highway driving under dry conditions.

Since summer tires do not have the same traction performance as snow tires, summer tires are inadequate for driving on snow−covered or icy roads. For driving on snow−covered or icy roads, we recommend using snow tires. If installing snow tires, be sure to replace all four tires.

2. All season tires

All season tires are designed to provide better traction in snow and to be adequate for driving in most winter conditions, as well as for use all year round.

All season tires, however, do not have adequate traction performance compared with snow tires in heavy or loose snow. Also, all season tires fall short in acceleration and handling performance compared with summer tires in highway driving.

CAUTION

- **Do not mix summer and all season tires on your vehicle as this can cause dangerous handling characteristics, resulting in loss of control.**
- **Do not use tire other than the manufacturer's designated tires, and never mix tires or wheels of the sizes different from the originals.**

SECTION 3

STARTING AND DRIVING

Before starting the engine 228
How to start the engine 228
Tips for driving in various conditions 229
Off−road driving precautions 230
Winter driving tips 232
Dinghy towing 233
Trailer towing 233
How to save fuel and make your vehicle last longer 240

Before starting the engine

1. Check the area around the vehicle before entering it.
2. Adjust seat position, seatback angle, seat cushion angle, head restraint height and steering wheel angle.
3. Adjust the inside and outside rear view mirrors.
4. Lock all doors.
5. Fasten seat belts.

How to start the engine— (a) Before cranking

1. Apply the parking brake firmly.
2. Turn off unnecessary lights and accessories.
3. Put the selector lever in “P”. If you need to restart the engine while the vehicle is moving, put the selector lever in “N”. A starter safety device will prevent the starter from operating if the selector lever is in any drive position.
4. Depress the brake pedal and hold it to the floor until driving off.

(b) Starting the engine

Before starting the engine, be sure to follow the instructions in “(a) Before cranking”.

Normal starting procedure

The multiport fuel injection system/sequential multiport fuel injection system in your engine automatically controls the proper air−fuel mixture for starting. You can start a cold or hot engine as follows:

1. With your foot off the accelerator pedal, crank the engine by turning the key to “START”. Release it when the engine starts.
2. After the engine runs for about 10 seconds, you are ready to drive.

If the weather is below freezing, let the engine warm up for a few minutes before driving.

If the engine stalls...

Simply restart it, using the correct procedure given in normal starting.

If the engine will not start...

See “If your vehicle will not start” on page 244 in Section 4.

NOTICE

- ***Do not crank for more than 30 seconds at a time. This may overheat the starter and wiring systems.***
- ***Do not race a cold engine.***
- ***If the engine becomes difficult to start or stalls frequently, have the engine checked immediately.***

Tips for driving in various conditions

- Always slow down in gusty crosswinds. This will allow you much better control.
- Drive slowly onto curbs and, if possible, at a right angle. Avoid driving onto high, sharp−edged objects and other road hazards. Failure to do so can lead to severe tire damage resulting in tire bursts.
- When parking on a hill, turn the front wheels until they touch the curb so that the vehicle will not roll. Apply the parking brake, and place the transmission in “P”. If necessary, block the wheels.
- Washing your vehicle or driving through deep water may get the brakes wet. To see whether they are wet, check that there is no traffic near you, and then press the pedal lightly. If you do not feel a normal braking force, the brakes are probably wet. To dry them, drive the vehicle cautiously while lightly pressing the brake pedal with the parking brake applied. If they still do not work safely, pull to the side of the road and call a Toyota dealer for assistance.
- Four−wheel drive models—Toyota recommends not using four−wheel drive on dry hard−surfaced roads, because four−wheel driving will cause unnecessary noise and wear, and poor fuel economy.
- Four−wheel drive models—In cold temperatures, noise may occur when driving in two−wheel drive before the transfer is warmed up. Therefore, first drive in four−wheel drive until the transfer is warmed up.

⚠ CAUTION

- **Before driving off, make sure that the parking brake is fully released and the parking brake reminder light is off.**
- **Do not leave your vehicle unattended while the engine is running.**
- **Do not rest your foot on the brake pedal while driving. It can cause dangerous overheating, needless wear, and poor fuel economy.**

- **To drive down a long or steep hill, reduce your speed and downshift. Remember, if you ride the brakes excessively, they may overheat and not work properly.**
- **Be careful when accelerating, upshifting, downshifting or braking on a slippery surface. Sudden acceleration or engine braking, could cause the vehicle to spin or skid.**
- **Do not drive in excess of the speed limit. Even if the legal speed limit permits it, do not drive over 140 km/h (85 mph) unless your vehicle has high−speed capability tires. Driving over 140 km/h (85 mph) may result in tire failure, loss of control and possible injury. Be sure to consult a tire dealer to determine whether the tires on your vehicle are high−speed capability tires or not before driving at such speeds.**

- **Do not continue normal driving when the brakes are wet. If they are wet, your vehicle will require a longer stopping distance, and it may pull to one side when the brakes are applied. Also, the parking brake will not hold the vehicle securely.**

Off−road driving precautions

When driving your vehicle off−road, please observe the following precautions to ensure your driving enjoyment and to help prevent the closure of areas to off−road vehicles.

a. Drive your vehicle only in areas where off−road vehicles are permitted to travel.

b. Respect private property. Get owner's permission before entering private property.

c. Do not enter areas that are closed. Honor gates, barriers and signs that restrict travel.

d. Stay on established roads. When conditions are wet, driving techniques should be changed or travel delayed to prevent damage to roads.

For owners in U.S. mainland, Hawaii and Puerto Rico:

To obtain additional information pertaining to driving your vehicle off−road, consult the following organizations.

- State and Local Parks and Recreation Departments
- State Motor Vehicle Bureau
- Recreational Vehicle Clubs

à U.S. Forest Service and Bureau of Land Management

⚠ CAUTION

Always observe the following precautions to minimize the risk of serious personal injury or damage to your vehicle:

- **Drive carefully when off the road. Do not take unnecessary risks by driving in dangerous places.**
- **Do not grip the steering wheel spokes when driving off−road. A bad bump could jerk the wheel and injure your hands. Keep both hands and especially your thumbs on the outside of the rim.**
- **Always check your brakes for effectiveness immediately after driving in sand, mud, water or snow.**
- **After driving through tall grass, mud, rock, sand, rivers, etc., check that there is no grass, bush, paper, rags, stone, sand, etc. adhering or trapped on the underbody. Clear off any such matter from the underbody. If the vehicle is used with these materials trapped or adhering to the underbody, a breakdown or fire could occur.**
- **In a rollover crash, an unbelted person is significantly more likely to die than a person wearing a seat belt. Therefore, the driver and all passengers should fasten their seat belts whenever the vehicle is moving.**
- **When driving off−road or in rugged terrain, do not drive at excessive speeds, jump, make sharp turns, strike objects, etc. This may cause loss of control or vehicle rollover causing death or serious injury. You are also risking expensive damage to your vehicle's suspension and chassis.**

NOTICE

- ***If driving through water, such as when crossing shallow streams, first check the depth of the water and the bottom of the river bed for firmness. Drive slowly and avoid deep water.***
- ***Take all necessary safety measures to ensure that water damage to the engine or other components does not occur.***

  Water entering the engine air intake will cause severe engine damage.

  Water can wash the grease from wheel bearings, causing rusting and premature failure, and may also enter the differentials, transmission and transfer case, reducing the gear oil's lubricating qualities.
- ***Sand and mud that has accumulated in brake drums and around brake discs may affect braking efficiency and may damage brake system components.***

◡ ***Always perform a maintenance inspection after each day of off−road driving that has taken you through rough terrain, sand, mud, or water. For scheduled maintenance information, refer to the "Scheduled Maintenance Guide" or "Owner's Manual Supplement".***

Winter driving tips

Make sure you have a proper freeze protection of engine coolant.

Your coolant must contain ethylene−glycol type coolant for a proper corrosion protection of aluminum components. Use "TOYOTA Long Life Coolant" or equivalent.

See page 285 in Section 7−2 for details about coolant type selection.

NOTICE
Do not use alcohol type antifreeze or plain water alone.

When it is extremely cold, we recommend to use 60% solution for your Toyota, to provide protection down to about −50°C (−58°F). Do not use more than 70% solution for better coolant performance.

Check the condition of the battery and cables.

Cold temperatures reduce the capacity of any battery, so it must be in top shape to provide enough power for winter starting. Section 7−3 tells you how to visually inspect the battery. Your Toyota dealer and most service stations will be pleased to check the level of charge.

Make sure the engine oil viscosity is suitable for the cold weather.

See page 284 in Section 7−2 for recommended viscosity. Leaving a heavy summer oil in your vehicle during winter months may cause harder starting. If you are not sure about which oil to use, call your Toyota dealer—he will be pleased to help.

Keep the door locks from freezing.

Squirt lock de−icer or glycerine into the locks to keep them from freezing.

Use a washer fluid containing an antifreeze solution.

This product is available at your Toyota dealer and most auto parts stores. Follow the manufacturer's directions for how much to mix with water.

NOTICE
Do not use engine antifreeze or any other substitute because it may damage your vehicle's paint.

Do not use your parking brake when there is a possibility it could freeze.

When parking, put the transmission into “P” and block the front wheels. Do not use the parking brake, or snow or water accumulated in and around the parking brake mechanism may freeze, making it hard to release.

Keep ice and snow from accumulating under the fenders.

Ice and snow built up under your fenders can make steering difficult. During bad winter driving, stop and check under the fenders occasionally.

Depending on where you are driving, we recommend you carry some emergency equipment.

Some of the things you might put in the vehicle are tire chains, window scraper, bag of sand or salt, flares, small shovel, jumper cables, etc.

Dinghy towing

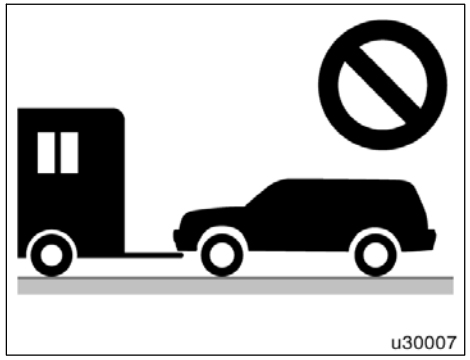

Your vehicle is not designed to be dinghy towed (with four wheels on the ground) behind a motorhome.

NOTICE
Do not tow your vehicle with four wheels on the ground. This may cause serious damage to your vehicle.

Trailer towing

Your vehicle is designed primarily as a passenger−and−load−carrying vehicle. Towing a trailer will have an adverse effect on handling, performance, braking, durability and driving economy (fuel consumption, etc.). Your safety and satisfaction depend on the proper use of correct equipment and cautious driving habits. For your safety and the safety of others, you must not overload your vehicle or trailer. Ask your local Toyota dealer for further details before towing.

WEIGHT LIMITS

Before towing, make sure the total trailer weight, gross combination weight, gross vehicle weight, gross axle weight and trailer tongue load are all within the limits.

The total trailer weight and tongue load can be measured with platform scales found at a highway weighing station, building supply company, trucking company, junk yard, etc.

⚠ CAUTION

- **The maximum gross trailer weight (trailer weight plus cargo weight) must never exceed the following.**

  Two−wheel drive models
  2948 kg (6500 lb.)

  Four−wheel drive models
  2812 kg (6200 lb.)

  If towing a trailer and cargo weighing over 907 kg (2000 lb.), it is necessary to use a sway control device with sufficient capacity. The combination of the gross trailer weight added to the total weight of the vehicle, occupants and vehicle cargo must never exceed a total of 5352 kg. (11800 lb.)

  Exceeding the maximum weight of the trailer, the vehicle, or the vehicle and trailer combination, can cause an accident resulting in serious personal injuries.

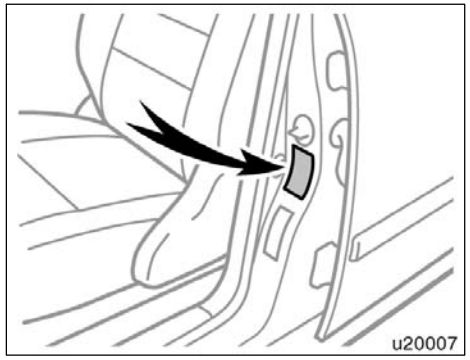

- **Trailer hitch assemblies have different weight capacities established by the hitch manufacturer. Even though the vehicle may be physically capable of towing a higher weight, the operator must determine the maximum weight rating of the particular hitch assembly and never exceed the maximum weight rating specified for the trailer−hitch. Exceeding the maximum weight rating set by the trailer hitch manufacturer can cause an accident resulting in serious personal injuries.**

- **The gross vehicle weight must not exceed the Gross Vehicle Weight Rating (GVWR) indicated on the Certification Label. The gross vehicle weight is the sum of weights of the unloaded vehicle, driver, passengers, luggage, hitch and trailer tongue load. It also includes the weight of any special equipment installed on your vehicle.**
- **The load on either the front or rear axle resulting from distribution of the gross vehicle weight on both axles must not exceed the Gross Axle Weight Rating (GAWR) listed on the Certification Label.**

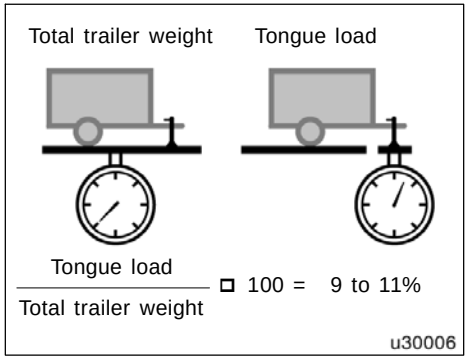

⚠ CAUTION

- **The trailer cargo load should be distributed so that the tongue load is 9 to 11% of the total trailer weight, not exceeding the maximum load of the following. Never load the trailer with more weight in the back than in the front. About 60% of the trailer load should be in the front half of the trailer and the remaining 40% in the rear.**

  Weight carrying hitch or distributing hitch
  Two−wheel drive models
  281 kg (620 lb.)
  Four−wheel drive models
  295 kg (650 lb.)

HITCHES

- If you wish to install a trailer hitch, you should consult with your Toyota dealer.
- Use only a hitch recommended by the hitch manufacturer and the one which conforms to the total trailer weight requirement.
- The hitch must be bolted securely to the vehicle frame and installed according to the hitch manufacturer's instructions.
- The hitch ball and king pin should have a light coat of grease.
- Toyota recommends removing the trailer hitch whenever you are not towing a trailer to reduce the possibility of additional damage caused by the hitch if your vehicle is struck from behind. After removing the hitch, seal any mounting holes in the vehicle body to prevent entry of pollutants such as exhaust fumes, dirt, water, etc.

NOTICE

Do not use axle−mounted hitches as they can cause damage to the axle housing, wheel bearings, wheels or tires. Also, never install a hitch which may interfere with the normal function of an Energy Absorbing Bumper, if so equipped.

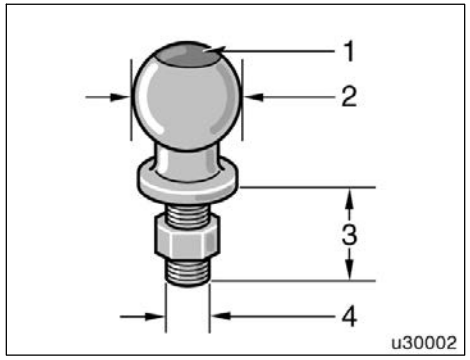

1 Trailer ball load rating
2 Ball diameter
3 Shank length
4 Shank diameter

TRAILER BALL

Follow these easy steps to properly determine the correct trailer ball for your application:

1. Determine the correct trailer ball size for the trailer coupler. Most couplers are stamped with the required trailer ball size. The sizes you will most likely find stamped on the coupler are:

Trailer class	Typical trailer ball size
III and IV	2—5/16 in.
II	2 in.
I	1—7/8 in.

2. Select the appropriate trailer ball to match or exceed the gross trailer weight rating of the trailer. The trailer ball load rating should be printed on the top of the ball.
3. When mounted in the ball mount, the threaded ball shank must protrude beyond the bottom of the lock washer and nut at least 2 threads. The trailer ball shank must be matched to the ball mount hole diameter size.

NOTICE
Only use a ball mount attachment specified for the Toyota Sequoia.

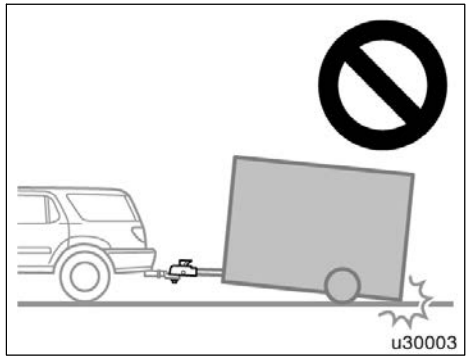

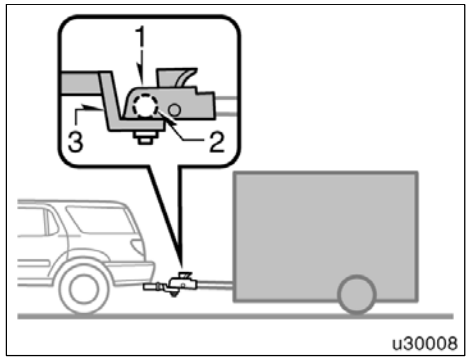

1 Coupler
2 Trailer ball
3 Ball mount attachment

MATCHING TRAILER BALL HEIGHT TO TRAILER COUPLER HEIGHT

No matter which class of tow hitch applies, for a safe trailer hookup, the trailer ball setup on must be the proper height for the coupler on the trailer.

BRAKES AND SAFETY CHAINS

- Toyota recommends trailers with brakes that conform to any applicable federal and state/provincial regulations.
- A safety chain must always be used between the towing vehicle and the trailer. Leave sufficient slack in the chain for turns. The chain should cross under the trailer tongue to prevent the tongue from dropping to the ground in case it becomes damaged or separated. For correct safety chain procedures, follow the hitch or trailer manufacturer's recommendations.

⚠ CAUTION

- **If the total trailer weight exceeds 453 kg (1000 lb.), trailer brakes are required**.
- **Never tap into your vehicle's hydraulic system as it would lower its braking effectiveness**.
- **Never tow a trailer without using a safety chain securely attached to both the trailer and the vehicle. If damage occurs to the coupling unit or hitch ball, there is danger of the trailer wandering over into another lane.**

TIRES

- Ensure that your vehicle's tires are properly inflated. See page 288 in Section 7−2 for instructions.
- The trailer tires should be inflated to the pressure recommended by the trailer manufacturer in respect to the total trailer weight.

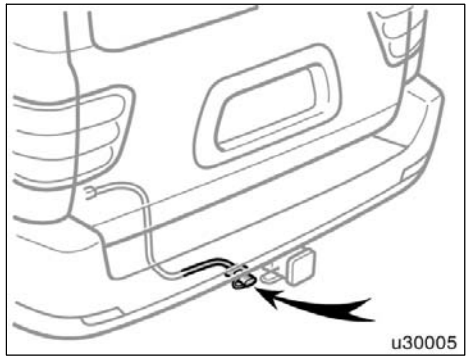

TRAILER LIGHTS

- Your vehicle is equipped with a wire harness stored in the rear end under body. Some models are fitted with a socket for trailer lights under the rear bumper. Use either of them to connect and operate the trailer lights. However, the trailer lights must comply with federal, state/provincial and local regulations. See your local recreational vehicle dealer or rental agency for the correct type of wiring and relays for your trailer. Check for correct operation of the turn signals and stop lights each time you hitch up. Direct splicing may damage your vehicle's electrical system and cause a malfunction of your lights.

NOTICE
Do not tow a trailer with (1) total tail light electric power consumption of over 93 W or (2) total turn and stop light electric power consumption of over 54 W.
Ex. (1) Tail lights→under 9.3 W (SAE J573 No.69) □ 10 bulbs
(2) Turn/stop lights→under 27 W (SAE J573 No.1157) □ 4 bulbs (left 2, right 2)

BREAK−IN SCHEDULE

- Toyota recommends that you do not tow a trailer with a new vehicle or a vehicle with any new power train component (engine, transmission, differential, wheel bearing, etc.) for the first 3200 km (2000 miles) of driving.

MAINTENANCE

- If you tow a trailer, your vehicle will require more frequent maintenance due to the additional load. For this information, please refer to the scheduled maintenance information in the “Scheduled Maintenance Guide” or “Owner’s Manual Supplement”.
- Retighten all fixing bolts of the towing ball and bracket after approximately 1000 km (600 miles) of trailer driving.

PRE−TOWING SAFETY CHECK

- Check that your vehicle remains level when a loaded or unloaded trailer is hitched. Do not drive if the vehicle has an abnormal nose−up or nose−down condition, and check for improper tongue load, overload, worn suspension or other possible causes.
- Make sure the trailer cargo is securely loaded so that it cannot shift.
- Check that your rear view mirrors conform to any applicable federal, state/provincial or local regulations. If not, install the rear view mirrors required for towing purpose.

TRAILER TOWING TIPS

When towing a trailer, your vehicle will handle differently than when not towing. The three main causes of vehicle−trailer accidents are driver error, excessive speed and improper trailer loading. Keep these in mind when towing:

- Before starting out, check operation of the lights and all vehicle−trailer connections. After driving a short distance, stop and recheck the lights and connections. Before actually towing a trailer, practice turning, stopping and backing with a trailer in an area away from traffic until you learn the feel.
- Backing with a trailer is difficult and requires practice. Grip the bottom of the steering wheel and move your hand to the left to move the trailer to the left. Move your hand to the right to move the trailer to the right. (This procedure is generally opposite to that when backing without a trailer). Also, just turn the steering wheel a little at a time, avoiding sharp or prolonged turning. Have someone guide you when backing to reduce the risk of an accident.

- Because stopping distance may be increased, vehicle−to−vehicle distance should be increased when towing a trailer. For each 16 km/h (10 mph) of speed, allow at least one vehicle and trailer length between you and the vehicle ahead. Avoid sudden braking as you may skid, resulting in jackknifing and loss of control. This is especially true on wet or slippery surfaces.
- Avoid jerky starts or sudden acceleration.
- Avoid jerky steering and sharp turns. The trailer could hit your vehicle in a tight turn. Slow down before making a turn to avoid the necessity of sudden braking.
- Remember that when making a turn, the trailer wheels will be closer than the vehicle wheels to the inside of the turn. Therefore, compensate for this by making a larger than normal turning radius with your vehicle.
- Crosswinds and rough roads will adversely affect handling of your vehicle and trailer, causing sway. Pay attention to the rear from time to time to prepare yourself for being passed by large trucks or buses, which may cause your vehicle and trailer to sway. If swaying happens, firmly grip the steering wheel and reduce speed immediately but gradually. Never increase speed. Steer straight ahead. If you make no extreme correction with the steering or brakes, the vehicle and trailer will stabilize.
- Be careful when passing other vehicles. Passing requires considerable distance. After passing a vehicle, do not forget the length of your trailer and be sure you have plenty of room before changing lanes.
- In order to maintain engine braking efficiency, do not use overdrive.
- Because of the added load of the trailer, your vehicle's engine may overheat on hot days (at temperatures over 30°C [85°F]) when going up a long or steep grade with a trailer. If the engine coolant temperature gauge indicates overheating, immediately turn off the air conditioning (if in use), pull off the road and stop in a safe spot. Refer to "If your vehicle overheats" on page 248 in Section 4.
- Always place wheel blocks under both the vehicle and trailer wheels when parking. Apply the parking brake firmly. Put the transmission in "P". Avoid parking on a slope with a trailer, but if it cannot be avoided, do so only after performing the following:

1. Apply the brakes and hold.
2. Have someone place wheel blocks under both the vehicle and trailer wheels.
3. When the wheel blocks are in place, release your brakes slowly until the blocks absorb the load.
4. Apply the parking brake firmly.
5. Shift into "P" and turn off the engine.

When restarting out after parking on a slope:

1. With the transmission in “P” position, start the engine. Be sure to keep the brake pedal depressed.
2. Shift into gear.
3. Release the parking brake and brake pedal and slowly pull or back away from the wheel blocks. Stop and apply your brakes.
4. Have someone retrieve the blocks.

⚠ CAUTION

- **Do not exceed 72 km/h (45 mph) or the posted towing speed limit, whichever is lower. Because instability (swaying) of a towing vehicle–trailer combination usually increases as the speed increases, exceeding 72 km/h (45 mph) may cause loss of control.**
- **Slow down and downshift before descending steep or long downhill grades. Do not make sudden downshifts.**

- **Avoid holding the brake pedal down too long or too frequently. This could cause the brakes to overheat and result in reduced braking efficiency.**

How to save fuel and make your vehicle last longer

Improving fuel economy is easy—just take it easy. It will help make your vehicle last longer, too. Here are some specific tips on how to save money on both fuel and repairs:

- **Keep your tires inflated at the correct pressure.** Underinflation causes tire wear and wastes fuel. See page 289 in Section 7−2 for instructions.
- **Do not carry unneeded weight in your vehicle.** Excess weight puts a heavier load on the engine, causing greater fuel consumption.
- **Avoid lengthy warm−up idling.** Once the engine is running smoothly, begin driving—but gently. Remember, however, that on cold winter days this may take a little longer.
- **Keep the automatic transmission overdrive turned on when engine braking is not required.** Driving with the overdrive off will reduce the fuel economy. (For details, see “Automatic transmission” on page 133 in Section 1−6.)
- **Accelerate slowly and smoothly.** Avoid jackrabbit starts. Get into high gear as quickly as possible.

- **Avoid long engine idling.** If you have a long wait and you are not in traffic, it is better to turn off the engine and start again later.
- **Avoid engine lugging or over−revving.** Use a gear position suitable for the road on which you are travelling.
- **Avoid continuous speeding up and slowing down.** Stop−and−go driving wastes fuel.
- **Avoid unnecessary stopping and braking. Maintain a steady pace.** Try to time the traffic signals so you only need to stop as little as possible or take advantage of through streets to avoid traffic lights. Keep a proper distance from other vehicles to avoid sudden braking. This will also reduce wear on your brakes.
- **Avoid heavy traffic or traffic jams whenever possible.**
- **Do not rest your foot on the brake pedal.** This causes premature wear, overheating and poor fuel economy.
- **Maintain a moderate speed on highways.** The faster you drive, the greater the fuel consumption. By reducing your speed, you will cut down on fuel consumption.
- **Keep the front wheels in proper alignment.** Avoid hitting the curb and slow down on rough roads. Improper alignment not only causes faster tire wear but also puts an extra load on the engine, which, in turn, wastes fuel.
- **Keep the bottom of your vehicle free from mud, etc.** This not only lessens weight but also helps prevent corrosion.
- **Keep your vehicle tuned−up and in top shape.** A dirty air cleaner, improper valve clearance, dirty plugs, dirty oil and grease, brakes not adjusted, etc. all lower engine performance and contribute to poor fuel economy. For longer life of all parts and lower operating costs, keep all maintenance work on schedule, and if you often drive under severe conditions, see that your vehicle receives more frequent maintenance. (For scheduled maintenance information, please refer to the “Scheduled Maintenance Guide” or “Owner’s Manual Supplement”).

⚠ CAUTION

Never turn off the engine to coast down hills. Your power steering and brake booster will not function without the engine running. Also, the emission control system operates properly only when the engine is running.

SECTION 4

IN CASE OF AN EMERGENCY

If your vehicle will not start 244
If your engine stalls while driving 247
If you cannot increase the engine speed 247
If your vehicle overheats 248
If you have a flat tire 249
If your vehicle needs to be towed 257
If you lose your keys 261
If you lose your wireless remote control transmitter 261

If your vehicle will not start— (a) Simple checks

Before making these checks, make sure you have followed the correct starting procedure given in “How to start the engine” on page 228 in Section 3 and that you have sufficient fuel. Also check whether the other keys will start the engine. If they work, your key may be broken. Have the key checked at your Toyota dealer. If none of your keys work, the system is possibly broken. Call your Toyota dealer. (See “Keys” on page 8 in Section 1−2.)

If the engine is not turning over or is turning over too slowly—

1. Check that the battery terminals are tight and clean.
2. If the battery terminals are O.K., switch on the interior light.
3. If the light is out, dim or goes out when the starter is cranked, the battery is discharged. You may try jump starting. See “(c) Jump starting” for further instructions.

If the light is O.K., but the engine still will not start, it needs adjustment or repair. Call a Toyota dealer or qualified repair shop.

NOTICE

Do not pull− or push−start the vehicle. It may damage the vehicle or cause a collision when the engine starts. Also the three−way catalytic converter may overheat and become a fire hazard.

If the engine turns over at its normal speed but will not start—

1. Turn the ignition key to “ACC” or “LOCK” and try starting the engine again.
2. If the engine will not start, the engine may be flooded because of repeated cranking. See “(b) Starting a flooded engine” for further instructions.
3. If the engine still will not start, it needs adjustment or repair. Call a Toyota dealer or qualified repair shop.

(b) Starting a flooded engine

If the engine will not start, your engine may be flooded because of repeated cranking.

If this happens, turn the key to “START” with the accelerator pedal held down. Keep the key and accelerator pedal in these position for 15 seconds and release them. Then try starting the engine with your foot off the accelerator pedal.

If the engine does not start after 15 seconds of cranking, release the key, wait a few minutes and try again.

If the engine still will not start, it needs adjustment or repair. Call a Toyota dealer or qualified repair shop for assistance.

NOTICE

Do not crank for more than 30 seconds at a time. This may overheat the starter and wiring systems.

(c) Jump starting

To avoid serious personal injury and damage to your vehicle which might result from battery explosion, acid burns, electrical burns, or damaged electronic components, these instructions must be followed precisely.

If you are unsure about how to follow this procedure, we strongly recommend that you seek the help of a competent mechanic or towing service.

⚠ CAUTION

- **Batteries contain sulfuric acid which is poisonous and corrosive. Wear protective safety glasses when jump starting, and avoid spilling acid on your skin, clothing, or vehicle.**
- **If you should accidentally get acid on yourself or in your eyes, remove any contaminated clothing and flush the affected area with water immediately. Then get immediate medical attention. If possible, continue to apply water with a sponge or cloth while en route to the medical office.**
- **The gas normally produced by a battery will explode if a flame or spark is brought near. Use only standardized jumper cables and do not smoke or light a match while jump starting.**
- **Warning: Battery posts, terminals and related accessories contain lead and lead compounds, chemicals known to the State of California to cause cancer and reproductive harm. Wash hands after handling.**

NOTICE

The battery used for boosting must be 12 V. Do not jump start unless you are sure that the booster battery is correct.

JUMP STARTING PROCEDURE

1. If the booster battery is installed in another vehicle, make sure the vehicles are not touching. Turn off all unnecessary lights and accessories.
2. If required, remove all the vent plugs from the booster and discharged batteries. Lay a cloth over the open vents on the batteries. (This helps reduce the explosion hazard, personal injuries and burns.)
3. If the engine in the vehicle with the booster battery is not running, start it and let it run for a few minutes. During jump starting run the engine at about 2000 rpm with the accelerator pedal lightly depressed.

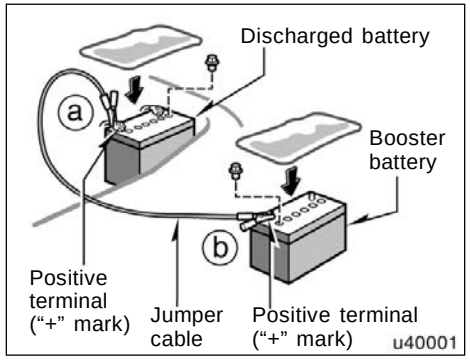

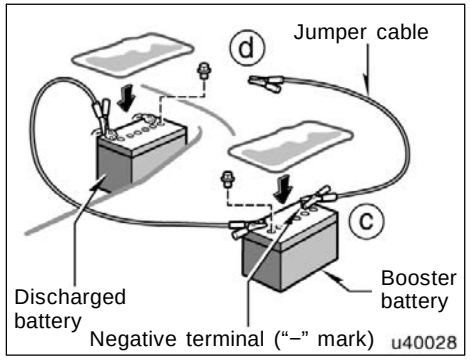

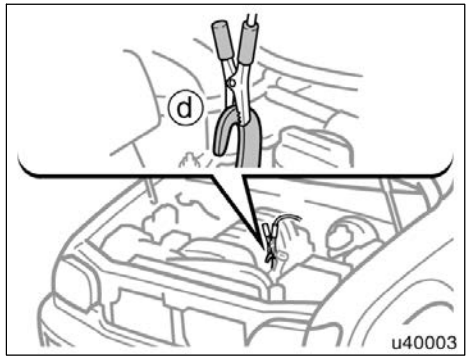

Connecting point

4. Make the cable connections in the order a, b, c, d.

   a. Connect the clamp of the positive (red) jumper cable to the positive (+) terminal on the discharged battery.

   b. Connect the clamp at the other end of the positive (red) jumper cable to the positive (+) terminal on the booster battery.

   c. Connect the clamp of the negative (black) jumper cable to the negative (−) terminal on the booster battery.

   d. Connect the clamp at the other end of the negative (black) jumper cable to a solid, stationary, unpainted, metallic point of the vehicle with the discharged battery.

   The recommended connecting point is shown in the following illustration:

   Do not connect the cable to or near any part that moves when the engine is cranked.

⚠ CAUTION

When making the connections, to avoid serious injury, do not lean over the battery or accidentally let the jumper cables or clamps touch anything except the correct battery terminals or the ground.

5. Start your engine in the normal way. After starting, run it at about 2000 rpm for several minutes with the accelerator pedal lightly depressed.
6. Carefully disconnect the cables in the exact reverse order: the negative cable and then the positive cable.
7. Carefully dispose of the battery cover cloths—they may now contain sulfuric acid.
8. If removed, replace all the battery vent plugs.

If the cause of your battery discharging is not apparent (for example, lights left on), you should have it checked.

If your engine stalls while driving

If your engine stalls while driving...

1. Reduce your speed gradually, keeping a straight line. Move cautiously off the road to a safe place.
2. Turn on your emergency flashers.
3. Turn the ignition key to “ACC” or “LOCK”, and try starting the engine again.

If the engine will not start, see “If your vehicle will not start” on page 244 in this section.

CAUTION

If the engine is not running, the power assist for the brakes and steering will not work so steering and braking will be much harder than usual.

If you cannot increase the engine speed

If the engine speed does not increase with **the accelerator pedal depressed** down to about the middle position, **there may be a problem somewhere in your electronic throttle control system.**

At this time, if you depress the accelerator pedal more firmly and slowly, you can drive you vehicle at low speeds. Have your vehicle checked by your Toyota dealer as soon as possible.

Even if the abnormality of the electronic throttle control system is corrected during low speed driving, the system may not be recovered until the engine is stopped and the ignition key is turned to “ACC” or “LOCK” position.

CAUTION

Be especially careful to prevent erroneous pedal operation.

If your vehicle overheats

If your engine coolant temperature gauge indicates overheating, if you experience a loss of power, or if you hear a loud knocking or pinging noise, the engine has probably overheated. You should follow this procedure...

1. Pull safely off the road, stop the vehicle and turn on your emergency flashers. Put the transmission in “P” and apply the parking brake. Turn off the air conditioning if it is being used.
2. If coolant or steam is boiling out of the radiator or reservoir, stop the engine. Wait until the steam subsides before opening the hood. If there is no coolant boiling over or steam, leave the engine running.

CAUTION

To help avoid personal injury, keep the hood closed until there is no steam. Escaping steam or coolant is a sign of very high pressure.

3. Visually check to see if the engine drive belt (fan belt) is broken or loose. Look for obvious coolant leaks from the radiator, hoses, and under the vehicle. However, note that water draining from the air conditioning is normal if it has been used.

CAUTION

When the engine is running, keep hands and clothing away from the moving fan and engine drive belts.

4. If the engine drive belt is broken or the coolant is leaking, stop the engine immediately. Call a Toyota dealer for assistance.
5. If the engine drive belt is O.K. and there are no obvious leaks, you may help the engine cool down more quickly by running it at about 1500 rpm for a few minutes with the accelerator pedal lightly depressed.
6. Check the coolant reservoir. If it is dry, add coolant to the reservoir while the engine is running. Fill it about half full.

CAUTION

Do not attempt to remove the radiator cap when the engine and radiator are hot. Serious injury could result from scalding hot fluid and steam blown out under pressure.

7. After the engine coolant temperature has cooled to normal, again check the coolant level in the reservoir. If necessary, bring it up to half full again. Serious coolant loss indicates a leak in the system. You should have it checked as soon as possible at your Toyota dealer.

If you have a flat tire—

1. Reduce your speed gradually, keeping a straight line. Move cautiously off the road to a safe place well away from the traffic. Avoid stopping on the center divider of a highway. Park on a level spot with firm ground.
2. Stop the engine and turn on your emergency flashers.
3. Firmly set the parking brake and put the transmission in “P”.
4. Have everyone get out of the vehicle on the side away from traffic.
5. Read the following instructions thoroughly.

⚠ CAUTION

When jacking, be sure to observe the following to reduce the possibility of personal injury:

- **Follow jacking instructions.**
- **Do not put any part of your body under the vehicle supported by the jack. Personal injury may occur.**
- **Do not start or run the engine while your vehicle is supported by the jack.**
- **Stop the vehicle on a level firm ground, firmly set the parking brake and put the transmission in “P”. Block the wheel diagonally opposite to the one being changed if necessary.**
- **Make sure to set the jack properly in the jack point. Raising the vehicle with jack improperly positioned will damage the vehicle or may allow the vehicle to fall off the jack and cause personal injury.**
- **Never get under the vehicle when the vehicle is supported by the jack alone.**
- **Use the jack only for lifting your vehicle during wheel changing.**
- **Do not raise the vehicle with someone in the vehicle.**
- **When raising the vehicle, do not put an object on or under the jack.**
- **Raise the vehicle only high enough to remove and change the tire.**

NOTICE

Do not continue driving with a deflated tire. Driving even a short distance can damage a tire and wheel beyond repair.

—Required tools and spare tire

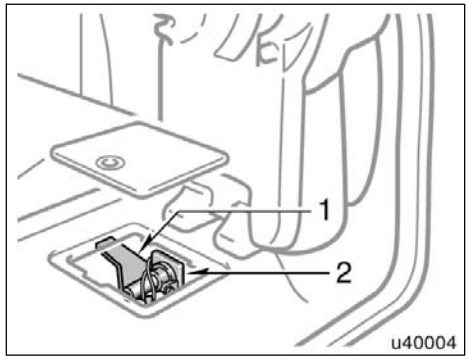

1. Get the required tools under the right side second seat and spare tire.

1. Tool bag
2. Jack

To get the tools, you need to fold up the right side second seat. As for the operation of folding up the seat, see "—Folding up second seats" on page 42 in Section 1−3.

To prepare yourself for an emergency, you should familiarize yourself with the use of the jack, each of the tools and their storage locations.

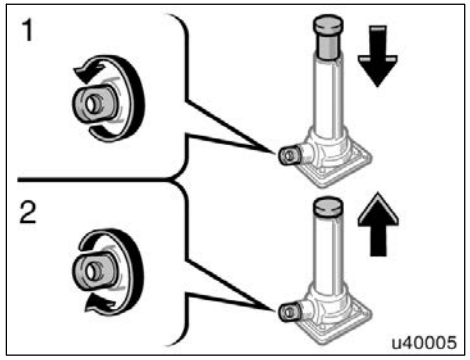

Turn the jack joint by hand.

To remove: Turn the joint in direction 1 until the jack is free.
To store: Turn the joint in direction 2 until the jack is firmly secured to prevent it flying forward during a collision or sudden braking.

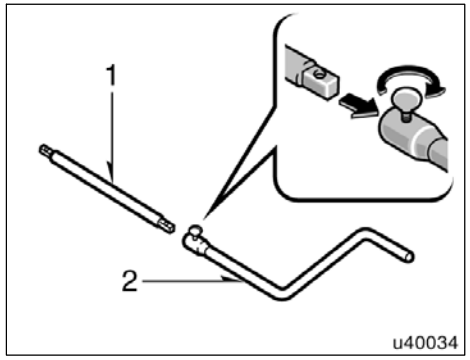

To remove the spare tire:

1. Put a jack handle and jack handle extension together as shown in the illustration.

   1 Jack handle extension
   2 Jack handle

⚠ CAUTION

Make sure they are securely fixed with the screw.

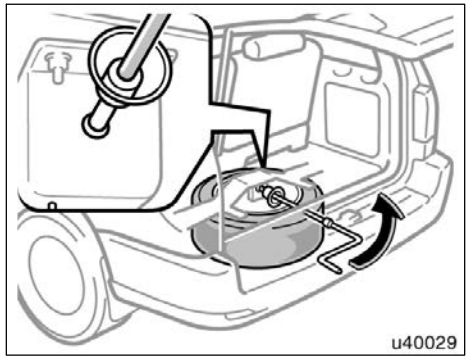

2. Insert the end of the jack handle extension into the lowering screw and turn it counterclockwise with the handle, making sure the handle remains firmly fitted onto the jack handle extension.
3. After the tire is lowered completely to the ground, remove the holding bracket.

When storing the spare tire, put it in place with the outer side of the wheel facing up. Then secure the tire, taking care that the tire goes straight up without catching on any other part, to prevent it from flying forward during a collision or sudden braking.

—Blocking the wheel

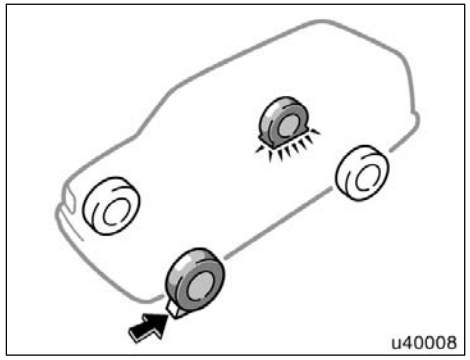

2. Block the wheel diagonally opposite the flat tire to keep the vehicle from rolling when it is jacked up.

When blocking the wheel, place a wheel block from the front for the front wheels or from the rear for the rear wheels.

—Removing wheel ornament

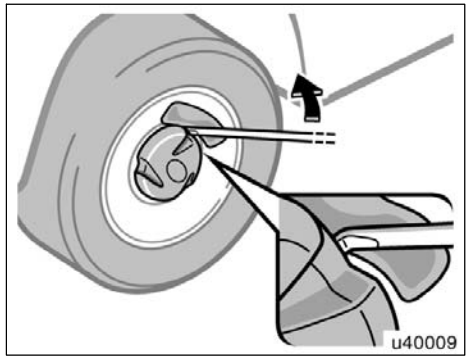

Type A

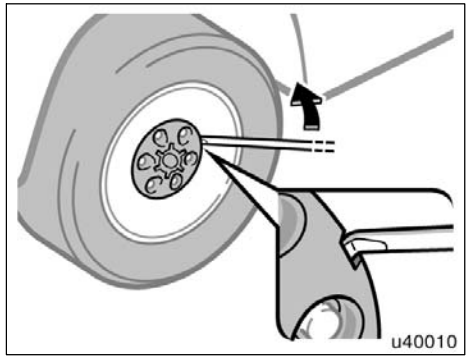

Type B

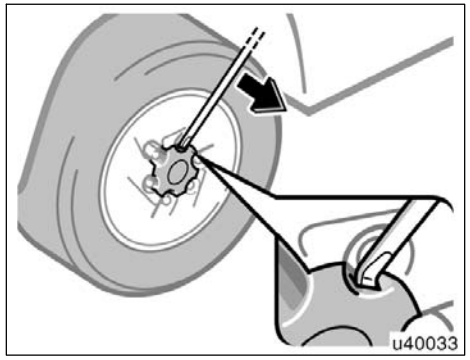

Type C

3. Remove the wheel ornament.

Pry off the wheel ornament, using the beveled end of the wheel nut wrench as shown.

Type A only—To protect the wheel surface, place sufficient paper or cloth between the wheel and wrench.

⚠ CAUTION

Do not try to pull off the ornament by hand. Take due care in handling the ornament to avoid unexpected personal injury.

—Loosening wheel nuts

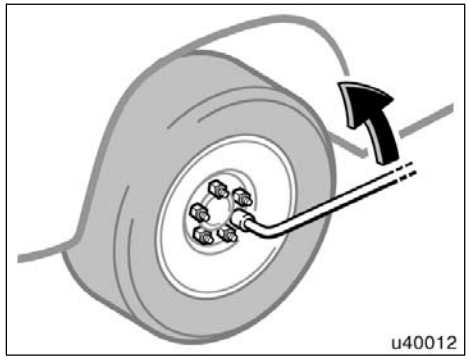

4. Loosen all the wheel nuts.

Always loosen the wheel nuts before raising the vehicle.

Turn the wheel nuts turn counterclockwise to loosen. To get maximum leverage, fit the wrench to the nut so that the handle is on the right side, as shown above. Grab the wrench near the end of the handle and pull up on the handle. Be careful that the wrench does not slip off the nut.

Do not remove the nuts yet—just unscrew them about one−half turn.

—Positioning the jack

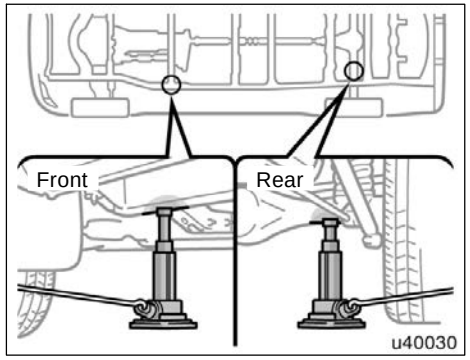

5. Position the jack at the correct jack point as shown.

Make sure the jack is positioned on a level and solid place.

JACK POINTS:

Front—Under the frame side rail
Rear—Under the rear axle housing

—Raising your vehicle

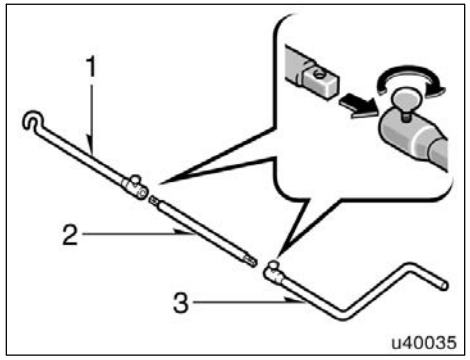

Put a jack handle, jack handle extension and jack handle end together as shown in the illustration.

1 Jack handle end
2 Jack handle extension
3 Jack handle

⚠ CAUTION

Make sure they are each securely fixed with screws.

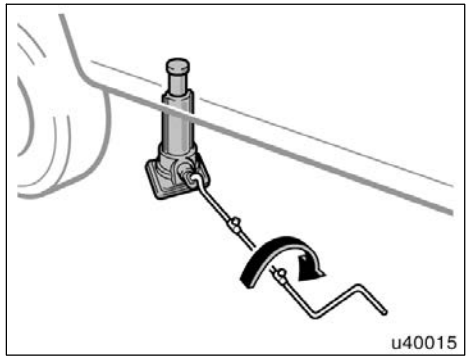

6. After making sure that no one is in the vehicle, raise it high enough so that the spare tire can be installed.

Remember you will need more ground clearance when putting on the spare tire than when removing the flat tire.

To raise the vehicle, insert the jack handle extension in to the jack (it is a loose fit) and turn it clockwise with the handle, making sure the handle remains firmly fitted onto the jack handle extension. As the jack touches the vehicle and begins to fit, double−check that it is properly positioned.

⚠ CAUTION

Never get under the vehicle when the vehicle is supported by the jack alone.

—Changing wheels

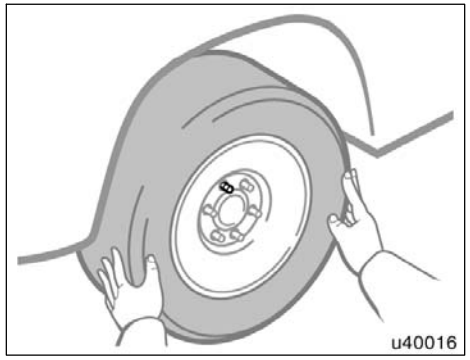

7. Remove the wheel nuts and change tires.

Lift the flat tire straight off and put it aside.

Roll the spare wheel into position and align the holes in the wheel with the bolts. Then lift up the wheel and get at least the top bolt started through its hole. Wiggle the tire and press it back over the other bolts.

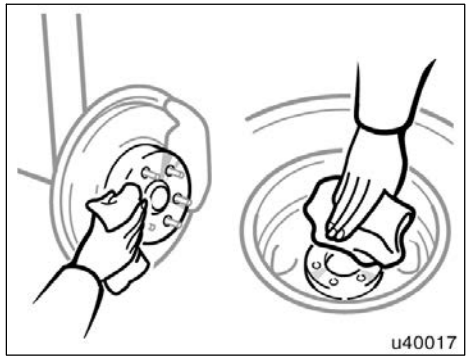

Before putting on wheels, remove any corrosion on the mounting surfaces with a wire brush or such. Installation of wheels without good metal−to−metal contact at the mounting surface can cause wheel nuts to loosen and eventually cause a wheel to come off while driving. Therefore after the first 1600 km (1000 miles), check to see that the wheel nuts are tight.

—Reinstalling wheel nuts

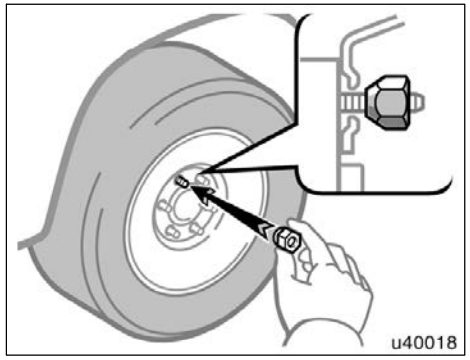

8. Reinstall all the wheel nuts finger tight.

Reinstall the wheel nuts (tapered end inward) and tighten them as much as you can by hand. Press back on the tire back and see if you can tighten them more.

—Lowering your vehicle

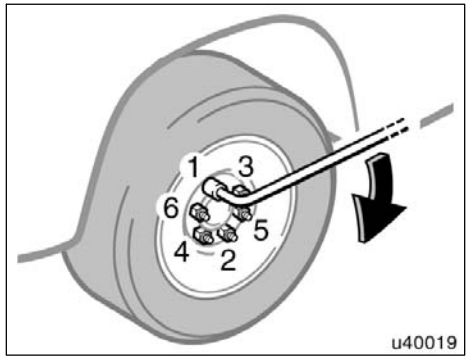

9. Lower the vehicle completely and tighten the wheel nuts.

Turn the jack handle extension counter-clockwise with handle to lower the vehicle, making sure the handle remains firmly fitted onto the jack handle extension.

Use only the wheel nut wrench and turn it clockwise to tighten the nuts. Do not use other tools or any additional leverage other than your hands, such as a hammer, pipe or your foot. Make sure the wrench is securely engaged over the nut.

Tighten each nut a little at a time in the order shown. Repeat the process until all the nuts are tight.

⚠ CAUTION

When lowering the vehicle, make sure all portions of your body and all other persons around will not be injured as the vehicle is lowered to the ground.

—Reinstalling wheel ornament

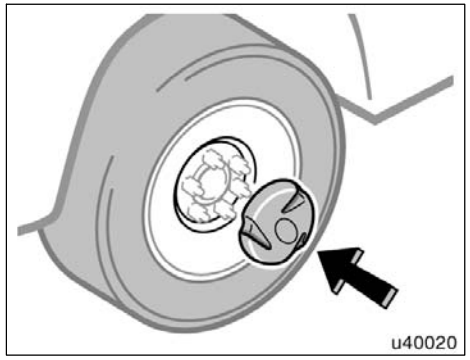

Type A

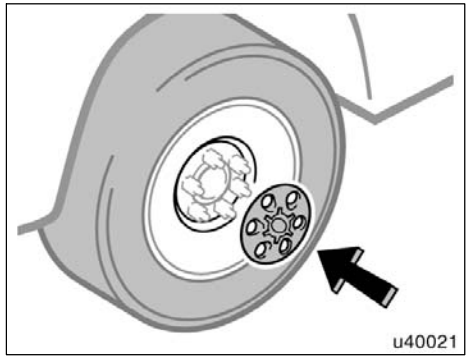

Type B

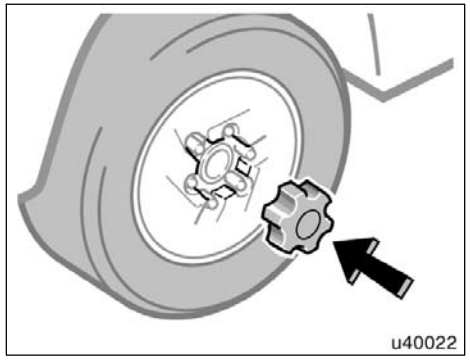

Type C

10. Reinstall the wheel ornament.

Put the wheel ornament into position and then tap it firmly with the side or heel of your hand to snap it into place.

⚠ CAUTION

Take due care in handling the ornament to avoid unexpected personal injury.

—After changing wheels

11. Check the air pressure of the replaced tire.

Adjust the air pressure to the specification designated on page 312 in Section 8. If the pressure is lower, drive slowly to the nearest service station and fill to the correct pressure.

Do not forget to reinstall the tire inflation valve cap as dirt and moisture could get into the valve core and possibly cause air leakage. If the cap is missing, have a new one put on as soon as possible.

12. Restow all the tools, jack and flat tire securely.

With a spare tire of the same wheel type as the installed tires—

As soon after changing wheels as possible, tighten the wheel nuts to the torque specified on page 312 in Section 8 with a torque wrench. Have a technician repair the flat tire.

With a spare tire of different wheel type from the installed tires—

As soon after changing wheels as possible, tighten the wheel nuts to the torque specified on page 312 in Section 8 with a torque wrench. Have a technician repair the flat tire and replace the spare tire with it.

⚠ CAUTION

Before driving, make sure all the tools, jack and flat tire are securely in place in their storage location to reduce the possibility of personal injury during a collision or sudden braking.

If your vehicle needs to be towed—

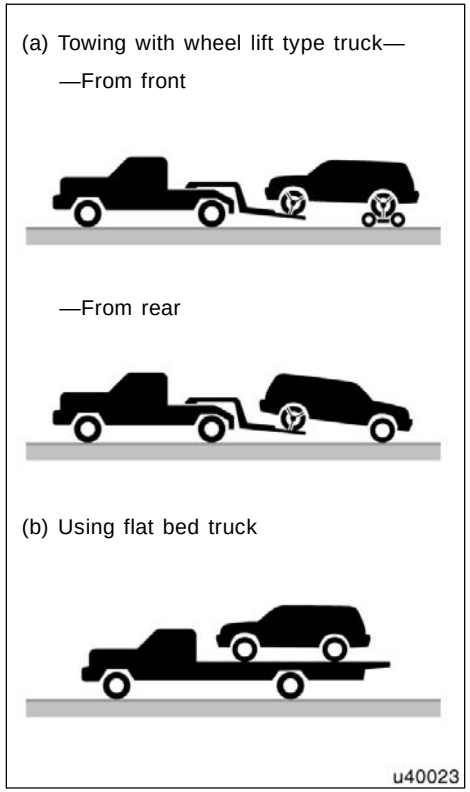

Two−wheel drive models

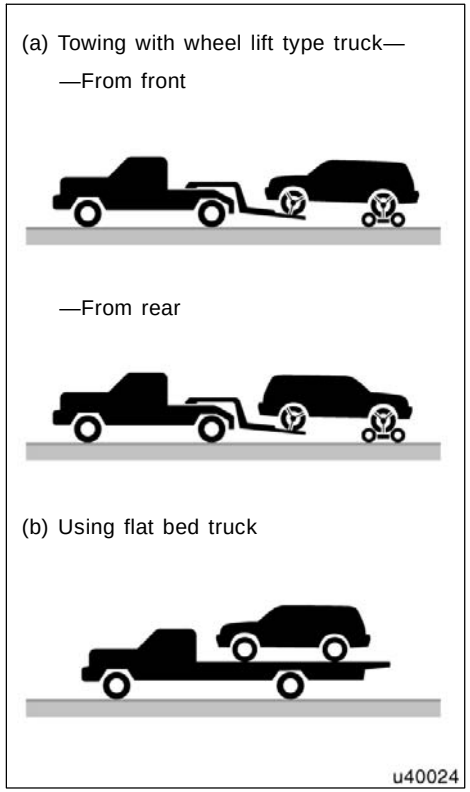

Four−wheel drive models

If towing is necessary, we recommended you have it done by your Toyota dealer or a commercial tow truck service. In consultation with them, have your vehicle towed using either (a) or (b).

Only when you cannot receive a towing service from a Toyota dealer or commercial tow truck service, tow your vehicle carefully in accordance with the instructions given in "—Emergency towing" on page 259 in this section.

Proper equipment will help ensure that your vehicle is not damaged while being towed. Commercial operators are generally aware of the state/provincial and local laws pertaining to towing.

Your vehicle can be damaged if it is towed incorrectly. Although most operators know the correct procedure, it is possible to make a mistake. To avoid damage to your vehicle, make sure the following precautions are observed. If necessary, show this page to the tow truck driver.

TOWING PRECAUTIONS:

Use a safety chain system for all towing, and abide by the state/provincial and local laws. The wheels and axle on the ground must be in good condition. If they are damaged, use a towing dolly.

Two−wheel drive models—

(a) Towing with wheel lift type truck

From front—

Use a towing dolly under the rear wheels.

NOTICE
Never tow a vehicle from the front with the rear wheels on the ground, as this may cause serious damage to the transmission.

From rear—

Place the ignition key in the “ACC” position.

NOTICE
◡ ***When lifting wheels, take care to ensure adequate ground clearance for towing at the opposite end of the raised vehicle. Otherwise, the bumper and/or underbody of the towed vehicle will be damaged during towing.*** ◡ ***Do not tow with the key removed or in the “LOCK” position, as the steering lock mechanism is not strong enough to hold the front wheels straight while towing.***

(b) Using flat bed truck

Four−wheel drive models—

(a) Towing with wheel lift type truck

From front—

Use a towing dolly under the rear wheels.

NOTICE
Never tow a vehicle from the front with the rear wheels on the ground, as this may cause serious damage to the transmission.

From rear—We recommend using a towing dolly under the front wheels. If you do not use a towing dolly, place the ignition key in the “ACC” position, put the transmission in neutral and the transfer in “H” (2WD mode).

NOTICE
Do not tow with the key removed or in the “LOCK” position when towing from the rear without a towing dolly. The steering lock mechanism is not strong enough to hold the front wheels straight.

(b) Using flat bed truck

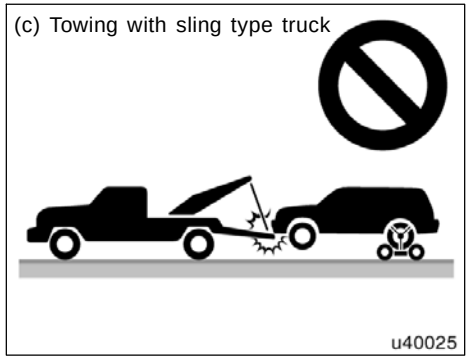

All models—

(c) Towing with sling type truck

NOTICE
Do not tow with sling type truck, either from the front or rear. This may cause body damage.

—Emergency towing

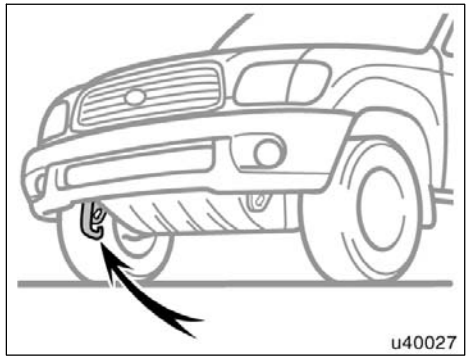

If towing is necessary, we recommend you to have it done by your Toyota dealer or a commercial tow truck service.

If towing service is not available in an emergency, your vehicle may be temporarily towed by a cable or chain secured to the emergency towing hook under the front of the vehicle. Use extreme caution when towing the vehicle.

NOTICE
Only use specified towing hook; otherwise your vehicle may be damaged.

A driver must be in the vehicle to steer it and operate the brakes.

Towing in this manner may be done only on hard−surfaced roads for a short distance and at low speeds. Also, the wheels, axles, drive train, steering and brakes must all be in good condition.

⚠ **CAUTION**
Use extreme caution when towing the vehicle. Avoid sudden starts or erratic driving maneuvers which would place excessive stress on the emergency towing hook and towing cable or chain. The hook and towing cable or chain may break and cause serious injury or damage.

NOTICE
Use only a cable or chain specifically intended for use in towing vehicles. Securely fasten the cable or chain to the towing hook provided.

Before towing, release the parking brake, put the transmission in “N” and as to the four−wheel drive models, moreover, set the transfer in “H” (2WD) mode. The key must be in “ACC” (engine off) or “ON” (engine running).

⚠ CAUTION

If the engine is not running, the power assist for the brakes and steering will not work so steering and braking will be much harder than usual.

—Emergency towing hook precautions

- Before emergency towing, check that the hook is not broken or damaged and that the installation bolts are not loose.
- Fasten the towing cable or chain securely to the hook.
- Do not jerk the hook. Apply steady and even force.
- To avoid damaging the hook, do not pull from the side or at a vertical angle. Always pull straight ahead.

⚠ CAUTION

If the emergency towing hook is used to get out when your vehicle becomes stuck in mud, sand or other condition from which the vehicle cannot be driven out under its own power, make sure to observe the precautions mentioned below. Otherwise, excessive stress will be put on the hook and the towing cable or chain may break, causing serious injury or damage.

- **If the towing vehicle can hardly move, do not forcibly continue the towing. Contact your Toyota dealer or a commercial tow truck service for assistance.**
- **Tow the vehicle as straight ahead as possible.**
- **Keep away from the vehicle during towing.**

—Tips for towing a stuck vehicle

The following methods are effective to get out when your vehicle is stuck in mud, sand or other condition from which the vehicle cannot be driven out under its own power. Use extreme caution when towing vehicles. In addition, keep away from the vehicles and towing cable or chain when towing.

- Remove the soil and sand in the front and the back of the tires.
- Place a stone or wood under the tires.

If you lose your keys

You can purchase a new key at your Toyota dealer if you can give them the key number and master key.

Even if you lose only one key, contact your Toyota dealer to make a new key. If you lose all your master keys, you cannot make new keys; the whole engine immobiliser system must be replaced.

See the suggestion given in “Keys” on page 8 in Section 1−2.

If your keys are locked in the vehicle and you cannot get a duplicate, many Toyota dealers can still open the door for you, using their special tools. If you must break a window to get in, we suggest breaking the smallest side window because it is the least expensive to replace. Be extremely cautious to avoid cuts from the glass.

If you lose your wireless remote control transmitter

Please contact your nearest Toyota dealer and you can purchase a new wireless remote control transmitter.

Have the registered identification numbers of your transmitters deleted from your vehicle by your Toyota dealer as soon as possible to avoid the possibility of theft or an accident. Then, have the identification number of your new transmitter registered. At the same time, you must bring all of the remaining transmitters to have them registered again as well.

SECTION 5

CORROSION PREVENTION AND APPEARANCE CARE

Protecting your Toyota from corrosion 264
Washing and waxing your Toyota 265
Cleaning the interior 267

Protecting your Toyota from corrosion

Toyota, through its diligent research, design and use of the most advanced technology available, has done its part to help prevent corrosion and has provided you with the finest quality vehicle construction. Now, it is up to you. Proper care of your Toyota can help ensure long–term corrosion prevention.

The most common causes of corrosion to your vehicle are:

- The accumulation of road salt, dirt and moisture in hard–to–reach areas under the vehicle.
- Chipping of paint, or undercoating caused by minor accidents or by stones and gravel.

Care is especially important if you live in particular areas or operate your vehicle under certain environmental conditions:

- Road salt or dust control chemicals will accelerate corrosion, as will the presence of salt in the air near the sea–coast or in areas of industrial pollution.
- High humidity accelerates corrosion especially when temperatures range just above the freezing point.
- Wetness or dampness to certain parts of your vehicle for an extended period of time, may cause corrosion even though other parts of the vehicle may be dry.
- High ambient temperatures can cause corrosion to those components of the vehicle which are prevented from quick–drying due to lack of proper ventilation.

The above signifies the necessity to keep your vehicle, particularly the underside, as clean as possible and to repair any damage to paint or protective coatings as soon as possible.

To help prevent corrosion on your Toyota, follow these guidelines:

Wash your vehicle frequently. It is, of course, necessary to keep your vehicle clean by regular washing, but to prevent corrosion, the following points should be observed:

- If you drive on salted roads in the winter or if you live near the ocean, you should hose off the undercarriage at least once a month to minimize corrosion.
- High pressure water or steam is effective for cleaning the vehicle's underside and wheel housings. Pay particular attention to these areas as it is difficult to see all the mud and dirt. It will do more harm than good to simply wet the mud and debris without removing them. The lower edge of doors, rocker panels and frame members have drain holes which should not be allowed to clog with dirt as trapped water in these areas can cause corrosion.
- Wash the underside of the vehicle thoroughly when winter is over.

See "Washing and waxing your Toyota" on page 265 in this section for more tips.

Check the condition of your vehicle's paint and trim. If you find any chips or scratches in the paint, touch them up immediately to prevent corrosion from starting. If the chips or scratches have gone through the bare metal, have a qualified body shop make the repair.

Check the interior of your vehicle. Water and dirt can accumulate under the floor mats and could cause corrosion. Occasionally check under the mats to make sure the area is dry. Be particularly careful when transporting chemicals, cleansers, fertilizers, salt, etc; these should be transported in proper containers. If a spill or leak should occur, immediately clean and dry the area.

Use mud shields on your wheels. If you drive on salted or gravel roads, mud shields help protect your vehicle. Full−size shields, which come as near to the ground as possible, are the best. We recommend that the fittings and the area where the shields are installed be treated to resist corrosion. Your Toyota dealer will be happy to assist in supplying and installing the shields if they are recommended for your area.

Keep your vehicle in a well ventilated garage or a roofed place. Do not park your vehicle in a damp, poorly ventilated garage. If you wash your vehicle in the garage, or if you drive it in covered with water or snow, your garage may be so damp it will cause corrosion. Even if your garage is heated, a wet vehicle can corrode if the ventilation is poor.

Washing and waxing your Toyota

Washing your Toyota

Keep your vehicle clean by regular washing.

The following cases may cause weakness to the paint or corrosion to the body and parts. Wash your vehicle as soon as possible.

- When driving in a coastal area
- When driving on a road sprinkled with antifreeze
- When having coal tar, tree sap, bird droppings and carcass of an insect
- When driving in the areas where there is a lot of smoke, soot, dust, iron dust and chemical substance
- When the vehicle becomes remarkably dirty with dust and mud

Hand−washing your Toyota

Work in the shade and wait until the vehicle body is not hot to the touch.

CAUTION

When cleaning under floor or chassis, be careful not to injure your hands.

1. Rinse off loose dirt with a hose. Remove any mud or road salt from the underside of the vehicle or in the wheel wells.
2. Wash with a mild car−wash soap, mixed according to the manufacturer's instructions. Use a soft cotton mitt and keep it wet by dipping it frequently into the wash water. Do not rub hard—let the soap and water remove the dirt.

Plastic wheel ornaments: The plastic wheel ornaments are damaged easily by organic substances. If any organic substances splashes an ornament, be sure to wash it off with water and check if the ornament is damaged.

CAUTION

Do not attach the heavily damaged plastic wheel ornament. It may fly off the wheel and cause accidents while the vehicle is moving.

Aluminum wheels: Use only a mild soap or neutral detergent.

Plastic bumpers: Wash carefully. Do not scrub with abrasive cleaners. The bumper faces are soft.

Road tar: Remove with turpentine or cleaners that are marked safe for painted surfaces.

NOTICE

Do not use organic substances (gasoline, kerosene, benzine or strong solvents), which may be toxic or cause damage.

3. Rinse thoroughly—dried soap can cause streaking. In hot weather you may need to rinse each section right after you wash it.
4. To prevent water spots, dry the vehicle using a clean soft cotton towel. Do not rub or press hard—you might scratch the paint.

Automatic car wash

Your vehicle may be washed in an automatic car wash, but remember that the paint can be scratched by some type of brushes, unfiltered washing water, or the washing process itself. Scratching reduces paint durability and gloss, especially on darker colors. The manager of the car wash should be able to advise you whether the process is safe for the paint on your vehicle.

NOTICE

To prevent damage to the antenna, make sure it is retracted before driving your Toyota through an automatic car wash.

Waxing your Toyota

Polishing and waxing is recommended to maintain the original beauty of your Toyota's finish.

Once a month or if the vehicle surface does not repel water well, apply wax.

1. Always wash and dry the vehicle before you begin waxing, even if you are using a combined cleaner and wax.
2. Use a good quality polish and wax. If the finish has become extremely weathered, use a car−cleaning polish, followed by a separate wax. Carefully follow the manufacturer's instructions and precautions. Be sure to polish and wax the chrome trim as well as the paint.
3. Wax the vehicle again when water does not bead but remains on the surface in large patches.

NOTICE

Always remove the plastic bumpers if your vehicle is re−painted and placed in a high heat paint waxing booth. High temperatures could damage the bumpers.

Cleaning the interior

⚠ CAUTION

- **Vehicles with side and curtain shield airbags:**

  Be careful not to splash water or spill liquid on the floor. This may prevent the side and curtain shield airbags from activating correctly, resulting in serious injury.

- **Do not wash the vehicle floor with water, or allow water to get onto the floor when cleaning the vehicle interior or exterior. Water may get into audio components or other electrical components above or under the floor carpet (or mat) and cause a malfunction; and it may cause body corrosion.**

Vinyl interior

The vinyl upholstery may be easily cleaned with a mild soap or detergent and water.

First vacuum over the upholstery to remove loose dirt. Then, using a sponge or soft cloth, apply the soap solution to the vinyl. After allowing it to soak in for a few minutes to loosen the dirt, remove the dirt and wipe off the soap with a clean damp cloth. If all the dirt does not come off, repeat the procedure. Commercial foaming−type vinyl cleaners are also available which work well. Follow the manufacturer's instructions.

NOTICE

Do not use solvent, thinner, gasoline or window cleaner on the interior.

Carpets

Use a good foam−type shampoo to clean the carpets.

Begin by vacuuming thoroughly to remove as much dirt as possible. Several types of foam cleaners are available; some are in aerosol cans and others are powders or liquids which you mix with water to produce a foam. To shampoo the carpets, use a sponge or brush to apply the foam. Rub in overlapping circles.

Do not apply water—the best results are obtained by keeping the carpet as dry as possible. Read the shampoo instructions and follow them closely.

Seat belts

The seat belts may be cleaned with mild soap and water or with lukewarm water.

Use a cloth or sponge. As you are cleaning, check the belts for excessive wear, fraying, or cuts.

NOTICE

- ***Do not use dye or bleach on the belts—it may weaken them.***
- ***Do not use the belts until they become dry.***

Windows

The windows may be cleaned with any household window cleaner.

NOTICE

When cleaning the inside of the rear window, be careful not to scratch or damage the heater wires or connectors.

Air conditioning control panel, car audio, instrument panel, console panel, and switches

Use a soft damp cloth for cleaning.

Soak a clean soft cloth in water or lukewarm water then lightly wipe off dirt.

NOTICE

- ***Do not use organic substances (solvents, kerosene, alcohol, gasoline, etc.) or alkaline or acidic solutions. These chemicals can cause discoloring, staining or peeling of the surface.***
- ***If you use cleaners or polishing agents, make sure their ingredients do not include the substances mentioned above.***
- ***If you use a liquid car freshener, do not apill the liquid onto the vehicle's interior surfaces. It may contain the ingredients mentioned above. Immediately clean any spill using the method mentioned above.***

Leather Interior

The leather upholstery may be cleaned with neutral detergent for wool.

Remove dirt using a soft cloth dampened with 5% solution of neutral detergent for wool. Then thoroughly wipe off all traces of detergent with a clean damp cloth.

After cleaning or whenever any part of the leather gets wet, dry with a soft clean cloth. Allow the leather to dry in a ventilated shaded area.

NOTICE

- ***If a stain should fail to come out with a neutral detergent, apply a cleaner that does not contain an organic solvent.***
- ***Never use organic substances such as benzine, alcohol or gasoline, or alkaline or acid solutions for cleaning the leather as these could cause discoloring.***
- ***Use of a nylon brush or synthetic fiber cloth, etc. may scratch the fine grained surface of the leather.***
- ***Mildew may develop on soiled leather upholstery. Be especially careful to avoid oil spots. Try to keep your upholstery always clean.***
- ***Long exposure to direct sunlight may cause the leather surface to harden and shrink. Keep your vehicle in a shaded area, especially in the summer.***

- ***The interior of your vehicle is apt to heat up on hot summer days, so avoid placing on the upholstery items made of vinyl or plastic or containing wax as these tend to stick to leather when warm.***
- ***Improper cleaning of the leather upholstery could result in discoloration or staining.***

If you have any questions about the cleaning of your Toyota, your local Toyota dealer will be pleased to answer them.

SECTION 6

VEHICLE MAINTENANCE AND CARE

Maintenance requirements 272
General maintenance 273
Does your vehicle need repairing? 275
Emissions Inspection and Maintenance (I/M) programs 276

For scheduled maintenance information, please refer to the “Scheduled Maintenance Guide” or “Owner’s Manual Supplement”.

Maintenance requirements

Your Toyota vehicle has been designed for fewer maintenance requirements with longer service intervals to save both your time and money. However, each regular maintenance, as well as day−to−day care, is more important than ever before to ensure smooth, and trouble−free, safe, and economical drivings.

It is the owner's responsibility to make sure the specified maintenance, including general maintenance service, is performed. Note that both the new vehicle and emission control system warranties specify that proper maintenance and care must be performed. See "Owner's Warranty Information Booklet" or "Owner's Manual Supplement" for complete warranty information.

General maintenance

General maintenance items are those day−to−day care practices that are important to your vehicle for proper operation. It is the owner's responsibility to ensure that the general maintenance items are performed regularly.

These checks or inspections can be done either by yourself or a qualified technician, or if you prefer, your Toyota dealer will be pleased to do them at a nominal cost.

Scheduled maintenance

The scheduled maintenance items listed in the "Scheduled Maintenance Guide" or "Owner's Manual Supplement" are those required to be serviced at regular intervals.

For details of your maintenance schedule, read the "Scheduled Maintenance Guide" or "Owner's Manual Supplement".

It is recommended that any replacement parts used for maintenance or for the repair of the emission control system be Toyota supplied.

The owner may elect to use non−Toyota supplied parts for replacement purposes without invalidating the emission control system warranty. However, use of replacement parts which are not of equivalent quality may impair the effectiveness of the emission control systems.

You may also elect to have maintenance, replacement, or repair of the emission control devices and system performed by any automotive repair establishment or individual without invalidating this warranty. See "Owner's Warranty Information Booklet" or "Owner's Manual Supplement" for complete warranty information.

Where to go for service?

Toyota technicians are well−trained specialists and are kept up to date with the latest service information through technical bulletins, service tips, and in−dealership training programs. They learn to work on Toyotas before they work on your vehicle, rather than while they are working on it.

You can be confident that your Toyota dealer's service department performs the best job to meet the maintenance requirements on your vehicle—reliably and economically.

Your copy of the repair order is proof that all required maintenance has been performed for warranty coverage. And if any problems should arise with your vehicle while under warranty, your Toyota dealer will promptly take care of it. Again, be sure to keep a copy of the repair order for any service performed on your Toyota.

What about do−it−yourself maintenance?

Many of the maintenance items are easy to do yourself if you have a little mechanical ability and a few basic automotive tools. Simple instructions for how to perform them are presented on page 277 in Section 7.

If you are a skilled do−it−yourself mechanic, the Toyota service manuals are recommended. Please be aware that do−it−yourself maintenance can affect your warranty coverage. See “Owner’s Warranty Information Booklet” or “Owner’s Manual Supplement” for the details.

General maintenance

Listed below are the general maintenance items that should be performed as frequently as specified. In addition to checking the items listed, if you notice any unusual noise, smell or vibration, you should investigate the cause or take your vehicle to your Toyota dealer or a qualified service shop immediately. It is recommended that any problem you notice be brought to the attention of your dealer or the qualified service shop for their advice.

⚠ CAUTION

Make these checks only where adequate ventilation can be obtained if you run the engine.

OUTSIDE THE VEHICLE

Items listed below should be performed from time to time, unless otherwise specified.

Tire pressure

Check the pressure with a gauge every two weeks, or at least once a month. See page 288 in Section 7−2 for additional information.

Tire surface and wheel nuts

Check the tires carefully for cuts, damage or excessive wear. See page 289 in Section 7−2 for additional information. When checking the tires, make sure no nuts are missing, and check the nuts for looseness. Tighten them if necessary.

Tire rotation

Rotate the tires according to the maintenance schedule. (For scheduled maintenance information, please refer to the “Scheduled Maintenance Guide” or “Owner’s Manual Supplement”.) See page 290 in Section 7−2 for additional information.

Fluid leaks

Check underneath for leaking fuel, oil, water or other fluid after the vehicle has been parked for a while. If you smell fuel fumes or notice any leak, have the cause found and corrected immediately.

Doors and engine hood

Check that all doors including back door operate smoothly and all latches lock securely. Make sure the engine hood secondary latch secures the hood from opening when the primary latch is released.

INSIDE THE VEHICLE

Items listed below should be checked regularly, e.g. while performing periodic services, cleaning the vehicle, etc.

Lights

Make sure the headlights, stop lights, tail lights, turn signal lights, and other lights are all working. Check headlight aim.

Service reminder indicators and warning buzzers

Check that all service reminder indicators and warning buzzers function properly.

Steering wheel

Check that it has the specified free play. Be alert for changes in steering condition, such as hard steering or strange noise.

Seats

Check that all seat controls such as seat adjusters, seatback recliner, etc. operate smoothly and that all latches lock securely in any position. Check that the head restraint move up and down smoothly and that the locks hold securely in any latched position. For folding−down rear seatbacks, swing−up rear seat cushions and detachable temporary third seat, check that the latches lock securely.

Seat belts

Check that the seat belt system such as buckles, retractors and anchors operate properly and smoothly. Make sure the belt webbing is not cut, frayed, worn or damaged.

Accelerator pedal

Check the pedal for smooth operation and uneven pedal effort or catching.

Brake pedal

Check the pedal for smooth operation and that the pedal has the proper clearance. Check the brake booster function.

Brakes

At a safe place, check that the brakes do not pull to one side when applied.

Parking brake

Check that the pedal has the proper travel and that, on a safe incline, your vehicle is held securely with only the parking brake applied.

Automatic transmission “Park” mechanism

Check the lock release button of the selector lever for proper and smooth operation. On a safe incline, check that your vehicle is held securely with the selector lever in “P” position and all brakes released.

IN THE ENGINE COMPARTMENT

Items listed below should be checked from time to time, e.g. each time when refueling.

Washer fluid

Make sure there is sufficient fluid in the tank. See page 299 in Section 7−3 for additional information.

Engine coolant level

Make sure the coolant level is between the “F” and “L” lines on the see−through reservoir when the engine is cold. See page 285 in Section 7−2 for additional information.

Radiator, condenser and hoses

Check that the front of the radiator and condenser are clean and not blocked with leaves, dirt, or insects. See page 286 in Section 7−2 for additional information.

Battery condition

Check the battery condition by the indicator color. See page 296 in Section 7−3 for additional information.

Brake fluid level

Make sure the brake fluid level is correct. See page 287 in Section 7−2 for additional information.

Engine oil level

Check the level on the dipstick with the engine turned off and the vehicle parked on a level spot. See page 284 in Section 7−2 for additional information.

Power steering fluid level

Check the level through the reservoir. The level should be in the “HOT” or “COLD” range depending on the fluid temperature. See page 287 in Section 7−2 for additional information.

Exhaust system

If you notice any change in the sound of the exhaust or smell exhaust fumes, have the cause located and corrected immediately. (See “Engine exhaust cautions” on page 217 in Section 2.)

Does your vehicle need repairing?

Be on the alert for changes in performance, sounds, and visual tip−offs that indicate service is needed. Some important clues are as follows:

- Engine missing, stumbling, or pinging
- Appreciable loss of power
- Strange engine noises
- A leak under the vehicle (however, water dripping from the air conditioning after use is normal.)
- Change in exhaust sound (This may indicate a dangerous carbon monoxide leak. Drive with the windows open and have the exhaust system checked immediately.)
- Flat−looking tire; excessive tire squeal when cornering; uneven tire wear
- Vehicle pulls to one side when driving straight on a level road
- Strange noises related to suspension movement
- Loss of brake effectiveness; spongy feeling brake or clutch pedal; pedal almost touches floor; vehicle pulls to one side when braking
- Engine coolant temperature continually higher than normal
- Engine continually runs hot; oil pressure gauge stays low.

If you notice any of these clues, take your vehicle to your Toyota dealer as soon as possible. It probably needs adjustment or repair.

⚠ CAUTION

Do not continue driving with the vehicle unchecked. It could result in serious vehicle damage and possibly personal injury.

Emissions Inspection and Maintenance (I/M) programs

Some states have vehicle emission inspection programs which include OBD (On−Board Diagnostics) checks.

The OBD system monitors the operation of the emission control system. When the OBD system determines that a problem exists somewhere in the emission control system, the malfunction indicator lamp comes on. In this case, your vehicle may not pass the I/M test and need to be repaired. Contact your Toyota dealer to service the vehicle.

Even if the malfunction indicator lamp does not come on, your vehicle may not pass the I/M test as readiness codes have not been set in the OBD system.

Readiness codes are automatically set during ordinary driving. However, when the battery is disconnected or run down, the codes are erased. Also, depending on your driving habits, the codes may not be completely set.

Also, if the malfunction indicator lamp had come on recently due to temporary malfunction such as a loose fuel tank cap, your vehicle may not pass the I/M test.

The malfunction indicator lamp will go off after taking several driving trips, but the error code in the OBD system will not be cleared unless about 40 trips or more are taken.

If your vehicle does not pass the I/M test even the malfunction indicator lamp does not come on, contact your Toyota dealer to prepare the vehicle for re−testing.

SECTION 7–1

DO–IT–YOURSELF MAINTENANCE

Introduction

Engine compartment overview 278
Fuse locations 279
Do–it–yourself service precautions 280
Parts and tools 281

Engine compartment overview

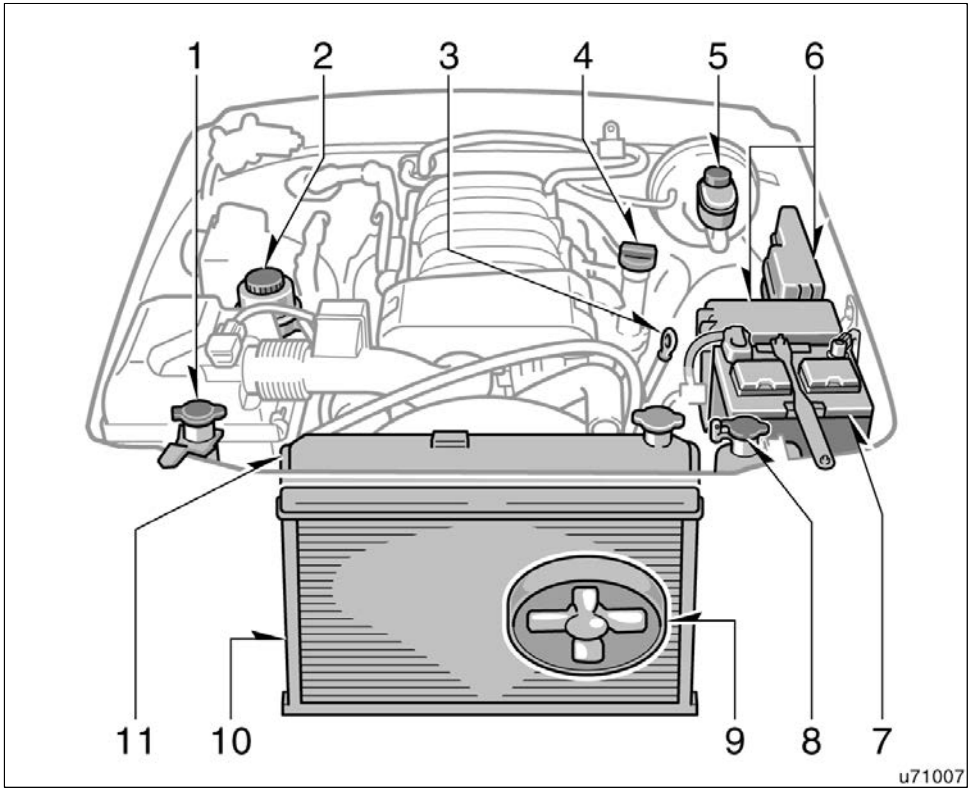

1. Windshield and back window washer fluid tank
2. Power steering fluid reservoir
3. Engine oil level dipstick
4. Engine oil filler cap
5. Brake fluid reservoir
6. Fuse blocks
7. Battery
8. Engine coolant reservoir
9. Electric cooling fan
10. Condenser
11. Radiator

Fuse locations

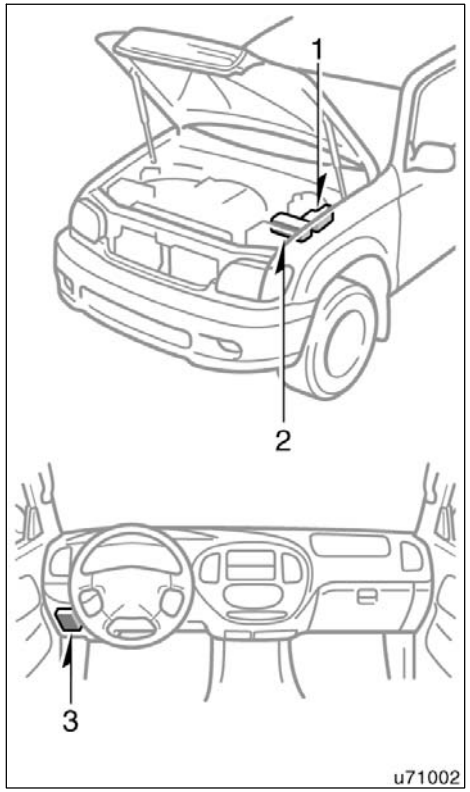

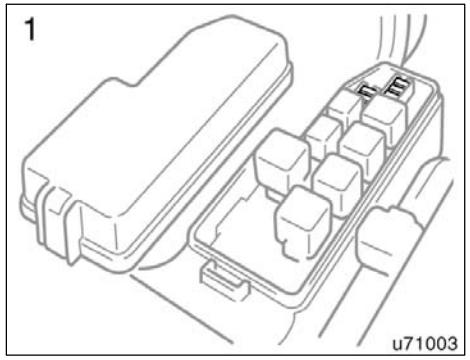

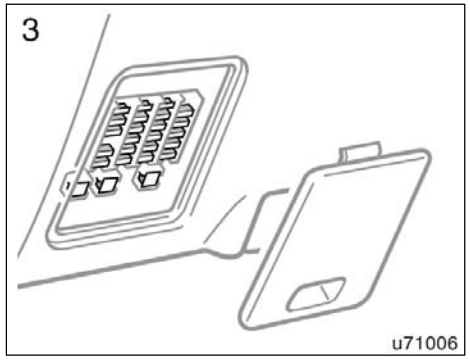

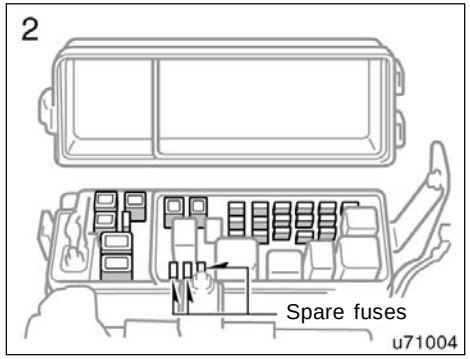

Do−it−yourself service precautions

If you perform maintenance by yourself, be sure to follow the correct procedure given in this section.

You should be aware that improper or incomplete servicing may result in operating problems.

Performing do−it−yourself maintenance during the warranty period may affect your warranty coverage. Read the separate Toyota Warranty statement for details and suggestions.

This section gives instructions only for those items that are relatively easy for an owner to perform. As explained in Section 6, there are still a number of items that must be done by a qualified technician with special tools.

For information on tools and parts for do−it−yourself maintenance, see “Parts and tools”.

Utmost care should be taken when working on your vehicle to prevent accidental injury. Here are a few precautions that you should be especially careful to observe:

⚠ CAUTION

- **When the engine is running, keep hands, clothing, and tools away from the moving fan and engine drive belts. (Removing rings, watches, and ties is advisable.)**
- **Right after driving, the engine compartment—the engine, radiator, exhaust manifold, power steering fluid reservoir and spark plug boots, etc.—will be hot. So be careful not to touch them. Oil, fluids and spark plugs may also be hot.**
- **If the engine is hot, do not remove the radiator cap or loosen the drain plugs to prevent burning yourself.**
- **Do not smoke, cause sparks or allow open flames around fuel or the battery. Their fumes are flammable.**
- **Do not get under your vehicle with just the body jack supporting it. Always use automotive jack stands or other solid supports.**
- **Use eye protection whenever you work on or under your vehicle where you may be exposed to flying or falling material, fluid spray, etc.**
- **Used engine oil contains potentially harmful contaminants which may cause skin disorders such as inflammation or skin cancer, so care should be taken to avoid prolonged and repeated contact with it. To remove used engine oil from your skin, wash thoroughly with soap and water.**
- **Do not leave used oil within the reach of children.**
- **Dispose of used oil and filter only in a safe and acceptable manner. Do not dispose of used oil and filter in household trash, in sewers or onto the ground. Call your dealer or a service station for information concerning recycling or disposal.**
- **Be extremely cautious when working on the battery. It contains poisonous and corrosive sulfuric acid.**
- **Warning: Battery posts, terminals and related accessories contain lead and lead compounds, chemicals known to the State of California to cause cancer and reproductive harm. Wash hands after handling.**

NOTICE

- ***Remember that battery and ignition cables carry high currents or voltages. Be careful of accidentally causing a short circuit.***
- ***Add only demineralized or distilled water to fill the radiator. And if you spill some of the coolant, be sure to wash it off with water to prevent it from damaging the parts or paint.***
- ***Do not allow dirt or anything else to fall through the spark plug holes.***
- ***Do not pry the outer electrode of a spark plug against the center electrode.***
- ***Use only spark plugs of the specified type. Using other types will cause engine damage, loss of performance or radio noise.***
- ***Do not overfill automatic transmission fluid, or the transmission could be damaged.***
- ***Do not drive with the air cleaner filter removed, or excessive engine wear could result. Also backfiring could cause a fire in the engine compartment.***
- ***Be careful not to scratch the glass surface with the wiper frame.***
- ***When closing the engine hood, check to see that you have not forgotten any tools, rags, etc.***

Parts and tools

Here is a list of parts and tools you will need on performing do−it−yourself maintenance. Remember all Toyota parts are designed in metric sizes, so your tools must be metric.

CHECKING THE ENGINE OIL LEVEL

Parts (if level is low):

- Engine oil API grade SJ, “Energy−Conserving” or ILSAC multigrade having viscosity proper for your climate

Tools:

- Rag or paper towel
- Funnel (only for adding oil)

CHECKING THE ENGINE COOLANT LEVEL

Parts (if level is low):

- “TOYOTA Long Life Coolant” or equivalent
  See page 285 in Section 7−2 for details about coolant type selection.
- Demineralized or distilled water

Tools:

- Funnel (only for adding coolant)

CHECKING BRAKE FLUID

Parts (if level is low):

à SAE J1703 or FMVSS No.116 DOT 3 brake fluid

Tools:

à Rag or paper towel

à Funnel (only for adding fluid)

CHECKING POWER STEERING FLUID

Parts (if level is low):

à Automatic transmission fluid DEXRON″ II or III

Tools:

à Rag or paper towel

à Funnel (only for adding fluid)

CHECKING BATTERY CONDITION

Tools:

à Warm water

à Baking soda

à Grease

à Conventional wrench (for terminal clamp bolts)

CHECKING AND REPLACING FUSES

Parts (if replacement is necessary):

à Fuse with same amperage rating as original

Tools:

à Conventional wrench (for instrument lower panel nut)

ADDING WASHER FLUID

Parts:

à Water

à Washer fluid containing antifreeze (for winter use)

Tools:

à Funnel

REPLACING LIGHT BULBS

Parts:

à Bulb with same number and wattage rating as original (See charts in “Replacing light bulbs” on page 300 in Section 7−3.)

Tools:

à Screwdriver

SECTION 7–2

DO–IT–YOURSELF MAINTENANCE

Engine and Chassis

Checking the engine oil level 284
Checking the engine coolant level 285
Checking the radiator and condenser 286
Checking brake fluid 287
Checking power steering fluid 287
Checking tire pressure 288
Checking and replacing tires 289
Rotating tires 290
Installing snow tires and chains 291
Replacing wheels 292
Aluminum wheel precautions 293

Checking the engine oil level

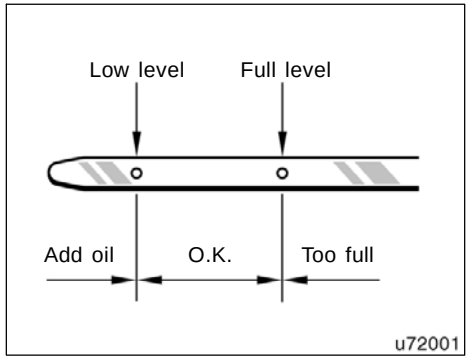

With the engine at operating temperature and turned off, check the oil level on the dipstick.

1. To get a true reading, the vehicle should be on a level spot. After turning off the engine, wait a few minutes for the oil to drain back into the bottom of the engine.
2. Pull out the dipstick, and wipe it clean with a rag.
3. Reinsert the dipstick—push it in as far as it will go, or the reading will not be correct.
4. Pull the dipstick out and look at the oil level on the end.

⚠ CAUTION

Be careful not to touch the hot exhaust manifold.

If the oil level is below or only slightly above the low level, add engine oil of the same type as already in the engine.

Remove the oil filler cap and add engine oil in small quantities at a time, checking the dipstick.

The approximate quantity of oil needed to fill between the low level and the full level on the dipstick is indicated below for reference.

When the level reaches within the correct range, install the filler cap hand−tight.

Oil quantity, L (qt., Imp. qt.):
1.5 (1.6, 1.3)

NOTICE

- ***Avoid overfilling, or the engine could be damaged.***
- ***Check the oil level on the dipstick once again after adding the oil.***

ENGINE OIL SELECTION

Use API grade SJ or SL, “Energy−Conserving” or ILSAC multigrade engine oil.

Recommended viscosity (SAE):

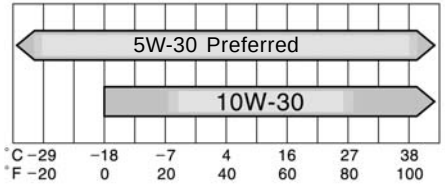

Temperature range anticipated before next oil change

OIL005

SAE 5W−30 is the best choice for your vehicle, for good fuel economy and good starting in cold weather.

If you use SAE 10W−30 engine oil in extremely low temperatures, the engine may become difficult to start, so SAE 5W−30 engine oil is recommended.

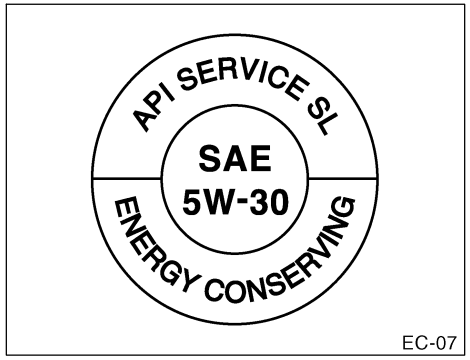

API service symbol

ILSAC certification mark

Oil identification marks

Either or both API registered marks are added to some oil containers to help you select the oil you should use.

The API Service Symbol is located anywhere on the outside of the container.

The top portion of the label shows the oil quality by API (American Petroleum Institute) designations such as SL. The center portion of the label shows the SAE viscosity grade such as SAE 5W−30. “Energy−Conserving” shown in the lower portion, indicates that the oil has fuel−saving capabilities.

The ILSAC (International Lubricant Standardization and Approval Committee) Certification Mark is displayed on the front of the container.

Checking the engine coolant level

Look at the see−through coolant reservoir when the engine is cold. The coolant level is satisfactory if it is between the “F” and “L” lines on the reservoir. If the level is low, add ethylene−glycol type coolant for a proper corrosion protection of aluminum components.

The coolant level in the reservoir will vary with engine temperature. However, if the level is on or below the “L” line, add coolant. Bring the level up to the “F” line.

Always use ethylene−glycol type coolant for a proper corrosion protection of aluminum components. See information in the next column.

If the coolant level drops within a short time after replenishing, there may be a leak in the system. Visually check the radiator, hoses, radiator cap and drain cock and water pump.

If you can find no leak, have your Toyota dealer test the cap pressure and check for leaks in the cooling system.

⚠ CAUTION

To prevent burning yourself, do not remove the radiator cap when the engine is hot.

Coolant type selection

Use of improper coolants may damage your engine cooling system. Your coolant must contain ethylene−glycol type coolant for a proper corrosion protection of your engine that contains aluminum components. Use “TOYOTA Long Life Coolant” or equivalent.

In addition to preventing freezing and subsequent damage to the engine, this type of coolant will also prevent corrosion. Further supplemental inhibitors or additives are neither needed nor recommended.

Read the coolant container for information on freeze protection. Follow the manufacturer’s directions for how much to mix with plain water (preferably demineralized water or distilled water). The total capacity of the cooling system is given on page 309 in Section 8.

We recommend to use 50% solution for your Toyota, to provide protection down to about −35°C (−31°F). When it is extremely cold, to provide protection down to about −50°C (−58°F), 60% solution is recommended. Do not use more than 70% solution for better coolant performance.

NOTICE

Do not use alcohol type antifreeze or plain water alone.

Checking the radiator and condenser

If any of the above parts are extremely dirty or you are not sure of their condition, take your vehicle to Toyota dealer.

⚠ CAUTION

To prevent yourself from burning, be careful not to touch the radiator or condenser when the engine is hot.

NOTICE

To prevent damage to the radiator and condenser, do not perform the work by yourself.

Checking brake fluid

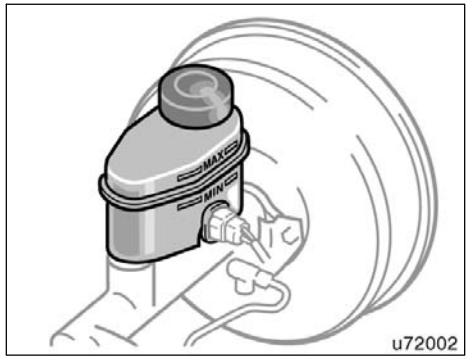

To check the fluid level, simply look at the see–through reservoir. The level should be between the "MAX" and "MIN" lines on the reservoir.

It is normal for the brake fluid level to go down slightly as the brake pads wear. So be sure to keep the reservoir filled.

If the reservoir needs frequent refilling, it may indicate a serious mechanical problem.

If the level is low, add SAE J1703 or FMVSS No.116 DOT 3 brake fluid to the brake reservoir.

Remove and replace the reservoir cap by hand. Fill the brake fluid to the dotted line. This brings the fluid to the correct level when you put the cap back on.

Use only newly opened brake fluid. Once opened, brake fluid absorbs moisture from the air, and excess moisture can cause a dangerous loss of braking.

⚠ CAUTION

Take care when filling the reservoir because brake fluid can harm your eyes and damage painted surfaces. If fluid gets in your eyes, flush your eyes with clean water immediately. If you still feel uncomfortable with your eyes, go to the doctor.

NOTICE

If you spill the fluid, be sure to wash it off with water to prevent it from damaging the parts or paint.

Checking power steering fluid

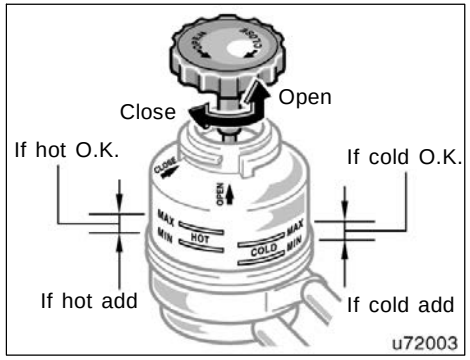

Check the fluid level through the reservoir. If necessary, add automatic transmission fluid DEXRON™ II or III.

If the vehicle has been driven around 80 km/h (50 mph) for 20 minutes (a little more in frigid temperatures), the fluid is hot (60°C—80°C or 140°F—175°F). You may also check the level when the fluid is cold (about room temperature, 10°C—30°C or 50°F—85°F) if the engine has not been run for about five hours.

Clean all dirt from outside of the reservoir tank and look at the fluid level. If the fluid is cold, the level should be in the “COLD” range. Similarly, if it is hot, the fluid level should be in the “HOT” range. If the level is at the low side of either range, add automatic transmission fluid DEXRON″ II or III to bring the level within the range.

To remove the reservoir cap, turn it counterclockwise and lift up. To reinstall it, turn it clockwise. After replacing the reservoir cap, visually check the steering box case, vane pump and hose connections for leaks or damage.

⚠ CAUTION

The reservoir tank may be hot so be careful not to burn yourself.

NOTICE

Avoid overfilling, or the power steering could be damaged.

Checking tire pressure

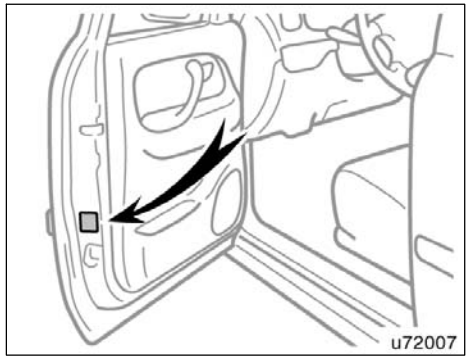

Keep your tire pressures at the proper level.

The recommended cold tire pressures, tire size and the vehicle capacity weight are given on page 308 and 312 in Section 8. The recommended cold tire pressures and tire size are also on the tire pressure label as shown.

You should check the tire pressures every two weeks, or at least once a month. And do not forget the spare!

Incorrect tire pressure can reduce tire life and make your vehicle less safe to drive.

Low tire pressure results in excessive wear, poor handling, reduced fuel economy, and the possibility of blowouts from overheated tires. Also, low tire pressure can cause poor sealing of the tire bead. If the tire pressure is excessively low, there is the possibility of wheel deformation and/or tire separation.

High tire pressure produces a harsh ride, handling problems, excessive wear at the center of the tire tread, and a greater possibility of tire damage from road hazards.

If a tire frequently needs refilling, have it checked by your Toyota dealer.

The following instructions for checking tire pressure should be observed:

- **The pressure should be checked only when the tires are cold.** If your vehicle has been packed for at least 3 hours and has not been driven for more than 1.5 km or 1 mile since, you will get an accurate cold tire pressure reading.

- **Always use a tire pressure gauge.** The appearance of a tire can be misleading. Besides, tire pressures that are even just a few pounds off can degrade ride and handling.
- **Do not bleed or reduce tire pressure after driving.** It is normal for the tire pressure to be higher after driving.
- **Never exceed the vehicle capacity weight.** The passenger and luggage weight should be located so that the vehicle is balanced.
- **Be sure to reinstall the tire inflation valve caps.** Without the valve caps, dirt or moisture could get into the valve core and cause air leakage. If the caps have been lost, have new ones put on as soon as possible.

Checking and replacing tires

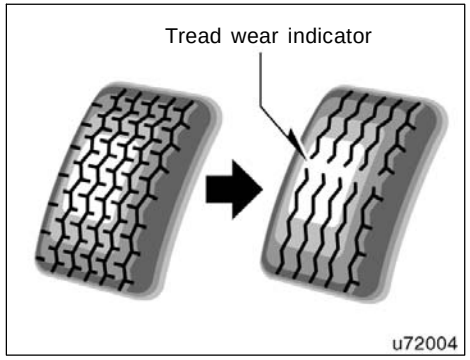

CHECKING YOUR TIRES

Check the tire tread for the tread wear indicators. If the indicators show, replace the tires.

The tires on your Toyota have built–in tread wear indicators to help you know when the tires need replacement. When the tread depth wears to 1.6 mm (0.06 in.) or less, the indicators will appear. If you can see the indicators in two or more adjacent grooves, the tire should be replaced. The lower the tread, the higher the risk of skidding.

The effectiveness of snow tires is lost if the tread wears down below 4 mm (0.16 in.).

Check the tires regularly for damage such as cuts, splits and cracks. If any damage is found, consult with a technician and have the tire repaired or replaced.

Even if the damage does not appear serious, a qualified technician should examine the damage. Objects which have penetrated the tire may have caused internal damage.

Any tires which are over 6 years old must be checked by a qualified technician even if damage is not obvious.

Tires deteriorate with age even if they have never or seldom been used.

This also applies to the spare tire and tires stored for future use.

REPLACING YOUR TIRES

When replacing a tire, use only the same size and construction as originally installed and with the same or greater load capacity.

Using any other size or type of tire may seriously affect handling, ride, speedometer/odometer calibration, ground clearance, and clearance between the body and tires or snow chains.

CAUTION

- **Do not mix radial, bias belted, or bias–ply tires on your vehicle. It can cause dangerous handling characteristics, resulting in loss of control.**
- **Do not use tires or wheels other than the manufacture's recommended size.**

For vehicles with vehicle skid control system—

- **Do not use tires of different brands, sizes and constructions. This may damage the drive system and prevent the vehicle stability control system from functioning correctly.**

Toyota recommends all four tires, or at least both front or rear tires be replaced as a set.

See "If you have a flat tire" on page 249 in Section 4 for tire change procedure.

When a tire is replaced, the wheel should always be balanced.

An unbalanced wheel may affect vehicle handling and tire life. Wheels can get out of balance with regular use and should therefore be balanced occasionally.

When replacing a tubeless tire, the air valve should also be replaced with a new one.

Rotating tires

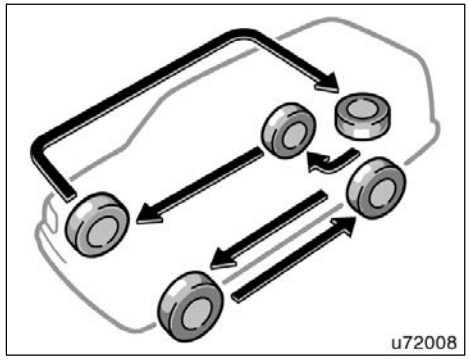

With a spare tire of the same wheel type as the installed tires

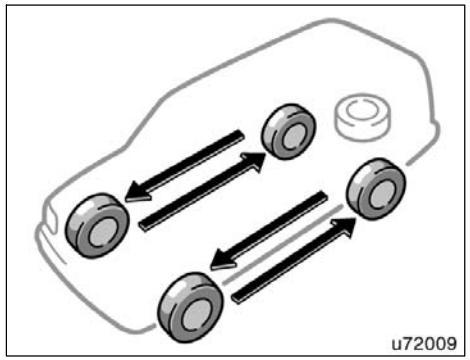

With a spare tire of different wheel type from the installed tires

To equalize the wear and help extend tire life, Toyota recommends that you rotate your tires according to the maintenance schedule. (For scheduled maintenance information, please refer to the "Scheduled Maintenance Guide" or "Owner's Manual Supplement".) However, the most appropriate timing for tire rotation may vary according to your driving habits and road surface conditions.

See "If you have a flat tire" on page 249 in Section 4 for tire change procedure.

When rotating tires, check for uneven wear and damage. Abnormal wear is usually caused by incorrect tire pressure, improper wheel alignment, out−of−balance wheels, or severe braking.

Installing snow tires and chains

WHEN TO USE SNOW TIRES OR CHAINS

Snow tires or chains are recommended when driving on snow or ice.

On wet or dry roads, conventional tires provide better traction than snow tires.

SNOW TIRE SELECTION

If you need snow tires, select the same size, construction and load capacity as the original tires on your Toyota.

Do not use tires other than those mentioned above. Do not install studded tires without first checking local regulations for possible restrictions.

SNOW TIRE INSTALLATION

Snow tires should be installed on all wheels.

Installing snow tires on the front wheels only can lead to an excessive difference in road grip capability between the front and rear tires which could cause loss of vehicle control.

When storing removed tires, you should store them in a cool dry place.

Mark the direction of rotation and be sure to install them in the same direction when replacing.

⚠ CAUTION

- **Do not drive with the snow tires incorrectly inflated.**
- **Never drive over 120 km/h (75 mph) with any type of snow tires.**

TIRE CHAIN SELECTION

Use the tire chains of correct size.

Regulations regarding the use of tire chains vary according to location or type of road, so always check them before installing chains.

CHAIN INSTALLATION

Install the chains on the rear tires as tightly as possible. Do not use tire chains on the front tires. Retighten chains after driving 0.5—1.0 km (1/4—1/2 mile).

When installing chains on your tires, carefully follow the instructions of the chain manufacturer.

If wheel covers are used, they will be scratched by the chain band, so remove the covers before putting on the chains.

⚠ CAUTION

- **Do not exceed 50 km/h (30 mph) or the chain manufacturer's recommended speed limit, whichever is lower.**
- **Drive carefully avoiding bumps, holes, and sharp turns, which may cause the vehicle to bounce.**
- **Avoid sharp turns or locked–wheel braking, as use of chains may adversely affect vehicle handling.**
- **When driving with chains installed, be sure to drive carefully. Slow down before entering the curves to avoid losing control of the vehicle. Otherwise an accident may occur.**

Replacing wheels

WHEN TO REPLACE YOUR WHEELS

If you have wheel damage such as bending, cracks or heavy corrosion, the wheel should be replaced.

If you fail to replace damaged wheels, the tire may slip off the wheel or cause loss of handling control.

WHEEL SELECTION

When replacing wheels, care should be taken to ensure that the wheels are replaced by ones with the same load capacity, diameter, rim width, and offset.

Correct replacement wheels are available at your Toyota dealer.

A wheel of a different size or type may adversely affect handling, wheel and bearing life, brake cooling, speedometer/odometer calibration, stopping ability, headlight aim, bumper height, vehicle ground clearance, and tire or snow chain clearance to the body and chassis.

Replacement with used wheels is not recommended as they may have been subjected to rough treatment or high mileage and could fail without warning. Also, bent wheels which have been straightened may have structural damage and therefore should not be used. Never use an inner tube in a leaking wheel which is designed for a tubeless tire.

Aluminum wheel precautions

- When installing aluminum wheels, check that the wheel nuts are tight after driving your vehicle the first 1600 km (1000 miles).
- If you have rotated, repaired or changed your tires, check that the wheel nuts are still tight after driving 1600 km (1000 miles).
- When using tire chains, be careful not to damage the aluminum wheels.
- Use only the Toyota wheel nuts and wrench designed for your aluminum wheels.
- When balancing your wheels, use only Toyota balance weights or equivalent and a plastic or rubber hammer.
- As with any wheel, periodically check your aluminum wheels for damage. If damaged, replace immediately.

SECTION 7-3

DO−IT−YOURSELF MAINTENANCE

Electrical components

Checking battery condition 296
Battery recharging precautions 297
Checking and replacing fuses 298
Adding washer fluid 299
Replacing light bulbs 300

Checking battery condition——Precautions

⚠ CAUTION

BATTERY PRECAUTIONS

The battery produces flammable and explosive hydrogen gas.

- **Do not cause a spark from the battery with tools.**
- **Do not smoke or light a match near the battery.**

The electrolyte contains poisonous and corrosive sulfuric acid.

- **Avoid contact with eyes, skin or clothes.**
- **Never ingest electrolyte.**
- **Wear protective safety glasses when working near the battery.**
- **Keep children away from the battery.**

EMERGENCY MEASURES

- **If electrolyte gets in your eyes, flush your eyes with clean water immediately and get immediate medical attention. If possible, continue to apply water with a sponge or cloth while en route to the medical office.**
- **If electrolyte gets on your skin, thoroughly wash the contact area. If you feel pain or burning, get medical attention immediately.**
- **If electrolyte gets on your clothes, there is a possibility of its soaking through to your skin, so immediately take off the exposed clothing and follow the procedure above, if necessary.**
- **If you accidentally swallow electrolyte, drink a large quantity of water or milk. Follow with milk of magnesia, beaten raw egg or vegetable oil. Then go immediately for emergency help.**
- **Warning: Battery posts, terminals and related accessories contain lead and lead compounds, chemicals known to the State of California to cause cancer and reproductive harm. Wash hands after handling.**

—Checking battery exterior

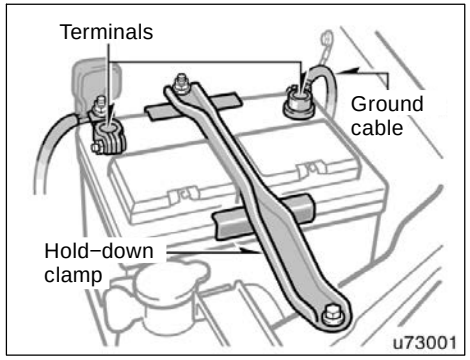

Check the battery for corroded or loose terminal connections, cracks, or loose hold−down clamp.

a. If the battery is corroded, wash it off with a solution of warm water and baking soda. Coat the outside of the terminals with grease to prevent further corrosion.

b. If the terminal connections are loose, tighten their clamp nuts—but do not overtighten.

c. Tighten the hold−down clamp only enough to keep the battery firmly in place. Overtightening may damage the battery case.

NOTICE

- ***Be sure the engine and all accessories are off before performing maintenance.***
- ***When checking the battery, remove the ground cable from the negative terminal ("–" mark) first and reinstall it last.***
- ***Be careful not to cause a short circuit with tools.***
- ***Take care no solution gets into the battery when washing it.***

—Checking battery condition

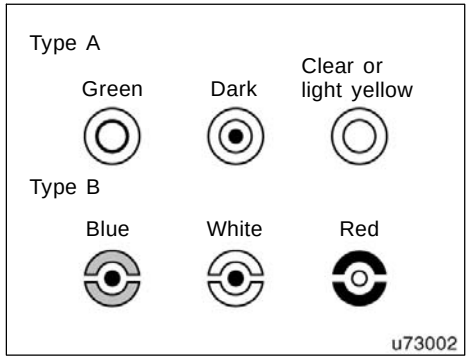

CHECKING BY INDICATOR

Check the battery condition by the indicator color.

Indicator color		Condition
Type A	Type B	
Green	Blue	Good
Dark	White	Charging necessary. Have battery checked by your Toyota dealer.
Clear or light yellow	Red	Have battery checked by your Toyota dealer.

Battery recharging precautions

During recharging, the battery is producing hydrogen gas.

Therefore, before recharging:

1. If recharging with the battery installed on the vehicle, be sure to disconnect the ground cable.
2. Be sure the power switch on the recharger is off when connecting the charger cables to the battery and when disconnecting them.

⚠ CAUTION

- **Always charge the battery in an unconfined area. Do not charge the battery in a garage or closed room where there is not sufficient ventilation.**
- **Only do a slow charge (5 A or less). Charging at a quicker rate is dangerous. The battery may explode, causing personal injuries.**

Checking and replacing fuses

NOTICE
Never recharge the battery while the engine is running. Also, be sure all accessories are turned off.

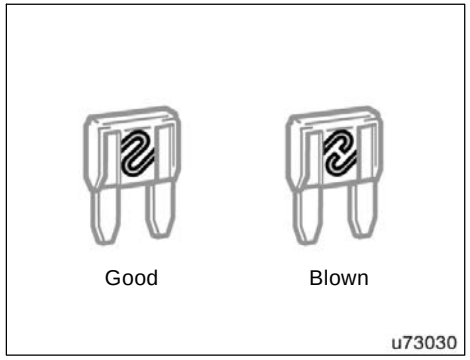

Type A

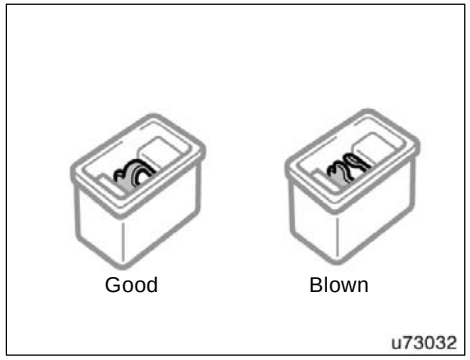

Type C

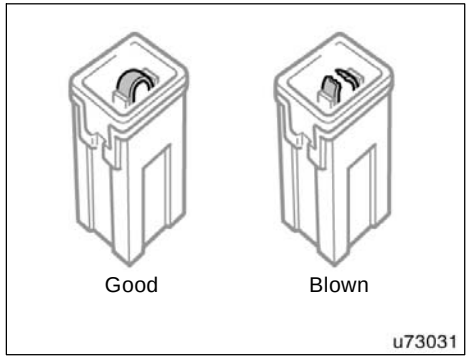

Type B

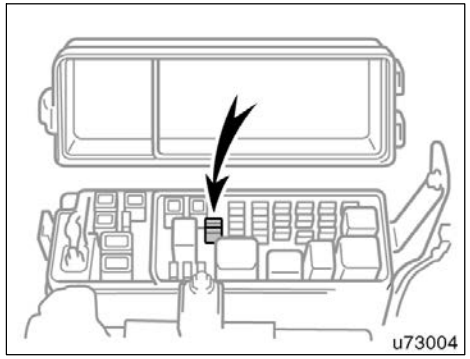

If the headlights or other electrical components do not work, check the fuses. If any of the fuses are blown, they must be replaced.

See “Fuse locations” on page 279 in Section 7−1 for locations of the fuses.

Turn the ignition switch and inoperative component off. Pull a suspected fuse straight out and check it.

Determine which fuse may be causing the problem. The lid of the fuse box shows the name of the circuit for each fuse. See page 312 in Section 8 of this manual for the functions controlled by each circuit.

Type A fuses can be pulled out by using the pull−out tool. The location of the pull−out tool is shown in the illustration.

If you are not sure whether the fuse has blown, try replacing the suspected fuse with one that you know is good.

If the fuse has blown, push a new fuse into the clip.

Only install a fuse with the amperage rating designated on the fuse box lid.

If you do not have a spare fuse, in an emergency you can pull out the “DOME” or “RAD” fuse, which may be dispensable for normal driving, and use it if its amperage rating is the same.

If you cannot use one of the same amperage, use one that is lower, but as close as possible to the rating. If the amperage is lower than that specified, the fuse might blow out again but this does not indicate anything wrong. Be sure to get the correct fuse as soon as possible and return the substitute to its original clip.

It is a good idea to purchase a set of spare fuses and keep them in your vehicle for emergencies.

If a new fuse immediately blows out, there is a problem with the electrical system. Have your Toyota dealer correct it as soon as possible.

CAUTION

Never use a fuse with a higher amperage rating, or any other object, in place of a fuse. This may cause extensive damage and possibly a fire.

Adding washer fluid

If any washer does not work or low windshield washer fluid level warning light comes on, the washer tank may be empty. Add washer fluid.

You may use plain water as washer fluid. However, in cold areas where temperatures range below freezing point, use washer fluid containing antifreeze. This product is available at your Toyota dealer and most auto parts stores. Follow the manufacturer’s directions for how much to mix with water.

NOTICE

Do not use engine antifreeze or any other substitute because it may damage your vehicle’s paint.

Replacing light bulbs—

The following illustrations show how to gain access to the bulbs. When replacing a bulb, make sure the ignition switch and light switch are off. Use bulbs with the wattage ratings given in the table.

⚠ CAUTION

- **To prevent yourself from burning, do not replace the light bulbs while they are hot.**
- **Halogen bulbs have pressurized gas inside and require special handling. They can burst or shatter if scratched or dropped. Hold a bulb only by its plastic or metal case. Do not touch the glass part of a bulb with bare hands.**

NOTICE

Only use a bulb of the listed type.

Light bulbs	Bulb No.	W	Type
Headlights	—	60/55	A
Front fog lights	9006	55	B
Parking/front side marker and front turn signal lights	3157 NA	27/8	C
Rear turn signal lights	7440	21	D
Stop/tail and rear side marker lights	7443	21/5	D
Back−up lights	921	18	D
Tail lights	168	5	D
License plate lights	168	5	D
High mounted stop light	168	5	D
Interior lights	—	8	E
Personal lights	—	3.8	D
Glove box light	—	1.2	D
Luggage compartment light	—	8	E
Vanity lights	—	3	D
Door courtesy lights	194	3.4	D

A: HB2 halogen bulbs
B: HB4 halogen bulbs
C: Wedge base bulbs (amber)
D: Wedge base bulbs (clear)
E: Double end bulbs

—Headlights

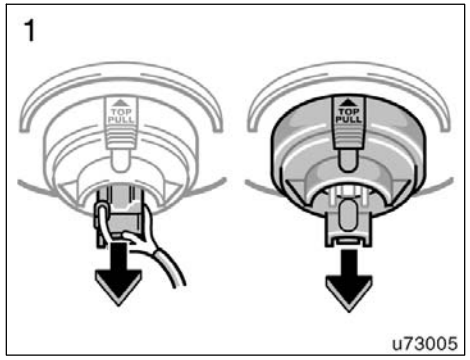

1. Open the hood. Unplug the connector. Remove the rubber cover.

If the connector is tight, wiggle it.

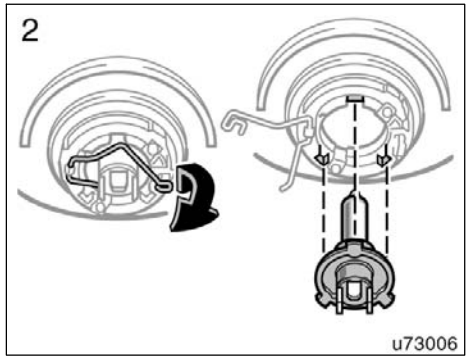

2. Release the bulb retaining spring and remove the bulb. Install a new bulb and the bulb retaining spring.

To install a bulb, align the tabs of the bulb with the cutouts of the mounting hole.

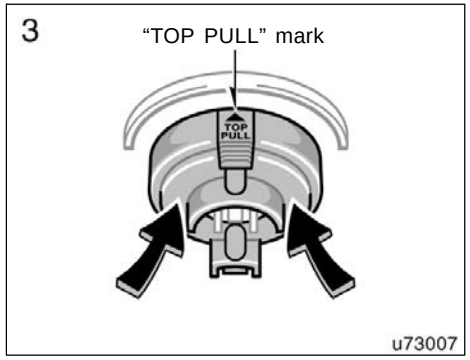

3. Install the rubber cover with the “TOP PULL” mark upward, and snuggle on the boss. Then, plug in the connector.

Make sure the rubber cover fits snugly on the connector and the headlight body.

Aiming is not necessary after replacing the bulb. When aiming adjustment is necessary, contact your Toyota dealer.

—Front fog lights

If either the left or right front fog lights burns out, contact your Toyota dealer.

NOTICE
Do not try to replace the front fog light bulbs by yourself. You may damage the vehicle.

—Parking/front side marker and front turn signal lights

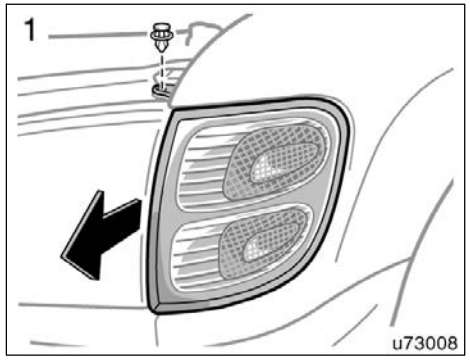

Use a Phillips−head screwdriver. Remove and install the clip as shown in the following illustrations.

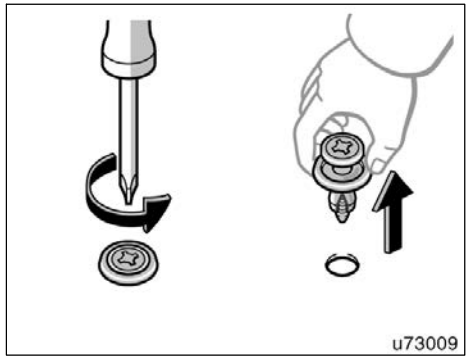

Removing clip

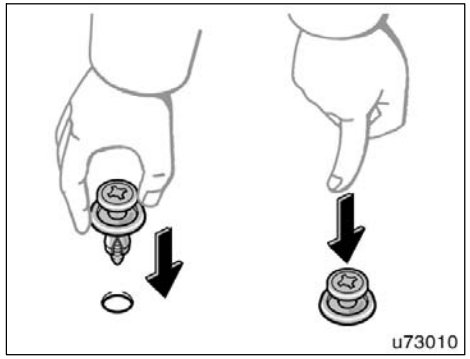

Installing clip

—Rear turn signal, stop/tail, rear side marker and back−up lights

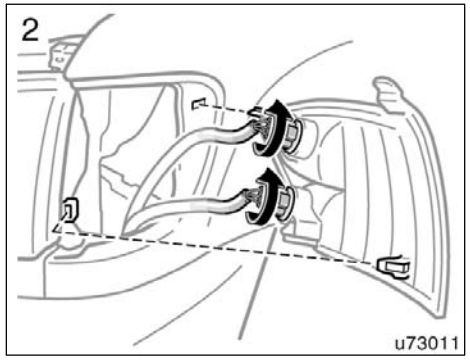

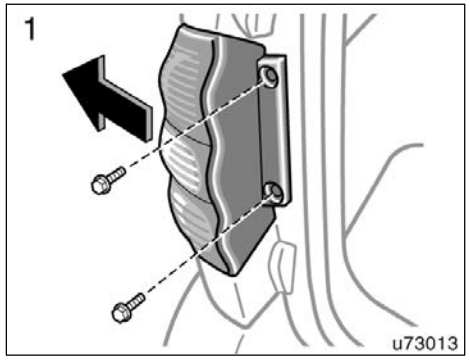

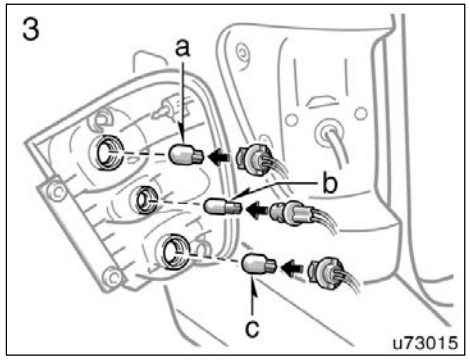

a: Stop/tail and rear side marker light
b: Back−up light
c: Rear turn signal light

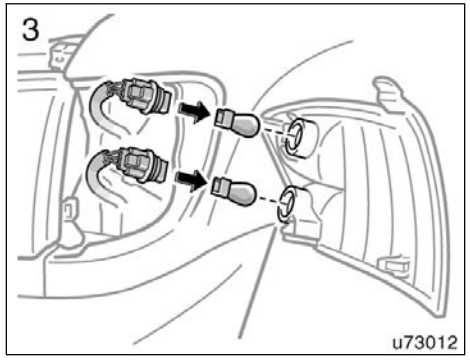

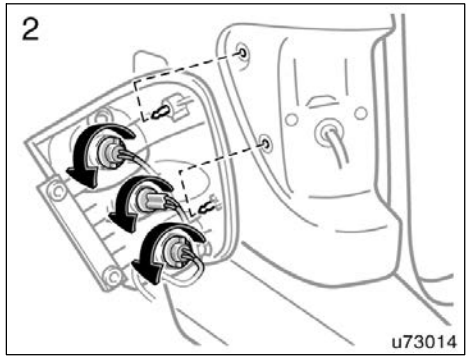

—Tail lights

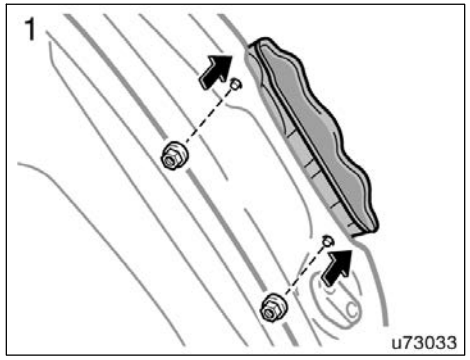

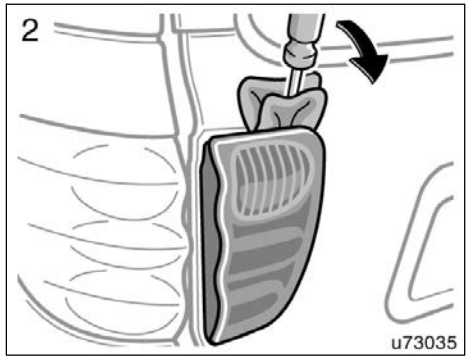

Use a flat−bladed screwdriver. To protect the paint, place several sheets of paper over the paintwork.

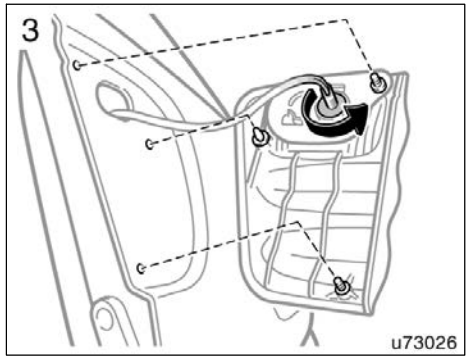

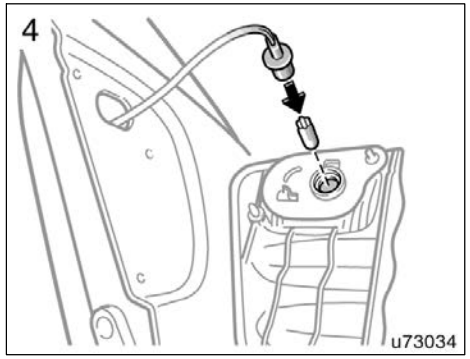

—License plate lights

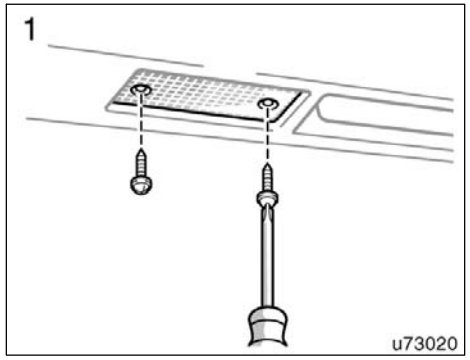

Use a Phillips−head screwdriver.

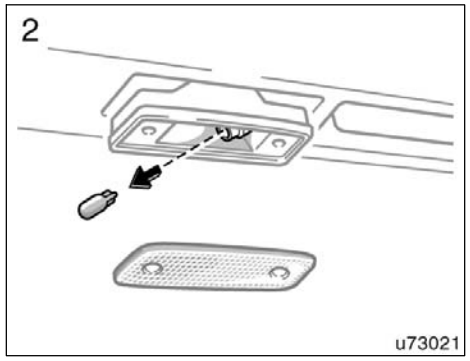

—High mounted stop light

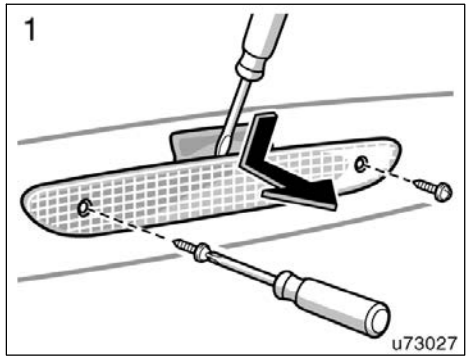

Use a Phillips−head and a flat−bladed screwdrivers. To protect the paint, place several sheets of paper over the paint-work.

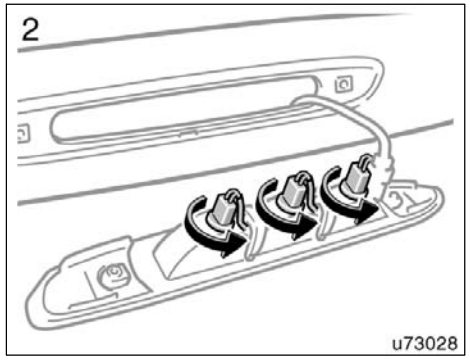

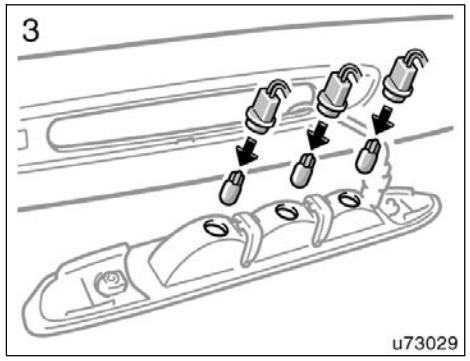

SECTION 8

SPECIFICATIONS

Dimensions and weight 308
Engine 308
Fuel 309
Service specifications 309
Tires 312
Fuses 312

Dimensions and weight

Overall length	mm (in.)		5180 (203.9)
Overall width	mm (in.)		1980 (78.0)*1 1940 (76.4)*2
Overall height	mm (in.)	Two−wheel drive vehicles	1860 (73.2)*3 1870 (73.6)*4 1915 (75.4)*5 1925 (75.8)*6
		Four−wheel drive vehicles	1880 (74.0)*4 1935 (76.2)*6
Wheelbase	mm (in.)		3000 (118.1)
Front tread	mm (in.)		1675 (65.9)
Rear tread	mm (in.)		1680 (66.1)
Vehicle capacity weight (occupants □ luggage)	kg (lb.)		567 (1250)

*1: With over fender
*2: With wheel arch moulding
*3: With P245 tires and without roof rails
*4: With P265 tires and without roof rails
*5: With P245 tires and with roof rails
*6: With P265 tires and with roof rails

Engine

Model:
2UZ−FE

Type:
8 cylinder V type, 4 cycle, gasoline

Bore and stroke, mm (in.):
94.0 □ 84.0 (3.70 □ 3.31)

Displacement, cm^3 (cu. in.):
4664 (284.5)

Fuel

Fuel type:
Unleaded gasoline, Octane Rating 87 (Research Octane Number 91) or higher

Fuel tank capacity, L (gal., Imp. gal.):
98.5 (26, 21.6)

Service specifications

ENGINE

Valve clearance (engine cold), mm (in.):

Intake	0.15—0.25 (0.006—0.010)
Exhaust	0.25—0.35 (0.010—0.014)

Spark plug type:

DENSO	K20R−U
NGK	BKR6EYA

Spark plug gap, mm (in.):
0.8 (0.031)

ENGINE LUBRICATION

Oil capacity (drain and refill), L (qt., Imp. qt.):

With filter	6.2 (6.5, 5.5)
Without filter	5.7 (6.0, 5.0)

Oil grade:
API grade SJ or SL, “Energy−Conserving” or ILSAC multigrade engine oil is recommended.

Recommended oil viscosity (SAE):

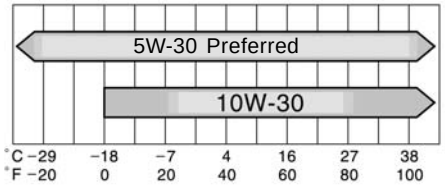

Temperature range anticipated before next oil change

OIL005

COOLING SYSTEM

Total capacity, L (qt., Imp. qt.):

With rear heater	13.4 (14.1, 11.8)
Without rear heater	11.7 (12.4, 10.2)

Coolant type:

"TOYOTA Long Life Coolant" or equivalent

With ethylene−glycol type coolant for a proper corrosion protection of aluminum components

Do not use alcohol type antifreeze or plain water alone.

BATTERY

Open voltage* at 20°C (68°F):

12.6—12.8 V	Fully charged
12.2—12.4 V	Half charged
11.8—12.0 V	Discharged

*: Voltage that is checked 20 minutes after the key is removed with all the lights turned off

Charging rates:
5 A max.

AUTOMATIC TRANSMISSION

Fluid capacity (drain and refill), L (qt., Imp. qt.):
Up to 2.0 (2.1, 1.8)

Fluid type:
Automatic transmission fluid D−II or DEXRON″ III (DEXRON″ II)

TRANSFER

Oil capacity, L (qt., Imp. qt.):
1.2 (1.3, 1.1)

Oil type:
Gear oil API GL−4 or GL−5

Recommended oil viscosity:
SAE 75W−90

DIFFERENTIAL

Oil capacity, L (qt., Imp. qt.):
Front
1.15 (1.2, 1.0)
Rear
3.65 (3.9, 3.3)

Oil type:
Hypoid gear oil API GL−5

Recommended oil viscosity:
Front
SAE 75W−90
Rear
Above −18°C (0°F)
SAE 90
Below −18°C (0°F)
SAE 80W or 80W−90

CHASSIS LUBRICATION

Propeller shafts:
Spiders and slide yokes
Lithium base chassis grease, NLGI No.2

BRAKES

Minimum pedal clearance when depressed with the force of 490 N (50 kgf, 110 lbf) with the engine stopping and after depressing the brake pedal several times, mm (in.):
113 (4.5)

Pedal free play, mm (in.):
1—6 (0.04—0.24)

Pad wear limit, mm (in.):
1.0 (0.04)

Lining wear limit, mm (in.):
1.0 (0.04)

Parking brake adjustment when depressed with the force of 300 N (31 kgf, 67 lbf):
6—9 clicks

Fluid type:
SAE J1703 or FMVSS No.116 DOT 3

STEERING

Wheel free play:
Less than 30 mm (1.2 in.)

Power steering fluid type:
Automatic transmission fluid DEXRON™ II or III

Tires

Tire size, pressure and wheel size:

Tire size	Tire pressure kPa (kgf/cm^2 or bar, psi)		Wheel size
	Front	Rear	
P245/70R16	220 (2.2, 32)	240 (2.4, 35)	7J or 7JJ □ 16
P265/70R16	220 (2.2, 32)	220 (2.2, 32)	7J or 7JJ □ 16

NOTE: For a complete information on tires (e.g. replacing tires or replacing wheels), see “Checking tire pressure” through “Aluminum wheel precautions”, page 288 through 293, in Section 7−2.

Wheel nut torque, N·m (kgf·m, ft·lbf):
110 (11.5, 83)

Fuses

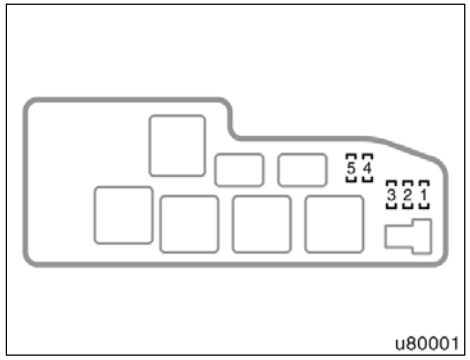

Engine compartment

Fuses (type A)

1. **H−LP RH 10 A (with daytime running light system):** Right−hand headlight (high beam)
2. **H−LP LH 10 A (with daytime running light system):** Left−hand headlight (high beam)
3. **STA 7.5 A:** Multiport fuel injection system/sequential multiport fuel injection system, electronic throttle control system
4. **H−LP RL 10 A (with daytime running light system):** Right−hand headlight (low beam)

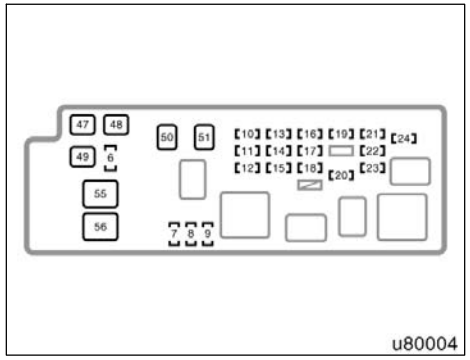

Engine compartment

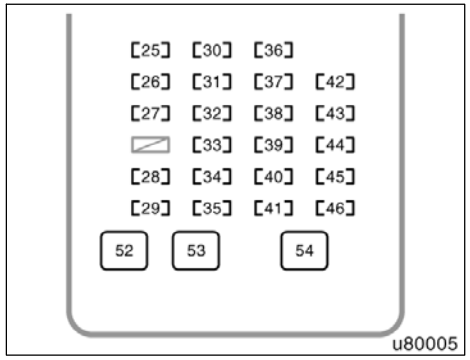

Instrument panel

5. **H−LP LL 10 A (with daytime running light system):** Left−hand headlight (low beam)
6. **CDS FAN 25 A:** Electric cooling fan
7. **SPARE 10 A:** Spare fuse
8. **SPARE 15 A:** Spare fuse
9. **SPARE 20 A:** Spare fuse
10. **ETCS 15 A:** Multiport fuel injection system/sequential multiport fuel injection system, electronic throttle control system
11. **EFI NO.1 20 A:** Multiport fuel injection system/sequential multiport fuel injection system, electric throttle control system
12. **H−LP RH 15 A (without daytime running light system):** Right−hand headlight
13. **TOWING 30 A:** Trailer lights (stop lights, turn signal lights, tail lights, back−up lights)
14. **ALT−S 7.5 A:** Charging system
15. **DRL 7.5 A (with daytime running light system):** Multiplex communication system (power door lock system, security system, auto−door locking system, automatic light control system, headlight delay off system, tail light auto cut system, illuminated entry system, daytime running light system)

    H−LP LH 15 A (without daytime running light system): Left−hand headlight
16. **AM2 30 A:** Starting system, multiport fuel injection system/sequential multiport fuel injection system, electronic throttle control system, “IGN 1” and “IGN 2” fuses
17. **TURN−HAZ 20 A:** Turn signal lights, emergency flashers
18. **RAD NO.3 20 A:** Car audio system
19. **HORN 10 A:** Horns
20. **EFI NO.2 10 A:** Multiport fuel injection system/sequential multiport fuel injection system, electronic throttle control system

21. **DOME 10 A:** Center interior and personal lights, personal lights, luggage compartment light, air conditioning system, wireless remote control system, garage door opener, ignition switch light, door courtesy lights, foot light, vanity lights, power antenna
22. **ECU−B 7.5 A:** Multiplex communication system (power door lock system, security system, auto−door locking system, automatic light control system, headlight delay off system, tail light auto cut system, illuminated entry system, daytime running light system), back door lock system, driver and front passenger door lock system, gauges and meters
23. **MIR HTR 15 A:** Outside rear view mirror heaters
24. **RAD NO.1 20 A:** Car audio system
25. **TAIL 15 A:** Tail lights, back door courtesy light, license plate lights
26. **ECU−IG 7.5 A:** Charging system, cruise control system, anti−lock brake system, vehicle skid control system, traction control system (two−wheel drive models), active traction control system (four−wheel drive models), electronically controlled automatic transmission system, power antenna, electric moon roof, back door lock system, driver and front passenger door lock system, gauges and meters, multi−information display, SRS airbag system, front seat belt pretensioners
27. **WSH 25 A:** Wipers and washer
28. **IGN 2 20 A:** Starting system
29. **PWR NO.3 20 A:** Rear passenger's power window (right side)
30. **PWR NO.4 20 A:** Rear passenger's power window (left side)
31. **CIG 15 A:** Air conditioning systems, power rear view mirror control, cigarette lighter
32. **RAD NO.2 7.5 A:** Car audio system, power antenna, power outlets, multiplex communication system (power door lock system, security system, auto−door locking system, automatic light control system, headlight delay off system, tail light auto cut system, illuminated entry system, daytime running light system)
33. **4WD 20 A:** A.D.D. control system, four−wheel drive system
34. **STOP 15 A:** Stop lights, high−mounted stop lights, multiport fuel injection system/sequential multiport fuel injection system, vehicle skid control system, traction control system (two−wheel drive models), active traction control system (four−wheel drive models), multiplex communication system (auto−door locking system)
35. **OBD 7.5 A:** On−board diagnosis system

36. **PANEL 7.5 A:** Instrument panel lights, glove box light, lights of seat heaters, cigarette lighter, ashtrays, multi−information display, car audio system, gauge and meters and air conditioning systems
37. **PWR NO.1 25 A:** Driver's door lock system
38. **WIP 25 A:** Wiper and washers
39. **IGN 1 10 A:** Charging system
40. **SUN ROOF 25 A:** Electric moon roof
41. **PWR NO.2 25 A:** Front passengers' door lock system
42. **HTR 10 A:** Air conditioning systems, electric cooling fan, back window defogger, outside rear view mirror heater
43. **FOG 15 A:** Front fog lights
44. **GAUGE 10 A:** Back−up lights, seat heaters, gauge and meters, air conditioning systems
45. **PWR OUTLET 15 A:** Power outlets
46. **SEAT HEATER 15 A:** Seat heaters

Fuses (type B)

47. **RR HEATER 30 A:** Rear air conditioning system
48. **HEATER 40 A:** Front air conditioning system
49. **DEFOG 40 A:** Back window defogger
50. **MAIN 40 A:** Starting system, "H−LP RH", "H−LP LH" and "STA" fuses
51. **DOOR NO.2 30 A:** Multiplex communication system (power door lock system, security system, auto−door locking system)
52. **PWR SEAT 30 A:** Power front seats
53. **AM1 40 A:** "HTR", "CIG", "GAUGE", "RAD NO.2", "ECU−IG", "WIPER", "WSH" and "4WD" fuses
54. **PWR NO.5 30 A:** Power door lock system, back door lock system

Fuses (type C)

55. **ALT 120 A:** "AM1", "PWR SEAT", "TAIL", "STOP", "SUN ROOF", "PANEL", "OBD", "FOG", "PWR NO.1", "PWR NO.2", "PWR NO.5", "PWR NO.3", "PWR NO.4", "PWR OUTLET" and "SEAT HTR" fuses
56. **ABS 60 A:** Anti−lock brake system, vehicle skid control system, traction control system (two−wheel drive models), active traction control system (four−wheel drive models)

SECTION 9

REPORTING SAFETY DEFECTS FOR U.S. OWNERS AND UNIFORM TIRE QUALITY GRADING

Reporting safety defects for U.S. owners 318
Uniform tire quality grading 318

Reporting safety defects for U.S. owners

If you believe that your vehicle has a defect which could cause a crash or could cause injury or death, you should immediately inform the National Highway Traffic Safety Administration (NHTSA) in addition to notifying Toyota Motor Sales, U.S.A., Inc. (Toll−free: 1−800−331−4331).

If NHTSA receives similar complaints, it may open an investigation, and if it finds that a safety defect exists in a group of vehicles, it may order a recall and remedy campaign. However, NHTSA cannot become involved in individual problems between you, your dealer, or Toyota Motor Sales, U.S.A., Inc.

To contact NHTSA, you may either call the Auto Safety Hotline toll−free at 1−800−424−9393 (or 366−0123 in Washington, D.C. area) or write to: NHTSA, U.S. Department of Transportation, Washington, D.C. 20590. You can also obtain other information about motor vehicle safety from the Hotline.

Uniform tire quality grading

This information has been prepared in accordance with regulations issued by the National Highway Traffic Safety Administration of the U.S. Department of Transportation. It provides the purchasers and/or prospective purchasers of Toyota vehicles with information on uniform tire quality grading.

Your Toyota dealer will help answer any questions you may have as you read this information.

DOT quality grades—All passenger car tires must conform to Federal Safety Requirements in addition to these grades. Quality grades can be found where applicable on the tire sidewall between tread shoulder and maximum section width. For example: Treadwear 200 Traction AA Temperature A

Treadwear—The treadwear grade is a comparative rating based on the wear rate of the tire when tested under controlled conditions on a specified government test course. For example, a tire graded 150 would wear one and a half (1−1/2) times as well on the government course as a tire graded 100. The relative performance of tires depends upon the actual conditions of their use, however, and may depart significantly from the norm due to variations in driving habits, service practices and differences in road characteristics and climate.

Traction AA, A, B, C—The traction grades, from highest to lowest, are AA, A, B, and C, and they represent the tire's ability to stop on wet pavement as measured under controlled conditions on specified government test surfaces of asphalt and concrete. A tire marked C may have poor traction performance.

Warning: The traction grade assigned to this tire is based on braking (straight ahead) traction tests and does not include cornering (turning) traction.

Temperature A, B, C—The temperature grades are A (the highest), B, and C, representing the tire's resistance to the generation of heat and its ability to dissipate heat when tested under controlled conditions on a specified indoor laboratory test wheel. Sustained high temperature can cause the material of the tire to degenerate and reduce tire life, and excessive temperature can lead to sudden tire failure. The grade C corresponds to a level of performance which all passenger car tires must meet under the Federal Motor Vehicle Safety Standard No.109. Grades B and A represent higher levels of performance on the laboratory test wheel than the minimum required by law.

Warning: The temperature grades for this tire are established for a tire that is properly inflated and not overloaded. Excessive speed, underinflation, or excessive loading, either separately or in combination, can cause heat buildup and possible tire failure.

SECTION 10

INDEX

A

Active traction control system
warning light 125
Adding washer fluid 299
Adjustment
Front seats 37,38
Seat belt 55
Second seat 40
Third seats 45
Airbags 68,75
Aluminum wheel precautions 293
Anti−glare inside rear view mirror 106
Anti−lock brake system
warning light 125
Anti−theft steering column lock 132
Appearance care
Cleaning the interior 267
Protecting your Toyota
from corrosion 264
Washing and waxing 265
Armrests 53
Automatic door locking and
unlocking functions 14
Automatic transmission
Driving with
an automatic transmission 133
Shift pattern 133
Shifting speed 133
Automatic transmission fluid
temperature warning light 125
Auxiliary box 200
Auxiliary catch, Engine hood 29

B

Back door 27
Back door lock 27
Back window 25
Back window and outside rear
view mirror defogger switch 119
Back window wiper and
washer switch 118
Battery
Checking battery condition 296
Gas caution 296
Handling safety 296
Recharging precautions 297
Winter driving tips 232
Before starting the engine 228
Brake pad wear limit indicators 222
Brake system 218
Brake system warning light 125
Brakes
Fluid level 287
Pad wear limit indicators 222
Parking 147
Break−in tips 213
Brightness control 114

C

Car audio system 152
Carbon monoxide caution 217
Cargo net hooks 207
Cassette player 152
Center interior and personal lights 115
Checking and replacing fuses 298
Checking brake fluid 287
Checking the engine oil level 284
Checking the radiator and
condenser 286
Child restraint
Child restraint system 83
Installation 85
Installation with child restraint
lower anchorages 99,101
Precautions 82
Types of child restraint system 84
Using a top strap 95,97
Cigarette lighter and ashtray 195
Cleaning the interior 267
Clock 195
Coin holder 203
Cold weather
Operation 232
Compact disc and cassette tape holder
Cassette tape holder 205
Compact disc holder 205
Compact disc auto changer 152
Compact disc auto changer
controller 152
Compact disc player 152
Compass 191
Condenser
Checking the condenser 286
Console box
Rear 202
Controls, Instrument panel 2,4

Cooling system
Coolant level 285
Engine overheating 248
Radiator and reservoir 285
Radiator cap 248
Winter driving tips 232
Corrosion prevention 264
Cruise control 148
Cup holders 205

D

Defogger
Back window 119
Outside rear view mirror 119
Dimmer switch, Headlight 110,112
Dinghy towing 233
Directional signals 110,112
Discharge warning light 125
Do−it−yourself maintenance
Parts and tools 281
Service precautions 280
Does your vehicle need repairing? 275
Doors
Side doors 12
Driver's seat belt reminder buzzer 125
Driver's seat belt reminder light 125
Driving
Automatic transmission 133
Driving tips 228
Driving tips
Driving tips in various conditions 229
Driving with
an automatic transmission 133
Economical driving 240
Good driving practice 133
Winter driving tips 232
During
Break−in 213

E

Economical driving
Saving money on both fuel
and repairs 240
Electric moon roof 32
Electrical system,
Battery 296,297
Fuse locations 279
Fuses 298
Emergency flasher switch 113
Emergency, In case of8
Blown fuse 298
Emergency flasher switch 113
Flat tire 249
If you cannot increase
the engine speed 247
If you lose your keys 261
If you lose your wireless remote
control transmitter 261
If your engine stalls while driving 247
If your vehicle needs to be towed 257
If your vehicle will not start 244
Jump starting 245
Overheating 248
Towing 257
Emissions Inspection and
Maintenance (I/M) programs 276
Engine
Before starting the engine 228
Checking the coolant level 285
Emission control device 216
Engine compartment 278
Exhaust gas caution 217
Hood release 29
Oil consumption 217
Oil level 284
Oil pressure gauge 123
Overheating 248
Starting procedure 228
Three−way catalytic converter 216
Engine coolant
Temperature gauge 122
Winter driving tips 232
Engine coolant temperature gauge 122
Engine immobiliser system 10
Engine oil
Winter driving tips 232
Engine oil pressure gauge 123
Exhaust gas caution 217

F

Facts about engine oil consumption 217
Flasher, Headlight 110,112
Flat tire
After changing wheels 256
Changing tire 254
If you have a flat tire 249
Jack point 252
Jacking precautions 249
Jacking up 253

Loosening wheel nuts 252
Lowering vehicle 255
Reinstalling wheel ornament 255
Removing wheel ornament 251
Wheel block 251
Wheel nuts 254
Floor mat 208
Fluid level
Brake 287
Power steering 287
Washer fluid 299
Fog light switch, Front 114
Foreign countries, Operation in 215
Four−wheel drive
Operating the four−wheel drive system 137
Front air conditioning system
Instrument panel 172
Front fog light switch 114
Front passenger's seat belt reminder light 125
Front seats 36,37,38
Fuel
Filler door opener 31
Fuel economy 240
Fuel pump shut off system 215
Gauge 122
Operation in foreign countries 215
Tank cap 31
Fuel information 213
Fuel pump shut off system 215
Fuse
Fuse box 298
Fuse locations 279

G

Garage door opener 186
Garage door opener box 197
Gauge
Engine coolant temperature 122
Engine oil pressure 123
Fuel 122
Glove box 197
Good driving practice 133
Grocery bag hooks 207

H

Hazard switch 113
Head restraints 52
Headlight switch 110,112
High speed operation
During break−in 213
Hood release, Engine 29
How to start the engine 228

I

I/M test 276
Identification
Vehicle 223
Ignition switch 132
Ignition switch light 117
Indicator symbols 5
Instrument panel
Brightness control 114
Cigarette lighter and ashtray 195
Clock 195
Engine oil pressure gauge 123
Fuel gauge 122
Indicator symbols 5
Odometer 124
Tachometer 124
Trip meter 124
Instrument panel light control 114
Instrument panel overview 2,4

J

Jack
Location 250
Jump starting 245

K

Key reminder buzzer 125
Keys 8,261

L

Light bulbs
Back−up light 303
Front fog lights 302
Front side marker lights 302
Front turn signal lights 302
Headlights 301
High mounted stoplight 305
Licence plate lights 305
Parking lights 302
Rear turn signal light 303
Stop/tail/rear side marker light 303
Tail lights 304

Light bulbs, Replacing 300
Lights
Luggage compartment 116
Lock
Back door 27
Side doors 12
Steering column 132
Low fuel level warning light 125
Low windshield washer fluid level
warning light 125
Luggage compartment light 116
Luggage stowage precautions 222

M

Maintenance
Do−it−yourself maintenance 280
Does your vehicle need
repairing? 275
General maintenance 273
Maintenance requirements 272
Parts and tools 281
Where to go for service 272
Malfunction indicator lamp 125,276
Maximum allowable speed
Automatic transmission 133
Mirror
Anti−glare inside rear view 106
Mirrors
Folding rear view 105
Outside rear view 104
Power rear view 104
Vanity 107
Moon roof 32
Multi−information display 184

N

New vehicle break−in 213
Note pad holder 203

O

Odometer 124
Off−road driving precautions 230
Off−road vehicle precautions 212
Oil
Consumption 217
Power steering 287
Pressure gauge 123
Viscosity and grade 284
Oil consumption 217
Open door warning light 125
Operation in foreign countries 215
Outside temperature and cruise
information display 189
Overdrive switch 133
Overheating, Engine 248
Overheating, Engine coolant 122
Overview
Engine compartment 278

P

Parking brake
Operation 147
Reminder light 147
Personal light 115
Polishing 265
Power back window 25
Power outlet 196
Power rear view mirror control 104
Power steering
Fluid level 287
Power window switches 22
Preloaders (seat belt pretensioners) 65
Pretensioners
(seat belt pretensioners) 65
Protecting your Toyota
from corrosion 264

R

Radiator
Checking the radiator 286
Coolant, Engine 285
Radio 152
Rear air conditioning system 180
Rear console box 202
Rear seat
Third seat entry 41
Rear seat precautions 39
Rear seats 39
Rear view mirror
Anti−glare inside 106

Rear view mirrors
Folding 105
Outside 104
Power 104
Reporting safety defects
for U.S. owners 318
Roof luggage carrier 207

S

Seat adjustment precautions
Front seats 36
Seat belt comfort guide 63
Seat belt extender 62
Seat belts
Cleaning 267
Fastening 55
Seat belt precautions 55
Seat belt pretensioners 65
Seat heater switches 54
Seats 36
Second seat 40,41
Service and maintenance 272
Side door locks 12
Side door locks
Automatic locking and
unlocking functions 14
Side doors 12
Side doors
Automatic locking and
unlocking functions 14
Spare fuse 298
Spare tire 250
Specifications 308
SRS driver and front
passenger airbags 68
SRS side and curtain shield airbags 75
SRS warning light 125
Starting
Cold weather 228
Engine 228
Jump starting 245
Steering
Tilt steering wheel 103
Steering column 132
Column lock 132
Sun visors 107
Suspension and chassis 224
Switch
Back window defogger 119
Back window wiper and washer 118
Emergency flasher 113
Headlight, dimmer and
turn signal 110,112
Ignition 132
Outside rear view mirror defogger 119
Overdrive 133
Windshield wiper and washer 117

T

Tachometer 124
Theft deterrent system 29
Theft prevention labels 224
Third seats 45
Three−way catalytic converter 216
Tie−down hooks 206
Tilt steering wheel 103
Tires
Changing 249
Flat tire 249
Rotation 290
Spare 250
Tire information
. 288,289,290,291,292
Tools 250
Towing
Dinghy towing 233
Emergency towing 259
Emergency towing hook
precautions 260
If your vehicle needs to be towed 257
Tips for towing a stuck vehicle 261
Trailer 233
Traction control system
warning light 125
Trailer towing 233
Trip meter 124
Turn signals 110,112
Types of tires 224

U

Unengaged “Park” warning light 125
Uniform tire quality grading 318

V

Vanity mirrors 107
Vehicle skid control system
warning light 125
Vehicle skid control system/traction
control system/active traction
control system warning lights 125
Voltmeter 124

W

Warning buzzer 125
Warning reflector holder 201
Washer fluid
Adding washer fluid 299
Washing and waxing 265
Wheels
Aluminum wheel 293
Windshield wiper and
washer switch 117
Winter driving tips 232
Wireless remote control 16,261

rU–2

Quick index

à If a service reminder indicator or warning buzzer comes on 125
à If your vehicle will not start 244
à If your engine stalls while driving 247
à If you cannot increase the engine speed 247
à If your vehicle overheats 248
à If you have a flat tire 249
à If your vehicle needs to be towed 257
à Tips for driving during break–in period 213
à How to start the engine 228
à General maintenance 273
à Complete index 321

Gas station information

Fuel type:

UNLEADED gasoline, Octane Rating 87 (Research Octane Number 91) or higher

See page 213 for detailed information.

Fuel tank capacity:
98.5 L (26 gal., 21.6 Imp. gal.)

Engine oil:
API grade SJ or SL, “Energy–Conserving” or ILSAC multigrade engine oil is recommended.

See page 284 for detailed information.

Automatic transmission fluid:
Automatic transmission fluid D–II or DEXRON™ III (DEXRON™ II)

See page 310 for detailed information.

Tire information: See pages 288 through 293.

Tire pressure: See page 312.

2002 MY SEQUOIA_U (OM34418U)

Publication No. OM34418U
Part No. 01999-34418
Printed in Japan 01–0108–00 I
セコイア(北米U)

WE REALLY CARE ABOUT YOU — PLEASE BUCKLE UP

Toyota has made a special effort to encourage use of seat belts.

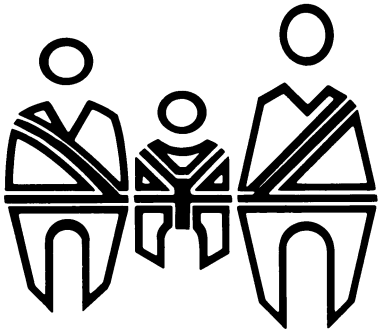

Toyota belts are:

- à **Comfortable**
- à **Easy to use**
- à **Convenient**

We encourage you to use your belts every time you drive.

You should know as much about the quality and importance of proper maintenance of your new vehicle as the people who built it.

The Toyota authorized Repair Manual tells you how to maintain your vehicle and enables you to correctly perform your own maintenance.

2002 MY SEQUOIA_U (OM34418U)

The best way to keep your new vehicle in top running order is to maintain it properly from the moment you drive it off the showroom floor.

The Toyota authorized Repair Manual is packed with literally everything you need to know to perform your own maintenance in virtually every area of your new vehicle.

Maintenance procedures for the engine, chassis, body, electrical system, and more, are clearly explained and illustrated.

Periodic maintenance and tune–up

Periodic maintenance and tune–up helps to prevent small problems from growing into larger ones later on. The repair manual outlines exactly what maintenance is required and clearly explains how to do the work yourself step–by–step.

Areas covered include such things as spark plug replacement, valve clearance adjustment and engine oil and filter replacement.

Where to obtain the Repair Manual

The repair manual for SEQUOIA, written in English, may be purchased as applicable from any Toyota dealer.

Pub. Name: 2002 SEQUOIA Repair Manual

Pub. No.: RM886U1 (Maintenance, Preparation, Service specifications and Diagnostics)
RM886U2 (Engine, Chassis and Body)