RAM TRUCK

2011

1500/2500/3500

OWNER'S MANUAL

VEHICLES SOLD IN CANADA

With respect to any Vehicles Sold in Canada, the name Chrysler Group LLC shall be deemed to be deleted and the name Chrysler Canada Inc. used in substitution therefore.

DRIVING AND ALCOHOL

Drunken driving is one of the most frequent causes of accidents.

Your driving ability can be seriously impaired with blood alcohol levels far below the legal minimum. If you are drinking, don't drive. Ride with a designated non-drinking driver, call a cab, a friend, or use public transportation.

WARNING!
Driving after drinking can lead to an accident. Your perceptions are less sharp, your reflexes are slower, and your judgment is impaired when you have been drinking. Never drink and then drive.

This manual illustrates and describes the operation of features and equipment that are either standard or optional on this vehicle. This manual may also include a description of features and equipment that are no longer available or were not ordered on this vehicle. Please disregard any features and equipment described in this manual that are not on this vehicle.

Chrysler Group LLC reserves the right to make changes in design and specifications, and/or make additions to or improvements to its products without imposing any obligation upon itself to install them on products previously manufactured.

Copyright © 2010 Chrysler Group LLC

TABLE OF CONTENTS

SECTION		PAGE
1	INTRODUCTION	3
2	THINGS TO KNOW BEFORE STARTING YOUR VEHICLE	9
3	UNDERSTANDING THE FEATURES OF YOUR VEHICLE	87
4	UNDERSTANDING YOUR INSTRUMENT PANEL	201
5	STARTING AND OPERATING	303
6	WHAT TO DO IN EMERGENCIES	489
7	MAINTAINING YOUR VEHICLE	523
8	MAINTENANCE SCHEDULES	585
9	IF YOU NEED CONSUMER ASSISTANCE	603
10	INDEX	613

INTRODUCTION

CONTENTS

■ Introduction 4
■ How To Use This Manual 4
■ Warnings And Cautions 6
■ Van Conversions/Campers 6
■ Vehicle Identification Number 7
■ Vehicle Modifications/Alterations 7

INTRODUCTION

Congratulations on selecting your new Chrysler Group LLC vehicle. Be assured that it represents precision workmanship, distinctive styling, and high quality - all essentials that are traditional to our vehicles.

This Owner's Manual has been prepared with the assistance of service and engineering specialists to acquaint you with the operation and maintenance of your vehicle. It is supplemented by Warranty Information, and various customer-oriented documents. Please take the time to read these publications carefully. Following the instructions and recommendations in this manual will help assure safe and enjoyable operation of your vehicle.

NOTE: After reviewing the owner information, it should be stored in the vehicle for convenient referencing and remain with the vehicle when sold.

When it comes to service, remember that your authorized dealer knows your vehicle best, has factory-trained technicians and genuine MOPAR® parts, and cares about your satisfaction.

HOW TO USE THIS MANUAL

Consult the Table of Contents to determine which section contains the information you desire.

Since the specification of your vehicle depends on the items of equipment ordered, certain descriptions and illustrations may differ from your vehicle's equipment

The detailed index at the back of this Owner's Manual contains a complete listing of all subjects.

Consult the following table for a description of the symbols that may be used on your vehicle or throughout this Owner's Manual:

WATER IN FUEL
REAR WINDOW WIPER
WINDSHIELD WIPER INTERMITTENT
EXTERIOR BULB FAILURE
HIGH BEAM
TURN SIGNALS
UPPER AIR OUTLET
HEATED SEAT LOW
DOOR LOCK
ADJUSTABLE PEDALS
ELECTRONIC SPEED CONTROL
ESP BAS
ELECTRONIC STABILITY PROGRAM / BRAKE ASSIST SYSTEM
FUEL
REAR WINDOW INTERMITTENT WIPER
WINDSHIELD WASHER
MASTER LIGHTING SWITCH
LOW BEAM
KEY ACTIVATE (POWER OUTLET)
UPPER AND LOWER AIR OUTLET
HEATED SEAT HIGH
WINDOW LIFT
TIRE PRESSURE MONITOR
HILL DESCENT CONTROL
BRAKE
BRAKE SYSTEM WARNING PARKING BRAKE
FUEL FILL SIDE
REAR WINDOW WASHER
WINDSHIELD WASHER FLUID LEVEL
DOME LIGHT
FRONT FOG LIGHT
HOOD RELEASE
LOWER AIR OUTLET
RECIRCULATION
CONVERTIBLE 4 WINDOW DOWN
ELECTRONIC STABILITY CONTROL
AWD!
ALL WHEEL DRIVE
ABS
FAILURE OF ANTI-LOCK BRAKING SYSTEM
ENGINE OIL
REAR WINDOW DEFROST
WINDSHIELD, ELECTRICALLY HEATED
PARK LIGHTS
REAR FOG LAMP
LIFTGATE RELEASE AND LIFTGATE OPEN
DEFROST AND LOWER AIR OUTLET
VENTILATING FAN
WINDOW LOCK
ELECTRONIC THROTTLE CONTROL
4WD!
FOUR WHEEL DRIVE
BRAKE
BRAKE SYSTEM WARNING PARKING BRAKE
BATTERY CHARGING
HEATED MIRROR
WINDSHIELD DEFROST
INSTRUMENT PANEL ILLUMINATION
SEAT BELT
SLIDING DOOR
TRUNK / DECK RELEASE
AIR CONDITIONING
CHILD SEAT TETHER ANCHOR
VOICE RECOGNITION BUTTON
WARNING
TOW/ HAUL
TOW / HAUL
GLOW PLUG
POWER STEERING FLUID
WINDSHIELD WIPER AND WASHER
SIDE AIRBAG
AIRBAG
SLIDING DOOR
EMERGENCY RELEASE HANDLE
LIGHTER
LOWER ANCHORS AND TETHER FOR CHILDREN (LATCH)
UCONNECT™ BUTTON
HAZARD
4 LOW
FOUR WHEEL DRIVE LOW
MALFUNCTION INDICATOR LIGHT
TRANS OIL TEMP
ENGINE COOLANT TEMPERATURE
SRS AIRBAG
SUPPLEMENTAL RESTRAINT SYSTEM
PASSENGER AIRBAG OFF
DOOR AJAR
CONVERTIBLE TOP DOWN
CONVERTIBLE TOP UP
HORN
SEE OWNER'S MANUAL (3)
A/C PUSH
AIR CONDITIONER
OFF
ELECTRONIC STABILITY CONTROL OFF
010533317

WARNINGS AND CAUTIONS

This Owner's Manual contains **WARNINGS** against operating procedures that could result in a collision or bodily injury. It also contains **CAUTIONS** against procedures that could result in damage to your vehicle. If you do not read this entire manual, you may miss important information. Observe all Warnings and Cautions.

VAN CONVERSIONS/CAMPERS

The Manufacturer's Warranty does not apply to body modifications or special equipment installed by van conversion/camper manufacturers/body builders. Refer to the Warranty information book, Section 2.1.C. Such equipment includes video monitors, VCRs, heaters, stoves, refrigerators, etc. For warranty coverage and service on these items, contact the applicable manufacturer.

Operating instructions for the special equipment installed by the conversion/camper manufacturer should also be supplied with your vehicle. If these instructions are missing, please contact your authorized dealer for assistance in obtaining replacement documents from the applicable manufacturer.

For information on the Body Builders Guide refer to: www.dodgebodybuilder.com. This website contains dimensional and technical specifications for your vehicle. It is intended for Second Stage Manufacturer's technical support. For service issues, contact your authorized dealer.

VEHICLE IDENTIFICATION NUMBER

The Vehicle Identification Number (VIN) is found on the left front corner of the instrument panel, visible through the windshield. This number also appears on the Automobile Information Disclosure Label affixed to a window on your vehicle, the vehicle registration and title.

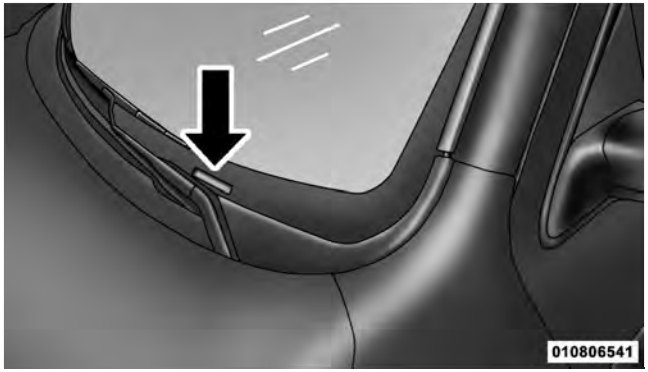

Vehicle Identification Number

NOTE: It is illegal to remove or alter the VIN.

VEHICLE MODIFICATIONS/ALTERATIONS

WARNING!

Any modifications or alterations to this vehicle could seriously affect its roadworthiness and safety and may lead to a accident resulting in serious injury or death.

THINGS TO KNOW BEFORE STARTING YOUR VEHICLE

CONTENTS

- A Word About Your Keys 12
  - Wireless Ignition Node (WIN) — If Equipped 12
  - Key FOB 13
  - Removing Key FOB From Ignition 14
  - Key-In-Ignition Reminder 15
- Sentry Key® 16
  - Replacement Keys 17
  - Customer Key Programming 17
  - General Information 18
- Vehicle Security Alarm — If Equipped 18
  - Rearming Of The System 18
  - To Arm The System 18
  - To Disarm The System 19
- Illuminated Entry — If Equipped 19
- Remote Keyless Entry (RKE) — If Equipped . . . 20
  - To Unlock The Doors 20
  - To Lock The Doors 22

- Remote Open Window Feature — If Equipped 23
- Using The Panic Alarm 24
- Programming Additional Transmitters 24
- Transmitter Battery Replacement 24
- General Information 25

■ Remote Starting System — If Equipped 26

- How To Use Remote Start 26

■ Door Locks 29

- Manual Door Locks 29
- Power Door Locks — If Equipped 30
- Child-Protection Door Lock 33

■ Windows 34

- Power Windows – If Equipped 34
- Wind Buffeting 37

■ Occupant Restraints 38

- Lap/Shoulder Belts 39
- Lap/Shoulder Belt Untwisting Procedure 47
- Adjustable Upper Shoulder Belt Anchorage . . . 47
- Center Lap Belts 48
- Energy Management Feature 48
- Seat Belts In Passenger Seating Positions 49
- Automatic Locking Retractor (ALR) Mode – If Equipped 50
- Seat Belt Pretensioners — If Equipped 50

□ Enhanced Seat Belt Use Reminder System (BeltAlert®) 51
□ Seat Belts And Pregnant Women 52
□ Seat Belt Extender 52
□ Supplemental Restraint System (SRS) – Airbags 53
□ Airbag System Components 54
□ Advanced Front Airbag Features 55
□ Airbag Deployment Sensors And Controls . . . 59
□ Event Data Recorder (EDR) 66
□ Child Restraints 67
■ Engine Break-In Recommendations 81
■ Safety Tips 82
□ Transporting Passengers 82
□ Exhaust Gas 82
□ Safety Checks You Should Make Inside The Vehicle 83
□ Periodic Safety Checks You Should Make Outside The Vehicle 85

A WORD ABOUT YOUR KEYS

Key Fob with Remote Keyless Entry (RKE) — If Equipped

Your vehicle uses a keyless ignition system. This system consists of a Key Fob with Remote Keyless Entry (RKE) transmitter and a Wireless Ignition Node (WIN) with integral ignition switch. You can insert the Key Fob into the ignition switch with either side up.

Standard Blade Ignition Key — If Equipped

Your vehicle may use a standard blade key ignition system. The authorized dealer that sold you your vehicle has the key code numbers for your vehicle locks. These numbers can be used to order duplicate keys from your authorized dealer. Ask your authorized dealer for these numbers and keep them in a safe place. You can insert the double-sided standard blade key into the ignition switch with either side up.

Wireless Ignition Node (WIN) — If Equipped

The Wireless Ignition Node (WIN) operates similar to an ignition switch. It has four operating positions, three with detents and one that is spring-loaded. The detent positions are OFF, ACC, and ON/RUN. The START position is a spring-loaded momentary contact position. When released from the START position, the switch automatically returns to the ON/RUN position.

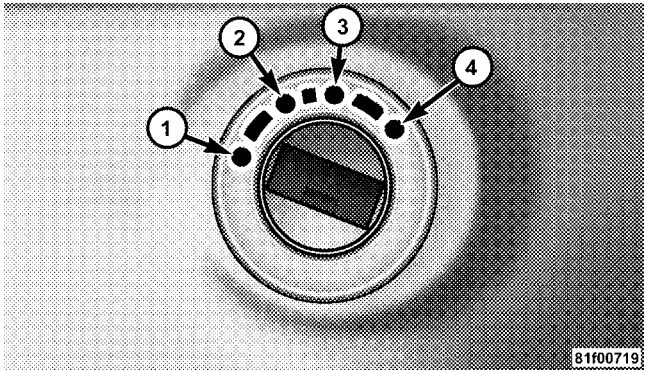

Wireless Ignition Node (WIN)

1 — OFF
2 — ACC (ACCESSORY)
3 — ON/RUN
4 — START

Key Fob

The Key Fob operates the ignition switch. Insert the square end of the key fob into the ignition switch located on the instrument panel and rotate to the desired position. It also contains the Remote Keyless Entry (RKE) transmitter and an emergency key, which stores in the rear of the Key Fob.

The emergency key allows for entry into the vehicle should the battery in the vehicle or the RKE transmitter go dead. You can keep the emergency key with you when valet parking.

To remove the emergency key, slide the mechanical latch at the top of the Key Fob sideways with your thumb and then pull the key out with your other hand.

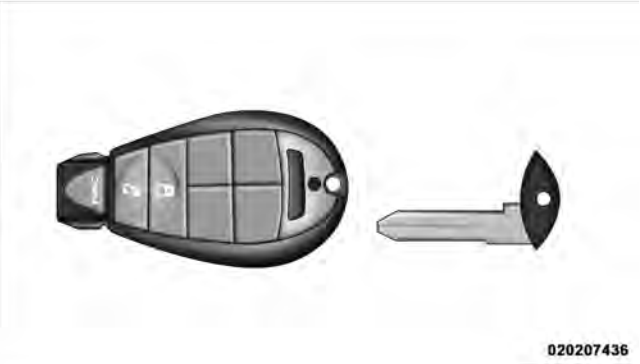

Emergency Key Removal

NOTE: You can insert the double-sided emergency key into the lock cylinder with either side up.

Removing Key Fob From Ignition

Place the shift lever in PARK (if equipped with an automatic transmission). Turn the Key Fob to the OFF position and then remove the Key Fob.

NOTE:

- For vehicles not equipped with the Electronic Vehicle Information Center (EVIC), the power window switches, radio, power sunroof (if equipped), and power outlets will remain active for 10 minutes after the ignition switch is turned to the OFF position. Opening either front door will cancel this feature.
- For vehicles equipped with the EVIC, the power window switches, radio, power sunroof (if equipped), and power outlets will remain active for up to 10 minutes after the ignition switch is turned to the OFF position. Opening either front door will cancel this feature. The time for this feature is programmable. Refer to "Electronic Vehicle Information Center

(EVIC)/Personal Settings (Customer-Programmable Features)" in "Understanding Your Instrument Panel" for further information.

WARNING!

- **Never leave children alone in a vehicle. Leaving unattended children in a vehicle is dangerous for a number of reasons. A child or others could be seriously or fatally injured. Don't leave the keys in the ignition. A child could operate power windows, other controls, or move the vehicle.**
- **Do not leave children or animals inside parked vehicles in hot weather. Interior heat build-up may cause serious injury or death.**

CAUTION!

An unlocked car is an invitation to thieves. Always remove the key from the ignition and lock all doors when leaving the vehicle unattended.

Key-In-Ignition Reminder

Opening the driver's door when the Key Fob is in the ignition and the ignition switch position is OFF or ACC, sounds a signal to remind you to remove the Key Fob.

NOTE:

- The Key-In-Ignition reminder only sounds when the Key Fob is placed in the OFF or ACC ignition position.
- If equipped with Electronic Vehicle Information Center (EVIC) the EVIC will display "Key In Ignition".

SENTRY KEY®

The Sentry Key® Immobilizer System prevents unauthorized vehicle operation by disabling the engine. The system does not need to be armed or activated. Operation is automatic, regardless of whether the vehicle is locked or unlocked.

The system uses a Key Fob with a factory-mated Remote Keyless Entry (RKE) transmitter and Wireless Ignition Node (WIN) to prevent unauthorized vehicle operation. Therefore, only Key Fobs that are programmed to the vehicle can be used to start and operate the vehicle. The system will not allow the engine to crank if an invalid Key Fob is used to start and operate the vehicle.

NOTE: A Key Fob that has not been programmed is also considered an invalid key.

During normal operation, after turning on the ignition switch, the Vehicle Security Light will turn on for three seconds for a bulb check. If the light remains on after the bulb check, it indicates that there is a problem with the electronics. In addition, if the light begins to flash after the bulb check, it indicates that someone used an invalid Key Fob to try to start the engine. Either of these conditions will result in the engine being shut off after two seconds.

If the Vehicle Security Light turns on during normal vehicle operation (vehicle running for longer than 10 seconds), it indicates that there is a fault in the electronics. Should this occur, have the vehicle serviced as soon as possible by an authorized dealer.

CAUTION!

The Sentry Key® Immobilizer system is not compatible with some after-market remote starting systems. Use of these systems may result in vehicle starting problems and loss of security protection.

All of the Key Fobs provided with your new vehicle have been programmed to the vehicle electronics.

Replacement Keys

NOTE: Only Key Fobs that are programmed to the vehicle electronics can be used to start and operate the vehicle. Once a Key Fob is programmed to a vehicle, it cannot be programmed to any other vehicle.

CAUTION!

Always remove the Sentry Keys® from the vehicle and lock all doors when leaving the vehicle unattended.

At the time of purchase, the original owner is provided with a four-digit Personal Identification Number (PIN). Keep the PIN in a secure location. This number is required for authorized dealer replacement of Key Fobs.

Duplication of Key Fobs may be performed at an authorized dealer, this procedure consists of programming a blank Key Fob to the vehicle electronics. A blank Key Fob is one that has never been programmed.

NOTE:

- When having the Sentry Key® Immobilizer System serviced, bring all vehicle keys with you to an authorized dealer.
- If a programmed Key Fob is lost, see your authorized dealer to have all remaining Key Fobs erased from the system's memory. This will prevent the lost Key Fobs from starting your vehicle. The remaining Keys Fobs must then be reprogrammed.

Customer Key Programming

Programming Key Fobs or RKE transmitters may be performed at an authorized dealer.

General Information

The Sentry Key® system complies with FCC rules Part 15 and with RSS-210 of Industry Canada. Operation is subject to the following conditions:

- This device may not cause harmful interference.
- This device must accept any interference that may be received, including interference that may cause undesired operation.

VEHICLE SECURITY ALARM — IF EQUIPPED

The Vehicle Security Alarm monitors the vehicle doors and ignition for unauthorized operation. When the Vehicle Security Alarm is activated, interior switches for door locks are disabled. The system provides both audible and visible signals, for the first three minutes the horn will sound and the headlights, park lamps and/or turn signals will flash and Vehicle Security Light will flash repeatedly. For an additional 15 minutes only, the headlights, park lamps and/or turn signals and Vehicle Security Light will flash. Use of the Sentry Key® will disable the alarm.

Rearming Of The System

The Vehicle Security Alarm will rearm itself after the 15 additional minutes of headlights and Vehicle Security Light flashing, if the system has not been disabled. If the condition which initiated the alarm is still present, the system will ignore that condition and monitor the remaining doors and ignition.

To Arm The System

The Vehicle Security Alarm will set when you use the power door locks, or use the Remote Keyless Entry (RKE) transmitter to lock the doors. After all the doors are locked and closed, the Vehicle Security Light in the instrument panel cluster will flash rapidly for about 16 seconds to indicate that the alarm is being set. After the alarm is set, the Vehicle Security Light will flash at a slower rate to indicate that the system is armed.

NOTE: If the Vehicle Security Light stays on continuously during vehicle operation, have the system checked by an authorized dealer.

To Disarm The System

Use the RKE transmitter to unlock the door. If something has triggered the system in your absence, the horn will sound three times when you unlock the doors and the Vehicle Security Light will flash for 30 seconds. Check the vehicle for tampering.

The Vehicle Security Alarm will also disarm if the vehicle is started with a programmed Sentry Key®. To exit the alarming mode, press the RKE transmitter UNLOCK button, or start the vehicle with a programmed Sentry Key®.

The Vehicle Security Alarm is designed to protect your vehicle; however, you can create conditions where the system will give you a false alarm. If one of the previously described arming sequences has occurred, the Vehicle Security Alarm will arm regardless of whether you are in the vehicle or not. If you remain in the vehicle and open a door, the alarm will sound. If this occurs, disarm the Vehicle Security Alarm.

ILLUMINATED ENTRY — IF EQUIPPED

The courtesy lights will turn on when you use the Remote Keyless Entry (RKE) transmitter to unlock the doors or open any door.

This feature also turns on the approach lighting in the outside mirrors (if equipped). Refer to “Mirrors” in “Understanding The Features Of Your Vehicle” for further information.

The lights will fade to off after approximately 30 seconds, or they will immediately fade to off once the ignition switch is turned to ON/RUN from the OFF position.

NOTE:

- The front courtesy overhead console and door courtesy lights do not turn off if the dimmer control is in the "Dome ON" position (extreme top position).
- The illuminated entry system will not operate if the dimmer control is in the "dome defeat" position (extreme bottom position).

REMOTE KEYLESS ENTRY (RKE) — IF EQUIPPED

The RKE system allows you to lock or unlock the doors and activate the Panic Alarm from distances up to approximately 66 ft (20 m) using a hand-held radio transmitter with integrated key. The transmitter does not need to be pointed at the vehicle to activate the system.

NOTE: Inserting the Key Fob with RKE transmitter into the ignition switch disables the system from responding to any button presses from that RKE transmitter. Driving at speeds 5 mph (8 km/h) and above disables the system from responding to all RKE transmitter buttons for all RKE transmitters.

Key Fob With Remote Keyless Entry (RKE) Transmitter

To Unlock The Doors

Press and release the UNLOCK button on the RKE transmitter once to unlock the driver's door (If EVIC is

setup for driver door first, otherwise this will unlock all doors), or twice within five seconds to unlock all doors. The turn signal lights will flash to acknowledge the unlock signal. The illuminated entry system will also turn on.

Remote Key Unlock, Driver Door/All Doors First
This feature lets you program the system to unlock either the driver's door or all doors on the first press of the UNLOCK button on the RKE transmitter. To change the current setting, proceed as follows:

- For vehicles equipped with the EVIC, refer to "Electronic Vehicle Information Center (EVIC)/Customer-Programmable Features (System Setup)" in "Understanding Your Instrument Panel" for further information.
- For vehicles not equipped with the EVIC, perform the following procedure:

1. Press and hold the LOCK button on a programmed RKE transmitter for at least four seconds, but no longer than ten seconds. Then, press and hold the UNLOCK button while still holding the LOCK button.

2. Release both buttons at the same time.

3. Test the feature while outside of the vehicle by pressing the LOCK/UNLOCK buttons on the RKE transmitter with the ignition switch in the OFF position and the key removed.

4. Repeat these steps if you want to return this feature to its previous setting.

NOTE: Pressing the LOCK button on the RKE transmitter while you are inside the vehicle will activate the Vehicle Security Alarm System. Opening a door with the Vehicle Security Alarm System activated will cause the alarm to sound. Press the UNLOCK button to deactivate the Vehicle Security Alarm System.

Flash Lamps With Remote Key Lock

This feature will cause the turn signal lights to flash when the doors are locked or unlocked with the RKE transmitter. This feature can be turned on or turned off. To change the current setting, proceed as follows:

- For vehicles equipped with the EVIC, refer to "Electronic Vehicle Information Center (EVIC)/Customer-Programmable Features (System Setup)" in "Understanding Your Instrument Panel" for further information.
- For vehicles not equipped with the EVIC, perform the following procedure:

1. Press and hold the UNLOCK button on a programmed RKE transmitter for at least four seconds, but no longer than ten seconds. Then, press and hold the LOCK button while still holding the UNLOCK button.

2. Release both buttons at the same time.

3. Test the feature while outside of the vehicle by pressing the LOCK/UNLOCK buttons on the RKE transmitter with the ignition switch in the OFF position and the key removed.

4. Repeat these steps if you want to return this feature to its previous setting.

NOTE: Pressing the LOCK button on the RKE transmitter while you are in the vehicle will activate the Vehicle Security Alarm System. Opening a door with the Vehicle Security Alarm System activated will cause the alarm to sound. Press the UNLOCK button to deactivate the Vehicle Security Alarm System.

To Lock The Doors

Press and release the LOCK button on the RKE transmitter to lock all doors. The turn signal lights will flash and the horn will chirp to acknowledge the signal.

Sound Horn With Remote Key Lock

This feature will cause the horn to chirp when the doors are locked with the RKE transmitter. This feature can be turned on or turned off. To change the current setting, proceed as follows:

- For vehicles equipped with the EVIC, refer to "Electronic Vehicle Information Center (EVIC)/Customer-Programmable Features (System Setup)" in "Understanding Your Instrument Panel" for further information.
- For vehicles not equipped with the EVIC, perform the following procedure:

1. Press the LOCK button on a programmed RKE transmitter for at least four seconds, but no longer than ten seconds. Then, press the PANIC button while still holding the LOCK button.

2. Release both buttons at the same time.

3. Test the feature while outside of the vehicle by pressing the LOCK button on the RKE transmitter with the ignition switch in the OFF position and the key removed.

4. Repeat these steps if you want to return this feature to its previous setting.

NOTE: Pressing the LOCK button on the RKE transmitter while you are in the vehicle will activate the Vehicle Security Alarm System. Opening a door with the Vehicle Security Alarm System activated will cause the alarm to sound. Press the UNLOCK button to deactivate the Vehicle Security Alarm System.

Remote Open Window Feature — If Equipped

This feature allows you to remotely lower both front door windows at the same time. To use this feature, press and release the UNLOCK button on the RKE transmitter and then immediately press and hold the UNLOCK button until the windows lower to the level desired or until they lower completely.

Using The Panic Alarm

To turn the Panic Alarm feature ON or OFF, press and hold the PANIC button on the RKE transmitter for at least one second and release. When the Panic Alarm is on, the headlights and park lights will flash, the horn will pulse on and off, and the interior lights will turn on.

The Panic Alarm will stay on for three minutes unless you turn it off by either pressing the PANIC button a second time or drive the vehicle at a speed of 15 mph (24 km/h) or greater.

NOTE:

- The interior lights will turn off if you turn the ignition switch to the ACC or ON/RUN position while the Panic Alarm is activated. However, the exterior lights and horn will remain on.
- You may need to be less than 35 ft (11 m) from the vehicle when using the RKE transmitter to turn off the Panic Alarm due to the radio frequency noises emitted by the system.

Programming Additional Transmitters

If you do not have a programmed RKE transmitter, contact your authorized dealer for details.

Transmitter Battery Replacement

The recommended replacement battery is one CR2032 battery.

NOTE:

- Perchlorate Material — special handling may apply. See www.dtsc.ca.gov/hazardouswaste/perchlorate
- Do not touch the battery terminals that are on the back housing or the printed circuit board.

1. With the RKE transmitter buttons facing down, use a flat blade screwdriver to pry the two halves of the RKE transmitter apart. Make sure not to damage the seal during removal.

2. Remove and replace the battery. Avoid touching the new battery with your fingers. Skin oils may cause battery deterioration. If you touch a battery, clean it with rubbing alcohol.

3. To assemble the RKE transmitter case, snap the two halves together.

General Information

This device complies with Part 15 of the FCC rules and RSS 210 of Industry Canada. Operation is subject to the following conditions:

- This device may not cause harmful interference.
- This device must accept any interference received, including interference that may cause undesired operation.

NOTE: Changes or modifications not expressly approved by the party responsible for compliance could void the user's authority to operate the equipment.

If your RKE transmitter fails to operate from a normal distance, check for these two conditions:

1. A weak battery in the RKE transmitter. The expected life of the battery is a minimum of three years.

2. Closeness to a radio transmitter such as a radio station tower, airport transmitter, and some mobile or CB radios.

REMOTE STARTING SYSTEM — IF EQUIPPED

This system uses the Remote Keyless Entry (RKE) transmitter to start the engine conveniently from outside the vehicle while still maintaining security. The system has a range of approximately 300 ft (91 m).

NOTE: The vehicle must be equipped with an automatic transmission to be equipped with Remote Start.

How To Use Remote Start

All of the following conditions must be met before the engine will remote start:

- Shift lever in PARK
- Doors closed
- Hood closed
- HAZARD switch off
- BRAKE switch inactive (brake pedal not pressed)
- Ignition key removed from ignition switch
- Battery at an acceptable charge level
- RKE PANIC button not pressed
- Fuel meets minimum requirement

WARNING!

- **Do not start or run an engine in a closed garage or confined area. Exhaust gas contains Carbon Monoxide (CO) which is odorless and colorless. Carbon Monoxide is poisonous and can cause serious injury or death when inhaled.**
- **Keep Remote Keyless Entry (RKE) transmitters away from children. Operation of the Remote Start System, windows, door locks or other controls could cause serious injury or death.**

Remote Start Abort Message On Electronic Vehicle Information Center (EVIC) — If Equipped

The following messages will display in the EVIC if the vehicle fails to remote start or exits remote start prematurely:

- Remote Start Aborted - Door Ajar
- Remote Start Aborted - Hood Ajar
- Remote Start Aborted - Fuel Low
- Remote Start Aborted - System Fault

The EVIC message stays active until the ignition is turned to the ON/RUN position.

To Enter Remote Start Mode

Press and release the REMOTE START button on the RKE transmitter twice within five seconds. The parking lights will flash and the horn will chirp twice (if programmed). Once the vehicle has started, the engine will run for 15 minutes.

NOTE:

- The park lamps will turn on and remain on during Remote Start mode.
- For security, power window and power sunroof operation (if equipped) are disabled when the vehicle is in the Remote Start mode.
- The engine can be started two consecutive times (two 15-minute cycles) with the RKE transmitter. However, the ignition switch must be cycled to the ON/RUN position before you can repeat the start sequence for a third cycle.

To Exit Remote Start Mode Without Driving The Vehicle

Press and release the REMOTE START button one time or allow the engine to run for the entire 15-minute cycle.

NOTE: To avoid unintentional shut downs, the system will disable the one time press of the REMOTE START button for two seconds after receiving a valid Remote Start request.

To Exit Remote Start Mode And Drive The Vehicle
Before the end of the 15-minute cycle, press and release the UNLOCK button on the RKE transmitter to unlock the doors and disarm the Vehicle Security Alarm System (if equipped). Insert the Key Fob into the ignition switch and turn the switch to the ON/RUN position.

NOTE:
- The ignition switch must be in the ON/RUN position in order to drive the vehicle.
- For vehicles equipped with the Electronic Vehicle Information Center (EVIC), the message "Insert Key/ Turn To On" will flash in the EVIC until you insert the Key Fob into the ignition swich. Once inserted, the message "Turn To On" will flash in the EVIC until you turn the ignition switch to the ON/RUN position.

Remote Start Comfort Systems — If Equipped
When remote start is activated, the heated steering wheel, and driver heated seat features will automatically turn on in cold weather. In warm weather, the driver vented seat feature will automatically turn on when the remote start is activated. These features will stay on through the duration of remote start or until the ignition switch is turned to the ON/RUN position.

The Remote Start Comfort System can be activated and deactivated through the Electronic Vehicle Information Center (EVIC). For more information on Remote Start Comfort System operation refer to "Electronic Vehicle Information Center (EVIC)/Customer-Programmable Features (System Setup)" in "Understanding Your Instrument Panel".

DOOR LOCKS

Manual Door Locks

Front and rear doors may be locked by moving the lock knob down or unlocked by moving the lock knob up.

Front doors may be opened with the inside door handle without lifting the lock knob.

Doors locked before closing will remain locked when closed.

The emergency key will unlock the driver door lock on your vehicle.

WARNING!

- **For personal security and safety in the event of an accident, lock the vehicle doors when you drive as well as when you park and leave the vehicle.**
- **Never leave children alone in a vehicle. Leaving unattended children in a vehicle is dangerous for a number of reasons. A child or others could be seriously or fatally injured. Don't leave the key in the ignition. A child could operate power windows, other controls, or move the vehicle.**

Power Door Locks — If Equipped

A power door LOCK switch is on each front door trim panel. Use this switch to lock or unlock the doors.

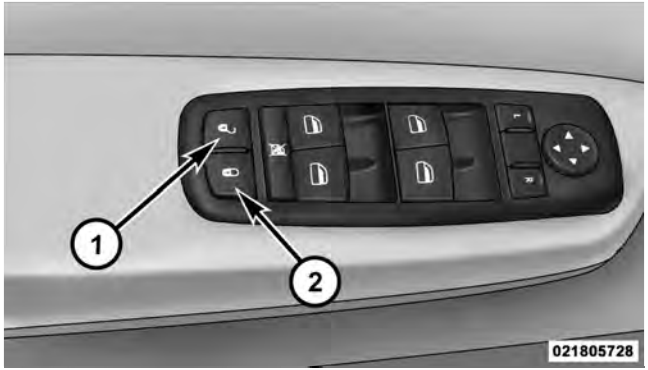

Power Door Lock Switch Location

1 - Unlock 2 - Lock

If you press the power door LOCK switch while the Key Fob is in the ignition, and any front door is open, the power locks will not operate. This prevents you from accidentally locking your Key Fob in the vehicle. Removing the Key Fob or closing the door will allow the locks to operate. A chime will sound if the Key Fob is in the ignition switch and a door is open, as a reminder to remove the Key Fob.

Automatic Door Locks — If Equipped

The doors will lock automatically if all of the following conditions are met:

1. The Automatic Door Locks feature is enabled
2. The transmission is in gear
3. All doors are closed
4. The throttle is pressed
5. The vehicle speed is above 15 mph (24 km/h)

6. The doors were not previously locked using the power door lock switch or Remote Keyless Entry (RKE) transmitter

Automatic Door Locks Programming — If Equipped

The Automatic Door Locks feature can be enabled or disabled as follows:

- For vehicles equipped with the Electronic Vehicle Information Center (EVIC), refer to "Electronic Vehicle Information Center (EVIC) — If Equipped/Personal Settings (Customer-Programmable Features)" in "Understanding Your Instrument Panel" for further information.
- For vehicles not equipped with the EVIC, perform the following procedure:

1. Close all doors and place the key in the ignition switch.

2. Within 15 seconds, cycle the ignition switch between LOCK and ON/RUN and then back to LOCK four times ending up in the LOCK position (do not start the engine).

3. Within 30 seconds, press the power door LOCK switch to lock the doors.

4. A single chime will indicate the completion of the programming.

5. Repeat these steps if you want to return this feature to its previous setting.

NOTE:

- If you do not hear the chime it means that the system did not enter the programming mode and you will need to repeat the procedure.
- Use the Automatic Door Locks feature in accordance with local laws.

Auto Unlock Doors — If Equipped

This feature unlocks all of the doors of the vehicle when either front door is opened. This will occur only after the vehicle has been shifted into the PARK position after the vehicle has been driven (shifted out of PARK and all doors closed).

Auto Unlock Doors Programming — If Equipped

The Auto Unlock Doors feature can be enabled or disabled as follows:

- For vehicles equipped with the EVIC, refer to "Electronic Vehicle Information Center (EVIC)/Personal Settings (System Setup)" in "Understanding Your Instrument Panel" for further information.
- For vehicles not equipped with the EVIC, perform the following procedure:

1. Enter your vehicle and close all doors.
2. Fasten your seat belt. (Fastening the seat belt will cancel any chimes that may be confusing during this programming procedure.)
3. Insert the Key Fob into the ignition.
4. Within 15 seconds, cycle the Key Fob from the OFF position to the ON/RUN position a minimum of four times, ending in the OFF position. **(Do not start the engine)**.
5. Within 30 seconds, press the driver's door UNLOCK switch.
6. A single chime will sound to indicate the feature has been changed.
7. Repeat the above steps to alternate the availability of this feature.
8. If a chime is not heard, the program mode was canceled before the feature could be changed. If necessary, repeat the above procedure.

Child-Protection Door Lock

To provide a safer environment for children riding in the rear seat, the rear doors (if equipped) of your vehicle have the Child-Protection Door Lock system.

Child-Protection Door Lock Location

To use the system, open each rear door, use a flat blade screwdriver (or emergency key) and rotate the dial to engage and disengage the Child-Protection locks. When the system on a door is engaged, that door can only be opened by using the outside door handle even if the inside door lock is in the unlocked position.

Child Lock Control

WARNING!

Avoid trapping anyone in a vehicle in a collision. Remember that the rear doors can only be opened from the outside when the Child-Protection locks are engaged.

NOTE:

- After setting the Child-Protection Door Lock system, always test the door from the inside to make certain it is in the desired position.
- For emergency exit with the system engaged, move the door lock switch to the UNLOCK position, roll down the window and open the door with the outside door handle.

WINDOWS

Power Windows – If Equipped

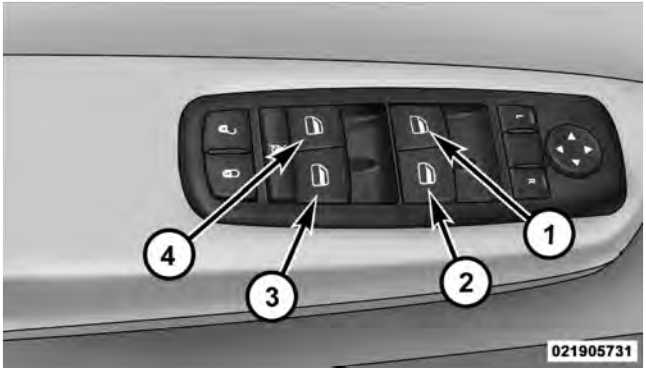

Power Window Switches

1 – Left Front	3 – Right Rear
2 – Right Front	4 – Left Rear

The control on the left front door panel has UP-DOWN switches that give you fingertip control of all power

windows. There is a single opening and closing switch on the front passenger door for passenger window control and on the rear doors of Quad Cab®, Mega Cab® and Crew Cab models. The windows will operate when the ignition switch is turned to the ON/RUN or ACC position, and for up to 10 minutes after the ignition is turned OFF or until a front door is opened.

NOTE: The Key Off Power Delay feature will allow the power windows to operate for up to 10 minutes after the ignition is turned OFF. This feature is cancelled when either front door is opened.

WARNING!

Never leave children alone in a vehicle. Leaving unattended children in a vehicle is dangerous for a number of reasons. A child or others could be seriously or fatally injured. Don't leave the key in the ignition. A child could operate power windows, other controls, or move the vehicle.

Auto-Down

Both the driver and front passenger window switch have an Auto-Down feature. Press the window switch past the first detent, release, and the window will go down automatically. To cancel the Auto-Down movement, operate the switch in either the up or down direction and release the switch.

To stop the window from going all the way down during the Auto-Down operation, pull up on the switch briefly.

To open the window part way, press to the first detent and release it when you want the window to stop.

Auto-Up Feature With Anti-Pinch Protection (4-Door Models Driver And Front Passenger Door Only) — If Equipped

Lift the window switch fully upward to the second detent, release, and the window will go up automatically.

To stop the window from going all the way up during the Auto Up operation, push down on the switch briefly.

To close the window part way, lift the window switch to the first detent and release when you want the window to stop.

NOTE: If the window runs into any obstacle during the auto-closure, it will reverse direction and then go back down. Remove the obstacle and use the window switch again to close the window. Any impact due to rough road conditions may trigger the auto reverse function unexpectedly during auto closure. If this happens, pull the switch lightly to the first detent and hold to close the window manually.

WARNING!

There is no anti-pinch protection when the window is almost closed. Be sure to clear all objects from the window before closing.

Auto-Up Reset

It may be necessary at some point in time to reactivate the Auto-up/Auto-down feature. To do so, perform the following steps:

1. Pull the window switch up to close the window completely and continue to hold the switch up for an additional two seconds after the window is closed.

2. Push the window switch down firmly to the second detent to open the window completely and continue to hold the switch down for an additional two seconds after the window is fully open.

Window LOCKOUT Switch — 4–Door Models

The window LOCKOUT switch on the driver's door allows you to disable the window control on the other doors. To disable the window controls on the other doors, press the window LOCK button into the latched or down position. To enable the window controls, press the window LOCK button again and return the switch to the released or up position.

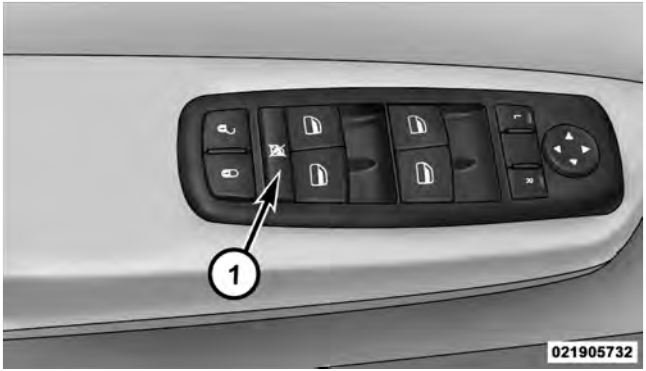

Window Lockout Switch

1 – Window Lockout Switch

Wind Buffeting

Wind buffeting can be described as the perception of pressure on the ears or a helicopter-type sound in the ears. Your vehicle may exhibit wind buffeting with the windows down or in partially open positions. This is a

normal occurrence and can be minimized. If the rear windows are open and buffeting occurs, open the front and rear windows together to minimize the buffeting.

OCCUPANT RESTRAINTS

Some of the most important safety features in your vehicle are the restraint systems:

- Three-point lap and shoulder belts for the driver and all passengers
- Front seat belts may incorporate pretensioners that may enhance occupant protection by managing occupant energy during an impact event
- Advanced Front Airbags for driver and front passenger
- Supplemental Side Airbag Inflatable Curtains (SABIC) — if equipped
- An energy-absorbing steering column and steering wheel
- Knee bolsters/blockers for front seat occupants
- All seat belt systems (except driver's and second row center position) include Automatic Locking Retractors (ALRs), which lock the seat belt webbing into position by extending the belt all the way out and then adjusting the belt to the desired length to restrain a child seat or secure a large item in a seat — if equipped

If you will be carrying children too small for adult-sized seat belts, the seat belts or the Lower Anchors and Tether for CHildren (LATCH) feature also can be used to hold infant and child restraint systems. For more information on LATCH, refer to Lower Anchors and Tether for CHildren (LATCH).

NOTE: The Advanced Front Airbags have a multistage inflator design. This allows the airbag to have different rates of inflation based on the severity and type of collision.

Please pay close attention to the information in this section. It tells you how to use your restraint system properly, to keep you and your passengers as safe as possible.

WARNING!

In an accident, you and your passengers can suffer much greater injuries if you are not properly buckled up. You can strike the interior of your vehicle or other passengers, or you can be thrown out of the vehicle. Always be sure you and others in your vehicle are buckled up properly.

Buckle up even though you are an excellent driver, even on short trips. Someone on the road may be a poor driver and cause an accident that includes you. This can happen far away from home or on your own street.

Research has shown that seat belts save lives, and they can reduce the seriousness of injuries in an accident. Some of the worst injuries happen when people are thrown from the vehicle. Seat belts reduce the possibility of ejection and the risk of injury caused by striking the inside of the vehicle. Everyone in a motor vehicle should be belted at all times.

Lap/Shoulder Belts

All seating positions except the Quad Cab®, Mega Cab® and Crew Cab front center seating position have combination lap/shoulder belts. The belt webbing retractor is designed to lock during very sudden stops or accidents. This feature allows the shoulder part of the belt to move freely with you under normal conditions. However, in an

accident the belt will lock and reduce the risk of you striking the inside of the vehicle or being thrown out.

WARNING!

- **Wearing a seat belt incorrectly is dangerous. Seat belts are designed to go around the large bones of your body. These are the strongest parts of your body and can take the forces of an accident best.**
- **Two people should never be belted into a single seat belt. People belted together can crash into one another in an accident, hurting one another badly. Never use a lap/shoulder belt or a lap belt for more than one person, no matter what their size.**
- **It is dangerous to ride in a cargo area, inside or outside of a vehicle. In an accident, people riding in these areas are more likely to be seriously injured or killed.**

(Continued)

WARNING! (Continued)

- **Do not allow people to ride in any area of your vehicle that is not equipped with seats and seat belts.**
- **Be sure everyone in your vehicle is in a seat and using a seat belt properly.**
- **Wearing your belt in the wrong place could make your injuries in an accident much worse. You might suffer internal injuries, or you could even slide out of part of the belt. Follow these instructions to wear your seat belt safely and to keep your passengers safe, too.**

Lap/Shoulder Belt Operating Instructions

1. Enter the vehicle and close the door. Sit back and adjust the seat.

2. The seat belt latch plate is above the back of the front seat, next to your arm in the rear seat. Grasp the latch

plate and pull out the belt. Slide the latch plate up the webbing as far as necessary to allow the belt to go around your lap.

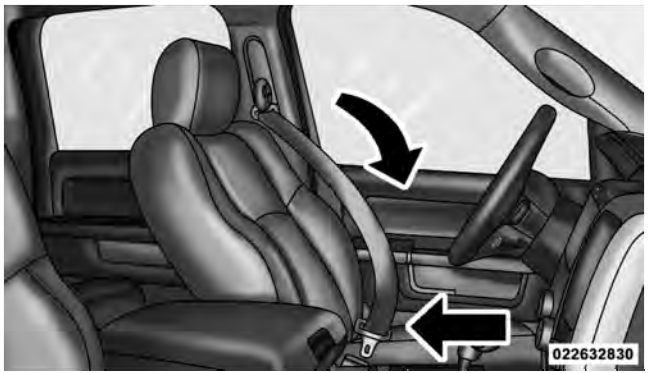

Pulling Out Latch Plate And Webbing

3. When the belt is long enough to fit, insert the latch plate into the buckle until you hear a "click."

Latch Plate To Buckle

WARNING!

- **A belt buckled into the wrong buckle will not protect you properly. The lap portion could ride too high on your body, possibly causing internal injuries. Always buckle your belt into the buckle nearest you.**
- **A belt that is too loose will not protect you properly. In a sudden stop you could move too far forward, increasing the possibility of injury. Wear your seat belt snugly.**

(Continued)

WARNING! (Continued)

- **A belt that is worn under your arm is dangerous. Your body could strike the inside surfaces of the vehicle in an accident, increasing head and neck injury. A belt worn under the arm can cause internal injuries. Ribs aren't as strong as shoulder bones. Wear the belt over your shoulder so that your strongest bones will take the force in a collision.**
- **A shoulder belt placed behind you will not protect you from injury during an accident. You are more likely to hit your head in a collision if you do not wear your shoulder belt. The lap and shoulder belt are meant to be used together.**

4. Position the lap belt across your thighs, below your abdomen. To remove slack in the lap belt portion, pull up on the shoulder belt. To loosen the lap belt if it is too tight,

tilt the latch plate and pull on the lap belt. A snug belt reduces the risk of sliding under the belt in an accident.

Removing Slack From Belt

WARNING!

- **A lap belt worn too high can increase the risk of internal injury in an accident. The belt forces won't be at the strong hip and pelvic bones, but across your abdomen. Always wear the lap belt as low as possible and keep it snug.**
- **A twisted belt will not protect you properly. In a collision, it could even cut into you. Be sure the belt is straight. If you can't straighten a belt in a vehicle, take it to your authorized dealer immediately and have it fixed.**

5. Position the shoulder belt on your chest so that it is comfortable and not resting on your neck. The retractor will withdraw any slack in the belt.

6. To release the belt, push the red button on the buckle. The belt will automatically retract to its stowed position. If necessary, slide the latch plate down the webbing to allow the belt to retract fully.

WARNING!

A frayed or torn belt could rip apart in an accident and leave you with no protection. Inspect the belt system periodically, checking for cuts, frays, or loose parts. Damaged parts must be replaced immediately. Do not disassemble or modify the system. Seat belt assemblies must be replaced after an accident if they have been damaged (bent retractor, torn webbing, etc.) or if the airbag deployed.

Regular Cab Front Center Three Point Belt

1. The front center seat belt on the Regular Cab may be disconnected to open up utilization of the storage areas behind the front seats. The black latch plate can be detached from the black keyed seat belt buckle located on the inboard side of the passenger seat. Insert the seat belt tongue into the center red slot on the black buckle. The black buckle latch plate can be removed when the seat belt tongue is pressed into the buckle. Allow the retractor to take up the extra webbing, and the buckles will hang vertically from the cab back exit bezel, thus freeing up all the area behind the front seats.

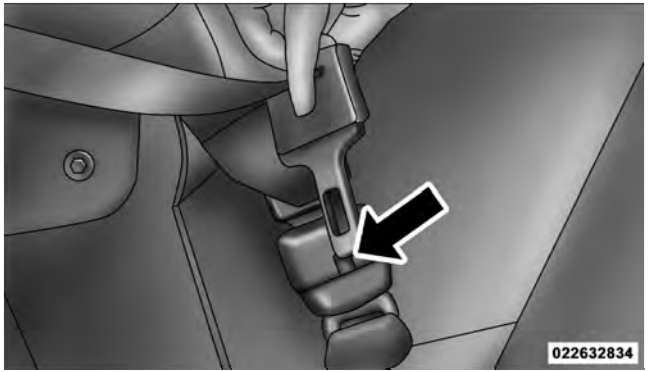

Detaching Buckle With Seat Belt Tongue

2. To reattach the seat belt to the front center seat, pull the black buckle latch plate forward from the cab back panel and insert it into the black keyed buckle until there is an audible "click". For proper seatbelt usage, refer "Lap/Shoulder Belt Operating Instructions".

WARNING!

- **If the black latch and black buckle are not properly connected when the seat belt is used by an occupant, the seat belt will not be able to provide proper restraint and will increase the risk of injury in an accident.**
- **When reattaching the black latch and black buckle, ensure the seat belt webbing is not twisted. If the webbing is twisted, follow the preceding procedure to detach the black latch and black buckle, untwist the webbing, and reattach the black latch and black buckle.**

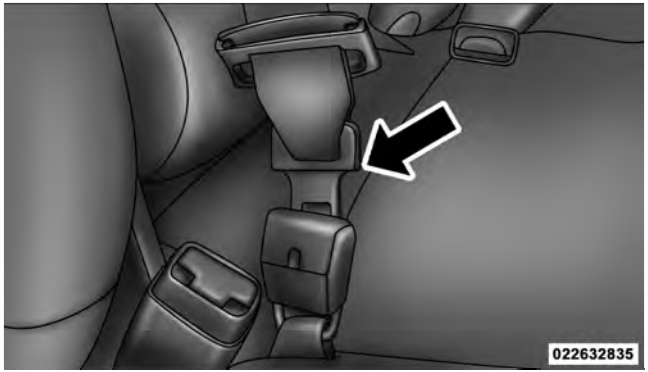

Inserting Latch Plate

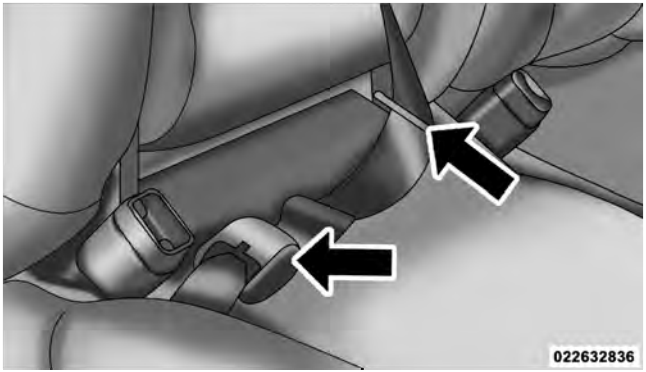

In Use Position

Lap/Shoulder Belt Untwisting Procedure

Use the following procedure to untwist a twisted lap/shoulder belt.

1. Position the latch plate as close as possible to the anchor point.

2. At about 6 to 12 in (15 to 30 cm) above the latch plate, grasp and twist the belt webbing 180 degrees to create a fold that begins immediately above the latch plate.

3. Slide the latch plate upward over the folded webbing. The folded webbing must enter the slot at the top of the latch plate.

4. Continue to slide the latch plate up until it clears the folded webbing.

Adjustable Upper Shoulder Belt Anchorage

In the front row outboard seats, the shoulder belt can be adjusted upward or downward to help position the belt away from your neck. Squeeze the anchorage button located on the upper belt guide to release the anchorage, and then move it up or down to the position that fits you best.

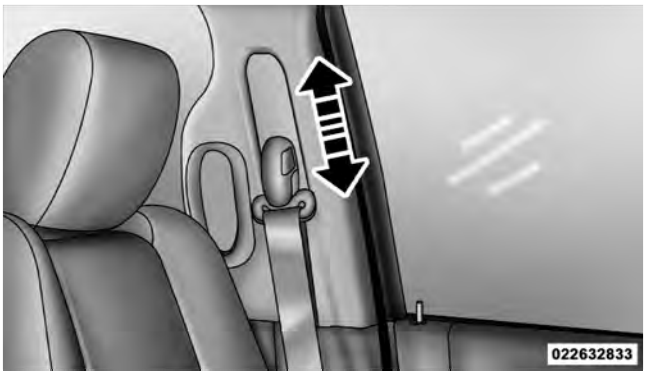

Adjusting Upper Shoulder Belt

As a guide, if you are shorter than average you will prefer a lower position, and if you are taller than average

you will prefer a higher position. When you release the anchorage, try to move it up or down to make sure that it is locked in position.

Center Lap Belts

The center seating position for the Quad Cab®, Mega Cab® and Crew Cab front seat has a lap belt only. To fasten the lap belt, slide the latch plate into the buckle until you hear a "click." To lengthen the lap belt, tilt the latch plate and pull. To remove slack, pull the loose end of the webbing. Wear the lap belt snug against the hips. Sit back and erect in the seat, then adjust the belt as tightly as is comfortable.

WARNING!

- **A lap belt worn too loose or too high is dangerous.**
- **A belt worn too loose can allow you to slip down and under the belt in a collision.**

(Continued)

WARNING! (Continued)

- **A belt that is too loose or too high will apply crash forces to the abdomen, not to the stronger hip bones. In either case, the risk of internal injuries is greater. Wear a lap belt low and snug.**

Energy Management Feature

This vehicle has a safety belt system with an energy management feature in the front seating positions to help further reduce the risk of injury in the event of a head-on accident.

This safety belt system has a retractor assembly that is designed to release webbing in a controlled manner. This feature is designed to help reduce the belt force acting on the occupant's chest.

WARNING!

- **The belt and retractor assembly must be replaced if the seat belt assembly "Automatic Locking Retractor (ALR)" feature or any other seat belt function is not working properly when checked according to the procedures in the Service Manual.**
- **Failure to replace the belt and retractor assembly could increase the risk of injury in accidents.**

Seat Belts In Passenger Seating Positions

The seat belts in the passenger seating positions are equipped with Automatic Locking Retractors (ALR) which are used to secure a child restraint system. For additional information, refer to "Installing Child Restraints Using The Vehicle Seat Belt" under the "Child Restraints" section. The chart below defines the type of feature for each seating position.

	Driver	Center	Passenger
First Row	N/A	N/A	ALR
Second Row	ALR	Cinch	ALR
Third Row	N/A	N/A	N/A

- N/A — Not Applicable
- ALR — Automatic Locking Retractor

If the passenger seating position is equipped with an ALR and is being used for normal usage:

Only pull the belt webbing out far enough to comfortably wrap around the occupant's mid-section so as to not activate the ALR. If the ALR is activated, you will hear a ratcheting sound as the belt retracts. Allow the webbing to retract completely in this case and then carefully pull out only the amount of webbing necessary to comfortably wrap around the occupant's mid-section. Slide the latch plate into the buckle until you hear a "click."

Automatic Locking Retractor (ALR) Mode – If Equipped

In this mode, the shoulder belt is automatically pre-locked. The belt will still retract to remove any slack in the shoulder belt.

When To Use The Automatic Locking Mode

Use the Automatic Locking Mode anytime a child safety seat is installed in a seating position that has a belt with this feature. Children 12 years old and under should always be properly restrained in the rear seat.

How To Engage The Automatic Locking Mode

1. Buckle the combination lap and shoulder belt.

2. Grasp the shoulder portion and pull downward until the entire belt is extracted.

3. Allow the belt to retract. As the belt retracts, you will hear a clicking sound. This indicates the safety belt is now in the Automatic Locking Mode.

How To Disengage The Automatic Locking Mode

Unbuckle the combination lap/shoulder belt and allow it to retract completely to disengage the Automatic Locking Mode and activate the vehicle sensitive (emergency) locking mode.

WARNING!

- **The belt and retractor assembly must be replaced if the seat belt assembly Automatic Locking Retractor (ALR) feature or any other seat belt function is not working properly when checked according to the procedures in the Service Manual.**
- **Failure to replace the belt and retractor assembly could increase the risk of injury in collisions.**

Seat Belt Pretensioners — If Equipped

The seat belts for both front seating positions may be equipped with pretensioning devices that are designed to remove slack from the seat belt in the event of an

accident. These devices may improve the performance of the seat belt by assuring that the belt is tight around the occupant early in a collision. Pretensioners work for all size occupants, including those in child restraints.

NOTE: These devices are not a substitute for proper seat belt placement by the occupant. The seat belt still must be worn snugly and positioned properly.

The pretensioners are triggered by the Occupant Restraint Controller (ORC). Like the airbags, the pretensioners are single use items. A deployed pretensioner or a deployed airbag must be replaced immediately.

Enhanced Seat Belt Use Reminder System (BeltAlert®)

BeltAlert® is a feature intended to remind the driver to fasten their seatbelt. This feature is active whenever the ignition is on. If the driver is unbelted, the Seat Belt Reminder Light will turn on and remain on until the driver seatbelt is fastened. BeltAlert® triggers within 60 seconds of vehicle speed over 5 mph (8 km/h). The reminder sequence lasts for 96 seconds or until the driver seatbelt is fastened. After the sequence completes, the Seat Belt Reminder Light remains illuminated until the driver front belt is fastened. The driver should instruct all other occupants to fasten their seatbelts. If the driver seatbelt is unbuckled while traveling at speeds greater than 5 mph (8 km/h), BeltAlert® will chime as a single notification and illuminate the Seat Belt Reminder Light, then will proceed to the 96 second reminder sequence.

BeltAlert® can be enabled or disabled by your authorized dealer or by performing the following procedure:

NOTE: The following steps must occur within the first 60 seconds of the ignition switch being turned to the ON/RUN or START position. Chrysler Group LLC does not recommend deactivating the BeltAlert®.

1. With all doors closed and the ignition switch in any position except ON/RUN or START, buckle the driver's seat belt.

2. Turn the ignition switch to the ON/RUN position and wait for the Seat Belt Reminder Light to turn off.

3. Within 60 seconds of starting the vehicle, unbuckle and then re-buckle the driver's seat belt at least three times within 60 seconds, ending with the seat belt buckled.

NOTE: Watch for the Seat Belt Reminder Light to turn on while the seat belt retracts and turn off while re-buckling the seat belt.

4. Turn the ignition switch to the LOCK position. A single chime will sound to signify that you have successfully completed the programming.

BeltAlert® can be reactivated by repeating this procedure.

NOTE: Although BeltAlert® has been deactivated, the Seat Belt Reminder Light will continue to illuminate while the driver's seat belt remains unbuckled or unretracted.

Seat Belts And Pregnant Women

We recommend that pregnant women use seat belts throughout their pregnancies. Keeping the mother safe is the best way to keep the baby safe.

Pregnant women should wear the lap part of the belt across the thighs and as snug across the hips as possible. Keep the belt low so that it does not come across the abdomen. That way the strong bones of the hips will take the force if there is an accident.

Seat Belt Extender

If a seat belt is too short even when fully extended, and the adjustable upper shoulder belt anchorage (if so equipped) is in its lowest position, your authorized dealer can provide you with a seat belt extender. This

extender should be used only if the existing belt is not long enough. When it is not required, remove the extender and store it.

WARNING!

Using a seat belt extender when not needed can increase the risk of injury in an accident. Only use the seat belt extender when the lap belt is not long enough when it is worn low and snug, and in the recommended seating positions. Remove and store the extender when not needed.

Supplemental Restraint System (SRS) – Airbags

This vehicle has Advanced Front Airbags for both the driver and front passenger as a supplement to the seat belt restraint systems. The driver's Advanced Front Airbag is mounted in the center of the steering wheel. The passenger's Advanced Front Airbag is mounted in the instrument panel, above the glove compartment. The words SRS AIRBAG are embossed on the airbag covers.

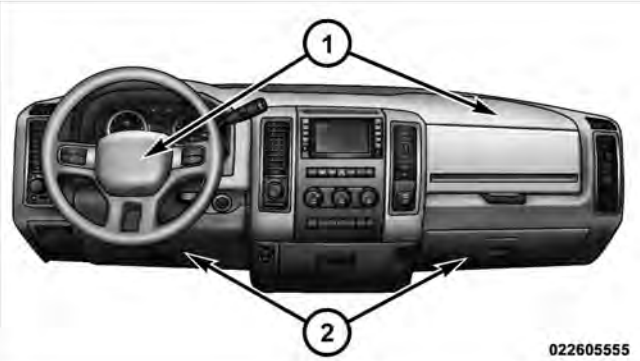

Advanced Front Airbag And Knee Bolster Locations

1 — Driver And Passenger Advanced Front Airbags
2 — Knee Bolster

NOTE: These airbags are certified to the new Federal regulations for Advanced Airbags.

The Advanced Front Airbags have a multistage inflator design. This allows the airbag to have different rates of inflation based on the severity and type of collision.

This vehicle may be equipped with driver and/or front passenger seat track position sensors that may adjust the inflation rate of the Advanced Front Airbags based upon seat position.

This vehicle may be equipped with a driver and/or front passenger seat belt buckle switch that detects whether the driver or front passenger seat belt is fastened. The seat belt buckle switch may adjust the inflation rate of the Advanced Front Airbags.

This vehicle may also be equipped with Supplemental Side Airbag Inflatable Curtains (SABIC) to protect the driver, front, and rear passengers sitting next to a window. If the vehicle is equipped with SABIC airbags, they are located above the side windows and their covers are also labeled: SRS AIRBAG.

NOTE:

- Airbag covers may not be obvious in the interior trim, but they will open during airbag deployment.
- After any accident, the vehicle should be taken to an authorized dealer immediately.

Airbag System Components

Your vehicle may be equipped with the following airbag system components:

- Occupant Restraint Controller (ORC)
- Airbag Warning Light
- Steering Wheel and Column
- Instrument Panel
- Knee Impact Bolster
- Driver Advanced Front Airbag
- Passenger Advanced Front Airbag

- Supplemental Side Airbag Inflatable Curtains (SABIC)
- Front and Side Impact Sensors
- Front Seat Belt Pretensioners, Seat Belt Buckle Switch, and Seat Track Position Sensors

Advanced Front Airbag Features

The Advanced Front Airbag system has multistage driver and front passenger airbags. This system provides output appropriate to the severity and type of collision as determined by the Occupant Restraint Controller (ORC), which may receive information from the front impact sensors (if equipped).

The first stage inflator is triggered immediately during an impact that requires airbag deployment. This low output is used in less severe collisions. A higher energy output is used for more severe collisions.

WARNING!

- **No objects should be placed over or near the airbag on the instrument panel, because any such objects could cause harm if the vehicle is in a collision severe enough to cause the airbag to inflate.**
- **Do not put anything on or around the airbag covers or attempt to open them manually. You may damage the airbags and you could be injured because the airbags may no longer be functional. The protective covers for the airbag cushions are designed to open only when the airbags are inflating.**
- **Do not drill, cut or tamper with the knee bolster in any way.**
- **Do not mount any accessories to the knee bolster such as alarm lights, stereos, citizen band radios, etc.**

Supplemental Side Airbag Inflatable Curtain (SABIC) — If Equipped

SABIC airbags may offer side-impact protection to front and rear seat outboard occupants in addition to that provided by the body structure. Each airbag features inflated chambers placed adjacent to the head of each outboard occupant that reduce the potential for side-impact head injuries. The curtains deploy downward, covering both windows on the impact side.

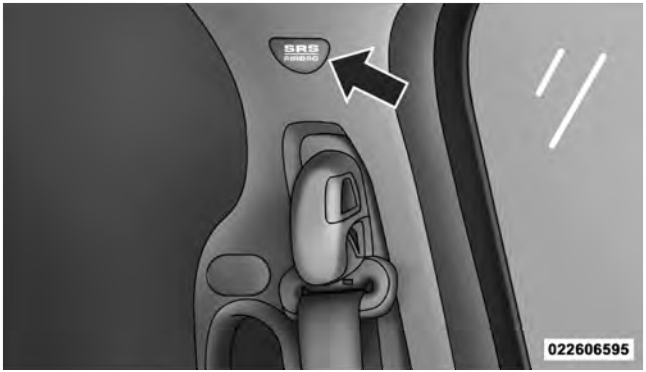

Supplemental Side Airbag Inflatable Curtain (SABIC) Label Location

NOTE: Airbag covers may not be obvious in the interior trim, but they will open during airbag deployment.

The system includes side impact sensors that are calibrated to deploy the side airbags during impacts that require airbag occupant protection.

WARNING!

- **If your vehicle is equipped with left and right Supplemental Side Airbag Inflatable Curtain (SABIC), do not stack luggage or other cargo up high enough to block the location of the SABIC. The area where the SABIC is located should remain free from any obstructions.**
- **Do not use accessory seat covers or place objects between you and the side airbags; the performance could be adversely affected and/or objects could be pushed into you, causing serious injury.**

WARNING! (Continued)

- **If your vehicle is equipped with SABIC airbags, do not have any accessory items installed which will alter the roof, including adding a sunroof to your vehicle. Do not add roof racks that require permanent attachments (bolts or screws) for installation on the vehicle roof. Do not drill into the roof of the vehicle for any reason.**

Knee Impact Bolsters

The Knee Impact Bolsters help protect the knees of the driver and the front passenger, and position front occupants for the best interaction with the Advanced Front Airbags.

Along with seat belts and pretensioners, Advanced Front Airbags work with the knee bolsters to provide improved protection for the driver and front passenger. Side airbags also work with seat belts to improve occupant protection.

Here are some simple steps you can take to minimize the risk of harm from a deploying airbag:

Children 12 years old and under should always ride buckled up in a rear seat.

WARNING!

Infants in rear-facing child restraints should never ride in the front seat of a vehicle with a passenger Advanced Front Airbag. An airbag deployment can cause severe injury or death to infants in that position.

Children that are not big enough to wear the vehicle seat belt properly (see Section on Child Restraints) should be secured in the rear seat in child restraints or belt-positioning booster seats. Older children who do not use child restraints or belt-positioning booster seats should ride properly buckled up in the rear seat. Never allow children to slide the shoulder belt behind them or under their arm.

If a child from 1 to 12 years old (not in a rear facing child seat) must ride in the front passenger seat, move the seat as far back as possible and use the proper child restraint. (Refer to “Child Restraints”)

You should read the instructions provided with your child restraint to make sure that you are using it properly.

All occupants should always wear their lap and shoulder belts properly.

The driver and front passenger seats should be moved back as far as practical to allow the Advanced Front Airbags room to inflate.

Do not lean against the door or window. If your vehicle has side airbags, and deployment occurs, the side airbags will inflate forcefully into the space between you and the door.

If the airbag system in this vehicle needs to be modified to accommodate a disabled person, contact the Customer Center. Phone numbers are provided under "If You Need Assistance".

WARNING!

- **Relying on the airbags alone could lead to more severe injuries in a collision. The airbags work with your seat belt to restrain you properly. In some collisions, the airbags won't deploy at all. Always wear your seat belts even though you have airbags.**

(Continued)

WARNING! (Continued)

- **Being too close to the steering wheel or instrument panel during Advanced Front Airbag deployment could cause serious injury, including death. Airbags need room to inflate. Sit back, comfortably extending your arms to reach the steering wheel or instrument panel.**
- **Supplemental Side Airbag Inflatable Curtains (SABIC) also need room to inflate. Do not lean against the door or window. Sit upright in the center of the seat.**

Airbag Deployment Sensors And Controls

Occupant Restraint Controller (ORC)

The **ORC** is part of a Federally regulated safety system required for this vehicle.

The ORC determines if deployment of the front and/or side airbags in a frontal or side collision is required.

Based on the impact sensor's signals, a central electronic ORC deploys the Advanced Front Airbags, SABIC airbags — if equipped, and front seat belt pretensioners — if equipped, as required, depending on the severity and type of impact.

Advanced Front Airbags are designed to provide additional protection by supplementing the seat belts in certain frontal collisions depending on the severity and type of collision. Advanced Front Airbags are not expected to reduce the risk of injury in rear, rollover, or side collisions.

The Advanced Front Airbags will not deploy in all frontal collisions, including some that may produce substantial vehicle damage — for example, some pole collisions, truck underrides, and angle offset collisions. On the other hand, depending on the type and location of impact, Advanced Front Airbags may deploy in crashes with little vehicle front-end damage but that produce a severe initial deceleration.

The side airbags will not deploy in all side collisions. Side airbag deployment will depend on the severity and type of collision.

Because airbag sensors measure vehicle deceleration over time, vehicle speed and damage by themselves are not good indicators of whether or not an airbag should have deployed.

Seat belts are necessary for your protection in all accidents, and also are needed to help keep you in position, away from an inflating airbag.

The ORC monitors the readiness of the electronic parts of the airbag system whenever the ignition switch is in the START or ON/RUN position. If the key is in the LOCK

position, in the ACC position, or not in the ignition, the airbag system is not on and the airbags will not inflate.

The ORC contains a backup power supply system that may deploy the airbags even if the battery loses power or it becomes disconnected prior to deployment.

Also, the ORC turns on the Airbag Warning Light in the instrument panel for approximately four to eight seconds for a self-check when the ignition is first turned on. After the self-check, the Airbag Warning Light will turn off. If the ORC detects a malfunction in any part of the system, it turns on the Airbag Warning Light, either momentarily or continuously. A single chime will sound if the light comes on again after initial startup.

It also includes diagnostics that will illuminate the instrument cluster Airbag Warning Light if a malfunction is noted that could affect the airbag system. The diagnostics also record the nature of the malfunction.

WARNING!

Ignoring the Airbag Warning Light in your instrument panel could mean you won't have the airbags to protect you in a collision. If the light does not come on as a bulb check when the ignition is first turned on, stays on after you start the vehicle, or if it comes on as you drive, have an authorized dealer service the airbag system immediately.

Driver And Passenger Advanced Front Airbag Inflator Units

The Driver and Passenger Advanced Front Airbag Inflator Units are located in the center of the steering wheel and on the right side of the instrument panel. When the ORC detects a collision requiring the Advanced Front Airbags, it signals the inflator units. A large quantity of non-toxic gas is generated to inflate the Advanced Front Airbags. Different airbag inflation rates are possible,

based on the collision type and severity. The steering wheel hub trim cover and the upper right side of the instrument panel separate and fold out of the way as the airbags inflate to their full size. The airbags fully inflate in about 50 to 70 milliseconds. This is about half of the time it takes to blink your eyes. The airbags then quickly deflate while helping to restrain the driver and front passenger.

The Advanced Front Airbag gas is vented through the vent holes in the sides of the airbag. In this way, the airbags do not interfere with your control of the vehicle.

Supplemental Side Airbag Inflatable Curtain (SABIC) Inflator Units — If Equipped

During collisions where the impact is confined to a particular area of the side of the vehicle, the ORC may deploy the SABIC airbags, depending on the severity and type of collision. In these events, the ORC will deploy the SABIC only on the impact side of the vehicle.

A quantity of non-toxic gas is generated to inflate the side curtain airbag. The inflating side curtain airbag pushes the outside edge of the headliner out of the way and covers the window. The airbag inflates in about 30 milliseconds (about one-quarter of the time that it takes to blink your eyes) with enough force to injure you if you are not belted and seated properly, or if items are positioned in the area where the side curtain airbag inflates. This especially applies to children. The side curtain airbag is only about 3-1/2 in (9 cm) thick when it is inflated.

Because airbag sensors estimate deceleration over time, vehicle speed and damage are not good indicators of whether or not an airbag should have deployed.

Front And Side Impact Sensors — If Equipped

In front and side impacts, impact sensors can aid the ORC in determining appropriate response to impact events.

Enhanced Accident Response System

In the event of an impact causing airbag deployment, if the communication network remains intact, and the power remains intact, depending on the nature of the event the ORC will determine whether to have the Enhanced Accident Response System perform the following functions:

- Cut off fuel to the engine.
- Flash hazard lights as long as the battery has power or until the ignition key is turned off.
- Turn on the interior lights, which remain on as long as the battery has power or until the ignition key is removed.
- Unlock the doors automatically.

If A Deployment Occurs

The Advanced Front Airbags are designed to deflate immediately after deployment.

NOTE: Front and/or side airbags will not deploy in all collisions. This does not mean something is wrong with the airbag system.

If you do have a collision which deploys the airbags, any or all of the following may occur:

- The nylon airbag material may sometimes cause abrasions and/or skin reddening to the driver and front passenger as the airbags deploy and unfold. The abrasions are similar to friction rope burns or those you might get sliding along a carpet or gymnasium floor. They are not caused by contact with chemicals. They are not permanent and normally heal quickly. However, if you haven't healed significantly within a few days, or if you have any blistering, see your doctor immediately.
- As the airbags deflate, you may see some smoke-like particles. The particles are a normal by-product of the process that generates the non-toxic gas used for

airbag inflation. These airborne particles may irritate the skin, eyes, nose, or throat. If you have skin or eye irritation, rinse the area with cool water. For nose or throat irritation, move to fresh air. If the irritation continues, see your doctor. If these particles settle on your clothing, follow the garment manufacturer's instructions for cleaning.

Do not drive your vehicle after the airbags have deployed. If you are involved in another collision, the airbags will not be in place to protect you.

WARNING!

Deployed airbags and seat belt pretensioners cannot protect you in another collision. Have the airbags, seat belt pretensioners, and the front seat belt retractor assemblies replaced by an authorized dealer immediately. Also, have the Occupant Restraint Controller (ORC) system serviced as well.

Maintaining Your Airbag System

WARNING!

- **Modifications to any part of the airbag system could cause it to fail when you need it. You could be injured if the airbag system is not there to protect you. Do not modify the components or wiring, including adding any kind of badges or stickers to the steering wheel hub trim cover or the upper right side of the instrument panel. Do not modify the front bumper, vehicle body structure, or add aftermarket side steps or running boards.**
- **It is dangerous to try to repair any part of the airbag system yourself. Be sure to tell anyone who works on your vehicle that it has an airbag system.**

(Continued)

WARNING! (Continued)

- **Do not attempt to modify any part of your airbag system. The airbag may inflate accidentally or may not function properly if modifications are made. Take your vehicle to an authorized dealer for any airbag system service. If your seat, including your trim cover and cushion, needs to be serviced in any way (including removal or loosening/tightening of seat attachment bolts), take the vehicle to your authorized dealer. Only manufacturer approved seat accessories may be used. If it is necessary to modify the airbag system for persons with disabilities, contact your authorized dealer.**

Airbag Warning Light

You will want to have the airbags ready to inflate for your protection in a collision. The Airbag Warning Light monitors the internal circuits and interconnecting wiring associated with airbag system electrical components. While the airbag system is designed to be maintenance free. If any of the following occurs, have an authorized dealer service the airbag system immediately.

- The Airbag Warning Light does not come on during the four to eight seconds when the ignition switch is first turned to the ON/RUN position.
- The Airbag Warning Light remains on after the four to eight-second interval.
- The Airbag Warning Light comes on intermittently or remains on while driving.

NOTE: If the speedometer, tachometer, or any engine related gauges are not working, the Occupant Restraint Controller (ORC) may also be disabled. The airbags may not be ready to inflate for your protection. Promptly check the fuse block for blown fuses. Refer to the label

located on the inside of the fuse block cover for the proper airbag fuses. See your authorized dealer if the fuse is good.

Event Data Recorder (EDR)

This vehicle is equipped with an event data recorder (EDR). The main purpose of an EDR is to record, in certain crash or near crash-like situations, such as an air bag deployment or hitting a road obstacle, data that will assist in understanding how a vehicle's systems performed. The EDR is designed to record data related to vehicle dynamics and safety systems for a short period of time, typically 30 seconds or less. The EDR in this vehicle is designed to record such data as:

- How various systems in your vehicle were operating;
- Whether or not the driver and passenger safety belts were buckled/fastened;
- How far (if at all) the driver was depressing the accelerator and/or brake pedal; and,
- How fast the vehicle was traveling.

These data can help provide a better understanding of the circumstances in which crashes and injuries occur.

NOTE: EDR data are recorded by your vehicle only if a non-trivial crash situation occurs; no data are recorded by the EDR under normal driving conditions and no personal data (e.g., name, gender, age, and crash location) are recorded. However, other parties, such as law enforcement, could combine the EDR data with the type of personally identifying data routinely acquired during a crash investigation.

To read data recorded by an EDR, special equipment is required, and access to the vehicle or the EDR is needed. In addition to the vehicle manufacturer, other parties,

such as law enforcement, that have the special equipment, can read the information if they have access to the vehicle or the EDR.

Child Restraints

Everyone in your vehicle needs to be buckled up all the time, including babies and children. Every state in the United States and all Canadian provinces require that small children ride in proper restraint systems. This is the law, and you can be prosecuted for ignoring it.

Children 12 years or under should ride properly buckled up in a rear seat, if available. According to crash statistics, children are safer when properly restrained in the rear seats rather than in the front.

WARNING!

In a collision, an unrestrained child, even a tiny baby, can become a projectile inside the vehicle. The force required to hold even an infant on your lap can become so great that you could not hold the child, no matter how strong you are. The child and others could be badly injured. Any child riding in your vehicle should be in a proper restraint for the child's size.

There are different sizes and types of restraints for children from newborn size to the child almost large enough for an adult safety belt. Always check the child seat Owner's Manual to ensure you have the right seat for your child. Use the restraint that is correct for your child.

Infants And Small Children

- Safety experts recommend that children ride rearward-facing in the vehicle until they are at least one year old and weigh at least 20 lbs (9 kg). Two types of child restraints can be used rearward-facing: infant carriers and "convertible" child seats. Both types of child restraints are held in the vehicle by the lap/shoulder belt.
- The infant carrier is only used rearward-facing in the vehicle. It is recommended for children who weigh up to about 20 lbs (9 kg). "Convertible" child seats can be used either rearward-facing or forward-facing in the vehicle. Convertible child seats often have a higher weight limit in the rearward-facing direction than infant carriers do, so they can be used rearward-facing by children who weigh more than 20 lbs (9 kg) but are less than one year old. Both types of child restraints are held in the vehicle by the lap/shoulder belt or the LATCH child restraint anchorage system. Refer to "Lower Anchors and Tether for CHildren (LATCH)".

WARNING!

Rearward-facing child seats must never be used in the front seat of a vehicle with a front passenger airbag. An airbag deployment could cause severe injury or death to infants in this position.

Older Children And Child Restraints

- Children who weigh more than 20 lbs (9 kg) and who are older than one year can ride forward-facing in the vehicle. Forward-facing child seats and convertible child seats used in the forward-facing direction are for children who weigh 20 to 40 lbs (9 to 18 kg) and who are older than one year. These child seats are also held in the vehicle by the lap/shoulder belt or the LATCH child restraint anchorage system. Refer to "Lower Anchors and Tether for CHildren (LATCH)".

- The belt-positioning booster seat is for children weighing more than 40 lbs (18 kg), but who are still too small to fit the vehicle's seat belts properly. If the child cannot sit with knees bent over the vehicle's seat cushion while the child's back is against the seat back, they should use a belt-positioning booster seat. The child and booster seat are held in the vehicle by the lap/shoulder belt.

NOTE: For additional information, refer to www.seatcheck.org or call 1–866–SEATCHECK. Canadian residents should refer to Transport Canada's website for additional information: http://www.tc.gc.ca/roadsafety/safedrivers/childsafety/index.htm

WARNING!

- **Improper installation can lead to failure of an infant or child restraint. It could come loose in a collision. The child could be badly injured or killed. Follow the manufacturer's directions exactly when installing an infant or child restraint.**
- **A rearward-facing child restraint should only be used in a rear seat.**
- **A rearward-facing infant restraint in the front seat may be struck by a deploying a passenger airbag which may cause severe or fatal injury to the infant.**

Children Too Large For Booster Seats

Children who are large enough to wear the shoulder belt comfortably and whose legs are long enough to bend over the front of the seat when their back is against the seatback should use the lap/shoulder belt in a rear seat.

- Make sure that the child is upright in the seat.
- The lap portion should be low on the hips and as snug as possible.
- Check belt fit periodically. A child's squirming or slouching can move the belt out of position.
- If the shoulder belt contacts the face or neck, move the child closer to the center of the vehicle. Never allow a child to put the shoulder belt under an arm or behind their back.

Here are some tips for getting the most out of your child restraint:

- Before buying any restraint system, make sure that it has a label certifying that it meets all applicable Safety Standards. Chrysler Group LLC also recommends that you make sure that you can install the child restraint in the vehicle where you will use it before you buy it.
- The restraint must be appropriate for your child's weight and height. Check the label on the restraint for weight and height limits.
- Carefully follow the instructions that come with the restraint. If you install the restraint improperly, it may not work when you need it.
- In the rear seat, you may have trouble tightening the lap/shoulder belt on the child restraint because the buckle or latch plate is too close to the belt path opening on the restraint. Disconnect the latch plate

from the buckle and twist the short buckle-end belt several times to shorten it. Insert the latch plate into the buckle with the release button facing out.

- If the belt still can't be tightened, or if pulling and pushing on the restraint loosens the belt, disconnect the latch plate from the buckle, turn the latch plate around, and insert the latch plate into the buckle again. If you still can't make the child restraint secure, try a different seating position.
- Buckle the child into the seat according to the child restraint manufacturer's directions.

WARNING!

- **Improper installation can lead to failure of an infant or child restraint. It could come loose in a collision. The child could be badly injured or killed. Follow the manufacturer's directions exactly when installing an infant or child restraint.**
- **When your child restraint is not in use, secure it in the vehicle with the seat belt or remove it from the vehicle. Do not leave it loose in the vehicle. In a sudden stop or accident, it could strike the occupants or seatbacks and cause serious personal injury.**

Lower Anchors and Tether for CHildren (LATCH)

Each vehicle is equipped with the child restraint anchorage system called LATCH, which stands for Lower Anchors and Tether for CHildren. The LATCH system provides for the installation of the child restraint without using the vehicle seat belt, instead securing the child restraint using lower anchorages and upper tether straps from the child restraint to the vehicle structure. LATCH child restraint anchorage systems are installed in the Quad Cab®, Mega Cab® and Crew Cab rear seat outboard positions. LATCH equipped seating positions feature both lower anchor bars, located at the back of the seat cushion, and tether strap anchorages, located behind the seat back (refer to "Child Restraint Tether Anchor").

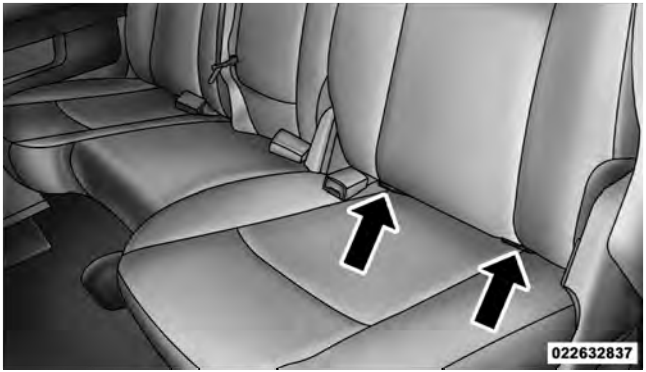

Quad Cab®/Mega Cab®/Crew Cab Rear Outboard Seats Driver Side

Child restraint systems having attachments designed to connect to the lower anchorages are now available. Child restraints having tether straps and hooks for connection to the seat back tether anchorage have been available for

some time. In fact, many child restraint manufacturers will provide add-on tether strap kits for some of their older products.

Because the lower anchorages are to be introduced to passenger carrying vehicles over a period of years, child restraint systems having attachments for those anchorages will continue to have features for installation in vehicles using the lap or lap/shoulder belt. They will also have tether straps, and you are urged to take advantage of all of the available attachments provided with your child restraint in any vehicle.

NOTE:

- When using the LATCH attaching system to install a child restraint, please ensure that all seat belts not being used for occupant restraints are stowed and out of reach of children. It is recommended that before installing the child restraint, buckle the seat belt so the seat belt is tucked behind the child restraint and out of reach. If the buckled seat belt interferes with the child restraint installation, instead of tucking the seat belt behind the child restraint, route the seat belt through the child restraint belt path and then buckle it. This should stow the seat belt out of the reach of an inquisitive child. Remind all children in the vehicle that the seat belts are not toys and should not be played with, and never leave your child unattended in the vehicle.
- If your child restraint seat is not LATCH-compatible, install the restraint using the vehicle seat belting.

Installing The Child Restraint System

WARNING!

Do not install child restraint systems equipped with LATCH mechanisms in the center position of a Quad Cab® rear seat, or Crew Cab model with a bench rear seat. A child may be placed in the rear center seating position of a Quad Cab®, or Crew Cab bench model using the seat belt and child tether anchorage. The LATCH anchorages in the rear seat are designed for the two outboard seating positions for Quad Cab®, Crew Cab® with a full bench rear seat, and all three positions for Mega Cab® and Crew Cab® with a split bench rear seat. Failure to follow this may result in serious or fatal injury.

We urge you to carefully follow the directions of the manufacturer when installing your child restraint. Many, but not all, restraint systems will be equipped with separate straps on each side, with each having a hook or connector, and a means for adjusting the tension in the strap. Forward-facing toddler restraints and some rearward-facing infant restraints will also be equipped with a tether strap, a hook and means for adjusting the tension in the strap.

In general, you will first loosen the child seat adjusters on the lower straps and tether straps so that you can more easily attach the hook or connector to the lower anchorages and tether anchorages. Then tighten all three straps as you push the child restraint rearward and downward into the seat.

Not all child restraint systems will be installed as we have described here. Again, carefully follow the instructions that come with the child restraint system.

WARNING!

Improper installation of a child restraint to the LATCH anchorages can lead to failure of an infant or child restraint. The child could be badly injured or killed. Follow the manufacturer's directions exactly when installing an infant or child restraint.

Installing Child Restraints Using The Vehicle Seat Belt

The seat belts in the passenger seating positions are equipped with either an Automatic Locking Retractor (ALR) or a cinching latch plate or both. Both types of seat belts are designed to keep the lap portion of the seat belt tight around the child restraint so that it is not necessary to use a locking clip. The ALR will make a ratcheting noise if you extract the entire belt from the retractor and then allow the belt to retract into the retractor. For additional information on ALR, refer to "Automatic Locking Mode".

To install a child restraint, first, pull enough of the seat belt webbing from the retractor to route it through the belt path of the child restraint and slide the latch plate into the buckle. Next, extract all the seat belt webbing out of the retractor and then allow the belt to retract into the retractor. Finally, pull on any excess webbing to tighten the lap portion around the child restraint. Any seat belt system will loosen with time, so check the belt occasionally, and pull it tight if necessary.

Child Restraint Tether Anchor

Child restraints having tether straps and hooks for connection to tether anchors have been available for some time. In fact, many child restraint manufacturers will provide add-on tether strap kits for their older products. Regular Cab models have two tether anchorages, one each behind the front center and right seats. Quad Cab®, Mega Cab® and Crew Cab models have three anchorages, one behind each of the rear seats.

WARNING!

An incorrectly anchored tether strap could lead to seat failure and injury to the child. In a collision, the seat could come loose and allow the child to crash into the inside of the vehicle or other passengers, or even be thrown from the vehicle. Use only the anchor positions directly behind the child seat to secure a child restraint top tether strap. Follow the instructions below. See your authorized dealer for help if necessary.

Tether Anchorage Points at the Right and Center Front Seat (Regular Cab - All Seats)

1. Place the child restraint on the seat and adjust the tether strap so that it will reach over the seat back under the head restraint to the tether anchor directly behind the seat.

2. Lift the cover (if so equipped), and attach the hook to the square opening in the sheet metal.

3. Install the child restraint and remove the slack in the tether strap according to the manufacturer's instructions.

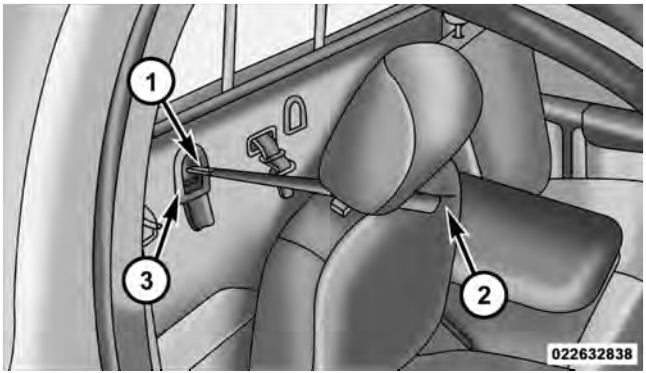

Regular Cab Tether Strap Mounting

1 — Tether Strap Hook
2 — Tether Strap to Child Restraint
3 — Tether Anchor

Multiple Child Restraint Installation Sequence (Quad Cab®/Crew Cab/Mega Cab® - Rear Seats)

Mega Cab®

1. Place a child restraint on each outboard rear seat and adjust the tether strap so that it will reach under the head restraint to the tether anchor directly behind the seat and then to the anchor directly behind the center rear seat.

2. Lift the cover, and attach the hook to the square opening in the sheet metal.

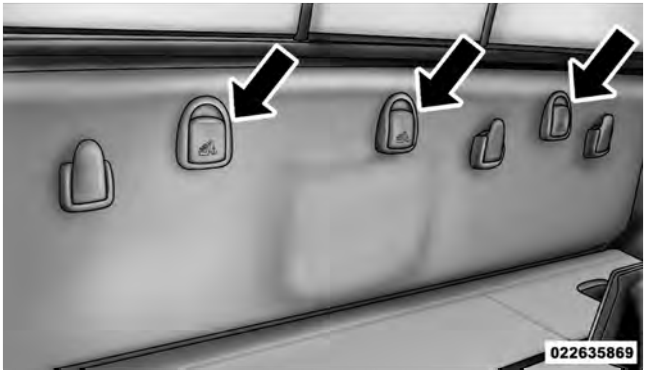

Mega Cab® Tether Strap Mounting

3. Install the child restraint and remove the slack in the tether strap according to the manufacturer's instructions.

Quad Cab®/Crew Cab

1. The tether straps loops are located between the rear glass and the rear seat. There is a tether strap loop located behind each seating position. You can gain access to the center seating position tether strap loop by raising the head restraint and reaching between the rear glass and rear seat.

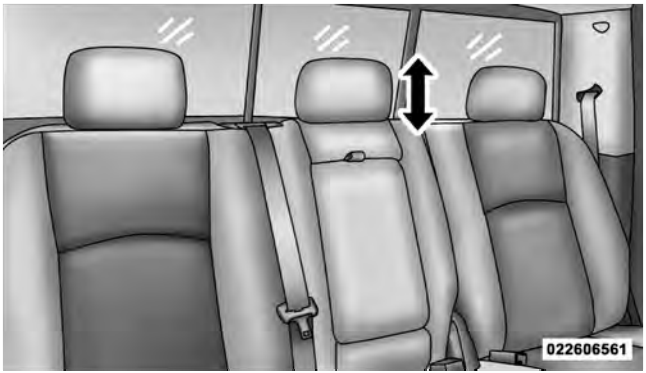

Head Restraint Adjustment

2. Place a child restraint on each outboard rear seat and adjust the tether strap so that it will reach under the head restraint, through the outboard tether strap loop, then route it to the tether strap loop located directly behind the center rear seat.

3. Pass each tether strap hook under the head restraint and through the loop of webbing behind the child seat.

4. Route each tether strap to the anchor behind the center seat, and attach the hooks to the anchor loop.

5. Place a child restraint on the center rear seat and adjust the tether strap so that it will reach under the head restraint through the center seat tether strap loop and anchor to the tether strap loop located behind either outboard seating positions.

6. Install each child restraint and remove the slack in the tether strap according to the child restraint manufacturer's instructions.

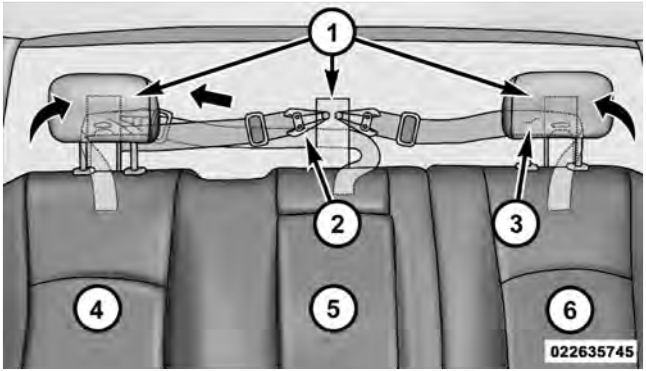

Multiple Child Restraint Quad Cab®/Crew Cab

1 — Anchor Loops
2 — Snap Hook
3 — Tether Strap
4 — Passenger's Side Rear Child Seat
5 — Rear Center Child Seat
6 — Driver's Side Rear Child Seat

Transporting Pets

Airbags deploying in the front seat could harm your pet. An unrestrained pet will be thrown about and possibly injured, or injure a passenger during panic braking or in an accident. Pets should be restrained in the rear seat in pet harnesses or pet carriers that are secured by seat belts.

ENGINE BREAK-IN RECOMMENDATIONS

A long break-in period is not required for the engine and drivetrain (transmission and axle) in your vehicle.

Drive moderately during the first 300 miles (500 km). After the initial 60 miles (100 km), speeds up to 50 or 55 mph (80 or 90 km/h) are desirable.

While cruising, brief full-throttle acceleration within the limits of local traffic laws contributes to a good break-in. Wide-open throttle acceleration in low gear can be detrimental and should be avoided.

The engine oil installed in the engine at the factory is a high-quality energy conserving type lubricant. Oil changes should be consistent with anticipated climate conditions under which vehicle operations will occur. For the recommended viscosity and quality grades, refer to "Maintenance Procedures" in "Maintaining Your Vehicle". NON-DETERGENT OR STRAIGHT MINERAL OILS MUST NEVER BE USED.

A new engine may consume some oil during its first few thousand miles (kilometers) of operation. This should be considered a normal part of the break-in and not interpreted as an indication of difficulty.

SAFETY TIPS

Transporting Passengers

NEVER TRANSPORT PASSENGERS IN THE CARGO AREA.

WARNING!

- **Do not leave children or animals inside parked vehicles in hot weather. Interior heat build-up may cause serious injury or death.**
- **It is extremely dangerous to ride in a cargo area, inside or outside of a vehicle. In a collision, people riding in these areas are more likely to be seriously injured or killed.**
- **Do not allow people to ride in any area of your vehicle that is not equipped with seats and seat belts.**

WARNING! (Continued)

- **Be sure everyone in your vehicle is in a seat and using a seat belt properly.**

Exhaust Gas

WARNING!

Exhaust gases can injure or kill. They contain carbon monoxide (CO), which is colorless and odorless. Breathing it can make you unconscious and can eventually poison you. To avoid breathing (CO), follow these safety tips:

Do not run the engine in a closed garage or in confined areas any longer than needed to move your vehicle in or out of the area.

If it is necessary to sit in a parked vehicle with the engine running, adjust your heating or cooling controls to force outside air into the vehicle. Set the blower at high speed.

If you are required to drive with the trunk/liftgate open, make sure that all windows are closed and the climate control BLOWER switch is set at high speed. DO NOT use the recirculation mode.

The best protection against carbon monoxide entry into the vehicle body is a properly maintained engine exhaust system.

Whenever a change is noticed in the sound of the exhaust system, when exhaust fumes can be detected inside the vehicle, or when the underside or rear of the vehicle is damaged, have a competent mechanic inspect the complete exhaust system and adjacent body areas for broken, damaged, deteriorated, or mispositioned parts. Open seams or loose connections could permit exhaust fumes to seep into the passenger compartment. In addition, inspect the exhaust system each time the vehicle is raised for lubrication or oil change. Replace as required.

Safety Checks You Should Make Inside The Vehicle

Seat Belts

Inspect the belt system periodically, checking for cuts, frays, and loose parts. Damaged parts must be replaced immediately. Do not disassemble or modify the system.

Front seat belt assemblies must be replaced after a collision. Rear seat belt assemblies must be replaced after a collision if they have been damaged (i.e., bent retractor, torn webbing, etc.). If there is any question regarding belt or retractor condition, replace the belt.

Airbag Warning Light

The light should come on and remain on for four to eight seconds as a bulb check when the ignition switch is first turned ON. If the light is not lit during starting, see your

authorized dealer. If the light stays on, flickers, or comes on while driving, have the system checked by an authorized dealer.

Defroster

Check operation by selecting the defrost mode and place the blower control on high speed. You should be able to feel the air directed against the windshield. See your authorized dealer for service if your defroster is inoperable.

Floor Mat Safety Information

Always use floor mats designed to fit the footwell of your vehicle. Use only floor mats that leave the pedal area unobstructed and that are firmly secured so that they cannot slip out of position and interfere with the pedals or impair safe operation of your vehicle in other ways.

WARNING!

Pedals that cannot move freely can cause loss of vehicle control and increase the risk of serious personal injury.

- **Always make sure that floor mats are properly attached to the floor mat fasteners.**
- **Never place or install floor mats or other floor coverings in the vehicle that cannot be properly secured to prevent them from moving and interfering with the pedals or the ability to control the vehicle.**
- **Never put floor mats or other floor coverings on top of already installed floor mats. Additional floor mats and other coverings will reduce the size of the pedal area and interfere with the pedals.**

(Continued)

WARNING! (Continued)

- **Check mounting of mats on a regular basis. Always properly reinstall and secure floor mats that have been removed for cleaning.**
- **Always make sure that objects cannot fall into the driver footwell while the vehicle is moving. Objects can become trapped under the brake pedal and accelerator pedal causing a loss of vehicle control.**
- **If required, mounting posts must be properly installed, if not equipped from the factory.**

Failure to properly follow floor mat installation or mounting can cause interference with the brake pedal and accelerator pedal operation causing loss of control of the vehicle.

Periodic Safety Checks You Should Make Outside The Vehicle

Tires

Examine tires for excessive tread wear and uneven wear patterns. Check for stones, nails, glass, or other objects lodged in the tread or sidewall. Inspect the tread for cuts and cracks. Inspect sidewalls for cuts, cracks and bulges. Check the wheel nuts for tightness. Check the tires (including spare) for proper cold inflation pressure.

Lights

Have someone observe the operation of exterior lights while you work the controls. Check turn signal and high beam indicator lights on the instrument panel.

Door Latches

Check for positive closing, latching, and locking.

Fluid Leaks

Check area under vehicle after overnight parking for fuel, engine coolant, oil, or other fluid leaks. Also, if gasoline fumes are detected or if fuel, power steering fluid, or brake fluid leaks are suspected, the cause should be located and corrected immediately.

UNDERSTANDING THE FEATURES OF YOUR VEHICLE

CONTENTS

■ Mirrors 93
- □ Inside Day/Night Mirror 93
- □ Automatic Dimming Mirror — If Equipped . . . 94
- □ Outside Mirrors 95
- □ Outside Mirrors Folding Feature 95
- □ Power Mirrors — If Equipped 96
- □ Power Folding Outside Mirrors — If Equipped 97
- □ Heated Mirrors — If Equipped 99
- □ Driver's Automatic Dimming Mirror — If Equipped 99
- □ Illuminated Vanity Mirror — If Equipped 99
- □ "Slide-On-Rod" Features Of Sun Visor — If Equipped 99
- □ Trailer Towing Mirrors — If Equipped 100

■ Uconnect™ Phone — If Equipped 101

■ Voice Command — If Equipped 101

■ Seats 101
- □ Power Seats — If Equipped 102

- Power Lumbar — If Equipped 104
- Heated Seats — If Equipped 104
- Ventilated Seats — If Equipped 107
- Manual Seat Adjuster — If Equipped 108
- Manual Reclining Seats — If Equipped 109
- 40-20-40 Front Bench Seat — If Equipped . . . 110
- Mega Cab® Rear Seat Features 110
- Head Restraints 114

■ Driver Memory Seat — If Equipped 116

- Setting Memory Positions And Linking RKE Transmitter To Memory 117
- Memory Position Recall 118
- To Disable A RKE Transmitter Linked To Memory 119
- Self-Limiting Control 119
- Driver Easy Exit And Easy Entry Control . . . 120

■ To Open And Close The Hood 120

■ Lights 121

- Headlights 123
- Automatic Headlights — If Equipped 123
- Headlight Delay 124
- Parking Lights And Panel Lights 124
- Fog Lights — If Equipped 124
- Interior Lights 125
- Cargo Light 126
- Lights-On Reminder 127
- Battery Saver 127

□ Daytime Running Lights (DRL) — If Equipped 127
□ Multifunction Lever 127
■ Windshield Wipers And Washers 129
□ Windshield Wipers 129
□ Windshield Washers 130
□ Mist Feature 131
■ Tilt Steering Column 131
■ Heated Steering Wheel — If Equipped 132
■ Driver Adjustable Pedals — If Equipped 133
■ Electronic Speed Control — If Equipped 134
□ To Activate 135
□ To Set A Desired Speed 136
□ Deactivating Electronic Speed Control 136
□ To Resume Speed 136
□ Varying The Speed Setting 136
□ To Accelerate For Passing 137
■ Parksense® Rear Park Assist — If Equipped . . . 138
□ Parksense® Sensors 138
□ Parksense® Warning Display 138
□ Parksense® Display 139
□ Enabling And Disabling Parksense® 142
□ Service The Parksense® Rear Park Assist System 143
□ Cleaning The Parksense® System 144
□ Parksense® System Usage Precautions 144

■ Parkview® Rear Back Up Camera — If Equipped 147
□ Turning Parkview® On Or Off — With Navigation/Multimedia Radio 149
□ Turning Parkview® On Or Off — Without Navigation/Multimedia Radio 149
■ Overhead Console — If Equipped 150
□ Courtesy/Reading Lights 150
■ Garage Door Opener — If Equipped 152
□ Programming HomeLink® 153
□ Gate Operator/Canadian Programming 156
□ Using HomeLink® 156
□ Reprogramming A Single HomeLink® Button 157
□ Security 157
□ Troubleshooting Tips 157
□ General Information 158
■ Power Sunroof — If Equipped 158
□ Open Sunroof — Express Mode 159
□ Opening Sunroof — Manual Mode 159
□ Closing Sunroof — Express 159
□ Closing Sunroof — Manual Mode 160
□ Pinch Protect Feature 160
□ Pinch Protect Override 160
□ Venting Sunroof — Express 160
□ Sunshade Operation 161
□ Wind Buffeting 161

- □ Sunroof Maintenance 161
- □ Ignition Off Operation 161

■ Electrical Power Outlets 162

■ Cigar Lighter And Ash Receiver — If Equipped 166

■ Power Inverter — If Equipped 167

■ Cupholders 169

- □ Front Instrument Panel Cupholders — (40–20–40 Seats) 169
- □ Front Instrument Panel Cupholders — Floor Mounted Shifter 170
- □ Rear Cupholder — Quad Cab® 170
- □ Rear Cupholder — Crew Cab 171

■ Storage 171

- □ Glove Box Storage 171
- □ Door Storage 173
- □ Center Storage Compartment — If Equipped 174
- □ Second Row In-Floor Storage Bin — If Equipped 176
- □ Seatback Storage 177
- □ Storage (Regular Cab) 178
- □ Storage And Seats (Crew Cab) 178
- □ Plastic Grocery Bag Retainers (Regular Cab Models) 179

■ Rear Window Features 180

- □ Rear Window Defroster 180

□ Power Sliding Rear Window — If Equipped 181
□ Manual Sliding Rear Window — If Equipped 181
■ Fold Flat Load Floor — If Equipped 181
■ Rambox® — If Equipped 184
□ Rambox® Integrated Box Side Storage Bins . . 184
□ Rambox® Safety Warning 187
□ Bed Extender — If Equipped 188
□ Bed Rail Tie-Down System 196
■ Slide-In Campers 198
□ Camper Applications 198
■ Easy-Off Tailgate 198
□ Disconnecting The Rear Camera — If Equipped 198
□ Removing The Tailgate 199
□ Locking Tailgate 200

MIRRORS

Inside Day/Night Mirror

A two-point pivot system allows for horizontal and vertical adjustment of the mirror. Adjust the mirror to center on the view through the rear window. The mirror should be adjusted while set in the day position (toward the windshield).

Headlight glare can be reduced by moving the small control lever under the mirror to the night position (lever flipped toward the rear of vehicle).

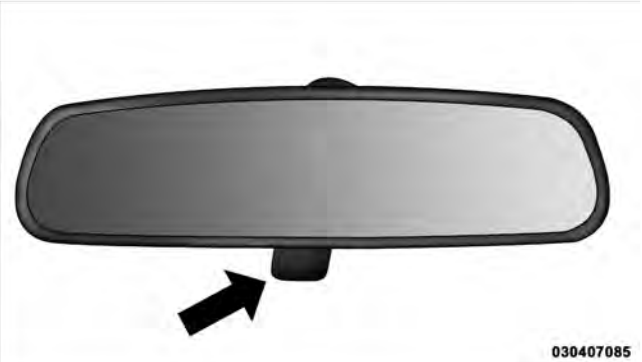

Adjusting Rearview Mirror

The mirror should be adjusted with the lever set in the day position (lever flipped toward the windshield). The mirror should be adjusted to center on the view through the rear window.

Automatic Dimming Mirror — If Equipped

This mirror automatically adjusts for headlight glare from vehicles behind you. You can turn the feature on or off by pressing the button at the base of the mirror. A light to the left of the button will illuminate to indicate when the dimming feature is activated. The sensor to the right of the button does not illuminate.

Automatic Dimming Mirror

CAUTION!

To avoid damage to the mirror during cleaning, never spray any cleaning solution directly onto the mirror. Apply the solution onto a clean cloth and wipe the mirror clean.

Outside Mirrors

To receive maximum benefit, adjust the outside mirror(s) to center on the adjacent lane of traffic with a slight overlap of the view obtained on the inside mirror.

WARNING!

Vehicles and other objects seen in a passenger side convex mirror will look smaller and farther away than they really are. Relying too much on your passenger side convex mirror could cause you to collide with another vehicle or other object. Use your inside mirror when judging the size or distance of a vehicle seen in the passenger side convex mirror. Some vehicles will not have a convex right side mirror.

Outside Mirrors Folding Feature

All exterior mirrors are designed to be able to be manually folded both forward and rearward to prevent damage.

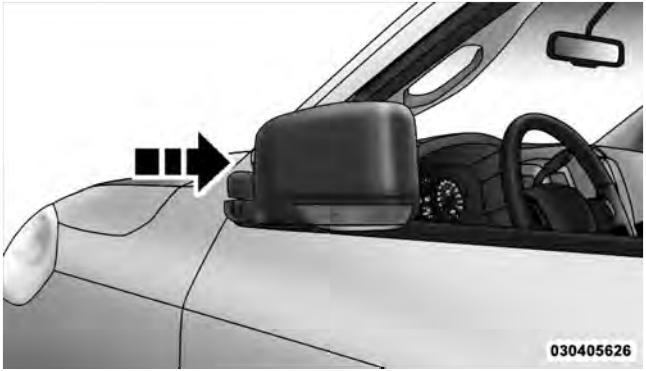

Folding Mirror

CAUTION!

It is recommended to fold the mirrors into the full rearward position to resist damage when entering a car wash or a narrow location.

Power Mirrors — If Equipped

The controls for the power mirrors are located on the driver's door trim panel.

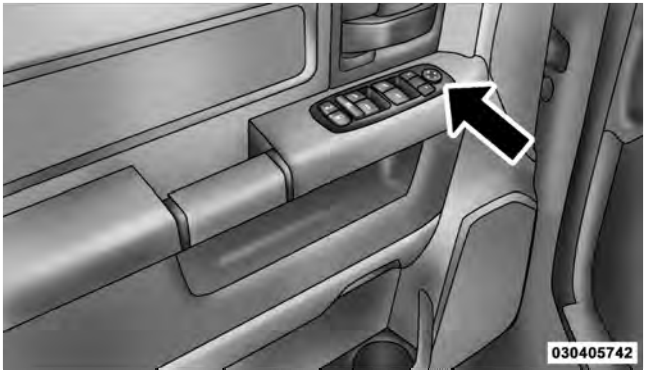

Power Mirror Controls

The power mirror controls consist of mirror select buttons and a four-way mirror control switch.

Power Mirror Controls

1 — Mirror Select Buttons
2 — Mirror Control

To adjust a mirror, press the mirror select button for the mirror that you want to adjust. Using the mirror control switch, press on any of the four arrows for the direction that you want the mirror to move.

Power Mirror Movement

Power Folding Outside Mirrors — If Equipped

If equipped with power folding mirrors, they can be electrically folded rearward and unfolded into the drive position. The power folding mirrors are designed to operate if the vehicle is stationary or traveling at speed of less than 35 mph (56 km/h). At speeds greater than

35 mph (56 km/h), the fold feature will be disabled, however the mirrors will attempt to unfold at any speed. If you attempt to unfold the mirrors at high speeds, they may not fully unfold - slow down and try again.

The switch for the power folding mirrors is located between the power mirror switches L (left) and R (right). Press the switch once and the mirrors will fold in, pressing the switch a second time will return the mirrors to the normal driving position.

Power Folding Mirror Switch

NOTE: Ten or more switch activations within one minute will disable the fold/unfold feature to protect the motors from overheating.

Heated Mirrors — If Equipped

These mirrors are heated to melt frost or ice. This feature is activated whenever you turn on the rear window defroster. Refer to "Rear Window Features" in "Understanding the Features of Your Vehicle" for further information.

Driver's Automatic Dimming Mirror — If Equipped

The driver's outside mirror will automatically adjust for glare from vehicles behind you. This feature is controlled by the inside automatic dimming mirror and can be turned on or off by pressing the button at the base of the inside mirror. The mirror will automatically adjust for headlight glare when the inside mirror adjusts.

Illuminated Vanity Mirror — If Equipped

Illuminated vanity mirrors are located on each sun visor. To use the mirror, rotate the sun visor down and swing the mirror cover upward. The lights will turn on automatically. Closing the mirror cover turns off the light.

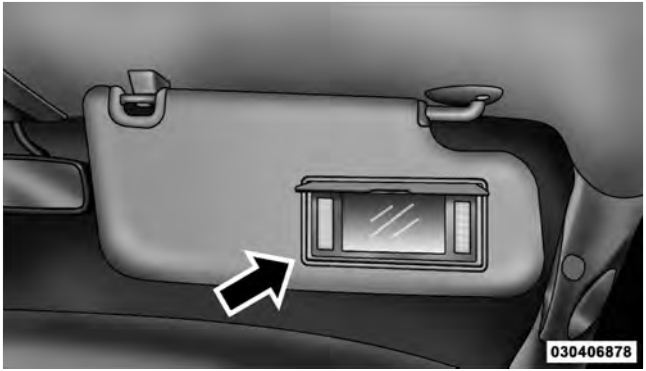

Illuminated Vanity Mirror

"Slide-On-Rod" Features Of Sun Visor — If Equipped

The sun visor "Slide-On-Rod" feature allows for additional flexibility in positioning the visor to block out the sun.

To use the "Slide-On-Rod" feature, rotate the sun visor downward and unclip it. Pull the sun visor along the "Slide-On-Rod" until the sun visor is in the desired position.

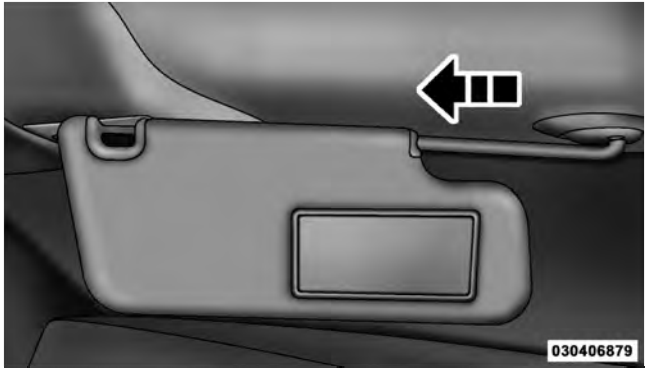

Slide-On-Rod Extender

Trailer Towing Mirrors — If Equipped

These mirrors are designed with an adjustable mirror head to provide a greater vision range when towing extra-wide loads. To change position inboard or outboard, the mirror head should be rotated (flipped in or out).

Trailer Towing Position

NOTE: Fold the trailer towing mirrors rearward prior to entering an automated car wash.

A small blindspot mirror is located next to main mirror and can be adjusted separately.

Blindspot Mirror

Uconnect™ Phone — IF EQUIPPED

Uconnect™ Phone is a hands-free system that allows you to use voice commands to dial a phone number stored in your mobile phone. Press the Uconnect™ Phone button on the radio or steering wheel controls (if equipped) and follow the instructions to pair the mobile phone.

Refer to "Uconnect™ Phone" in the Uconnect™ User Manual located on the DVD for further details.

VOICE COMMAND — IF EQUIPPED

Voice Commands can be initiated by pressing the VR button VR located on the radio or steering wheel controls (if equipped).

Refer to "Voice Command" in the Uconnect™ User Manual located on the DVD for further details.

SEATS

Seats are a part of the Occupant Restraint System of the vehicle.

WARNING!

- **It is dangerous to ride in a cargo area, inside or outside of a vehicle. In a collision, people riding in these areas are more likely to be seriously injured or killed.**
- **Do not allow people to ride in any area of your vehicle that is not equipped with seats and seat belts.**
- **Be sure everyone in your vehicle is in a seat and using a seat belt properly.**

Power Seats — If Equipped

Some models may be equipped with driver and passenger eight-way power seats. The power seat switches are located on the outboard side of the front seat cushions. There are two power seat switches that are used to control the movement of the seat cushion and the seatback.

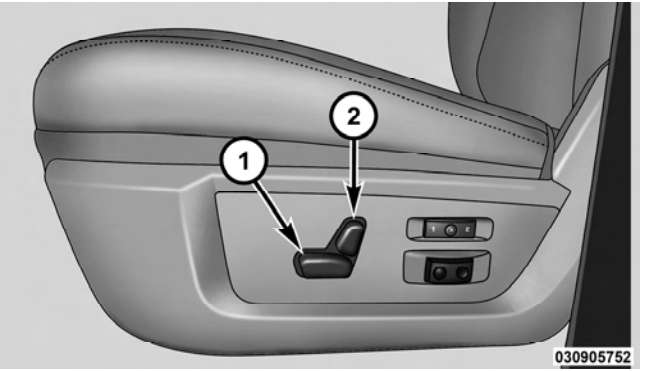

Power Seat Switches

1 — Power Seat Switch
2 — Power Seatback Switch

Adjusting The Sear Forward Or Rearward

The seat can be adjusted both forward and rearward. Push the seat switch forward or rearward, the seat will

move in the direction of the switch. Release the switch when you have reached the desired position.

Adjusting The Seat Up Or Down

The height of the seats can be adjusted up or down. Pull upward or push downward on the seat switch, the seat will move in the direction of the switch. Release the switch when you have reached the desired position.

Tilting The Seat Up Or Down

The angle of the seat cushion can be adjusted in four directions. Pull upward or push downward on the front or rear of the seat switch, the front or rear of the seat cushion will move in the direction of the switch. Release the switch when you have reached the desired position.

Reclining The Seatback

The angle of the seatback can be adjusted forward or rearward. Push the seatback switch forward or rearward, the seat will move in the direction of the switch. Release the switch when you have reached the desired position.

WARNING!

- **Adjusting a seat while driving may be dangerous. Moving a seat while driving could result in loss of control which could cause a collision and serious injury or death.**
- **Seats should be adjusted before fastening the seatbelts and while the vehicle is parked. Serious injury or death could result from a poorly adjusted seatbelt.**
- **Do not ride with the seatback reclined so that the shoulder belt is no longer resting against your chest. In a collision you could slide under the seat belt, which could result in serious injury or death.**

CAUTION!

Do not place any article under a power seat or impede its ability to move as it may cause damage to the seat controls. Seat travel may become limited if movement is stopped by an obstruction in the seat's path.

Power Lumbar — If Equipped

Vehicles equipped with power driver or passenger seats may be also be equipped with power lumbar. The power lumbar switch is located on the outboard side of the power seat. Push the switch forward to increase the lumbar support. Push the switch rearward to decrease the lumbar support.

Lumbar Control Switch

Heated Seats — If Equipped

On some models, the front and rear seats may be equipped with heaters in both the seat cushions and seatbacks.

WARNING!

- **Persons who are unable to feel pain to the skin because of advanced age, chronic illness, diabetes, spinal cord injury, medication, alcohol use, exhaustion or other physical condition must exercise care when using the seat heater. It may cause burns even at low temperatures, especially if used for long periods of time.**
- **Do not place anything on the seat that insulates against heat, such as a blanket or cushion. This may cause the seat heater to overheat. Sitting in a seat that has been overheated could cause serious burns due to the increased surface temperature of the seat.**

CAUTION!

Repeated overheating of the seat could damage the heating element and/or degrade the material of the seat.

Front Heated Seats

There are two heated seat switches that allow the driver and passenger to operate the seats independently. The controls for each seat are located near the bottom center of the instrument panel (below the climate controls).

You can choose from HIGH, LOW or OFF heat settings. Amber indicator lights in each switch indicate the level of heat in use. Two indicator lights will illuminate for HIGH, one for LOW and none for OFF.

030905580

Press the switch once to select HIGH-level heating. Press the switch a second time to select LOW-level heating. Press the switch a third time to shut the heating elements OFF.

NOTE:

- Once a heat setting is selected, heat will be felt within two to five minutes.
- The engine must be running for the heated seats to operate.

The heated seats switch from HIGH to LOW and from LOW to OFF automatically, based on time and temperature of the seat. The heated seats can operate on HIGH heat for a maximum of 60 minutes before switching to LOW heat. Once a seat has switched to the LOW heat setting it may operate for a maximum of 45 minutes before automatically shutting OFF. The heated seats can shut OFF early or may not turn on when the seat is already warm.

Vehicle Equipped With Remote Start

On models that are equipped with remote start, the driver's heated seat can be programmed to come on during a remote start. Refer to "Remote Starting System — If Equipped" in "Things to Know Before Starting Your Vehicle" for further information.

Rear Heated Seats

On some models, the two outboard seats are equipped with heated seats. The heated seat switches for these seats are located on the rear of the center console.

There are two heated seat switches that allow the rear passengers to operate the seats independently. You can choose from HIGH, LOW or OFF heat settings. Amber

indicator lights in each switch indicate the level of heat in use. Two indicator lights will illuminate for HIGH, one for LOW and none for OFF.

Press the switch once to select HIGH-level heating. Press the switch a second time to select LOW-level heating. Press the switch a third time to shut the heating elements OFF.

NOTE:

- Once a heat setting is selected, heat will be felt within two to five minutes.
- The engine must be running for the heated seats to operate.

When the HIGH-level setting is selected, the heater will provide a boosted heat level during the first four minutes of operation. Then, the heat output will drop to the normal HIGH-level. If the HIGH-level setting is selected, the system will automatically switch to LOW-level after a maximum of 60 minutes of continuous operation. At that time, the number of illuminated LEDs changes from two to one, indicating the change. The LOW-level setting will turn OFF automatically after a maximum of 45 minutes.

Ventilated Seats — If Equipped

On some models, both the driver and passenger seats are ventilated. Located in the seat cushion and seatback are small fans that draw the air from the passenger compartment and blow air through fine perforations in the seat cover to help keep the driver and front passenger cooler in higher ambient temperatures.

The ventilated seat switches are located in the switch bank in the center stack of the instrument panel, just below the climate controls. The fans operate at two speeds, HIGH and LOW.

Press the switch once to choose HIGH, press it a second time to choose LOW. Pressing the switch a third time will turn the ventilated seat OFF. When HIGH speed is selected both lights on the switch will be illuminated. When LOW speed is selected one light will be illuminated.

NOTE: The engine must be running for the ventilated seats to operate.

Vehicles Equipped With Remote Start

On models equipped with remote start, the drivers ventilated seat can be programmed to come on during a remote start. Refer to "Remote Starting System — If Equipped" in "Things to Know Before Starting Your Vehicle" for further information.

Manual Seat Adjuster — If Equipped

Both front seats are adjustable forward or rearward. The manual seat adjustment handle is located under the seat cushion at the front edge of each seat.

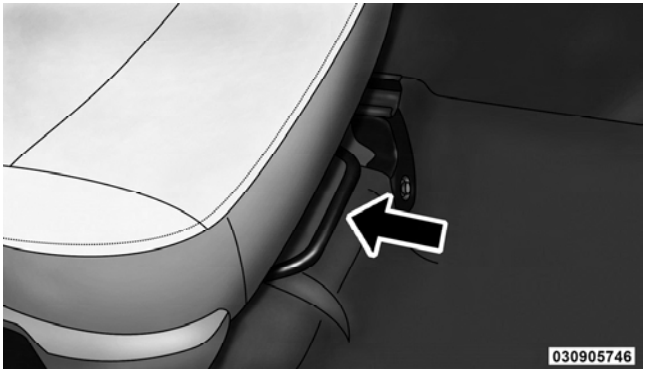

Manual Seat Adjuster

While sitting in the seat, pull up on the handle and slide the seat forward or backward. Release the bar once you

have reached the desired position. Then, using body pressure, move forward and rearward on the seat to be sure that the seat adjusters have latched.

WARNING!

- **Adjusting a seat while driving may be dangerous. Moving a seat while driving could result in loss of control which could cause a collision and serious injury or death.**
- **Seats should be adjusted before fastening the seatbelts and while the vehicle is parked. Serious injury or death could result from a poorly adjusted seatbelt.**

Manual Reclining Seats — If Equipped

The recliner handle is used to adjust the seatback position and is located on the outside of the seat cushion.

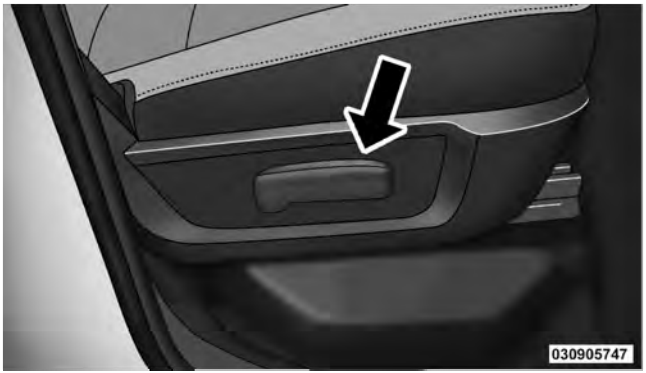

Recline Handle

To adjust the seatback, lift upward on the handle, lean back on the seatback and when you reach the desired position, release the handle. To return the seatback, lift upward on the handle, lean forward and release the handle at the desired position.

WARNING!

Do not ride with the seatback reclined so that the shoulder belt is no longer resting against your chest. In a collision you could slide under the seat belt, which could result in serious injury or death.

Dump Feature — Manual Recline Seat Only

Actuating the recliner handle will allow the seatback to swing (dump) forward on manual recliner seats. This "dump" feature allows access to the storage bin behind the seat.

WARNING!

- **Do not stand or lean in front of the seat while actuating the handle. The seatback may swing forward and hit you causing injury.**

(Continued)

WARNING! (Continued)

- **To avoid injury, place your hand on the seatback and actuate the handle, then position the seatback in the desired position.**

40-20-40 Front Bench Seat — If Equipped

The seat is divided into three segments. The outboard seat portions are each 40% of the total width of the seat. On some models the back of the center portion (20%) easily folds down to provide an armrest/center storage compartment.

Mega Cab® Rear Seat Features

Reclining Rear Seats — If Equipped

The recliner handle is located on the outside of the seat cushion. To adjust the seatback, lift upward on the handle, lean back on the seatback and when you reach the desired position, release the handle.

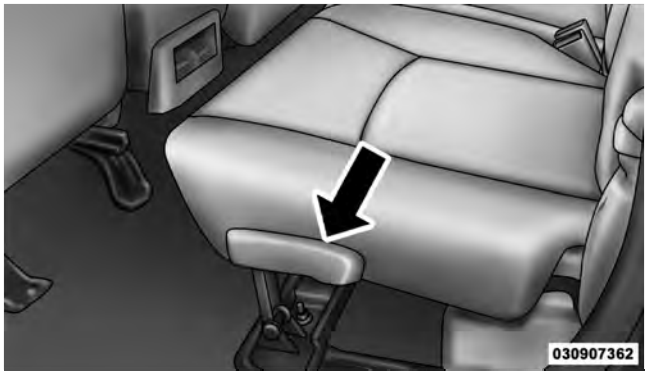

Rear Seat Recliner Handle

WARNING!

Do not ride with the seatback reclined so that the shoulder belt is no longer resting against your chest. In a collision you could slide under the seat belt, which could result in serious injury or death.

Folding Rear Seat (Table Mode) — If Equipped

Both the left and right rear seatbacks can be folded down and used as a table.

To fold down either rear seatback:

1. Lift the handle, located next to the head restraint.

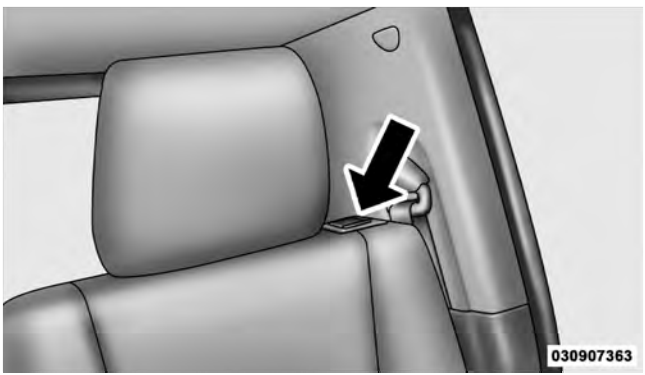

Table Mode Handle

2. Fold the seatback forward.

Table Mode

3. Lift the seatback, to return the seat to the upright position. Be sure the seatback is locked in place.

Folding Rear Seat — If Equipped

Both the outboard rear seats will drop and move forward when the seatback is folded flat.

WARNING!

- **It is dangerous to ride in a cargo area, inside or outside of a vehicle. In a collision, people riding in these areas are more likely to be seriously injured or killed.**
- **Do not allow people to ride in any area of your vehicle that is not equipped with seats and seat belts.**
- **Be sure everyone in your vehicle is in a seat and using a seat belt properly.**
- **Cargo must be securely tied down before driving your vehicle. Improperly secured cargo can fly around in a sudden stop or collision and strike someone in the vehicle, causing serious injury or death.**

To fold either rear seat flat:

1. Lift the handle, located on the outboard side of either of the rear seats.

Handle

2. Fold the seatback down and push the seat forward.

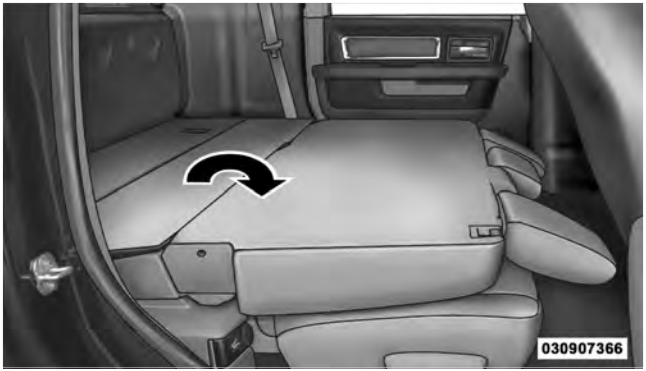

Rear Passenger Fold Flat Seats

3. Lift the seatback, to return the seat to the upright position. Be sure the seat is locked in place.

WARNING!

An improperly latched seat could cause serious injury or death. Make sure that the seatback is securely locked into position. If the seatback in not securely locked into position the seat will not provide the proper stability for child seats and/or passengers.

Head Restraints

Head restraints are designed to reduce the risk of injury by restricting head movement in the event of a rear impact. Head restraints should be adjusted so that the top of the head restraint is located above the top of your ear.

WARNING!

The head restraints for all occupants must be properly adjusted prior to operating the vehicle or occupying a seat. Head restraints should never be adjusted while the vehicle is in motion. Driving a vehicle with the head restraints improperly adjusted or removed could cause serious injury or death in the event of a collision.

Front Head Restraints

To raise the head restraint, pull upward on the head restraint. To lower the head restraint, press the adjustment button, located on the base of the head restraint, and push downward on the head restraint.

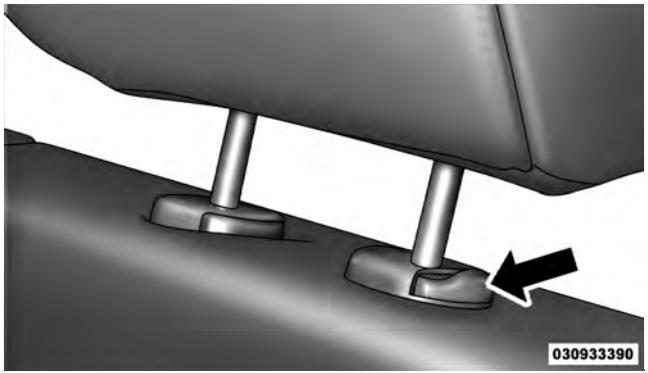

Adjustment Button

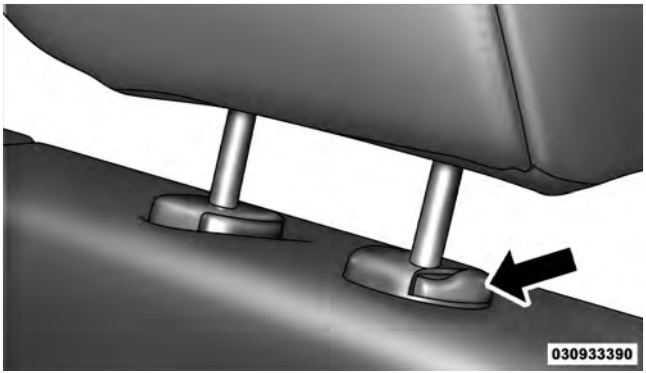

Adjustment Button

Rear Head Restraints

The two outboard seat are equipped with adjustable head restraints. To raise the head restraint, pull upward on the head restraint. To lower the head restraint, press the adjustment button, located on the base of the head restraint, and push downward on the head restraint.

NOTE:

- The rear center head restraint (Crew Cab and Quad Cab) has only one adjustment position that is used to aid in the routing of a tether. Refer to “Occupant Restraints” in “Things to Know Before Starting Your Vehicle” for further information.

- The head restraints should only be removed by qualified technicians, for service purposes only. If either of the head restraints require removal, see your authorized dealer.

DRIVER MEMORY SEAT — IF EQUIPPED

Driver memory seats allow the driver to recall settings for the adjustable pedals, mirrors, seats and the radio presets using the key fob.

The memory seat buttons are located on the outboard side of the drivers seat cushion.

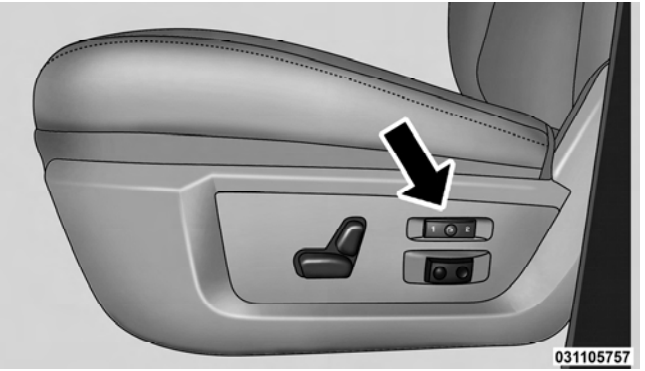

Memory Seat Buttons

The memory buttons 1 and 2 can be programmed to recall the driver's seat position, driver's outside mirror position, adjustable brake, accelerator pedals position, Automatic Temperature Control (ATC) temperature setting and radio station preset settings. Your Remote

Keyless Entry (RKE) transmitters can also be programmed to recall the same positions when the UNLOCK button is pressed.

NOTE: The power lumbar option is not programmable with driver memory seats.

Your vehicle was delivered with two RKE transmitters. One or both RKE transmitters can be linked to either memory position. The memory system can accommodate up to two RKE transmitters, each RKE transmitter linked to either of the two memory positions.

Setting Memory Positions And Linking RKE Transmitter To Memory

NOTE: Each time the S (SET) button and a numbered button (1 or 2) are pressed, you erase the memory settings for that button and store new settings.

1. Turn the vehicle key to the ON/RUN position.

2. Adjust the driver's seat, recliner, and both sideview mirrors to the desired positions.

NOTE: Not all motors may be moved at one time. Refer to "Power Seats — If Equipped" in this section for further information.

3. Adjust the brake and accelerator pedals to the desired positions.

4. Turn on the radio and set the radio station presets (up to 10 AM and 10 FM stations can be set).

5. Adjust the Automatic Temperature Control (ATC) while the ATC is in Auto mode.

6. Press and release the SET button located on the driver's seat.

7. Within five seconds, press and release MEMORY button 1 or 2 on the driver's seat. The next steps must be performed within 10 seconds if you desire to also use a RKE transmitter to recall memory positions.

8. Turn the ignition OFF and remove the key.

9. Press and release the LOCK button on one of the RKE transmitters.

10. Repeat the above steps to set the next memory position using the other numbered memory button or to link another RKE transmitter to memory.

Memory Position Recall

NOTE:

- The vehicle must be in PARK to recall the memory positions.
- Not all motors may be moved at one time. Refer to the "Seats/Eight-Way Power Seat" in this section for further information.

To recall the memory settings for driver one, press MEMORY button number 1 on the driver's seat or the UNLOCK button on the RKE transmitter linked to memory position 1.

To recall the memory setting for driver two, press MEMORY button number 2 on the driver's seat or the UNLOCK button on the RKE transmitter linked to memory position 2.

A recall can be cancelled by pressing any of the MEMORY buttons on the driver's seat during a recall (S, 1, or 2), or pressing any one of the power seat buttons, pressing the adjustable pedals button, or pressing either the LOCK or UNLOCK button on the RKE transmitter when not in the ignition switch. When a recall is cancelled, the driver's seat and the pedals stop moving. A delay of one second will occur before another recall can be selected.

NOTE: A chime sound may be heard if setting memory was inhibited for any reason.

To Disable A RKE Transmitter Linked To Memory

1. Turn the ignition switch to the OFF position and remove the key.

2. Press and release the memory SET button located on the driver's seat.

3. Within 10 seconds, press and release the UNLOCK button on the RKE transmitter.

To disable another RKE transmitter linked to either memory position, repeat Steps 1-3 for each RKE transmitter.

NOTE: The capability to link RKE transmitters to memory is enabled when delivered from the factory. The capability to link RKE transmitters to memory can be disabled (or later re-enabled) by an authorized dealer. For vehicles equipped with the Electronic vehicle Information Center (EVIC), refer to "Electronic Vehicle Information Center (EVIC)/Customer-Programmable Features" in "Understanding Your Instrument Panel" for further information.

Self-Limiting Control

The memory system includes a self-limiting control for full travel positioning of power seat and adjustable pedal movement (all directions). This self-limiting control may, however, develop an unintended movement limitation if an obstruction is encountered sometime during usage. One example of such an occurrence may include a box or package obstructing the full rearward movement of the driver's seat. Once the obstruction is removed, the self-limiting control may store a new maximum position. the self-limiting control may be reset by reaching the new stored position, then press and release MEMORY button 1 or 2. Continued seat travel beyond the new stored position will indicate the self-limiting control has been reset.

Driver Easy Exit And Easy Entry Control

This additional feature provides automatic driver's seat positioning which will enhance driver mobility into and out of the vehicle. The seat cushion will move rearward approximately 2.5 in (60 mm) when the key is removed from the ignition switch. The seat will move forward approximately 2.5 in (60 mm) when the key is placed into the ignition and turned out of the LOCK position. Each stored memory setting will have an associated Easy Exit and Easy Entry position. The Easy Exit and Easy Entry feature may be automatically disabled if the seat is positioned rearward enough and there is no benefit in moving the seat any farther rearward.

NOTE: The Easy Entry/Easy Exit feature can be enabled or disabled through the programmable features in the Electronic Vehicle Information Center (EVIC). Refer to "Electronic Vehicle Information Center (EVIC)/ Customer-Programmable Features" in "Understanding Your Instrument Panel" for further information.

TO OPEN AND CLOSE THE HOOD

To open the hood, two latches must be released.

1. Pull the hood release lever located below the steering wheel at the base of the instrument panel.

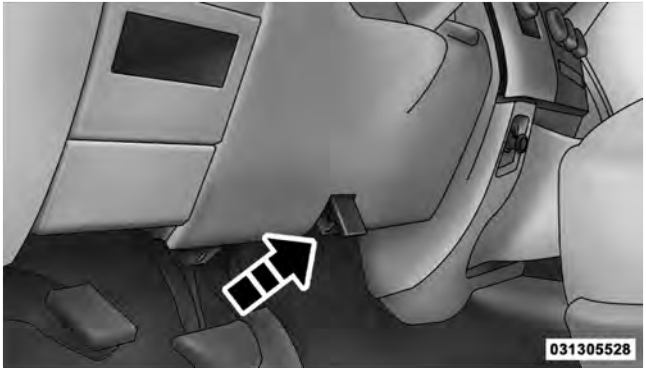

Hood Release

2. Reach into the opening beneath the center of the hood and push the safety latch lever from right to left to release it, before raising the hood.

Safety Latch (1500 Series Shown)

CAUTION!

To prevent possible damage, do not slam the hood to close it. Use a firm downward push at the front center of the hood to ensure that both latches engage.

WARNING!

Be sure the hood is fully latched before driving your vehicle. If the hood is not fully latched, it could open when the vehicle is in motion and block your vision. Failure to follow this warning could result in serious injury or death.

LIGHTS

The headlight switch is located on the left side of the instrument panel, next to the steering wheel. The headlight switch controls the operation of the headlights,

parking lights, instrument panel lights, cargo lights and fog lights (if equipped).

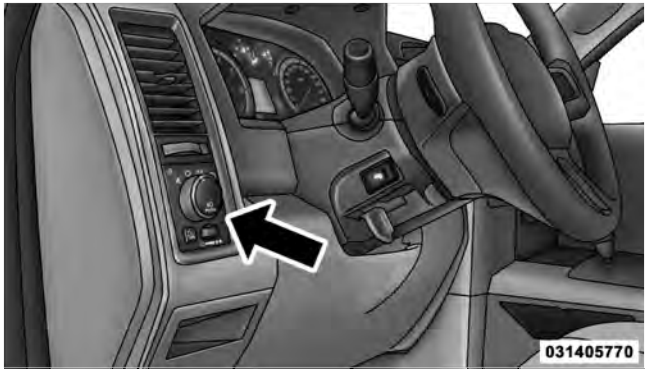

Headlight Switch Location

Your vehicle is equipped with plastic headlight and fog light (if equipped) lenses that are lighter and less susceptible to stone breakage than glass lights. Plastic is not as scratch resistant as glass and therefore different lens cleaning procedures must be followed.

To minimize the possibility of scratching the lenses and reducing light output, avoid wiping with a dry cloth. To remove road dirt, wash with a mild soap solution followed by rinsing.

CAUTION!

Do not use abrasive cleaning components, solvents, steel wool or other abrasive materials to clean the lenses.

Headlights

To turn on the headlights, rotate the headlight switch clockwise. When the headlight switch is on the parking lights, taillights, license plate light and instrument panel lights are also turned on. To turn off the headlights, rotate the headlight switch back to the O (Off) position.

Automatic Headlights — If Equipped

This system automatically turns the headlights on or off according to ambient light levels. To turn the system on, rotate the headlight switch to the A (AUTO) position.

031405773

Automatic Headlight Position

When the system is on, the Headlight Delay feature is also on. This means the headlights will stay on for up to 90 seconds after you turn the ignition switch to the OFF position. To turn the automatic headlights off, turn the headlight switch out of the AUTO position.

NOTE: The engine must be running before the headlights will turn on in the Automatic Mode.

Headlight Delay

To aid in your exit, your vehicle is equipped with a headlight delay that will leave the headlights on for approximately 90 seconds. This delay is initiated when the ignition is turned OFF while the headlight switch is on, and then the headlight switch is cycled off. Headlight delay can be cancelled by either turning the headlight switch on then off, or by turning the ignition ON.

The headlight delay time is programmable on vehicles equipped with an Electronic Vehicle Information Center (EVIC). Refer to "Electronic Vehicle Information Center (EVIC)/Customer-Programmable Features (SETUP)" in "Understanding Your Instrument Panel" for further information.

Parking Lights And Panel Lights

To turn on the parking lights and instrument panel lights, rotate the headlight switch clockwise to the parking light symbol. To turn off the parking lights, rotate the headlight switch back to the O (Off) position.

Fog Lights — If Equipped

The fog lights are turned on by rotating the headlight switch to the parking light or headlight position and pushing in the headlight rotary control.

Fog Light Switch

The fog lights will operate only when the parking lights are on or when the vehicle headlights are on low beam. An indicator light located in the instrument cluster will illuminate when the fog lights are on. The fog lights will turn off when the switch is pushed a second time, when the headlight switch is rotated to the off position, or the high beam is selected.

Interior Lights

Courtesy and dome lights are turned on when the front doors are opened, when the dimmer control (rotating wheel on the bottom of the switch) is rotated to the far right detent position, or if equipped, when the UNLOCK button is pressed on the Remote Keyless Entry (RKE) transmitter. When a door is open and the interior lights are on, rotating the dimmer control all the way left, to the OFF detent, will cause all the interior lights to go out. This is also known as the "Party" mode because it allows the doors to stay open for extended periods of time without discharging the vehicle's battery.

The brightness of the instrument panel lighting can be regulated by rotating the dimmer control right (brighter) or left (dimmer). When the headlights are on you can

supplement the brightness of the odometer, trip odometer, radio and overhead console by rotating the control to the right until you hear a click. This feature is termed the "Parade" mode and is useful when headlights are required during the day.

Dimmer Control

Cargo Light

The cargo lights are turned on by pressing on the cargo button.

Cargo Light Switch

The cargo lights will also turn on for approximately 30 seconds when a RKE transmitter UNLOCK button is pressed, as part of the Illuminated Entry feature.

Lights-On Reminder

If the headlights, parking lights, or cargo lights are left on after the ignition is turned OFF, a chime will sound when the driver's door is opened.

Battery Saver

To protect the life of your vehicle's battery, load shedding is provided for both the interior and exterior lights.

If the ignition is OFF and any door is left ajar for 10 minutes or the dimmer control is rotated right for 10 minutes, the interior lights will automatically turn off.

If the headlights remain on while the ignition is cycled OFF, the exterior lights will automatically turn off after eight minutes. If the headlights are turned on and left on for eight minutes while the ignition is OFF, the exterior lights will automatically turn off.

NOTE: Battery saver mode is cancelled if the ignition is ON.

Daytime Running Lights (DRL) — If Equipped

The headlights on your vehicle will illuminate when the engine is started and the transmission is in any gear except PARK. This provides a constant "Lights ON" condition until the ignition is turned OFF. The lights illuminate at less than 50% of normal intensity. If the parking brake is applied, the Daytime Running Lights (DRL) will turn OFF. Also, if a turn signal is activated, the DRL lamp on the same side of the vehicle may turn off for the duration of the turn signal activation. Once the turn signal is no longer active, the DRL lamp will illuminate.

Multifunction Lever

The multifunction lever is located on the left side of the steering column.

Turn Signals

Move the multifunction lever up or down and the arrows on each side of the instrument cluster flash to show proper operation of the front and rear turn signal lights.

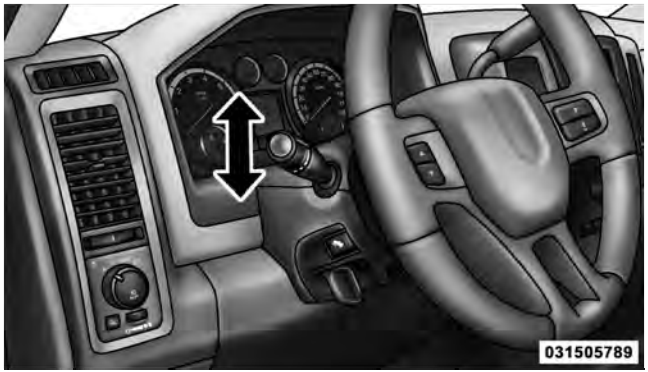

Turn Signal Lever

NOTE: If either light remains on and does not flash, or there is a very fast flash rate, check for a defective outside light bulb. If an indicator fails to light when the lever is moved, it would suggest that the indicator bulb is defective.

Lane Change Assist

Tap the lever up or down once, without moving beyond the detent, and the turn signal (right or left) will flash three times then automatically turn off.

Flash-To-Pass

You can signal another vehicle with your headlights by partially pulling the multifunction lever toward the steering wheel. This will cause the high beam headlights to turn on until the lever is released.

High/Low Beam Switch

Push the multifunction lever toward the instrument panel to switch the headlights to high beam. Pulling the multifunction back toward the steering wheel will turn the low beams back on, or shut the high beams off.

High/Low Beam Switch

WINDSHIELD WIPERS AND WASHERS

Windshield Wipers

The wipers and washers are operated by a switch in the multifunction lever. Turn the end of the handle to select the desired wiper speed.

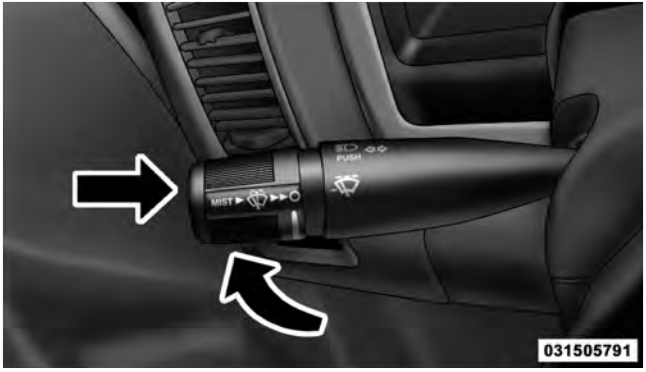

Windshield Wiper/Washer Switch

Intermittent Wiper System

The intermittent feature of this system was designed for use when weather conditions make a single wiping cycle, with a variable pause between cycles, desirable. For maximum delay between cycles, rotate the control knob into the upper end of the delay range.

The delay interval decreases as you rotate the knob until it enters the low continual speed position. The delay can be regulated from a maximum of about 18 seconds between cycles, to a cycle every one second. The delay intervals will double in duration when the vehicle speed is 10 mph (16 km/h) or less.

Windshield Washers

To use the windshield washer, push the washer knob, located on the end of the multifunction lever, inward to the second detent. Washer fluid will be sprayed and the wiper will operate for two to three cycles after the washer knob is released from this position. If the washer knob is depressed while in the delay range, the wiper will operate for several seconds after the washer knob is released. It will then resume the intermittent interval previously selected. If the washer knob is pushed while in the off position, the wiper will turn on and cycle approximately three times after the wash knob is released.

To prevent freeze-up of your windshield washer system in cold weather, select a solution or mixture that meets or exceeds the temperature range of your climate. This rating information can be found on most washer fluid containers.

WARNING!

Sudden loss of visibility through the windshield could lead to a collision. You might not see other vehicles or other obstacles. To avoid sudden icing of the windshield during freezing weather, warm the windshield with the defroster before and during windshield washer use.

Mist Feature

Push the washer knob, located on the end of the multi-function lever, inward to the first detent. The wipers will cycle one time and automatically shut off to clear road mist or spray from a passing vehicle.

TILT STEERING COLUMN

This feature allows you to tilt the steering column upward or downward. The tilt lever is located on the steering column, below the multifunction lever.

Pull the lever toward the steering wheel to unlock the steering column. With one hand firmly on the steering wheel, move the steering column up or down, as desired. Release the lever to lock the steering column firmly in place.

Tilt Steering Lever

WARNING!

Do not adjust the steering column while driving. Adjusting the steering column while driving or driving with the steering column unlocked, could cause the driver to lose control of the vehicle. Be sure the steering column is locked before driving your vehicle. Failure to follow this warning may result in serious injury or death.

HEATED STEERING WHEEL — IF EQUIPPED

The steering wheel contains a heating element that helps warm your hands in cold weather. The heated steering wheel has only one temperature setting. Once the heated steering wheel has been turned on it will operate for approximately 58 to 70 minutes before automatically shutting off. The heated steering wheel can shut off early or may not turn on when the steering wheel is already warm.

The heated steering wheel switch is located on the switch bank below the climate controls.

Press the switch to turn on the heated steering wheel. The light on the switch will illuminate to indicate the steering wheel heater is on. Pressing the switch a second time will turn off the heated steering wheel and light indicator.

NOTE: The engine must be running for the heated steering wheel to operate.

Vehicles Equipped With Remote Start

On models that are equipped with remote start, the heated steering wheel seat can be programmed to come on during a remote start. Refer to “Remote Starting System — If Equipped” in “Things to Know Before Starting Your Vehicle” for further information.

WARNING!

- **Persons who are unable to feel pain to the skin because of advanced age, chronic illness, diabetes, spinal cord injury, medication, alcohol use, exhaustion, or other physical conditions must exercise care when using the steering wheel heater. It may cause burns even at low temperatures, especially if used for long periods.**
- **Do not place anything on the steering wheel that insulates against heat, such as a blanket or cushion. This may cause the steering wheel heater to overheat.**

DRIVER ADJUSTABLE PEDALS — IF EQUIPPED

The adjustable pedals system is designed to allow a greater range of driver comfort for steering wheel tilt and seat position. This feature allows the brake, accelerator, and clutch pedals (if equipped) to move toward or away from the driver to provide improved position with the steering wheel.

The adjustable pedal switch is located to the left side of the steering column.

Adjustable Pedals Switch

- The pedals can be adjusted with the ignition OFF.

- The pedals **cannot** be adjusted when the vehicle is in REVERSE or when the Electronic Speed Control System is on. The following messages will be displayed on vehicles equipped with the Electronic Vehicle Information System (EVIC) if the pedals are attempted to be adjusted when the system is locked out ("Adjustable Pedal Disabled — Cruise Control Engaged" or "Adjustable Pedal Disabled — Vehicle In Reverse".

CAUTION!

Do not place any article under the adjustable pedals or impede its ability to move as it may cause damage to the pedal controls. Pedal travel may become limited if movement is stopped by an obstruction in the adjustable pedal's path.

WARNING!

Do not adjust the pedals while the vehicle is moving. You could lose control and have an accident. Always adjust the pedals while the vehicle is parked.

ELECTRONIC SPEED CONTROL — IF EQUIPPED

When engaged, Electronic Speed Control takes over the accelerator operation at speeds greater than 25 mph (40 km/h). The Electronic Speed Control lever is located on the right side of the steering wheel.

81bc4c2c

Electronic Speed Control Lever

NOTE: In order to ensure proper operation, the Electronic Speed Control System has been designed to shut down if multiple Speed Control functions are operated at the same time. If this occurs, the Electronic Speed Control System can be reactivated by pushing the Electronic Speed Control ON/OFF button and resetting the desired vehicle set speed.

To Activate

Push the ON/OFF button (located in the end of the lever) once and the cruise indicator light (located in the message window of the cluster) will illuminate showing that the Electronic Speed Control system is on. To turn the Electronic Speed Control system off, push the ON/OFF button a second time and both the Electronic Speed Control system and indicator will turn off.

WARNING!

Leaving the Electronic Speed Control system on when not in use is dangerous. You could accidently set the system or cause it to go faster than you want. You could lose control and have an accident. Always leave the Electronic Speed Control system off when you are not using it.

To Set A Desired Speed

Turn the Electronic Speed Control ON. When the vehicle has reached the desired speed, press the SET lever downward and then release. Lift your foot off the accelerator and the vehicle will operate at the selected speed.

Deactivating Electronic Speed Control

A soft tap on the brake pedal or pulling the Electronic Speed Control lever (CANCEL) toward you will deactivate the Electronic Speed Control without erasing the set speed memory. Pushing the ON/OFF button to the OFF position or turning OFF the ignition erases the set speed memory.

To Resume Speed

To resume a previously set speed, raise the Electronic Speed Control lever (RESUME ACCEL) upwards and release. Resume can be used at any speed above 30 mph (50 km/h).

Varying The Speed Setting

When the Electronic Speed Control is set, you can increase speed by pushing up and holding the RESUME ACCEL lever. If the lever is continually held in the RESUME ACCEL position, the set speed will continue to increase until the lever is released, then the new set speed will be established.

Tapping the RESUME ACCEL lever once will result in a 1 mph (2 km/h) increase in set speed. Each subsequent tap of the lever results in an increase of 1 mph (2 km/h).

To decrease speed while the Electronic Speed Control is set, push down and hold the SET DECEL lever. If the lever is continually held in the SET DECEL position, the set speed will continue to decrease until the lever is released. Release the lever when the desired speed is reached, and the new set speed will be established.

Tapping the SET DECEL lever once will result in a 1 mph (2 km/h) decrease in set speed. Each subsequent tap of the lever results in a decrease of 1 mph (2 km/h).

To Accelerate For Passing

Press the accelerator as you would normally. When the pedal is released, the vehicle will return to the set speed.

NOTE: The Electronic Speed Control system maintains speed up and down hills. A slight speed change on moderate hills is normal.

Your vehicle may experience a downshift (automatic transmissions only) while climbing uphill or descending downhill. This downshift is necessary to maintain vehicle set speed.

On steep hills a greater speed loss or gain may occur so it may be preferable to drive without Electronic Speed Control.

WARNING!

Electronic Speed Control can be dangerous where the system cannot maintain a constant speed. Your vehicle could go too fast for the conditions, and you could lose control and have an accident. Do not use Electronic Speed Control in heavy traffic or on roads that are winding, icy, snow-covered or slippery.

PARKSENSE® REAR PARK ASSIST — IF EQUIPPED

The ParkSense® Rear Park Assist system provides visual and audible indications of the distance between the rear fascia and a detected obstacle when backing up, e.g. during a parking maneuver. Refer to ParkSense® System Usage Precautions for limitations of this system and recommendations.

ParkSense® will retain the last system state (enabled or disabled) from the last ignition cycle when the ignition is changed to the ON/RUN position.

ParkSense® can be active only when the shift lever is in REVERSE. If ParkSense® is enabled at this shift lever position, the system will remain active until the vehicle speed is increased to approximately 11 mph (18 km/h) or above. The system will become active again if the vehicle speed is decreased to speeds less than approximately 10 mph (16 km/h).

ParkSense® Sensors

The four ParkSense® sensors, located in the rear fascia/bumper, monitor the area behind the vehicle that is within the sensors' field of view. The sensors can detect obstacles from approximately 12 in (30 cm) up to 79 in (200 cm) from the rear fascia/bumper in the horizontal direction, depending on the location, type and orientation of the obstacle.

ParkSense® Warning Display

The ParkSense® Warning screen will only be displayed if Sound and Display is selected from the Customer- Programmable Features section of the Electronic Vehicle Information Center (EVIC). Refer to "Electronic Vehicle Information Center (EVIC)/Personal Settings (Customer-Programmable Features)" in "Understanding Your Instrument Panel" for further information.

The ParkSense® Warning Display is located in the Instrument cluster's EVIC display. It provides both visual and

audible warnings to indicate the distance between the rear fascia/bumper and the detected obstacle.

Rear ParkSense® Display

ParkSense® Display

When the vehicle is in REVERSE, the warning display will turn ON indicating the system status.

Park Assist System On

Park Assist System Off

Slow Tone

The system will indicate a detected obstacle by showing three solid arcs and will produce a one-half second tone. As the vehicle moves closer to the object the EVIC display will show fewer arcs and the sound tone will change from slow, to fast, to continuous.

Fast Tone

Continuous Tone

The vehicle is close to the obstacle when the EVIC display shows one flashing arc and sounds a continuous tone. The following chart shows the warning alert operation when the system is detecting an obstacle:

WARNING ALERTS					
Rear Distance (in/cm)	Greater than 79 in (200 cm)	79-39 in (200-100 cm)	39-25 in (100-65 cm)	25-12 in (65-30 cm)	Less than 12 in (30 cm)
Audible Alert Chime	None	Single 1/2 Second Tone	Slow	Fast	Continuous
Display Message	Park Assist ON	Warning Object Detected	Warning Object Detected	Warning Object Detected	Warning Object Detected
Arcs	None	3 Solid (Continuous)	3 Slow Flashing	2 Slow Flashing	1 Slow Flashing
Radio Mute	No	Yes	Yes	Yes	Yes

NOTE: ParkSense® will MUTE the radio, if on, when the system is sounding an audio tone.

Enabling And Disabling ParkSense®

ParkSense® can be enabled and disabled with a switch located in the switch bank of the instrument panel or through the Customer-Programmable Features section of the EVIC. The available choices are: OFF, Sound Only, or Sound and Display. Refer to "Electronic Vehicle Information Center (EVIC)/Personal Settings (Customer-Programmable Features)" in "Understanding Your Instrument Panel" for further information.

When the ParkSense® switch is pressed to disable the system, the instrument cluster will display the "PARK ASSIST OFF" message for

approximately five seconds. Refer to “Electronic Vehicle Information Center (EVIC)” in “Understanding Your Instrument Panel” for further information. When the shift lever is moved to REVERSE and the system is disabled, the EVIC will display the “PARK ASSIST OFF” message for as long as the vehicle is in REVERSE.

The ParkSense® switch LED will be ON when ParkSense® is disabled or defective. The ParkSense® switch LED will be OFF when the system is enabled.

The ParkSense® system uses four sensors located in the rear bumper fascia to scan for obstacles up to 79 in (200 cm) away from the rear bumper fascia. The warning display located above in the Instrument Cluster’s EVIC provides both visual and audible warnings to indicate the range of the object.

Service The ParkSense® Rear Park Assist System

When the ParkSense® Rear Park Assist System is malfunctioning, the instrument cluster will actuate a single chime, once per ignition cycle, and it will display the “CLEAN PARK ASSIST SENSORS” or the “SERVICE PARK ASSIST SYSTEM” message. Refer to “Electronic Vehicle Information Center (EVIC)” in “Understanding Your Instrument Panel” for further information. When the shift lever is moved to REVERSE and the system has detected a faulted condition, the EVIC will display the “CLEAN PARK ASSIST SENSORS” or the “SERVICE PARK ASSIST SYSTEM” message for as long as the vehicle is in REVERSE. Under this condition, ParkSense® will not operate.

If “CLEAN PARK ASSIST SENSORS” appears in the Electronic Vehicle Information Center (EVIC) and the rear fascia/bumper is clean and clear of snow, ice, mud, dirt or other obstruction, see your authorized dealer.

If “SERVICE PARK ASSIST SYSTEM” appears in the EVIC, see your authorized dealer.

Cleaning The ParkSense® System

Clean the ParkSense® sensors with water, car wash soap and a soft cloth. Do not use rough or hard cloths. Do not scratch or poke the sensors. Otherwise, you could damage the sensors.

ParkSense® System Usage Precautions

NOTE:

- Ensure that the rear bumper is free of snow, ice, mud, dirt and debris to keep the ParkSense® system operating properly.
- Jackhammers, large trucks, and other vibrations could affect the performance of ParkSense®.
- When you turn ParkSense® off, the instrument cluster will display "PARK ASSIST OFF." Furthermore, once you turn ParkSense® off, it remains off until you turn it on again, even if you cycle the ignition key.
- When you move the shift lever to the REVERSE position and ParkSense® is turned off, the instrument cluster will display "PARK ASSIST OFF" message for as long as the vehicle is in REVERSE.
- ParkSense®, when on, will MUTE the radio when it is sounding a tone.
- Clean the ParkSense® sensors regularly, taking care not to scratch or damage them. The sensors must not be covered with ice, snow, slush, mud, dirt or debris. Failure to do so can result in the system not working properly. The ParkSense® system might not detect an obstacle behind the fascia/bumper, or it could provide a false indication that an obstacle is behind the fascia/bumper.
- Objects such as bicycle carriers, trailer hitches, etc., must not be placed within 12 in (30 cm) from the rear fascia/bumper while driving the vehicle. Failure to do so can result in the system misinterpreting a close

object as a sensor problem, causing the "SERVICE PARK ASSIST SYSTEM" message to be displayed in the instrument cluster.

- On vehicles equipped with a tailgate, ParkSense® should be disabled when the tailgate is in the lowered or open position and the vehicle is in REVERSE. A lowered tailgate could provide a false indication that an obstacle is behind the vehicle.

CAUTION!

- **ParkSense® is only a parking aid and it is unable to recognize every obstacle, including small obstacles. Parking curbs might be temporarily detected or not detected at all. Obstacles located above or below the sensors will not be detected when they are in close proximity.**

(Continued)

CAUTION! (Continued)

- **The vehicle must be driven slowly when using ParkSense® in order to be able to stop in time when an obstacle is detected. It is recommended that the driver looks over his/her shoulder when using ParkSense®.**

WARNING!

- **Drivers must be careful when backing up even when using the ParkSense® Rear Park Assist System. Always check carefully behind your vehicle, look behind you, and be sure to check for pedestrians, animals, other vehicles, obstructions, and blind spots before backing up. You are responsible for safety and must continue to pay attention to your surroundings. Failure to do so can result in serious injury or death.**

(Continued)

WARNING! (Continued)

- **Before using the ParkSense® Rear Park Assist System, it is strongly recommended that the ball mount and hitch ball assembly is disconnected from the vehicle when the vehicle is not used for towing. Failure to do so can result in injury or damage to vehicles or obstacles because the hitch ball will be much closer to the obstacle than the rear fascia when the warning display turns on the single flashing arc and sounds the continuous tone. Also, the sensors could detect the ball mount and hitch ball assembly, depending on its size and shape, giving a false indication that an obstacle is behind the vehicle.**

PARKVIEW® REAR BACK UP CAMERA — IF EQUIPPED

Your vehicle may be equipped with the ParkView® Rear Back Up Camera that allows you to see an on-screen image of the rear surroundings of your vehicle whenever the shift lever is put into REVERSE. The image will be displayed on the Navigation/Multimedia radio display screen along with a caution note to "check entire surroundings" across the top of the screen. After five seconds this note will disappear. The ParkView® camera is located to the left of the tailgate handle.

When the vehicle is shifted out of REVERSE, the rear camera mode is exited and the navigation or audio screen appears again.

When displayed, static grid lines will illustrate the width of the vehicle while a dashed center-line will indicate the center of the vehicle to assist with aligning to a hitch/receiver. The static grid lines will show separate zones that will help indicate the distance to the rear of the vehicle. The following table shows the approximate distances for each zone:

Zones	Distance to the rear of the vehicle
Red	0 - 1 ft (0 - 30 cm)
Yellow	1 ft - 3 ft (30 cm - 1 m)
Green	3 ft or greater (1 m or greater)

WARNING!

Drivers must be careful when backing up even when using the ParkView® Rear Back Up Camera. Always check carefully behind your vehicle, and be sure to check for pedestrians, animals, other vehicles, obstructions, or blind spots before backing up. You are responsible for the safety of your surroundings and must continue to pay attention while backing up. Failure to do so can result in serious injury or death.

CAUTION!

- **To avoid vehicle damage, ParkView® should only be used as a parking aid. The ParkView® camera is unable to view every obstacle or object in your drive path.**
- **To avoid vehicle damage, the vehicle must be driven slowly when using ParkView® to be able to stop in time when an obstacle is seen. It is recommended that the driver look frequently over his/her shoulder when using ParkView®.**

NOTE: If snow, ice, mud, or any foreign substance builds up on the camera lens, clean the lens, rinse with water, and dry with a soft cloth. Do not cover the lens.

Turning ParkView® On Or Off — With Navigation/Multimedia Radio

1. Press the “menu” hard-key.
2. Select “system setup” soft-key.
3. Press the “camera setup” soft-key.
4. Enable or disable the rear camera feature by selecting “enable rear camera in reverse” soft key and pressing the “save” soft-key.
5. Press the “save” soft key.

Turning ParkView® On Or Off — Without Navigation/Multimedia Radio

1. Press the “menu” hard-key.
2. Select “system setup” soft-key.
3. Enable or disable the rear camera feature by selecting “enable rear camera in reverse” soft-key.

OVERHEAD CONSOLE — IF EQUIPPED

The overhead console is located on the headliner above the review mirror. The overhead console contains the following features:

- Courtesy/Reading Lights
- Power Sunroof Switch — If Equipped
- Power Sliding Rear Window Switch — If Equipped
- Universal Garage Door Opener — If Equipped

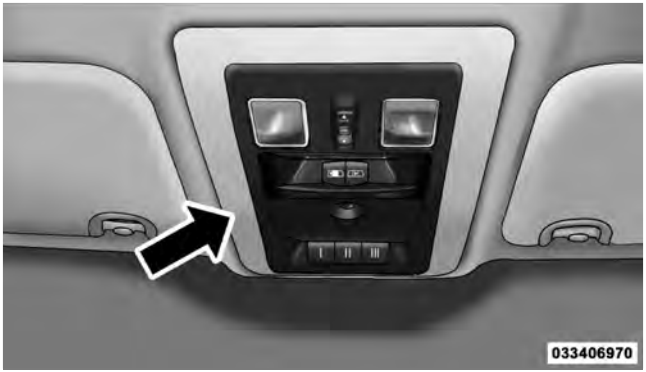

Overhead Console

Courtesy/Reading Lights

Both lights in the overhead console and rear passenger compartment will illuminate as courtesy lights when a door is opened, when the dimmer control is rotated to the courtesy light position (full right position), or when the UNLOCK button is pressed on the Remote Keyless Entry

(RKE) transmitter, if equipped. These lights are also operated individually as reading lights by pressing on the corresponding lens.

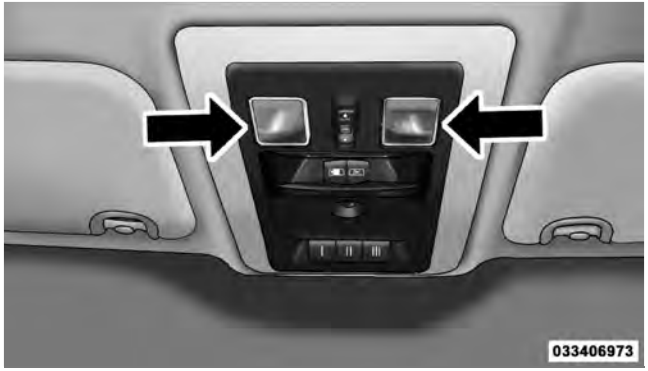

Front Courtesy/Reading Lights

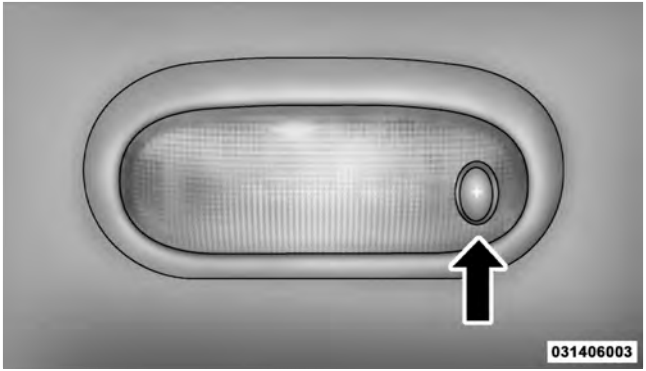

Rear Passenger Courtesy/Reading Light

NOTE: The courtesy/reading lights will remain on until the switch is pressed a second time, so be sure they have been turned off before leaving the vehicle. If the interior lights are left on after the ignition is turned OFF, they will extinguish after 15 minutes.

GARAGE DOOR OPENER — IF EQUIPPED

HomeLink® replaces up to three remote controls (hand-held transmitters) that operate devices such as garage door openers, motorized gates, lighting or home security systems. The HomeLink® unit operates off your vehicle's battery.

The HomeLink® buttons are located in the overhead console designating the different HomeLink® channels.

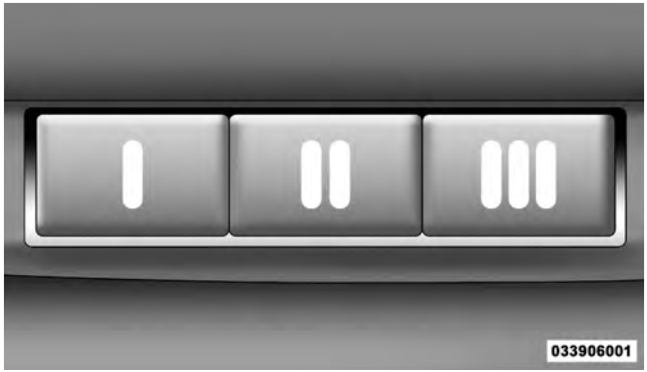

HomeLink® Buttons

NOTE: HomeLink® is disabled when the Vehicle Security Alarm is active.

WARNING!

- **Your motorized door or gate will open and close while you are training the Universal Transceiver. Do not train the transceiver if people, pets or other objects are in the path of the door or gate. Only use this transceiver with a garage door opener that has a "stop and reverse" feature as required by federal safety standards. This includes most garage door opener models manufactured after 1982. Do not use a garage door opener without these safety features. Call toll-free 1–800–355–3515 or, on the Internet at www.HomeLink.com for safety information or assistance.**
- **Vehicle exhaust contains carbon monoxide, a dangerous gas. Do not run your vehicle in the garage while training the transceiver. Exhaust gas can cause serious injury or death.**

Programming HomeLink®

Before You Begin

If you have not trained any of the HomeLink® buttons, erase all channels before you begin training.

To do this, press and hold the two outside buttons for 20 seconds. The EVIC will display "CLEARING CHANNELS". Release the buttons when the EVIC message states "CHANNELS CLEARED".

It is recommended that a new battery be placed in the handheld transmitter of the device being copied to HomeLink® for more efficient training and accurate transmission of the radio-frequency signal.

It is also advised to park outside the garage while training.

1. Turn the ignition switch to the ON/RUN position.

2. Place the handheld transmitter 1 to 3 in (3 to 8 cm) from the HomeLink® buttons while keeping the EVIC display in view.

For optimal training, point the battery end of the handheld transmitter away from the HomeLink®

3. Simultaneously press and hold both the chosen HomeLink® button and the handheld transmitter button until the EVIC display changes from "CHANNEL # TRAINING" to "CHANNEL # TRAINED".

Then release both the HomeLink® and handheld transmitter buttons.

If the EVIC display states "DID NOT TRAIN" repeat Step 3. If the signal is too weak, replace the battery in the handheld transmitter.

It may take up to 30 seconds or longer in rare cases. The garage door may open and close while you train.

NOTE: Some gate operators and garage door openers may require you to replace Step 3 with procedures noted in the "Gate Operator/Canadian Programming" section.

4. Press and hold the just-trained HomeLink® button. If the channel has been trained, the EVIC display will now state "CHANNEL # TRANSMIT".

If the EVIC display still states "CHANNEL # TRAINING" repeat Step 3.

NOTE: After training a HomeLink® channel, if the garage door does not operate with HomeLink® and the garage door opener was manufactured after 1995, the garage door opener may have rolling code. If so, proceed to Step 5.

5. Programming A Rolling Code System

At the garage door opener motor (in the garage), locate the "Learn" or "Training" button.

This can usually be found where the hanging antenna wire is attached to the garage door opener motor (it is NOT the button normally used to open and close the door).

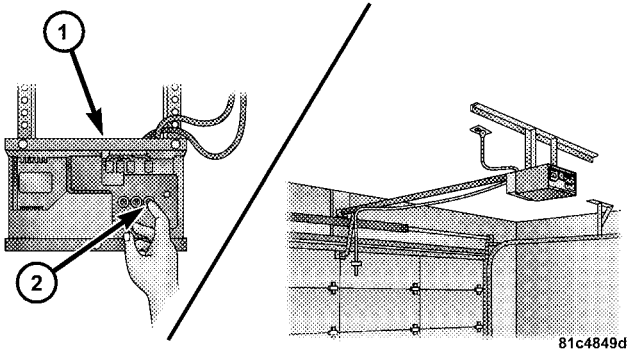

1 — Garage Door Opener
2 — Training Button

6. Firmly press and release the LEARN or TRAINING button. The name and color of the button may vary by manufacturer.

NOTE: You have 30 seconds in which to initiate the next step after the LEARN button has been pressed.

7. Return to the vehicle and press the programmed HomeLink® button twice (holding the button for two seconds each time). If the device is plugged in and activates, programming is complete.

If the device does not activate, press the button a third time (for two seconds) to complete the training.

If you have any problems, or require assistance, please call toll-free 1–800–355–3515 or, on the Internet at www.HomeLink.com for information or assistance.

To program the remaining two HomeLink® buttons, repeat each step for each remaining button. DO NOT erase the channels.

Gate Operator/Canadian Programming

Canadian radio-frequency laws require transmitter signals to "time-out" (or quit) after several seconds of transmission – which may not be long enough for HomeLink® to pick up the signal during programming. Similar to this Canadian law, some U.S. gate operators are designed to "time-out" in the same manner.

It may be helpful to unplug the device during the cycling process to prevent possible overheating of the garage door or gate motor.

If you are having difficulties programming a garage door opener or a gate operator, replace "Programming HomeLink" Step 3 with the following:

3. **Continue to press and hold the HomeLink® button, while you press and release ("cycle"), your handheld transmitter every two seconds until HomeLink® has successfully accepted the frequency signal.** The EVIC display will change from "CHANNEL # TRAINING" to "CHANNEL # TRAINED."

If you unplugged the device for training, plug it back in at this time.

Then proceed with Step 4 under "Programming HomeLink®" earlier in this section.

Using HomeLink®

To operate, press and release the programmed HomeLink® button. Activation will now occur for the trained device (i.e., garage door opener, gate operator, security system, entry door lock, home/office lighting, etc.,). The handheld transmitter of the device may also be used at any time.

Reprogramming A Single HomeLink® Button

To reprogram a channel that has been previously trained, follow these steps:

1. Turn the ignition switch to the ON/RUN position.

2. Press and hold the desired HomeLink® button for 20 seconds until the EVIC display states "CHANNEL # TRAINING." **Do not release the button.**

3. **Without releasing the button,** proceed with Programming HomeLink® Step 2 and follow all remaining steps.

Security

It is advised to erase all channels before you sell or turn in your vehicle.

To do this, press and hold the two outside buttons for 20 seconds until the EVIC message states "CHANNELS CLEARED." Note that all channels will be erased. Individual channels cannot be erased.

The HomeLink® Universal Transceiver is disabled when the Vehicle Security Alarm is active.

Troubleshooting Tips

If you are having trouble programming HomeLink®, here are some of the most common solutions:

- Replace the battery in the original transmitter.
- Press the LEARN button on the garage door opener to complete the training for rolling code.
- Did you unplug the device for training, and remember to plug it back in?

If you are having any problems or require assistance, please call toll-free 1–800–355–3515 or, on the Internet at www.HomeLink.com for information or assistance.

General Information

This device complies with FCC rules Part 15 and Industry Canada RSS-210. Operation is subject to the following two conditions:

1. This device may not cause harmful interference.

2. This device must accept any interference that may be received including interference that may cause undesired operation.

NOTE: The transmitter has been tested and it complies with FCC and IC rules. Changes or modifications not expressly approved by the party responsible for compliance could void the user's authority to operate the device.

The term "IC:" before the certification/registration number only signifies that Industry Canada technical specifications were met.

POWER SUNROOF — IF EQUIPPED

The power sunroof switch is located on the overhead console between the courtesy/reading lights.

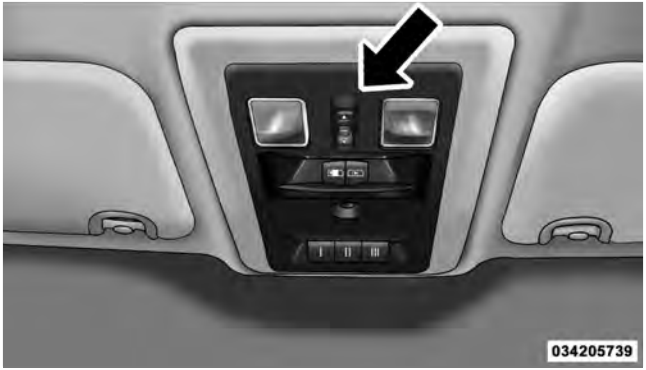

Power Sunroof Switch

WARNING!

- **Never leave children alone in a vehicle. Leaving unattended children in a vehicle is dangerous for a number of reasons. A child or others could be seriously or fatally injured. do not leave the key in the ignition. A child could operate power windows, other controls, or move the vehicle.**
- **In a collision, there is a greater risk of being thrown from a vehicle with an open sunroof. You could also be seriously injured or killed. Always fasten your seat belt properly and make sure all passengers are properly secured too.**
- **Do not allow small children to operate the sunroof. Never allow your fingers, other body parts, or any object to project through the sunroof opening. Injury may result.**

Open Sunroof — Express Mode

Press the switch rearward and release it within one-half second and the sunroof will open automatically from any position. The sunroof will open fully and stop automatically. This is called "Express Open". During Express Open operation, any movement of the sunroof switch will stop the sunroof.

Opening Sunroof — Manual Mode

To open the sunroof, press and hold the switch rearward to full open. Any release of the switch will stop the movement and the sunroof will remain in a partially opened condition until the switch is pushed and held rearward again.

Closing Sunroof — Express

Press the switch forward and release it within one-half second and the sunroof will close automatically from any

position. The sunroof will close fully and stop automatically. This is called "Express Close". During Express Close operation, any movement of the switch will stop the sunroof.

Closing Sunroof — Manual Mode

To close the sunroof, press and hold the switch in the forward position. Any release of the switch will stop the movement and the sunroof will remain in a partially closed condition until the switch is pushed and held forward again.

Pinch Protect Feature

This feature will detect an obstruction in the opening of the sunroof during Express Close operation. If an obstruction is detected, the sunroof will automatically retract. Remove the obstruction if this occurs. Next, press the switch forward and release to Express Close.

NOTE: If three consecutive sunroof close attempts result in Pinch Protect reversals, the fourth close attempt will be a Manual Close movement with Pinch Protect disabled.

Pinch Protect Override

If a known obstruction (ice, debris, etc.) prevents closing the sunroof, press the switch forward and hold for two seconds after the reversal occurs. This allows the sunroof to move toward the closed position.

NOTE: Pinch protection is disabled while the switch is pressed.

Venting Sunroof — Express

Press and release the "Vent" button, and the sunroof will open to the vent position. This is called "Express Vent", and will occur regardless of sunroof position. During Express Vent operation, any movement of the switch will stop the sunroof.

Sunshade Operation

The sunshade can be opened manually. However, the sunshade will open automatically as the sunroof opens.

NOTE: The sunshade cannot be closed if the sunroof is open.

Wind Buffeting

Wind buffeting can be described as the perception of pressure on the ears or a helicopter-type sound in the ears. Your vehicle may exhibit wind buffeting with the windows down, or the sunroof (if equipped) in certain open or partially open positions. This is a normal occurrence and can be minimized. If the buffeting occurs with the rear windows open, open the front and rear windows together to minimize the buffeting. If the buffeting occurs with the sunroof open, adjust the sunroof opening to minimize the buffeting or open any window.

Sunroof Maintenance

Use only a nonabrasive cleaner and a soft cloth to clean the glass panel.

Ignition Off Operation

The power sunroof switches remain active for up to approximately ten minutes after the ignition switch has been turned OFF. Opening either front door will cancel this feature.

For vehicles equipped with the EVIC, the power sunroof switch will remain active for up to approximately ten minutes after the ignition switch is turned to the LOCK position. Opening either front door will cancel this feature. The time is programmable. Refer to “Electronic Vehicle Information Center (EVIC)/Personal Settings (Customer-Programmable Features)” in “Understanding Your Instrument Panel” for further information.

ELECTRICAL POWER OUTLETS

The auxiliary 12 Volt (13 Amp) power outlets can provide power for in-cab accessories designed for use with the standard "cigar lighter" plug. The 12 Volt power outlets have a cap attached to the outlet indicating "12V DC", together with either a key symbol or a battery symbol.

A key symbol indicates that the key must be in the ON/RUN or ACC positions for the outlet to provide power. The battery symbol indicates that the outlet is connected to the battery, and can provide power at all times.

NOTE: To ensure proper operation a MOPAR® knob and element must be used.

CAUTION!

- **Do not exceed the maximum power of 160 Watts (13 Amps) at 12 Volts. If the 160 Watt (13 Amp) power rating is exceeded the fuse protecting the system will need to be replaced.**
- **Power outlets are designed for accessory plugs only. Do not insert any other object in the power outlets as this will damage the outlet and blow the fuse. Improper use of the power outlet can cause damage not covered by your warranty.**

The auxiliary power outlets can be found in the following locations:

- Lower left and lower right of the center stack — without floor mounted shifter.
- Inside the top storage tray — with floor mounted shifter.

Power Outlet — Floor Shifter

- Inside the upper lid of the center storage compartment — if equipped.

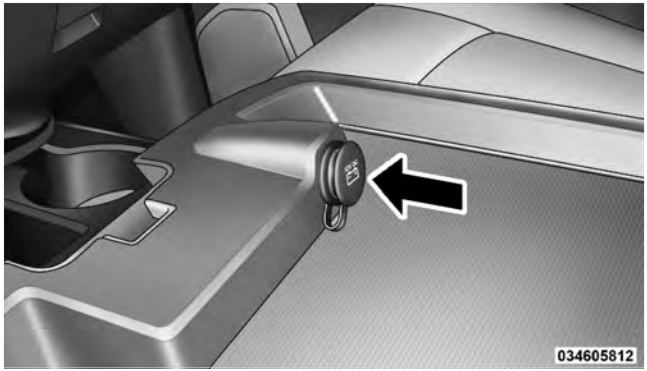

Power Outlet — Upper Lid

- Rear of the center console storage compartment — Quad Cab® or Crew Cab.

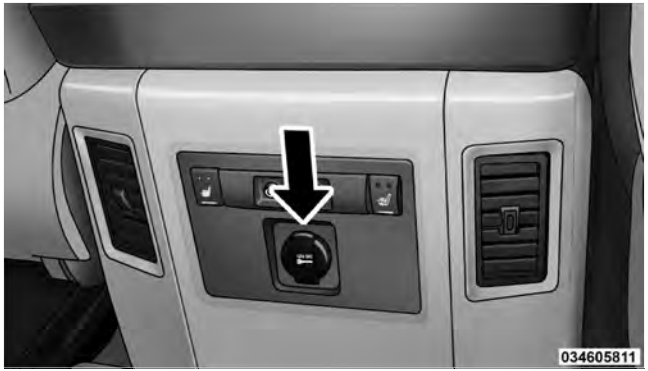

Power Outlet — Rear Center Console

The key symbol indicates that this outlet can supply power when the key is in the ON/RUN or ACC positions.

All accessories connected to the outlet(s) should be removed or turned off when the vehicle is not in use to protect the battery against discharge.

Power Outlet Fuse Locations

1 — M7 Fuse 20 A Yellow Power Outlet Center Seat (Opt) or with Console Rear
2 — M6 Fuse 20 A Yellow Cigar Lighter Instrument Panel or with Console Front
3 — M36 Fuse 20 A Yellow Power Outlet Instrument Panel or with Console Center

WARNING!

To avoid serious injury or death:

- **Only devices designed for use in this type of outlet should be inserted into any 12 Volt outlet.**
- **Do not touch with wet hands.**
- **Close the lid when not in use and while driving the vehicle.**
- **If this outlet is mishandled, it may cause an electric shock and failure.**

CAUTION!

- **Many accessories that can be plugged in draw power from the vehicle's battery, even when not in use (i.e., cellular phones, etc.). Eventually, if plugged in long enough, the vehicle's battery will discharge sufficiently to degrade battery life and/or prevent the engine from starting.**
- **Accessories that draw higher power (i.e., coolers, vacuum cleaners, lights, etc.), will discharge the battery even more quickly. Only use these intermittently and with greater caution.**
- **After the use of high power draw accessories, or long periods of the vehicle not being started (with accessories still plugged in), the vehicle must be driven a sufficient length of time to allow the generator to recharge the vehicle's battery.**

CIGAR LIGHTER AND ASH RECEIVER — IF EQUIPPED

A removable ash receiver and cigar lighter are available. For vehicles with a bench seat the cupholder tray can be used to hold the ash receiver.

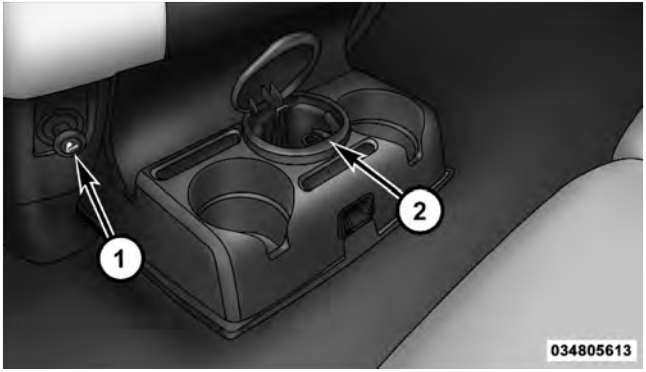

Ash Receiver and Cigar Lighter (Bench Seat)

1 — Cigar Lighter
2 — Ash Receiver

For vehicles equipped with an optional floor shifter.

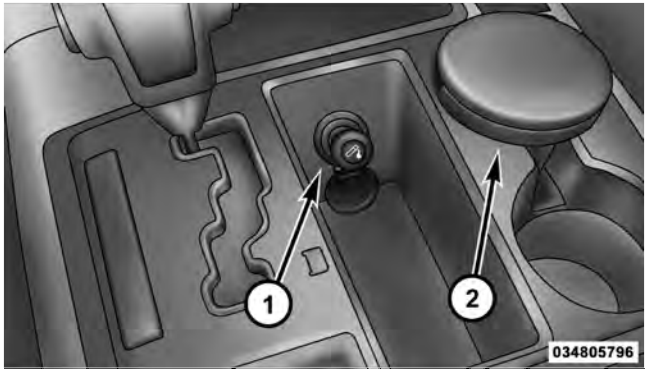

Optional Floor Shifter

1 — Cigar Lighter
2 — Ash Receiver

POWER INVERTER — IF EQUIPPED

A 115 Volt (150 Watts Maximum) outlet is located on the center stack of the instrument panel, to the right of the radio. This outlet can power cellular phones, electronics and other low power devices requiring power up to 150 Watts. Certain high-end video games, such as Playstation3 and XBox360 will exceed this power limit, as will most power tools.

The power inverter is designed with built-in overload protection. If the power rating of 150 Watts is exceeded, the power inverter will automatically shut down. Once the electrical device has been removed from the outlet the inverter should automatically reset. If the power rating exceeds approximately 170 Watts, the power inverter may have to be reset manually. To reset the inverter

manually press the power inverter button OFF and ON. To avoid overloading the circuit, check the power ratings on electrical devices prior to using the inverter.

Power Inverter Outlet

The power inverter switch is located on the switch bank below the Climate Controls. To turn on the power outlet, press the switch once. Press the switch a second time to turn the power outlet off.

NOTE:

- When the power inverter switch is pressed, there will be a delay of approximately one second before the power inverter status indicator turns on. The status indicator of the AC power inverter indicates whether the inverter is producing AC power.
- Due to built-in overload protection, the power inverter will shut down if the power rating is exceeded.

WARNING!

To avoid serious injury or death:

- **Do not use a three-prong adapter.**
- **Do not insert any objects into the receptacles.**
- **Do not touch with wet hands.**
- **Close the lid when not in use.**
- **If this outlet is mishandled it may cause an electric shock and failure.**

CUPHOLDERS

Front Instrument Panel Cupholders — (40–20–40 Seats)

The cupholders are located in the pull-out tray at the bottom of the center stack. The pull-out tray must be secured when opened. To secure the tray push down until it "clicks".

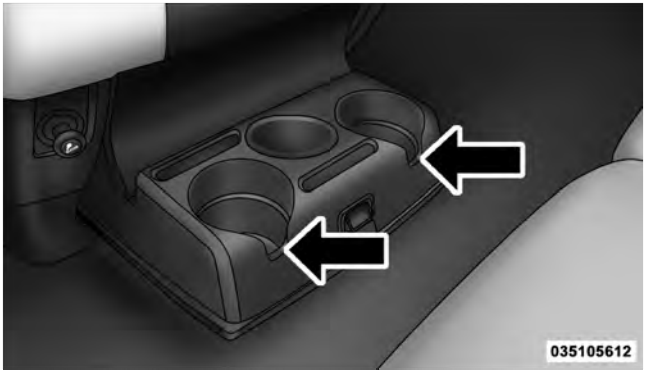

Front Cupholders

Front Instrument Panel Cupholders — Floor Mounted Shifter

For vehicles equipped with bucket seats and a floor mounted shifter there are two cupholders located in the floor console.

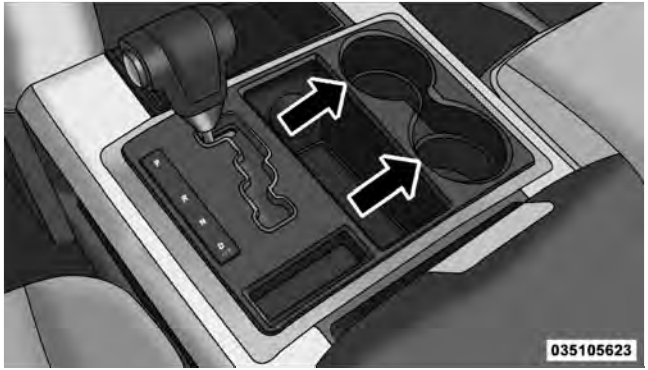

Cupholders (Floor Mounted Shifter)

Rear Cupholder — Quad Cab®

Quad Cab® vehicles may be equipped with a rear cupholder that consists of two cup wells for rear passenger convenience.

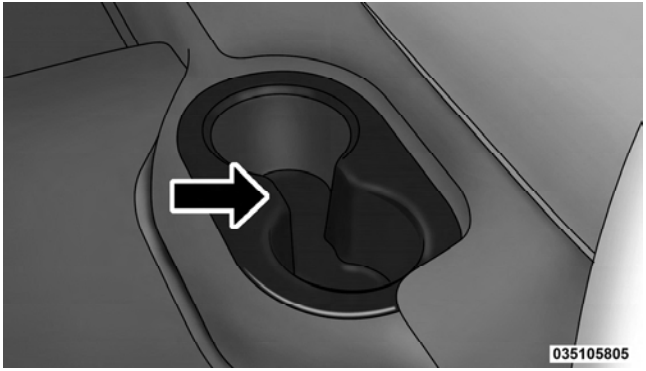

Rear Cup Wells

Rear Cupholder — Crew Cab

Crew Cab vehicles are equipped with rear cupholders located in the center armrest.

Crew Cab Rear Armrest Cupholder

STORAGE

Glove Box Storage

The glove box is located on the passenger side of the instrument panel and features both an upper and lower storage area.

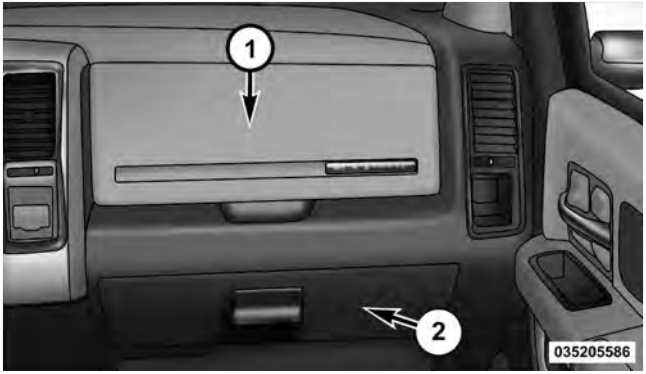

Glove Box

1 — Upper Glove Box
2 — Lower Glove Box

To open the upper glove box push upward on the handle release. The glove box door will automatically open.

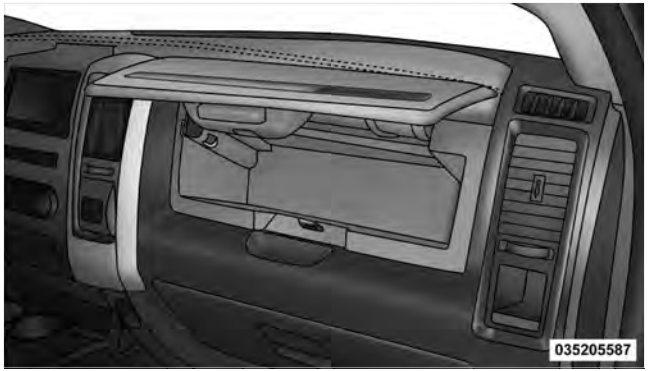

Upper Glove Box

To open the lower glove box, pull on the handle to release the latch and lower the door.

Lower Glove Box

Door Storage

Front Door Storage — If Equipped

Storage areas and bottle holders (drivers side only) are located in the door trim panels.

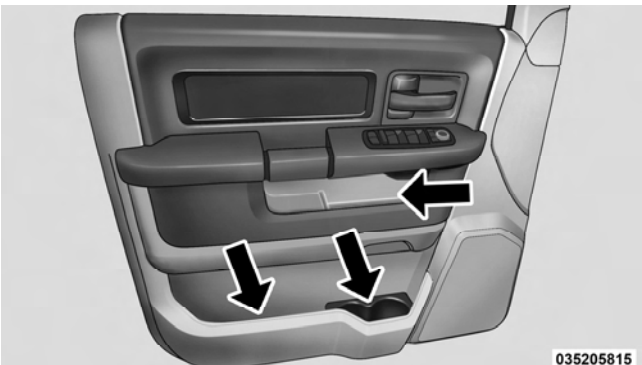

Front Door Storage

Rear Door Storage — Crew Cab

Storage compartments are located in both the driver and passenger door trim panels.

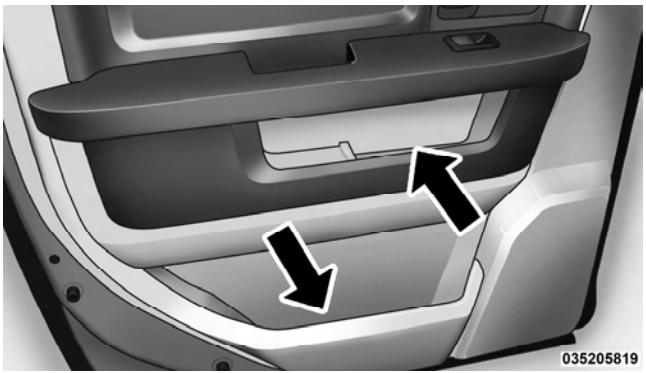

Rear Door Storage

Center Storage Compartment — If Equipped

The center storage compartment is located between the driver and passenger seats. The storage compartment provides an armrest and contains both and upper and lower storage area.

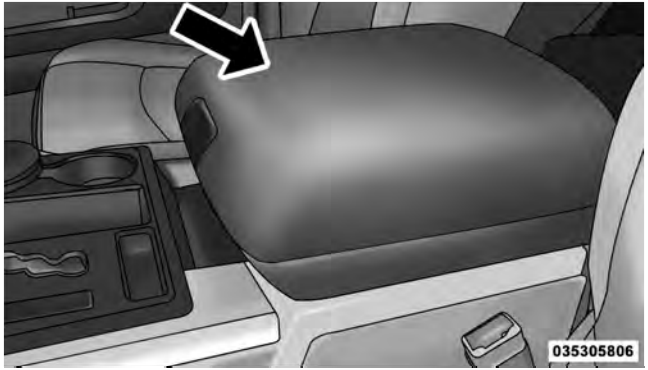

Center Storage Compartment

WARNING!

- **This armrest is not a seat. Anyone seated on the armrest could be seriously injured during vehicle operation, or a collision. Only use the center seating position when the armrest is fully upright.**
- **In a collision, the latch may open if the total weight of the items stored exceeds about 10 lbs (4.5 kg). These items could be thrown about endangering occupants of the vehicle. Items stored should not exceed a total of 10 lbs (4.5 kg).**

Pull on the upper handle on the front of the armrest to raise the cover. The upper storage area contains a 12 Volt power outlet that can be used to power small electrical devices, refer to "Electrical Power Outlets" for further information.

Upper Storage Compartment

With the upper lid closed, pull on the lower handle to open the lower storage bin.

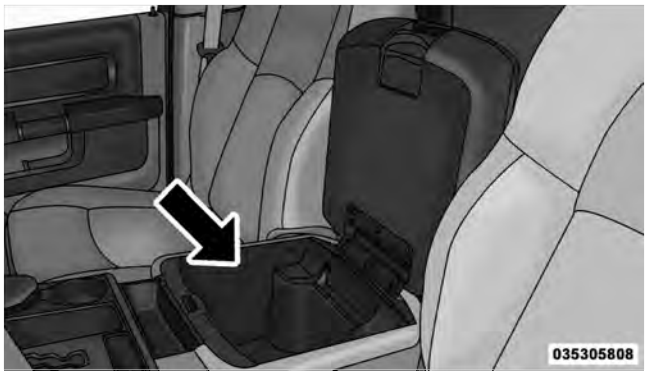

Lower Storage Bin

WARNING!

Do not operate this vehicle with a console compartment lid in the open position. Cellular phones, music players, and other handheld electronic devices should be stowed while driving. Use of these devices while driving can cause an accident due to distraction, resulting in death or injury.

Second Row In-Floor Storage Bin — If Equipped

In-floor storage bins are located in front of the second row seats and can be used for extra storage. The storage bins have removable liners that can be easily removed for cleaning.

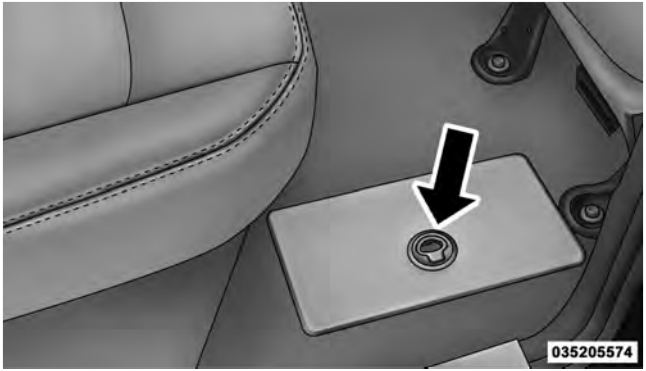

In-Floor Storage Bin And Latch

To open in-floor storage bin, lift upward on the handle of the latch and open the lid.

NOTE: The front seat may have to be moved forward to fully open the lid.

Opened Storage Bin

Seatback Storage

Located in the back of both the driver and passenger front seats are pockets that can be used for storage.

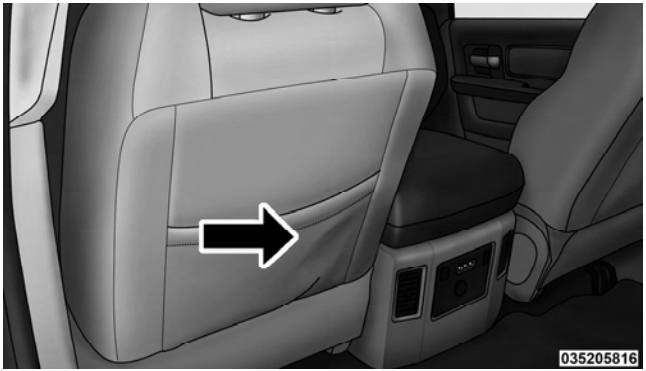

Drivers Side Seatback Storage

Storage (Regular Cab)

The storage bin is located behind the front seats and runs the length of the cab.

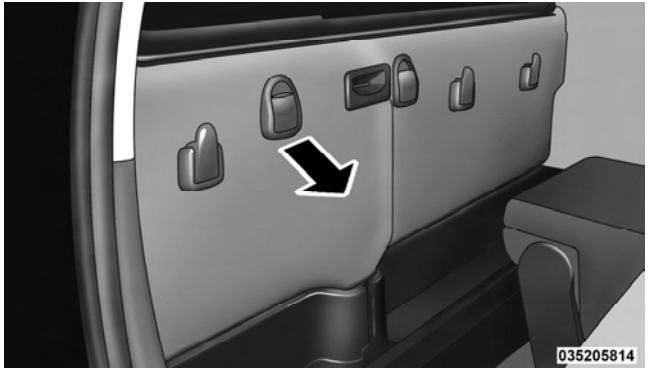

Storage Bin

Storage and Seats (Crew Cab)

The Crew Cab models provide additional storage under the rear seats. Lift the seats to access the storage compartment.

To open the storage compartments, lift upward on the handle of the latch and open the lid.

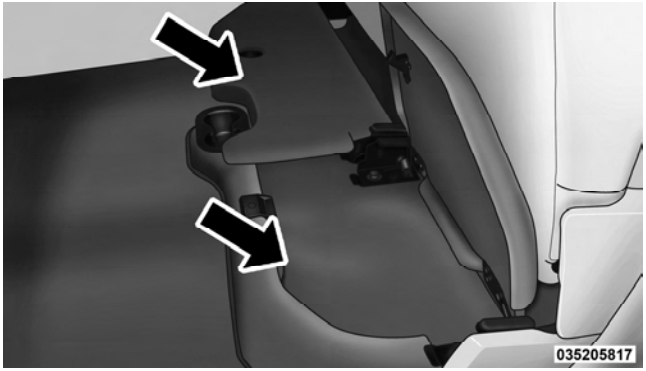

Crew Cab Storage

CAUTION!

Always lift the storage compartment lids by using the handle. Failure to lift the lids by using the handle can result in damage to the lids.

Plastic Grocery Bag Retainers (Regular Cab Models)

Retainer hooks which will hold plastic grocery bag handles are built into the back panel of the cab, behind the rear seat.

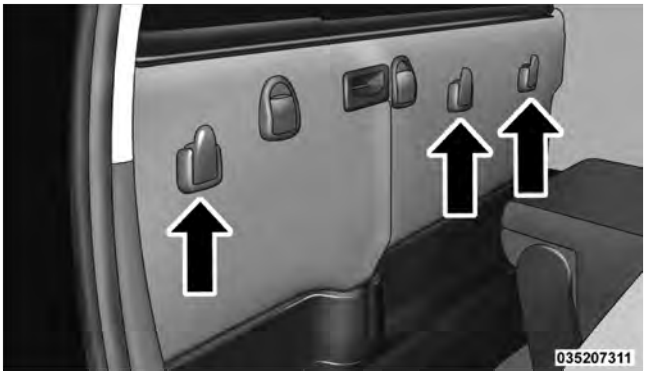

Grocery Bag Hooks

REAR WINDOW FEATURES

Rear Window Defroster

The rear window defroster button is located on the climate control panel. Press this button to turn on the rear window defroster and the heated outside mirrors (if equipped). An indicator in the button will illuminate when the rear window defroster is on. The rear window defroster automatically turns off after approximately 10 minutes. For an additional five minutes of operation, press the button a second time.

NOTE: To prevent excessive battery drain, use the rear window defroster only when the engine is operating.

CAUTION!

Failure to follow these cautions can cause damage to the heating elements:

- **Use care when washing the inside of the rear window. Do not use abrasive window cleaners on the interior surface of the window. Use a soft cloth and a mild washing solution, wiping parallel to the heating elements. Labels can be peeled off after soaking with warm water.**
- **Do not use scrapers, sharp instruments, or abrasive window cleaners on the interior surface of the window.**
- **Keep all objects a safe distance from the window.**

Power Sliding Rear Window — If Equipped

The switch for the power sliding rear window is located on the overhead console.

Rear Window Switch

Push the switch to the right to open the glass. Pull the switch to the left to close the glass.

Manual Sliding Rear Window — If Equipped

A locking device in the center of the window helps to prevent entry from the rear of the vehicle. Squeeze the lock to release the window.

FOLD FLAT LOAD FLOOR — IF EQUIPPED

Quad Cab® and Crew Cab models with a 60/40 rear seat may be equipped with a folding load floor.

WARNING!

Do not operate the vehicle with loose items stored on the load floor. While driving or in an accident you may experience abrupt stopping, rapid acceleration, or sharp turns. Loose objects stored on the load floor may move around with force and strike occupants, resulting in serious or fatal injury.

Unfolding the Load Floor

1. Lift the 60/40 seat cushion(s) to the upward position.

Unfolding The Load Floor

2. Grasp the knob on the load floor and lift the knob until the load floor unfolds into position.

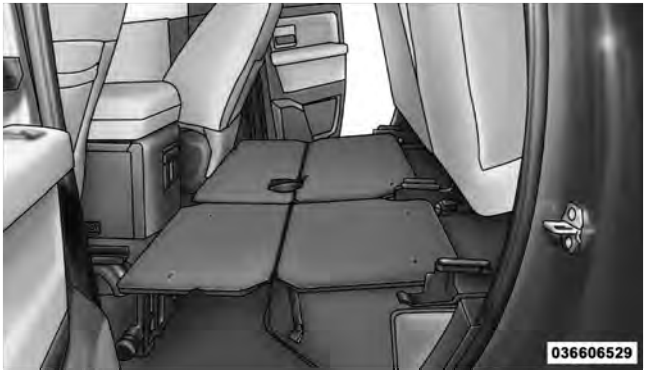

Load Floor In Open Position

3. Reverse the procedure to store the load floor.

Positioning the Load Floor for Storage Access Under the Seat

1. Lift the 60/40 seat cushion(s) to the upward position.

2. Unsnap the securing snap located at either side of the load floor.

3. Lift the load floor up to access storage under the load floor.

WARNING!

Do not drive with the load floor in the up position. When stopping fast or in an accident, the load floor could move to the down position causing serious injury.

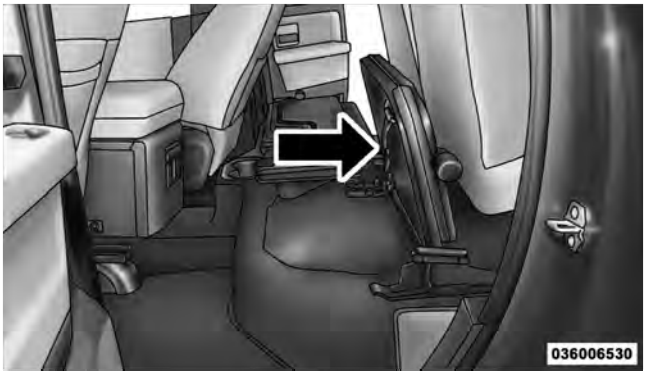

Load Floor Securing Straps

4. Reverse the procedure to put the load floor back in the secured down position before you operate the vehicle.

RAMBOX® — IF EQUIPPED

The RamBox® system is an integrated pickup box storage and cargo management system consisting of three features:

- Integrated box side storage bins
- Cargo extender/divider
- Bed rail tie-down system

RamBox® Integrated Box Side Storage Bins

Cargo storage bins are located on both sides of the pickup box. The cargo storage bins provide watertight, lockable, illuminated storage for up to 150 lbs (68 kg) of evenly distributed cargo.

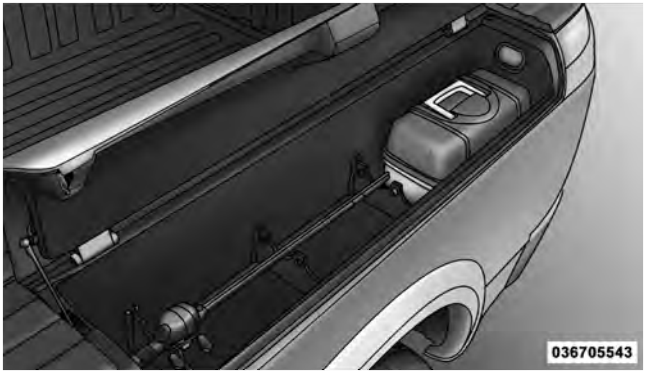

RamBox® Cargo Storage Bins

CAUTION!

Failure to follow the following items could cause damage to the vehicle:

- **Assure that all cargo inside the storage bins is properly secured.**
- **Do not exceed cargo weight rating of 150 lb (68 kg) per bin.**

To open a storage bin, press and release the button located on the lid. The RamBox® lid will open upward to allow hand access. Lift the lid to fully open.

RamBox® Pushbutton And Lock

The interior of the RamBox® will automatically illuminate when the lid is opened. In addition to the automatic illumination switch, there is a manual on/off switch located at the rear of each storage bin. Pushing the switch once will turn off the bin lights, pushing the switch again will turn the lights back on.

RamBox® Light Switch

CAUTION!

Leaving the lid open for extended periods of time could cause the vehicle battery to discharge. If the lid is required to stay open for extended periods of time, it is recommended that the bin lights be turned off manually using the on/off switch.

The RamBox® storage bins can be locked using the vehicle key. To lock the storage bin, insert the key into the keyhole on the pushbutton and turn clockwise to lock.

CAUTION!

- **Ensure cargo bin lids are closed and latched before moving or driving vehicle.**

(Continued)

CAUTION! (Continued)

- **Loads applied to the top of the bin lid should be minimized to prevent damage to the lid and latching/hinging mechanisms.**
- **Damage to the RamBox® bin may occur due to heavy/sharp objects placed in bin that shift due to vehicle motion. In order to minimize potential for damage, secure all cargo to prevent movement and protect inside surfaces of bin from heavy/sharp objects with appropriate padding.**

Cargo bins feature two removable drain plugs (to allow water to drain from bins). To remove plug, pull up on the edge. To install push plug downward into drain hole.

NOTE: Provisions are provided in the bins for cargo dividers and shelf supports. These accessories (in addition to other RamBox® accessories) are available from MOPAR®.

RamBox® Safety Warning

Carefully follow these warnings to help prevent personal injury or damage to your vehicle:

WARNING!

- **Always close the storage bin covers when your vehicle is unattended.**
- **Do not allow children to have access to the storage bins. Once in the storage bin, young children may not be able to escape. If trapped in the storage bin, children can die from suffocation or heat stroke.**
- **In an accident, serious injury could result if the storage bin covers are not properly latched.**
- **Do not drive the vehicle with the storage bin covers open.**
- **Keep the storage bin covers closed and latched while the vehicle is in motion.**
- **Do not use a storage bin latch as a tie down.**

RamBox® Storage Bin Cover Emergency Release Lever — If Equipped

As a security measure, a Storage Bin Cover Emergency Release is built into the storage bin cover latching mechanism.

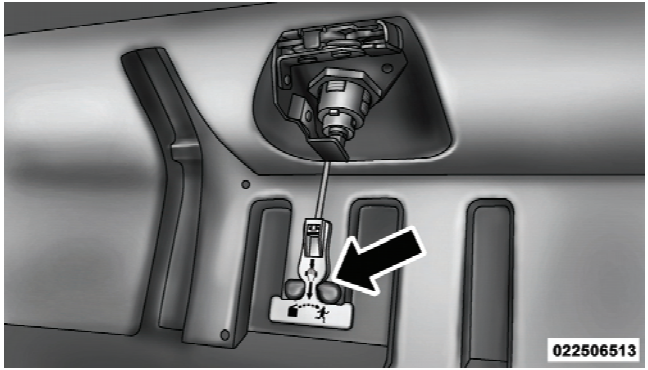

Storage Bin Cover Emergency Release Lever

NOTE: In the event of an individual being locked inside the storage bin, the storage bin cover can be opened from inside of the bin by pulling on the glow-in-the-dark lever attached to the storage bin cover latching mechanism.

Bed Extender — If Equipped

The bed extender has three functional positions:

- Storage Position
- Divider Position
- Extender Position

Storage Position

The storage position for the bed extender is at the front of the truck bed which maximizes the bed cargo area when not in use.

To install the bed extender into the storage position, perform the following:

1. Make sure the center handle is unlocked using the vehicle key and rotate the center handle vertically to release the extender side gates.

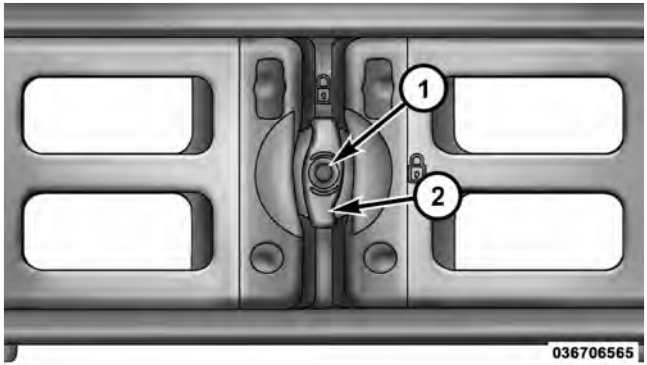

Center Handle And Lock

1 — Center Handle Lock
2 — Handle

2. With the side gates open, position the extender fully forward in the bed against the front panel.

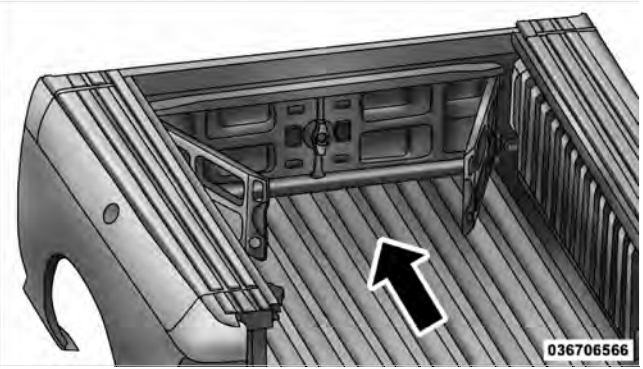

Storage Position

3. Rotate the side gates closed allowing the outboard ends to be positioned in front of the cargo tie down loops.

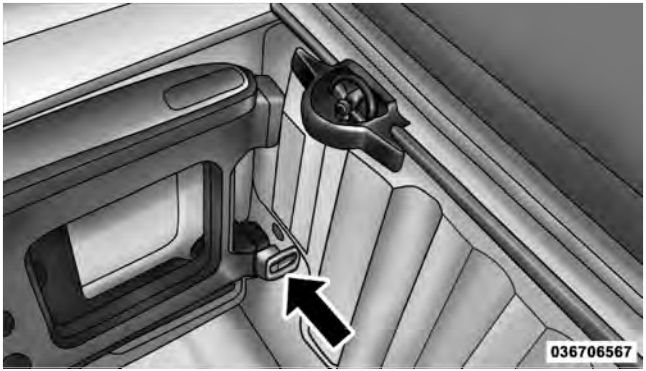

Cargo Tie Down Loop

4. Rotate the center handle horizontally to secure the side gates in the closed position.

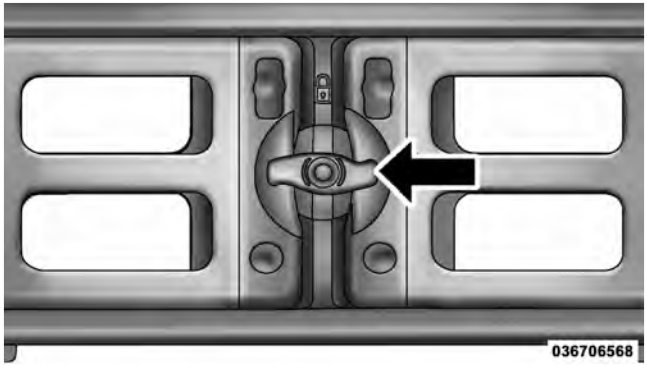

Side Gates Closed

5. Lock the center handle using the vehicle key to secure the panel into place and assist against theft.

Divider Position

The divider position is intended for managing your cargo and assisting in keeping cargo from moving around the bed. There are 11 divider slots along the bed inner panels which allow for various positions to assist in managing your cargo.

To install the bed extender into a divider position perform the following:

1. Make sure the center handle is unlocked using the vehicle key and rotate the center handle vertically to release the extender side gates.

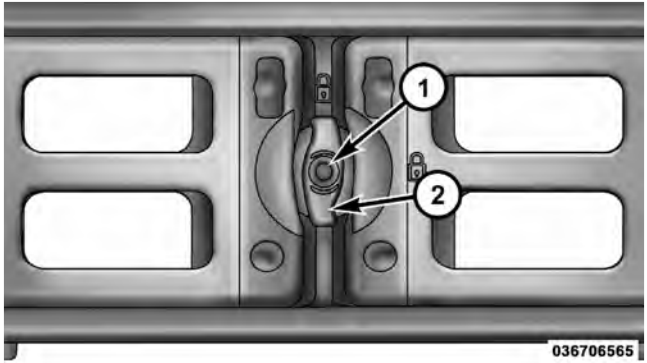

Center Handle And Lock

1 — Center Handle Lock
2 — Handle

2. With the side gates open, position the extender so the outboard ends align with the intended slots in the sides of the bed.

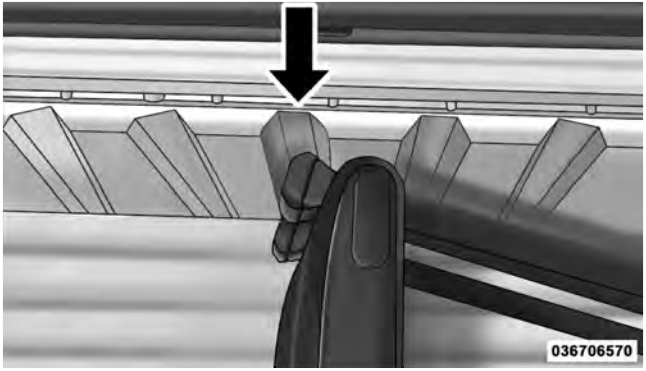

Aligning Gate To Slots

3. Rotate the side gates closed so that the outboard ends are secured into the intended slots of the bed.

4. Rotate the center handle horizontally to secure the side gates in the closed position.

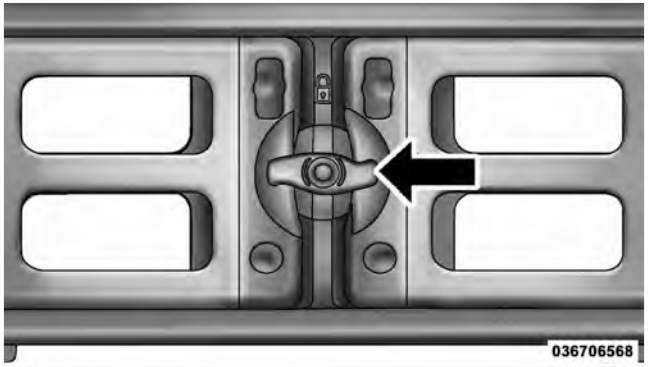

Side Gates Closed

5. Lock the center handle to secure the panel into place and assist against theft.

Extender Position

The extender position allows you to load the bed of the truck beyond the tail gate. The bed extender will add an additional 15 in (38 cm) in the back of the truck when additional cargo room is needed. The extender position utilizes a locating pin and rotating handle located on both sides of the truck bed near the tailgate.

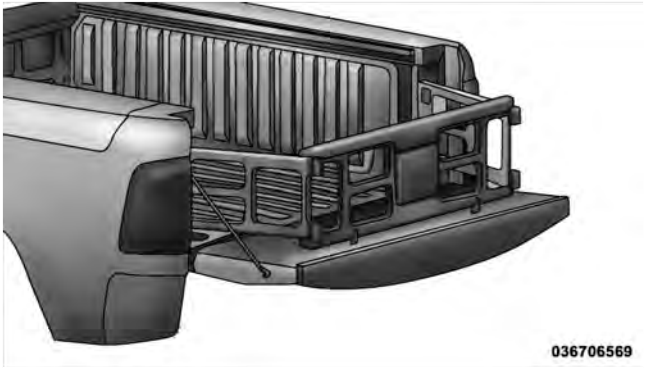

Extender Position

To install the bed extender into the extender position perform the following:

1. Lower the tailgate.

2. Make sure the center handle is unlocked and rotate the center handle vertically in order to release the extender side gates.

3. Fit the end of the side gate ends onto the pin and handle.

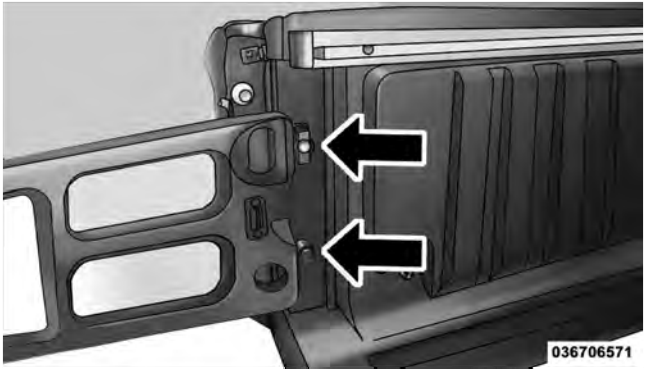

Extender Installation

4. Rotate the handles to the horizontal position to secure into place.

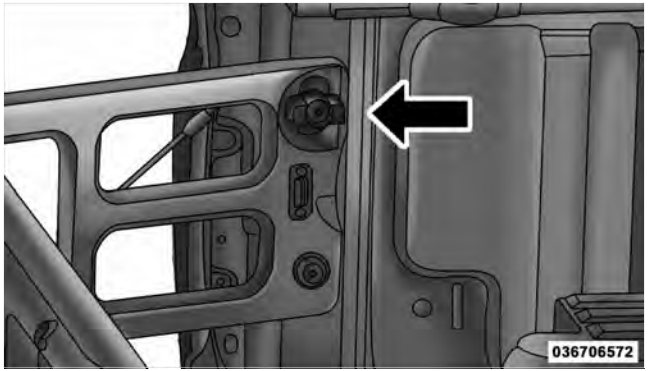

Locking Tab

WARNING!

To reduce the risk of potential injury or property damage:

- **Cargo must be secured.**
- **Do not exceed cargo load rating of your vehicle.**
- **Secure all loads to truck utilizing cargo tie downs.**
- **Extender should not be used as cargo tie down.**
- **When vehicle is in motion do not exceed 150 lbs (68 kg) load on the tailgate.**
- **The bed extender is not intended for off road use.**
- **When not in use, the extender/divider should be in stowed or divider position with the tailgate closed.**
- **When in use all handles are to be in the locked position.**

Bed Rail Tie-Down System

CAUTION!

The maximum load per cleat should not exceed 250 lbs (113 kg) and the angle of the load on each cleat should not exceed 60 degrees above horizontal, or damage to the cleat or cleat rail may occur.

There are two adjustable cleats on each side of the bed that can be used to assist in securing cargo.

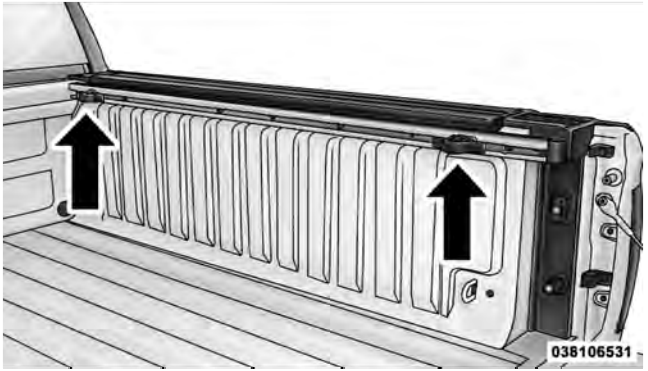

Adjustable Cleats

Each cleat must be located and tightened down in one of the detents, along either rail, in order to keep cargo properly secure.

To move the cleat to any position on the rail, turn the nut counterclockwise, approximately three turns. Then pull

out on the cleat and slide it to the detent nearest the desired location. Make sure the cleat is seated in the detent and tighten the nut.

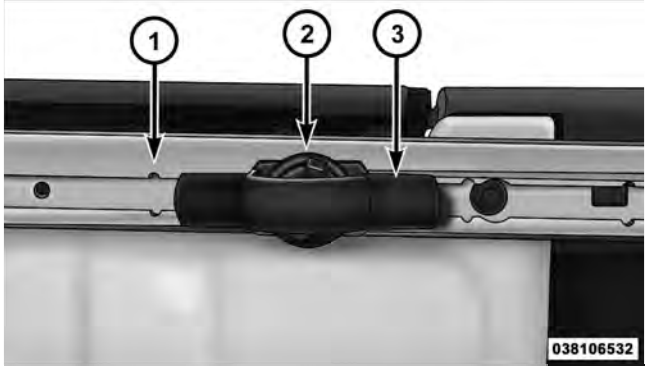

1 — Utility Rail Detent
2 — Cleat Retainer Nut
3 — Utility Rail Cleat

To remove the cleats from the utility rail, remove the end cap by pushing up on the locking tab, located on the bottom of the end cap. Slide the cleat off the end of the rail.

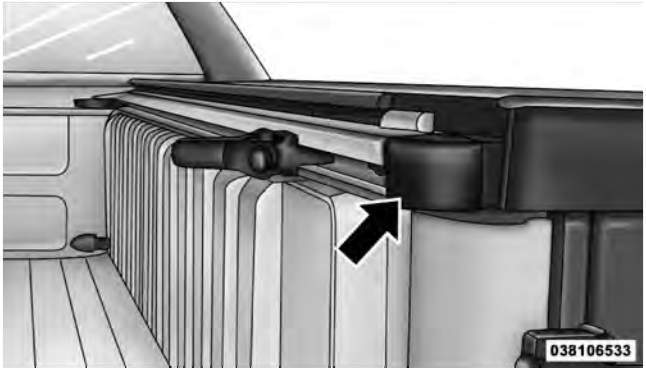

Utility Rail End Cap

SLIDE-IN CAMPERS

Camper Applications

Certain truck models are not recommended for slide-in campers. To determine if your vehicle is excluded, please refer to the "Consumer Information Truck-Camper Loading" document available from your authorized dealer. For safety reasons, follow all instructions in this important document.

NOTE: When a cap or pickup camper is installed on a vehicle, an alternate Center High-Mounted Stop Light (CHMSL) must be provided.

EASY-OFF TAILGATE

To simplify mounting of a camper unit with an overhang, the tailgate can be removed.

NOTE: If your vehicle is equipped with a rear camera the electrical connector must be disconnected prior to removing the tailgate.

Disconnecting the Rear Camera — If Equipped

1. Open the tailgate to access the rear camera connector bracket located on the rear sill.

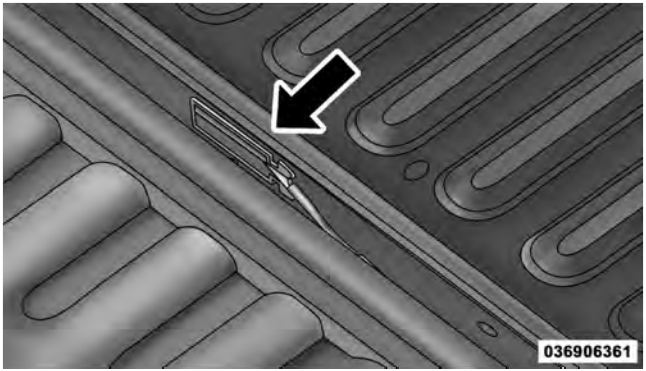

Connector Bracket

2. Remove the connector bracket from the sill by pressing inward in the locking tab.

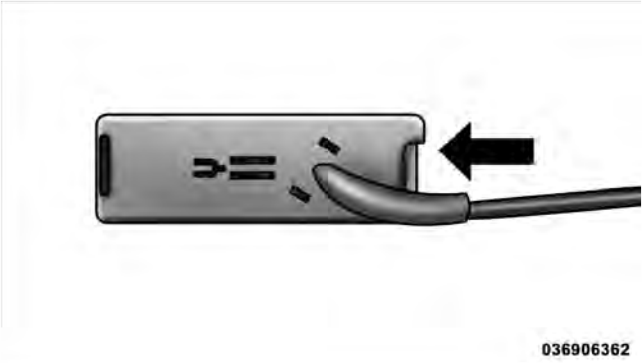

Locking Tab

3. Disconnect the chassis wiring harness, ensuring the connector bracket does not fall into the sill.

4. Connect the chassis plug and bracket (provided in the glove box) to the chassis wiring harness and insert the bracket back into the sill.

5. Connect the tailgate plug (provided in the glove box) to the tailgate wiring harness to ensure that the terminals do not corrode.

6. Tape the tailgate harness and bracket against the forward-facing surface of the tailgate. This will prevent damaging the connector and bracket when storing or reinstalling the tailgate.

Removing The Tailgate

1. Disconnect the wiring harness for the rear camera (if equipped), refer to “Disconnecting the Rear Camera — If Equipped” in this section.

2. Unlatch the tailgate and remove the support cables by releasing the lock tang from the pivot.

NOTE: Make sure tailgate is supported when removing support cables.

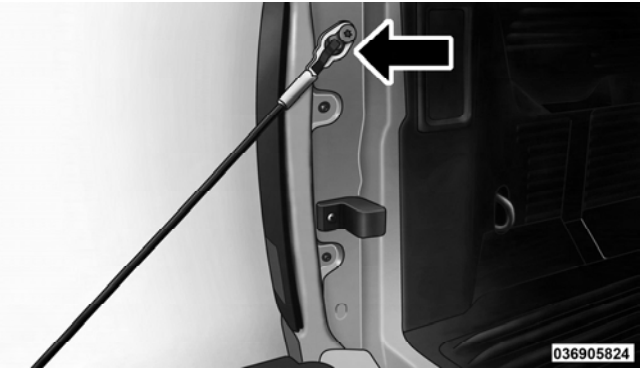

Locking Tang

3. Raise the tailgate to a 45 degree angle.

4. Raise the right side of the tailgate until the right side pivot clears the hanger bracket.

5. Slide the entire tailgate to the right to free the left side pivot.

6. Remove the tailgate from the vehicle.

NOTE: Do not carry the tailgate loose in the truck pickup box.

WARNING!

To avoid inhaling carbon monoxide, which is deadly, the exhaust system on vehicles equipped with "Cap or Slide-In Campers" should extend beyond the overhanging camper compartment and be free of leaks.

Locking Tailgate

The lock is located next to the tailgate handle. The tailgate can be locked using the vehicle key.

UNDERSTANDING YOUR INSTRUMENT PANEL

CONTENTS

- Instrument Panel Features 205
- Switch Bank Button Description 206
  - Upper Switch Bank 206
  - Lower Switch Bank 207
- Instrument Cluster — Base 208
- Instrument Cluster — Premium 209
- Instrument Cluster Descriptions 210
- Electronic Vehicle Information Center (EVIC) — If Equipped 227
  - EVIC Displays 229
  - Fuel Economy / Fuel Saver Mode / Distance To Empty (DTE) — If Equipped 235
  - Trip Functions 237
  - Vehicle Info (Customer Information Features) 238
  - Tire Psi 238
  - Units 239
  - Compass / Temperature Display 240

□ Customer-Programmable Features (System Setup) 242

■ Media Center 730N/430/430N (RHR/RER/RBZ/RHB) CD/DVD/HDD/NAV — If Equipped 249

□ Operating Instructions (Voice Command System) — If Equipped 249

□ Operating Instructions (Uconnect™ Phone) — If Equipped 249

■ Media Center 130 (Sales Code RES) 249

□ Operating Instructions — Radio Mode 250

□ Operation Instructions — CD Mode For CD And MP3 Audio Play 253

□ Notes On Playing MP3 Files 255

□ Operation Instructions - Auxiliary Mode 257

■ Media Center 130 With Satellite Radio (Sales Code RES+RSC) 258

□ Operating Instructions — Radio Mode 258

□ Operation Instructions — CD Mode For CD And MP3 Audio Play 264

□ Notes On Playing MP3 Files 266

□ List Button (CD Mode For MP3 Play) 269

□ Info Button (CD Mode For MP3 Play) 269

□ Uconnect™ Multimedia (Satellite Radio) — If Equipped 270

□ Operating Instructions (Uconnect™ Phone) — If Equipped 274

■ iPod® Control — If Equipped 274

□ Connecting The iPod® 275

□ Using This Feature 276
□ Controlling The iPod® Using Radio Buttons 276
□ Play Mode 276
□ List Or Browse Mode 278
■ iPod®/USB/MP3 Control — If Equipped 280
□ Connecting The iPod® Or External USB Device 280
□ Using This Feature 281
□ Controlling The iPod® Or External USB Device Using Radio Buttons 282
□ Play Mode 282
□ List Or Browse Mode 283
□ Bluetooth Streaming Audio (BTSA) 285
■ Video Entertainment System (VES)™ — If Equipped 286
■ Steering Wheel Audio Controls — If Equipped 288
□ Radio Operation 289
□ CD Player 289
■ CD/DVD Disc Maintenance 290
■ Radio Operation And Mobile Phones 290
■ Climate Controls 290
□ Manual Heating And Air Conditioning System 291
□ Automatic Temperature Control (ATC) — If Equipped 295
□ Summer Operation 300

□ Winter Operation 300
□ Vacation/Storage 301
□ Window Fogging And Frosting 301
□ Outside Air Intake 301
□ Operating Tips 302

INSTRUMENT PANEL FEATURES

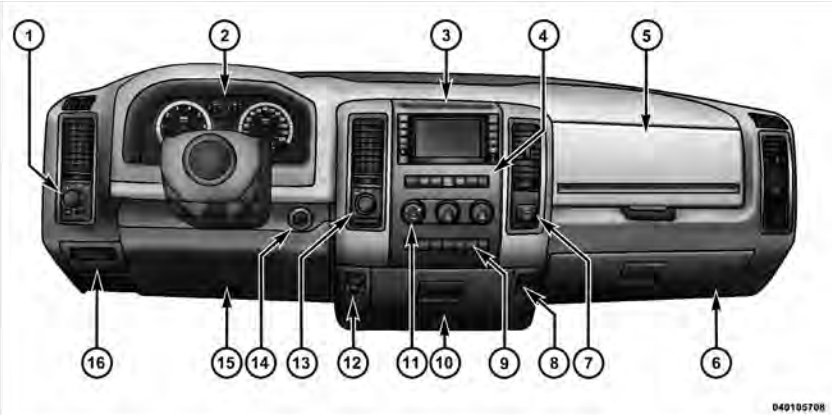

1 — Headlight Switch
2 — Instrument Cluster
3 — Radio
4 — Upper Switch Bank
5 — Upper Glove Compartment
6 — Lower Glove Compartment
7 — 115v Power Inverter Outlet
8 — Power Outlet
9 — Lower Switch Bank
10 — Cup Holders
11 — Climate Controls
12 — Power Outlet/Cigar Lighter
13 — Transfer Case Position Switch
14 — Ignition Switch
15 — Hood Release
16 — Parking Brake Release

SWITCH BANK BUTTON DESCRIPTION

Upper Switch Bank

The upper switch bank is located on the center of the instrument panel.

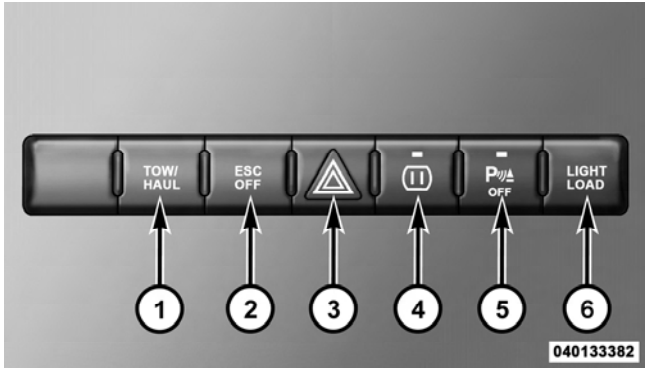

1. TOW/HAUL
Refer to "Starting And Operating" for more information.

2. ESC OFF
Refer to "Starting And Operating" for more information.

3. HAZARD WARNING FLASHER
Refer to "What To Do In Emergencies" for more information.

4. 115V POWER INVERTER
Refer to "Understanding The Features Of Your Vehicle" for more information.

5. REAR PARK ASSIST
Refer to "Understanding The Features Of Your Vehicle" for more information.

6. TPMS LIGHT LOAD — IF EQUIPPED
Refer to "Starting And Operating" for more information.

Lower Switch Bank

The lower switch bank is located on the center of the instrument panel.

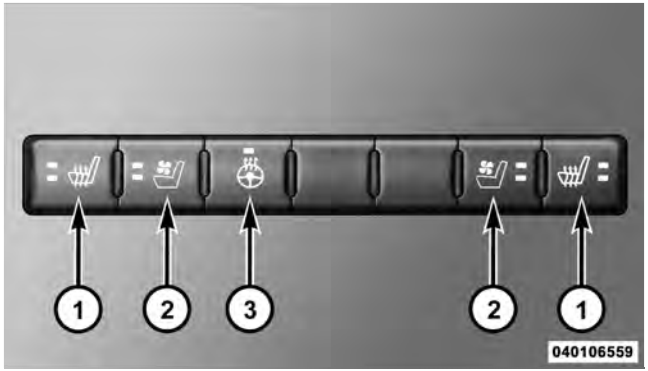

1. HEATED SEATS
Refer to "Understanding The Features Of Your Vehicle" for more information.

2. VENTILATED SEATS
Refer to "Understanding The Features Of Your Vehicle" for more information.

3. HEATED STEERING WHEEL
Refer to "Understanding The Features Of Your Vehicle" for more information.

INSTRUMENT CLUSTER — BASE

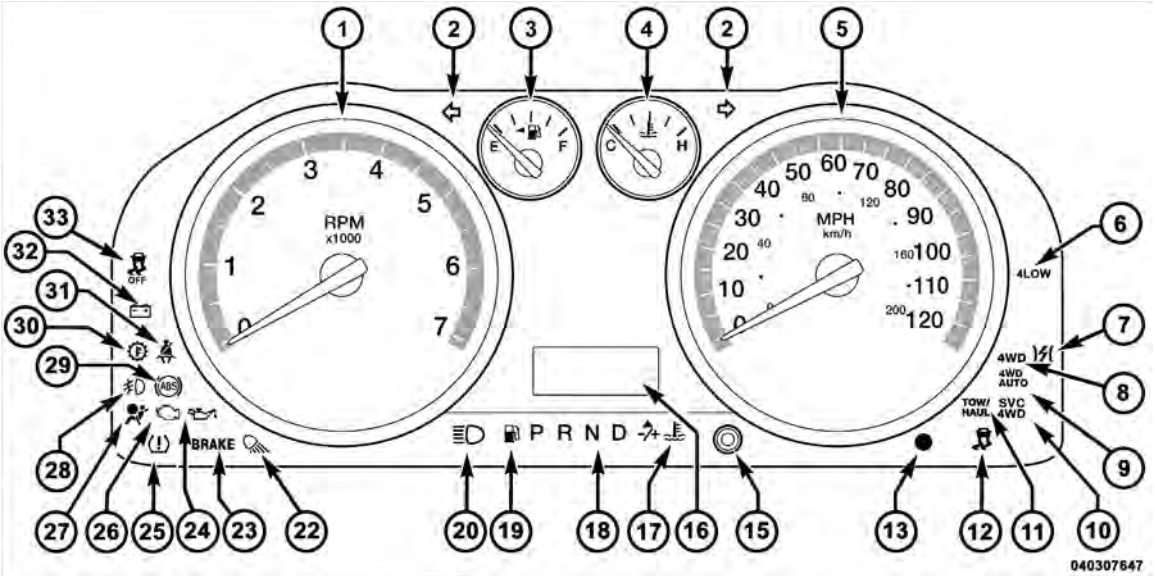

INSTRUMENT CLUSTER — PREMIUM

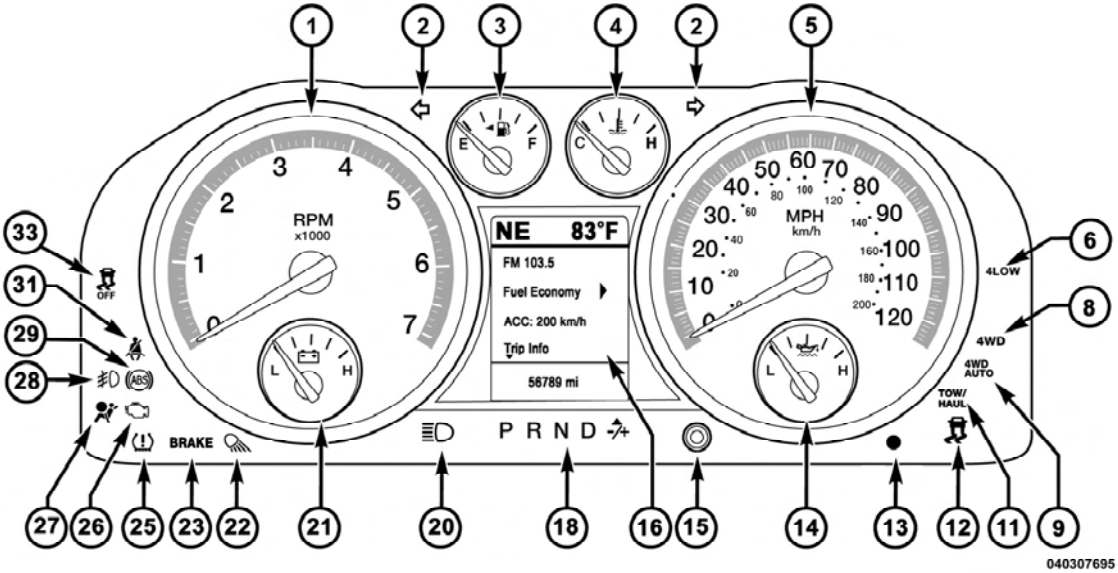

INSTRUMENT CLUSTER DESCRIPTIONS

1. Tachometer

The tachometer indicates engine speed in Revolutions Per Minute (RPM x 1000).

CAUTION!

Do not operate the engine with the tachometer pointer at high RPM for extended periods. Engine damage may occur.

2. Turn Signal Indicators

⇦ The arrow will flash with the exterior turn signal when the turn signal lever is operated.

NOTE:

- A continuous chime will sound if the vehicle is driven more than 1 mile (1.6 km) with either turn signal on.
- Check for an inoperative outside light bulb if either indicator remains on and does not flash, or flashes at a rapid rate.

3. Fuel Gauge

Shows level of fuel in tank when ignition switch is in the ON/RUN position.

4. Temperature Gauge

The temperature gauge shows engine coolant temperature. Any reading within the normal range indicates that the engine cooling system is operating satisfactorily.

The gauge pointer will likely indicate a higher temperature when driving in hot weather, up mountain grades, or when towing a trailer. It should not be allowed to exceed the upper limits of the normal operating range.

CAUTION!

Driving with a hot engine cooling system could damage your vehicle. If the temperature gauge reads "H" pull over and stop the vehicle. Idle the vehicle with the air conditioner turned off until the pointer drops back into the normal range. If the pointer remains on the "H" and you hear continuous chimes, turn the engine off immediately and call an authorized dealership for service.

WARNING!

A hot engine cooling system is dangerous. You or others could be badly burned by steam or boiling coolant. You may want to call an authorized dealership for service if your vehicle overheats. If you decide to look under the hood yourself, see "Maintaining Your Vehicle". Follow the warnings under the Cooling System Pressure Cap paragraph.

5. Speedometer

The speedometer shows the vehicle speed in miles per hour and/or kilometers per hour (mph/km/h).

6. 4 LOW

This light alerts the driver that the vehicle is in the four-wheel drive LOW mode. The front and rear driveshafts are mechanically locked together forcing the front and rear wheels to

rotate at the same speed. Low range provides a greater gear reduction ratio to provide increased torque at the wheels.

For further information on four-wheel drive operation and proper use, refer to “Four-Wheel Drive Operation — If Equipped” in “Starting And Operating”.

7. Electronic Throttle Control (ETC) Light

This light informs you of a problem with the Electronic Throttle Control (ETC) system. The light will come on when the ignition is first turned to ON/RUN and remain on briefly as a bulb check. If the light does not come on during starting, have the system checked by an authorized dealer.

If a problem is detected, the light will come on while the engine is running. Cycle the ignition key when the vehicle has completely stopped and the shift lever is placed in the PARK position, the light should turn off.

If the light remains lit with the engine running, your vehicle will usually be drivable; however, see an authorized dealer for service as soon as possible. If the light is flashing when the engine is running, immediate service is required and you may experience reduced performance, an elevated/rough idle or engine stall and your vehicle may require towing.

For vehicles equipped with a premium cluster this indicator will display in the Electronic Vehicle Information Center (EVIC). Refer to ”Electronic Vehicle Information Center (EVIC) — If Equipped” for further information.

8. 4WD Indicator

This light indicates the vehicle is in four-wheel drive and 4LOCK. 4WD allows all four wheels to receive torque from the engine simultaneously.

9. 4WD Auto Indicator

4WD AUTO

The 4WD auto indicator will be illuminated whenever the four-wheel drive mode is automatically engaged.

10. SVC (Service) 4WD

SVC 4WD

The SVC 4WD light monitors the electric shift four-wheel drive system. If the SVC 4WD light stays on or comes on during driving, it means that the four-wheel drive system is not functioning properly and that service is required.

For vehicles equipped with a premium cluster this indicator will display in the Electronic Vehicle Information Center (EVIC). Refer to "Electronic Vehicle Information Center (EVIC) — If Equipped" for further information.

11. TOW/HAUL

TOW/ HAUL

The TOW HAUL button is located on the center stack upper switch bank. This light will illuminate when TOW HAUL mode is selected.

12. Electronic Stability Control (ESC) Activation/ Malfunction Indicator Light — If Equipped

The "ESC Activation/Malfunction Indicator Light" in the instrument cluster will come on when the ignition switch is turned to the ON/RUN position. It should go out with the engine running. If the "ESC Activation/Malfunction Indicator Light" comes on continuously with the engine running, a malfunction has been detected in the ESC system. If this light remains on after several ignition cycles, and the vehicle has been driven several miles (kilometers) at speeds greater than 30 mph (48 km/h), see your authorized dealer as soon as possible to have the problem diagnosed and corrected.

NOTE:

- The "ESC Off Indicator Light" and the "ESC Activation/Malfunction Indicator Light" come on momentarily each time the ignition switch is turned to ON/RUN.
- Each time the ignition is turned to ON/RUN, the ESC system will be ON, even if it was turned off previously.
- The ESC system will make buzzing or clicking sounds when it is active. This is normal; the sounds will stop when ESC becomes inactive following the maneuver that caused the ESC activation.

13. Vehicle Security Light — If Equipped

This light will flash at a fast rate for approximately 15 seconds, when the vehicle security alarm is arming, and then will flash slowly until the vehicle is disarmed.

14. Oil Pressure Gauge

The pointer should always indicate some oil pressure when the engine is running. A continuous high or low reading under normal driving conditions may indicate a lubrication system malfunction. Immediate service should be obtained from an authorized dealer.

15. Odometer/Trip Odometer Button/ECO (Fuel Saver Indicator) Button — If Equipped

Press this button to toggle between the odometer display, trip odometer display or the "ECO" display. Holding the button in resets the trip odometer reading when in trip mode.

If equipped with Electronic Vehicle Information Center (EVIC) the "ECO" message will be displayed in the EVIC display in the instrument cluster. Refer to "Electronic Vehicle Information Center (EVIC) — If Equipped" for further information.

16. Odometer Display / Electronic Vehicle Information Center (EVIC) Display Area — If Equipped

Odometer Display

The odometer display shows the total distance the vehicle has been driven. U.S. Federal regulations require that upon transfer of vehicle ownership, the seller certify to the purchaser the correct mileage that the vehicle has been driven. If your odometer needs to be repaired or serviced, the repair technician should leave the odometer reading the same as it was before the repair or service. If s/he cannot do so, then the odometer must be set at zero, and a sticker must be placed in the door jamb stating what the mileage was before the repair or service. It is a good idea for you to make a record of the odometer reading before the repair/service, so that you can be sure that it is properly reset, or that the door jamb sticker is accurate if the odometer must be reset at zero.

The two trip odometers show individual trip mileage. To switch from odometer to trip odometers, press and release the TRIP ODOMETER button.

To reset a trip odometer, display the desired trip odometer to be reset then push and hold the button for approximately two seconds until the display resets.

Vehicle Odometer Messages

When the appropriate conditions exist, the following messages will display in the odometer:

ECO . . . . . Fuel Saver Indicator Off
ECO-ON . . . . . Fuel Saver Indicator On
Lo tirE . . . . . Low Tire Pressure
noFUSE . . . . . Fuse Fault
CHAngE OIL . . . . . Oil Change Required
LoWASH . . . . . Low Washer Fluid

NOTE: There is also an engine hour function. This indicates the total number of hours the engine has been running. To display the engine hours on the base cluster,

perform the following: Place the ignition in the ON/RUN, but do not start the engine. With the odometer value displayed, hold the TRIP button down for a period of six seconds. The odometer will change to trip value first, then it will display the engine hour value. The engine hours will be displayed for a period of 30 seconds until the ignition is turned OFF or the engine is started.

If equipped, some of the above warnings will be displayed in the Electronic Vehicle Information Center (EVIC) in the instrument cluster. Refer to "Electronic Vehicle Information Center (EVIC) — If Equipped" for further information.

ECO / ECO-ON (Fuel Saver Indicator) — If Equipped

The ECO-ON indicator will illuminate when you are driving in a fuel efficient manner and can be used to modify driving habits in order to increase fuel economy. The ECO display will toggle between ECO and ECO-ON depending on driving habits and vehicle usage. Press the Odometer / Trip Odometer / ECO (Fuel Saver Indicator) button to change the display from odometer to either of the two trip odometer settings or the "ECO" display.

Loose Gascap Indicator

If the vehicle diagnostic system determines that the fuel filler cap is loose, improperly installed, or damaged, a loose gascap indicator will display in the odometer display area. Tighten the fuel filler cap properly and press the TRIP button to turn off the message. If the problem continues, the message will appear the next time the vehicle is started.

A loose, improperly installed, or damaged fuel filler cap may also turn on the Malfunction Indicator Light (MIL).

Lo tirE

When the appropriate condition exists, the odometer display will toggle between Lo and tirE for three cycles.

noFUSE

If the vehicle diagnostic system determines that the Ignition Off Draw (IOD) fuse is improperly installed, or damaged, a "noFUSE" message will display in the odometer display area. For further information on fuses and fuse locations refer to "Fuses" in "Maintaining Your Vehicle".

CHAngE OIL

Your vehicle is equipped with an engine oil change indicator system. The **CHAngE OIL** message will flash in the instrument cluster odometer for approximately 12 seconds after a single chime has sounded to indicate the next scheduled oil change interval. The engine oil change indicator system is duty cycle-based, which means the engine oil change interval may fluctuate dependent upon your personal driving style.

Unless reset, this message will continue to display each time you turn the ignition switch to the ON/RUN position. To turn off the message temporarily, press and release the Trip Odometer button on the instrument cluster. To reset the oil change indicator system (after performing the scheduled maintenance), refer to the following procedure:

1. Turn the ignition switch to the ON/RUN position **(do not start the engine).**
2. Fully depress the accelerator pedal slowly three times within 10 seconds.
3. Turn the ignition switch to the OFF/LOCK position.

NOTE: If the indicator message illuminates when you start the vehicle, the oil change indicator system did not reset. If necessary, repeat this procedure.

17. Engine Temperature Warning Light

This light warns of an overheated engine condition. As temperatures rise and the gauge approaches **H,** this indicator will illuminate and a

single chime will sound after reaching a set threshold. Further overheating will cause the temperature gauge to pass **H,** the indicator will continuously flash and a continuous chime will occur until the engine is allowed to cool.

If the light turns on while driving, safely pull over and stop the vehicle. If the A/C system is on, turn it off. Also, shift the transmission into NEUTRAL and idle the vehicle. If the temperature reading does not return to normal, turn the engine off immediately and call for service. Refer to "If Your Engine Overheats" in "What To Do In Emergencies" for further information.

For vehicles equipped with a premium cluster this indicator will display in the Electronic Vehicle Information Center (EVIC). Refer to "Electronic Vehicle Information Center (EVIC) — If Equipped" for further information.

18. Shift Lever Indicator

The Shift Lever Indicator is self-contained within the instrument cluster. It displays the gear position of the automatic transmission.

NOTE: In vehicles with 4.7L or 5.7L engines, the highest available transmission gear is displayed in the lower right corner of the Electronic Vehicle Information Center (EVIC) whenever the Electronic Range Select (ERS) feature is active. Use the +/- selector on the shift lever to activate ERS. Refer to "Automatic Transmission" in "Starting And Operating" for further information.

19. Low Fuel Light

When the fuel level reaches approximately 3.0 gal (11.0 L) this light will turn on, and remain on until fuel is added.

For vehicles equipped with a premium cluster this indicator will display in the Electronic Vehicle Information

Center (EVIC). Refer to "Electronic Vehicle Information Center (EVIC) — If Equipped" for further information.

20. High Beam Indicator

This indicator shows that headlights are on high beam. Push the multifunction lever forward to switch the headlights to high beam, and pull toward yourself (normal position) to return to low beam.

21. Voltmeter

When the engine is running, the gauge indicates the electrical system voltage. The pointer should stay within the normal range if the battery is charged. If the pointer moves to either extreme left or right and remains there during normal driving, the electrical system should be serviced.

NOTE: The voltmeter may show a gauge fluctuation at various engine temperatures. This cycling operation is caused by the post-heat cycle of the intake manifold heater system. The number of cycles and the length of the cycling operation is controlled by the engine control module. Post-heat operation can run for several minutes, and then the electrical system and voltmeter needle will stabilize.

22. Cargo Light

The cargo light will illuminate when the cargo light is activated by pressing the cargo light button on the headlight switch.

23. Brake Warning Light

BRAKE

This light monitors various brake functions, including brake fluid level and parking brake application. If the brake light turns on it may indicate that the parking brake is applied, that the brake fluid level is low, or that there is a problem with the Anti-lock Brake System reservoir.

If the light remains on when the parking brake has been disengaged, and the fluid level is at the full mark on the

master cylinder reservoir, it indicates a possible brake hydraulic system malfunction or that a problem with the Brake Booster has been detected by the Anti-Lock Brake System (ABS) / Electronic Stability Control (ESC) system. In this case, the light will remain on until the condition has been corrected. If the problem is related to the brake booster, the ABS pump will run when applying the brake and a brake pedal pulsation may be felt during each stop.

The dual brake system provides a reserve braking capacity in the event of a failure to a portion of the hydraulic system. A leak in either half of the dual brake system is indicated by the Brake Warning Light, which will turn on when the brake fluid level in the master cylinder has dropped below a specified level.

The light will remain on until the cause is corrected.

NOTE: The light may flash momentarily during sharp cornering maneuvers, which change fluid level conditions. The vehicle should have service performed, and the brake fluid level checked.

If brake failure is indicated, immediate repair is necessary.

WARNING!

Driving a vehicle with the red brake light on is dangerous. Part of the brake system may have failed. It will take longer to stop the vehicle. You could have a collision. Have the vehicle checked immediately.

Vehicles equipped with the ABS, are also equipped with Electronic Brake Force Distribution (EBD). In the event of an EBD failure, the Brake Warning Light will turn on along with the ABS Light. Immediate repair to the ABS system is required.

Operation of the Brake Warning Light can be checked by turning the ignition switch from the OFF position to the ON/RUN position. The light should illuminate for approximately two seconds. The light should then turn off unless the parking brake is applied or a brake fault is detected. If the light does not illuminate, have the light inspected by an authorized dealer.

The light also will turn on when the parking brake is applied with the ignition switch in the ON/RUN position.

NOTE: This light shows only that the parking brake is applied. It does not show the degree of brake application.

24. Oil Pressure Warning Light

This light indicates low engine oil pressure. The light should turn on momentarily when the engine is started. If the light turns on while driving, stop the vehicle and shut off the engine as soon as possible. A chime will sound for four minutes when this light turns on. Do not operate the vehicle until the cause is corrected. This light does not indicate how much oil is in the engine. The engine oil level must be checked under the hood.

For vehicles equipped with a premium cluster this indicator will display in the Electronic Vehicle Information Center (EVIC). Refer to "Electronic Vehicle Information Center (EVIC) — If Equipped" for further information.

25. Tire Pressure Monitoring Telltale Light

Each tire, including the spare (if provided), should be checked monthly when cold and inflated to the inflation pressure recommended by the vehicle manufacturer on the vehicle placard or tire inflation pressure label. (If your vehicle has tires of a different size than the size indicated on the vehicle placard or tire inflation pressure label, you should determine the proper tire inflation pressure for those tires.)

As an added safety feature, your vehicle has been equipped with a Tire Pressure Monitoring System (TPMS) that illuminates a low tire pressure telltale when one or more of your tires is significantly under-inflated. Accordingly, when the low tire pressure telltale illuminates, you should stop and check your tires as soon as possible, and inflate them to the proper pressure. Driving on a significantly under-inflated tire causes the tire to overheat and can lead to tire failure. Under-inflation also reduces fuel efficiency and tire tread life, and may affect the vehicle's handling and stopping ability.

Please note that the TPMS is not a substitute for proper tire maintenance, and it is the driver's responsibility to maintain correct tire pressure, even if under-inflation has not reached the level to trigger illumination of the TPMS low tire pressure telltale.

Your vehicle has also been equipped with a TPMS malfunction indicator to indicate when the system is not operating properly. The TPMS malfunction indicator is combined with the low tire pressure telltale. When the system detects a malfunction, the telltale will flash for approximately one minute and then remain continuously illuminated. This sequence will continue upon subsequent vehicle start-ups as long as the malfunction exists. When the malfunction indicator is illuminated, the system may not be able to detect or signal low tire pressure as intended. TPMS malfunctions may occur for a variety of reasons, including the installation of replacement or alternate tires or wheels on the vehicle that prevent the TPMS from functioning properly. Always check the TPMS malfunction telltale after replacing one or more tires or wheels on your vehicle, to ensure that the replacement or alternate tires and wheels allow the TPMS to continue to function properly.

CAUTION!

The TPMS has been optimized for the original equipment tires and wheels. TPMS pressures and warning have been established for the tire size equipped on your vehicle. Undesirable system operation or sensor damage may result when using replacement equipment that is not of the same size, type, and/or style. Aftermarket wheels can cause sensor damage. Do not use tire sealant from a can or balance beads if your vehicle is equipped with a TPMS, as damage to the sensors may result.

NOTE: The TPMS telltale is also accompanied by a "Low Tire" message in the odometer (Base Cluster), or in the Electronic Vehicle Information Center (EVIC) screen indicating "Low Tire" for EVIC enabled clusters.

26. Malfunction Indicator Light (MIL)

The Malfunction Indicator Light (MIL) is part of an onboard diagnostic (OBDII) system which monitors the emissions and engine control system. If the vehicle is ready for emissions testing, the light will come on when the ignition is first turned on and remain on, as a bulb check, until the engine is started. If the vehicle is not ready for emissions testing the light will come on when the ignition is first turned on and remain on for 15 seconds, then blink for 5 seconds, and remain on until the vehicle is started. If the bulb does not come on during starting, have the condition investigated promptly.

If this light comes on and remains on while driving, it suggests a potential engine control problem and the need for system service.

Although your vehicle will usually be drivable and not need towing, see your authorized dealer for service as soon as possible.

CAUTION!

Prolonged driving with the MIL on could cause damage to the engine control system. It also could affect fuel economy and drivability. If the MIL is flashing, severe catalytic converter damage and power loss will soon occur. Immediate service is required.

WARNING!

A malfunctioning catalytic converter, as referenced above, can reach higher temperatures than in normal operating conditions. This can cause a fire if you drive slowly or park over flammable substances such as dry plants, wood, cardboard, etc. This could result in death or serious injury to the driver, occupants or others.

27. Airbag Warning Light

This light will turn on for four to eight seconds as a bulb check when the ignition switch is first turned to ON/RUN. If the light is either not on during starting, stays on, or turns on while driving, have the system inspected at an authorized dealer as soon as possible. Refer to “Occupant Restraints” in “Things To Know Before Starting Your Vehicle” for further information.

28. Front Fog Light Indicator — If Equipped

This indicator will illuminate when the front fog lights are on.

29. Anti-Lock Brake (ABS) Light

This light monitors the Anti-lock Brake System (ABS). The light will turn on when the ignition switch is turned to the ON/RUN position and may stay on for as long as four seconds.

If the ABS light remains on or turns on while driving, it indicates that the anti-lock portion of the brake system is not functioning and that service is required. However, the conventional brake system will continue to operate normally if the BRAKE warning light is not on.

If the ABS light is on, the brake system should be serviced as soon as possible to restore the benefits of anti-lock brakes. If the ABS light does not turn on when the ignition switch is turned to the ON/RUN position, have the light inspected by an authorized dealer.

30. Transmission Temperature Warning Light

This light indicates that there is excessive transmission fluid temperature that might occur with severe usage such as trailer towing. It may also occur when operating the vehicle in a high torque converter slip condition, such as 4-wheel-drive operation (e.g., snow plowing, off-road operation). If this light comes on, stop the vehicle and run the engine at idle or faster with the transmission in NEUTRAL until the light goes off.

CAUTION!

Continuous driving with the Transmission Temperature Warning Light illuminated will eventually cause severe transmission damage or transmission failure.

WARNING!

If the Transmission Temperature Warning Light is illuminated and you continue operating the vehicle, in some circumstances you could cause the fluid to boil over, come in contact with hot engine or exhaust components and cause a fire.

For vehicles equipped with a premium cluster this warning light will display in the Electronic Vehicle Information Center (EVIC). Refer to "Electronic Vehicle Information Center (EVIC) — If Equipped" for further information.

31. Seat Belt Reminder Light

When the ignition switch is first turned to ON/RUN, this light will turn on for four to eight seconds as a bulb check. During the bulb check, if the driver's seat belt is unbuckled, a chime will sound. After the bulb check or when driving, if the driver's seat belt remains unbuckled, the seat belt reminder light will flash or remain on continuously. Refer to "Occupant Restraints" in "Things To Know Before Starting Your Vehicle" for further information.

32. Charging System Light

This light shows the status of the electrical charging system. The light should come on when the ignition switch is first turned to ON/RUN and remain on briefly as a bulb check. If the light stays on or comes on while driving, turn off some of the vehicle's non-essential electrical devices or increase engine speed (if at idle). If the charging system light remains on, it means that the vehicle is experiencing a problem with the charging system. Obtain SERVICE IMMEDIATELY. See an authorized dealer.

If jump starting is required, refer to "Jump Starting Procedures" in "What To Do In Emergencies".

For vehicles equipped with a premium cluster this indicator will display in the Electronic Vehicle Information Center (EVIC). Refer to "Electronic Vehicle Information Center (EVIC) — If Equipped" for further information.

33. Electronic Stability Control (ESC) OFF Indicator Light — If Equipped

This light indicates the Electronic Stability Control (ESC) is off.

ELECTRONIC VEHICLE INFORMATION CENTER (EVIC) — IF EQUIPPED

The Electronic Vehicle Information Center (EVIC) features a driver-interactive display that is located in the instrument cluster.

Electronic Vehicle Information Center (EVIC)

NOTE:

- The compass on your vehicle is self-calibrating, eliminating the need to manually calibrate the compass.
- The EVIC main menu will display Radio Off, AM/FM and SAT radio stations, and AUX/HDD sources at the top of the main menu above Fuel Economy.

This system conveniently allows the driver to select a variety of useful information by pressing the switches mounted on the steering wheel. The EVIC consists of the following:

- System Status display
- Vehicle Information Warning Message Displays
- Customer-Programmable Features (System Setup)
- Compass Display
- Outside Temperature Display
- Trip Computer Functions
- Fuel Economy display
- Average Fuel Economy / Fuel Saver Mode display
- Audio Modes display

Steering wheel EVIC control button, as it appears on the left side of the steering wheel.

△ Press and release the UP button to scroll upward through the main menus (Fuel Economy, Vehicle Info, Tire PSI, Cruise, Messages, Units, System Setup) and sub-menus.

▽ Press and release the DOWN button to scroll downward through the main menus and sub-menus.

Steering wheel EVIC control button, as it appears on the right side of the steering wheel.

Press and release the SELECT button for access to main menus, sub-menus or to select a personal setting in the system setup menu.

Press the BACK button to scroll back to a previous menu or sub-menu.

EVIC Displays

When the appropriate conditions exist, the EVIC displays the following messages:

- Left front turn signal lamp out
- Right front turn signal lamp out
- Left rear turn signal lamp out
- Right rear turn signal lamp out
- Service air filter
- Check Tire Pressure
- Perform service
- ESC Off
- Service Tire Pressure System
- Coolant Low
- Check Trailer Brake Wiring
- Service Trailer Brake System
- Trailer Brake Connected
- Trailer Brake Disconnected

- Lights On
- Keyfob Battery Low
- ECO (Fuel Saver Indicator) — If Equipped
- Door(s) Ajar (with a single chime, if vehicle is in motion)
- Wrong Key
- Damaged Key
- Key not programmed
- Key In Ignition
- Turn Signal On
- RKE Battery Low
- LOW WASHER FLUID
- Oil Change Due > Dealer Info
- Park Assist On
- Park Assist Off
- Warning Object Detected
- Left Front Turn Signal Light Out
- Left Rear Turn Signal Light Out
- Right Front Turn Signal Light Out
- Right Rear Turn Signal Light Out
- Service Park Assist System
- Park Assist System Blinded
- Trailer Brake Disconnected — If Equipped
- Personal Settings Not Available — Vehicle Not in Park
- Remote start aborted — Door ajar
- Remote start aborted — Hood ajar

- Remote start aborted — Fuel low
- Remote start disabled — System fault
- Remote start disabled — Turn key
- Remote start active — Key to Run
- Remote Start Disabled — Start Vehicle to Reset
- Remote Start Active — Insert Key and Turn to RUN
- Memory 1 Profile Set
- Memory 2 Profile Set
- Memory System Unavailable — Not in Park
- Memory System Unavailable — Seatbelt Buckled
- Memory 1 Profile Recall
- Memory 2 Profile Recall
- Adjustable Pedals Unavailable — Vehicle in Reverse
- Adjustable Pedals Unavailable — Cruise Engaged
- To Tow Vehicle Safely, Read Neutral Shift Procedure in Owners Manual

EVIC Warning Lights

- ***Door Ajar***

This light will turn on to indicate that one or more doors may be ajar.

- ***Oil Pressure Warning Light***

This light indicates low engine oil pressure. The light should turn on momentarily when the engine is started. If the light turns on while driving, stop the vehicle and shut off the engine as soon as possible. A chime will sound for four minutes when this light turns on.

Do not operate the vehicle until the cause is corrected. This light does not show how much oil is in the engine. The engine oil level must be checked under the hood.

- *Charging System Light*

This light shows the status of the electrical charging system. The light should come on when the ignition switch is first turned ON and remain on briefly as a bulb check. If the light stays on or comes on while driving, turn off some of the vehicle's non-essential electrical devices or increase engine speed (if at idle). If the charging system light remains on, it means that the vehicle is experiencing a problem with the charging system. Obtain SERVICE IMMEDIATELY. See an authorized dealer.

If jump starting is required, refer to "Jump Starting Procedures" in "What To Do In Emergencies".

- *Electronic Speed Control Light*

This light will turn on when the electronic speed control is ON.

- *Electronic Throttle Control (ETC) Light*

This light informs you of a problem with the Electronic Throttle Control (ETC) system. The light will come on when the ignition is first turned ON and remain on briefly as a bulb check. If the light does not come on during starting, have the system checked by an authorized dealer.

If a problem is detected, the light will come on while the engine is running. Cycle the ignition key when the vehicle has completely stopped and the shift lever is placed in the PARK position. The light should turn off.

If the light remains lit with the engine running, your vehicle will usually be drivable. However, see an authorized dealer for service as soon as possible. If the light is flashing when the engine is running, immediate service is required. You may experience reduced performance, an elevated/rough idle or engine stall and your vehicle may require towing.

- *Engine Temperature Warning Light*

This light warns of an overheated engine condition. As temperatures rise and the gauge approaches **H,** this indicator will illuminate and a single chime will sound after reaching a set threshold. Further overheating will cause the temperature gauge to pass **H,** the indicator will continuously flash and a continuous chime will occur until the engine is allowed to cool.

If the light turns on while driving, safely pull over and stop the vehicle. If the A/C system is on, turn it off. Also, shift the transmission into NEUTRAL and idle the vehicle. If the temperature reading does not return to normal, turn the engine off immediately and call for service. Refer to "If Your Engine Overheats" in "What To Do In Emergencies" for more information.

- *SERV 4WD*

The SERV 4WD light monitors the electric shift 4WD system. If the SERV 4WD light stays on or comes on during driving, it means that the 4WD system is not functioning properly and that service is required.

- *Electronic Stability Control (ESC) OFF Indicator Light — If Equipped*

This light indicates the Electronic Stability Control (ESC) is off.

- *Transmission Temperature Light*

This light indicates that there is excessive transmission fluid temperature that might occur with severe usage such as trailer towing. It may also occur when operating the vehicle in a high torque converter slip condition, such as 4-wheel-drive operation (e.g., snow plowing, off- road operation). If this light comes on, stop the vehicle and run the engine at idle or faster, with the transmission in NEUTRAL until the light goes off.

CAUTION!

Continuous driving with the Transmission Temperature Indicator illuminated will eventually cause severe transmission damage or transmission failure.

WARNING!

If the Transmission Temperature Warning Light is illuminated and you continue operating the vehicle, in some circumstances you could cause the fluid to boil over, come in contact with hot engine or exhaust components and cause a fire.

- *Loose Gascap Indicator*

If the vehicle diagnostic system determines that the fuel filler cap is loose, improperly installed, or damaged, a loose gascap indicator will display in the telltale display area. Tighten the fuel filler cap properly and press the SELECT button to turn off the message. If the problem continues, the message will appear the next time the vehicle is started.

A loose, improperly installed, or damaged fuel filler cap may also turn on the Malfunction Indicator Light (MIL).

Oil Change Due

Your vehicle is equipped with an engine oil change indicator system. The **Oil Change Due** message will flash in the EVIC display for approximately 10 seconds after a single chime has sounded to indicate the next scheduled oil change interval. The engine oil change indicator system is duty-cycle based, which means the engine oil change interval may fluctuate dependent upon your personal driving style.

Unless reset, this message will continue to display each time you turn the ignition switch to the ON position. To turn off the message temporarily, press and release the RETURN button. To reset the oil change indicator system (after performing the scheduled maintenance), perform the following steps.

1. Turn the ignition switch to the ON position. (Do not start the engine)

2. Fully depress the accelerator pedal slowly three times within 10 seconds.

3. Turn the ignition switch to the OFF position.

NOTE: If the indicator message illuminates when you start the engine, the oil change indicator system did not reset. If necessary, repeat these steps.

Fuel Economy / Fuel Saver Mode / Distance To Empty (DTE) — If Equipped

Average Fuel Economy

Shows the average fuel economy since the last reset. When the fuel economy is reset, the display will read “0” or show dashes for two seconds. Then, the history information will be erased, and the averaging will continue from the last fuel average reading before the reset.

Fuel Saver Mode

The FUEL SAVER MODE message will display above the average fuel economy in the EVIC display. This message

will appear whenever the Multi-Displacement System (MDS) (if equipped) allows the engine to operate on four cylinders, or if you are driving in a fuel efficient manner.

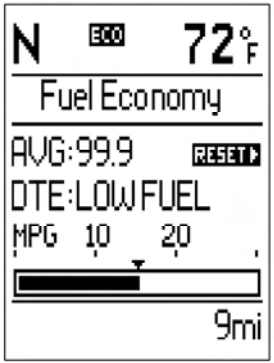

041009379

Fuel Saver Mode — On

This feature allows you to monitor when you are driving in a fuel efficient manner, and it can be used to modify driving habits in order to increase fuel economy.

Distance To Empty (DTE)

Distance To Empty (DTE) Shows the estimated distance that can be traveled with the fuel remaining in the tank. This estimated distance is determined by a weighted average of the instantaneous and average fuel economy, according to the current fuel tank level. DTE cannot be reset through the RETURN button.

NOTE: Significant changes in driving style or vehicle loading will greatly affect the actual drivable distance of the vehicle, regardless of the DTE displayed value.

When the DTE value is less than 10 miles (16 km) estimated driving distance, the DTE display will change to a text display of "LOW FUEL." This display will continue until the vehicle runs out of fuel. Adding a significant amount of fuel to the vehicle will turn off the "LOW FUEL" text and a new DTE value will display.

Trip Functions

Press and release the ODOMETER/TRIP ODOMETER button until one of the following Trip Functions displays in the EVIC:

- Trip A
- Trip B
- Elapsed Time

Press the ODOMETER/TRIP ODOMETER button to cycle through all the Trip Computer functions.

The Trip Functions mode displays the following information:

- ***Trip A***

Shows the total distance traveled for Trip A since the last reset.

- ***Trip B***

Shows the total distance traveled for Trip B since the last reset.

- ***Elapsed Time***

Shows the total elapsed time of travel since the last reset when the ignition switch is in the ACC position. Elapsed time will increment when the ignition switch is in the ON or START position.

To Reset The Display

Reset will only occur while a resettable function is being displayed. Press (for approximately two seconds) and release the ODOMETER/TRIP ODOMETER button once to clear the resettable function being displayed. To reset all resettable functions, press and release the ODOMETER/TRIP ODOMETER button a second time within three seconds of resetting the currently-displayed function. (Reset ALL will display during this three-second window).

Vehicle Info (Customer Information Features)

Press and release the UP or DOWN button until "Vehicle Info" displays in the EVIC and press the SELECT button. Press the UP and DOWN button to scroll through the available information displays, then press SELECT to display any one of the following choices.

- *Coolant Temp*

Displays the actual coolant temperature.

- *Oil Temperature — If Equipped*

Displays the actual oil temperature.

- *Oil Pressure*

Displays the actual oil pressure.

- *Trans Temperature — If Equipped*

Displays the actual transmission temperature.

- *Engine Hours*

Displays the number of hours of engine operation.

- *Trailer Brake — If Equipped*

Displays trailer brake output power and trailer brake status indicator.

Tire PSI

Press and release the UP or DOWN button until "Tire PSI" displays in the EVIC and press the SELECT button. This will display the Tire Pressure Monitor System (shows the current pressure of all four road tires). For additional information, refer to "Tire Pressure Monitor System" in "Starting And Operating".

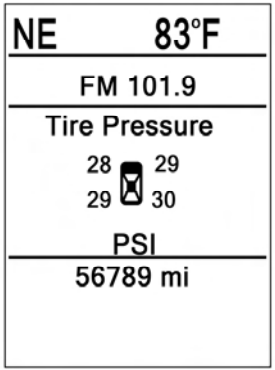

041009895

Tire Pressure Display

NOTE:

- Tires heat up during normal driving conditions. Heat will cause the tire pressure to increase from 2 to 6 psi (14 to 41 kPa) during normal driving conditions. Refer to "Tires-General Information/Tire Inflation Pressures" in "Starting And Operating" for additional information.
- Your system can be set to display pressure units in PSI, kPa, or BAR.

Units

Press and release the UP or DOWN button until "Units" displays in the EVIC and press the SELECT button. The EVIC, odometer, and navigation system (if equipped) can be changed between English and Metric units of measure. To make your selection, scroll up or down until the preferred setting is highlighted, then press and release the SELECT button until a check-mark appears next to the setting, showing that the setting has been selected.

Compass / Temperature Display

The compass readings indicate the direction the vehicle is facing. The EVIC will display one of eight compass readings and the outside temperature.

NOTE:

- The system will display the last known outside temperature when starting the vehicle and may need to be driven several minutes before the updated temperature is displayed. Engine temperature can also affect the displayed temperature; therefore, temperature readings are not updated when the vehicle is not moving.
- During snowplow usage on vehicles equipped with outside temperature display, the display may show higher temperatures than the outside ambient temperature. The higher displayed temperature is due to blocked or reduced airflow to the underhood ambient temperature sensor caused by the snowplow. In addition, on vehicles equipped with Automatic Temperature Control (ATC), it is suggested that the interior cabin temperature be manually controlled should the system not perform as desired while in automatic mode. Both the outside temperature display and ATC operation will return to normal when the snowplow is removed.

Automatic Compass Calibration

This compass is self-calibrating, which eliminates the need to manually reset the compass. When the vehicle is new, the compass may appear erratic and the EVIC will display CAL until the compass is calibrated. You may also calibrate the compass by completing one or more 360–degree turns (in an area free from large metal or metallic objects) until the CAL indicator displayed in the EVIC turns off. The compass will now function normally.

NOTE: A good calibration requires a level surface and an environment free from large metallic objects such as buildings, bridges, underground cables, railroad tracks, etc.

Manual Compass Calibration

If the compass appears erratic and the CAL indicator does not appear in the EVIC display, you must put the compass into the Calibration Mode manually, as follows:

1. Turn ON the ignition switch.

2. Press the UP or DOWN button until the System Setup (Customer-Programmable Features) menu is reached, then press the SELECT button.

3. Press the DOWN button until “Calibrate Compass” is displayed in the EVIC.

4. Press and release the SELECT button to start the calibration. The “CAL” indicator will be displayed in the EVIC.

5. Complete one or more 360–degree turns (in an area free from large metal or metallic objects) until the “CAL” indicator turns off. The compass will now function normally.

Compass Variance

Compass Variance is the difference between Magnetic North and Geographic North. To compensate for the differences the variance should be set for the zone where the vehicle is driven, per the zone map. Once properly set, the compass will automatically compensate for the differences, and provide the most accurate compass heading. For the most accurate compass performance, the compass must be set using the following steps.

NOTE: Keep magnetic materials away from the top of the instrument panel, such as iPod’s, Mobile Phones,

Laptops and Radar Detectors. This is where the compass module is located, and it can cause interference with the compass sensor, and it may give false readings.

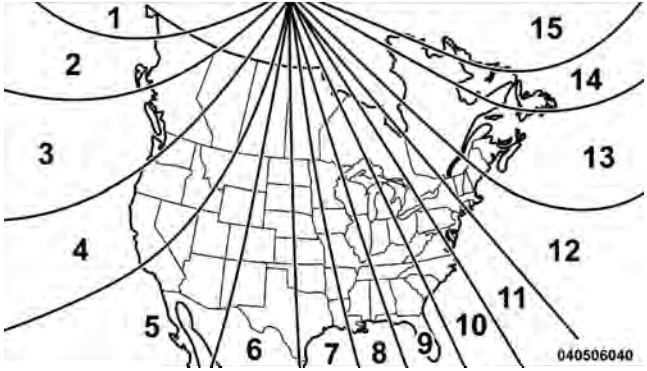

Compass Variance Map

1. Turn the ignition switch ON.

2. Press the UP or DOWN button until the System Setup (Customer-Programmable Features) menu is reached, then press the SELECT button.

3. Press the DOWN button until the "Compass Variance" message is displayed in the EVIC, then press the SELECT button. The last variance zone number displays in the EVIC.

4. Press and release the SELECT button until the proper variance zone is selected, according to the map.

5. Press and release the BACK button to exit.

Customer-Programmable Features (System Setup)

Personal Settings allows you to set and recall features when the transmission is in PARK. If the transmission is out of PARK or the vehicle begins moving, a warning message **SYSTEM SETUP NOT AVAILABLE,** is followed in three seconds by, **VEHICLE NOT IN PARK.**

Press and release the UP or DOWN button until System Setup displays in the EVIC.

Use the UP or DOWN button to display one of the following choices.

Select Language
When in this display you may select one of five languages for all display nomenclature, including the trip functions and the navigation system (if equipped). Press the UP or DOWN button while in this display and scroll through the language choices. Press the SELECT button to select English, Spanish (Español), French (Français), Italian (Italiano), German (Deutsch), and Dutch (Nederlands). Then, as you continue, the information will display in the selected language.

Nav–Turn By Turn
When this feature is selected, the navigation system utilizes voice commands, guiding through the drive route, mile by mile, turn-by-turn until the final destination is reached. To make your selection, press and release the SELECT button until a check-mark appears next to the feature showing the system has been activated or the check-mark is removed showing the system has been deactivated.

Park Assist System
The Rear Park Assist system will scan for objects behind the vehicle when the transmission is in the REVERSE position and the vehicle speed is less than 11 mph (18 km/h). The system can be enabled with Sound Only, Sound and Display, or turned OFF through the EVIC. To make your selection, scroll up or down until the preferred setting is highlighted, then press and release the SELECT button until a check-mark appears next to the setting, showing that the setting has been selected. Refer to “Rear Park Assist System” in “Understanding The Features Of Your Vehicle” for system function and operating information.

Auto Lock Doors

When this feature is selected, all doors will lock automatically when the vehicle reaches a speed of 15 mph (24 km/h). To make your selection, press and release the SELECT button until a check-mark appears next to the feature showing the system has been activated, or the check-mark is removed showing the system has been deactivated.

Auto Unlock Doors

When this feature is selected, all doors will unlock when the vehicle is stopped and the transmission is in the PARK or NEUTRAL position and the driver's door is opened. To make your selection, press and release the SELECT button until a check-mark appears next to the feature showing the system has been activated, or the check-mark is removed showing the system has been deactivated.

Remote Unlock Sequence

When **Unlock Driver Door Only On 1st Press** is selected, only the driver's door will unlock on the first press of the RKE transmitter UNLOCK button. When Driver Door 1st Press is selected, you must press the RKE transmitter UNLOCK button twice to unlock the passenger's doors. When **Unlock All Doors On 1st Press** is selected, all of the doors will unlock on the first press of the RKE transmitter UNLOCK button. To make your selection, scroll up or down until the preferred setting is highlighted, then press and release the SELECT button until a check-mark appears next to the setting, showing that the setting has been selected.

RKE Linked To Memory

When this feature is selected the memory seat, mirror, and radio settings will return to the memory set position when the RKE transmitter UNLOCK button is pressed. If this feature is not selected then the memory seat, mirror, and radio settings can only return to the memory set

position using the seat mounted switch. To make your selection, press and release the SELECT button until a check-mark appears next to the feature showing the system has been activated or the check-mark is removed showing the system has been deactivated.

Remote Start Comfort Sys.

When this feature is selected and the remote start is activated, the heated steering wheel and driver heated seat features will automatically turn on in cold weather. In warm weather, the driver vented seat feature will automatically turn on when the remote start is activated. These features will stay on through the duration of remote start or until the key is turned to RUN. To make your selection, press and release the SELECT button until a check-mark appears next to the feature showing the system has been activated or the check-mark is removed showing the system has been deactivated.

Horn With Remote Start

When this feature is selected, a short horn sound will occur when the RKE transmitter REMOTE START button is pressed. To make your selection, press and release the SELECT button until a check-mark appears next to the feature showing the system has been activated or the check-mark is removed showing the system has been deactivated.

Horn With Remote Lock

When this feature is selected, a short horn sound will occur when the RKE transmitter LOCK button is pressed. This feature may be selected with or without the Flash Lamps with Lock feature. To make your selection, press and release the SELECT button until a check-mark appears next to the feature showing the system has been activated or the check-mark is removed showing the system has been deactivated.

Flash Lamps With Lock

When this feature is selected, the front and rear turn signals will flash when the doors are locked or unlocked with the RKE transmitter. This feature may be selected with or without the sound horn on lock feature selected. To make your selection, press and release the SELECT button until a check-mark appears next to the feature showing the system has been activated or the check-mark is removed showing the system has been deactivated.

Headlamp Off Delay

When this feature is selected, the driver can choose to have the headlights remain on for 0, 30, 60, or 90 seconds when exiting the vehicle. To make your selection, scroll up or down until the preferred setting is highlighted, then press and release the SELECT button until a check-mark appears next to the setting, showing that the setting has been selected.

Headlamps With Wipers

When this feature is selected and the HEADLIGHT switch is in the AUTO position, the headlights will turn on approximately 10 seconds after the wipers are turned on. The headlights will also turn off when the wipers are turned off if they were turned on by this feature. To make your selection, press and release the SELECT button until a check-mark appears next to the feature showing the system has been activated or the check-mark is removed showing the system has been deactivated.

Wiper Mode — If Equipped

When this feature is selected, the system will automatically activate the windshield wipers if it senses moisture on the windshield. To make your selection, press and release the SELECT button until a check-mark appears next to the feature showing the system has been activated or the check-mark is removed showing the system has

been deactivated. When this feature is deactivated, the system reverts to the standard intermittent wiper operation.

Easy Exit Seat — If Equipped

When this feature is selected it provides automatic driver seat positioning to enhance driver mobility when entering and exiting the vehicle. To make your selection, press and release the SELECT button until a check-mark appears next to the feature showing the system has been activated or the check-mark is removed showing the system has been deactivated.

NOTE: The seat will return to the memorized seat location (if Recall Memory with Remote Key Unlock is set to ON) when the RKE transmitter is used to unlock the door. Refer to "Driver Memory Seat" in "Understanding The Features Of Your Vehicle" for further information.

Tilt Mirror In Reverse

When this feature is selected and the shift lever is placed in reverse gear, the side mirrors tilt downward to allow the driver to see into the previous blind spot and avoid objects in close proximity to the rear of the vehicle. To make your selection, press and release the SELECT button until a check-mark appears next to the feature showing the system has been activated or the check-mark is removed showing the system has been deactivated.

Key-Off Power Delay

When this feature is selected, the power window switches, radio, hands-free system (if equipped), DVD video system (if equipped), power sunroof (if equipped), and power outlets will remain active for up to 10 minutes after the ignition switch is turned OFF. Opening either front vehicle door will cancel this feature. To make your selection, scroll up or down until the preferred setting is

highlighted, then press and release the SELECT button until a check-mark appears next to the setting, showing that the setting has been selected.

Illuminated Approach
When this feature is selected, the headlights will activate and remain on for 0, 30, 60, or 90 seconds when the doors are unlocked with the RKE transmitter. To make your selection, scroll up or down until the preferred setting is highlighted, then press and release the SELECT button until a check-mark appears next to the setting, showing that the setting has been selected.

Hill Start Assist (HSA)
When on is selected, the HSA system is active. Refer to "Electronic Brake Control System" in "Starting And Operating" for system function and operating information. To make your selection, press and release the SELECT button until a check-mark appears next to the feature showing the system has been activated or the check-mark is removed showing the system has been deactivated.

Display Fuel Saver — If Equipped
The "Fuel Saver Mode" message is located in the Compass/Temperature display; this message can be turned on or off. To make your selection, press and release the SELECT button until a check-mark appears next to the feature showing the system has been activated or the check-mark is removed showing the system has been deactivated.

Compass Variance
Refer to "Compass Display" for more information.

Calibrate Compass
Refer to "Compass Display" for more information.

MEDIA CENTER 730N/430/430N (RHR/RER/RBZ/RHB) CD/DVD/HDD/NAV — IF EQUIPPED

NOTE: The sales code is located on the lower right side of the unit's faceplate.

Refer to your Uconnect™ Multimedia RHR, RER, RBZ or RHB user's manual for detailed operating instructions.

Operating Instructions (Voice Command System) — If Equipped

Refer to "Voice Command" in the Uconnect™ User Manual located on the DVD for further details.

Operating Instructions (Uconnect™ Phone) — If Equipped

Refer to "Uconnect™ Phone" in the Uconnect™ User Manual located on the DVD for further details.

MEDIA CENTER 130 (SALES CODE RES)

NOTE: The radio sales code is located on the lower right side of the radio faceplate.

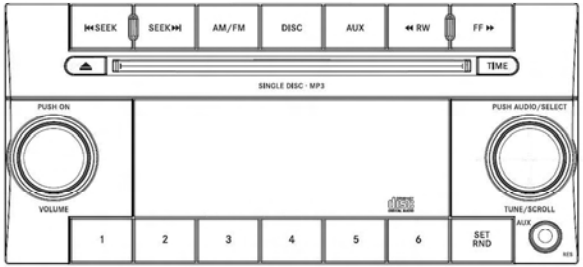

042305232

Media Center 130 (RES)

Operating Instructions — Radio Mode

NOTE: The ignition switch must be in the ON or ACC position to operate the radio.

Power Switch/Volume Control (Rotary)
Push the ON/VOLUME control knob to turn on the radio. Push the ON/VOLUME control knob a second time to turn off the radio.

Electronic Volume Control
The electronic volume control turns continuously (360 degrees) in either direction, without stopping. Turning the ON/VOLUME control knob to the right increases the volume, and to the left decreases it.

When the audio system is turned on, the sound will be set at the same volume level as last played.

SEEK Buttons
Press and release the SEEK buttons to search for the next listenable station in AM/FM mode. Press the right switch to seek up and the left switch to seek down. The radio will remain tuned to the new station until you make another selection. Holding either button will bypass stations without stopping, until you release it.

TIME Button
Press the TIME button to alternate display of the time and radio frequency.

Clock Setting Procedure

1. Press and hold the TIME button until the hours blink.

2. Adjust the hours by turning the right side TUNE/SCROLL control knob.

3. After adjusting the hours, press the right side TUNE/SCROLL control knob to set the minutes. The minutes will begin to blink.

4. Adjust the minutes using the right side TUNE/SCROLL control knob. Press the TUNE/SCROLL control knob to save time change.

5. To exit, press any button/knob, or wait five seconds.

RW/FF
Pressing the RW (Rewind) or FF (Fast Forward) buttons causes the tuner to search for the next frequency in the direction of the arrows. This feature operates in either AM or FM frequencies.

TUNE Control
Turn the rotary TUNE/SCROLL control knob clockwise to increase or counterclockwise to decrease the frequency.

Setting the Tone, Balance, and Fade
Push the rotary TUNE/SCROLL control knob and BASS will display. Turn the TUNE/SCROLL control knob to the right or left to increase or decrease the bass tones.

Push the rotary TUNE/SCROLL control knob a second time and MID will display. Turn the TUNE/SCROLL control knob to the right or left to increase or decrease the mid-range tones.

Push the rotary TUNE/SCROLL control knob a third time and TREBLE will display. Turn the TUNE/SCROLL control knob to the right or left to increase or decrease the treble tones.

Push the rotary TUNE/SCROLL control knob a fourth time and BALANCE will display. Turn the TUNE/SCROLL control knob to the right or left to adjust the sound level from the right or left side speakers.

Push the rotary TUNE/SCROLL control knob a fifth time and FADE will display. Turn the TUNE/SCROLL control knob to the left or right to adjust the sound level between the front and rear speakers.

Push the rotary TUNE/SCROLL control knob again to exit setting tone, balance, and fade.

AM/FM Button
Press the buttons to select either AM or FM mode.

SET/RND Button — To Set the Pushbutton Memory
When you are receiving a station that you wish to commit to pushbutton memory, press the SET/RND button. The symbol SET 1 will now show in the display window. Select the button (1 to 6) you wish to lock onto this station and press and release that button. If a button is not selected within five seconds after pressing the SET/RND button, the station will continue to play but will not be stored into pushbutton memory.

You may add a second station to each pushbutton by repeating the above procedure with this exception: Press the SET/RND button twice and SET 2 will show in the display window. Each button can be set for SET 1 and SET 2 in both AM and FM. This allows a total of 12 AM and 12 FM stations to be stored into pushbutton memory. The stations stored in SET 2 memory can be selected by pressing the pushbutton twice.

Every time a preset button is used, a corresponding button number will display.

Buttons 1 - 6
These buttons tune the radio to the stations that you commit to pushbutton memory (12 AM and 12 FM stations).

DISC Button
Pressing the DISC button will allow you to switch from AM/FM modes to Disc modes.

Operation Instructions — CD MODE For CD And MP3 Audio Play

NOTE:

- The ignition switch must be in the ON or ACC position to operate the radio.
- This radio is capable of playing compact discs (CD), recordable compact discs (CD-R), rewritable compact discs (CD-RW), compact discs with MP3 tracks and multisession compact discs with CD and MP3 tracks.

Inserting Compact Disc(s)

Gently insert one CD into the CD player with the CD label facing up. The CD will automatically be pulled into the CD player and the CD icon will illuminate on the radio display. If a CD does not go into the slot more than 1.0 in (2.5 cm), a disc may already be loaded and must be ejected before a new disc can be loaded.

If you insert a disc with the ignition ON and the radio ON, the unit will switch from radio to CD mode and begin to play when you insert the disc. The display will show the track number, and index time in minutes and seconds. Play will begin at the start of track 1.

CAUTION!

- **This CD player will accept 4-3/4 in (12 cm) discs only. The use of other sized discs may damage the CD player mechanism.**
- **Do not use adhesive labels. These labels can peel away and jam the player mechanism.**
- **RES is a single CD player. Do not attempt to insert a second CD if one is already loaded.**
- **Dual-media disc types (one side is a DVD, the other side is a CD) should not be used, and they can cause damage to the player.**

EJECT Button - Ejecting a CD

Press the EJECT button to eject the CD.

If you have ejected a disc and have not removed it within 10 seconds, it will be reloaded. If the CD is not removed, the radio will reinsert the CD but will not play it.

A disc can be ejected with the radio and ignition OFF.

NOTE: Ejecting with the ignition OFF is not allowed on convertible or soft-top models (if equipped).

SEEK Button

Press the right SEEK button for the next selection on the CD. Press the left SEEK button to return to the beginning of the current selection, or return to the beginning of the previous selection if the CD is within the first second of the current selection. Pressing and holding the SEEK button will allow faster scrolling through the tracks in CD and MP3 modes.

TIME Button

Press this button to change the display from a large CD playing time display to a small CD playing time display.

RW/FF

Press and hold the FF (Fast Forward) button and the CD player will begin to fast forward until FF is released, or RW or another CD button is pressed. The RW (Reverse) button works in a similar manner.

AM/FM Button

Press the button to select either AM or FM mode.

SET/RND Button (Random Play Button)
Press this button while the CD is playing to activate Random Play. This feature plays the selections on the compact disc in random order to provide an interesting change of pace.

Press the right SEEK button to move to the next randomly selected track.

Press the RND button a second time to stop Random Play.

Notes on Playing MP3 Files

The radio can play MP3 files; however, acceptable MP3 file recording media and formats are limited. When writing MP3 files, pay attention to the following restrictions.

Supported Media (Disc Types)
The MP3 file recording media supported by the radio are CDDA, CD-R, CD-RW, MP3, and CDDA+MP3.

Supported Medium Formats (File Systems)
The medium formats supported by the radio are ISO 9660 Level 1 and Level 2 and includes the Joliet extension. When reading discs recorded using formats other than ISO 9660 Level 1 and Level 2, the radio may fail to read files properly and may be unable to play the file normally. UDF and Apple HFS formats are not supported.

The radio uses the following limits for file systems:

- Maximum number of folder levels: 8
- Maximum number of files: 255
- Maximum number of folders. (The radio display of file names and folder names is limited. For large numbers of files and/or folders, the radio may be unable to display the file name and folder name, and will assign a number instead. With a maximum number of files, exceeding 20 folders will result in this display. With 200 files, exceeding 50 folders will result in this display.)

- Maximum number of characters in file/folder names:
  - Level 1: 12 (including a separator "." and a three-character extension)
  - Level 2: 31 (including a separator "." and a three-character extension)

Multisession disc formats are supported by the radio. Multisession discs may contain combinations of normal CD audio tracks and computer files (including MP3 files). Discs created with an option such as "keep disc open after writing" are most likely multisession discs. The use of multisession for CD audio or MP3 playback may result in longer disc loading times.

Supported MP3 File Formats

The radio will recognize only files with the *.MP3 extension as MP3 files. Non-MP3 files named with the *.MP3 extension may cause playback problems. The radio is designed to recognize the file as an invalid MP3 and will not play the file.

When using the MP3 encoder to compress audio data to an MP3 file, the bit rate and sampling frequencies in the following table are supported. In addition, variable bit rates (VBR) are also supported. The majority of MP3 files use a 44.1 kHz sampling rate and a 192, 160, 128, 96 or VBR bit rate.

MPEG Specification	Sampling Frequency (kHz)	Bit Rate (kbps)
MPEG-1 Audio Layer 3	48, 44.1, 32	320, 256, 224, 192, 160, 128, 112, 96, 80, 64, 56, 48, 40, 32
MPEG-2 Audio Layer 3	24, 22.05, 16	160, 128, 144, 112, 96, 80, 64, 56, 48, 40, 32, 24, 16, 8

ID3 Tag information for artist, song title, and album title are supported for version 1 ID3 tags. ID3 version 2 is not supported by the radios.

Playlist files are not supported. MP3 Pro files are not supported.

Playback of MP3 Files

When a medium containing MP3 data is loaded, the radio checks all files on the medium. If the medium contains a lot of folders or files, the radio will take more time to start playing the MP3 files.

Loading times for playback of MP3 files may be affected by the following:

- Media - CD-RW media may take longer to load than CD-R media
- Medium formats - Multisession discs may take longer to load than non-multisession discs
- Number of files and folders - Loading times will increase with more files and folders

To increase the speed of disc loading, it is recommended to use CD-R media and single-session discs. To create a single-session disc, enable the "Disc at Once" option before writing to the disc.

Operation Instructions - Auxiliary Mode

The auxiliary (AUX) jack is an audio input jack, which allows the user to plug in a portable device, such as an MP3 player, or cassette player, and utilize the vehicle's audio system to amplify the source and play through the vehicle speakers.

Pressing the DISC/AUX button will change the mode to auxiliary device if the AUX jack is connected.

NOTE: The AUX device must be turned on and the device's volume set to proper level. If the AUX audio is not loud enough, turn the device's volume up. If the AUX audio sounds distorted, turn the device's volume down.

TIME Button (Auxiliary Mode)
Press this button to change the display to time of day. The time of day will display for five seconds (when ignition is OFF).

MEDIA CENTER 130 WITH SATELLITE RADIO (SALES CODE RES+RSC)

NOTE: The radio sales code is located on the lower right side of the radio faceplate.

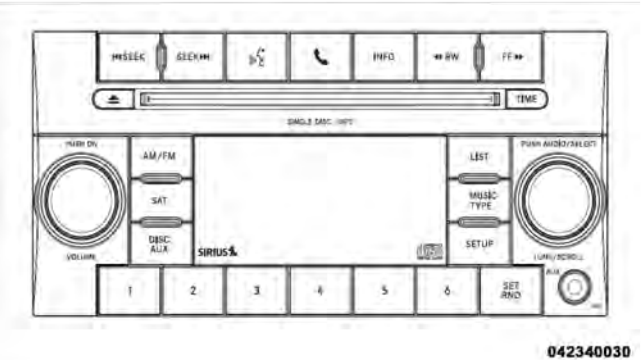

Media Center 130 (RES/RSC)

Operating Instructions — Radio Mode

NOTE: The ignition switch must be in the ON/RUN or ACC position to operate the radio.

Power Switch/Volume Control (Rotary)
Push the ON/VOLUME control knob to turn on the radio. Push the ON/VOLUME control knob a second time to turn off the radio.

Electronic Volume Control
The electronic volume control turns continuously (360 degrees) in either direction without stopping. Turning the ON/VOLUME control knob to the right increases the volume and to the left decreases it.

When the audio system is turned on, the sound will be set at the same volume level as last played.

SEEK Buttons
Press and release the SEEK buttons to search for the next listenable station in AM/FM mode. Press the right switch to seek up and the left switch to seek down. The radio will remain tuned to the new station until you make another selection. Holding either button will bypass stations without stopping until you release it.

Voice Command System (Radio) — If Equipped
Refer to "Voice Command" in the Uconnect™ User Manual located on the DVD for further details.

Voice Command Button Uconnect™ Phone — If Equipped
Press this button to operate the Uconnect™ Phone feature (if equipped). Refer to "Voice Command" in the Uconnect™ User Manual located on the DVD for further details.

If your vehicle is not equipped with or this feature is not available on your vehicle, a "Not Equipped With Uconnect Phone" message will display on the radio screen.

Phone Button Uconnect™ Phone — If Equipped
Press this button to operate the Uconnect™ Phone feature (if equipped). Refer to "Uconnect™ Phone" in the Uconnect™ User Manual located on the DVD for further details.

If your vehicle is not equipped with or this feature is not available on your vehicle, a “Not Equipped With Uconnect Phone” message will display on the radio screen.

TIME Button

Press the TIME button to alternate display of the time and radio frequency.

Clock Setting Procedure

1. Press and hold the TIME button until the hours blink.

2. Adjust the hours by turning the right side TUNE/SCROLL control knob.

3. After adjusting the hours, press the right side TUNE/SCROLL control knob to set the minutes. The minutes will begin to blink.

4. Adjust the minutes using the right side TUNE/SCROLL control knob. Press the TUNE/SCROLL control knob to save time change.

5. To exit, press any button/knob or wait five seconds.

The clock can also be set by pressing the SETUP button. For vehicles equipped with satellite radio, press the SETUP button, use the TUNE/SCROLL control to select SET CLOCK, and then follow the above procedure, starting at Step 2. For vehicles not equipped with satellite radio, press the SETUP button and then follow the above procedure, starting at Step 2.

INFO Button

Press the INFO button for an RDS station (one with call letters displayed). The radio will return a Radio Text message broadcast from an FM station (FM mode only).

RW/FF

Pressing the RW (Rewind) or FF (Fast Forward) buttons causes the tuner to search for the next frequency in the direction of the arrows. This feature operates in either AM or FM frequencies.

TUNE Control

Turn the rotary TUNE/SCROLL control knob clockwise to increase or counterclockwise to decrease the frequency.

Setting the Tone, Balance, and Fade

Push the rotary TUNE/SCROLL control knob and BASS will display. Turn the TUNE/SCROLL control knob to the right or left to increase or decrease the bass tones.

Push the rotary TUNE/SCROLL control knob a second time and MID will display. Turn the TUNE/SCROLL control knob to the right or left to increase or decrease the mid-range tones.

Push the rotary TUNE/SCROLL control knob a third time and TREBLE will display. Turn the TUNE/SCROLL control knob to the right or left to increase or decrease the treble tones.

Push the rotary TUNE/SCROLL control knob a fourth time and BALANCE will display. Turn the TUNE/SCROLL control knob to the right or left to adjust the sound level from the right or left side speakers.

Push the rotary TUNE/SCROLL control knob a fifth time and FADE will display. Turn the TUNE/SCROLL control knob to the left or right to adjust the sound level between the front and rear speakers.

Push the rotary TUNE/SCROLL control knob again to exit setting tone, balance, and fade.

MUSIC TYPE Button

Pressing this button once will turn on the Music Type mode for five seconds. Pressing the MUSIC TYPE button or turning the TUNE/SCROLL control knob within five seconds will allow the program format type to be selected. Many radio stations do not currently broadcast Music Type information.

Toggle the MUSIC TYPE button to select the following format types:

Program Type	16-Digit Character Display
No program type or undefined	None
Adult Hits	Adlt Hit
Classical	Classicl
Classic Rock	Cls Rock
College	College
Country	Country
Foreign Language	Language
Information	Inform
Jazz	Jazz
News	News
Nostalgia	Nostalga
Oldies	Oldies
Personality	Persnlty
Public	Public
Rhythm and Blues	R & B
Religious Music	Rel Musc
Religious Talk	Rel Talk
Rock	Rock
Soft	Soft
Soft Rock	Soft Rck
Soft Rhythm and Blues	Soft R&B

Program Type	16-Digit Character Display
Sports	Sports
Talk	Talk
Top 40	Top 40
Weather	Weather

By pressing the SEEK button when the Music Type icon is displayed, the radio will be tuned to the next frequency station with the same selected Music Type name. The Music Type function only operates when in the FM mode.

If a preset button is activated while in the Music Type (Program Type) mode, the Music Type mode will be exited and the radio will tune to the preset station.

SETUP Button

Pressing the SETUP button allows you to select between the following items:

- **Set Clock** — Pressing the SELECT button will allow you to set the clock. Adjust the hours by turning the TUNE/SCROLL control knob. After adjusting the hours, press the TUNE/SCROLL control knob to set the minutes. The minutes will begin to blink. Adjust the minutes using the right side TUNE/SCROLL control knob. Press the TUNE/SCROLL control knob to save time change.

AM/FM Button

Press the button to select either AM or FM mode.

SET/RND Button — To Set the Pushbutton Memory

When you are receiving a station that you wish to commit to pushbutton memory, press the SET/RND button. The symbol SET 1 will now show in the display

window. Select the button (1–6) you wish to lock onto this station and press and release that button. If a button is not selected within five seconds after pressing the SET/RND button, the station will continue to play but will not be stored into pushbutton memory.

You may add a second station to each pushbutton by repeating the above procedure with this exception: Press the SET/RND button twice and SET 2 will show in the display window. Each button can be set for SET 1 and SET 2 in both AM and FM. This allows a total of 12 AM and 12 FM stations to be stored into pushbutton memory. The stations stored in SET 2 memory can be selected by pressing the pushbutton twice.

Every time a preset button is used, a corresponding button number will display.

Buttons 1 - 6

These buttons tune the radio to the stations that you commit to pushbutton memory (12 AM and 12 FM stations).

DISC/AUX Button

Pressing the DISC/AUX button will allow you to switch from AM/FM modes to DISC/AUX mode.

Operation Instructions — CD MODE for CD and MP3 Audio Play

NOTE:

- The ignition switch must be in the ON/RUN or ACC position to operate the radio.
- This radio is capable of playing compact discs (CD), recordable compact discs (CD-R), rewritable compact discs (CD-RW), compact discs with MP3 tracks and multisession compact discs with CD and MP3 tracks.

Inserting Compact Disc(s)

Gently insert one CD into the CD player with the CD label facing up. The CD will automatically be pulled into the CD player and the CD icon will illuminate on the radio display. If a CD does not go into the slot more than 1.0 in (2.5 cm), a disc may already be loaded and must be ejected before a new disc can be loaded.

If you insert a disc with the ignition ON/RUN and the radio ON, the unit will switch from radio to CD mode and begin to play when you insert the disc. The display will show the track number, and index time in minutes and seconds. Play will begin at the start of track 1.

CAUTION!

- **This CD player will accept 4–3/4 in (12 cm) discs only. The use of other sized discs may damage the CD player mechanism.**

(Continued)

CAUTION! (Continued)

- **Do not use adhesive labels. These labels can peel away and jam the player mechanism.**
- **RES is a single CD player. Do not attempt to insert a second CD if one is already loaded.**
- **Dual-media disc types (one side is a DVD, the other side is a CD) should not be used, and they can cause damage to the player.**

EJECT Button - Ejecting a CD

Press the EJECT button to eject the CD.

If you have ejected a disc and have not removed it within 10 seconds, it will be reloaded. If the CD is not removed, the radio will reinsert the CD but will not play it.

A disc can be ejected with the radio and ignition OFF.

NOTE: Ejecting with the ignition OFF is not allowed on convertible or soft-top models (if equipped).

SEEK Button
Press the right SEEK button for the next selection on the CD. Press the left SEEK button to return to the beginning of the current selection, or return to the beginning of the previous selection if the CD is within the first second of the current selection. Pressing and holding the SEEK button will allow faster scrolling through the tracks in CD and MP3 modes.

TIME Button
Press this button to change the display from a large CD playing time display to a small CD playing time display.

RW/FF
Press and hold FF (Fast Forward) and the CD player will begin to fast forward until FF is released or RW or another CD button is pressed. The RW (Reverse) button works in a similar manner.

AM/FM Button
Press the button to select either AM or FM mode.

SET/RND Button (Random Play Button)
Press this button while the CD is playing to activate Random Play. This feature plays the selections on the compact disc in random order to provide an interesting change of pace.

Press the right SEEK button to move to the next randomly selected track.

Press the SET/RND button a second time to stop Random Play.

Notes On Playing MP3 Files

The radio can play MP3 files; however, acceptable MP3 file recording media and formats are limited. When writing MP3 files, pay attention to the following restrictions.

Supported Media (Disc Types)
The MP3 file recording media supported by the radio are CDDA, CD-R, CD-RW, MP3, and CDDA+MP3.

Supported Medium Formats (File Systems)
The medium formats supported by the radio are ISO 9660 Level 1 and Level 2 and includes the Joliet extension. When reading discs recorded using formats other than ISO 9660 Level 1 and Level 2, the radio may fail to read files properly and may be unable to play the file normally. UDF and Apple HFS formats are not supported.

The radio uses the following limits for file systems:

- Maximum number of folder levels: 8
- Maximum number of files: 255
- Maximum number of folders. (The radio display of file names and folder names is limited. For large numbers of files and/or folders, the radio may be unable to display the file name and folder name and will assign a number instead. With a maximum number of files, exceeding 20 folders will result in this display. With 200 files, exceeding 50 folders will result in this display.)
- Maximum number of characters in file/folder names:
  - Level 1: 12 (including a separator "." and a three-character extension)
  - Level 2: 31 (including a separator "." and a three-character extension)

Multisession disc formats are supported by the radio. Multisession discs may contain combinations of normal CD audio tracks and computer files (including MP3 files). Discs created with an option such as "keep disc open after writing" are most likely multisession discs. The use of multisession for CD audio or MP3 playback may result in longer disc loading times.

Supported MP3 File Formats

The radio will recognize only files with the *.MP3 extension as MP3 files. Non-MP3 files named with the *.MP3 extension may cause playback problems. The radio is designed to recognize the file as an invalid MP3 and will not play the file.

When using the MP3 encoder to compress audio data to an MP3 file, the bit rate and sampling frequencies in the following table are supported. In addition, variable bit rates (VBR) are also supported. The majority of MP3 files use a 44.1 kHz sampling rate and a 192, 160, 128, 96 or VBR bit rates.

MPEG Specification	Sampling Frequency (kHz)	Bit Rate (kbps)
MPEG-1 Audio Layer 3	48, 44.1, 32	320, 256, 224, 192, 160, 128, 112, 96, 80, 64, 56, 48, 40, 32
MPEG-2 Audio Layer 3	24, 22.05, 16	160, 128, 144, 112, 96, 80, 64, 56, 48, 40, 32, 24, 16, 8

ID3 Tag information for artist, song title, and album title are supported for version 1 ID3 tags. ID3 version 2 is not supported by the radios.

Playlist files are not supported. MP3 Pro files are not supported.

Playback of MP3 Files

When a medium containing MP3 data is loaded, the radio checks all files on the medium. If the medium contains a lot of folders or files, the radio will take more time to start playing the MP3 files.

Loading times for playback of MP3 files may be affected by the following:

- Media - CD-RW media may take longer to load than CD-R media
- Medium formats - Multisession discs may take longer to load than non-multisession discs
- Number of files and folders - Loading times will increase with more files and folders

To increase the speed of disc loading, it is recommended to use CD-R media and single-session discs. To create a single-session disc, enable the "Disc at Once" option before writing to the disc.

LIST Button (CD Mode for MP3 Play)

Pressing the LIST button will bring up a list of all folders on the disc. Scrolling up or down the list is done by turning the TUNE/SCROLL control knob. Selecting a folder by pressing the TUNE/SCROLL control knob will begin playing the files contained in that folder (or the next folder in sequence if the selection does not contain playable files).

The folder list will time out after five seconds.

INFO Button (CD Mode for MP3 Play)

Pressing the INFO button repeatedly will scroll through the following TAG information: Song Title, Artist, File Name, and Folder Name (if available).

Press the INFO button once more to return to ″elapsed time″ priority mode.

Press and hold the INFO button for three seconds or more and the radio will display song titles for each file.

Press and hold the INFO button again for three seconds to return to ″elapsed time″ display.

Operation Instructions - Auxiliary Mode

The auxiliary (AUX) jack is an audio input jack which allows the user to plug in a portable device such as an MP3 player or cassette player and utilize the vehicle's audio system to amplify the source and play through the vehicle speakers.

Pressing the AUX button will change the mode to auxiliary device if the AUX jack is connected.

NOTE: The AUX device must be turned on and the device's volume set to the proper level. If the AUX audio is not loud enough, turn the device's volume up. If the AUX audio sounds distorted, turn the device's volume down.

TIME Button (Auxiliary Mode)

Press this button to change the display to time of day. The time of day will display for five seconds (when the ignition is OFF).

Uconnect™ Multimedia (Satellite Radio) — If Equipped

Satellite radio uses direct satellite-to-receiver broadcasting technology to provide clear digital sound, coast to coast. The subscription service provider is Sirius Satellite Radio. This service offers over 130 channels of music, sports, news, entertainment, and programming for children, directly from its satellites and broadcasting studios.

NOTE: Sirius service is not available in Hawaii and has limited coverage in Alaska.

System Activation

Sirius Satellite Radio service is pre-activated, and you may begin listening immediately to the one year of audio service that is included with the factory-installed satellite radio system in your vehicle. Sirius will supply a welcome kit that contains general information, including how to setup your on-line listening account. For further

information, call the toll-free number 888-539-7474, or visit the Sirius web site at www.sirius.com, or at www-.siriuscanada.ca for Canadian residents.

Electronic Serial Number/Sirius Identification Number (ESN/SID)

Please have the following information available when calling:

1. The Electronic Serial Number/Sirius Identification Number (ESN/SID).

2. Your Vehicle Identification Number.

To access the ESN/SID, refer to the following steps:

ESN/SID Access

With the ignition switch in the ON/RUN or ACC position and the radio on, press the SETUP button and scroll using the TUNE/SCROLL control knob until Sirius ID is selected. Press the TUNE/SCROLL control knob and the Sirius ID number will display. The Sirius ID number display will time out in two minutes. Press any button on the radio to exit this screen.

Selecting Uconnect™ Multimedia (Satellite) Mode

Press the SAT button until "SAT" appears in the display. A CD may remain in the radio while in the Satellite radio mode.

Satellite Antenna

To ensure optimum reception, do not place items on the roof around the rooftop antenna location. Metal objects placed within the line of sight of the antenna will cause decreased performance. Larger luggage items such as bikes should be placed as far rearward as possible, within the loading design of the rack. Do not place items directly on or above the antenna.

Reception Quality

Satellite reception may be interrupted due to one of the following reasons:

- The vehicle is parked in an underground parking structure or under a physical obstacle.
- Dense tree coverage may interrupt reception in the form of short audio mutes.
- Driving under wide bridges or along tall buildings can cause intermittent reception.
- Placing objects over or too close to the antenna can cause signal blockage.

Operating Instructions - Uconnect™ Multimedia (Satellite) Mode

NOTE: The ignition switch must be in the ON/RUN or ACC position to operate the radio.

SEEK Buttons

Press and release the SEEK buttons to search for the next channel in Satellite mode. Press the right switch to seek up and the left switch to seek down. The radio will remain tuned to the new channel until you make another selection. Holding either button will bypass channels without stopping until you release it.

SCAN Button

Pressing the SCAN button causes the tuner to search for the next channel, pausing for eight seconds before continuing to the next. To stop the search, press the SCAN button a second time.

INFO Button

Pressing the INFO button will cycle the display information between Artist, Song Title, and Composer (if available). Also, pressing and holding the INFO button for an

additional three seconds will make the radio display the Song Title all of the time (press and hold again to return to normal display).

RW/FF
Pressing the RW (Rewind) or FF (Fast Forward) buttons causes the tuner to search for the next channel in the direction of the arrows.

TUNE Control (Rotary)
Turn the rotary TUNE/SCROLL control knob clockwise to increase or counterclockwise to decrease the channel.

MUSIC TYPE Button
Pressing this button once will turn on the Music Type mode for five seconds. Pressing the MUSIC TYPE button or turning the TUNE/SCROLL control knob within five seconds will allow the program format type to be selected.

Toggle the MUSIC TYPE button again to select the music type.

By pressing the SEEK button when the Music Type function is active, the radio will be tuned to the next channel with the same selected Music Type name.

If a preset button is activated while in the Music Type (Program Type) mode, the Music Type mode will be exited and the radio will tune to the preset channel.

SETUP Button
Pressing the SETUP button allows you to select the following items:

- Display Sirius ID number — Press the AUDIO/SELECT button to display the Sirius ID number. This number is used to activate, deactivate, or change the Sirius subscription.

SET Button – To Set the Pushbutton Memory

When you are receiving a channel that you wish to commit to pushbutton memory, press the SET button. The symbol SET 1 will now show in the display window. Select the button (1-6) you wish to lock onto this channel and press and release that button. If a button is not selected within five seconds after pressing the SET button, the channel will continue to play but will not be stored into pushbutton memory.

You may add a second channel to each pushbutton by repeating the above procedure with this exception: Press the SET button twice and SET 2 will show in the display window. Each button can be set for SET 1 and SET 2. This allows a total of 12 Satellite channels to be stored into pushbutton memory. The channels stored in SET 2 memory can be selected by pressing the pushbutton twice.

Every time a preset button is used, a corresponding button number will display.

Buttons 1 - 6

These buttons tune the radio to the channels that you commit to pushbutton memory (12 Satellite stations).

Operating Instructions (Uconnect™ Phone) — If Equipped

Refer to "Uconnect™ Phone" in the Uconnect™ User Manual located on the DVD for further details.

iPod® CONTROL — IF EQUIPPED

NOTE: This section is for sales code RES and REQ/REL/RET radios only with Uconnect™. For sales code RER, RBZ, REN, REP, REW, RB2 or REZ touch-screen radio iPod® control feature, refer to the separate RER, REN, RBZ, RB2 or REZ User's Manual. iPod® control is available only if equipped as an option with these radios.

This feature allows an iPod® to be plugged into the vehicle's sound system through a 16–pin connector, using the provided interface cable.

iPod® control supports Mini, 4G, Photo, Nano, 5G iPod® and iPhone® devices. Some iPod® software versions may not fully support the iPod® control features. Please visit Apple's website for software updates.

NOTE:

- If the radio has a USB port, refer to the appropriate Uconnect Multimedia radio user's manual for iPod or external USB device support capability.
- Connecting an iPod® to the AUX port located in the radio faceplate, plays media, but does not use the iPod® control feature to control the connected device.

Connecting The iPod®

Use the provided connection cable to connect an iPod® to the vehicle's 16–pin connector port (which is located in the glove compartment on some vehicles). Once the iPod® is connected and synchronized to the vehicle's iPod® control system (iPod® may take a few seconds to connect), the iPod® starts charging and is ready for use by pressing radio switches, as described below.

NOTE:

- It may be necessary to remove the connector pin protection cap from the 16–pin connector port, prior to connecting the cable.
- If the iPod® battery is completely discharged, it may not communicate with the iPod® control system until a minimum charge is attained. Leaving the iPod® connected to the iPod® control system may charge it to the required level.

Using This Feature

By using the provided connection cable to connect an iPod® to the vehicle's iPod® control 16–pin connector port:

- The iPod® audio can be played on the vehicle's sound system, providing metadata (artist, track title, album, etc.) information on the radio display.
- The iPod® can be controlled using the radio buttons to Play, Browse, and List the iPod® contents.
- The iPod® battery charges when plugged into the iPod® control connector (if supported by the specific iPod® device)

Controlling The iPod® Using Radio Buttons

To get into the iPod® control mode and access a connected iPod®, press the "AUX" button on the radio faceplate. Once in the iPod® control mode, iPod® audio tracks (if available from iPod®) start playing over the vehicle's audio system.

Play Mode

When switched to iPod® control mode, the iPod® automatically starts Play mode. In Play mode, use the following buttons on the radio faceplate to control the iPod® and display data:

- Use the TUNE control knob to select the next or previous track.
  - Turning it clockwise (forward) by one click, while playing a track, skips to the next track.
  - Turning it counterclockwise (backward) by one click, during the first two seconds of the track, will jump to the previous track in the list. Turning this button at any other time in the track, will jump to the beginning of the current track.

- Jump backward in the current track by pressing and holding the << **RW** button. Holding the << **RW** button long enough will jump to the beginning of the current track.

- Jump forward in the current track by pressing and holding the **FF** >> button.

- A single press backward << **RW** or forward **FF** >> will jump backward or forward respectively, for five seconds.

- Use the << **SEEK** and **SEEK** >> buttons to jump to the previous or next track. If the << **SEEK** button is pressed during the first two seconds of the track, it will jump to the previous track in the list; pressing this button at any other time in the track, it will jump to the beginning of the track. Pressing the **SEEK** >> button during play mode, it will jump to the next track in the list.

- While a track is playing, press the **INFO** button to see the associated metadata (artist, track title, album, etc.) for that track. Pressing the **INFO** button again jumps to the next screen of data for that track. Once all screens have been viewed, the last **INFO** button press will go back to the play mode screen on the radio.

- Pressing the **REPEAT** button will change the iPod® mode to repeat the current playing track.

- Press the **SCAN** button to use iPod® scan mode, which will play the first five seconds of each track in the current list and then forward to the next song. To stop SCAN mode and start playing the desired track, when it is playing the track, press the **SCAN** button again. During Scan mode, pressing the << **SEEK** and **SEEK** >> buttons will select the previous and next tracks.

- **RND** button (available on sales code RES radio only): Pressing this button toggles between Shuffle ON and

Shuffle OFF modes for the iPod®. If the **RND** icon is showing on the radio display, then the shuffle mode is ON.

List Or Browse Mode

During Play mode, pressing any of the buttons described below, will bring up List mode. List mode enables scrolling through the list of menus and tracks on the iPod®.

- **TUNE** control knob: The **TUNE** control knob functions in a similar manner as the scroll wheel on the iPod®.
  - Turning it clockwise (forward) and counterclockwise (backward) scrolls through the lists, displaying the track detail on the radio display. Once the track to be played is highlighted on the radio display, press the **TUNE** control knob to select and start playing the track. Turning the **TUNE** control knob fast will scroll through the list faster. During fast scroll, a slight delay in updating the information on the radio display may be noticed.
- During all List modes, the iPod® displays all lists in "wrap-around" mode. So if the track is at the bottom of the list, just turn the wheel backwards (counter-clockwise) to get to the track faster.
- In List mode, the radio **PRESET** buttons are used as shortcuts to the following lists on the iPod®.
  - Preset 1 – Playlists
  - Preset 2 – Artists
  - Preset 3 – Albums
  - Preset 4 – Genres
  - Preset 5 – Audiobooks
  - Preset 6 – Podcasts

- Pressing a PRESET button will display the current list on the top line and the first item in that list on the second line.
- To Exit List mode without selecting a track, press the same **PRESET** button again to go back to **Play mode**.

- **LIST** button: The **LIST** button will display the top level menu of the iPod®. Turn the **TUNE** control knob to list the top-menu item to be selected and press the **TUNE** control knob. This will display the next sub-menu list item on the iPod® then follow the same steps to go to the desired track in that list. Not all iPod® sub-menu levels are available on this system.
- **MUSIC TYPE** button: The **MUSIC TYPE** button is another shortcut button to the genre listing on your iPod®.

CAUTION!

- **Leaving the iPod® (or any supported device) anywhere in the vehicle in extreme heat or cold can alter the operation or damage the device. Follow the device manufacturer's guidelines.**
- **Placing items on the iPod®, or connections to the iPod® in the vehicle, can cause damage to the device and/or to the connectors.**

WARNING!

Do not plug in or remove the iPod® while driving. Failure to follow this warning could result in an accident.

iPod®/USB/MP3 CONTROL — IF EQUIPPED

NOTE: This section is for sales code RES and REQ/REL/RET radios only with Uconnect™. For sales code RBZ/RHB, RHR, RHP, RHW or RB2 touch-screen radio iPod®/USB/MP3 control feature, refer to the separate RBZ/RHB, RHR, RHP, RHW or RB2 User's Manual. iPod®/USB/MP3 control is available only if equipped as an option with these radios.

This feature allows an iPod® or external USB device to be plugged into the USB port, located in the center console or glove compartment.

iPod® control supports Mini, 4G, Photo, Nano, 5G iPod® and iPhone® devices. Some iPod® software versions may not fully support the iPod® control features. Please visit Apple's website for software updates.

NOTE:

- If the radio has a USB port, refer to the appropriate Uconnect™ Multimedia radio User's Manual for iPod® or external USB device support capability.
- Connecting an iPod® or consumer electronic audio device to the AUX port located in the radio faceplate, plays media, but does not use the iPod® /MP3 control feature to control the connected device.

Connecting The iPod® Or External USB Device

Use the connection cable to connect an iPod® or external USB device to the vehicle's USB/AUX connector port which is located in the center console or glove compartment.

044136844

USB/AUX Connector Port

Once the audio device is connected and synchronized to the vehicle's iPod®/USB/MP3 control system (iPod® or external USB device may take a few minutes to connect), the audio device starts charging and is ready for use by pressing radio switches, as described below.

NOTE: If the audio device battery is completely discharged, it may not communicate with the iPod®/USB/MP3 control system until a minimum charge is attained. Leaving the audio device connected to the iPod®/USB/MP3 control system may charge it to the required level.

Using This Feature

By using iPod cable or external USB device to connect to USB port:

- The audio device can be played on the vehicle's sound system, providing metadata (artist, track title, album, etc.) information on the radio display.
- The audio device can be controlled using the radio buttons to Play, Browse, and List the iPod® contents.
- The audio device battery charges when plugged into the USB/AUX connector (if supported by the specific audio device)

Controlling The iPod® Or External USB Device Using Radio Buttons

To get into the iPod®/USB/MP3 control mode and access a connected audio device, either press the "AUX" button on the radio faceplate or press the VR button and say "USB" or "Switch to USB". Once in the iPod®/USB/MP3 control mode, audio tracks (if available from audio device) start playing over the vehicle's audio system.

Play Mode

When switched to iPod®/USB/MP3 control mode, the iPod® or external USB device automatically starts Play mode. In Play mode, the following buttons on the radio faceplate may be used to control the iPod® or external USB device and display data:

- Use the TUNE control knob to select the next or previous track.
  - Turning it clockwise (forward) by one click, while playing a track, skips to the next track or press the VR button and say "Next Track".
  - Turning it counterclockwise (backward) by one click, will jump to the previous track in the list or press the VR button and say "Previous Track"
  - Jump backward in the current track by pressing and holding the << **RW** button. Holding the << **RW** button long enough will jump to the beginning of the current track.
- Jump forward in the current track by pressing and holding the **FF** >> button.
- A single press backward << **RW** or forward **FF** >> will jump backward or forward respectively, for five seconds.
- Use the << **SEEK** and **SEEK** >> buttons to jump to the previous or next track. Pressing the **SEEK** >> button

during play mode will jump to the next track in the list, or press the VR button and say "Next or Previous Track".

- While a track is playing, press the **INFO** button to see the associated metadata (artist, track title, album, etc.) for that track. Pressing the **INFO** button again jumps to the next screen of data for that track. Once all screens have been viewed, the last **INFO** button press will go back to the play mode screen on the radio.
- Pressing the **REPEAT** button will change the audio device mode to repeat the current playing track or press the VR button and say "Repeat ON" or "Repeat Off".
- Press the **SCAN** button to use iPod®/USB/MP3 device scan mode, which will play the first 10 seconds of each track in the current list and then forward to the next song. To stop SCAN mode and start playing the desired track, when it is playing the track, press the **SCAN** button again. During Scan mode, pressing the << **SEEK** and **SEEK** >> buttons will select the previous and next tracks.
- **RND** button (available on sales code RES radio only): Pressing this button toggles between Shuffle ON and Shuffle OFF modes for the iPod® or external USB device, or press the VR button and say "Shuffle ON" or "Shuffle Off". If the **RND** icon is showing on the radio display, then the shuffle mode is ON.

List Or Browse Mode

During Play mode, pressing any of the buttons described below, will bring up List mode. List mode enables scrolling through the list of menus and tracks on the audio device.

- **TUNE** control knob: The **TUNE** control knob functions in a similar manner as the scroll wheel on the audio device or external USB device.

- Turning it clockwise (forward) and counterclockwise (backward) scrolls through the lists, displaying the track detail on the radio display. Once the track to be played is highlighted on the radio display, press the **TUNE** control knob to select and start playing the track. Turning the **TUNE** control knob fast will scroll through the list faster. During fast scroll, a slight delay in updating the information on the radio display may be noticeable.
- During all List modes, the iPod® displays all lists in "wrap-around" mode. So if the track is at the bottom of the list, just turn the wheel backward (counterclockwise) to get to the track faster.
- In List mode, the radio **PRESET** buttons are used as shortcuts to the following lists on the iPod® or external USB device.
  - Preset 1 – Playlists
  - Preset 2 – Artists
  - Preset 3 – Albums
  - Preset 4 – Genres
  - Preset 5 – Audiobooks
  - Preset 6 – Podcasts
- Pressing a PRESET button will display the current list on the top line and the first item in that list on the second line.
- To exit List mode without selecting a track, press the same **PRESET** button again to go back to **Play mode**.

- **LIST** button: The **LIST** button will display the top level menu of the iPod® or external USB device. Turn the **TUNE** control knob to list the top-menu item to be selected and press the **TUNE** control knob. This will display the next sub-menu list item on the audio

device, then follow the same steps to go to the desired track in that list. Not all iPod® or external USB device sub-menu levels are available on this system.

- **MUSIC TYPE** button: The **MUSIC TYPE** button is another shortcut button to the genre listing on your audio device.

CAUTION!

- **Leaving the iPod® or external USB device (or any supported device) anywhere in the vehicle in extreme heat or cold can alter the operation or damage the device. Follow the device manufacturer's guidelines.**
- **Placing items on the iPod® or external USB device, or connections to the iPod® or external USB device in the vehicle, can cause damage to the device and/or to the connectors.**

WARNING!

Do not plug in or remove the iPod® or external USB device while driving. Failure to follow this warning could result in an accident.

Bluetooth Streaming Audio (BTSA)

Music can be streamed from your cellular phone to the Uconnect™ phone system.

Controlling BTSA Using Radio Buttons

To get into the BTSA mode, press either "AUX" button on the radio or press the VR button and say "Bluetooth Streaming Audio".

Play Mode

When switched to BTSA mode, some audio devices can start playing music over the vehicle's audio system, but some devices require the music to be initiated on the device first, then it will get streamed to the Uconnect™

phone system. Seven devices can be paired to the Uconnect™ phone system, but just one can be selected and played.

Selecting Different Audio Device

1. Press PHONE button to begin.

2. After the "Ready" prompt and the following beep, say "Setup", then "Select Audio Devices".

3. Say the name of the audio device or ask the Uconnect™ phone system to list audio devices.

Next Track
Use the SEEK UP button, or press the VR button on the radio and say "Next Track" to jump to the next track music on your cellular phone.

Previous Track
Use the SEEK DOWN button, or press the VR button on the radio and say "Previous Track" to jump to the previous track music on your cellular phone.

Browse
Browsing is not available on a BTSA device. Only the current song that is playing will display info.

VIDEO ENTERTAINMENT SYSTEM (VES)™ — IF EQUIPPED

The optional Video Entertainment System (VES)™ is available with:

- Battery-powered two-channel remote control
- Two remote headphones
- Integrated remote storage in screen location
- Three different medias can be played simultaneously (Cabin speakers and Headphone Channels 1 and 2)

- Easy menu-driven functions on touch-screen radios
- Video and audio input jacks available in rear seating area
- Nine different medias to choose from in each screen (AM, FM, Sirius Radio, DVD1, DVD2, Hard Disc Drive (HDD), AUX in radio, AUX1, AUX2)

The LCD screen is located in the overhead compartment console.

Overhead Video Screen

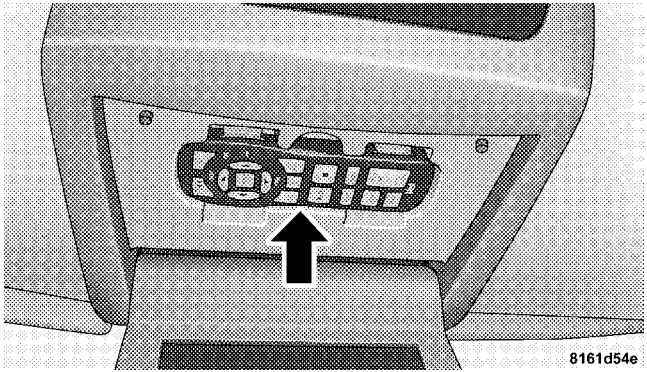

VES™ Remote Control Location

NOTE: Refer to the "Uconnect™ Multimedia" section of Uconnect™ User Manual located on the DVD for further details.

STEERING WHEEL AUDIO CONTROLS — IF EQUIPPED

The remote sound system controls are located on the rear surface of the steering wheel. Reach behind the wheel to access the switches.

Remote Sound System Controls (Back View Of Steering Wheel)

The right hand control is a rocker type switch with a pushbutton in the center. Pressing the top of the switch will increase the volume, and pressing the bottom of the switch will decrease the volume.

The button located in the center of the right hand control will switch modes to Radio, CD or other valid audio source.

The left hand control is a rocker type switch with a pushbutton in the center. The function of the left hand control is different depending on which mode you are in.

The following describes the left hand control operation in each mode.

Radio Operation

Pressing the top of the switch will SEEK up for the next listenable station and pressing the bottom of the switch will SEEK down for the next listenable station.

The button located in the center of the left hand control will tune to the next pre-set station that you have programmed in the radio pre-set pushbuttons.

CD Player

Pressing the top of the switch once will go to the next track on the CD. Pressing the bottom of the switch once will go to the beginning of the current track or to the beginning of the previous track if it is within one second after the current track begins to play.

If you press the switch up or down twice it plays the second track, three times, it will play the third, etc.

The button in the center of the left hand switch changes CDs on the 6–Disc in-dash CD changer radio. This button does not function for all other radios.

CD/DVD DISC MAINTENANCE

To keep a CD/DVD in good condition, take the following precautions:

1. Handle the disc by its edge; avoid touching the surface.

2. If the disc is stained, clean the surface with a soft cloth, wiping from center to edge.

3. Do not apply paper or tape to the disc; avoid scratching the disc.

4. Do not use solvents such as benzene, thinner, cleaners, or anti-static sprays.

5. Store the disc in its case after playing.

6. Do not expose the disc to direct sunlight.

7. Do not store the disc where temperatures may become too high.

NOTE: If you experience difficulty in playing a particular disc, it may be damaged (i.e., scratched, reflective coating removed, a hair, moisture or dew on the disc) oversized, or have protection encoding. Try a known good disc before considering disc player service.

RADIO OPERATION AND MOBILE PHONES

Under certain conditions, the mobile phone being on in your vehicle can cause erratic or noisy performance from your radio. This condition may be lessened or eliminated by relocating the mobile phone antenna. This condition is not harmful to the radio. If your radio performance does not satisfactorily "clear" by the repositioning of the antenna, it is recommended that the radio volume be turned down or off during mobile phone operation when not using Uconnect™ (if equipped).

CLIMATE CONTROLS

The Climate Control System allows you to regulate the temperature, amount, and direction of air circulating

throughout the vehicle. The controls are located on the instrument panel below the radio.

NOTE: During snowplow usage on vehicles equipped with outside temperature display, the display may show higher temperatures than the outside ambient temperature. The higher displayed temperature is due to blocked or reduced airflow to the underhood ambient temperature sensor caused by the snowplow. In addition, on vehicles equipped with Automatic Temperature Control (ATC), it is suggested that the interior cabin temperature be manually controlled should the system not perform as desired while in automatic mode. Both the outside temperature display and ATC operation will return to normal when the snowplow is removed.

Manual Heating And Air Conditioning System

The controls for the manual heating and air conditioning system in this vehicle consist of a series of outer rotary dials and inner push knobs. These comfort controls can be set to obtain desired interior conditions.

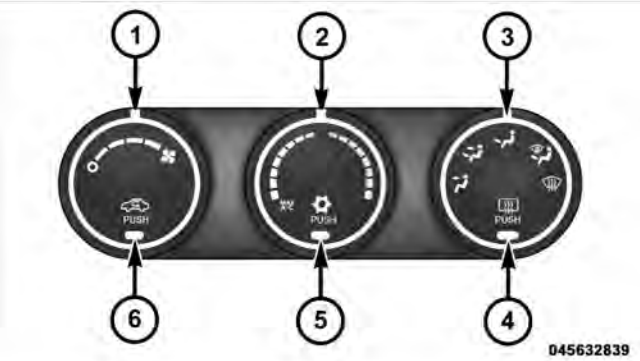

1 – Front Blower	4 – DEFROST Mode
2 – Temperature Control	5 – Air Conditioning (A/C)
3 – MODE Control	6 – RECIRCULATION Control

Front Blower Control

045632841

There are four blower speeds. Use this control to regulate the amount of air forced through the system in any mode you select. The blower speed increases as you move the control clockwise from the OFF position.

NOTE: For vehicles equipped with Remote Start, the climate controls will not function during Remote Start operation if the blower control is left in the OFF position.

Temperature Control

045632845

Use this control to regulate the temperature of the air inside the passenger compartment. Rotating the knob counterclockwise, from top center into the blue area of the scale, indicates cooler temperatures. Rotating the knob clockwise, into the red area, indicates warmer temperatures.

NOTE: If your air conditioning performance seems lower than expected, check the front of the A/C condenser (located in front of the radiator), for an accumulation of dirt or insects. Clean with a gentle water spray from behind the radiator and through the condenser. Fabric front fascia protectors may reduce airflow to the condenser, reducing air conditioning performance.

Mode Control (Air Direction)

045632842

Mode control allows you to choose from several patterns of air distribution. You can select either a primary mode, as identified by the symbols, or a blend of two of these modes. The closer the control is to a particular mode, the more air distribution you receive from that mode.

Panel Mode

Air is directed through the outlets in the instrument panel. These outlets can be adjusted to direct airflow.

Bi-Level Mode

Air is directed through the panel and floor outlets.

NOTE: There is a difference in temperature (in any conditions other than full cold or full hot), between the upper and lower outlets for added comfort. The warmer air goes to the floor outlets. This feature gives improved comfort during sunny but cool conditions.

Floor Mode

Air is directed through the floor outlets with a small amount through the defrost and side window demist outlets.

Mix Mode

Air is directed through the floor, defrost and side window demist outlets. This setting works best in cold or snowy conditions that require extra heat at the windshield. This setting is good for maintaining comfort, while reducing moisture on the windshield.

Defrost Mode

Air is directed through the windshield and side window demist outlets. Use the DEFROST mode with maximum blower and warm temperature settings for best windshield and side window defrosting.

NOTE: The air conditioning compressor operates in MIX and DEFROST, or a blend of these modes even if the A/C button is not pressed. This dehumidifies the air to help dry the windshield. To improve fuel economy, use these modes only when necessary.

Recirculation Control

Press this button to choose between outside air intake or recirculation of the air inside the vehicle. A LED will illuminate when you are in Recirculation mode. Only use the Recirculation mode to temporarily block out any outside odors, smoke, or dust, and to cool the interior rapidly upon initial start-up in very hot or humid weather.

NOTE:

- If the RECIRCULATION button is pressed when the system is in Mix or Defrost mode the Recirculation LED indicator will flash three times and then turn off to indicate Recirculation mode is not allowed.
- Continuous use of the Recirculation mode may make the inside air stuffy and window fogging may occur. Extended use of this mode is not recommended.
- In cold or damp weather, the use of the Recirculation mode will cause windows to fog on the inside because of moisture buildup inside the vehicle. For maximum defogging, select the outside air position.
- The A/C can be deselected manually without disturbing the mode control selection by pressing the A/C button.

Air Outlets

The airflow from each of the instrument panel outlets can be adjusted for direction, and turned on or off to control airflow.

NOTE: For maximum airflow to the rear, the center instrument panel outlets can be directed toward the rear seat passengers.

Economy Mode

If ECONOMY mode is desired, press the A/C button to turn off the LED indicator and the A/C compressor. Rotate the temperature control knob to the desired temperature.

Air Conditioning Operation

045632844

Push this button to engage the Air Conditioning (A/C). A LED will illuminate when the A/C system is engaged.

MAX A/C

045632845

For maximum cooling, when MAX A/C is selected the A/C is turned on automatically and the air is recirculated.

NOTE: A/C cannot be deselected when in MAX A/C position. The LED will blink three times if the A/C button is pushed.

Automatic Temperature Control (ATC) — If Equipped

- The Automatic Temperature Control (ATC) allows both driver and front passenger seat occupants to select individual comfort settings.

- When occupants in the vehicle select an Auto mode operation, Auto blower operation is set by using rotary knobs on the control unit and a comfort temperature setting by using the temperature up and down buttons.
- The system provides set-and-forget operation for optimum comfort and convenience.
- The system can be controlled manually, if desired.
- SYNC feature links the temperature controls, the passenger side temperature becomes the same as the temperature selected by the driver.

The ATC system automatically maintains the interior comfort level desired by the driver and all passengers.

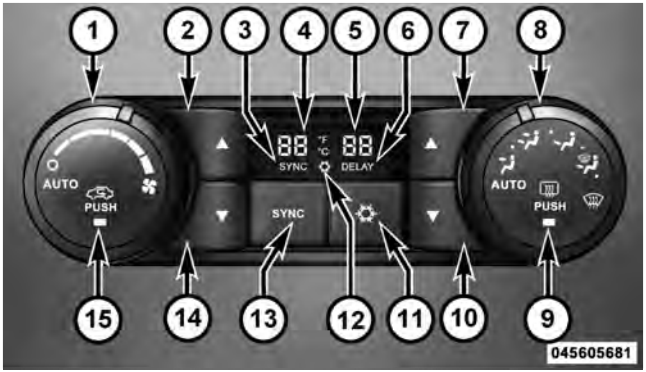

Automatic Temperature Control (ATC) Panel

1 - Blower Control
2 - Left Temperature Up
3 - SYNC Indicator
4 - Left Temperature Indicator
5 - Right Temperature Indicator
6 - DELAY Indicator
7 - Right Temperature Up
8 - MODE
9 - DEFROST
10 - Right Temperature Down
11 - A/C
12 - A/C Indicator
13 - SYNC Temperature Button
14 - Left Temperature Down
15 - RECIRCULATE

Automatic Operation

1. Position the MODE control knob to the Auto position on the Automatic Temperature Control (ATC) Panel.

2. Position the BLOWER control knob in the Auto position on the ATC Panel.

3. Next, adjust the temperature you would like the system to maintain by adjusting the driver and front passenger temperature buttons. Once the desired temperature is displayed, the system will achieve and automatically maintain that comfort level.

4. When the system is set up for your comfort level, it is not necessary to change the settings. You will experience the greatest efficiency by simply allowing the system to function automatically.

NOTE:

- It is not necessary to move the temperature settings for cold or hot vehicles. The system automatically adjusts the temperature, mode and fan speed to provide comfort as quickly as possible.
- The temperature can be displayed in U.S. or Metric units by selecting the US/M customer-programmable feature. Refer to the "Electronic Vehicle Information Center (EVIC) — Customer-Programmable Features (SETUP)" in this section of the manual.

To provide you with maximum comfort in the Automatic mode, during cold start-ups the blower fan will remain on low and the DELAY symbol will appear in the ATC display until the engine warms up. The blower will increase in speed and transition into Auto mode and DELAY will no longer be illuminated in the display. The blower will engage immediately if the Defrost mode is selected, or by adjusting the blower control knob and setting the fan to any fixed speed.

Manual Operation

This system offers a full complement of manual override features.

NOTE: Each of these features operate independently from each other. If any one feature is controlled manually, the temperature doors will continue to operate automatically.

045605986

Blower Control

There are six fixed blower speeds. Use this control to regulate the amount of air forced through the system in any mode you select. The blower speed increases as you move the control clockwise from the OFF position.

The blower fan speed can be set to any fixed speed by adjusting the blower control knob. The fan will now operate at a fixed speed until additional speeds are selected. This allows the front occupants to control the volume of air circulated in the vehicle and cancel the Auto mode.

The operator can also select the direction of the airflow by selecting one of the following positions.

Panel Mode

Air comes from the outlets in the instrument panel. Each of these outlets can be individually adjusted to direct the flow of air. The air vanes of the center outlets and outboard outlets can be rotated to regulate or shut off the airflow from these outlets.

Bi-Level Mode

Air comes from the instrument panel outlets, floor outlets and defrost outlets.

NOTE: In many temperature positions, the BI-LEVEL mode is designed to provide cooler air out of the panel outlets and warmer air from the floor outlets.

Floor Mode

Air comes from the floor outlets. A slight amount of air is directed through the defrost and side window demister outlets.

Mix Mode

Air comes from the floor, defrost and side window demist outlets. This mode works best in cold or snowy conditions. It allows you to stay comfortable while keeping the windshield clear.

Defrost Mode

Air comes from the windshield and side window demist outlets. Use Defrost mode with maximum blower and temperature settings for best windshield and side window defrosting.

NOTE: While operating in the other modes, the system will not automatically sense the presence of fog, mist or ice on the windshield. Defrost mode must be manually selected to clear the windshield and side glass.

The Air Conditioning (A/C) button allows the operator to manually activate or deactivate the air conditioning system. When in A/C mode and the ATC is set to a cool temperature, dehumidified air flows through the air outlets. If Economy mode is desired, press the A/C button to turn off the A/C mode in the ATC display and deactivate the A/C system.

NOTE:

- If the system is in Mix, Bi-Level or Defrost Mode, the A/C can be turned off, but the A/C system shall remain active to prevent fogging of the windows.
- If fog or mist appears on the windshield or side glass, select Defrost mode and increase blower speed.

Recirculation Control

When outside air contains smoke, odors, or high humidity, or if rapid cooling is desired, you may wish to recirculate interior air by pressing the RECIRCULATION control button.

Recirculation mode should only be used temporarily. The recirculation LED will illuminate on the blower control knob when this button is selected. Push the button a second time to turn off the Recirculation mode LED and allow outside air into the vehicle.

NOTE: In cold weather, use of Recirculation mode may lead to excessive window fogging. The Recirculation mode is not allowed in the Floor/Defrost Mix and Defrost modes to improve window clearing operation. Recirculation will be disabled automatically if these modes are selected.

Summer Operation

The engine cooling system in air conditioned vehicles must be protected with a high-quality antifreeze coolant to provide proper corrosion protection and to protect against engine overheating. A solution of 50% ethylene glycol antifreeze coolant and 50% water is recommended. Refer to “Maintenance Procedures” in “Maintaining Your Vehicle” for proper coolant selection.

Winter Operation

To ensure the best possible heater and defroster performance, make sure the engine cooling system is functioning properly and the proper amount, type, and concentration of coolant is used. Refer to “Maintenance Procedures” in “Maintaining Your Vehicle” for proper coolant selection. Use of the air Recirculation mode during Winter months is not recommended because it may cause window fogging.

Vacation/Storage

Any time you store your vehicle or keep it out of service (i.e., vacation) for two weeks or more, run the air conditioning system at idle for about five minutes in fresh air with the blower setting in high. This will ensure adequate system lubrication to minimize the possibility of compressor damage when the system is started again.

Window Fogging and Frosting

Vehicle windows tend to fog on the inside of the glass in mild, rainy and/or humid weather. Windows may frost on the inside of the glass in very cold weather. To clear the windows, select Defrost or Mix mode and increase the front blower speed. Do not use the Recirculation mode without A/C for long periods, as fogging may occur.

Outside Air Intake

Make sure the air intake, located directly in front of the windshield, is free of obstructions such as leaves. Leaves collected in the air intake may reduce airflow, can cause odor, and if they enter the plenum they could plug the water drains. In Winter months make sure the air intake is clear of ice, slush and snow.

Operating Tips

WEATHER	CONTROL SETTINGS
Hot weather and vehicle interior is very hot	Set the mode control to , on, and blower on high. Roll down the windows for a minute to flush out the hot air. Once comfort is achieved adjust controls for comfort.
Warm weather	Turn on and set the mode control to the position.
Cool Sunny	Operate in position.
Cool & Humid conditions	Set the mode control to and turn on to keep windows clear.
Cold Weather	Set the mode control to the position. If windshield fogging starts to occur, move the control towards the position.

8000cb71

STARTING AND OPERATING

CONTENTS

■ Starting Procedures 309

□ Normal Starting 309

□ Automatic Transmission 309

□ Extreme Cold Weather (Below –20°F Or −29°C) 310

□ If Engine Fails To Start 310

□ After Starting 311

■ Engine Block Heater — If Equipped 311

■ Automatic Transmission 312

□ Key Ignition Park Interlock 313

□ Brake/Transmission Shift Interlock System . . 313

□ Four–Speed Automatic Transmission – If Equipped 313

□ Five–Speed Automatic Transmission – If Equipped 318

■ Four-Wheel Drive Operation — If Equipped . . 325

□ Manually Shifted Transfer Case – If Equipped 325

- Shifting Procedure – Manually Shifted Transfer Case 328
- Transfer Case Position Indicator Light 329
- Electronically Shifted Transfer Case (Four-Position Switch) – If Equipped 329
- Shifting Procedure 333
- Electronically Shifted Transfer Case (Five-Position Switch) – If Equipped 336
- Shifting Procedure 340

■ Axle Locker System (2500 Models Only) — If Equipped 342

■ Stabilizer/Sway Bar System — Power Wagon Only 344

■ Safe Off-Road Driving — Power Wagon Only 347

- Off-Road Driving Tips And Vehicle Characteristics 347
- Driving In Snow, Mud And Sand 350
- Crossing Obstacles (Rocks And Other High Points) 351
- Hill Climbing 354
- Driving Through Water 356
- Airing Down For Off-Road Driving 359
- Vehicle Recovery 360
- After Driving Off-Road 363

■ Limited-Slip Differential 365

■ Driving On Slippery Surfaces 365

- Acceleration 365
- Traction 366

■ Driving Through Water 366
□ Flowing/Rising Water 367
□ Shallow Standing Water 367
■ Off-Road Driving Tips 369
□ After Driving Off-Road 369
■ Winch Usage (Power Wagon Only) — If Equipped 370
□ Things To Know Before Using Your Winch . . 370
□ Understanding The Features Of Your Winch 372
□ Winch Accessories 374
□ Operating Your Winch 375
□ Rigging Techniques 388
■ Power Steering 390
□ Power Steering Fluid Check 391
■ Multi-Displacement System (MDS) (If Equipped) — 5.7L Engine Only 392
■ Parking Brake 392
■ Brake System 394
□ 3500 Dual Rear Wheel Models Only 394
■ Electronic Brake Control System 395
□ Anti-Lock Brake System (ABS) 395
□ Traction Control System (TCS) – If Equipped 396
□ Brake Assist System (BAS) – If Equipped . . . 396
□ Hill Start Assist (HSA) – If Equipped 397
□ Electronic Stability Control (ESC) – If Equipped 400

- ESC Activation/Malfunction Indicator Light And ESC Off Indicator Light 403
- Trailer Sway Control (TSC) – If Equipped . . . 405

■ Tire Safety Information 406
- Tire Markings 406
- Tire Identification Number (TIN) 409
- Tire Terminology And Definitions 410
- Tire Loading And Tire Pressure 411

■ Tires — General Information 415
- Tire Pressure 415
- Tire Inflation Pressures 416
- Tire Pressures For High Speed Operation . . . 417
- Radial Ply Tires 418
- Spare Tire Matching Original Equipped Tire And Wheel – If Equipped 419
- Compact Spare Tire – If Equipped 419
- Full Size Spare – If Equipped 420
- Limited-Use Spare – If Equipped 420
- Tire Spinning 421
- Tread Wear Indicators 422
- Life Of Tire 422
- Replacement Tires 423

■ Supplemental Tire Pressure Information — If Equipped 424

■ Tire Chains 425

■ Snow Tires 427

■ Tire Rotation Recommendations 428

□ Directional Tires – If Equipped 429
□ Dual Rear Wheels 429
■ Tire Pressure Monitor System (TPMS) 430
□ Base System 433
□ Premium System – If Equipped 435
□ Tire Pressure Monitor System (TPMS) Tire Light Load Inflation Switch Description (2500 Models) – If Equipped 439
□ General Information 442
■ Fuel Requirements 443
□ 3.7L And 4.7L Engine 443
□ 5.7L Engine 443
□ Reformulated Gasoline 444
□ Gasoline/Oxygenate Blends 444
□ E-85 Usage In Non-Flex Fuel Vehicles 445
□ MMT In Gasoline 445
□ Materials Added To Fuel 446
□ Fuel System Cautions 446
□ Carbon Monoxide Warnings 447
■ Flexible Fuel (4.7L Engine Only) — If Equipped 448
□ E-85 General Information 448
□ Ethanol Fuel (E-85) 449
□ Fuel Requirements 449
□ Selection Of Engine Oil For Flexible Fuel Vehicles (E-85) And Gasoline Vehicles 450
□ Starting 450
□ Cruising Range 451

- Replacement Parts 451
- Maintenance 451

■ Adding Fuel 452
- Loose Fuel Filler Cap Message 453

■ Vehicle Loading 453
- Certification Label 453

■ Trailer Towing 456
- Common Towing Definitions 456
- Trailer Hitch Classification 460
- Trailer Towing Weights (Maximum Trailer Weight Ratings) 461
- Trailer And Tongue Weight 462
- Towing Requirements 463
- Towing Tips 472

■ Snowplow 474
- 1500 Models Only 474
- 2500/3500 Models Only 474

■ Recreational Towing (Behind Motorhome, Etc.) 478
- Towing This Vehicle Behind Another Vehicle 478
- Recreational Towing – Two-Wheel Drive Models 479
- Recreational Towing – Four-Wheel Drive Models 479

STARTING PROCEDURES

Before starting your vehicle, adjust your seat, adjust both inside and outside mirrors, and fasten your seat belt.

The starter should not be operated for more than 15-second intervals. Waiting a few seconds between such intervals will protect the starter from overheating.

WARNING!

Never leave children alone in a vehicle. Leaving unattended children in a vehicle is dangerous for a number of reasons. A child or others could be seriously or fatally injured. Do not leave the key fob in the ignition. A child could operate power windows, other controls, or move the vehicle.

Normal Starting

Normal starting of either a warm or cold engine is obtained without pumping or pressing the accelerator pedal. Turn the key fob to the START position and release when the engine starts. If the engine fails to start within 10 seconds, turn the key fob to the OFF position, wait five seconds, then repeat the "Normal Starting" procedure.

Automatic Transmission

Start the engine with the shift lever in the NEUTRAL or PARK position. Apply the brake before shifting into any driving range.

NOTE: This vehicle is equipped with a transmission shift interlocking system. The brake pedal must be pressed to shift out of PARK.

Tip Start Feature

Do not press the accelerator. Turn the ignition switch briefly to the START position and release it. The starter motor will continue to run but will automatically disengage when the engine is running.

Extreme Cold Weather (Below –20°F or −29°C)

To ensure reliable starting at these temperatures, use of an externally powered electric engine block heater (available from your authorized dealer) is recommended.

If Engine Fails To Start

If the engine fails to start after you have followed the "Normal Starting" procedure, it may be flooded. Push the accelerator pedal all the way to the floor and hold it there while cranking the engine. This should clear any excess fuel in case the engine is flooded.

CAUTION!

To prevent damage to the starter, do not crank the engine for more than 15 seconds at a time. Wait 10 to 15 seconds before trying again.

WARNING!

- **Never pour fuel or other flammable liquids into the throttle body air inlet opening in an attempt to start the vehicle. This could result in a flash fire causing serious personal injury.**
- **Do not attempt to push or tow your vehicle to get it started. Vehicles equipped with an automatic transmission cannot be started this way. Unburned fuel could enter the catalytic converter and once the engine has started, ignite and damage the converter and vehicle.**
- **If the vehicle has a discharged battery, booster cables may be used to obtain a start from a booster battery or the battery in another vehicle. This type of start can be dangerous if done improperly. Refer to "Jump Starting" in "What To Do In Emergencies" for further information.**

If the engine has been flooded, it may start to run, but not have enough power to continue running when the key fob is released. If this occurs, continue cranking with the accelerator pedal pushed all the way to the floor. Release the accelerator pedal and the key fob once the engine is running smoothly.

If the engine shows no sign of starting after two 15-second periods of cranking with the accelerator pedal held to the floor, the "Normal Starting" procedure should be repeated.

After Starting

The idle speed is automatically controlled and will decrease as the engine warms up.

ENGINE BLOCK HEATER — IF EQUIPPED

The engine block heater warms the engine, and permits quicker starts in cold weather. Connect the cord to a standard 110-115 Volt AC electrical outlet with a grounded, three-wire extension cord.

1500 Models

The engine block heater cord is routed under the hood on the passenger side of the vehicle near the right head lamp assembly. It is located between the front grill and the radiator, but underneath the black upper seal.

2500/3500 Models

The engine block heater cord is routed through the grille by the right front tow hook.

It includes a removable cap that is secured by a tethered strap. It also has a c-clip that is used for storage when not in use for the winter months. During winter months, remove the heater cord wiring assembly from itself on the c-clip.

The engine block heater must be plugged in at least one hour to have an adequate warming effect on the engine.

WARNING!

Remember to disconnect the engine block heater cord before driving. Damage to the 110-115 Volt electrical cord could cause electrocution.

AUTOMATIC TRANSMISSION

CAUTION!

Damage to the transmission may occur if the following precautions are not observed:

- **Shift into PARK only after the vehicle has come to a complete stop.**
- **Shift into or out of REVERSE only after the vehicle has come to a complete stop and the engine is at idle speed.**

(Continued)

CAUTION! (Continued)

- **Do not shift from REVERSE, PARK, or NEUTRAL into any forward gear when the engine is above idle speed.**
- **Before shifting into any gear, make sure your foot is firmly on the brake pedal.**

WARNING!

It is dangerous to move the shift lever out of PARK or NEUTRAL if the engine speed is higher than idle speed. If your foot is not firmly on the brake pedal, the vehicle could accelerate quickly forward or in reverse. You could lose control of the vehicle and hit someone or something. Only shift into gear when the engine is idling normally and when your right foot is firmly on the brake pedal.

Key Ignition Park Interlock

This vehicle is equipped with a Key Ignition Park Interlock which requires the shift lever to be placed in PARK prior to turning the key fob to the LOCK position. The key fob can only be removed from the ignition switch when the ignition is in the LOCK position. Once the key fob is removed, the shift lever is locked in PARK.

Brake/Transmission Shift Interlock System

This vehicle is equipped with a Brake Transmission Shift Interlock System (BTSI) that holds the shift lever in the PARK position when the ignition switch is in the LOCK position. To move the shift lever out of the PARK position, the ignition switch must be turned to any other switch position (ACC, ON, or START) (engine running or not) and the brake pedal must be pressed.

Four–Speed Automatic Transmission – If Equipped

NOTE: Under extremely cold temperatures (-6°F (-21°C) and when in DRIVE, transmission operation may be briefly limited to only second gear operation. Normal operation will resume once the transmission temperature has risen to a suitable level.

Shifting from DRIVE to PARK or REVERSE should be done only after the accelerator pedal is released and the vehicle is stopped. Be sure to keep your foot on the brake when moving the shift lever between these gears.

Gear Ranges

Do not race the engine when shifting from PARK or NEUTRAL position into another gear range.

PARK

This range supplements the parking brake by locking the transmission. The engine can be started in this range. Never use PARK while the vehicle is in motion. Apply the parking brake when leaving the vehicle in this range. Always apply the parking brake first, then place the shift lever in the PARK position.

WARNING!

- **Never use the PARK position as a substitute for the parking brake. Always apply the parking brake fully when parked to guard against vehicle movement and possible injury or damage.**
- **It is dangerous to move the shift lever out of PARK or NEUTRAL if the engine speed is higher than idle speed. If your foot is not firmly on the brake pedal, the vehicle could accelerate quickly forward or in reverse. You could lose control of the vehicle and hit someone or something. Only shift into gear when the engine is idling normally and when your right foot is firmly on the brake pedal.**

(Continued)

WARNING! (Continued)

- **Unintended movement of a vehicle could injure those in and near the vehicle. As with all vehicles, you should never exit a vehicle while the engine is running. Before exiting a vehicle, you should always shift the transmission into PARK, remove the key fob from the ignition, and apply the parking brake. Once the key fob is removed from the ignition, the shift lever is locked in the PARK position, securing the vehicle against unwanted movement. Furthermore, you should never leave unattended children inside a vehicle.**

REVERSE

This range is for moving the vehicle rearward. Use this range only after the vehicle has come to a complete stop.

NEUTRAL

This range is used when the vehicle is standing for prolonged periods with the engine running. The engine may be started in this range. Set the parking brake and shift the transmission into PARK if you must leave the vehicle.

NOTE: Towing the vehicle, coasting, or driving for any other reason with shift lever in NEUTRAL can result in severe transmission damage. Refer to “Recreational Towing” in “Starting and Operating” and “Towing a Disabled Vehicle” in “What To Do In Emergencies” for further information.

DRIVE

This range is for most city and highway driving.

Overdrive Operation

The Overdrive automatic transmission contains an electronically controlled fourth gear (OVERDRIVE). The

transmission will automatically shift from third gear to OVERDRIVE if the following conditions are present:

- the shift lever is in DRIVE
- the engine coolant has reached normal operating temperature
- vehicle speed is above approximately 30 mph (48 km/h)
- the TOW/HAUL switch has not been activated
- the transmission has reached normal operating temperature

NOTE: If the vehicle is started in extremely cold temperatures, the transmission may not shift into OVERDRIVE and will automatically select the most desirable gear for operation at this temperature. Normal operation will resume when the transmission fluid temperature has risen to a suitable level.

If the transmission temperature gets extremely hot, the transmission will automatically select the most desirable gear for operation at this temperature. If the transmission temperature becomes hot enough, the "Transmission Temperature Warning Light" may illuminate and the transmission may downshift out of OVERDRIVE until the transmission cools down. After the transmission cools down, the transmission will resume normal operation.

The transmission will downshift from OVERDRIVE to DRIVE if the accelerator pedal is fully pressed at vehicle speeds above approximately 35 mph (56 km/h).

When To Use TOW/HAUL Mode

When driving in hilly areas, towing a trailer, carrying a heavy load, etc., and frequent transmission shifting occurs, press the TOW/HAUL switch. This will improve performance and reduce the potential for transmission overheating or failure due to excessive shifting. When

operating in TOW/HAUL mode, the transmission will shift to third gear and fourth gear will be enabled under steady cruise conditions.

TOW/HAUL Switch

The "TOW/HAUL Indicator Light" will illuminate in the instrument cluster to indicate when the switch has been activated. Pressing the switch a second time restores normal operation. If the TOW/HAUL mode is desired, the switch must be pressed each time the engine is started.

Transmission Limp Home Mode

Transmission function is monitored for abnormal conditions. If a condition is detected that could result in transmission damage, the Transmission Limp Home Mode will be engaged. In this mode, the transmission will operate (when in DRIVE) in second gear only.

To reset the transmission, use the following procedure:

1. Stop the vehicle.

2. Move the shift lever to the PARK position.

3. Turn OFF the engine and be sure to turn the key fob to the LOCK position.

4. Wait approximately 10 seconds, then restart the engine.

5. Move the shift lever to the desired gear range.

If the problem is no longer detected, the transmission will return to normal operation. If the problem persists, PARK, REVERSE, and NEUTRAL will continue to operate. Only second gear will operate in the DRIVE position. Have the transmission checked at your authorized dealer as soon as possible.

Torque Converter Clutch

A feature designed to improve fuel economy has been added to the automatic transmission of this vehicle. A clutch within the torque converter engages automatically at calibrated speeds. This may result in a slightly different feeling or response during normal operation in high gear. When the vehicle speed drops or during acceleration, the clutch automatically and smoothly disengages.

Five–Speed Automatic Transmission – If Equipped

The shift lever display located in the instrument panel cluster indicates the transmission gear range. The shift lever is mounted either on the right side of the steering column (if equipped) or on the floor console (if equipped). You must press the brake pedal to move the shift lever out of the PARK position. To drive, move the shift lever from PARK or NEUTRAL to the DRIVE position. Pull the shift lever toward you when shifting into REVERSE or PARK, or when shifting out of PARK (Column Shift Only).

Electronic Range Select (ERS) Operation

The Electronic Range Select (ERS) shift control allows you to limit the highest available gear when the shift lever is in the DRIVE position. Move the console shift lever left (-) or right (+), or toggle the switch on the column shift lever down (-) or up (+) to select the desired top gear. For example, if the driver shifts the transmission

into 3 (third gear), the transmission will never shift above third gear, but can shift down to 2 (second gear) or 1 (first gear), when needed.

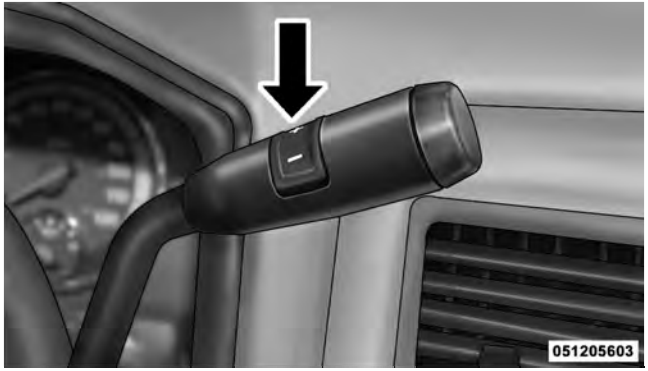

Column Shift Lever

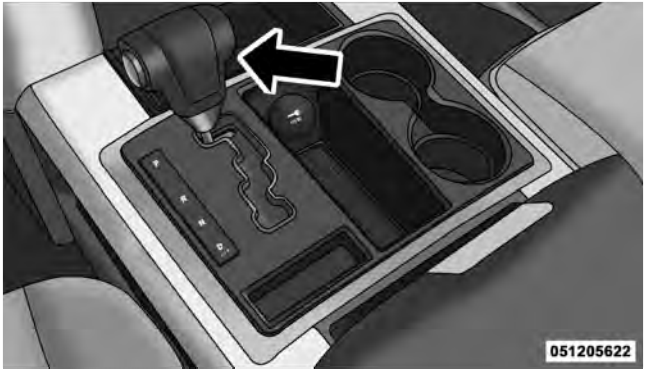

Console Shift Lever

On vehicles equipped with 4.7L or 5.7L engines, use of ERS (or TOW/HAUL mode) also enables an additional underdrive gear which is not normally used during through-gear accelerations. This additional gear improves vehicle performance and cooling capability when towing a trailer on certain grades. In ERS mode, first

through third gear are underdrive gears, and fourth gear is direct drive. ERS fifth gear (Overdrive) is the same as the normal fourth gear.

When in the DRIVE position in first through fourth gear, the first tap down (-), will display the ERS designation for the current gear (the transmission will not downshift). For example, if you are in DRIVE and are in third (direct) gear, when you tap the shift lever/switch one time in the (-) direction, the display will show 4 (ERS 4 is direct gear). Another tap down (-) will shift the transmission down to ERS 3 (the added underdrive gear). When in the DRIVE position in fifth gear, the first tap down (-) will downshift the transmission and display 5 (ERS 5 is the same as normal fourth gear). Another tap down (-) will shift the transmission down to ERS 4 (direct gear).

To exit ERS mode, press and hold the shift lever/switch in the (+) position until "D" is once again highlighted in the instrument cluster display.

WARNING!

Do not downshift for additional engine braking on a slippery surface. The drive wheels could lose their grip and the vehicle could skid.

Screen Display	**1**	**2**	**3**	**4**	**5***	**D**
Actual Gear(s) Allowed	1	1-2	1-3	1-4	1-5	1-5

*** Applies to vehicles equipped with 4.7L and 5.7L engines only.**

NOTE: To select the proper gear position for maximum deceleration (engine braking), hold the shift lever/switch in the (-) position continuously while braking. The transmission will shift to the range from which the vehicle can best be slowed down.

Gear Ranges

Do not race the engine when shifting from PARK or NEUTRAL position into another gear range.

PARK

This range supplements the parking brake by locking the transmission. The engine can be started in this range. Never use PARK while the vehicle is in motion. Apply the parking brake when leaving the vehicle in this range. Always apply the parking brake first, then place the shift lever in the PARK position. On four-wheel drive vehicles, be sure that the transfer case is in a DRIVE position.

WARNING!

- **Never use the PARK position as a substitute for the parking brake. Always apply the parking brake fully when parked to guard against vehicle movement and possible injury or damage.**

(Continued)

WARNING! (Continued)

- **Your vehicle could move and injure you and others if it is not completely in PARK. Check by trying to move the shift lever back and forth without first pulling it toward you after you have set it in PARK. Make sure it is in PARK before leaving the vehicle.**
- **It is dangerous to move the shift lever out of PARK or NEUTRAL if the engine speed is higher than idle speed. If your foot is not firmly on the brake pedal, the vehicle could accelerate quickly forward or in reverse. You could lose control of the vehicle and hit someone or something. Only shift into gear when the engine is idling normally and when your foot is firmly on the brake pedal.**

(Continued)

WARNING! (Continued)

- **Unintended movement of a vehicle could injure those in and near the vehicle. As with all vehicles, you should never exit a vehicle while the engine is running. Before exiting a vehicle, you should always shift the transmission into PARK, remove the key fob from the ignition, and apply the parking brake. Once the key fob is removed from the ignition, the shift lever is locked in the PARK position, securing the vehicle against unwanted movement. Furthermore, you should never leave unattended children inside a vehicle.**

REVERSE

This range is for moving the vehicle rearward. Use this range only after the vehicle has come to a complete stop.

NEUTRAL

This range is for when the vehicle is standing for prolonged periods with the engine running. The engine may be started in this range. Set the parking brake and shift the transmission into PARK if you must leave the vehicle.

DRIVE

This range provides all forward gears, including third gear direct and fourth or fifth gear overdrive (Refer to Overdrive Operation). Use this range for most city and highway driving.

Overdrive Operation

The Overdrive automatic transmission contains an electronically controlled fourth and fifth gear (Overdrive). The transmission will automatically shift from DRIVE to Overdrive if the following conditions are present:

- the shift lever is in DRIVE;
- the engine coolant (antifreeze) has reached normal operating temperature;
- vehicle speed is above approximately 30 mph (48 km/h);
- the TOW/HAUL switch has not been activated;
- transmission has reached normal operating temperature.

NOTE: If the vehicle is started in extremely cold temperatures, the transmission may not shift into Overdrive and will automatically select the most desirable gear for operation at this temperature. Normal operation will resume when the transmission fluid temperature has risen to a suitable level.

If the transmission temperature gets extremely hot, the transmission will automatically select the most desirable gear for operation at this temperature. If the transmission temperature becomes hot enough, the "Transmission Temperature Warning Light" may illuminate and the transmission may downshift out of Overdrive until the transmission cools down. After cool down, the transmission will resume normal operation.

The transmission will downshift from Overdrive to DRIVE if the accelerator pedal is fully pressed at vehicle speeds above approximately 35 mph (56 km/h).

When To Use TOW/HAUL Mode

When driving in hilly areas, towing a trailer, carrying a heavy load, etc., and frequent transmission shifting occurs, press the TOW/HAUL switch. This will improve

performance and reduce the potential for transmission overheating or failure due to excessive shifting. When operating in the TOW/HAUL mode, fifth gear is disabled and 2-3 and 3-4 shift patterns are modified.

TOW/HAUL Switch

Shifts into Overdrive (fourth gear) are allowed during steady cruise (for improved fuel economy) and automatic closed-throttle downshifts to third gear are performed (for improved braking) when driving conditions warrant.

The "TOW/HAUL Indicator Light" will illuminate in the instrument cluster to indicate when the switch has been activated. Pressing the switch a second time restores normal operation. If the TOW/HAUL mode is desired, the button must be pressed each time the engine is started.

Torque Converter Clutch

A feature designed to improve fuel economy has been included in the automatic transmission on your vehicle. A clutch within the torque converter engages automatically at calibrated speeds. This may result in a slightly different feeling or response during normal operation in the upper gears. When the vehicle speed drops or during acceleration when the transmission downshifts to second gear, the clutch automatically disengages.

NOTE:

- The torque converter clutch will not engage until the transmission fluid and engine coolant (antifreeze) are warm [usually after 1 to 3 miles (1.6 to 4.8 km) of driving]. Because the engine speed is higher when the torque converter clutch is not engaged, it may seem as if the transmission is not shifting into Overdrive when cold. This is normal. Pressing the TOW/HAUL switch when the transmission is sufficiently warm will demonstrate that the transmission is able to shift into and out of Overdrive.

- If the vehicle has not been driven in several days, the first few seconds of operation after shifting the transmission into gear may seem sluggish. This is due to the fluid partially draining from the torque converter into the transmission. This condition is normal and will not cause damage to the transmission. The torque converter will refill within five seconds after starting the engine.

FOUR-WHEEL DRIVE OPERATION — IF EQUIPPED

Four-wheel drive trucks are equipped with either a manually shifted transfer case or an electronically shifted transfer case. Refer to the operating instructions for your transfer case, located in this section for further information.

Manually Shifted Transfer Case – If Equipped

The transfer case provides four mode positions.

- Two-wheel drive high range (2H)
- Four-wheel drive high range (4H)
- Neutral (N)
- Four-wheel drive low range (4L)

This transfer case is intended to be driven in the 2H position for normal street and highway conditions such as dry, hard surfaced roads.

When additional traction is required, the 4H and 4L positions can be used to lock the front and rear driveshafts together and force the front and rear wheels to rotate at the same speed. This is accomplished by simply moving the shift lever to the desired positions. The 4H and 4L positions are intended for loose, slippery road surfaces only. Driving in the 4H and 4L positions on dry, hard surfaced roads may cause increased tire wear and damage to the driveline components.

The "Transfer Case Position Indicator Light" in the instrument cluster will alert the driver that the vehicle is in four-wheel drive and that the front and rear driveshafts are locked together. This light will illuminate when the transfer case is shifted into either the 4H or 4L position. There is no light for the 2H or NEUTRAL positions.

When operating your vehicle in 4L, the engine speed is approximately three times that of the 2H or 4H positions at a given road speed. Take care not to overspeed the engine and do not exceed 25 mph (40 km/h).

Proper operation of four-wheel drive vehicles depends on tires of equal size, type and circumference on each wheel. Any difference will adversely affect shifting and can cause damage to the drivetrain.

NOTE: Do not attempt to make a shift while only the front or rear wheels are spinning. The transfer case is not equipped with a synchronizer and therefore the front and rear driveshaft speeds must be equal for the shift to take place. Shifting while only the front or rear wheels are spinning can cause damage to the transfer case.

Because four-wheel drive provides improved traction, there is a tendency to exceed safe turning and stopping speeds. Do not go faster than road conditions permit.

NOTE: Delayed shifts out of four-wheel drive may be experienced due to uneven tire wear, low or uneven tire pressures, excessive vehicle loading, or cold temperatures.

WARNING!

You or others could be injured if you leave the vehicle unattended with the transfer case in the NEUTRAL position without first fully engaging the parking brake. The transfer case NEUTRAL position disengages both the front and rear driveshafts from the powertrain and will allow the vehicle to move regardless of the transmission position. The parking brake should always be applied when the driver is not in the vehicle.

For additional information on the appropriate use of each transfer case mode position, see the information below:

2H

Rear-Wheel Drive High Range - This range is for normal street and highway driving on dry hard surfaced roads.

4H

Four-Wheel Drive High Range - This range locks the front and rear driveshafts together forcing the front and rear wheels to rotate at the same speed. Additional traction for loose, slippery road surfaces only.

N

Neutral - This range disengages the front and rear driveshafts from the powertrain. To be used for flat towing behind another vehicle. Refer to “Recreational Towing” in “Starting and Operating” for further information.

4L

Four-Wheel Drive Low Range - This range locks the front and rear driveshafts together forcing the front and rear wheels to rotate at the same speed. Additional traction and maximum pulling power for loose, slippery road surfaces only. Do not exceed 25 mph (40 km/h).

Shifting Procedure – Manually Shifted Transfer Case

2H ⇔ 4H

Shifting between 2H and 4H can be made with the vehicle stopped or in motion. If the vehicle is in motion, shifts can be made up to 55 mph (88 km/h). With the vehicle in motion, the transfer case will engage/disengage faster if you momentarily release the accelerator pedal after completing the shift. Apply a constant force when shifting the transfer case lever.

2H Or 4H ⇔ 4L

With the vehicle rolling at 2 to 3 mph (3 to 5 km/h), shift the transmission into NEUTRAL. While the vehicle is coasting at 2 to 3 mph (3 to 5 km/h), shift the transfer case lever firmly to the desired position. Do not pause in transfer case NEUTRAL.

NOTE:

- Pausing in transfer case NEUTRAL in vehicles equipped with an automatic transmission may require shutting the engine OFF to avoid gear clash while completing the shift. If difficulty occurs, shift the transmission into NEUTRAL, hold foot on brake, and turn the engine OFF. Make shift to the desired mode.
- Shifting into or out of 4L is possible with the vehicle completely stopped, however difficulty may occur due to the mating clutch teeth not being properly aligned. Several attempts may be required for clutch teeth alignment and shift completion to occur. The preferred

method is with the vehicle rolling 2 to 3 mph (3 to 5 km/h). Avoid attempting to engage or disengage 4L with the vehicle moving faster than 2 to 3 mph (3 to 5 km/h).

- Do not attempt to shift into or from 4L while the transmission is in gear.

Transfer Case Position Indicator Light

The "Transfer Case Position Indicator Light" in the instrument cluster is used to alert the driver that the front axle is fully engaged and all four wheels are driving.

Electronically Shifted Transfer Case (Four-Position Switch) – If Equipped

This is an electronic shift transfer case and is operated by the 4WD Control Switch (Transfer Case Switch), which is located on the instrument panel.

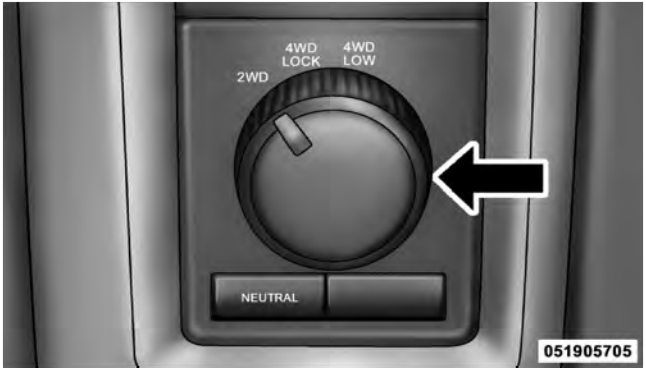

Transfer Case Switch (Four-Position)

This electronically shifted transfer case provides four mode positions:

- Two-wheel drive high range (2WD)
- Four-wheel drive lock range (4WD LOCK)
- Four-wheel drive low range (4WD LOW)
- Neutral (NEUTRAL)

This electronically shifted transfer case is designed to be driven in the two-wheel drive position (2WD) for normal street and highway conditions on dry, hard surfaced roads.

When additional traction is required, the transfer case 4WD LOCK and 4WD LOW positions can be used to lock the front and rear driveshafts together, forcing the front and rear wheels to rotate at the same speed. This is accomplished by rotating the 4WD Control Switch to the desired position. Refer to "Shifting Procedure" in this section for specific shifting instructions. The 4WD LOCK and 4WD LOW positions are designed for loose, slippery road surfaces only. Driving in the 4WD LOCK and 4WD LOW positions on dry hard surfaced roads may cause increased tire wear and damage to the driveline components.

NOTE: The transfer case NEUTRAL position is selected by pressing the recessed button located on the lower left hand corner of the 4WD Control Switch. The transfer case NEUTRAL position is to be used for recreational towing only. Refer to "Recreational Towing" in "Starting and Operating" for further information.

Transfer Case Position Indicator Lights

The Transfer Case Position Indicator Lights (4WD and 4LOW) are located in the instrument cluster and indicate the current and desired transfer case selection. When you select a different transfer case position, the indicator lights will do the following:

If All Shift Conditions Are Met:

1. The current position indicator light will turn OFF.

2. The selected position indicator light will flash until the transfer case completes the shift.

3. When the shift is complete, the indicator light for the selected position will stop flashing and remain ON.

If One Or More Shift Conditions Are Not Met:

1. The indicator light for the current position will remain ON.

2. The newly selected position indicator light will continue to flash.

3. The transfer case **will not** shift.

NOTE: Before retrying a selection, make certain that all the necessary requirements for selecting a new transfer case position have been met. To retry the selection, turn the control knob back to the current position, wait five seconds, and retry selection. To find the shift requirements, refer to the "Shifting Procedure" for your transfer case, located in this section.

The "SVC 4WD Warning Light" monitors the electronic shift four-wheel drive system. If this light remains on after engine start up or illuminates during driving, it means that the four-wheel drive system is not functioning properly and that service is required.

WARNING!

Always engage the parking brake when powering down the vehicle if the "SVC 4WD Warning Light" is illuminated. Not engaging the parking brake may allow the vehicle to roll, which may cause personal injury.

NOTE: Do not attempt to make a shift while only the front or rear wheels are spinning, as this can cause damage to driveline components.

When operating your vehicle in 4WD LOW, the engine speed is approximately three times that of the 2WD or 4WD LOCK positions at a given road speed. Take care not to overspeed the engine and do not exceed 25 mph (40 km/h).

Proper operation of four-wheel drive vehicles depends on tires of equal size, type and circumference on each wheel. Any difference in tire size can cause damage to the drivetrain.

Because four-wheel drive provides improved traction, there is a tendency to exceed safe turning and stopping speeds. Do not go faster than road conditions permit.

WARNING!

You or others could be injured if you leave the vehicle unattended with the transfer case in the NEUTRAL position without first fully engaging the parking brake. The transfer case NEUTRAL position disengages both the front and rear driveshafts from the powertrain and will allow the vehicle to move regardless of the transmission position. The parking brake should always be applied when the driver is not in the vehicle.

For additional information on the appropriate use of each transfer case mode position, see the information below:

2WD

Rear Wheel Drive High Range - This range is for normal street and highway driving on dry, hard surfaced roads.

4WD LOCK

Four-Wheel Drive Lock Range - This range locks the front and rear driveshafts together forcing the front and rear wheels to rotate at the same speed. This range provides additional traction for loose, slippery road surfaces only.

4WD LOW

Four-Wheel Drive Low Range - This range provides low speed four-wheel drive. It locks the front and rear driveshafts together forcing the front and rear wheels to rotate at the same speed. This range provides additional traction and maximum pulling power for loose, slippery road surfaces only. Do not exceed 25 mph (40 km/h).

N

Neutral - This range disengages both the front and rear driveshafts from the powertrain. To be used for flat towing behind another vehicle. Refer to "Recreational Towing" in "Starting and Operating" for further information.

Shifting Procedure

NOTE:

- If any of the requirements to select a new transfer case position have not been met, the transfer case will not shift. The position indicator light for the previous position will remain ON and the newly selected position indicator light will continue to flash until all the requirements for the selected position have been met. To retry a shift: return the control knob back to the original position, make certain all shift requirements have been met, wait five seconds and try the shift again.
- If all the requirements to select a new transfer case position have been met, the current position indicator light will turn OFF, the selected position indicator light will flash until the transfer case completes the shift. When the shift is complete, the position indicator light for the selected position will stop flashing and remain ON.

2WD⇔ 4WD LOCK

Rotate the 4WD control switch to the desired position. Shifts between 2WD and 4WD LOCK can be done with the vehicle stopped or in motion. With the vehicle in motion, the transfer case will engage/disengage faster if you momentarily release the accelerator pedal after turning the control switch. If the vehicle is stopped, the ignition switch must be in the ON position with the engine either running or off. This shift cannot be completed if the ignition switch is in the ACC position.

NOTE: The four-wheel drive system will not allow shifts between 2WD/4WD LOCK if the front and/or rear wheels are spinning (no traction). In this situation, the selected position indicator light will flash and the original position indicator light will remain ON. At this time, reduce speed and stop spinning the wheels to complete the shift.

2WD Or 4WD LOCK⇔ 4WD LOW

NOTE: When shifting into or out of 4WD LOW some gear noise may be heard. This noise is normal and is not detrimental to the vehicle or occupants.

Shifting can be performed with the vehicle rolling 2 to 3 mph (3 to 5 km/h) or completely stopped. You can use either of the following procedures:

Preferred Procedure

1. With the engine running, slow the vehicle to 2 to 3 mph (3 to 5 km/h).

2. Shift the transmission into NEUTRAL.

3. While still rolling, rotate the transfer case control switch to the desired position.

4. After the desired position indicator light is ON (not flashing), shift the transmission back into gear.

Alternate Procedure

1. Bring the vehicle to a complete stop.

2. With the ignition switch in the ON position and the engine either OFF or running, shift the transmission into NEUTRAL.

3. Rotate the transfer case control switch to the desired position.

4. After the desired position indicator light is ON (not flashing), shift the transmission back into gear.

NOTE:

- If Steps 1 or 2 of either the Preferred or Alternate Procedure are not satisfied prior to attempting the shift, then the desired position indicator light will flash continuously while the original position indicator light is ON, until all requirements have been met.
- The ignition switch must be in the ON position for a shift to take place and for the position indicator lights to be operable. If the ignition switch is not in the ON position, the shift will not take place and no position indicator lights will be on or flashing.

Electronically Shifted Transfer Case (Five-Position Switch) – If Equipped

This is an electronic shift transfer case and is operated by the 4WD Control Switch (Transfer Case Switch), which is located on the instrument panel.

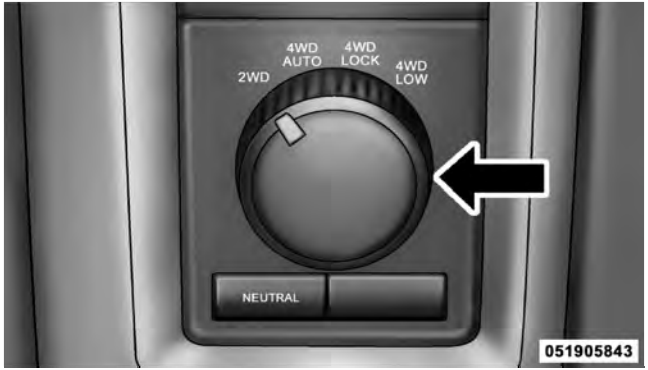

Transfer Case Switch (Five–Position)

This electronically shifted transfer case provides five mode positions:

- Two-wheel drive high range (2WD)
- Four-wheel drive automatic range (4WD AUTO)
- Four-wheel drive lock range (4WD LOCK)
- Four-wheel drive low range (4WD LOW)
- Neutral (NEUTRAL)

This electronically shifted transfer case is designed to be driven in the two–wheel drive position (2WD) or four-wheel drive position (4WD AUTO) for normal street and highway conditions on dry hard surfaced roads). Driving the vehicle in 2WD will have greater fuel economy benefits as the front axle is not engaged in 2WD.

For variable driving conditions, the 4WD AUTO mode can be used. In this mode, the front axle is engaged, but the vehicle's power is sent to the rear wheels. Four-wheel

drive will be automatically engaged when the vehicle senses a loss of traction. Because the front axle is engaged, this mode will result in lower fuel economy than the 2WD mode.

When additional traction is required, the transfer case 4WD LOCK and 4WD LOW positions can be used to lock the front and rear driveshafts together forcing the front and rear wheels to rotate at the same speed. This is accomplished by rotating the 4WD Control Switch to the desired position. Refer to "Shifting Procedure" for specific shifting instructions. The 4WD LOCK and 4WD LOW positions are designed for loose, slippery road surfaces only. Driving in the 4WD LOCK and 4WD LOW positions on dry hard surfaced roads may cause increased tire wear and damage to the driveline components.

NOTE: The transfer case NEUTRAL position is selected by depressing the recessed button located on the lower left hand corner of the 4WD Control Switch. The transfer case NEUTRAL position is to be used for recreational towing only. Refer to "Recreational Towing" in "Starting and Operating" for further information.

Transfer Case Position Indicator Lights

The Transfer Case Position Indicator Lights (4WD, 4LOW, and 4WD AUTO) are located on the instrument cluster and indicate the current and desired transfer case selection. When you select a different transfer case position, the position indicator lights will do the following:

If All Shift Conditions Are Met:

1. The current position indicator light will turn OFF.

2. The selected position indicator light will flash until the transfer case completes the shift.

3. When the shift is complete, the indicator light for the selected position will stop flashing and remain ON.

If One Or More Shift Conditions Are Not Met:

1. The indicator light for the current position will remain ON.

2. The newly selected position indicator light will continue to flash.

3. The transfer case **will not** shift.

NOTE: Before retrying a selection, make certain that all the necessary requirements for selecting a new transfer case position have been met. To retry the selection, turn the control knob back to the current position, wait five seconds, and retry selection. To find the shift requirements, refer to the "Shifting Procedure" for your transfer case, located in this section of the owner's manual.

The "SVC 4WD Warning Light" monitors the electronic shift four-wheel drive system. If this light remains on after engine start up or illuminates during driving, it means that the four-wheel drive system is not functioning properly and that service is required.

WARNING!

Always engage the parking brake when powering down the vehicle if the "SVC 4WD Warning Light" is illuminated. Not engaging the parking brake may allow the vehicle to roll which may cause personal injury.

NOTE: Do not attempt to make a shift while only the front or rear wheels are spinning. This could cause damage to driveline components.

When operating your vehicle in 4WD LOW, the engine speed is approximately three times that of the 2WD, 4WD AUTO or 4WD LOCK positions at a given road speed. Take care not to overspeed the engine and do not exceed 25 mph (40 km/h).

Proper operation of four-wheel drive vehicles depends on tires of equal size, type and circumference on each wheel. Any difference in tire size can cause damage to the drivetrain.

Because four-wheel drive provides improved traction, there is a tendency to exceed safe turning and stopping speeds. Do not go faster than road conditions permit.

WARNING!

You or others could be injured if you leave the vehicle unattended with the transfer case in the NEUTRAL position without first fully engaging the parking brake. The transfer case NEUTRAL position disengages both the front and rear driveshafts from the powertrain and will allow the vehicle to move regardless of the transmission position. The parking brake should always be applied when the driver is not in the vehicle.

For additional information on the appropriate use of each transfer case mode position, see the information below:

2WD

Rear-Wheel Drive High Range - This range is for normal street and highway driving on dry hard surfaced roads.

4WD AUTO

Four-Wheel Drive Auto Range - This range sends power to the rear wheels. The four–wheel drive system will be automatically engaged when the vehicle senses a loss of traction. Additional traction for varying road conditions.

4WD LOCK

Four-Wheel Drive Lock Range - This range locks the front and rear driveshafts together forcing the front and rear wheels to rotate at the same speed. Additional traction for loose, slippery road surfaces only.

4WD LOW

Four-Wheel Drive Low Range - This range provides low speed four-wheel drive. Locks the front and rear driveshafts together forcing the front and rear wheels to rotate at the same speed. Additional traction and maximum pulling power for loose, slippery road surfaces only. Do not exceed 25 mph (40 km/h).

N

Neutral - This range disengages both the front and rear driveshafts from the powertrain. To be used for flat towing behind another vehicle. Refer to "Recreational Towing" in "Starting and Operating" for further information.

Shifting Procedure

NOTE:

- If any of the requirements to select a new transfer case position have not been met, the transfer case will not shift. The position indicator light for the previous position will remain ON, and the newly selected position indicator light will continue to flash until all the requirements for the selected position have been met. To retry a shift: return the control knob back to the original position, make certain all shift requirements have been met, wait five seconds and try the shift again.
- If all the requirements to select a new transfer case position have been met, the current position indicator light will turn OFF, the selected position indicator light will flash until the transfer case completes the shift. When the shift is complete, the position indicator light for the selected position will stop flashing and remain ON.

2WD ⇔ 4WD AUTO Or 4WD LOCK

Rotate the 4WD Control Switch to the desired position. Shifts between 2WD and 4WD AUTO and 4WD LOCK can be done with the vehicle stopped or in motion. With

the vehicle in motion, the transfer case will engage/disengage faster if you momentarily release the accelerator pedal after turning the control switch. If the vehicle is stopped, the ignition switch must be in the ON position with the engine either running or OFF. This shift cannot be completed if the ignition switch is in the ACC position.

2WD Or 4WD AUTO Or 4WD LOCK ⇔ 4WD LOW

NOTE: When shifting into or out of 4WD LOW some gear noise may be heard. This noise is normal and is not detrimental to the vehicle or occupants.

Shifting can be performed with the vehicle rolling 2 to 3 mph (3 to 5 km/h) or completely stopped. Use either of the following procedures:

Preferred Procedure

1. With the engine running, slow the vehicle to 2 to 3 mph (3 to 5 km/h).

2. Shift the transmission into NEUTRAL.

3. While still rolling, rotate the transfer case control switch to the desired position.

4. After the desired position indicator light is ON (not flashing), shift the transmission back into gear.

Alternate Procedure

1. Bring the vehicle to complete stop.

2. With the ignition switch in the ON position and the engine either OFF or running, shift the transmission into NEUTRAL.

3. Rotate the transfer case control switch to the desired position.

4. After the desired position indicator light is ON (not flashing), shift the transmission back into gear.

NOTE:

- If Steps 1 or 2 of either the Preferred or Alternate Procedure are not satisfied prior to attempting the shift or if they no longer are being met while the shift attempt is in process, the desired position indicator light will flash continuously while the original position indicator light is ON, until all requirements have been met.
- The ignition switch must be in the ON position for a shift to take place and for the position indicator lights to be operable. If the ignition switch is not in the ON position, then the shift will not take place and no position indicator lights will be on or flashing.

AXLE LOCKER SYSTEM (2500 MODELS ONLY) — IF EQUIPPED

This vehicle is equipped with electronically locking front and rear differentials. These differentials, when engaged, mechanically lock together the axle shafts forcing the wheels to spin at an equal rate. This allows the vehicle to maintain its momentum and prevents it from becoming stuck. The locking front and rear differentials should only be engaged during low-speed, extreme off-road situations where one wheel is likely to not be in contact with the ground. It is not recommended to drive the vehicle with the differentials locked on pavement due to the reduced ability to turn and speed limitations.

CAUTION!

- **Do not lock the front or rear axle on hard surfaced roads. The ability to steer the vehicle is reduced and damage to the drivetrain may occur when the axles are locked on hard surfaced roads.**

(Continued)

CAUTION! (Continued)

- **Do not try to lock the rear axle if the vehicle is stuck and the tires are spinning. You can damage drivetrain components. Lock the rear axle before attempting situations or navigating terrain, which could possibly cause the vehicle to become stuck.**

The locking axles are controlled by the axle locker switch.

The switch has three positions, AXLE UNLOCK, REAR LOCK, and FRONT/REAR LOCK. Under normal driving conditions, the switch should be left in the AXLE UNLOCK position. In the AXLE UNLOCK position, the front and rear axles are unlocked. In the REAR LOCK position, the rear axle is locked. In the FRONT/REAR LOCK position, the front and rear axles are locked.

NOTE: Even when the axles are in the AXLE UNLOCK position, the limited slip differential in the rear axle still provides torque biasing capability for moderate low traction environments.

During the command to lock the axle, the indicator light will flash until the axle is locked. After the lock command has been successfully executed, the light will remain on solid.

To lock the rear axle, place the vehicle in 4LO. Refer to "Four Wheel Drive Operation" in "Starting and Operating" for further information. Move the axle locker switch position to REAR LOCK while traveling less than 3 mph (5 km/h). The RR indicator light will remain on when the rear axle is locked.

NOTE: Left to right wheel speed difference may be necessary to allow the axle to fully lock. If the indicator light is flashing after placing the switch in the REAR

LOCK or FRONT/REAR LOCK position, drive the vehicle in a turn or on loose gravel to expedite the locking action.

WARNING!

Do not use the locked axle position for normal driving. A locked front axle is intended for off-road driving only. Locking the front axle during on-road driving will reduce the steering ability. This could cause a collision and you may be seriously injured.

To lock the front axle; move the axle locker switch to FRONT/REAR LOCK while traveling less than 3 mph (5 km/h). The indicator light will be solid when the front axle is locked.

NOTE: The rear axle must be locked before the front axle will lock.

To unlock the front axle; move the axle locker switch to REAR LOCK. The FRONT/REAR LOCK indicator light will go out when the axle is unlocked.

NOTE: The axle lockers could be torque locked due to side to side loads on the axle. Driving slowly while turning the steering wheel from a left hand turn to a right hand turn or driving in REVERSE for a short distance may be required to release the torque lock and unlock the axles.

To unlock the rear axle; move the axle locker switch to AXLE UNLOCK. The REAR LOCK indicator light will go out when the rear axle is unlocked.

STABILIZER/SWAY BAR SYSTEM — POWER WAGON ONLY

Your vehicle is equipped with an electronic disconnecting stabilizer/sway bar. This system allows greater front suspension travel in off-road situations.

Due to the use of taller springs, this vehicle has an increased ride height of approximately 1.9 in (48.3 mm) in the front and 1.5 in (38.1 mm) in the rear. A major advantage to increasing ride height is the positive effect it has on approach/departure and break over angles.

This system is controlled by the electronic control sway bar switch located on the instrument panel.

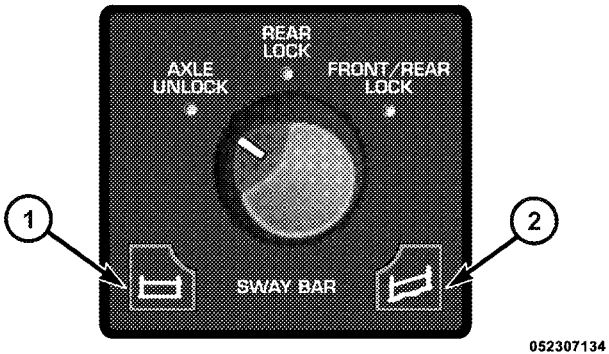

1 — On Road
2 — Off Road

The switch has two positions; On-Road and Off-Road. The system is normally in the On-Road mode, indicated by a solid green light. The stabilizer/sway bar should remain in the On-Road mode during normal driving conditions.

WARNING!

Do not disconnect the stabilizer bar and drive on hard surfaced roads or at speeds above 18 mph (29 km/h), you may lose control of the vehicle, which could result in serious injury. The front stabilizer bar enhances vehicle stability and is necessary for maintaining control of the vehicle. The system monitors vehicle speed and will attempt to reconnect the stabilizer bar at speeds over 18 mph (29 km/h). This is indicated by a flashing off road light and solid on road light. Once vehicle speed is reduced below 14 mph (22 km/h), the system will attempt to return to the Off-Road mode.

To disconnect the stabilizer/sway bar, shift to either 4HI or 4LO as shown in "Four Wheel Drive Operation" and press the top of the stabilizer/sway bar button to obtain the Off-Road position. The amber indicator light will flash until the stabilizer/sway bar has been fully disconnected.

NOTE: The stabilizer/sway bar may be torque locked due to left and right suspension height differences. This condition is due to driving surface differences or vehicle loading. In order for the stabilizer/sway bar to disconnect/reconnect, the right and left halves of the bar must be aligned. This alignment may require that the vehicle be driven onto level ground or rocked from side to side.

To return to the On-Road mode; press the bottom of the stabilizer/sway bar button.

WARNING!

If the stabilizer/sway bar will not return to On-Road mode, vehicle stability is greatly reduced. Do not attempt to drive the vehicle over 18 mph (29 km/h). Driving faster than 18 mph (29 km/h) may cause loss of control of the vehicle, which could result in serious injury. Contact your local service center for assistance.

SAFE OFF-ROAD DRIVING — POWER WAGON ONLY

Off-Road Driving Tips And Vehicle Characteristics

Your vehicle has excellent on and off-road capabilities. These off-road capabilities will allow you to explore those wilderness trails where few travel, providing a source of exciting and satisfying recreation. Before you venture out, you should contact your local governmental agency to determine the designated off-road vehicle (ORV) trails or recreation areas. You should always tread lightly and only use established roads, trails or ORV recreational areas. The National Forest Service, Bureau of Land Management or local Department of Natural Resources are a wealth of information and usually have maps with marked trails.

Skid Plates And Underbody Protection

Steel skid plates protect the major driveline components of the truck including the fuel tank, transfer case and steering damper. In addition, this vehicle is equipped with boxed cross members and fore/aft rails. This additional protection allows the vehicle to be utilized in severe off-road situations that would be considered impassable by a normal truck.

Ramp Travel Index (RTI)

The ramp travel index is the distance, in inches, that you can drive your vehicle with one wheel on a 20-degree ramp without lifting any other wheel off the ground. This

distance up the ramp divided by the wheelbase of the vehicle and multiplied by 1,000 is the RTI. This vehicle has an RTI of 655, which means you can articulate one front wheel 32 inches in the air while the other three wheels remain in contact with the ground.

Water Fording Characteristics

Water fording characteristic is the vehicle's ability to cross a body of still water, where the powertrain and drivetrain are safe from water ingestion. This vehicle has high water fording characteristics with the ability to cross a pool of water, without stopping, 24 inches deep at a maximum speed of 10 mph (16 km/h) and a pool of water 30 inches deep at a maximum speed of 5 mph (8 km/h), both with an entrance ramp angle of 1.3 degrees.

CAUTION!

The door sill height is 25 inches. Water may intrude into the interior of the vehicle at greater depths.

Simultaneous Brake And Throttle Operation

Many off-road driving conditions require the simultaneous use of the brake and throttle (two footed driving). When climbing rocks, logs, or other stepped objects, using light brake pressure with light throttle will keep the vehicle from jerking or lurching. This technique is also used when you need to stop and restart a vehicle on a steep incline.

The Basics Of Off-Road Driving

You will encounter many types of terrain driving off-road. You should be familiar with the terrain and area before proceeding. There are many types of surface conditions: hard packed dirt, gravel, rocks, grass, sand, mud, snow and ice. Every surface has a different effect on

your vehicle's steering, handling and traction. Controlling your vehicle is one of the keys to successful off-road driving, so always keep a firm grip on the steering wheel and maintain a good driving posture. Avoid sudden accelerations, turns or braking. In most cases there are no road signs, posted speed limits or signal lights. Therefore you will need to use your own good judgment on what is safe and what isn't. When on a trail you should always be looking ahead for surface obstacles and changes in terrain. The key is to plan your future driving route while remembering what you are currently driving over.

CAUTION!

Never park your vehicle over dry grass or other combustible materials. The heat from your vehicle exhaust system could cause a fire.

WARNING!

Always wear your seat belt and firmly tie down cargo. Unsecured cargo can become projectiles in an off-road situation.

When To Use Low Range

When driving off-road, shift into 4L (Low Range) for additional traction or to improve handling and control on slippery or difficult terrain. Due to the lower gearing, low range will allow the engine to operate in a higher power range. This will allow you to idle over obstacles and down hills, with improved control and less effort. Also, use 4L (Low Range) in rain, ice, snow, mud, sand, to get heavy loads rolling, improve traction, or whenever 4H (High Range) traction will not do the job.

Driving In Snow, Mud And Sand

There is a drastic reduction in traction when driving in snow, mud or sand. The vehicle will be less responsive to steering, acceleration and braking inputs. Therefore you should accelerate slowly, leave greater stopping distances and avoid abrupt vehicle maneuvers. You want to keep a slow constant steady pace. The key is to maintain the vehicle's momentum.

- **Snow** – In heavy snow or for additional control and traction at slower speeds, shift the transmission to a low gear and shift the transfer case to 4L (Low Range) if necessary. Do not shift to a lower gear than necessary to maintain headway. Over-revving the engine can spin the wheels and traction will be lost. If you start to slow to a stop, try turning your steering wheel no more than a ¼ turn quickly back and forth, while still applying throttle. This will allow the tires to get a fresh "bite" and help maintain your momentum.

CAUTION!

On icy or slippery roads, do not downshift at high engine RPMs or vehicle speeds because engine braking may cause skidding and loss of control.

- **Mud** – Deep mud creates a great deal of suction around the tires and is very difficult to get through. You should use 4L (Low Range) with a gear low enough to maintain your momentum without shifting. If you start to slow to a stop, try turning your steering wheel no more than a ¼ turn quickly back and forth for additional traction. Mud holes pose an increased threat of vehicle damage and getting stuck. They are normally full of debris from previous vehicles getting stuck. As a good practice before entering any mud hole, get out and determine how deep it is, if there are any hidden obstacles and if the vehicle can be safely recovered if stuck.

- **Sand** – Soft sand is very difficult to travel through with full tire pressure. When crossing soft sandy spots in a trail maintain your vehicle's momentum and do not stop. The key to driving in soft sand using the appropriate tire pressure, accelerating slowly, avoiding abrupt maneuvers and maintaining the vehicle's momentum. If you are going to be driving on large soft sandy areas or dunes, reduce your tire pressure to a minimum of 15 psi (103 kPa) to allow for a greater tire surface area. Reduced tire pressure will drastically improve your traction and handling, while driving on the soft sand, but you must return the tires to normal air pressure before driving on pavement or other hard surfaces. Be sure you have a way to air the tires back up prior to reducing the pressure.

CAUTION!

Reduced tire pressures may cause tire unseating and total loss of air pressure. To reduce the risk of tire unseating, while at a reduced tire pressure, reduce your speed and avoid sharp turns or abrupt maneuvers.

Crossing Obstacles (Rocks And Other High Points)

While driving off road, you will encounter many types of terrain. These varying types of terrain bring different types of obstacles. Before proceeding review the path ahead to determine the correct approach and your ability to safely recover the vehicle if something goes wrong. Keeping a firm grip on the steering wheel, bring the vehicle to a complete stop and then inch the vehicle

forward until it makes contact with the object. Apply the throttle lightly while holding a light brake pressure and ease the vehicle up and over the object.

WARNING!

Crossing obstacles can cause abrupt steering system loading which could cause you to loose control of your vehicle.

Using A Spotter

There are many times where it is hard to see the obstacle or determine the correct path. Determining the correct path can be extremely difficult when you are confronting many obstacles. In these cases have someone guide you over, through, or around the obstacle. Have the person stand a safe distance in front of you where they can see the obstacle, watch your tires and undercarriage, and guide you through.

Crossing Large Rocks

When approaching large rocks, choose a path which ensures you drive over the largest with your tires. This will lift your undercarriage over the obstacle. The tread of the tire is tougher and thicker than the side wall and is designed to take the abuse. Always look ahead and make every effort to cross the large rocks with your tires.

CAUTION!

- **Never attempt to straddle a rock that is large enough to strike your axles or undercarriage.**
- **Never attempt to drive over a rock which is large enough to contact the door sills.**

Crossing A Ravine, Gully, Ditch, Washout Or Rut

When crossing a ravine, gully, ditch, washout or a large rut, the angled approach is the key to maintaining your vehicle's mobility. Approach these obstacles at a 45-degree angle and let each tire go through the obstacle

independently. You need to use caution when crossing large obstacles with steep sides. Do not attempt to cross any large obstacle with steep sides at an angle great enough to put the vehicle at risk of a rollover. If you get caught in a rut, dig a small trench to the right or left at a 45-degree angle ahead of the front tires. Use the removed dirt to fill the rut ahead of the turnout you just created. You should now be able to drive out following the trench you just created at a 45-degree angle.

WARNING!

There is an increased risk of rollover when crossing an obstacle, at any angle, with steep sides.

Crossing Logs

To cross a log, approach it at a slight angle (approximately 10 to 15 degrees). This allows one front tire to be on top of the log while the other just starts to climb the log. While climbing the log, modulate your brake and accelerator to avoid spinning the log out from under your tires. Then ease the vehicle off the log using your brakes.

CAUTION!

Do not attempt to cross a log with a greater diameter than the running ground clearance or the vehicle will become high centered.

Getting High Centered

If you get hung up or high centered on an object, get out of the vehicle and try to determine what the vehicle is hung up on, where it is contacting the underbody and what is the best direction to recover the vehicle. Depending on what you are in contact with, jack the vehicle up and place a few rocks under the tires so the weight is off of the high point when you let the vehicle down. You can also try rocking the vehicle or winching the vehicle off the object.

CAUTION!

Winching or rocking the vehicle off hard objects increases the risk of underbody damage.

Hill Climbing

Hill climbing requires good judgment and a good understanding of your abilities and your vehicle's limitations. Hills can cause serious problems. Some are just too steep to climb and should not be attempted. You should always feel confident with the vehicle and your abilities. You should always climb hills straight up and down. Never attempt to climb a hill on an angle.

- **Before Climbing A Steep Hill** – As you approach a hill consider its grade or steepness. Determine if it is too steep. Look to see what the traction is on the hill side trail. Is the trail straight up and down? What is on top and the other side? Are there ruts, rocks, branches or other obstacles on the path? Can you safely recover the vehicle if something goes wrong? If everything looks good and you feel confident, then change transmission into a lower gear, shift the transfer case into 4L (Low) and proceed with caution. You should use first gear and 4L (Low Range) for very steep hills.
- **Driving Up Hill** – Once you have determined your ability to proceed and have shifted into the appropriate gear, line your vehicle up for the straightest possible run. Accelerate with an easy constant throttle and apply more power as you start up the hill. Do not race forward into a steep grade, the abrupt change of grade could cause you to lose control. If the front end begins to bounce, ease off the throttle slightly to bring all four tires back on the ground. As you approach the crest of the hill ease off the throttle and slowly proceed over the top. If the wheels start to slip as you approach the crest of a hill, ease off the accelerator and maintain headway by turning the steering wheel no more than a ¼ turn quickly back and forth. This will provide a

fresh "bite" into the surface and will usually provide enough traction to complete the climb. If you do not make it to the top, place the vehicle in REVERSE and back straight down the grade using engine resistance along with the vehicle brakes.

WARNING!

Never attempt to climb a hill at an angle or turn around on a steep grade. Driving across an incline increases the risk of a roll over, which may result in severe injury.

- **Driving Down Hill** – Before driving down a steep hill you need to determine if it is too steep for a safe descent. What is the surface traction? Is the grade too steep to maintain a slow controlled descent? Are there obstacles? Is it a straight descent? Is there plenty of distance at the base of the hill to regain control if the vehicle descends too fast? If you feel confident in your ability to proceed then make sure you are in 4L (Low Range) with the transmission in first gear (manually select first gear on automatic transmissions) and proceed with caution. Allow engine braking to control the descent and apply your brakes if necessary, but do not allow the tires to lock.

WARNING!

Do not descend a steep grade in NEUTRAL. Use vehicle brakes in conjunction with engine braking. Descending a grade too fast could cause you to lose control and be seriously injured.

- **Driving Across An Incline** – If at all possible avoid driving across an incline. If it is necessary, know your vehicle's abilities. Driving across an incline places more weight on the down hill wheels, which increases the possibilities of a down hill slide or rollover. Make

sure the surface has good traction with firm and stable soils. If possible transverse the incline at an angle heading slightly up or down.

WARNING!

Driving across an incline increases the risk of a rollover, which may result in severe injury.

- **If You Stall Or Begin To Lose Headway** – If you stall or begin to lose headway while climbing a steep hill, allow your vehicle to come to a stop and immediately apply the brake. Restart the engine and shift into REVERSE. Back slowly down the hill allowing the compression braking of the engine and transmission to help regulate your speed. If the brakes are required to control vehicle speed, apply them lightly and avoid locking or skidding the tires.

WARNING!

If the engine stalls or you lose headway or cannot make it to the top of a steep hill or grade, never attempt to turn around. To do so may result in tipping and rolling the vehicle, which may result in severe injury. Always back carefully straight down a hill in REVERSE. Never back down a hill in NEUTRAL using only the vehicle brakes. Never drive diagonally across a hill, always drive straight up or down.

Driving Through Water

Extreme care should be taken crossing any type of water. Water crossings should be avoided if possible and only be attempted when necessary, in a safe responsible manner. You should only drive through areas which are designated and approved. You should tread lightly and avoid damage to the environment. You should know

your vehicle's abilities and be able to recover it if something goes wrong. You should never stop or shut a vehicle off when crossing deep water unless you ingested water into the engine air intake. If the engine stalls do not attempt to restart it. Determine if it has ingested water first. The key to any crossing is low and slow. You want to use first gear in 4L (Low Range) and proceed very slowly with a constant slow speed (3-5 mph [5–8 km/h] maximum) and light throttle. Keep the vehicle moving; do not try to accelerate through the crossing. After crossing any water higher than the bottom of the axle differentials, you should inspect all of the vehicle fluids for signs of water ingestion.

CAUTION!

Water ingestion into the axles, transmission, transfer case, engine or vehicle interior can occur if you drive too fast or through too deep of water. Water can cause permanent damage to engine, driveline or other vehicle components and your brakes will be less effective once wet and/or muddy

- **Before You Cross Any Type Of Water** – As you approach any type of water you need to determine if you can cross it safely and responsibly. If necessary, get out and walk through the water or probe it with a stick. You need to be sure of its depth, approach angle, current and bottom condition. Be careful of murky or muddy waters, check for hidden obstacles. Make sure you will not be intruding on any wildlife and you can recover the vehicle if necessary. The key to a safe

crossing is the water depth, current and bottom conditions. On soft bottoms the vehicle will sink in, effectively increasing the water level on the vehicle. Be sure to consider this when determining the depth and the ability to safely cross.

- **Crossing Puddles, Pools, Flooded Areas Or Other Standing Water** – Puddles, pools, flooded or other standing water areas normally contain murky or muddy waters. These water types normally contain hidden obstacles and make it difficult to determine an accurate water depth, approach angle, and bottom condition. Murky or muddy water holes are where you want to hook up tow straps prior to entering. This makes for a faster, cleaner and easier vehicle recovery. If you are able to determine you can safely cross, than proceed using the low and slow method.

CAUTION!

Muddy waters can reduce the cooling system effectiveness by depositing debris onto the radiator.

- **Crossing Ditches, Streams, Shallow Rivers Or Other Flowing Water** – Flowing water can be extremely dangerous. Never attempt to cross a fast running stream or river even in shallow water. Fast moving water can easily push your vehicle downstream sweeping it out of control. Even in very shallow water, a high current can still wash the dirt out from around your tires putting you and your vehicle in jeopardy. There is still a high risk of personal injury and vehicle damage with slower water currents in depths greater than the vehicle's running ground clearance. You should never attempt to cross flowing water which is deeper than the vehicle's running ground clearance. Even the slowest current can push the heaviest vehicle

downstream out of control if the water is deep enough to push on the large surface area of the vehicle's body. Before you proceed determine the speed of the current, the water's depth, approach angle, bottom condition and if there are any obstacles, then cross at an angle heading slightly upstream using the low and slow technique.

WARNING!

Never drive through fast moving deep water. It can push your vehicle downstream, sweeping it out of control. This could put you and your passengers at risk of injury or drowning.

Airing Down For Off-Road Driving

Running lower tire pressure off-road can improve your ride comfort and vehicle traction. Reducing the tire air pressure allows the tire to bulge slightly, improving its surface area for better flotation and ability to mold or form to the ground contour. Different terrain, tires, and vehicles require different tire pressure. Hard surfaces like rock and heavier vehicles require higher pressures than softer surfaces such as sand and lighter vehicles. You will need to experiment to determine what is right for your situation. It is easier and faster to let air out than it is to replace it so, start high and lower it as required. Remember you must return the tires to normal air pressure before driving on road or at highway conditions. Be sure you have a way to return the tires to their normal on road air pressure.

CAUTION!

Reduced tire pressure increases the risk of tire damage and may cause tire unseating with total loss of air pressure. To reduce the risk of tire unseating, while at a reduced tire pressure, drive at slower speeds and avoid sharp turns or abrupt maneuvers.

Vehicle Recovery

If you drive off-road, you may encounter a situation where you will need to recover your vehicle. Vehicle recovery should always be given consideration before attempting a questionable obstacle. You should never go off-road driving without the ability to recover your vehicle from a situation. Having another vehicle with you usually works best for most situations. The first thing to do is assess the situation. Why are you stuck? Are you hung up on something? Would it be easier to go forward or to go backward? Can you still move the vehicle? Is there an anchor point to winch to? Are you alone or do you have another vehicle to help? Is there high risk of vehicle damage during the recovery process? Answering these questions will help you determine the best method of recovery. If you can still move the vehicle slightly and the only issue is slick ground, then rock cycling your vehicle would be the first choice. If you have ample room, an additional vehicle and there is low risk of vehicle impingement on the surroundings, then using a tow strap to the vehicle tow hooks would be fast and easy. If the vehicle is severely hung up or in a situation where great care needs to be taken during the recovery, then nothing can do the job better than a winch. If you are severely hung up on something you should jack the vehicle up and stack something under the wheels to allow the vehicle to roll off the object without causing further damage. This should be tried before attempting any recovery method.

CAUTION!

Pulling the vehicle off an obstacle, without first clearing the object, may result in additional underbody damage.

- **Rock Cycling Your Vehicle** – Rock cycling your vehicle is one of the easiest, fastest and most commonly used methods. This simply involves shifting your

vehicle from DRIVE to REVERSE, while applying throttle after each shift. During this process, for additional traction, try turning your steering wheel quickly back and forth no more than a ¼ turn. If you are stuck in mud, sand, or snow try spinning your tires during this process to clean the debris from the tread and improve the traction. You want to create a rocking motion with the vehicle. This helps build vehicle momentum, which hopefully gets you out. Remember to ease off and on the accelerator before and after the shift. If after a few rock cycles your vehicle is not free, stop and try another method of recovery. Continuous rock cycling will only cause unnecessary damage to your vehicle and the environment.

CAUTION!

Damage can occur when spinning your tires at an excessive high speed. Do not spin your tires faster than an indicated 35 mph (56 km/h).

- **Using The Tow Hooks With A Tow Strap** – Tow straps are a quick and easy way to recover your vehicle from minor situations if you have a secondary vehicle which is not stuck. The tow hooks on your vehicle are designed to take the abusive force generated during vehicle recovery. Do not use the bumper or any other vehicle component as an attachment point. Using tow straps requires coordination between the two drivers. Good communication and line of sight are required for a safe recovery. First connect the tow strap to the correct attachment points on both vehicles. There should be a least 20 to 30 feet between the vehicles to allow for a safe recovery. If necessary join

two tow straps together using a 1 ½ inch hard wood dowel. This will keep the straps from becoming knotted and is safer than using a clevis pin if the strap breaks. Next have the tow vehicle backup, leaving two to three feet worth of slack in the strap. Then the tow vehicle, using light throttle, should accelerate tightening the strap providing the pulling force needed to free the vehicle. The vehicle being recovered should assist in the recovery, at the time of the snap, by slowly spinning the tires in the same direction as the pulling vehicle. After the vehicle becomes free, the driver of the previously stuck vehicle should signal they are free and should hit their brakes stopping both vehicles. The driver of the pulling vehicle should let off the throttle without using the brakes, once signaled by the other driver. This sequence is important to avoid having the recovered vehicle hit the pulling vehicle.

WARNING!

Never use tow straps with end hooks or link two straps with a clevis pin. These heavy metal objects could become projectiles if a strap breaks, which could cause severe injury. Never leave more than two or three feet of slack in the strap. More slack than this greatly increases the risk of injury and vehicle damage. Always keep everyone at least 30 feet away from a strapping or winching situation.

- **Winching (Refer To "Winch Operation" For Additional Information)** – Winching is most commonly used in the following situations: there is no support vehicle available, a high controlled force is required to recover the vehicle, there is a high risk of environmental or vehicle damage, or where nothing else seems to work. A winch can deliver a high pulling force with a great deal of control. It allows you to walk the vehicle

out of the situation in a slow controlled manner. This control works well for avoiding further vehicle damage. Once you decide it is time to use the winch look for a good anchor point. It needs to be strong enough to hold more than the vehicle's weight and provide a direction of pull as straight as possible. Use block and tackle if necessary to improve the angle of pull or increase the winch's pulling force. If the anchor point is a tree use a strap around its base and hook the cable to the strap. If it is another vehicle, then place that vehicle in PARK and block the front tires. If you cannot find an anchor point within reach try using your spare tire by burying it. Once you have determined an anchor point hook up the cable, ensuring there are a least five wraps of cable left on the drum, and place a floor mat or something else over the strung out cable. Placing something over the strung out cable helps keep the cable on the ground if it breaks. Next, place the vehicle in first gear and apply a very light throttle as you power the winch in. Be careful not to allow slack in the cable as you recover the vehicle. Do not try to guide the cable into the drum. If it starts to bunch up on one end, let it. You can re-spool the cable afterwards. Never use a winch cable as a tow strap and always stand back while winching.

WARNING!

Winch cables are under high tension when in use and can become a projectile if they fail. Never stand over or straddle the winch cable. Never jerk or overload the winch cable. Never stand in front of the vehicle while winching. Failure to follow these instructions can result in serious or fatal injury.

After Driving Off-Road

Off-road operation puts more stress on your vehicle than does most on-road driving. After going off-road, it is

always a good idea to check for damage. That way you can get any problems taken care of right away and have your vehicle ready when you need it.

- Completely inspect the underbody of your vehicle. Check tires, body structure, steering, suspension, and exhaust system for damage.
- Inspect the radiator for mud and debris and clean as required.
- Check threaded fasteners for looseness, particularly on the chassis, drivetrain components, steering, and suspension. Retighten them, if required, and torque to the values specified in the Service Manual.
- Check for accumulations of plants or brush. These things could be a fire hazard. They might hide damage to fuel lines, brake hoses, axle pinion seals, and propeller shafts.
- After extended operation in mud, sand, water, or similar dirty conditions, have the radiator, fan, brake rotors, wheels, brake linings, and axle yokes inspected and cleaned as soon as possible.

WARNING!

Abrasive material in any part of the brakes may cause excessive wear or unpredictable braking. You might not have full braking power when you need it to prevent a collision. If you have been operating your vehicle in dirty conditions, get your brakes checked and cleaned as necessary.

- If you experience unusual vibration after driving in mud, slush or similar conditions, check the wheels for impacted material. Impacted material can cause a wheel imbalance and freeing the wheels of it will correct the situation.

LIMITED-SLIP DIFFERENTIAL

The limited-slip differential provides additional traction on snow, ice, mud, sand and gravel, particularly when there is a difference between the traction characteristics of the surface under the right and left rear wheels. During normal driving and cornering, the limited-slip unit performs similarly to a conventional differential. On slippery surfaces, however, the differential delivers more of the driving effort to the rear wheel having the better traction.

The limited-slip differential is especially helpful during slippery driving conditions. With both rear wheels on a slippery surface, a slight application of the accelerator will supply maximum traction. When starting with only one rear wheel on an excessively slippery surface, slight momentary application of the parking brake may be necessary to gain maximum traction.

WARNING!

On vehicles equipped with a limited-slip differential never run the engine with one rear wheel off the ground since the vehicle may drive through the rear wheel remaining on the ground. You could lose control of the vehicle.

Care should be taken to avoid sudden accelerations when both rear wheels are on a slippery surface. This could cause both rear wheels to spin, and allow the vehicle to slide sideways on the crowned surface of a road or in a turn.

DRIVING ON SLIPPERY SURFACES

Acceleration

Rapid acceleration on snow covered, wet, or other slippery surfaces may cause the driving wheels to pull

erratically to the right or left. This phenomenon occurs when there is a difference in the surface traction under the rear (driving) wheels.

WARNING!

Rapid acceleration on slippery surfaces is dangerous. Unequal traction can cause sudden pulling of the rear wheels. You could lose control of the vehicle and possibly have a collision. Accelerate slowly and carefully whenever there is likely to be poor traction (ice, snow, wet mud, loose sand, etc.).

Traction

When driving on wet or slushy roads, it is possible for a wedge of water to build up between the tire and road surface. This is known as hydroplaning and may cause partial or complete loss of vehicle control and stopping ability. To reduce this possibility, the following precautions should be observed:

1. Slow down during rainstorms or when the roads are slushy.
2. Slow down if the road has standing water or puddles.
3. Replace tires when tread wear indicators first become visible.
4. Keep tires properly inflated.
5. Maintain sufficient distance between your vehicle and the vehicle in front of you to avoid a collision in a sudden stop.

DRIVING THROUGH WATER

Driving through water more than a few inches/centimeters deep will require extra caution to ensure safety and prevent damage to your vehicle.

Flowing/Rising Water

WARNING!

Do not drive on or across a road or path where water is flowing and/or rising (as in storm run-off). Flowing water can wear away the road or path's surface and cause your vehicle to sink into deeper water. Furthermore, flowing and/or rising water can carry your vehicle away swiftly. Failure to follow this warning may result in injuries that are serious or fatal to you, your passengers, and others around you.

Shallow Standing Water

Although your vehicle is capable of driving through shallow standing water, consider the following Caution and Warning before doing so.

CAUTION!

- **Always check the depth of the standing water before driving through it. Never drive through standing water that is deeper than the bottom of the tire rims mounted on the vehicle.**
- **Determine the condition of the road or the path that is under water and if there are any obstacles in the way before driving through the standing water.**
- **Do not exceed 5 mph (8 km/h) when driving through standing water. This will minimize wave effects.**

(Continued)

CAUTION! (Continued)

- **Driving through standing water may cause damage to your vehicle's drivetrain components. Always inspect your vehicle's fluids (i.e., engine oil, transmission, axle, etc.) for signs of contamination (i.e., fluid that is milky or foamy in appearance) after driving through standing water. Do not continue to operate the vehicle if any fluid appears contaminated, as this may result in further damage. Such damage is not covered by the New Vehicle Limited Warranty.**
- **Getting water inside your vehicle's engine can cause it to lock up and stall out, and cause serious internal damage to the engine. Such damage is not covered by the New Vehicle Limited Warranty.**

WARNING!

- **Driving through standing water limits your vehicle's traction capabilities. Do not exceed 5 mph (8 km/h) when driving through standing water.**
- **Driving through standing water limits your vehicle's braking capabilities, which increases stopping distances. Therefore, after driving through standing water, drive slowly and lightly press on the brake pedal several times to dry the brakes.**
- **Getting water inside your vehicle's engine can cause it to lock up and stall out, and leave you stranded.**
- **Failure to follow these warnings may result in injuries that are serious or fatal to you, your passengers, and others around you.**

OFF-ROAD DRIVING TIPS

Care should be taken when attempting to climb steep hills or driving diagonally across a hill or slope. If natural obstacles force you to travel diagonally up or down a hill, choose a mild angle and keep as little side tilt as possible. Keep the vehicle moving and make turns slowly and cautiously.

If you must back down a hill, back straight down using REVERSE gear. Never back down in NEUTRAL or diagonally across the hill.

When driving over sand, mud, and other soft terrain, shift to low gear and drive steadily. Apply the accelerator slowly to avoid spinning the wheels.

Do not reduce the tire pressures for this type of driving.

After Driving Off-Road

Off-road operation puts more stress on your vehicle than does most on-road driving. After going off-road, it is always a good idea to check for damage. That way you can get any problems taken care of right away and have your vehicle ready when you need it.

- Completely inspect the underbody of your vehicle. Check tires, body structure, steering, suspension, and exhaust system for damage.
- Inspect the radiator for mud and debris and clean as required.
- Check threaded fasteners for looseness, particularly on the chassis, drivetrain components, steering, and suspension. Retighten them, if required, and torque to the values specified in the Service Manual.
- Check for accumulations of plants or brush. These things could be a fire hazard. They might hide damage to fuel lines, brake hoses, axle pinion seals, and propeller shafts.

- After extended operation in mud, sand, water, or similar dirty conditions, have the radiator, fan, brake rotors, wheels, brake linings, and axle yokes inspected and cleaned as soon as possible.

WARNING!

Abrasive material in any part of the brakes may cause excessive wear or unpredictable braking. You might not have full braking power when you need it to prevent a collision. If you have been operating your vehicle in dirty conditions, get your brakes checked and cleaned as necessary.

- If you experience unusual vibration after driving in mud, slush or similar conditions, check the wheels for impacted material. Impacted material can cause a wheel imbalance and freeing the wheels of it will correct the situation.

WINCH USAGE (POWER WAGON ONLY) — IF EQUIPPED

Things To Know Before Using Your Winch

General Winch Information

Your vehicle is equipped with an electric vehicle recovery winch. This winch uses the electrical power from the vehicle charging system to power a motor that winds wire rope into the winch drum via planetary gear reduction. By nature, a winch is capable of generating very high forces and should be used with care. Do not operate the winch without reading and understanding the complete winch owner's manual.

Tensioning The Wire Rope

The winch rope must be properly tensioned before use. Follow the instructions below to tension the rope:

1. Un-spool the wire rope leaving five wraps of rope on the winch drum.

2. Attach the hook to a suitable anchor point.

CAUTION!

Be certain the anchor will withstand the load required to tension the wire rope.

3. Apply at least 500 lbs (227 kg) of tension to the rope while winding the rope. Always use care to ensure the rope does not pile up on one side of the drum and is neatly wound onto the drum.

CAUTION!

Wire rope must spool on the winch drum in the direction indicated on the drum rotation decal on the winch.

Low Voltage Interrupt

Your winch is equipped with a device that will interrupt winch function if the vehicle charging system voltage drops to a low level. The winch will not power-in or out for 30 seconds if this device is tripped. If the interrupt is tripped, the vehicle should be operated at high idle for a few minutes to allow the vehicle charging system to recover before continuing to winch.

Winch Motor Thermal Protection

Your winch is equipped with a thermal protection device in the motor. If the winch is operated for an excessive duration, the device may interrupt motor function to protect the winch motor. During this time the winch will power-out but will not power-in. Allow the winch motor to cool for a few minutes before continuing to winch. The winch will resume normal function once the motor cools.

Understanding The Features Of Your Winch

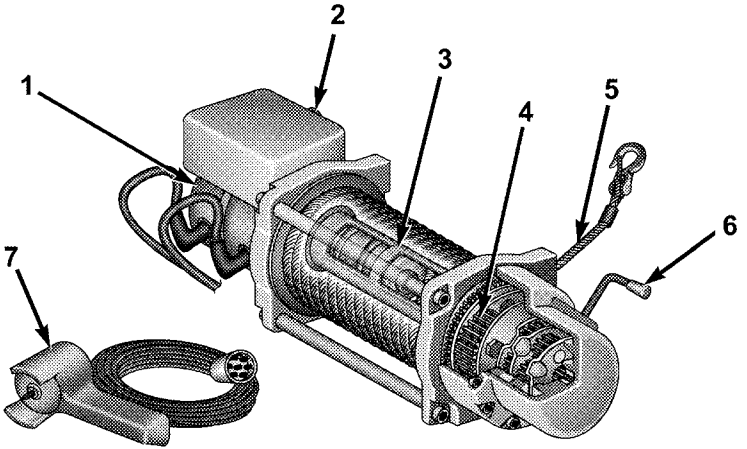

814a6beb

Winch Components

1. **Motor:** The winch motor is powered by the vehicle charging system and features a thermal protection switch that automatically stops motor function in the power-in direction if the motor gets too hot.

2. **Remote Socket:** The remote socket allows the remote control to be attached to the control pack to allow the winch to function.

3. **Winch Drum With Integral Brake:** The winch drum allows the wire rope to be stored on the winch and transmits force to the wire rope. The winch is equipped with an integral brake that will stop rotation of the winch drum if the winch motor is stopped.

4. **3-Stage Planetary Gear Set:** Provides balance between speed and pulling power.

5. **Wire Rope:** The wire rope allows the winch to be connected to an anchor to provide a pulling force.

6. **Clutch Lever:** The clutch lever allows the winch drum to be disconnected from the winch motor to allow the wire rope to be pulled from the winch by hand.

7. **Remote Control:** The remote control provides the interface between the winch operator and the winch. The remote control provides the ability to power the winch in, out, and stop the winch. To operate the winch, the toggle switch is pressed down to power the winch in and up to power the winch out. The winch will stop if the switch is left in the neutral (center) position.

CAUTION!

If not installed, the hook strap must be placed on the hook.

Fairlead: The fairlead acts as a guide for the wire rope and minimizes damage to the rope.

Winch Accessories

The following accessories are necessary to attach the winch to anchors, change direction of pull, and for safe winching.

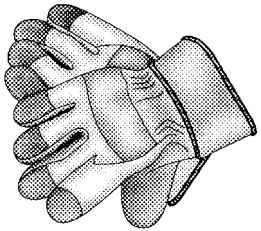

8149d0ee

Gloves: Wire rope, through use, will develop "barbs" which can slice skin. It is extremely important to wear protective gloves while operating the winch or handling the wire rope. Avoid loose fitting clothes or anything that could become entangled in the wire rope and other moving parts.

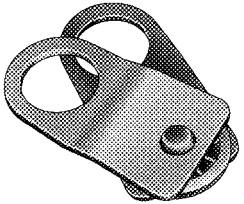

8149d0ea

Snatch/Block Pulley: Used properly, the multi-purpose snatch block allows you to (1) increase the winch's pulling power; and (2) change your pulling direction without damaging the wire rope. Proper use of the snatch block is covered in "Before You Pull."

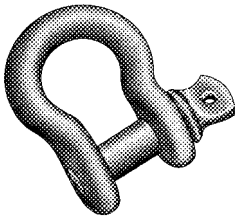

8149d0e6

Clevis/D-Shackles: The D-Shackle is a safe means of connecting the looped ends of cables, straps and snatch blocks. The shackle's pin is threaded to allow easy removal.

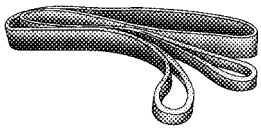

8149d0fd

Tree Trunk Protector: Typically made of tough, high-quality nylon, it provides the operator an attachment point for the winch rope to a wide variety of anchor points and objects, as well as protect living trees.

Operating Your Winch

WARNING!

Failure to observe any of these warnings regarding proper winch usage may result in severe injury.

- **Always use supplied hook strap to hold the hook when spooling wire rope in or out.**
- **Never use as a hoist.**
- **Never use to move persons.**
- **Never exceed winch or wire rope rated capacity.**
- **Always wear heavy leather gloves when handling the wire rope.**
- **Never touch wire rope or hook while in tension or under load.**
- **Never engage or disengage clutch if winch is under load, wire rope is in tension, or wire rope drum is moving.**

(Continued)

WARNING! (Continued)

- **Always stand clear of wire rope and load and keep others away during winching.**
- **Always keep hands and clothing clear of the wire rope, hook and fairlead opening during operation and when spooling.**
- **Never wrap wire rope back onto itself. Always use a choker chain, wire choker rope or tree trunk protector on the anchor.**
- **Never attach a recovery strap to the winch hook to increase the length of a pull.**
- **Never attempt to tow a vehicle with the recovery strap attached directly to the winch hook.**
- **Never use "bungee" straps that develop tremendous and potentially dangerous amounts of force when stretched.**

(Continued)

WARNING! (Continued)

- **Always disconnect the remote control when not in use.**
- **Never winch when there are less than five wraps of wire rope around the winch drum.**
- **Always pass remote control through a window to avoid pinching lead in door, then using remote inside a vehicle.**
- **Never leave the remote control plugged into the winch while free spooling, rigging or sitting idle.**

General Information

Practice using your winch before you get stuck. Some key points to remember when using your winch are:

1. Always take your time to assess the situation and plan your pull carefully.

2. Always take your time when using a winch.

3. Use the right equipment for the situation.

4. Always wear leather gloves and do not allow the wire rope to slip through your hands when handling the rope.

5. Only the operator should handle the wire rope and remote control.

6. Think safety at all times.

Vehicle Recovery Using The Winch

CAUTION!

- **Always Know Your Winch: Take the time to fully read and understand the included Installation and Operations Guide, and Basic Guide to Winching Techniques, in order to understand your winch and the winching operation.**
- **Always inspect winch installation and wire rope condition before operating the winch. Frayed, kinked or damaged wire rope must be replaced immediately. Loose or damaged winch installation must be corrected immediately.**
- **Always be sure any element which can interfere with safe winching operations is removed prior to initiating winching.**
- **Always keep remote control lead clear of the drum, wire rope and rigging.**

(Continued)

CAUTION! (Continued)

- **Inspect for cracks, pinches, frayed wires, or loose connections. Replace if damaged.**
- **Be careful not to pull the Winch Cable Collar through the rollers. Watch and listen to Winch for proper snugness.**

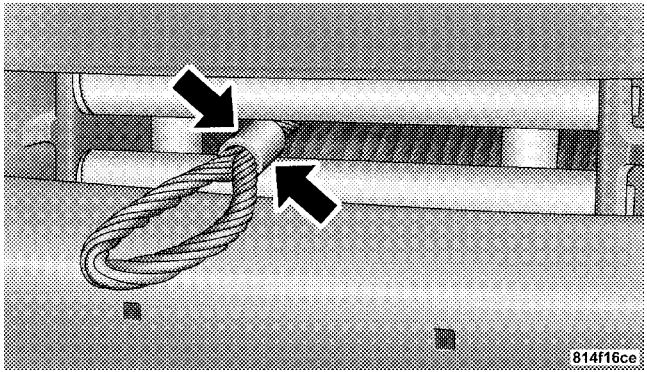

1. Inspect the winch, winch mount, and wire rope for damage. Do not use the winch if the mount is loose or rope shows excessive wear or damage.

2. Put on gloves.

3. Disengage the clutch to allow free spooling of the winch drum, rotate the clutch lever on the winch to disengage. Freespooling conserves battery power.

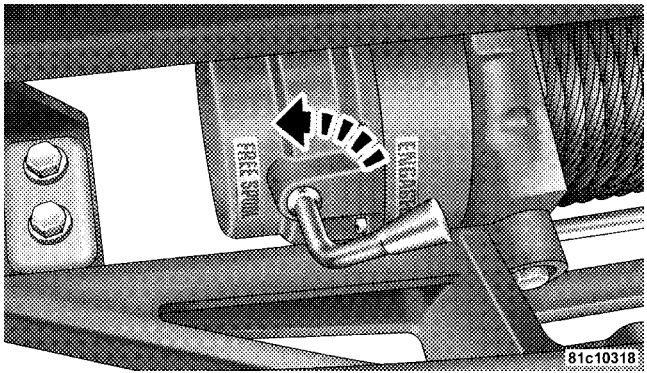

Free Spool

4. Free the winch hook and attach the hook strap. Free the winch hook from its anchor point. Attach the hook strap to the hook (if not attached).

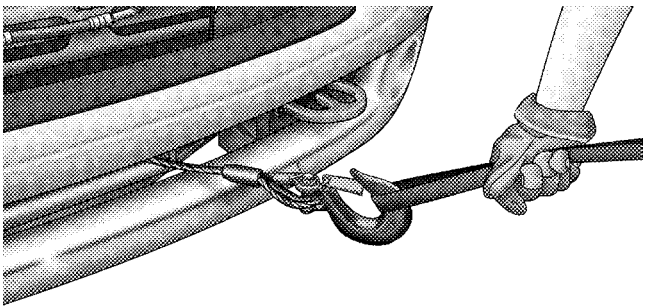

Hook Strap

5. Pull the wire to the anchor point. Pull out enough wire rope to reach your anchor point. Be sure to keep a certain amount of tension on the wire as it can become twisted and over-wrapped when slackened, leading to wire rope damage. To prevent losing the end, hold the hook strap while you work.

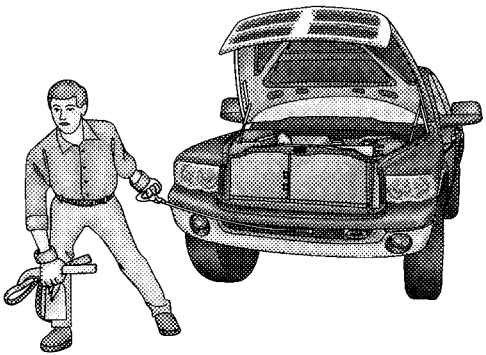

814a0dd8

6. Secure to the anchor point. Once you have established your anchor point, secure the tree-trunk protector or choker-chain around the object.

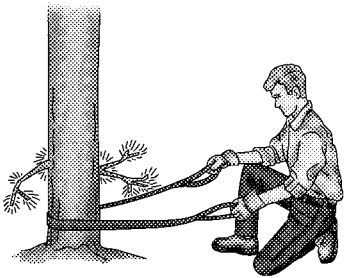

8149d10f

Tree Trunk Protector

CAUTION!

Always be certain the anchor you select will withstand the load.

NOTE: How to choose an anchor point: A secure anchor is critical to winching operations. An anchor must be strong enough to hold while winching. Natural anchors include trees, stumps and rocks. Hook the cable as low as possible. If no natural anchors are available when recovering another vehicle, your vehicle becomes the anchor point. In this case, be sure to put the transmission in NEUTRAL, apply the hand brake and block its wheels to prevent your vehicle from moving. Ideally, you'll want an anchor point that will enable you to pull straight in the direction the vehicle will move. This allows the wire rope to wind tightly and evenly onto the spooling drum. An anchor point as far away as possible will provide the winch with its greatest pulling power.

7. Attach the Clevis/D-shackle and Tree Trunk Protector. Attach the shackle to the two ends of the strap or chain and through the hook loop, being careful not to over tighten (tighten and back-off 1/2 turn).

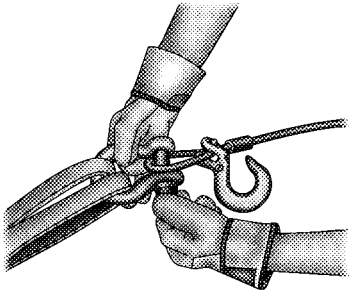

8149d116

Clevis/D-Shackles

8. Lock the clutch. Lock the winch drum by rotating the clutch lever on the winch to engage.

NOTE: Always ensure the clutch is fully engaged or disengaged.

9. Connect the remote control to the winch control box, located behind the front bumper. Be careful not to let the remote control cord dangle in front of the winch. If you choose to control the winch from inside your vehicle, always pass the remote through a window to avoid pinching the cord in the door. Always disconnect the remote control when not in use.

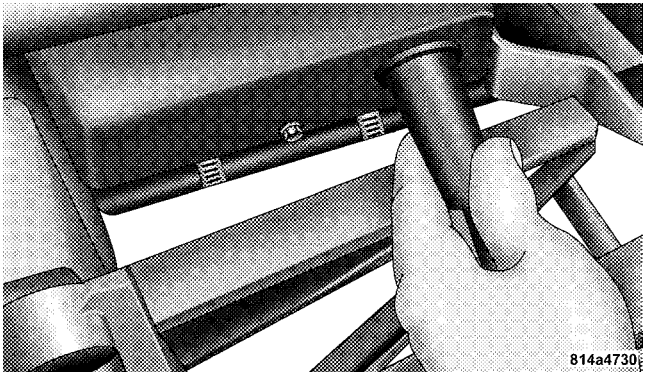

10. Put wire rope under tension. Using the remote control switch, slowly wind the wire rope until no slack remains. Once the wire rope is under tension, stand well clear of it and never step over it.

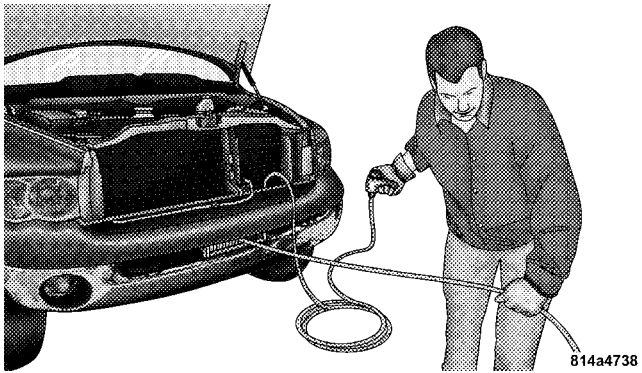

11. Check your anchor. Make sure all connections are secured and free of debris before continuing with the winching procedure.

12. Check wire rope. The wire rope should be neatly wound around the spooling drum. Improper winding can cause damage to the wire rope.

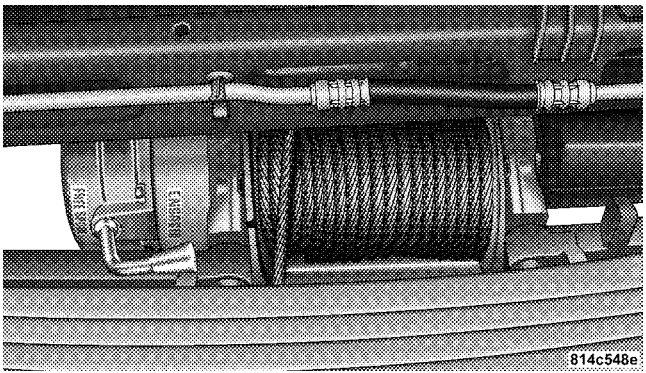

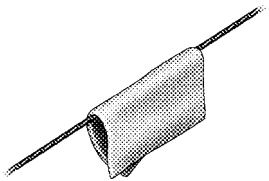

8149d108

13. In certain situations you may decide to throw a heavy blanket or similar object over the wire rope. A heavy blanket can absorb energy should the wire rope break. Place it on the wire rope midway between the winch and the anchor point. Do this before the wire rope is put under tension. Do not approach or move the blanket once tension is applied. Do not allow it to get pulled into the fairlead. If it is necessary to move or remove the blanket, slack the tension on the wire rope first.

14. **Establish "no people" zones:** Make your intentions clear. Be sure that everyone in the immediate vicinity surrounding the winching operation is completely aware of your intentions before you pull. **Declare where the spectators should not stand - never behind or in front of the vehicle and never near the wire rope or snatch block. Your situation may have other "no people" zones.**

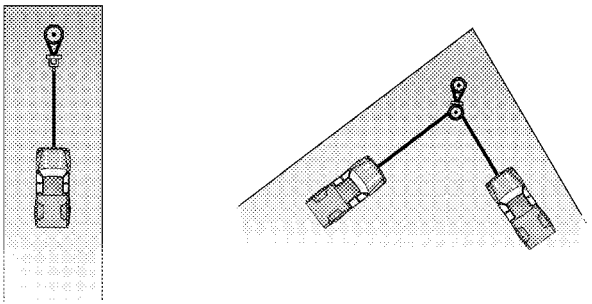

814a0ddc

No People Zones

15. Begin winching. With the winching vehicles engine on and light tension already on the wire rope, begin winching slowly and steadily. Be sure that the wire rope is winding evenly and tightly around the spooling drum.

For additional assistance, the winched vehicle can be slowly driven while being pulled by the winch. Continue pulling until the vehicle is on stable ground. If you are able to drive the vehicle, the winching operation is complete.

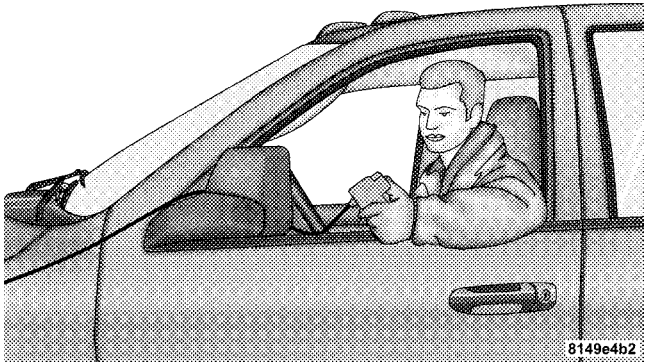

Using The Remote Control

NOTE:

- Avoid overheating the winch motor. For extended winching, stop at reasonable intervals to allow the winch motor to cool down.

- **What to look for under load:** The wire rope must always spool onto the drum as indicated by the drum rotation decal on the winch. As you power-in, make sure the wire rope winds evenly and tightly on the drum. This prevents the outer wire wraps from drawing into the inner wraps, binding and damaging the wire rope. Avoid shock loads by using the control switch intermittently to take up wire rope slack. Shock loads can momentarily far exceed the winch and wire rope ratings. During side pulls the wire rope tends to stack up at one end of the drum. This stack can become large enough to cause serious damage to the winch. So, line up pulls as straight ahead as possible and stop winching if the wire rope comes close to the tie rods or mounting plate. To fix an uneven stack, spool out that

section of the rope and reposition it to the opposite end of the drum, which will free up space for continued winching.

16. Secure vehicle. Once recovery of the vehicle's is complete, be sure to secure the vehicle's brakes and put the transmission in PARK. Release tension in the wire rope.

17. Disconnect the wire rope, and disconnect from the anchor.

18. Rewind the wire rope. The person handling the wire rope should walk the rope in and not let it slide through the hand, control the winch at all times.

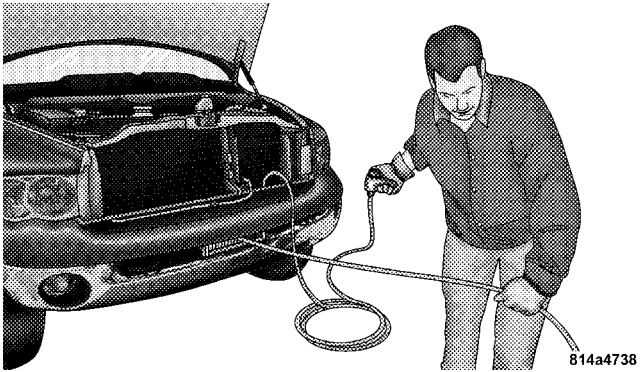

WARNING!

To prevent serious injury, NEVER put your fingers inside the hook area as you are powering-in.

NOTE: How to spool under no load: Arrange the remote control lead so it cannot be caught in the winch.

Arrange the wire rope so it will not kink or tangle when spooled. Be sure any wire rope already on the spooling drum is wound tightly and evenly layered. Tighten and straighten the layer if necessary. Keep the wire rope under light tension and spool the wire rope back and onto the winch drum in even layers. Stop frequently to tighten and straighten the layers as necessary. Repeat this process until the winch hook is the same distance as the full length of the remote control from the winch. Pinch the hook between your thumb and forefinger and attach the hook strap. Hold the hook strap between the thumb and forefinger to keep tension on the wire rope. Walk the wire rope towards the fairlead, carefully spooling in the remaining wire rope. By pulsing the remote control switch.

19. Store the hook on the most outboard loop of the tow hook.

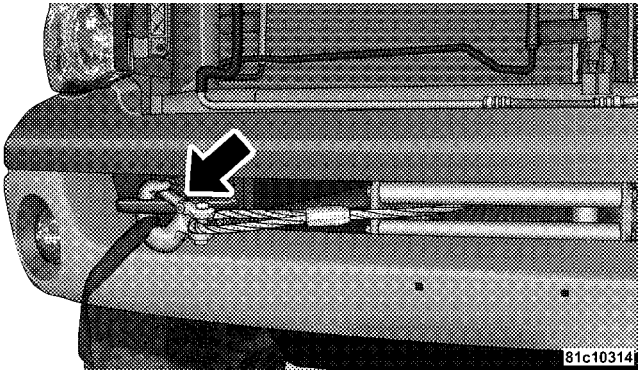

20. Disconnect the remote control. Disconnect the remote control cord from the control box and store in a clean and dry place. Winching operations are now complete. Put the cap on the solenoid plug-in.

NOTE: Always store the remote control in a protected, clean, dry area.

Rigging Techniques

Various winching situations will require application of other winching techniques. These could range from too little distance to achieve maximum pull using straight line rigging, simply increasing pulling power, or maintaining a straight-line pulling situation. You will have to assess what technique is correct for your situation. Think "safety" at all times.

How To Change The Pulling Direction

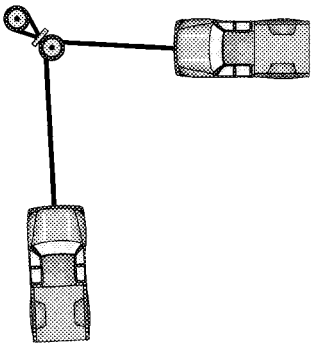

Change Pulling Directions

All winching operations should have a straight line from the winch to the object being pulled. This minimizes the wire rope collecting on one side of the drum affecting pulling efficiency and damaging wire rope. A snatch block, secured to a point directly in front of the vehicle

will enable you to change your pulling direction while still allowing the wire rope to be at 90° to wind properly onto the spooling drum.

Increasing Pulling Power

In some cases, you may find yourself needing more pulling power. The use of snatch blocks increases mechanical advantage and that increases your pulling power.

Double Line

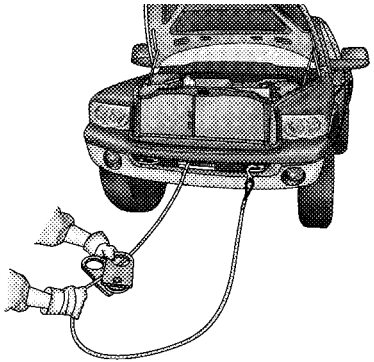

814a4734

Because pulling power decreases with the number of layers of wire rope on the winch drum, you can use a snatch block to double line out more wire rope. This decreases the number of layers of wire rope on the drum, and increases pulling power. Start by feeding out enough wire rope to free the winch hook. Attach the hook to your

vehicle's frame/tow hook and run the wire rope through a snatch block. Disengage the clutch and, using the snatch block, pull out enough wire to reach your anchor point. Do not attach the hook to the mounting kit. Secure to the anchor point with a tree trunk protector or choker chain. Attach the clevis/shackle. Attach the shackle to the two ends of the strap/chain, being careful not to over tighten (tighten and back-off 1/2 turn).

POWER STEERING

The standard power steering system will give you good vehicle response and increased ease of maneuverability in tight spaces. The system will provide mechanical steering capability if power assist is lost.

If for some reason the power assist is interrupted, it will still be possible to steer your vehicle. Under these conditions, you will observe a substantial increase in steering effort, especially at very low vehicle speeds and during parking maneuvers.

NOTE:

- Increased noise levels at the end of the steering wheel travel are considered normal and do not indicate that there is a problem with the power steering system.
- Upon initial start-up in cold weather, the power steering pump may make noise for a short amount of time. This is due to the cold, thick fluid in the steering system. This noise should be considered normal, and it does not in any way damage the steering system.

WARNING!

Continued operation with reduced power steering assist could pose a safety risk to yourself and others. Service should be obtained as soon as possible.

CAUTION!

Prolonged operation of the steering system at the end of the steering wheel travel will increase the steering fluid temperature and it should be avoided when possible. Damage to the power steering pump may occur.

Power Steering Fluid Check

Checking the power steering fluid level at a defined service interval is not required. The fluid should only be checked if a leak is suspected, abnormal noises are apparent, and/or the system is not functioning as anticipated. Coordinate inspection efforts through an authorized dealer.

CAUTION!

Do not use chemical flushes in your power steering system as the chemicals can damage your power steering components. Such damage is not covered by the New Vehicle Limited Warranty.

WARNING!

Fluid level should be checked on a level surface and with the engine off to prevent injury from moving parts and to ensure accurate fluid level reading. Do not overfill. Use only manufacturer's recommended power steering fluid.

If necessary, add fluid to restore to the proper indicated level. With a clean cloth, wipe any spilled fluid from all surfaces. Refer to "Fluids, Lubricants, and Genuine Parts" in "Maintaining Your Vehicle" for further information.

MULTI-DISPLACEMENT SYSTEM (MDS) (IF EQUIPPED) — 5.7L ENGINE ONLY

This feature offers improved fuel economy by shutting off four of the engine's eight cylinders during light load and cruise conditions. The system is automatic with no driver inputs or additional driving skills required.

NOTE: The MDS system may take some time to return to full functionality after a battery disconnect.

PARKING BRAKE

Before leaving the vehicle, make sure that the parking brake is fully applied. Also, be certain to leave the transmission in PARK.

The foot operated parking brake is located below the lower left corner of the instrument panel. To apply the park brake, firmly push the park brake pedal fully. To release the parking brake, pull the parking brake release handle.

Parking Brake Release

When the parking brake is applied with the ignition switch ON, the "Brake Warning Light" in the instrument cluster will illuminate.

NOTE:

- When the parking brake is applied and the transmission is placed in gear, the "Brake Warning Light" will flash. If vehicle speed is detected, a chime will sound to alert the driver. Fully release the parking brake before attempting to move the vehicle.
- This light only shows that the parking brake is applied. It does not show the degree of brake application.

When parking on a hill, it is important to turn the front wheels toward the curb on a downhill grade and away from the curb on an uphill grade. Apply the parking brake before placing the shift lever in PARK, otherwise the load on the transmission locking mechanism may make it difficult to move the shift lever out of PARK. The parking brake should always be applied whenever the driver is not in the vehicle.

WARNING!

- **Never use the PARK position as a substitute for the parking brake. Always apply the parking brake fully when parked to guard against vehicle movement and possible injury or damage.**
- **Never leave children alone in a vehicle. Leaving unattended children in a vehicle is dangerous for a number of reasons. A child or others could be seriously or fatally injured.**
- **Do not leave the key fob in the ignition switch. A child could operate power windows, other controls, or move the vehicle.**

(Continued)

WARNING! (Continued)

- **Be sure the parking brake is fully disengaged before driving; failure to do so can lead to brake failure and a collision.**
- **Always fully apply the parking brake when leaving your vehicle or it may roll and cause damage or injury. Also, be certain to leave the transmission in PARK. Failure to do so may cause the vehicle to roll and cause damage or injury.**

CAUTION!

If the Brake System Warning Light remains on with the parking brake released, a brake system malfunction is indicated. Have the brake system serviced by an authorized dealer immediately.

BRAKE SYSTEM

If power assist is lost for any reason (for example, repeated brake applications with the engine off), the brakes will still function. However, you will experience a substantial increase in braking effort to stop the vehicle.

If either the front or rear hydraulic system loses normal braking capability, the remaining system will still function with some loss of overall braking effectiveness. This will be evident by increased pedal travel during application, greater pedal force required to slow or stop, and activation of the "Brake Warning Light" and the "ABS Warning Light" (if equipped) during brake use.

3500 Dual Rear Wheel Models Only

The brake system power assist is provided by a hydro-boost unit which shares fluid with the power steering system. You may experience some clicking or hissing noises from the hydro-boost system during hard braking conditions.

NOTE: Under cold temperatures, pedal effort will be higher than normal until the power steering fluid reaches operating temperature.

ELECTRONIC BRAKE CONTROL SYSTEM

Your vehicle is equipped with an advanced electronic brake control system that includes Anti-Lock Brake System (ABS), Traction Control System (TCS), Brake Assist System (BAS), Hill Start Assist (HSA), Electronic Stability Control (ESC) and Trailer Sway Control (TSC). All of the systems work together to enhance vehicle stability and control in various driving conditions, and are commonly referred to as ESC.

Anti-Lock Brake System (ABS)

The ABS aids the driver in maintaining vehicle control under adverse braking conditions. The system controls hydraulic brake pressure to prevent wheel lockup and help avoid skidding on slippery surfaces during braking.

NOTE: ABS improves steering control of the vehicle during hard braking maneuvers.

WARNING!

- **ABS cannot prevent the natural laws of physics from acting on the vehicle, nor can it increase braking or steering efficiency beyond that afforded by the condition of the vehicle brakes and tires or the traction afforded.**
- **The ABS cannot prevent collisions, including those resulting from excessive speed in turns, following another vehicle too closely, or hydroplaning.**
- **The capabilities of an ABS-equipped vehicle must never be exploited in a reckless or dangerous manner which could jeopardize the user's safety or the safety of others.**

Traction Control System (TCS) – If Equipped

The TCS monitors the amount of wheel spin of each of the driven wheels. If wheel spin is detected, brake pressure is applied to the slipping wheel(s), and engine power is reduced to provide enhanced acceleration and stability. A feature of the TCS functions similarly to a limited-slip differential and controls the wheel spin across a driven axle. If one wheel on a driven axle is spinning faster than the other, the system will apply the brake of the spinning wheel. This will allow more engine torque to be applied to the wheel that is not spinning. This feature remains active even if TCS and ESC are in the "Partial Off" mode. Refer to "Electronic Stability Control (ESC)" in this section of this manual. This brake pressure modulation transfers drive torque from slipping to non-slipping wheels to provide optimal forward traction.

Brake Assist System (BAS) – If Equipped

The BAS is designed to optimize the vehicle's braking capability during emergency braking maneuvers. The BAS detects an emergency braking situation by sensing the rate and amount of brake application and then applies optimum pressure to the brakes. The system applies optimum pressure to the brakes in emergency braking conditions. This can help reduce braking distances. The BAS complements the ABS. Applying the brakes very quickly results in the best BAS assistance. To receive the benefit of BAS, you must apply continuous braking pressure during the stopping sequence. Do not reduce brake pedal pressure unless braking is no longer desired.

Once the brake pedal is released, the BAS is deactivated.

WARNING!

- **The BAS cannot prevent the natural laws of physics from acting on the vehicle, nor can it increase braking efficiency beyond that afforded by the condition of the vehicle brakes and tires or the traction afforded.**
- **The BAS cannot prevent collisions, including those resulting from excessive speed in turns, following another vehicle too closely, or hydroplaning.**
- **The capabilities of a BAS-equipped vehicle must never be exploited in a reckless or dangerous manner which could jeopardize the user's safety or the safety of others.**

Hill Start Assist (HSA) – If Equipped

The HSA system is designed to assist the driver in launching a vehicle on an incline. HSA will maintain the level of brake pressure the driver inputs for a short duration once the driver takes his foot off of the brake pedal. If the driver does not apply the throttle during this short duration, the system will release brake pressure and the vehicle will roll down the incline. The system will release brake pressure in proportion to the amount of throttle applied.

During operation, HSA will activate the brake control system and a clicking noise may occur. If your foot is on the brake pedal during operation you may feel a slight pedal movement. The clicking and pedal movement is normal and both will stop when HSA becomes inactive.

HSA Activation Criteria

The following criteria must be met in order for HSA to activate:

- Vehicle must be stopped
- Vehicle must be on a 7% or greater incline

- Gear selection matches vehicle uphill direction (i.e., vehicle facing uphill is in forward gear; vehicle backing uphill is in REVERSE gear).

WARNING!

There may be situations on minor hills (i.e., less than 7%), with a loaded vehicle or while pulling a trailer where the system will not activate and slight rolling may occur, which could cause a collision with another vehicle or object. Always remember the driver is responsible for braking the vehicle.

The system will only work if the intended direction of the vehicle and vehicle gear match. For example, if the intended direction is forward up a hill and the vehicle is in DRIVE and the activation criteria are met, HSA will activate.

The system will work in REVERSE and all forward gears, and will not activate if the vehicle is placed in NEUTRAL.

Towing And Hauling With HSA

The HSA system does not know if your vehicle is loaded or towing a trailer unless the TOW/HAUL switch, located on the center stack, is selected. When activated, the "TOW/HAUL Indicator Light" will illuminate in the instrument cluster. Refer to "Automatic Transmission" in "Starting and Operating" for further information. In order to accommodate the extra weight entailed under towing and hauling conditions and to increase driver comfort while launching on a hill, the system recognizes when the TOW/HAUL switch is activated and compensates by releasing brake pressure at a slower rate while throttle is applied in order to prevent the vehicle from rolling down the hill.

WARNING!

- **If you use a trailer brake controller with your trailer, your trailer brakes may be activated and deactivated with the brake switch. If so, when the brake pedal is released, there may not be enough brake pressure to hold the vehicle and trailer on a hill and this could cause a collision with another vehicle or object behind you. In order to avoid rolling down the incline while resuming acceleration, manually activate the trailer brake or apply more vehicle brake pressure prior to releasing the brake pedal. Always remember the driver is responsible for braking the vehicle.**

(Continued)

WARNING! (Continued)

- **HSA is not a parking brake. If you stop the vehicle on a hill without putting the transmission in PARK or using the parking brake, it will roll down the incline and could cause a collision with another vehicle or object. Always remember to use the parking brake while parking on a hill and that the driver is responsible for braking the vehicle.**

HSA Off

Non-EVIC Equipped Vehicles

If you wish to turn off the HSA system, follow this procedure:

1. Start with the engine OFF, and the vehicle in PARK with the wheels straight.

2. Start the engine.

3. With the engine running and the brake applied, rotate the steering wheel 180° counterclockwise from center.

4. Press the "ESC Off" switch four times within 20 seconds. The "ESC Off Indicator Light" should appear and disappear four times.

5. Rotate the steering wheel 360° clockwise (180° clockwise from center).

6. Cycle ignition switch OFF then ON.

7. If the sequence was completed properly, the "ESC Off Indicator Light" will blink several times to confirm HSA is off.

Steps 1 through 7 must be completed within 90 seconds to turn off HSA. Repeat steps 1 through 7 to re-enable HSA functionality.

EVIC Equipped Vehicles

HSA is a Customer Programmable Feature on a EVIC equipped vehicle. If you wish to turn off the HSA feature, refer to "Electronic Vehicle Information Center (EVIC)/ Customer Programmable Features" in "Understanding Your Instrument Panel" for further information.

Electronic Stability Control (ESC) – If Equipped

The ESC system enhances directional control and stability of the vehicle under various driving conditions. ESC corrects for oversteering or understeering of the vehicle by applying the brake of the appropriate wheel to assist in counteracting the oversteer or understeer condition. Engine power may also be reduced to help the vehicle maintain the desired path.

ESC uses sensors in the vehicle to determine the vehicle path intended by the driver and compares it to the actual path of the vehicle. When the actual path does not match

the intended path, ESC applies the brake of the appropriate wheel to assist in counteracting the oversteer or understeer condition.

- Oversteer - when the vehicle is turning more than appropriate for the steering wheel position.
- Understeer - when the vehicle is turning less than appropriate for the steering wheel position.

All Two-Wheel Drive Vehicles And Four-Wheel Drive Vehicles In 2WD, 4WD AUTO, Or 4WD LOCK Modes Can Choose The Following ESC Operating Modes:

ESC On

This is the normal operating mode for ESC in 2WD/4WD AUTO/4WD LOCK modes and in 2WD vehicles. Whenever the vehicle is started or the transfer case (if equipped) is shifted from 4WD LOW or Neutral, back to 4WD LOCK or 4WD AUTO, the ESC system will be in this mode. This mode should be used for almost all driving situations. ESC should only be turned to "Partial Off" or "ESP Off" for specific reasons as noted below.

ESC Partial Off

This mode is entered by momentarily pressing the "ESC Off" switch. When in "Partial Off" mode, the TCS portion of ESC, except for the "limited slip" feature described in the TCS section, has been disabled and the "ESC Off Indicator Light" will be illuminated. All other stability features of ESC function normally. This mode is intended to be used if the vehicle is in deep snow, sand, or gravel conditions and more wheel spin than ESC would normally allow is required to gain traction. To turn ESC on again, momentarily press the "ESC Off" switch. This will restore the normal "ESC On" mode of operation.

NOTE: To improve the vehicle's traction when driving with snow chains or starting off in deep snow, sand or gravel, it may be desirable to switch to the "Partial Off"

mode by pressing the "ESC Off" switch. Once the situation requiring ESC to be switched to the "Partial Off" mode is overcome, turn ESC back on by momentarily pressing the "ESC Off" switch. This may be done while the vehicle is in motion.

WARNING!

In the "Partial Off" mode, the engine torque reduction and stability features are desensitized. Therefore, the enhanced vehicle stability offered by ESC is unavailable.

All Four-Wheel Drive Vehicles In 4WD AUTO And 4WD LOCK Modes Can Also Choose The Following ESC Operating Mode. This Is The Only ESC Operating Mode in 4WD LOW:

Full Off

This mode is intended for off-road use when ESC stability features could inhibit vehicle maneuverability due to trail conditions. This mode is entered by pressing and holding the "ESC Off" switch for five seconds when the vehicle is stopped and the engine is running. After five seconds, the "ESP Off Indicator Light" will illuminate and the "ESC Off" message will appear in the odometer. Press and release the trip odometer button located on the instrument cluster to clear this message.

NOTE: The "ESC OFF" message will display and the audible chime will sound when the shift lever is placed

into the PARK position from any other position and then moved out of the PARK position. This will occur even if the message was previously cleared.

In this mode, ESC and TCS except for the “limited slip” feature described in the TCS section are turned off until the vehicle reaches a speed of 40 mph (64 km/h). At 40 mph (64 km/h) the system returns to “Partial Off” mode, described above. When the vehicle speed drops below 35 mph (56 km/h) the ESC system shuts off. ESC is off at low vehicle speeds so that it will not interfere with off-road driving but ESC function returns to provide the stability feature at speeds above 40 mph (64 km/h). The “ESC Off Indicator Light” will always be illuminated when ESC is off. To turn ESC on again, momentarily press the “ESC Off” switch. This will restore the normal “ESC On” mode of operation.

“ESC Off” is the only operating mode for ESC in 4WD LOW. Whenever the vehicle is started in 4WD LOW or the transfer case (if equipped) is shifted from 4WD LOCK or NEUTRAL, to 4WD LOW, the ESC system will be in this mode.

WARNING!

With the ESC switched off, the enhanced vehicle stability offered by ESC is unavailable. In an emergency evasive maneuver the ESC system will not engage to assist in maintaining stability. “ESC Off” mode is intended for off-highway or off-road use only.

ESC Activation/Malfunction Indicator Light And ESC OFF Indicator Light

The “ESC Activation/Malfunction Indicator Light” in the instrument cluster will come on when the ignition switch is turned to the ON position. It should go out with the engine running. If the “ESC Activation/Malfunction Indicator

Light" comes on continuously with the engine running, a malfunction has been detected in the ESC system. If this light remains on after several ignition cycles, and the vehicle has been driven several miles (kilometers) at speeds greater than 30 mph (48 km/h), see your authorized dealer as soon as possible to have the problem diagnosed and corrected.

The "ESC Activation/Malfunction Indicator Light" (located in the instrument cluster) starts to flash as soon as the tires lose traction and the ESC system becomes active. The "ESC Activation/Malfunction Indicator Light" also flashes when TCS is active. If the "ESC Activation/Malfunction Indicator Light" begins to flash during acceleration, ease up on the accelerator and apply as little throttle as possible. Be sure to adapt your speed and driving to the prevailing road conditions.

NOTE:

- The "ESC Activation/Malfunction Indicator Light" and the "ESC OFF Indicator Light" come on momentarily each time the ignition switch is turned ON.
- Each time the ignition is turned ON, the ESC system will be ON even if it was turned off previously.
- The ESC system will make buzzing or clicking sounds when it is active. This is normal; the sounds will stop when ESC becomes inactive following the maneuver that caused the ESC activation.

The "ESC OFF Indicator Light" indicates the Electronic Stability Control (ESC) is off.

Trailer Sway Control (TSC) – If Equipped

The TSC system uses sensors in the vehicle to recognize an excessively swaying trailer and will take the appropriate actions to attempt to stop the sway. The system may reduce engine power and apply the brake of the appropriate wheel(s) to counteract the sway of the trailer. TSC will become active automatically once an excessively swaying trailer is recognized. No driver action is required. Note that TSC cannot stop all trailers from swaying. Always use caution when towing a trailer and follow the trailer tongue weight recommendations. Refer to "Trailer Towing" in "Starting and Operating" for further information. When TSC is functioning, the "ESP Off Indicator Light" will flash, the engine power may be reduced and you may feel the brakes being applied to individual wheels to attempt to stop the trailer from swaying. TSC is disabled when the ESC system is in the "Partial Off" or "Full Off" modes.

TSC is only active in the default "ESC On" mode. TSC can be disabled by pressing the "ESC Off" switch and entering "ESC Partial Off" mode. It is not active in the "ESC Partial Off" or "ESC Off" modes. Refer to the ESC portion of this section for an explanation of the different ESC operating modes.

WARNING!

If TSC activates while driving, slow the vehicle down, stop at the nearest safe location, and adjust the trailer load to eliminate trailer sway.

TIRE SAFETY INFORMATION

Tire Markings

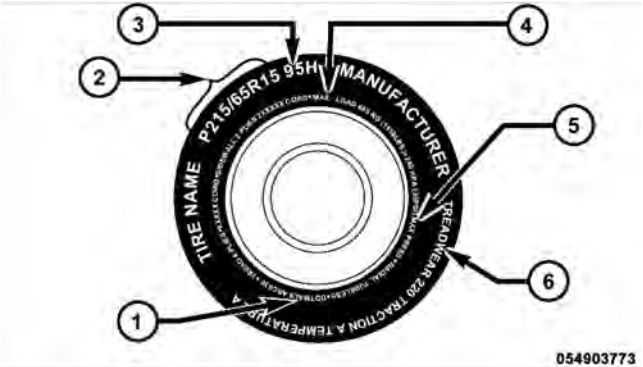

1 — U.S. DOT Safety Standards Code (TIN)	4 — Maximum Load
2 — Size Designation	5 — Maximum Pressure
3 — Service Description	6 — Treadwear, Traction and Temperature Grades

NOTE:

- P (Passenger) - Metric tire sizing is based on U.S. design standards. P-Metric tires have the letter “P” molded into the sidewall preceding the size designation. Example: P215/65R15 95H.
- European-Metric tire sizing is based on European design standards. Tires designed to this standard have the tire size molded into the sidewall beginning with the section width. The letter ″P″ is absent from this tire size designation. Example: 215/65R15 96H.
- LT (Light Truck) - Metric tire sizing is based on U.S. design standards. The size designation for LT-Metric tires is the same as for P-Metric tires except for the letters “LT” that are molded into the sidewall preceding the size designation. Example: LT235/85R16.
- Temporary spare tires are high-pressure compact spares designed for temporary emergency use only.

Tires designed to this standard have the letter "T" molded into the sidewall preceding the size designation. Example: T145/80D18 103M.

- High flotation tire sizing is based on U.S. design standards and it begins with the tire diameter molded into the sidewall. Example: 31x10.5 R15 LT.

Tire Sizing Chart

EXAMPLE:
Size Designation:
P = Passenger car tire size based on U.S. design standards **"....blank...."** = Passenger car tire based on European design standards **LT** = Light truck tire based on U.S. design standards **T** = Temporary spare tire **31** = Overall diameter in inches (in)
215 = Section width in millimeters (mm)
65 = Aspect ratio in percent (%) — Ratio of section height to section width of tire **10.5** = Section width in inches (in)
R = Construction code — "R" means radial construction —"D" means diagonal or bias construction

EXAMPLE:
15 = Rim diameter in inches (in)
Service Description:
95 = Load Index — A numerical code associated with the maximum load a tire can carry
H = Speed Symbol — A symbol indicating the range of speeds at which a tire can carry a load corresponding to its load index under certain operating conditions — The maximum speed corresponding to the speed symbol should only be achieved under specified operating conditions (i.e., tire pressure, vehicle loading, road conditions, and posted speed limits)
Load Identification:
"....blank...." = Absence of any text on the sidewall of the tire indicates a Standard Load (SL) tire
Extra Load (XL) = Extra load (or reinforced) tire
Light Load = Light load tire
C, D, E = Load range associated with the maximum load a tire can carry at a specified pressure
Maximum Load — Maximum load indicates the maximum load this tire is designed to carry
Maximum Pressure — Maximum pressure indicates the maximum permissible cold tire inflation pressure for this tire

Tire Identification Number (TIN)

The TIN may be found on one or both sides of the tire, however, the date code may only be on one side. Tires with white sidewalls will have the full TIN, including the date code, located on the white sidewall side of the tire. Look for the TIN on the outboard side of black sidewall tires as mounted on the vehicle. If the TIN is not found on the outboard side, then you will find it on the inboard side of the tire.

EXAMPLE:
DOT MA L9 ABCD 0301
DOT = Department of Transportation — This symbol certifies that the tire is in compliance with the U.S. Department of Transportation tire safety standards and is approved for highway use
MA = Code representing the tire manufacturing location (two digits)
L9 = Code representing the tire size (two digits)
ABCD = Code used by the tire manufacturer (one to four digits)
03 = Number representing the week in which the tire was manufactured (two digits) —03 means the 3rd week.
01 = Number representing the year in which the tire was manufactured (two digits) —01 means the year 2001 — Prior to July 2000, tire manufacturers were only required to have one number to represent the year in which the tire was manufactured. Example: 031 could represent the 3rd week of 1981 or 1991

Tire Terminology And Definitions

Term	Definition
B-Pillar	The vehicle B-Pillar is a structural member of the body located between the front and rear door (of a four-door vehicle) running from the sill to the roof.
Cold Tire Pressure	Cold tire inflation pressure is defined as the tire pressure after the vehicle has not been driven for at least 3 hours, or driven less than 1 mile (1.6 km) after sitting for a three hour period. Inflation pressure is measured in units of PSI (pounds per square inch) or KPa (kilopascals).
Maximum Inflation Pressure	The maximum inflation pressure is the maximum permissible cold tire inflation pressure for this tire. The max inflation pressure is molded into the sidewall.
Recommended Inflation Pressure	Vehicle manufacturer's recommended tire inflation pressure as shown on the tire placard.
Tire Placard	A paper label permanently attached to the vehicle showing the vehicle's loading capacity, the original equipment tire size and the recommended inflation pressure.

Tire Loading And Tire Pressure

Tire Placard Location

NOTE: The proper cold tire inflation pressure is listed on the driver's side B-Pillar.

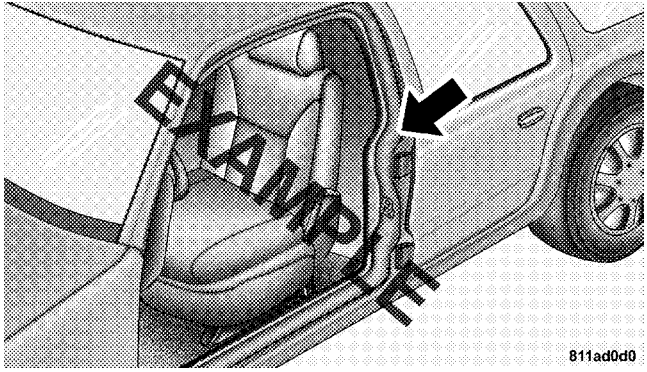

Tire Placard Location

Tire And Loading Information Placard

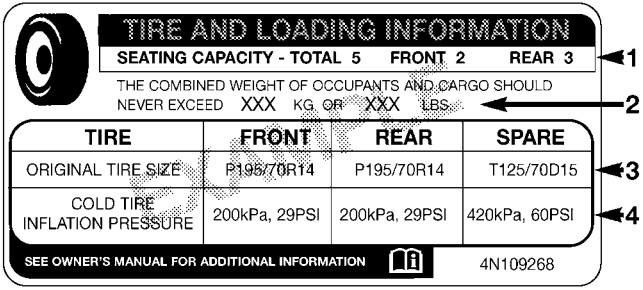

Tire and Loading Information Placard

This placard tells you important information about the:
1) number of people that can be carried in the vehicle
2) total weight your vehicle can carry
3) tire size designed for your vehicle
4) cold tire inflation pressures for the front, rear, and spare tires.

Loading

The vehicle maximum load on the tire must not exceed the load carrying capacity of the tire on your vehicle. You will not exceed the tire's load carrying capacity if you adhere to the loading conditions, tire size, and cold tire inflation pressures specified on the Tire and Loading Information placard and in the "Vehicle Loading" section of this manual.

NOTE: Under a maximum loaded vehicle condition, gross axle weight ratings (GAWRs) for the front and rear axles must not be exceeded. For further information on GAWRs, vehicle loading, and trailer towing, refer to "Vehicle Loading" in this section.

To determine the maximum loading conditions of your vehicle, locate the statement "The combined weight of occupants and cargo should never exceed XXX lbs or XXX kg" on the Tire and Loading Information placard. The combined weight of occupants, cargo/luggage and trailer tongue weight (if applicable) should never exceed the weight referenced here.

Steps For Determining Correct Load Limit

1. Locate the statement "The combined weight of occupants and cargo should never exceed XXX lbs or XXX kg" on your vehicle's placard.

2. Determine the combined weight of the driver and passengers that will be riding in your vehicle.

3. Subtract the combined weight of the driver and passengers from XXX lbs or XXX kg.

4. The resulting figure equals the available amount of cargo and luggage load capacity. For example, if "XXX" amount equals 1,400 lbs (635 kg) and there will be five 150 lb (68 kg) passengers in your vehicle, the amount of

available cargo and luggage load capacity is 650 lbs (295 kg) (since 5 x 150 = 750, and 1400 – 750 = 650 lbs [295 kg]).

5. Determine the combined weight of luggage and cargo being loaded on the vehicle. That weight may not safely exceed the available cargo and luggage load capacity calculated in Step 4.

6. If your vehicle will be towing a trailer, load from your trailer will be transferred to your vehicle. Consult this manual to determine how this reduces the available cargo and luggage load capacity of your vehicle.

NOTE:

- The following table shows examples on how to calculate total load, cargo/luggage, and towing capacities of your vehicle with varying seating configurations and number and size of occupants. This table is for illustration purposes only and may not be accurate for the seating and load carry capacity of your vehicle.
- For the following example, the combined weight of occupants and cargo should never exceed 865 lbs (392 kg).

Occupants			Combined weight of occupants and cargo from Tire Placard	MINUS	Combined Occupant's weight	=	AVAILABLE Cargo/Luggage and Trailer Tongue Weight
TOTAL	FRONT	REAR					
EXAMPLE 1							
5	2	3	865 lbs	minus	Occupant 1: 200 lbs Occupant 2: 130 lbs Occupant 3: 160 lbs Occupant 4: 100 lbs Occupant 5: 80 lbs TOTAL WEIGHT: 670 lbs 670 lbs	=	195 lbs
EXAMPLE 2							
3	2	1	865 lbs	minus	Occupant 1: 210 lbs Occupant 2: 180 lbs Occupant 3: 150 lbs TOTAL WEIGHT: 540 lbs 540 lbs	=	325 lbs
EXAMPLE 3							
2	2	0	865 lbs	minus	Occupant 1: 200 lbs Occupant 2: 200 lbs TOTAL WEIGHT: 400 lbs 400 lbs	=	465 lbs

EXAMPLE

811a4d11

WARNING!

Overloading of your tires is dangerous. Overloading can cause tire failure, affect vehicle handling, and increase your stopping distance. Use tires of the recommended load capacity for your vehicle. Never overload them.

TIRES — GENERAL INFORMATION

Tire Pressure

Proper tire inflation pressure is essential to the safe and satisfactory operation of your vehicle. Three primary areas are affected by improper tire pressure:

Safety

WARNING!

- **Improperly inflated tires are dangerous and can cause collisions.**
- **Under-inflation increases tire flexing and can result in over-heating and tire failure.**
- **Over-inflation reduces a tire's ability to cushion shock. Objects on the road and chuckholes can cause damage that result in tire failure.**
- **Over-inflated or under-inflated tires can affect vehicle handling and can fail suddenly, resulting in loss of vehicle control.**
- **Unequal tire pressures can cause steering problems. You could lose control of your vehicle.**

(Continued)

WARNING! (Continued)

- **Unequal tire pressures from one side of the vehicle to the other can cause the vehicle to drift to the right or left.**
- **Always drive with each tire inflated to the recommended cold tire inflation pressure.**

Economy

Improper inflation pressures can cause uneven wear patterns to develop across the tire tread. These abnormal wear patterns will reduce tread life resulting in a need for earlier tire replacement. Under-inflation also increases tire rolling resistance resulting in higher fuel consumption.

Ride Comfort And Vehicle Stability

Proper tire inflation contributes to a comfortable ride. Over-inflation produces a jarring and uncomfortable ride.

Tire Inflation Pressures

The proper cold tire inflation pressure is listed on the driver's side "B" Pillar or rear edge of the driver's side door.

Some vehicles may have Supplemental Tire Pressure Information for vehicle loads that are less than the maximum loaded vehicle condition. Refer to "Supplemental Tire Pressure Information" in "Starting and Operating" for further information.

The pressure should be checked and adjusted as well as inspecting for signs of tire wear or visible damage at least once a month. Use a good quality pocket-type gauge to check tire pressure. Do not make a visual judgement when determining proper inflation. Radial tires may look properly inflated even when they are under-inflated.

CAUTION!

After inspecting or adjusting the tire pressure, always reinstall the valve stem cap. This will prevent moisture and dirt from entering the valve stem, which could damage the valve stem.

Inflation pressures specified on the placard are always "cold tire inflation pressure." Cold tire inflation pressure is defined as the tire pressure after the vehicle has not been driven for at least three hours or driven less than 1 mile (1.6 km) after a three hour period. The cold tire inflation pressure must not exceed the maximum inflation pressure molded into the tire sidewall.

Check tire pressures more often if subject to a wide range of outdoor temperatures as tire pressures vary with temperature changes.

Tire pressures change by approximately 1 psi (7 kPa) per 12°F (7°C) of air temperature change. Keep this in mind when checking tire pressure inside a garage, especially in the Winter.

Example: If garage temperature = 68°F (20°C) and the outside temperature = 32°F (0°C) then the cold tire inflation pressure should be increased by 3 psi (21 kPa), which equals 1 psi (7 kPa) for every 12°F (7°C) for this outside temperature condition.

Tire pressure may increase from 2 to 6 psi (13 to 40 kPa) during operation. Do not reduce this normal pressure build up or your tire pressure will be too low.

Tire Pressures For High Speed Operation

The manufacturer advocates driving at safe speeds within posted speed limits. Where speed limits or conditions are such that the vehicle can be driven at high speeds, maintaining correct tire inflation pressure is very important. Increased tire pressure and reduced vehicle

loading may be required for high-speed vehicle operation. Refer to original equipment or an authorized tire dealer for recommended safe operating speeds, loading and cold tire inflation pressures.

WARNING!

High speed driving with your vehicle under maximum load is dangerous. The added strain on your tires could cause them to fail. You could have a serious collision. Do not drive a vehicle loaded to the maximum capacity at continuous speeds above 75 mph (120 km/h).

Radial Ply Tires

WARNING!

Combining radial ply tires with other types of tires on your vehicle will cause your vehicle to handle poorly. The instability could cause a collision. Always use radial ply tires in sets of four (or six, in the case of trucks with dual rear wheels). Never combine them with other types of tires.

Cuts and punctures in radial tires are repairable only in the tread area because of sidewall flexing. Consult your authorized tire dealer for radial tire repairs.

Spare Tire Matching Original Equipped Tire And Wheel – If Equipped

Your vehicle may be equivalent with a spare tire and wheel in look and function as the original equipment tire and wheel found on the front or rear axle of your vehicle. This spare tire may be used in the tire rotation for your vehicle. If your vehicle has this option refer to an authorized tire dealer for the recommended tire rotation pattern.

If your vehicle is not equipped with an original equipment tire and wheel as a spare, a non-matching temporary emergency use spare may be equipped with your vehicle. Temporary use spares are engineered to be used only with your vehicle. Your vehicle may be equipped with one of the following types of non-matching temporary use spares; compact, full size, or limited-use. Do not install more than one non-matching temporary use spare tire/wheel on the vehicle at any given time.

CAUTION!

Because of the reduced ground clearance, do not take your vehicle through an automatic car wash with a compact, full size or limited-use temporary spare installed. Damage to the vehicle may result.

Compact Spare Tire – If Equipped

The compact spare is for temporary emergency use only. You can identify if your vehicle is equipped with a compact spare by looking at the spare tire description on the Tire and Loading Information Placard located on the driver's side door opening or on the sidewall of the tire. Compact spare tire descriptions begin with the letter "T" or "S" preceding the size designation. Example: T145/80D18 103M.

T, S = Temporary Spare Tire

Since this tire has limited tread life the original equipment tire should be repaired (or replaced) and reinstalled on your vehicle at the first opportunity.

Do not install a wheel cover or attempt to mount a conventional tire on the compact spare wheel, since the wheel is designed specifically for the compact spare tire. Do not install more than one compact spare tire and wheel on the vehicle at any given time

WARNING!

Compact spares are for temporary emergency use only. With these spares, do not drive more than 50 mph (80 km/h). Temporary use spares have limited tread life. When the tread is worn to the tread wear indicators, the temporary use spare tire needs to be replaced. Be sure to follow the warnings, which apply to your spare. Failure to do so could result in spare tire failure and loss of vehicle control.

Full Size Spare – If Equipped

The full size spare is for temporary emergency use only. This tire may look like the original equipped tire on the front or rear axle of your vehicle, but it is not. This spare tire may have limited tread life. When the tread is worn to the tread wear indicators, the temporary use full size spare tire needs to be replaced. Since it is not the same as your original equipment tire, replace (or repair) the original equipment tire and reinstall on the vehicle at the first opportunity.

Limited-Use Spare – If Equipped

The limited-use spare tire is for temporary emergency use only. This tire is identified by a label located on the limited-use spare wheel. This label contains the driving limitations for this spare. This tire may look like the original equipped tire on the front or rear axle of your vehicle, but it is not. Installation of this limited-use spare tire affects vehicle handling. Since it is not the same as

your original equipment tire, replace (or repair) the original equipment tire and reinstall on the vehicle at the first opportunity.

WARNING!

Limited-use spares are for emergency use only. Installation of this limited-use spare tire affects vehicle handling. With this tire, do not drive more than the speed listed on the limit-use spare wheel. Keep inflated to the cold tire inflation pressure listed on your Tire and Loading Information Placard located on the driver's side door opening. Replace (or repair) the original equipment tire at the first opportunity and reinstall it on your vehicle. Failure to do so could result in loss of vehicle control.

Tire Spinning

When stuck in mud, sand, snow, or ice conditions, do not spin your vehicle's wheels faster than 30 mph (48 km/h) or for longer than 30 seconds continuously without stopping when you are stuck.

Refer to "Freeing A Stuck Vehicle" in "What To Do In Emergencies" for further information.

WARNING!

Fast spinning tires can be dangerous. Forces generated by excessive wheel speeds may cause tire damage or failure. A tire could explode and injure someone. Do not spin your vehicle's wheels faster than 30 mph (48 km/h) or for more than 30 seconds continuously when you are stuck, and do not let anyone near a spinning wheel, no matter what the speed.

Tread Wear Indicators

Tread wear indicators are in the original equipment tires to help you in determining when your tires should be replaced.

1 — Worn Tire
2 — New Tire

These indicators are molded into the bottom of the tread grooves. They will appear as bands when the tread depth becomes 1/16 in (2 mm). When the tread is worn to the tread wear indicators, the tire should be replaced.

Life Of Tire

The service life of a tire is dependent upon varying factors including, but not limited to:

- Driving style
- Tire pressure
- Distance driven

WARNING!

Tires and the spare tire should be replaced after six years, regardless of the remaining tread. Failure to follow this warning can result in sudden tire failure. You could lose control and have a collision resulting in serious injury or death.

Keep dismounted tires in a cool, dry place with as little exposure to light as possible. Protect tires from contact with oil, grease, and gasoline.

Replacement Tires

The tires on your new vehicle provide a balance of many characteristics. They should be inspected regularly for wear and correct cold tire inflation pressure. The manufacturer strongly recommends that you use tires equivalent to the originals in size, quality and performance when replacement is needed. (Refer to the paragraph on "Tread Wear Indicators"). Refer to the "Tire and Loading Information" placard for the size designation of your tire. The Load Index and Speed Symbol for your tire will be found on the original equipment tire sidewall. See the Tire Sizing Chart example found in the Tire Safety Information section of this manual for more information relating to the Load Index and Speed Symbol of a tire.

It is recommended to replace the two front tires or two rear tires as a pair. Replacing just one tire can seriously affect your vehicle's handling. If you ever replace a wheel, make sure that the wheel's specifications match those of the original wheels.

It is recommended you contact your original equipment or an authorized tire dealer with any questions you may have on tire specifications or capability. Failure to use equivalent replacement tires may adversely affect the safety, handling, and ride of your vehicle.

WARNING!

- **Do not use a tire, wheel size or rating other than that specified for your vehicle. Some combinations of unapproved tires and wheels may change suspension dimensions and performance characteristics, resulting in changes to steering, handling, and braking of your vehicle. This can cause unpredictable handling and stress to steering and suspension components. You could lose control and have a collision resulting in serious injury or death. Use only the tire and wheel sizes with load ratings approved for your vehicle.**
- **Never use a tire with a smaller load index or capacity other than what was originally equipped on your vehicle. Using a tire with a smaller load index could result in tire overloading and failure. You could lose control and have a collision.**

(Continued)

WARNING! (Continued)

- **Failure to equip your vehicle with tires having adequate speed capability can result in sudden tire failure and loss of vehicle control.**

CAUTION!

Replacing original tires with tires of a different size may result in false speedometer and odometer readings.

SUPPLEMENTAL TIRE PRESSURE INFORMATION — IF EQUIPPED

A light load vehicle condition is defined as two passengers [150 lbs (68 kg) each] plus 200 lbs (91 kg) of cargo. Cold tire inflation pressures for a lightly loaded vehicle will be found on the face of the driver's door.

TIRE CHAINS

Use "Class S" chains, or other traction aids that meet SAE Type "S" specifications.

Use "Class U" chains on 2500/3500 model trucks, or other traction aids that meet SAE Type "U" specifications.

NOTE: Chains must be the proper size for the vehicle as recommended by the chain manufacturer.

CAUTION!

To avoid damage to your vehicle, tires or chains, observe the following precautions:

- **Because of limited chain clearance between tires and other suspension components, it is important that only chains in good condition are used. Broken chains can cause serious vehicle damage. Stop the vehicle immediately if noise occurs that could suggest chain breakage. Remove the damaged parts of the chain before further use.**
- **Install chains as tightly as possible and then retighten after driving about 0.5 mile (0.8 km).**
- **Do not exceed 45 mph (72 km/h).**
- **Drive cautiously and avoid severe turns and large bumps, especially with a loaded vehicle.**

(Continued)

CAUTION! (Continued)

- **Do not install tire chains on front wheels of 4x2 vehicles.**
- **Do not drive for a prolonged period on dry pavement.**
- **Observe the tire chain manufacturer's instructions on method of installation, operating speed, and conditions for usage. Always use the lower suggested operating speed of the chain manufacturer if different than the speed recommended by the manufacturer.**

These cautions apply to all chain traction devices, including link and cable (radial) chains.

NOTE:

- On 4x2 and 4x4 1500 model trucks, the use of class "S" snow chains is permitted on the rear wheels only of trucks equipped with P265/70R17 tires.
- On 4x2 2500 model trucks, the use of class "U" snow chains is permitted on the rear wheels only of trucks equipped with LT245/70R17E or LT265/70R17E tires.
- On 4x4 2500 model trucks, the use of class "U" snow chains is permitted on the rear wheels only of trucks equipped with LT245/70R17E, LT265/70R17E, or LT285/70R17D tires.
- On 4x2 and 4x4 3500 SRW (Single Rear Wheel) model trucks, the use of class "U" snow chains is permitted on the rear wheels only of trucks equipped with LT265/70R17E tires.
- On 4x2 and 4x4 3500 DRW (Dual Rear Wheel) model trucks, the use of class "U" snow chains is permitted on the front and rear wheels of trucks equipped with LT235/80R17E tires.

CAUTION!

Do not use tire chains on the front wheels of any model except for 3500 DRW (Dual Rear Wheel) trucks equipped with LT235/80R17E tires. There may not be adequate clearance for the chains and you are risking structural or body damage to your vehicle. Do not use tire chains on the rear wheels of 1500 model trucks equipped with LT275/70R17, P275/60R20, or 285/45R22 tires. There may not be adequate clearance for the chains and you are risking structural or body damage to your vehicle.

SNOW TIRES

Some areas of the country require the use of snow tires during the winter. All season tires can be identified by the M+S designation on the tire sidewall.

If you need snow tires, select tires equivalent in size and type to the original equipment tires. Use snow tires only in sets of four; failure to do so may adversely affect the safety and handling of your vehicle.

Snow tires generally have lower speed ratings than what was originally equipped with your vehicle and should not be operated at sustained speeds over 75 mph (120 km/h). For speeds above 75 mph (120 km/h) refer to original equipment or an authorized tire dealer for recommended safe operating speeds, loading and cold tire inflation pressures.

While studded tires improve performance on ice, skid and traction capability on wet or dry surfaces may be poorer than that of non-studded tires. Some states prohibit studded tires; therefore, local laws should be checked before using these tire types.

TIRE ROTATION RECOMMENDATIONS

Tires on the front and rear axles of vehicles operate at different loads and perform different steering, driving, and braking functions. For these reasons, they wear at unequal rates.

These effects can be reduced by timely rotation of tires. The benefits of rotation are especially worthwhile with aggressive tread designs such as those on all season type tires. Rotation will increase tread life, help to maintain mud, snow and wet traction levels and contribute to a smooth, quiet ride.

Refer to the "Maintenance Schedule" for the proper maintenance intervals. More frequent rotation is permissible if desired. The reasons for any rapid or unusual wear should be corrected prior to rotation being performed.

The suggested rotation method is the "forward cross" shown in the following diagram. This rotation pattern does not apply to some directional tires that must not be reversed.

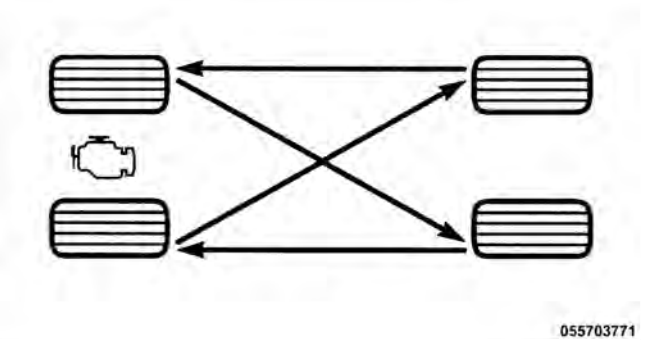

Tire Rotation

Directional Tires – If Equipped

For the R/T package with 22″ tires & wheels, tire rotation must be performed with consideration of the tire rotation direction. The recommended rotation pattern for directional tires is shown below.

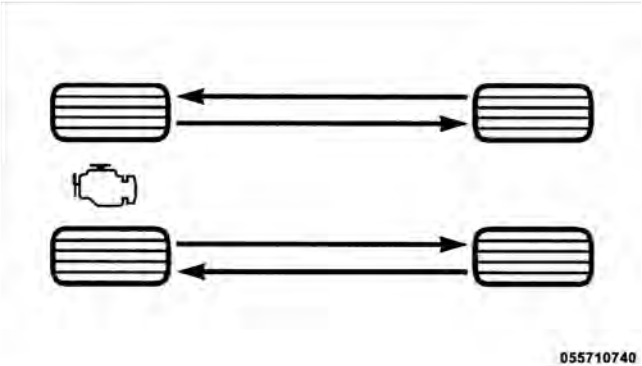

Tire Rotation

Dual Rear Wheels

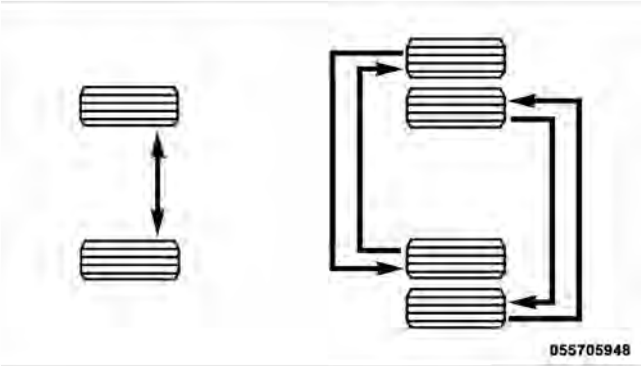

Tire Rotation

The tires used on dual wheel assemblies should be matched for wear to prevent overloading one tire in a set. To check if tires are even, lay a straight edge across all four tires. The straight edge should touch all the tires.

CAUTION!

3500 Dual Rear Tires have only one approved direction of rotation. This is to accommodate the asymmetrical design (tread pattern) of the On/Off-Road tire and the use of Outline White Letter (OWL) tires.

- **When replacing a flat, the spare tire may have to be remounted on the rim, or installed at a different location, to maintain the correct placement of the tire on the wheel relative to the tire/wheel position on the truck. For example, if the spare is used to replace an outer rear tire it will have to be remounted on the rim so that the wheel is dished inward. That way the tread design of asymmetrical tires and the white writing of the OWL tires will maintain proper position.**

TIRE PRESSURE MONITOR SYSTEM (TPMS)

The Tire Pressure Monitor System (TPMS) will warn the driver of a low tire pressure based on the vehicle recommended cold placard pressure.

The tire pressure will vary with temperature by about 1 psi (6.9 kPa) for every 12°F (6.5°C). This means that when the outside temperature decreases, the tire pressure will decrease. Tire pressure should always be set based on cold inflation tire pressure. This is defined as the tire pressure after the vehicle has not been driven for at least three hours, or driven less than 1 mile (1.6 km) after a three hour period. The cold tire inflation pressure must not exceed the maximum inflation pressure molded into the tire sidewall. Refer to “Tires – General Information” in “Starting and Operating” for information on how to properly inflate the vehicle’s tires. The tire pressure will also increase as the vehicle is driven - this is normal and there should be no adjustment for this increased pressure.

The TPMS will warn the driver of a low tire pressure if the tire pressure falls below the low-pressure warning limit for any reason, including low temperature effects and natural pressure loss through the tire.

The TPMS will continue to warn the driver of low tire pressure as long as the condition exists, and will not turn off until the tire pressure is at or above the recommended cold placard pressure. Once the low tire pressure warning (Tire Pressure Monitoring [TPM] Telltale Light) illuminates, you must increase the tire pressure to the recommended cold placard pressure in order for the TPM Telltale Light to turn off. The system will automatically update and the TPM Telltale Light will turn off once the system receives the updated tire pressures. The vehicle may need to be driven for up to 20 minutes above 15 mph (24 km/h) in order for the TPMS to receive this information.

For example, your vehicle may have a recommended cold (parked for more than three hours) placard pressure of 30 psi (207 kPa). If the ambient temperature is 68°F (20°C) and the measured tire pressure is 27 psi (186 kPa), a temperature drop to 20°F (-7°C) will decrease the tire pressure to approximately 23 psi (158 kPa). This tire pressure is sufficiently low enough to turn ON the TPM Telltale Light. Driving the vehicle may cause the tire pressure to rise to approximately 27 psi (186 kPa), but the TPM Telltale Light will still be ON. In this situation, the TPM Telltale Light will turn OFF only after the tires are inflated to the vehicle's recommended cold placard pressure value.

CAUTION!

- **The TPMS has been optimized for the original equipment tires and wheels. TPMS pressures and warning have been established for the tire size equipped on your vehicle. Undesirable system operation or sensor damage may result when using replacement equipment that is not of the same size, type, and/or style. Aftermarket wheels can cause sensor damage. Do not use aftermarket tire sealants or balance beads if your vehicle is equipped with a TPMS, as damage to the sensors may result.**
- **After inspecting or adjusting the tire pressure, always reinstall the valve stem cap. This will prevent moisture and dirt from entering the valve stem, which could damage the TPM sensor.**

NOTE:

- The TPMS is not intended to replace normal tire care and maintenance or to provide warning of a tire failure or condition.
- The TPMS should not be used as a tire pressure gauge while adjusting your tire pressure.
- Driving on a significantly under-inflated tire causes the tire to overheat and can lead to tire failure. Under-inflation also reduces fuel efficiency and tire tread life, and may affect the vehicle's handling and stopping ability.
- The TPMS is not a substitute for proper tire maintenance, and it is the driver's responsibility to maintain correct tire pressure using an accurate tire pressure gauge, even if under-inflation has not reached the level to trigger illumination of the TPM Telltale Light.

- Seasonal temperature changes will affect tire pressure, and the TPMS will monitor the actual tire pressure in the tire.

Base System

The Tire Pressure Monitor System (TPMS) uses wireless technology with wheel rim mounted electronic sensors to monitor tire pressure levels. Sensors mounted to each wheel as part of the valve stem transmit tire pressure readings to the receiver module.

NOTE: It is particularly important for you to check the tire pressure in all of the tires on your vehicle monthly and to maintain the proper pressure.

The TPMS consists of the following components:

- Receiver module,
- Four TPM sensors, and
- TPM Telltale Light

The matching full size spare wheel and tire assembly (if equipped) has a TPM sensor. The matching full size spare can be used in place of any of the four road tires. The TPMS will only monitor the pressure in the full size spare when it is used in place of a road tire. Otherwise, a spare with a pressure below the low-pressure limit will not cause the TPM Telltale Light to illuminate or the chime to sound.

Tire Pressure Monitoring Low Pressure Warnings

The TPM Telltale Light will illuminate in the instrument cluster and a chime will sound when tire pressure is low in one or more of the four active road tires. Should this occur, you should stop as soon as possible, check the inflation pressure of each tire on your vehicle, and inflate each tire to the vehicle's recommended cold placard pressure value. Once the system receives the updated tire pressures, the system will automatically update and the TPM Telltale Light will

turn off. The vehicle may need to be driven for up to 20 minutes above 15 mph (24 km/h) in order for the TPMS to receive this information.

Check TPMS Warning

If a system fault is detected, the TPM Telltale Light will flash on and off for 75 seconds and then remain on solid. The system fault will also sound a chime. If the ignition switch is cycled, this sequence will repeat, providing the system fault still exists. The TPM Telltale Light will turn off when the fault condition no longer exists. A system fault can occur due to any of the following:

1. Signal interference due to electronic devices or driving next to facilities emitting the same radio frequencies as the TPM sensors.

2. Installing aftermarket window tinting that contains materials that may block radio wave signals.

3. Accumulation of snow or ice around the wheels or wheel housings.

4. Using tire chains on the vehicle.

5. Using wheels/tires not equipped with TPM sensors.

Vehicles With Full Size Spare

1. The matching full size spare wheel and tire assembly has a TPM sensor that can be monitored by the TPMS.

2. If you install the full size spare in place of a road tire that has a pressure below the low-pressure warning limit, upon the next ignition switch cycle, a chime will sound and the TPM Telltale Light will turn ON.

3. Driving the vehicle for up to 20 minutes above 15 mph (24 km/h) will turn off the TPM Telltale Light, as long as no tire pressure is below the low-pressure warning limit in any of the four active road tires.

Premium System – If Equipped

The Tire Pressure Monitor System (TPMS) uses wireless technology with wheel rim mounted electronic sensors to monitor tire pressure levels. Sensors mounted to each wheel as part of the valve stem transmit tire pressure readings to the receiver module.

NOTE: It is particularly important for you to check the tire pressure in all of the tires on your vehicle monthly and to maintain the proper pressure.

The TPMS consists of the following components:

- Receiver module,
- Four TPM sensors,
- Various TPMS messages, which display in the Electronic Vehicle Information Center (EVIC), and
- TPM Telltale Light

The matching full size spare wheel and tire assembly (if equipped) has a TPM sensor. The full size spare can be used in place of any of the four road tires. A spare with a pressure below the low-pressure limit will not cause the TPM Telltale Light to illuminate or the chime to sound.

Tire Pressure Monitoring Low Pressure Warnings

The TPM Telltale Light will illuminate in the instrument cluster and a chime will sound when tire pressure is low in one or more of the four active road tires. In addition, the EVIC will display one or more low pressure messages (Left Front, Left Rear, Right Front, Right Rear) for three seconds and a graphic showing the pressure values of each tire with the low tire pressure values flashing.

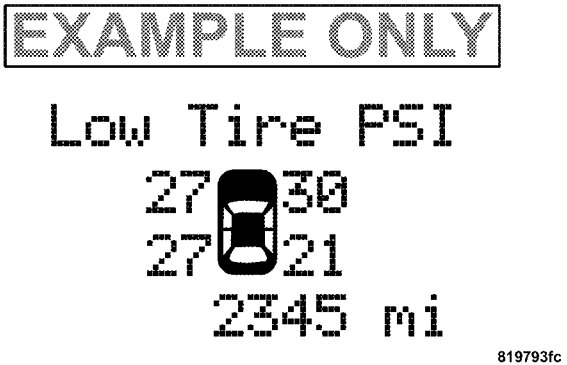

Should this occur, you should stop as soon as possible and inflate the tires with a low pressure condition (those flashing in the EVIC graphic) to the vehicle's recommended cold placard pressure inflation value. Once the system receives the updated tire pressures, the system will automatically update, the graphic display in the EVIC will stop flashing, and the TPM Telltale Light will

turn off. The vehicle may need to be driven for up to 20 minutes above 15 mph (24 km/h) in order for the TPMS to receive this information.

Check TPMS Warning

If a system fault is detected, the TPM Telltale Light will flash on and off for 75 seconds and then remain on solid. The system fault will also sound a chime. In addition, the EVIC will display a "CHECK TPM SYSTEM" message for three seconds and then display dashes (- -) in place of the pressure value to indicate which sensor is not being received.

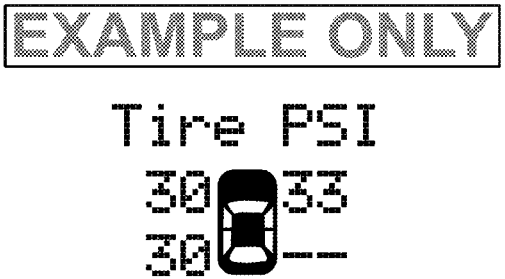

81979401

If the ignition switch is cycled, this sequence will repeat, providing the system fault still exists. If the system fault no longer exists, the TPM Telltale Light will no longer flash, and the "CHECK TPM SYSTEM" message will no longer display, and a pressure value will display in place of the dashes. A system fault can occur due to any of the following:

1. Signal interference due to electronic devices or driving next to facilities emitting the same radio frequencies as the TPM sensors.

2. Installing aftermarket window tinting that contains materials that may block radio wave signals.

3. Accumulation of snow or ice around the wheels or wheel housings.

4. Using tire chains on the vehicle.

5. Using wheels/tires not equipped with TPM sensors.

Vehicles With Full Size Spare

1. The matching full size spare wheel and tire assembly has a TPM sensor that can be monitored by the TPMS.

2. If you install the full size spare in place of a road tire that has a pressure below the low-pressure warning limit, upon the next ignition switch cycle, a chime will sound and the TPM Telltale Light will turn ON. In addition, the EVIC will display a low pressure message and a graphic showing the low tire pressure value flashing.

3. After driving the vehicle for up to 20 minutes above 15 mph (24 km/h) the TPM Telltale Light will turn OFF, as long as no tire pressure is below the low-pressure warning limit in any of the four active road tires.

Tire Pressure Monitor System (TPMS) Tire Light Load Inflation Switch Description (2500 Models) – If Equipped

WARNING!

Never operate your vehicle with the TPMS and tire pressures set to the Light Load Inflation Pressure settings if carrying more than two occupants (150 lbs [68 kg] each) plus 200 lbs (91 kg) of cargo. The vehicle "Light Load Definition" is found in the Supplemental Tire Pressure Information Label which is located on the rear face of the driver door opening. Failure to do so may cause you to lose control resulting in a collision, causing serious or fatal injury.

The TPMS tire light load inflation switch will allow the driver to switch between the max load inflation pressure (cold) low pressure warning threshold and the light load inflation pressure (cold) low pressure warning threshold depending on the vehicle's load condition. The Tire and Loading Information label defines the recommended front and rear cold tire inflation pressures for the vehicle when operating in the Max Load condition. A Supplemental Tire Pressure Information label is also available defining Light Load tire inflation pressures when operating in the Light Load condition. When the tire light

load inflation switch LED is ON, the TPMS is using the light load inflation pressure (cold) low inflation warning thresholds.

Tire Light Load Inflation Switch

Tire Light Load Inflation Switch Operation – If Equipped

- This vehicle may have different recommended tire pressure values between the front and rear tires as shown in both the Tire Loading Information Label and the Supplemental Tire Pressure Information Label. It is also equipped to be driven with tire pressures appropriate to either a Light Load condition or the vehicle Max Load condition.
- The tire light load inflation switch will allow the driver to change between the max load inflation pressure (cold) low pressure warning threshold and the light load inflation pressure (cold) low pressure warning threshold depending on the vehicle's load condition. Refer to the "Supplemental Tire Pressure Information" label for the vehicle's Light Load inflation pressures and "Tire and Loading Information" label for the vehicle's Max Load inflation pressures.

SUPPLEMENTAL TIRE PRESSURE INFORMATION

FOR LIGHT LOAD AND MAX LOAD CONDITIONS

LIGHT LOAD DEFINITION: 2 OCCUPANTS (150 LBS. EACH) PLUS 200 LBS. CARGO
MAX LOAD DEFINITION: AS DEFINED ON DRIVERS SIDE B - PILLAR PLACARD

	FRONT	REAR
LIGHT LOAD INFLATION PRESSURE (COLD)	345 kPa, 50 PSI	280 kPa, 40 PSI
MAX LOAD INFLATION PRESSURE (COLD)	410 kPa, 60 PSI	485 kPa, 70 PSI
TIRE SIZE	LT265/70T7E	LT265/70R17E

SEE OWNERS MANUAL FOR ADDITIONAL INFORMATION 60269494

81c57c10

Example Supplemental Tire Pressure Label

To switch from the max load inflation pressure (cold) low pressure warning threshold to the light load inflation pressure (cold) low pressure warning threshold, begin by placing the ignition switch in the RUN position. Next, lower all four road tire pressures to the Light Load Inflation Pressure values as listed on the Supplemental Tire Pressure Information label. The Supplemental Tire Pressure Information label is located on the rear face of the driver door opening. Use an accurate tire gauge to check the tire pressures when lowering all four tire pressures. The vehicle may need to be driven above 15 mph (24 km/h) to receive this updated pressure information. After all four tire pressures have been lowered to the Light Load inflation pressures, press the tire light load inflation switch. If the tire light load inflation switch's amber colored LED turns ON, the TPMS is using the light load inflation pressure (cold) low pressure warning thresholds.

If the tire light load inflation switch amber colored LED flashes on and off for 10 seconds, after all four tire pressures have been lowered to the Light Load inflation pressures, the pressure in any one of the four tires may not be at the light load inflation pressure (cold) values as indicated for the Light Load condition as defined on the Supplemental Tire Pressure Information label located on

the rear face of the driver door. Using an accurate tire pressure gauge, re-check the tire pressures for the light load inflation pressure (cold) value.

WARNING!

It is the driver's responsibility to change to the max load inflation pressure (cold) low pressure warning threshold condition when not driving in the light load condition as defined as two occupants (150 lbs [68 kg] each) plus 200 lbs (91 kg) of cargo. The vehicle "Light Load Definition" is found in the Supplemental Tire Pressure Information label located on the rear face of the driver door. Failure to do so may cause you to lose control resulting in a collision, causing serious or fatal injury.

To switch back to the max load inflation pressure (cold) low pressure warning threshold, press the tire light load inflation switch. It is not necessary to first fill the tires to the max load inflation pressure (cold) values to switch the TPMS system to the max load inflation pressure (cold) low pressure warning threshold. If after pressing the tire light load inflation switch, and tire pressures are below the max load inflation pressure (cold) low pressure warning thresholds, the TPMS low pressure warning telltale light (located in the instrument cluster) will turn ON and a chime will sound. The tire pressures are now required to be inflated to the max load inflation pressure (cold) values described on the Tire and Loading Information label. The Tire and Loading Information label is located on the drivers side B-pillar. If the tire light load inflation switch LED turns OFF, the TPMS has been reset and the TPMS is using the max load inflation pressure (cold) low pressure warning thresholds.

General Information

This device complies with Part 15 of the FCC rules and RSS 210 of Industry Canada. Operation is subject to the following conditions:

- This device may not cause harmful interference.
- This device must accept any interference received, including interference that may cause undesired operation.

The TPM sensors are regulated under one of the following licenses:

United States KR5S120123
Canada 2671-S120123

FUEL REQUIREMENTS

3.7L and 4.7L Engine

800dfab6

These engines are designed to meet all emissions regulations and provide excellent fuel economy and performance when using high quality unleaded "regular" gasoline having an octane rating of 87. The use of premium gasoline is not recommended, as it will not provide any benefit over regular gasoline in these engines.

5.7L Engine

800dfab7

This engine is designed to meet all emissions regulations and provide satisfactory fuel economy and performance when using high quality unleaded gasoline having an octane range of 87 to 89. The manufacturer recommends the use of 89 octane for optimum performance. The use of premium gasoline is not recommended, as it will not provide any benefit over regular gasoline in these engines.

Light spark knock at low engine speeds is not harmful to your engine. However, continued heavy spark knock at high speeds can cause damage and immediate service is required. Poor quality gasoline can cause problems such

as hard starting, stalling, and hesitations. If you experience these symptoms, try another brand of gasoline before considering service for the vehicle.

Over 40 auto manufacturers worldwide have issued and endorsed consistent gasoline specifications (the Worldwide Fuel Charter, WWFC) which define fuel properties necessary to deliver enhanced emissions, performance, and durability for your vehicle. The manufacturer recommends the use of gasoline that meets the WWFC specifications if they are available.

Reformulated Gasoline

Many areas of the country require the use of cleaner burning gasoline referred to as "Reformulated Gasoline." Reformulated gasolines contain oxygenates and are specifically blended to reduce vehicle emissions and improve air quality.

The manufacturer supports the use of reformulated gasolines. Properly blended reformulated gasolines will provide excellent performance and durability for the engine and fuel system components.

Gasoline/Oxygenate Blends

Some fuel suppliers blend unleaded gasoline with oxygenates such as Ethanol. Fuels blended with oxygenates may be used in your vehicle.

CAUTION!

DO NOT use gasoline containing Methanol or gasoline containing more than 10% Ethanol. Use of these blends may result in starting and driveability problems, damage critical fuel system components, cause emissions to exceed the applicable standard, and/or cause the "Malfunction Indicator Light" to illuminate. Pump labels should clearly communicate if a fuel contains greater than 10% Ethanol.

Problems that result from using gasoline containing Methanol or gasoline containing more than 10% Ethanol are not the responsibility of the manufacturer and may not be covered under warranty.

E-85 Usage In Non-Flex Fuel Vehicles

Non-FFV vehicles are compatible with gasoline containing 10% ethanol (E10). Gasoline with higher ethanol content may void the vehicle's warranty.

If a Non-FFV vehicle is inadvertently fueled with E-85 fuel, the engine will have some or all of these symptoms:

- operate in a lean mode
- OBD II "Malfunction Indicator Light" on
- poor engine performance
- poor cold start and cold drivability
- increased risk for fuel system component corrosion

To fix a Non-FFV vehicle inadvertently fueled once with E-85 perform the following:

- drain the fuel tank (see your authorized dealer)
- change the engine oil and oil filter
- disconnect and reconnect the battery to reset the engine controller memory

More extensive repairs will be required for prolonged exposure to E-85 fuel.

MMT In Gasoline

MMT is a manganese containing metallic additive that is blended into some gasoline to increase octane. Gasoline blended with MMT provides no performance advantage beyond gasoline of the same octane number without MMT. Gasoline blended with MMT reduces spark plug life and reduces emissions system performance in some vehicles. The manufacturer recommends that gasoline without MMT be used in your vehicle. The MMT content

of gasoline may not be indicated on the gasoline pump, therefore, you should ask your gasoline retailer whether or not his/her gasoline contains MMT. It is even more important to look for gasolines without MMT in Canada, because MMT can be used at levels higher than those allowed in the United States. MMT is prohibited in Federal and California reformulated gasoline.

Materials Added To Fuel

All gasoline sold in the United States is required to contain effective detergent additives. Use of additional detergents or other additives is not needed under normal conditions and would result in unnecessary cost. Therefore, you should not have to add anything to the fuel.

Fuel System Cautions

CAUTION!

Follow these guidelines to maintain your vehicle's performance:

- **The use of leaded gas is prohibited by Federal law. Using leaded gasoline can impair engine performance and damage the emission control system.**
- **An out-of-tune engine or certain fuel or ignition malfunctions can cause the catalytic converter to overheat. If you notice a pungent burning odor or some light smoke, your engine may be out of tune or malfunctioning and may require immediate service. Contact your authorized dealer for service assistance.**

(Continued)

CAUTION! (Continued)

- **The use of fuel additives, which are now being sold as octane enhancers are not recommended. Most of these products contain high concentrations of methanol. Fuel system damage or vehicle performance problems resulting from the use of such fuels or additives is not the responsibility of the manufacturer.**

NOTE: Intentional tampering with emissions control systems can result in civil penalties being assessed against you.

Carbon Monoxide Warnings

WARNING!

Carbon monoxide (CO) in exhaust gases is deadly. Follow the precautions below to prevent carbon monoxide poisoning:

- **Do not inhale exhaust gases. They contain carbon monoxide, a colorless and odorless gas which can kill. Never run the engine in a closed area such as a garage, and never sit in a parked vehicle with the engine running for an extended period. If the vehicle is stopped in an open area with the engine running for more than a short period, adjust the ventilation system to force fresh, outside air into the vehicle.**

(Continued)

WARNING! (Continued)

- **Guard against carbon monoxide with proper maintenance. Have the exhaust system inspected every time the vehicle is raised. Have any abnormal conditions repaired promptly. Until repaired, drive with all side windows fully open.**

FLEXIBLE FUEL (4.7L ENGINE ONLY) — IF EQUIPPED

E-85 General Information

The information in this section is for Flexible Fuel vehicles only. These vehicles can be identified by a unique fuel filler door label that states **Ethanol (E-85) or Unleaded Gasoline Only.** This section only covers those subjects that are unique to these vehicles. Please refer to the other sections of this manual for information on features that are common between Flexible Fuel and gasoline-only powered vehicles.

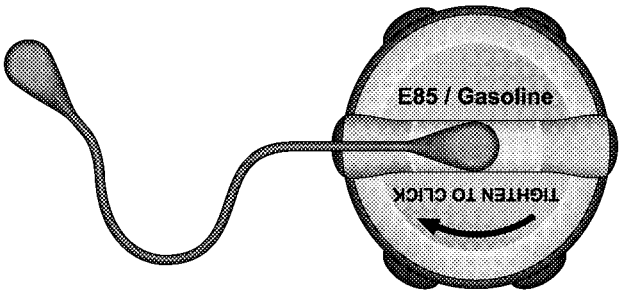

81ae46ab

E-85 Fuel Cap

CAUTION!

Only vehicles with the E-85 fuel filler door label can operate on E-85.

81ae46a9

E-85 Badge

Ethanol Fuel (E-85)

E-85 is a mixture of approximately 85% fuel ethanol and 15% unleaded gasoline.

WARNING!

Ethanol vapors are extremely flammable and could cause serious personal injury. Never have any smoking materials lit in or near the vehicle when removing the fuel filler tube cap (gas cap) or filling the tank. Do not use E-85 as a cleaning agent and never use it near an open flame.

Fuel Requirements

Your vehicle will operate on both unleaded gasoline with an octane rating of 87, or E-85 fuel, or any mixture of these two. For best results, a refueling pattern that alternates between E-85 and unleaded gasoline should be avoided.

When you do switch fuel types it is recommended that:

- you do not switch when the fuel gauge indicates less than 1/4 full

- you do not add less than 5 gallons (19 Liters) when refueling
- you operate the vehicle immediately after refueling for a period of at least 5 minutes

Observing these precautions will avoid possible hard starting and/or significant deterioration in driveability during warm up.

NOTE:

- When the ambient temperature is above 90° F (32° C), you may experience hard starting and rough idle following start up even if the above recommendations are followed.
- Some additives used in regular gasoline are not fully compatible with E-85 and may form deposits in your engine. To eliminate driveability issues that may be caused by these deposits, a supplemental gasoline additive, such as MOPAR® Injector Cleanup or Techron may be used.

Selection Of Engine Oil For Flexible Fuel Vehicles (E-85) And Gasoline Vehicles

FFV vehicles operated on E-85 require specially formulated engine oils. These special requirements are included in MOPAR® engine oils, and in equivalent oils meeting Chrysler Specification MS-6395. The manufacturer requires engine oils that are API Certified and meet the requirements of Material Standard MS-6395. MS-6395 contains additional requirements, developed during extensive fleet testing, to provide additional protection to Chrysler Group LLC engines. Use MOPAR® or an equivalent oil meeting the specification MS-6395.

Starting

The characteristics of E-85 fuel make it unsuitable for use when ambient temperatures fall below 0°F (-18°C). In the range of 0°F (-18°C) to 32°F (0°C), you may experience an increase in the time it takes for your engine to start, and a deterioration in driveability (sags and/or hesitations) until the engine is fully warmed up.

NOTE: Use of the engine block heater (if equipped) is beneficial for E-85 startability when the ambient temperature is less than 32°F (0°C).

Cruising Range

Because E-85 fuel contains less energy per gallon/liter than gasoline, you will experience an increase in fuel consumption. You can expect your miles per gallon (mpg)/miles per liter and your driving range to decrease by about 30%, compared to gasoline operation.

Replacement Parts

Many components in your Flexible Fuel Vehicle (FFV) are designed to be compatible with ethanol. Always be sure that your vehicle is serviced with correct ethanol compatible parts.

CAUTION!

Replacing fuel system components with non-ethanol compatible components can damage your vehicle.

Maintenance

CAUTION!

Do not use ethanol mixture greater than 85% in your vehicle. It will cause difficulty in cold starting and may affect driveability.

ADDING FUEL

The fuel filler cap (gas cap) is located behind the fuel filler door, on the left side of the vehicle. Open the fuel door and remove the fuel cap by turning it counter-clockwise.

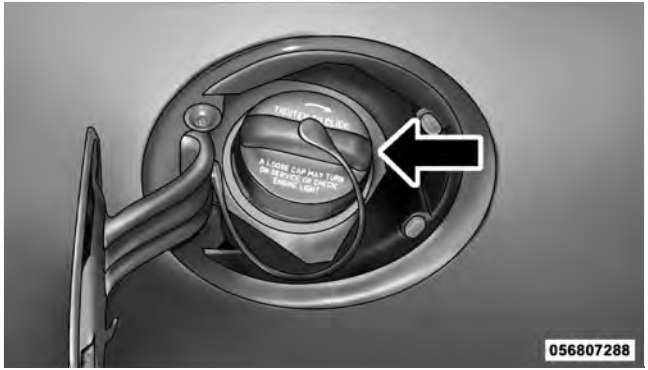

Fuel Filler Cap

NOTE: When removing the fuel filler cap, lay the cap tether in the hook, located on the fuel filler door.

CAUTION!

- **Damage to the fuel system or emissions control system could result from using an improper fuel tank filler tube cap (gas cap).**
- **A poorly fitting gas cap could let impurities into the fuel system.**
- **A poorly fitting gas cap may cause the "Malfunction Indicator Light (MIL)" to turn on.**
- **To avoid fuel spillage and overfilling, do not "top off" the fuel tank after filling. When the fuel nozzle "clicks" or shuts off, the fuel tank is full.**

WARNING!

- **Never have any smoking materials lit in or near the vehicle when the gas cap is removed or the tank is being filled.**
- **Never add fuel to the vehicle when the engine is running.**
- **A fire may result if gasoline is pumped into a portable container that is inside of a vehicle. You could be burned. Always place gas containers on the ground while filling.**

NOTE:

- Tighten the gas cap until you hear a "clicking" sound. This is an indication that the gas cap is tightened properly. The MIL in the instrument cluster may turn on if the gas cap is not secured properly. Make sure that the gas cap is tightened each time the vehicle is refueled.
- When the fuel nozzle "clicks" or shuts off, the fuel tank is full.

Loose Fuel Filler Cap Message

If the vehicle diagnostic system determines that the fuel filler cap is loose, improperly installed, or damaged, a loose gascap indicator will display in the EVIC telltale display area. Refer to "Electronic Vehicle Information Center (EVIC) in "Understanding Your Instrument Panel" for further information. Tighten the fuel filler cap properly and press the SELECT button to turn off the message. If the problem continues, the message will appear the next time the vehicle is started.

VEHICLE LOADING

Certification Label

As required by National Highway Traffic Safety Administration regulations, your vehicle has a certification label affixed to the driver's side door or pillar.

This label contains the month and year of manufacture, Gross Vehicle Weight Rating (GVWR), Gross Axle Weight Rating (GAWR) front and rear, and Vehicle Identification Number (VIN). A Month-Day-Hour (MDH) number is included on this label and indicates the Month, Day and Hour of manufacture. The bar code that appears on the bottom of the label is your VIN.

Gross Vehicle Weight Rating (GVWR)
The GVWR is the total permissible weight of your vehicle including driver, passengers, vehicle, options and cargo. The label also specifies maximum capacities of front and rear axle systems (GAWR). Total load must be limited so GVWR and front and rear GAWR are not exceeded.

Payload
The payload of a vehicle is defined as the allowable load weight a truck can carry, including the weight of the driver, all passengers, options and cargo.

Gross Axle Weight Rating (GAWR)
The GAWR is the maximum permissible load on the front and rear axles. The load must be distributed in the cargo area so that the GAWR of each axle is not exceeded.

Each axle GAWR is determined by the components in the system with the lowest load carrying capacity (axle, springs, tires or wheels). Heavier axles or suspension components sometimes specified by purchasers for increased durability does not necessarily increase the vehicle's GVWR.

Tire Size
The tire size on the label represents the actual tire size on your vehicle. Replacement tires must be equal to the load capacity of this tire size.

Rim Size
This is the rim size that is appropriate for the tire size listed.

Inflation Pressure
This is the cold tire inflation pressure for your vehicle for all loading conditions up to full GAWR.

Curb Weight
The curb weight of a vehicle is defined as the total weight of the vehicle with all fluids, including vehicle fuel, at full capacity conditions, and with no occupants or cargo loaded into the vehicle. The front and rear curb weight values are determined by weighing your vehicle on a commercial scale before any occupants or cargo are added.

Loading
The actual total weight and the weight of the front and rear of your vehicle at the ground can best be determined by weighing it when it is loaded and ready for operation. The entire vehicle should first be weighed on a commercial scale to insure that the GVWR has not been exceeded. The weight on the front and rear of the vehicle should then be determined separately to be sure that the load is properly distributed over the front and rear axle. Weighing the vehicle may show that the GAWR of either the front or rear axles has been exceeded but the total load is within the specified GVWR. If so, weight must be shifted from front to rear or rear to front as appropriate until the specified weight limitations are met. Store the heavier items down low and be sure that the weight is distributed equally. Stow all loose items securely before driving.

Improper weight distributions can have an adverse effect on the way your vehicle steers and handles and the way the brakes operate.

CAUTION!

Do not load your vehicle any heavier than the GVWR or the maximum front and rear GAWR. If you do, parts on your vehicle can break, or it can change the way your vehicle handles. This could cause you to lose control. Also overloading can shorten the life of your vehicle.

TRAILER TOWING

In this section you will find safety tips and information on limits to the type of towing you can reasonably do with your vehicle. Before towing a trailer, carefully review this information to tow your load as efficiently and safely as possible.

To maintain warranty coverage, follow the requirements and recommendations in this manual concerning vehicles used for trailer towing.

Common Towing Definitions

The following trailer towing related definitions will assist you in understanding the following information:

Gross Vehicle Weight Rating (GVWR)

The GVWR is the total allowable weight of your vehicle. This includes driver, passengers, cargo and tongue weight. The total load must be limited so that you do not exceed the GVWR. Refer to "Vehicle Loading/Vehicle Certification Label" in "Starting and Operating" for further information.

Gross Trailer Weight (GTW)

The GTW is the weight of the trailer plus the weight of all cargo, consumables and equipment (permanent or temporary) loaded in or on the trailer in its "loaded and ready for operation" condition.

The recommended way to measure GTW is to put your fully loaded trailer on a vehicle scale. The entire weight of the trailer must be supported by the scale.

Gross Combination Weight Rating (GCWR)
The GCWR is the total permissible weight of your vehicle and trailer when weighed in combination.

NOTE: The GCWR rating includes a 150 lbs (68 kg) allowance for the presence of a driver.

Gross Axle Weight Rating (GAWR)
The GAWR is the maximum capacity of the front and rear axles. Distribute the load over the front and rear axles evenly. Make sure that you do not exceed either front or rear GAWR. Refer to "Vehicle Loading/Vehicle Certification Label" in "Starting and Operating" for further information.

WARNING!

It is important that you do not exceed the maximum front or rear GAWR. A dangerous driving condition can result if either rating is exceeded. You could lose control of the vehicle and have a collision.

Tongue Weight (TW)
The tongue weight is the downward force exerted on the hitch ball by the trailer. In most cases it should not be less than 10% or more than 15% of the trailer load. You must consider this as part of the load on your vehicle.

Frontal Area
The frontal area is the maximum height multiplied by the maximum width of the front of a trailer.

Trailer Sway Control
The trailer sway control is a telescoping link that can be installed between the hitch receiver and the trailer tongue

that typically provides adjustable friction associated with the telescoping motion to dampen any unwanted trailer swaying motions while traveling.

Weight-Carrying Hitch

A weight-carrying hitch supports the trailer tongue weight, just as if it were luggage located at a hitch ball or some other connecting point of the truck. These kind of hitches are the most popular on the market today and they are commonly used to tow small- and medium-sized trailers.

Weight-Distributing Hitch

A weight-distributing system works by applying leverage through spring (load) bars. They are typically used for heavier loads to distribute trailer tongue weight to the tow vehicle's front axle and the trailer axle(s). When used in accordance with the manufacturer's directions, it provides for a more level ride, offering more consistent steering and brake control, thereby enhancing towing safety. The addition of a friction/hydraulic sway control also dampens sway caused by traffic and crosswinds and contributes positively to tow vehicle and trailer stability. Trailer sway control and a weight distributing (load equalizing) hitch are recommended for heavier Tongue Weights (TW) and may be required depending on vehicle and trailer configuration/loading to comply with GAWR requirements.

WARNING!

- **An improperly adjusted weight distributing hitch system may reduce handling, stability and braking performance and could result in a collision.**
- **Weight distributing systems may not be compatible with surge brake couplers. Consult with your hitch and trailer manufacturer or a reputable Recreational Vehicle dealer for additional information.**

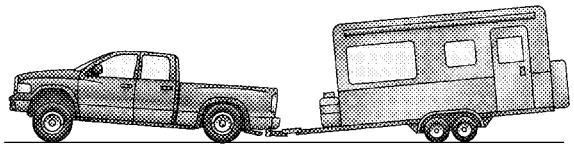

057003770

EXAMPLE — Without Weight-Distributing Hitch (Incorrect)

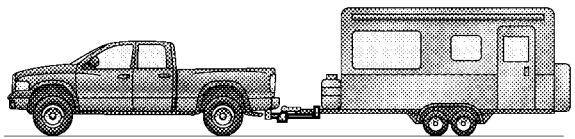

057003769

EXAMPLE — With Weight-Distributing Hitch (Correct)

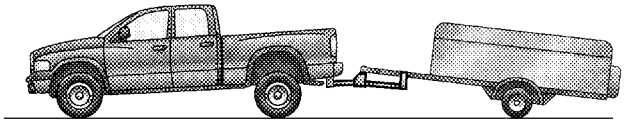

057003768

EXAMPLE — Improper Adjustment of Weight-Distributing Hitch (Incorrect)

Fifth-Wheel Hitch

The fifth-wheel hitch is a special high platform with a coupling that mounts over the rear axle of the tow vehicle in the truck bed. It connects a vehicle and fifth-wheel trailer with a coupling king pin.

Gooseneck Hitch

The gooseneck hitch employs a pivoted coupling arm which attaches to a ball mounted in the bed of a pickup truck. The coupling arm connects to the hitch mounted over the rear axle in the truck bed.

Trailer Hitch Classification

The rear bumper is intended to tow trailers up to 5,000 lbs (2 268 kg) without added equipment or alterations to the standard equipment. Your vehicle may be factory equipped for safe towing of trailers weighing over 5,000 lbs (2 268 kg) with the optional Trailer Tow Prep Package. See your dealer for package content.

The following chart provides the industry standard for the maximum trailer weight a given trailer hitch class can tow and should be used to assist you in selecting the correct trailer hitch for your intended towing condition. Refer to “Trailer Towing Weights (Maximum Trailer

Weight Ratings)" for the website address that contains the necessary information for your specific drivetrain.

Trailer Hitch Classification Definitions	
Class	**Max. Trailer Hitch Industry Standards**
Class I - Light Duty	2,000 lbs (907 kg)
Class II - Medium Duty	3,500 lbs (1587 kg)
Class III - Heavy Duty	5,000 lbs (2268 kg)
Class IV - Extra Heavy Duty	10,000 lbs (4540 kg)
Fifth Wheel/ Gooseneck	Greater than 10,000 lbs (4540 kg)
Refer to the "Trailer Towing Weights (Maximum Trailer Weight Ratings)" for the Maximum Gross Trailer Weight (GTW) towable for your given drivetrain.	

All trailer hitches should be professionally installed on your vehicle.

Trailer Towing Weights (Maximum Trailer Weight Ratings)

NOTE: For additional trailer towing information including maximum trailer and tongue weight rating for your vehicle, refer to the following website addresses:

- **http:// www.ramtrucks.com**.
- **http:// www.dodge.ca** (Canada).

Trailer And Tongue Weight

Always load a trailer with 60% to 65% of the weight in the front of the trailer. This places 10% to 15% of the GTW on the tow hitch of your vehicle. Loads balanced over the wheels or heavier in the rear can cause the trailer to sway **severely** side to side which will cause loss of control of the vehicle and trailer. Failure to load trailers heavier in front is the cause of many trailer collisions.

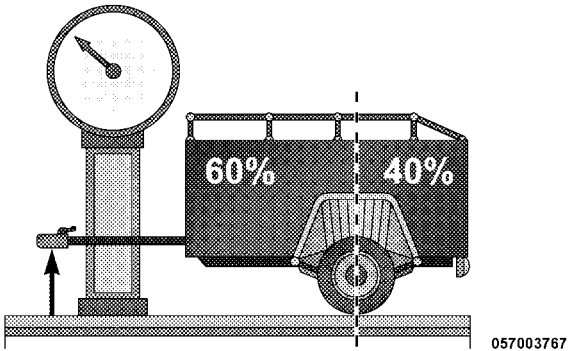

Consider the following items when computing the weight on the rear axle of the vehicle:

- The tongue weight of the trailer
- The weight of any other type of cargo or equipment put in or on your vehicle
- The weight of the driver and all passengers.

NOTE: Remember that everything put into or on the trailer adds to the load on your vehicle. Also, additional factory-installed options or dealer-installed options must be considered as part of the total load on your vehicle. Refer to "Tire Safety Information/Tire and Loading Information Placard" in "Starting and Operating" for further information.

Towing Requirements

To promote proper break-in of your new vehicle drivetrain components the following guidelines are recommended:

CAUTION!

- **Do not tow a trailer at all during the first 500 miles (805 km) the new vehicle is driven. The engine, axle or other parts could be damaged.**
- **Then, during the first 500 miles (805 km) that a trailer is towed, do not drive over 50 mph (80 km/h) and do not make starts at full throttle. This helps the engine and other parts of the vehicle wear in at the heavier loads.**

WARNING!

Improper towing can lead to a collision. Follow these guidelines to make your trailer towing as safe as possible:

- **Make certain that the load is secured in the trailer and will not shift during travel. When trailering cargo that is not fully secured, dynamic load shifts can occur that may be difficult for the driver to control. You could lose control of your vehicle and have a collision.**
- **When hauling cargo or towing a trailer, do not overload your vehicle or trailer. Overloading can cause a loss of control, poor performance or damage to brakes, axle, engine, transmission, steering, suspension, chassis structure or tires.**

(Continued)

WARNING! (Continued)

- **Safety chains must always be used between your vehicle and trailer. Always connect the chains to the hook retainers of the vehicle hitch. Cross the chains under the trailer tongue and allow enough slack for turning corners.**
- **Vehicles with trailers should not be parked on a grade. When parking, apply the parking brake on the tow vehicle. Put the tow vehicle transmission in PARK. For four-wheel drive vehicles, make sure the transfer case is not in NEUTRAL. Always, block or "chock" the trailer wheels.**
- **GCWR must not be exceeded.**
- **Total weight must be distributed between the tow vehicle and the trailer such that the following four ratings are not exceeded:**
  1. GVWR

(Continued)

WARNING! (Continued)

2. GTW

3. GAWR

4. Trailer tongue weight rating for the trailer hitch utilized (This requirement may limit the ability to always achieve the 10% to 15% range of tongue weight as a percentage of total trailer weight).

Towing Requirements – Tires

- Do not attempt to tow a trailer while using a compact spare tire.
- Proper tire inflation pressures are essential to the safe and satisfactory operation of your vehicle. Refer to "Tires – General Information" in "Starting and Operating" for proper tire inflation procedures.
- Check the trailer tires for proper tire inflation pressures before trailer usage.
- Check for signs of tire wear or visible tire damage before towing a trailer. Refer to "Tires – General Information" in "Starting and Operating" for the proper inspection procedure.
- When replacing tires, refer to "Tires – General Information" in "Starting and Operating" for proper tire replacement procedures. Replacing tires with a higher load carrying capacity will not increase the vehicle's GVWR and GAWR limits.

Towing Requirements – Trailer Brakes

- Do **not** interconnect the hydraulic brake system or vacuum system of your vehicle with that of the trailer. This could cause inadequate braking and possible personal injury.
- An electronically actuated trailer brake controller is required when towing a trailer with electronically

actuated brakes. When towing a trailer equipped with a hydraulic surge actuated brake system, an electronic brake controller is not required.

- Trailer brakes are recommended for trailers over 1,000 lbs (454 kg) and required for trailers in excess of 2,000 lbs (907 kg).

CAUTION!

If the trailer weighs more than 1,000 lbs (454 kg) loaded, it should have its own brakes and they should be of adequate capacity. Failure to do this could lead to accelerated brake lining wear, higher brake pedal effort, and longer stopping distances.

WARNING!

- **Do not connect trailer brakes to your vehicle's hydraulic brake lines. It can overload your brake system and cause it to fail. You might not have brakes when you need them and could have a collision.**
- **Towing any trailer will increase your stopping distance. When towing you should allow for additional space between your vehicle and the vehicle in front of you. Failure to do so could result in a collision.**

Integrated Trailer Brake Module – If Equipped

Your vehicle may have a Integrated Trailer Brake Module for electric trailer brakes.

NOTE: This module has been designed and verified for electric trailer brakes. To determine the type of brakes on your trailer, check with your trailer manufacturer or dealer.

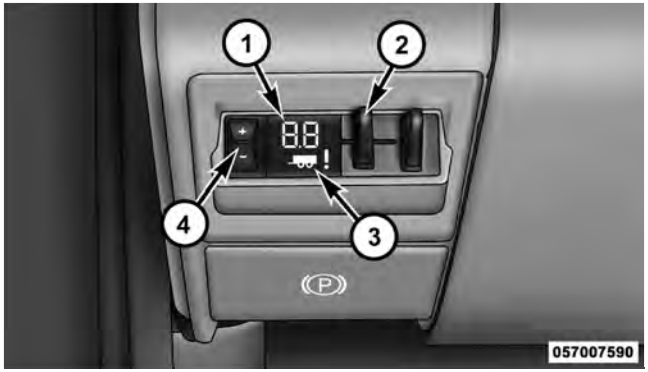

1 — GAIN/Brake Output Power Display
2 — Manual Brake Control Lever
3 — Trailer Brake Status Indicator Light
4 — GAIN Adjustment Buttons

The user interface consists of the following:

GAIN/ Brake Output Power Display
Shows the current GAIN setting.

This display may also be used to display diagnostic information, if needed.

- SC — Short Circuit to Ground
- Sb — Short to Battery
- CF — Controller Fault – If this message appears on the display, see your authorized dealer.

When the vehicle brakes are applied, the display will no longer show GAIN and will change to the output to the trailer brakes.

Manual Brake Control Lever
Slide the manual brake control lever to the right to activate power to the trailer's electric brakes independent of the tow vehicle's brakes. If the manual brake control

lever is activated while the brake is also applied, the greater of the two inputs determines the power sent to the trailer brakes.

The trailer and the vehicle's brake lamps will come on when either vehicle braking or manual trailer brakes are applied.

Trailer Brake Status Indicator Light
This light indicates the trailer electrical connection status.

If no electrical connection is detected after the ignition is turned on, pressing the GAIN adjustment button or sliding the manual brake control lever will display the GAIN setting for 10 seconds and the "Trailer Brake Status Indicator Light" will not be displayed.

If a fault is detected in the trailer wiring or the Integrated Trailer Brake Module (ITBM), the "Trailer Brake Status Indicator Light" will flash.

GAIN Adjustment Buttons (+/-)
Pressing these buttons will adjust the brake control power output to the trailer brakes in 0.5 increments. The GAIN setting can be increased to a maximum of 10 or decreased to a minimum of 0 (no trailer braking).

GAIN
The GAIN setting is used to set the trailer brake control for the specific towing condition and should be changed as towing conditions change. Changes to towing conditions include trailer load, vehicle load, road conditions and weather.

Adjusting GAIN

NOTE: This should only be performed in a traffic free environment at speeds of approximately 20–25 mph (30–40 km/h).

1. Make sure the trailer brakes are in good working condition, functioning normally, and properly adjusted. See your trailer dealer if necessary.

2. Hook up the trailer and make the electrical connections according to the trailer manufacturer's instructions.

3. When a trailer with electric brakes is plugged in, the GAIN setting will illuminate.

4. Use the GAIN adjustment (+/-) buttons to increase or decrease the GAIN setting to the desired starting point. A GAIN setting of 6 is a good starting point for heavier loads.

5. In a traffic-free environment, tow the trailer on a dry, level surface at a speed of 20–25 mph (30–40 km/h) and squeeze the manual brake control lever completely.

6. If the trailer wheels lockup (indicated by squealing tires), reduce the GAIN setting; if the trailer wheels turn freely, increase the GAIN setting.

Repeat Steps 5 and 6 until the GAIN setting is at a point just below trailer wheel lockup. If towing a heavier trailer, trailer wheel lockup may not be attainable even with the maximum GAIN setting of 10.

EVIC Display Messages

The trailer brake control interacts with the Electronic Vehicle Information Center (EVIC). Display messages, along with a single chime, will be displayed when a malfunction is determined in the trailer connection, trailer brake control, or on the trailer. Refer to "Electronic Vehicle Information Center" in "Understanding Your Instrument Panel" for further information.

CAUTION!

The ITBM module has been designed and verified for electric trailer brakes. Connecting a trailer that is not compatible with the ITBM system may result in reduced or complete loss of trailer braking. There may be a increase in stopping distance or trailer instability which could result in damage to your vehicle, trailer, or other property.

WARNING!

The ITBM module has been designed and verified for electric trailer brakes. Connecting a trailer that is not compatible with the ITBM system may result in reduced or complete loss of trailer braking. There may be a increase in stopping distance or trailer instability which could result in personal injury.

NOTE:

- An aftermarket controller may be available for use with trailers with air or electric-over-hydraulic trailer brake systems. To determine the type of brakes on your trailer and the availability of controllers, check with your trailer manufacturer or dealer.
- Removal of the ITBM will cause errors and it may cause damage to the electrical system and electronic modules of the vehicle. See your authorized dealer if an aftermarket module is to be installed.

Towing Requirements – Trailer Lights And Wiring

Whenever you pull a trailer, regardless of the trailer size, stop lights and turn signals on the trailer are required for motoring safety.

The Trailer Tow Package will include a four and seven-pin wiring harness. Use a factory approved trailer harness and connector.

NOTE: Do not cut or splice wiring into the vehicle's wiring harness.

The electrical connections are all complete to the vehicle but you must mate the harness to a trailer connector. Refer to the following illustrations.

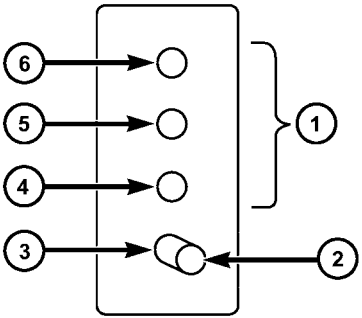

Four-Pin Connector

1 — Female Pins	4 — Park
2 — Male Pin	5 — Left Stop/Turn
3 — Ground	6 — Right Stop/Turn

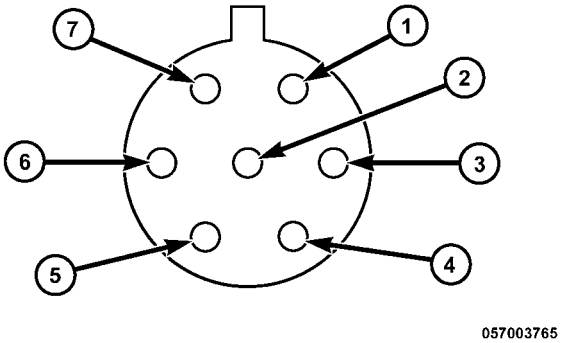

Seven-Pin Connector

1 — Battery	5 — Ground
2 — Backup Lamps	6 — Left Stop/Turn
3 — Right Stop/Turn	7 — Running Lamps
4 — Electric Brakes	

WARNING!

Any work done to the vehicle's electrical system or wiring should be performed by a qualified automotive technician. If done improperly it may cause damage to the electrical system wiring and could result in serious or fatal injury.

Towing Tips

Before setting out on a trip, practice turning, stopping and backing the trailer up in an area away from heavy traffic.

Automatic Transmission

The "DRIVE" range can be selected when towing. However, if frequent shifting occurs while in this range, select "TOW/HAUL" mode (if equipped) or select a lower gear using the Electronic Range Select (ERS) feature.

NOTE: Using "TOW/HAUL" mode or a lower gear range while operating the vehicle under heavy operating conditions will improve performance and extend transmission life by reducing excessive shifting and heat build up. This action will also provide better engine braking.

The automatic transmission fluid and filter should be changed if you regularly tow a trailer for more than 45 minutes of continuous operation. Refer to "Maintenance Schedule" for the proper maintenance intervals.

NOTE: Check the automatic transmission fluid level before towing.

Tow/Haul

To reduce potential for automatic transmission overheating, turn the "TOW/HAUL" feature ON when driving in hilly areas, or select a lower gear range (using the Electronic Range Select (ERS) feature) on more severe grades.

Electronic Speed Control – If Equipped

– Do not use in hilly terrain or with heavy loads.

– When using the speed control, if you experience speed drops greater than 10 mph (16 km/h), disengage until you can get back to cruising speed.

– Use speed control in flat terrain and with light loads to maximize fuel efficiency.

Cooling System

To reduce potential for engine and transmission overheating, take the following actions:

– *City Driving*

When stopped for short periods of time, shift the transmission into NEUTRAL and increase engine idle speed.

– *Highway Driving*

Reduce speed.

– *Air Conditioning*
Turn off temporarily.

SNOWPLOW

1500 Models Only

NOTE: Do not use this model vehicle for snowplow applications.

WARNING!

Snowplows and other aftermarket equipment should not be added to the front end of your vehicle. The airbag crash sensors may be affected by the change in the front end structure. The airbags could deploy unexpectedly or could fail to deploy during a collision resulting in serious injury or death.

CAUTION!

Using this vehicle for snowplow applications can cause damage to the vehicle.

WARNING!

Attaching a snowplow to this vehicle could adversely affect performance of the airbag system in a collision. Do not expect that the airbag will perform as described earlier in this manual

2500/3500 Models Only

Snowplow Prep Packages are available as a factory installed option. These packages include components necessary to equip your vehicle with a snowplow.

NOTE: Before installation of a snowplow it is highly recommended that the owner/installer obtain and follow the recommendations contained within the current Body

Builders Guide. See your authorized dealer, installer or snowplow manufacturer for this information. There are unique electrical systems that must be connected to properly assure operator safety and prevent overloading vehicle systems.

WARNING!

Attaching a snowplow to this vehicle could adversely affect performance of the airbag system in a collision. Do not expect that the airbag will perform as described earlier in this manual

CAUTION!

The "Lamp Out" indicator could illuminate if exterior lamps are not properly installed.

Before Plowing

- Check the hydraulic system for leaks and proper fluid level.
- Check the mounting bolts and nuts for proper tightness.
- Check the runners and cutting edge for excessive wear. The cutting edge should be 1/4 to 1/2 in (6 cm to 1.2 cm) above ground in snow plowing position.
- Check that snowplow lighting is connected and functioning properly.

Snowplow Prep Package Model Availability
For Information about snowplow applications visit www.ramtrucks.com or refer to the current Body Builders Guide.

1. The maximum number of occupants in the truck should not exceed two.

2. The total GVWR or the Front GAWR or the Rear GAWR should never be exceeded.

3. Cargo capacity will be reduced by the addition of options or passengers, etc.

The loaded vehicle weight, including the snowplow system, all aftermarket accessories, driver, passengers, options, and cargo, must not exceed either the Gross Vehicle Weight (GVWR) or Gross Axle Weight (GAWR) ratings. These weights are specified on the Safety Compliance Certification Label on the driver's side door opening.

NOTE: Detach the snowplow when transporting passengers.

Vehicle front end wheel alignment was set to specifications at the factory without consideration for the weight of the plow. Front end toe-in should be checked and reset if necessary at the beginning and end of the snowplow season. This will help prevent uneven tire wear.

The blade should be lowered whenever the vehicle is parked.

Maintain and operate your vehicle and snowplow equipment following the recommendations provided by the specific snowplow manufacturer.

Over The Road Operation With Snowplow Attached

The blade restricts air flow to the radiator and causes the engine to operate at higher than normal temperatures. Therefore, when transporting the plow, angle the blade completely and position it as low as road or surface conditions permit. Do not exceed 40 mph (64 km/h). The operator should always maintain a safe stopping distance and allow adequate passing clearance.

Operating Tips

Under ideal snow plowing conditions, 20 mph (32 km/h) should be maximum operating speed. The operator should be familiar with the area and surface to be cleaned. Reduce speed and use extreme caution when plowing unfamiliar areas or under poor visibility.

NOTE: During snowplow usage on vehicles equipped with outside temperature display, the display may show higher temperatures than the outside ambient temperature. The higher displayed temperature is due to blocked or reduced airflow to the underhood ambient temperature sensor caused by the snowplow. In addition, on vehicles equipped with Automatic Temperature Control (ATC), it is suggested that the interior cabin temperature be manually controlled should the system not perform as desired while in automatic mode. Both the outside temperature display and ATC operation will return to normal when the snowplow is removed.

General Maintenance

Snowplows should be maintained in accordance with the plow manufacturer's instructions.

Keep all snowplow electrical connections and battery terminals clean and free of corrosion.

When plowing snow, to avoid transmission and drivetrain damage, the following precautions should be observed.

- Operate with transfer case in 4L when plowing small or congested areas where speeds are not likely to exceed 15 mph (24 km/h). At higher speeds operate in 4H.
- Vehicles with automatic transmissions should use 4L range when plowing deep or heavy snow for extended periods of time to avoid transmission overheating.
- Do not shift the transmission unless the engine has returned to idle and wheels have stopped. Make a practice of stepping on the brake pedal before shifting the transmission.

RECREATIONAL TOWING (BEHIND MOTORHOME, ETC.)

Towing This Vehicle Behind Another Vehicle

Towing Condition	Wheels OFF The Ground	Two-Wheel Drive Models	Four-Wheel Drive Models
Flat Tow	NONE	**NOT ALLOWED**	*See Instructions* • Automatic transmission in PARK • Manual transmission in gear (NOT in NEUTRAL (N) • Transfer case in NEUTRAL (N) • Tow in forward direction
Dolly Tow	Front	**NOT ALLOWED**	**NOT ALLOWED**
	Rear	OK	**NOT ALLOWED**
On Trailer	ALL	OK	OK

Recreational Towing – Two-Wheel Drive Models

DO NOT flat tow this vehicle. Damage to the drivetrain will result.

Recreational towing (for two-wheel drive models) is allowed ONLY if the rear wheels are OFF the ground. This may be accomplished using a tow dolly or vehicle trailer. If using a tow dolly, follow this procedure:

1. Properly secure the dolly to the tow vehicle, following the dolly manufacturer's instructions.

2. Drive the rear wheels onto the tow dolly.

3. Firmly set the parking brake. Place automatic transmission in PARK, manual transmission in gear (not in Neutral).

4. Properly secure the rear wheels to the dolly, following the dolly manufacturer's instructions.

5. Remove the key fob from the ignition switch.

6. Install a suitable clamping device, designed for towing, to secure the front wheels in the straight position.

CAUTION!

- **Towing with the rear wheels on the ground will cause severe transmission damage. Damage from improper towing is not covered under the New Vehicle Limited Warranty.**
- **Do not disconnect the driveshaft because fluid will leak from the transmission, causing damage to internal parts.**

Recreational Towing – Four-Wheel Drive Models

NOTE: Both the manual shift and electronic shift transfer cases must be shifted into NEUTRAL for recreational towing. Automatic transmissions must be shifted into PARK for recreational towing. Manual transmissions

must be placed in gear (NOT in NEUTRAL) for recreational towing. Refer to the following for the proper transfer case NEUTRAL shifting procedure for your vehicle.

CAUTION!

- **Front or rear wheel lifts should not be used. Internal damage to the transmission or transfer case will occur if a front or rear wheel lift is used when recreational towing.**
- **Tow only in the forward direction. Towing this vehicle backwards can cause severe damage to the transfer case.**
- **Automatic transmissions must be placed in the PARK position for recreational towing.**
- **Manual transmissions must be placed in gear (not in Neutral) for recreational towing.**

(Continued)

CAUTION! (Continued)

- **Before recreational towing, perform the procedure outlined under "Shifting Into NEUTRAL" to be certain that the transfer case is fully in NEUTRAL. Otherwise, internal damage will result.**
- **Towing this vehicle in violation of the above requirements can cause severe transmission and/or transfer case damage. Damage from improper towing is not covered under the New Vehicle Limited Warranty.**
- **Do not disconnect the rear driveshaft because fluid will leak from the transfer case, causing damage to internal parts.**
- **Do not use a bumper-mounted clamp-on tow bar on your vehicle. The bumper face bar will be damaged.**

Shifting Into Neutral (N) – Manual Shift Transfer Case (If Equipped)

Use the following procedure to prepare your vehicle for recreational towing.

WARNING!

You or others could be injured if you leave the vehicle unattended with the transfer case in the Neutral (N) position without first fully engaging the parking brake. The transfer case Neutral (N) position disengages both the front and rear driveshafts from the powertrain and will allow the vehicle to move, even if the transmission is in PARK. The parking brake should always be applied when the driver is not in the vehicle.

CAUTION!

It is necessary to follow these steps to be certain that the transfer case is fully in Neutral (N) before recreational towing to prevent damage to internal parts.

1. Bring the vehicle to a complete stop.
2. Turn OFF the engine.
3. Press and hold the brake pedal.
4. Shift the automatic transmission into NEUTRAL or depress the clutch pedal on a manual transmission.
5. Shift the transfer case lever into Neutral (N).
6. Start the engine.
7. Shift the transmission into REVERSE.

8. Release the brake pedal (and clutch pedal on manual transmissions) for five seconds and ensure that there is no vehicle movement.

9. Repeat steps 7 and 8 with automatic transmission in DRIVE or manual transmission in first gear.

10. Turn OFF the engine.

11. Firmly apply the parking brake.

12. Shift the transmission into PARK or place manual transmission in gear (not in Neutral).

CAUTION!

Damage to the transmission may occur if the transmission is shifted into PARK with the transfer case in Neutral (N) and the engine running. With the transfer case in Neutral (N) ensure that the engine is OFF prior to shifting the transmission into PARK.

13. Remove the key fob from the ignition switch.

14. Attach the vehicle to the tow vehicle using a suitable tow bar.

15. Release the parking brake.

Shifting Out Of Neutral (N) – Manual Shift Transfer Case (If Equipped)

Use the following procedure to prepare your vehicle for normal usage.

1. Bring the vehicle to a complete stop, leaving it connected to the tow vehicle.

2. Firmly apply the parking brake.

3. Insert the key fob into the ignition switch and turn it to the ON/RUN position, but do not start the engine.

4. Press and hold the brake pedal.

5. Shift the transmission into NEUTRAL.

6. Shift the transfer case lever to the desired position.

NOTE: When shifting out of transfer case Neutral (N), turning the engine OFF may be required to avoid gear clash.

7. Shift the automatic transmission into PARK, or place manual transmission in Neutral.

8. Release the brake pedal.

9. Disconnect vehicle from the tow vehicle.

10. Start the engine.

11. Press and hold the brake pedal.

12. Release the parking brake.

13. Shift the transmission into gear, release the brake pedal (and clutch pedal on manual transmissions), and check that the vehicle operates normally.

Shifting Into Neutral – Electronic Shift Transfer Case (If Equipped)

Use the following procedure to prepare your vehicle for recreational towing:

WARNING!

You or others could be injured if you leave the vehicle unattended with the transfer case in the NEUTRAL position without first fully engaging the parking brake. The transfer case NEUTRAL position disengages both the front and rear driveshafts from the powertrain and will allow the vehicle to move, even if the transmission is in PARK. The parking brake should always be applied when the driver is not in the vehicle.

CAUTION!

It is necessary to follow these steps to be certain that the transfer case is fully in NEUTRAL before recreational towing to prevent damage to internal parts.

1. Bring the vehicle to a complete stop. Shift automatic transmission into PARK.

2. Turn OFF the engine.

3. Turn the ignition switch to the ON/RUN position, but do not start the engine.

4. Press and hold the brake pedal.

5. Shift the automatic transmission into NEUTRAL or press the clutch pedal on a manual transmission.

6. Press and hold the transfer case NEUTRAL button (located by the selector switch). The NEUTRAL indicator light will blink while the shift is in progress. The light will stop blinking (stay on solid) when the shift to NEUTRAL is complete.

7. After the shift is completed and the NEUTRAL light stays on, release the NEUTRAL button.

8. Start the engine.

9. Shift the transmission into REVERSE.

10. Release the brake pedal (and clutch pedal on manual transmissions) for five seconds and ensure that there is no vehicle movement.

11. Repeat steps 9 and 10 with automatic transmission in DRIVE or manual transmission in first gear.

12. Turn OFF the engine.

13. Firmly apply the parking brake.

14. Shift the transmission into PARK or place manual transmission in gear (not in Neutral).

CAUTION!

Damage to the transmission may occur if the transmission is shifted into PARK with the transfer case in NEUTRAL and the engine running. With the transfer case in NEUTRAL, ensure that the engine is OFF prior to shifting the transmission into PARK.

15. Remove the key fob from the ignition switch.

16. Attach the vehicle to the tow vehicle using a suitable tow bar.

17. Release the parking brake.

NOTE:

- The transfer case cannot be shifted into NEUTRAL from the 4WD AUTO (if equipped) position.
- Steps 1 through 5 are requirements that must be met prior to pressing the NEUTRAL button, and must continue to be met until the shift has been completed. If any of these requirements are not met prior to pressing the NEUTRAL button or are no longer met during the shift, the NEUTRAL indicator light will flash continuously until all requirements are met or until the NEUTRAL button is released.
- The ignition switch must be in the ON/RUN position for a shift to take place and for the position indicator lights to be operable. If the ignition switch is not in the ON/RUN position, the shift will not take place and no position indicator lights will be on or flashing.
- A flashing NEUTRAL indicator light indicates that shift requirements have not been met.

Shifting Out Of Neutral – Electronic Shift Transfer Case (If Equipped)

Use the following procedure to prepare your vehicle for normal usage:

1. Bring the vehicle to a complete stop, leaving it connected to the tow vehicle.

2. Firmly apply the parking brake.

3. Insert the key fob into the ignition switch and turn it to the ON/RUN position, but do not start the engine.

4. Press and hold the brake pedal.

5. Shift the transmission into NEUTRAL.

6. Press and hold the transfer case NEUTRAL button (located by the selector switch) until the NEUTRAL indicator light turns off.

7. After the NEUTRAL indicator light turns off, release the NEUTRAL button.

8. After the NEUTRAL button has been released, the transfer case will shift to the position identified by the selector switch.

NOTE: When shifting out of transfer case NEUTRAL, turning the engine OFF may be required to avoid gear clash.

9. Shift the automatic transmission into PARK, or place manual transmission in Neutral.

10. Release the brake pedal.

11. Disconnect vehicle from the tow vehicle.

12. Start the engine.

13. Press and hold the brake pedal.

14. Release the parking brake.

15. Shift the transmission into gear, release the brake pedal (and clutch pedal on manual transmissions), and check that the vehicle operates normally.

NOTE:

- Steps 1 through 5 are requirements that must be met prior to pressing the transfer case NEUTRAL button and must continue to be met until the shift has been completed. If any of these requirements are not met prior to pressing the NEUTRAL button, or are no longer met during the shift, the NEUTRAL indicator light will flash continuously until all requirements are met or until the NEUTRAL button is released.
- The ignition switch must be in the ON/RUN position for a transfer case shift to take place and for the position indicator lights to be operable. If the ignition switch is not in the ON/RUN position, the shift will not take place and no position indicator lights will be on or flashing.
- A flashing NEUTRAL position indicator light indicates that shift requirements have not been met.

WHAT TO DO IN EMERGENCIES

CONTENTS

- Hazard Warning Flashers 491
- Jacking And Tire Changing 491
  - Jack Location 492
  - Removing The Spare Tire 497
  - Preparations 498
  - Instructions 499
  - Hub Caps/Wheel Covers — If Equipped . . . 505
  - Wheel Nuts 506
  - To Stow The Flat Or Spare 509
- Hoisting 510
- Jump-Starting Procedures 510
  - Preparations For Jump-Start 510
  - Jump-Starting Procedure 512
- Freeing A Stuck Vehicle 514
- Emergency Tow Hooks — If Equipped 515
- Shift Lever Override 516
  - Column Shifter — If Equipped 516
  - Center Console Shifter — If Equipped 517

■ Towing A Disabled Vehicle 518
□ Towing Without The Ignition Key FOB 519
□ Two-Wheel Drive Models 520
□ Four-Wheel Drive Vehicles 520

HAZARD WARNING FLASHERS

The Hazard Warning flasher switch is located on the upper switch bank just below the radio.

Press the switch to turn on the Hazard Warning flasher. When the switch is activated, all directional turn signals will flash on and off to warn oncoming traffic of an emergency. Press the switch a second time to turn off the Hazard Warning flashers.

This is an emergency warning system and it should not be used when the vehicle is in motion. Use it when your vehicle is disabled and it is creating a safety hazard for other motorists.

When you must leave the vehicle to seek assistance, the Hazard Warning flashers will continue to operate even though the ignition is placed in the OFF position.

NOTE: With extended use the Hazard Warning flashers may wear down your battery.

JACKING AND TIRE CHANGING

WARNING!

- **Do not attempt to change a tire on the side of the vehicle close to moving traffic. Pull far enough off the road to avoid the danger of being hit when operating the jack or changing the wheel.**
- **Being under a jacked-up vehicle is dangerous. The vehicle could slip off the jack and fall on you. You could be crushed. Never put any part of your body under a vehicle that is on a jack.**
- **Never start or run the engine while the vehicle is on a jack. If you need to get under a raised vehicle, take it to a service center where it can be raised on a lift.**

(Continued)

WARNING! (Continued)

- **The jack is designed to be used as a tool for changing tires only. The jack should not be used to lift the vehicle for service purposes. The vehicle should be jacked on a firm level surface only. Avoid ice or slippery areas.**

Jack Location

The jack and jack tools are stored under the front passenger seat.

Removal

To access the jack and jack tools you must remove the plastic access cover, located on the side of the seat. To remove the cover, pull the front part of the cover (closest to the front of the seat) toward you to release a locking tab. Once the front of the cover is loose, slide the cover toward the front of the seat until it is free from the seat frame.

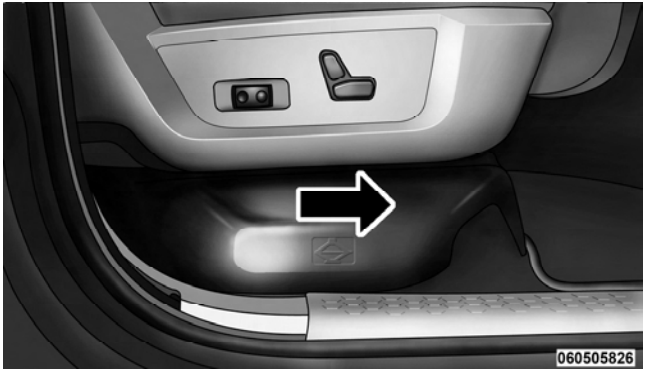

Jack Access Cover

Remove the jack and tools by removing the wing bolt and sliding the assembly from under the seat.

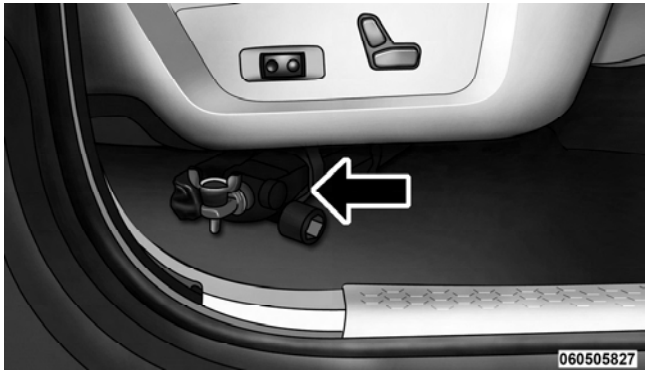

Jack And Tools (1500 Series)

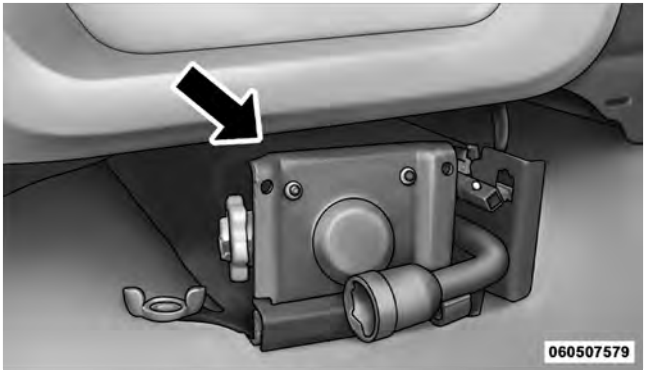

Jack And Tools (2500/3500 Series)

WARNING!

After using the jack and tools, always reinstall them in the original carrier and location. While driving you may experience abrupt stopping, rapid acceleration or sharp turns. A loose jack, tools, bracket or other objects in the vehicle may move around with force, resulting in serious injury.

Reinstalling The Jack And Tools (1500 Series)

1. Lower the jack all the way down by turning the jack turn-screw until the jack is snug.

2. Position the jack and tool bag (unrolled). Make sure the lug wrench is under the jack near the jack turn-screw.

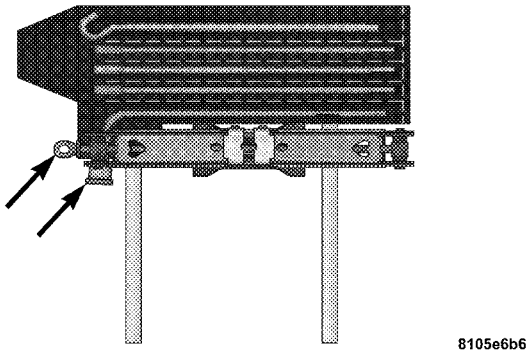

Turn Screw And Lug

3. Fold the flap and roll the jack tool kit into a cylindrical package (in direction of arrows) and tie to the jack using the tie straps.

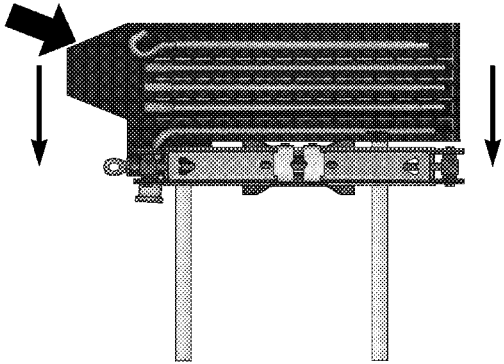

Folding Flap And Rolling Bag

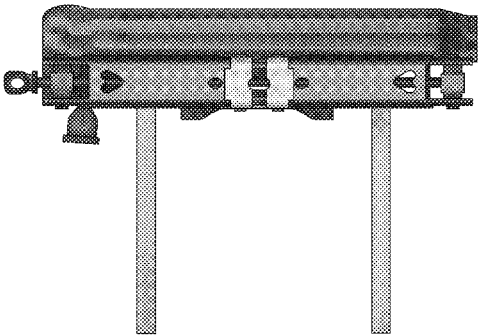

Tying Bag To Jack With Straps

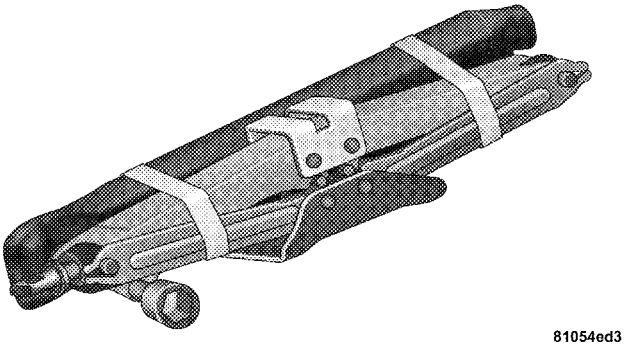

Jack And Tools Tied

Jack And Tools (1500 Series)

4. Place the jack and tools in the storage position holding the jack by the jack turn-screw, slip the jack and tools under the seat so that the bottom slot engages into the fastener on the floor, and then secure to the floor pan using the wing bolt. Reinstall the plastic cover.

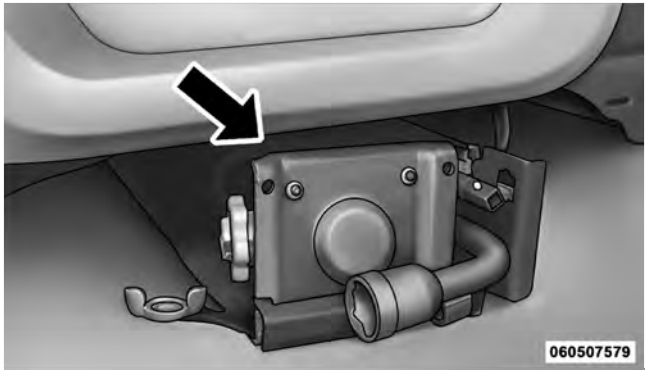

Jack And Tools (2500/3500 Series)

Removing The Spare Tire

Remove the spare tire before attempting to jack up the truck. Attach the wheel wrench to the jack extension tube. Insert the tube through the access hole between the lower tailgate and the top of the bumper and into the winch mechanism tube. Rotate the wheel wrench handle counterclockwise until the spare tire is on the ground with enough cable slack to allow you to pull it out from under the vehicle. When the spare is clear, tilt the retainer at the end of the cable and pull it through the center of the wheel.

NOTE: Always stow the spare tire with the valve stem facing the ground.

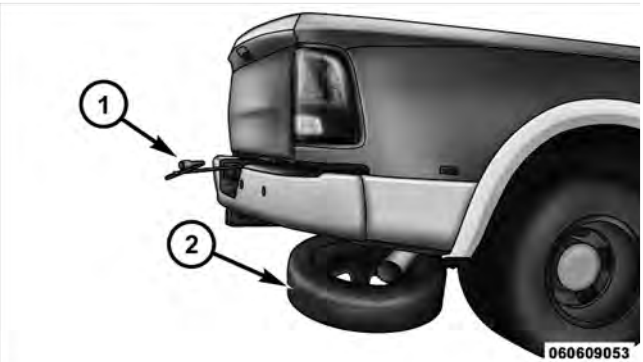

Removing The Spare Tire

1 — Wheel Wrench
2 — Spare Tire

It is recommended that you stow the flat or spare to avoid tangling the loose cable.

NOTE: The winch mechanism is designed for use with the jack extension tube only. Use of an air wrench or other power tools is not recommended and can damage the winch.

Preparations

1. Park the vehicle on a firm, level surface. Avoid ice or slippery areas.

WARNING!

Do not attempt to change a tire on the side of the vehicle close to moving traffic, pull far enough off the road to avoid the danger of being hit when operating the jack or changing the wheel.

2. Turn on the Hazard Warning flasher.

3. Set the parking brake.

4. Place the shift lever into PARK. On four-wheel drive vehicles, shift the transfer case to the 4L position.

5. Turn the ignition OFF.

6. Block both the front and rear of the wheel diagonally opposite the jacking position. For example, if the right front wheel is being changed, block the left rear wheel.

NOTE: Passengers should not remain in the vehicle when the vehicle is being jacked.

Instructions

WARNING!

Carefully follow these tire changing warnings to help prevent personal injury or damage to your vehicle:

- **Always park on a firm, level surface as far from the edge of the roadway as possible before raising the vehicle.**
- **Turn on the Hazard Warning flasher.**
- **Block the wheel diagonally opposite the wheel to be raised.**
- **Set the parking brake firmly and set an automatic transmission in PARK; a manual transmission in REVERSE.**
- **Never start or run the engine with the vehicle on a jack.**

(Continued)

WARNING! (Continued)

- **Do not let anyone sit in the vehicle when it is on a jack.**
- **Do not get under the vehicle when it is on a jack.**
- **Only use the jack in the positions indicated and for lifting this vehicle during a tire change.**
- **If working on or near a roadway, be extremely careful of motor traffic.**
- **To assure that spare tires, flat or inflated, are securely stowed, spares must be stowed with the valve stem facing the ground.**

Jack Warning Label

CAUTION!

Do not attempt to raise the vehicle by jacking on locations other than those indicated in the Jacking Instructions for this vehicle.

1. Remove the spare wheel, jack, and tools from storage.

2. Using the wheel wrench, loosen, but do not remove, the wheel nuts by turning them counterclockwise one turn while the wheel is still on the ground.

3. Placement of the jack:

- ***1500 Series Trucks***

When changing a front wheel, place the scissors jack under the rear portion of the lower control arm as shown below.

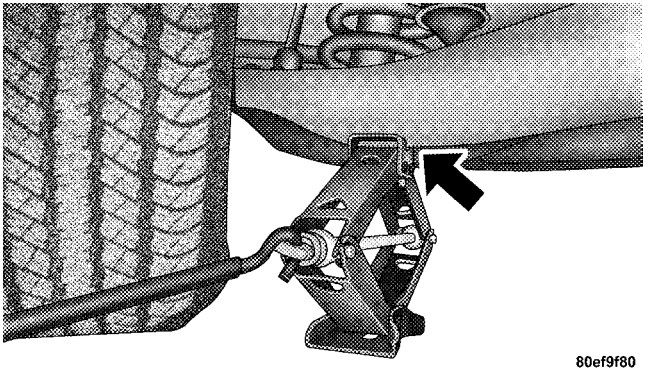

4X2 Jacking Location

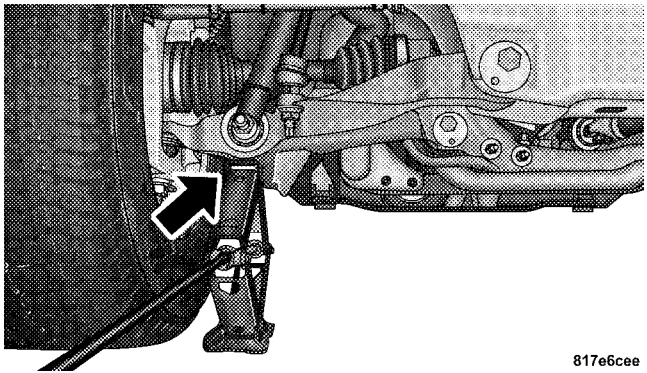

4X4 Jacking Location

Operate the jack using the jack drive tube and the wheel wrench. The tube extension may be used but is not required.

For 4x2 and 4x4 trucks, when changing a rear wheel, assemble the jack drive tube to the jack and connect the drive tube to the extension tube. Place the jack under the axle between the wheel and the shock bracket with the drive tubes extending to the rear.

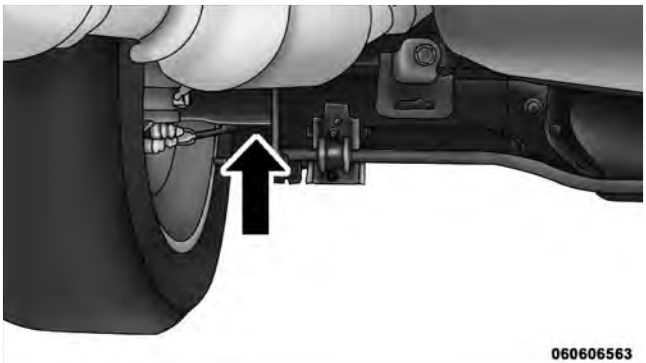

Rear Jacking Location

Connect the jack tube extension and wheel wrench.

CAUTION!

Before raising the wheel off the ground, make sure that the jack will not damage surrounding truck parts and adjust the jack position as required.

- ***2500/3500 Series Trucks***

For 2500/3500 4x2 series trucks, when changing a front wheel, place the bottle jack under the frame rail behind the wheel. Locate the jack as far forward as possible on the straight part of the frame.

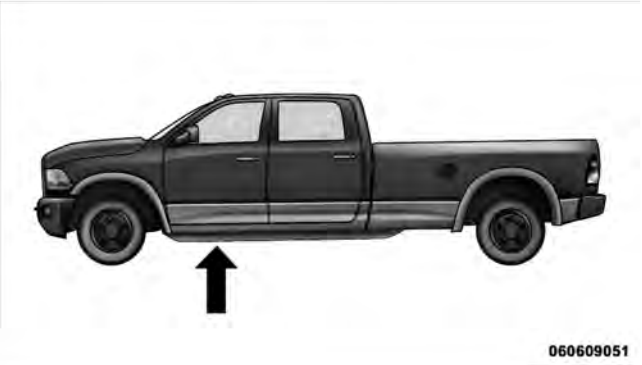

4x2 Jacking Location

Operate the jack using the jack drive tube and the wheel wrench. The tube extension, may be used, but is not required.

For 2500/3500 4x4 series trucks, when changing the front wheel, assemble the jack drive tube to the jack and connect the drive tube to the extension tube. Place the

jack under the axle as close to the tire as possible with the drive tubes extending to the front. Connect the jack tube extension and wheel wrench.

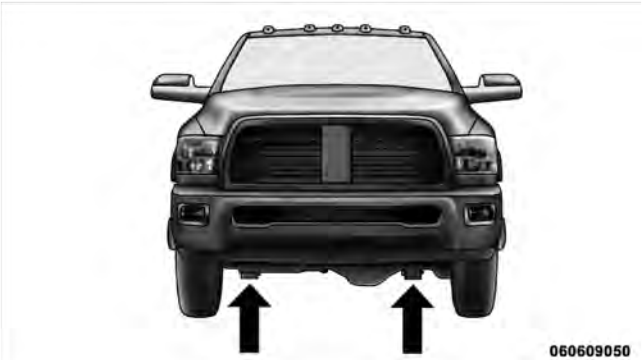

4x4 Jacking Location

For 4x2 and 4x4 trucks, when changing a rear wheel, assemble the jack drive tube to the jack and connect the drive tube to the extension tube. Place the jack under the axle between the spring and the shock absorber with the drive tubes extending to the rear.

Rear Jacking Location (All)

Connect the jack tube extension and wheel wrench.

CAUTION!

Before raising the wheel off the ground, make sure that the jack will not damage surrounding truck parts and adjust the jack position as required.

NOTE: If the bottle jack will not lower by turning the dial (thumbwheel) by hand, it may be necessary to use the jack drive tube in order to lower the jack.

4. By rotating the wheel wrench clockwise, raise the vehicle until the wheel just clears the surface.

WARNING!

Raising the vehicle higher than necessary can make the vehicle unstable and cause a collision. It could slip off the jack and hurt someone near it. Raise the vehicle only enough to remove the tire.

5. Remove the wheel nuts and pull the wheel off. On single rear-wheel (SRW) trucks, install the spare wheel and wheel nuts with the cone shaped end of the wheel nuts toward the wheel. On 3500 dual rear-wheel models (DRW) the wheel nuts are a two-piece assembly with a flat face. Lightly tighten the wheel nuts. To avoid the risk of forcing the vehicle off the jack, do not fully tighten the wheel nuts until the vehicle has been lowered.

6. Using the wheel wrench, finish tightening the wheel nuts using a crisscross pattern. The correct wheel nut tightness is 130 ft lbs (177 N·m) torque (1500 Series), 135 ft lbs (183 N·m) torque for 2500/3500 single-rear wheel (SRW) models, and 145 ft lbs (197 N·m) for 3500 dual rear-wheel models. If in doubt about the correct tightness, have them checked with a torque wrench by your authorized dealer or at a service station.

WARNING!

A loose tire or jack thrown forward in a collision or hard stop could injure someone in the vehicle. Always stow the jack parts and the extra tire and wheel in the places provided.

7. Install the wheel center cap and remove the wheel blocks. Do not install chrome or aluminum wheel center caps on the spare wheel. This may result in cap damage.

8. Lower the jack to its fully closed position. If the bottle jack will not lower by turning the dial (thumbwheel) by hand, it may be necessary to use the jack drive tube in order to lower the jack. Stow the replaced tire, jack, and tools as previously described.

9. Adjust the tire pressure when possible.

NOTE: Do not oil wheel studs. For chrome wheels, do not substitute with chrome plated wheel nuts.

Hub Caps/Wheel Covers — If Equipped

The hub caps must be removed before raising the vehicle off the ground.

For 2500/3500 single rear-wheel (SRW) models, use the blade on the end of the lug wrench to pry the hub cap off. Insert the blade end into the pry-off notch and carefully pop off the hub cap with a back-and-forth motion.

On 3500 models with dual rear wheels (DRW), you must first remove the hub caps. The jack handle driver has a hook at one end that will fit in the pry off notch of the rear hub caps. Position the hook and pull out on the ratchet firmly. The hub cap should pop off. The wheel skins can now be removed. For the front hub cap on 3500 models use the blade on the end of the lug wrench to pry the caps off. The wheel skin can now be removed.

CAUTION!

- **Use a back-and-forth motion to remove the hub cap. Do not use a twisting motion when removing the hub cap, damage to the hub cap finish may occur.**
- **The rear hub caps on the dual rear wheel has two pry-off notches. Make sure that the hook of the jack handle driver is located squarely in the cap notch before attempting to pull off.**

You must use the flat end of the lug wrench to pry off the wheel skins. Insert the flat tip completely and using a back-and-forth motion, loosen the wheel skin. Repeat this procedure around the tire until the skin pops off.

Replace the wheel skins first using a rubber mallet. When replacing the hub caps, tilt the cap retainer over the lug nut bolt circle and strike the high side down with a rubber mallet. Be sure that the hub caps and wheel skins are firmly seated around the wheel.

Wheel Nuts

All wheel nuts should be tightened occasionally to eliminate the possibility of wheel studs being sheared or the bolt holes in the wheels becoming elongated. This is especially important during the first few hundred miles/kilometers of operation to allow the wheel nuts to become properly set. All wheel nuts should first be firmly seated against the wheel. The wheel nuts should then be tightened to recommended torque. Tighten the wheel nuts to final torque in increments. Progress around the bolt circle, tightening the wheel nut opposite to the wheel nut just previously tightened until final torque is achieved. Recommended torques are shown in the following chart.

Disc Wheels	Type Nut	Stud Size	Torque Ft. Lbs.	Torque Newton Meters
	Cone	9/16-18	120-150	160-200
	Flanged	9/16-18	130-160	190-220

8-Stud — Dual Rear Wheels

Dual wheels are flat-mounted and center-piloted. The lug nuts are a two-piece assembly. When the tires are being rotated or replaced, clean these lug nuts and add two drops of oil at the interface between the hex and the washer.

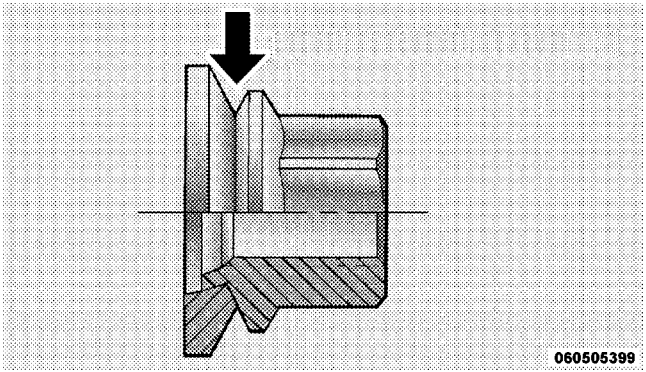

Oiling Location

Slots in the wheels will assist in properly orienting the inner and outer wheels. Align these slots when assembling the wheels for best access to the tire valve on the inner wheel. The tires of both dual wheels must be completely off the ground when tightening, to ensure wheel centering and maximum wheel clamping.

Dual wheel models require a special heavy-duty lug nut tightening adapter (included with the vehicle) to correctly tighten the lug nuts. Also, when it is necessary to remove and install dual rear wheels, use a proper vehicle lifting device.

NOTE: When installing a spare tire as part of a dual rear wheel end combination, the tire diameter of the two individual tires must be compared. If there is a significant difference, the larger tire should be installed in a front location. The correct direction of rotation for dual tire installations must also be observed.

These dual rear wheels should be tightened as follows:

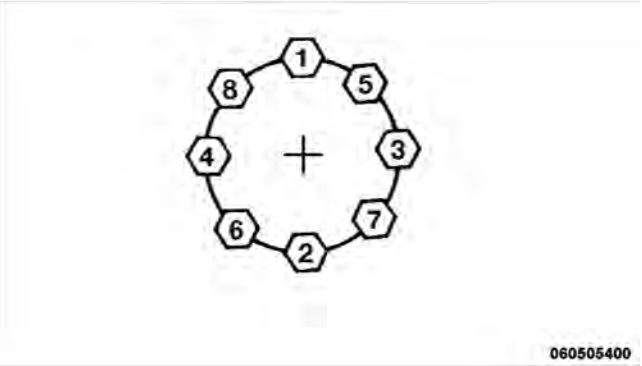

Tightening Pattern

1. Tighten the wheel nuts in the numbered sequence to a snug fit.

2. Retighten the wheel nuts in the same sequence to the torques listed in the table. Go through the sequence a

second time to verify that specific torque has been achieved. Retighten to specifications at 100 miles (160 km) and after 500 miles (800 km).

It is recommended that wheel stud nuts be kept torqued to specifications at all times. Torque wheel stud nuts to specifications at each lubrication interval.

To Stow The Flat Or Spare

NOTE: Vehicles equipped with aluminum wheels cannot be stored under the vehicle because the wheel retainer will not fit through the wheel pilot hole. Secure the flat tire in the bed of the truck. **Have the flat tire repaired or replaced immediately.**

WARNING!

A loose tire thrown forward in a collision or hard stop could injure the occupants in the vehicle. Have the deflated (flat) tire repaired or replaced immediately.

Turn the wheel so that the valve stem is down. Slide the wheel retainer through the center of the wheel and position it properly across the wheel opening.

For convenience in checking the spare tire inflation, stow with the valve stem toward the rear of the vehicle.

Attach the wheel wrench to the extension tube. Rotate the winch mechanism until the wheel is drawn into place against the underside of the vehicle. Continue to rotate until you feel the winch mechanism slip, or click three or four times. It cannot be overtightened. Push against the tire several times to be sure it is firmly in place.

HOISTING

A conventional floor jack may be used at the jacking locations. Refer to the graphics that show jacking locations. However, a floor jack or frame hoist must never be used on any other parts of the underbody.

CAUTION!

Never use a floor jack directly under the differential housing of a loaded truck or damage to your vehicle may result.

JUMP-STARTING PROCEDURES

If your vehicle has a discharged battery it can be jump-started using a set of jumper cables and a battery in another vehicle or by using a portable battery booster pack. Jump-starting can be dangerous if done improperly so please follow the procedures in this section carefully.

NOTE: When using a portable battery booster pack follow the manufacturer's operating instructions and precautions.

CAUTION!

Do not use a portable battery booster pack or any other booster source with a system voltage greater than 12 Volts or damage to the battery, starter motor, alternator or electrical system may occur.

WARNING!

Do not attempt jump-starting if the battery is frozen. It could rupture or explode and cause personal injury.

Preparations For Jump-Start

The battery in your vehicle is located in the front of the engine compartment, behind the left headlight assembly.

NOTE: The positive battery post is covered with a protective cap. Lift up on the cap to gain access to the positive battery post.

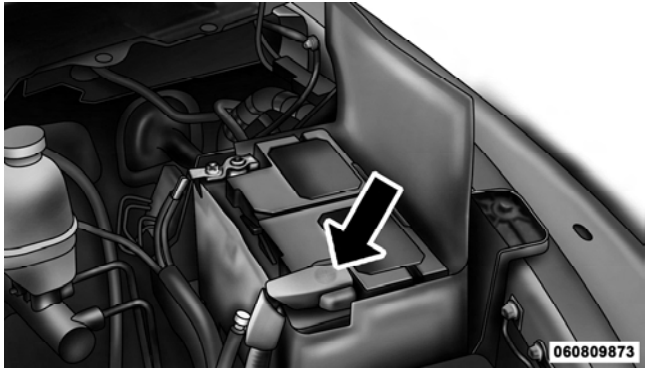

Positive Battery Post

WARNING!

- **Take care to avoid the radiator cooling fan whenever the hood is raised. It can start anytime the ignition switch is on. You can be injured by moving fan blades.**
- **Remove any metal jewelry such as watch bands or bracelets that might make an inadvertent electrical contact. You could be seriously injured.**
- **Batteries contain sulfuric acid that can burn your skin or eyes and generate hydrogen gas which is flammable and explosive. Keep open flames or sparks away from the battery.**

1. Set the parking brake, shift the automatic transmission into PARK and turn the ignition to LOCK.

2. Turn off the heater, radio, and all unnecessary electrical accessories.

3. If using another vehicle to jump-start the battery, park the vehicle within the jumper cables reach, set the parking brake and make sure the ignition is OFF.

WARNING!

Do not allow vehicles to touch each other as this could establish a ground connection and personal injury could result.

Jump-Starting Procedure

WARNING!

Failure to follow this procedure could result in personal injury or property damage due to battery explosion.

CAUTION!

Failure to follow these procedures could result in damage to the charging system of the booster vehicle or the discharged vehicle.

1. Connect the positive **(+)** end of the jumper cable to the positive **(+)** post of the discharged vehicle.

2. Connect the opposite end of the positive **(+)** jumper cable to the positive **(+)** post of the booster battery.

3. Connect the negative end **(-)** of the jumper cable to the negative **(-)** post of the booster battery.

4. Connect the opposite end of the negative **(-)** jumper cable to a good engine ground (exposed metal part of the discharged vehicle's engine) away from the battery and the fuel injection system.

WARNING!

Do not connect the cable to the negative post (-) of the discharged battery. The resulting electrical spark could cause the battery to explode and could result in personal injury.

5. Start the engine in the vehicle that has the booster battery, let the engine idle a few minutes, and then start the engine in the vehicle with the discharged battery.

Once the engine is started, remove the jumper cables in the reverse sequence:

6. Disconnect the negative **(-)** jumper cable from the engine ground of the vehicle with the discharged battery.

7. Disconnect the negative end **(-)** of the jumper cable from the negative **(-)** post of the booster battery.

8. Disconnect the opposite end of the positive **(+)** jumper cable from the positive **(+)** post of the booster battery.

9. Disconnect the positive **(+)** end of the jumper cable from the positive **(+)** post of the discharged vehicle.

If frequent jump-starting is required to start your vehicle you should have the battery and charging system inspected at your authorized dealer.

CAUTION!

Accessories that can be plugged into the vehicle power outlets draw power from the vehicle's battery, even when not in use (i.e., cellular phones, etc.). Eventually, if plugged in long enough, the vehicle's battery will discharge sufficiently to degrade battery life and/or prevent the engine from starting.

FREEING A STUCK VEHICLE

If the vehicle becomes stuck in snow, sand or mud, it can often be moved by a rocking motion. Move the shift lever rhythmically between DRIVE and REVERSE while applying slight pressure to the accelerator. In general, the least amount of accelerator pedal pressure to maintain the rocking motion without spinning the wheels or racing the engine is most effective.

CAUTION!

Racing the engine or spinning the wheels may lead to transmission overheating and failure. Allow the engine to idle with the shift lever in NEUTRAL for at least one minute after every five rocking-motion cycles. This will minimize overheating and reduce the risk of transmission failure during prolonged efforts to free a stuck vehicle.

CAUTION!

- **When "rocking" a stuck vehicle by moving between DRIVE and REVERSE, do not spin the wheels faster than 15 mph (24 km/h), or drivetrain damage may result.**
- **Revving the engine or spinning the wheels too fast may lead to transmission overheating and failure. It can also damage the tires. Do not spin the wheels above 30 mph (48 km/h) while in gear (no transmission shifting occurring).**

WARNING!

Fast spinning tires can be dangerous. Forces generated by excessive wheel speeds may cause damage, or even failure, of the axle and tires. A tire could explode and injure someone. Do not spin your vehicle's wheels faster than 30 mph (48 km/h) or for longer than 30 seconds continuously without stopping when you are stuck and do not let anyone near a spinning wheel, no matter what the speed.

EMERGENCY TOW HOOKS — IF EQUIPPED

Your vehicle may be equipped with emergency tow hooks.

NOTE: For off-road recovery, it is recommended to use both of the front tow hooks to minimize the risk of damage to the vehicle.

WARNING!

- **Chains are not recommended for freeing a stuck vehicle. Chains may break, causing serious injury or death.**
- **Stand clear of vehicles when pulling with tow hooks. Tow straps may become disengaged, causing serious injury.**

CAUTION!

Tow hooks are for emergency use only to rescue a vehicle stranded off-road. Do not use tow hooks for tow truck hookup or highway towing. You could damage your vehicle.

SHIFT LEVER OVERRIDE

If a malfunction occurs and the shift lever cannot be moved out of the PARK position, you can use one of the following procedures to temporarily move the shift lever:

Column Shifter — If Equipped

1. Firmly set the parking brake.

2. Turn the ignition switch to the ON/RUN position without starting the engine.

3. Tilt the steering wheel to the full up position

4. Press and maintain firm pressure on the brake pedal.

5. Using a screwdriver or similar tool, press and hold the override tab through the access port (ringed circle) on the bottom of the steering column.

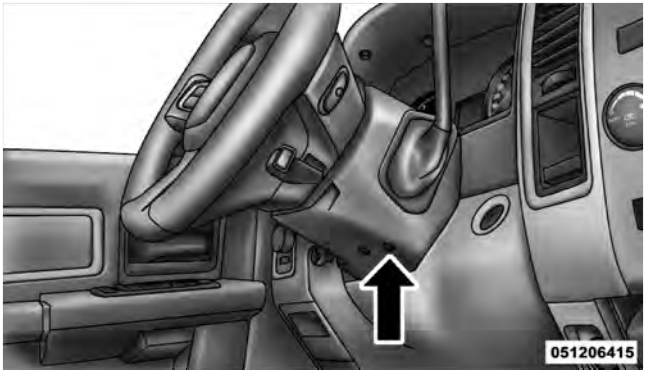

Shift Lever Override Access Port

6. Move the shift lever into the NEUTRAL position.

7. The vehicle may then be started in NEUTRAL.

Center Console Shifter — If Equipped

To access the override, carefully remove (using a flat-bladed screwdriver) the override access cover which is located on the right of the shift lever gate.

1. Firmly set the parking brake.

2. Turn the ignition switch to the ON/RUN position without starting the engine.

3. Press and maintain firm pressure on the brake pedal.

4. Using a screwdriver or similar tool, press and hold the override tab through the access port on the center console.

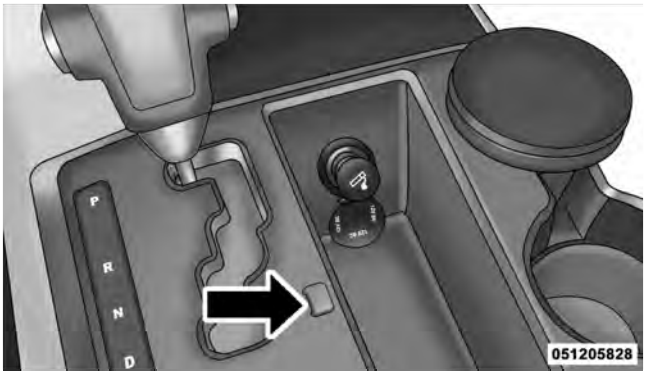

Shift Lever Override Access Cover

5. Move the shift lever into the NEUTRAL position.

6. The vehicle may then be started in NEUTRAL.

7. Reinstall the shift lever override access cover.

TOWING A DISABLED VEHICLE

This section describes procedures for towing a disabled vehicle using a commercial wrecker service. If the transmission and drivetrain are operable, disabled vehicles may also be towed as described under "Recreational Towing" in the "Starting and Operating" section.

Towing Condition	Wheels OFF the Ground	2WD Models	4WD Models
Flat Tow	NONE	If transmission is operable: • Trans in **NEUTRAL** • 30 mph **max**(48 km/h) • 15 miles (24 km) **max** distance	See instructions in "Recreational Towing" under "Starting and Operating" • Auto Trans in **PARK** • Manual Trans in gear (**NOT** Neutral • T/case in **NEUTRAL** • Tow in **forward** direction
Wheel Lift or Dolly Tow	Front		**NOT ALLOWED**
	Rear	OK	**NOT ALLOWED**
Flatbed	**ALL**	**BEST METHOD**	**BEST METHOD**

Proper towing or lifting equipment is required to prevent damage to your vehicle. Use only tow bars and other equipment designed for the purpose, following equipment manufacturer's instructions. Use of safety chains is mandatory. Attach a tow bar or other towing device to main structural members of the vehicle, not to bumpers or associated brackets. State and local laws applying to vehicles under tow must be observed.

If you must use the accessories (wipers, defrosters, etc.) while being towed, the ignition must be in the ON/RUN position, not the ACC position.

If the vehicle's battery is discharged, see Brake/Transmission Interlock Manual Override (under Starting and Operating, Automatic Transmission) for instructions on shifting the automatic transmission out of the PARK position for towing.

CAUTION!

- **Do not attempt to use sling type equipment when towing. When securing the vehicle to a flat bed truck, do not attach to front or rear suspension components. Damage to your vehicle may result from improper towing.**
- **If the vehicle being towed requires steering, the ignition must be in the ON/RUN or ACC position, not in the LOCK position.**

Towing Without The Ignition Key Fob

Special care must be taken when the vehicle is towed with the ignition in the LOCK position. The only approved method of towing without the ignition key is with a flatbed truck. Proper towing equipment is necessary to prevent damage to the vehicle.

Two-Wheel Drive Models

The manufacturer recommends towing your vehicle with all four wheels **OFF** the ground using a flatbed.

If flatbed equipment is not available, and the transmission is operable, the vehicle may be towed (with rear wheels on the ground) with the transmission in **NEUTRAL**. Speed must not exceed 30 mph (48 km/h) and the distance must not exceed 15 miles (24 km).

CAUTION!

Towing faster than 30 mph (48 km/h) or farther than 15 miles (24 km) with rear wheels on the ground can cause severe damage to the transmission. Such damage is not covered by the New Vehicle Limited Warranty.

If the transmission is not operable, or the vehicle must be towed faster than 30 mph (48 km/h) or farther than 15 miles (24 km), tow with the rear wheels **OFF** the ground. Acceptable methods are to tow the vehicle on a flatbed, or with the rear wheels raised using a wheel lift or towing dolly.

Four-Wheel Drive Vehicles

The manufacturer recommends towing with all wheels **OFF** the ground. Acceptable methods are to tow the vehicle on a flatbed or with one end of vehicle raised and the opposite end on a towing dolly.

If flatbed equipment is not available, and the transfer case is operable, the vehicle may be towed (in the forward direction, with **ALL** wheels on the ground), **IF** the transfer case is in NEUTRAL and the transmission is in **PARK** (for automatic transmissions) or in gear (NOT in Neutral, for manual transmissions). Refer to “Recreational Towing” in “Starting and Operating” for further information.

CAUTION!

- **Front or rear wheel lifts should not be used. Internal damage to the transmission or transfer case will occur if a front or rear wheel lift is used when towing.**
- **Failure to follow these towing methods could result in damage to the transmission and/or transfer case. Such damage is not covered by the New Vehicle Limited Warranty.**

MAINTAINING YOUR VEHICLE

CONTENTS

- Engine Compartment — 3.7L 526
- Engine Compartment — 4.7L 527
- Engine Compartment — 5.7L 528
- Onboard Diagnostic System (OBD II) 529
  - Loose Fuel Filler Cap Message 529
- Emissions Inspection And Maintenance Programs 530
- Replacement Parts 531
- Dealer Service 531
- Maintenance Procedures 532
  - Engine Oil 533
  - Engine Oil Filter 535
  - Engine Air Cleaner Filter 536
  - Maintenance-Free Battery 536
  - Air Conditioner Maintenance 538
  - Front Driveshaft Lubrication – 2500/3500 (Four-Wheel Drive) Models (Ram Trucks Only) 539
  - Body Lubrication 539

- Windshield Wiper Blades 540
- Adding Washer Fluid 540
- Exhaust System 541
- Cooling System 544
- Brake System 550
- Rear Axle And 4X4 Front Driving Axle Fluid Level 553
- Transfer Case 554
- Automatic Transmission 554
- Appearance Care And Protection From Corrosion 557

■ Fuses 564
- Totally Integrated Power Module 564

■ Vehicle Storage 569

■ Replacement Bulbs 570

■ Bulb Replacement 571
- Dual Or Quad Headlamp/Front Park And Turn Signal — If Equipped 571
- Fog Lamps 573
- Rear Tail/Stop, Turn Signal And Backup Lamps 573
- Center High-Mounted Stoplamp (CHMSL) With Cargo Lamp 575
- Cab Top Clearance Lamps — If Equipped . . . 576
- Rear Lamp Bar ID Marker (Dual Rear Wheels) — If Equipped 578
- Side Marker Lamps (Dual Rear Wheels) — If Equipped 579

■ Fluid Capacities 580

■ Fluids, Lubricants And Genuine Parts 582
□ Engine 582
□ Chassis 583

ENGINE COMPARTMENT — 3.7L

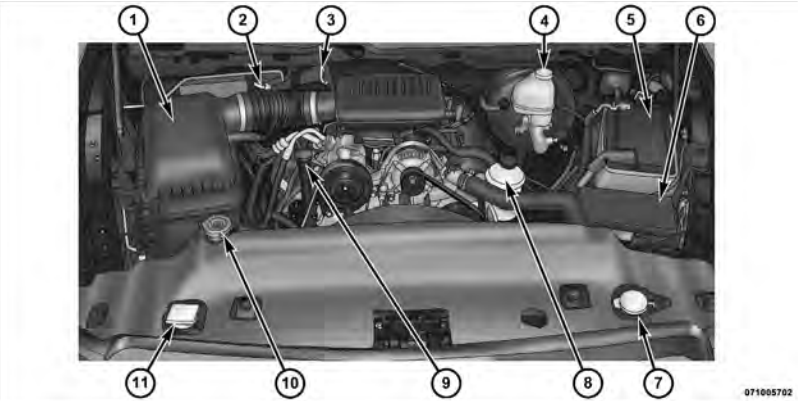

1 — Air Cleaner Filter
2 — Automatic Transmission Dipstick (If Equipped)
3 — Engine Oil Dipstick
4 — Brake Fluid Reservoir
5 — Battery
6 — Integrated Power Module (Fuses)
7 — Washer Fluid Reservoir
8 — Power Steering Fluid Reservoir
9 — Engine Oil Fill
10 — Coolant Pressure Cap
11 — Engine Coolant Reservoir

ENGINE COMPARTMENT — 4.7L

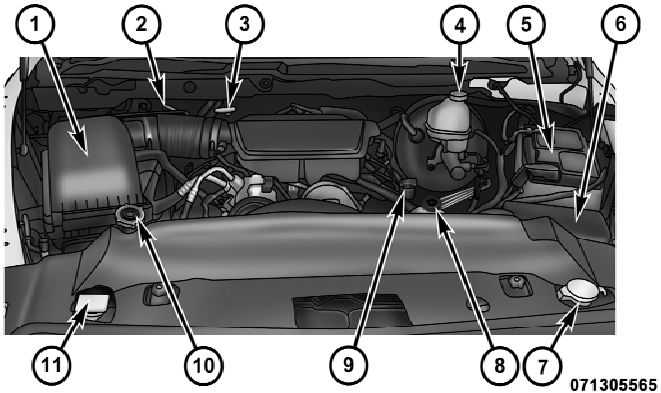

1 — Air Cleaner Filter
2 — Automatic Transmission Dipstick
3 — Engine Oil Dipstick
4 — Brake Fluid Reservoir
5 — Battery
6 — Integrated Power Module (Fuses)
7 — Washer Fluid Reservoir
8 — Power Steering Fluid Reservoir
9 — Engine Oil Fill
10 — Coolant Pressure Cap
11 — Engine Coolant Reservoir

ENGINE COMPARTMENT — 5.7L

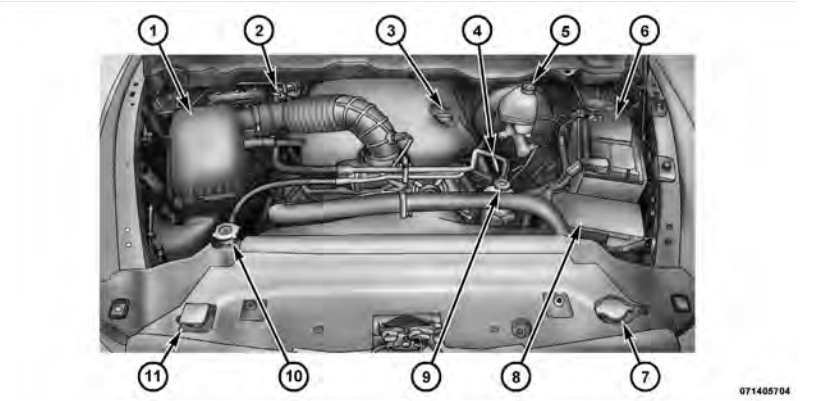

1 — Air Cleaner Filter
2 — Automatic Transmission Dipstick
3 — Engine Oil Fill
4 — Engine Oil Dipstick
5 — Brake Fluid Reservoir
6 — Battery
7 — Washer Fluid Reservoir
8 — Integrated Power Module (Fuses)
9 — Power Steering Fluid Reservoir
10 — Coolant Pressure Cap
11 — Engine Coolant Reservoir

ONBOARD DIAGNOSTIC SYSTEM (OBD II)

Your vehicle is equipped with a sophisticated onboard diagnostic system called OBD II. This system monitors the performance of the emissions, engine, and automatic transmission control systems. When these systems are operating properly, your vehicle will provide excellent performance and fuel economy, as well as engine emissions well within current government regulations.

If any of these systems require service, the OBD II system will turn on the "Malfunction Indicator Light (MIL)." It will also store diagnostic codes and other information to assist your service technician in making repairs. Although your vehicle will usually be drivable and not need towing, see your authorized dealer for service as soon as possible.

CAUTION!

- **Prolonged driving with the MIL on could cause further damage to the emission control system. It could also affect fuel economy and drivability. The vehicle must be serviced before any emissions tests can be performed.**
- **If the MIL is flashing, while the engine is running, severe catalytic converter damage and power loss will soon occur. Immediate service is required.**

Loose Fuel Filler Cap Message

If the vehicle diagnostic system determines that the fuel filler cap is loose, improperly installed, or damaged, a loose gascap indicator will display in the EVIC telltale display area. Refer to "Electronic Vehicle Information Center (EVIC) in "Understanding Your Instrument Panel" for further information. Tighten the fuel filler cap properly and press

the SELECT button to turn off the message. If the problem continues, the message will appear the next time the vehicle is started.

A loose, improperly installed, or damaged fuel filler cap may also turn on the Malfunction Indicator Light (MIL).

EMISSIONS INSPECTION AND MAINTENANCE PROGRAMS

In some localities, it may be a legal requirement to pass an inspection of your vehicle's emissions control system. Failure to pass could prevent vehicle registration.

For states that require an Inspection and Maintenance (I/M), this check verifies the "Malfunction Indicator Light (MIL)" is functioning and is not on when the engine is running, and that the OBD II system is ready for testing.

Normally, the OBD II system will be ready. The OBD II system may **not** be ready if your vehicle was recently serviced, recently had a dead battery or a battery replacement. If the OBD II system should be determined not ready for the I/M test, your vehicle may fail the test.

Your vehicle has a simple ignition key-actuated test, which you can use prior to going to the test station. To check if your vehicle's OBD II system is ready, you must do the following:

1. Turn the ignition switch to the ON position, but do not crank or start the engine.

2. If you crank or start the engine, you will have to start this test over.

3. As soon as you turn the ignition switch to the ON position, you will see the MIL symbol come on as part of a normal bulb check.

4. Approximately 15 seconds later, one of two things will happen:

a. The MIL will flash for about 10 seconds and then return to being fully illuminated until you turn OFF the ignition or start the engine. This means that your vehicle's OBD II system is **not ready** and you should **not** proceed to the I/M station.

b. The MIL will not flash at all and will remain fully illuminated until you turn OFF the ignition or start the engine. This means that your vehicle's OBD II system is **ready** and you can proceed to the I/M station.

If your OBD II system is **not ready,** you should see your authorized dealer or repair facility. If your vehicle was recently serviced or had a battery failure or replacement, you may need to do nothing more than drive your vehicle as you normally would in order for your OBD II system to update. A recheck with the above test routine may then indicate that the system is now ready.

Regardless of whether your vehicle's OBD II system is ready or not, if the MIL is illuminated during normal vehicle operation you should have your vehicle serviced before going to the I/M station. The I/M station can fail your vehicle because the MIL is on with the engine running.

REPLACEMENT PARTS

Use of genuine MOPAR® parts for normal/scheduled maintenance and repairs is highly recommended to ensure the designed performance. Damage or failures caused by the use of non-MOPAR® parts for maintenance and repairs will not be covered by the manufacturer's warranty.

DEALER SERVICE

Your authorized dealer has the qualified service personnel, special tools, and equipment to perform all service operations in an expert manner. Service Manuals are available which include detailed service information for

your vehicle. Refer to these Service Manuals before attempting any procedure yourself.

NOTE: Intentional tampering with emissions control systems may void your warranty and could result in civil penalties being assessed against you.

WARNING!

You can be badly injured working on or around a motor vehicle. Only do service work for which you have the knowledge and the proper equipment. If you have any doubt about your ability to perform a service job, take your vehicle to a competent mechanic.

MAINTENANCE PROCEDURES

The pages that follow contain the **required** maintenance services determined by the engineers who designed your vehicle.

Besides those maintenance items specified in the fixed maintenance schedule, there are other components which may require servicing or replacement in the future.

CAUTION!

- **Failure to properly maintain your vehicle or perform repairs and service when necessary could result in more costly repairs, damage to other components or negatively impact vehicle performance. Immediately have potential malfunctions examined by an authorized Chrysler Group LLC dealership or qualified repair center.**

(Continued)

CAUTION! (Continued)

- **Your vehicle has been built with improved fluids that protect the performance and durability of your vehicle and also allow extended maintenance intervals. Do not use chemical flushes in these components as the chemicals can damage your engine, transmission, power steering or air conditioning. Such damage is not covered by the New Vehicle Limited Warranty. If a flush is needed because of component malfunction, use only the specified fluid for the flushing procedure.**

Engine Oil

Checking Oil Level

To assure proper lubrication of your vehicle's engine, the engine oil must be maintained at the correct level. Check the oil level at regular intervals, such as every fuel stop. The best time to check the engine oil level is about five minutes after a fully warmed up engine is shut off.

Checking the oil while the vehicle is on level ground will improve the accuracy of the oil level readings. Always maintain the oil level within the SAFE zone on the dipstick. Adding one quart of oil when the reading is at the bottom of the SAFE zone will result in a reading at the top of the safe zone on these engines.

CAUTION!

Overfilling or underfilling the crankcase will cause oil aeration or loss of oil pressure. This could damage your engine.

Change Engine Oil

The oil change indicator system will remind you that it is time to take your vehicle in for scheduled maintenance. Refer to "Maintenance Schedule" for further information.

NOTE: Under no circumstances should oil change intervals exceed 8,000 miles (13 000 km) or six months, whichever occurs first.

Engine Oil Selection

For best performance and maximum protection under all types of operating conditions, the manufacturer only recommends engine oils that are API Certified and meet the requirements of Chrysler Material Standard MS-6395.

American Petroleum Institute (API) Engine Oil Identification Symbol

This symbol means that the oil has been certified by the American Petroleum Institute (API). The manufacturer only recommends API Certified engine oils.

CAUTION!

Do not use chemical flushes in your engine oil as the chemicals can damage your engine. Such damage is not covered by the New Vehicle Limited Warranty.

Engine Oil Viscosity (SAE Grade)

SAE 5W-20 engine oil is recommended for all operating temperatures. This engine oil improves low temperature starting and vehicle fuel economy. The engine oil filler cap also shows the recommended engine oil viscosity for your engine. For information on engine oil filler cap location, refer to "Engine Compartment" in "Maintaining Your Vehicle" for further information.

NOTE: Vehicles equipped with a 5.7L engine must use SAE 5W-20 oil. Failure to do so may result in improper operation of the Multi-Displacement System (MDS). Refer to "Multi-Displacement System" in "Starting and Operating" for further information.

Lubricants which do not have both the engine oil certification mark and the correct SAE viscosity grade number should not be used.

NOTE: For 2500/3500 trucks with a 5.7L engine operating under a gross combined weight rating of 14,000 lbs (6 350 kg) or greater, SAE 5W-30 engine oil is recommended for all operating temperatures.

Synthetic Engine Oils

You may use synthetic engine oils if the recommended oil quality requirements are met and the recommended maintenance intervals for oil and filter changes are followed.

Materials Added To Engine Oil

The manufacturer strongly recommends against the addition of any additives (other than leak detection dyes) to the engine oil. Engine oil is an engineered product and its performance may be impaired by supplemental additives.

Disposing Of Used Engine Oil And Oil Filters

Care should be taken in disposing of used engine oil and oil filters from your vehicle. Used oil and oil filters, indiscriminately discarded, can present a problem to the environment. Contact your authorized dealer, service station or governmental agency for advice on how and where used oil and oil filters can be safely discarded in your area.

Engine Oil Filter

The engine oil filter should be replaced with a new filter at every engine oil change.

Engine Oil Filter Selection

The manufacturer's engines have a full-flow type oil filter. Use a filter of this type for replacement. The quality of replacement filters varies considerably. Only high-quality filters should be used to assure most efficient service. MOPAR® engine oil filters are a high-quality oil filter and are recommended.

Engine Air Cleaner Filter

Refer to the "Maintenance Schedule" for the proper maintenance intervals.

WARNING!

The air induction system (air cleaner, hoses, etc.) can provide a measure of protection in the case of engine backfire. Do not remove the air induction system (air cleaner, hoses, etc.) unless such removal is necessary for repair or maintenance. Make sure that no one is near the engine compartment before starting the vehicle with the air induction system (air cleaner, hoses, etc.) removed. Failure to do so can result in serious personal injury.

Engine Air Cleaner Filter Selection

The quality of replacement engine air cleaner filters varies considerably. Only high quality filters should be used to assure most efficient service. MOPAR® engine air cleaner filters are a high quality filter and are recommended.

Maintenance-Free Battery

Your vehicle is equipped with a maintenance-free battery. You will never have to add water, nor is periodic maintenance required.

WARNING!

- **Battery fluid is a corrosive acid solution and can burn or even blind you. Do not allow battery fluid to contact your eyes, skin, or clothing. Do not lean over a battery when attaching clamps. If acid splashes in eyes or on skin, flush the area immediately with large amounts of water. Refer to "Jump-Starting Procedures" in "What To Do In Emergencies" for further information.**

(Continued)

WARNING! (Continued)

- **Battery gas is flammable and explosive. Keep flame or sparks away from the battery. Do not use a booster battery or any other booster source with an output greater than 12 Volts. Do not allow cable clamps to touch each other.**
- **Battery posts, terminals, and related accessories contain lead and lead compounds. Wash hands after handling.**

CAUTION!

- **It is essential when replacing the cables on the battery that the positive cable is attached to the positive post and the negative cable is attached to the negative post. Battery posts are marked positive (+) and negative (-) and are identified on the battery case. Cable clamps should be tight on the terminal posts and free of corrosion.**
- **If a "fast charger" is used while the battery is in the vehicle, disconnect both vehicle battery cables before connecting the charger to the battery. Do not use a "fast charger" to provide starting voltage.**

Air Conditioner Maintenance

For best possible performance, your air conditioner should be checked and serviced by an authorized dealer at the start of each warm season. This service should include cleaning of the condenser fins and a performance test. Drive belt tension should also be checked at this time.

CAUTION!

Do not use chemical flushes in your air conditioning system as the chemicals can damage your air conditioning components. Such damage is not covered by the New Vehicle Limited Warranty.

WARNING!

- **Use only refrigerants and compressor lubricants approved by the manufacturer for your air conditioning system. Some unapproved refrigerants are flammable and can explode, injuring you. Other unapproved refrigerants or lubricants can cause the system to fail, requiring costly repairs. Refer to Warranty Information Book, located on the DVD, for further warranty information.**
- **The air conditioning system contains refrigerant under high pressure. To avoid risk of personal injury or damage to the system, adding refrigerant or any repair requiring lines to be disconnected should be done by an experienced repairman.**

NOTE: Use only manufacturer approved A/C System Sealers, Stop Leak Products, Seal Conditioners, Compressor Oil, or Refrigerants.

Refrigerant Recovery And Recycling

R-134a Air Conditioning Refrigerant is a hydrofluorocarbon (HFC) that is endorsed by the Environmental Protection Agency (EPA) and is an ozone-saving product. However, the manufacturer recommends that air conditioning service be performed by authorized dealers or other service facilities using recovery and recycling equipment.

Front Driveshaft Lubrication – 2500/3500 (Four-Wheel Drive) Models (Ram Trucks Only)

Lubricate the front driveshaft grease fitting at each oil change. Refer to the "Maintenance Schedule" for the proper maintenance intervals. Use MOPAR® Type MS-6560 (lithium-based grease), or equivalent.

Body Lubrication

Locks and all body pivot points, including such items as seat tracks, door hinge pivot points and rollers, liftgate, tailgate, sliding doors and hood hinges, should be lubricated periodically with a lithium based grease, such as MOPAR® Spray White Lube or equivalent, to assure quiet, easy operation and to protect against rust and wear. Prior to the application of any lubricant, the parts concerned should be wiped clean to remove dust and grit. After lubricating, excess oil and grease should be removed. Particular attention should also be given to hood latching components to ensure proper function. When performing other underhood services, the hood latch, release mechanism and safety catch should be cleaned and lubricated.

The external lock cylinders should be lubricated twice a year, preferably in the Fall and Spring. Apply a small amount of a high quality lubricant, such as MOPAR® Lock Cylinder Lubricant or equivalent directly into the lock cylinder.

Windshield Wiper Blades

Clean the rubber edges of the wiper blades and the windshield periodically with a sponge or soft cloth and a mild nonabrasive cleaner. This will remove accumulations of salt or road film.

Operation of the wipers on dry glass for long periods may cause deterioration of the wiper blades. Always use washer fluid when using the wipers to remove salt or dirt from a dry windshield.

Avoid using the wiper blades to remove frost or ice from the windshield. Keep the blade rubber out of contact with petroleum products such as engine oil, gasoline, etc.

NOTE: Life expectancy of wiper blades varies depending on geographical area and frequency of use. Poor performance of blades may be present with chattering, marks, water lines or wet spots. If any of these conditions are present, clean the wiper blades or replace as necessary.

Adding Washer Fluid

The fluid reservoir is located under the hood and should be checked for fluid level at regular intervals. Fill the reservoir with windshield washer solvent only (not radiator antifreeze). When refilling the washer fluid reservoir, take some washer fluid and apply it to a cloth or towel and wipe the wiper blades clean. This will help blade performance.

To prevent freeze-up of your windshield washer system in cold weather, select a solution or mixture that meets or exceeds the temperature range of your climate. This rating information can be found on most washer fluid containers.

WARNING!

Commercially available windshield washer solvents are flammable. They could ignite and burn you. Care must be exercised when filling or working around the washer solution.

After the engine has warmed up, operate the defroster for a few minutes to reduce the possibility of smearing or freezing the fluid on the cold windshield. Windshield washer solution used with water as directed on the container, aids cleaning action, reduces the freezing point to avoid line clogging, and is not harmful to paint or trim.

Exhaust System

The best protection against carbon monoxide entry into the vehicle body is a properly maintained engine exhaust system.

If you notice a change in the sound of the exhaust system; or if the exhaust fumes can be detected inside the vehicle; or when the underside or rear of the vehicle is damaged; have an authorized technician inspect the complete exhaust system and adjacent body areas for broken, damaged, deteriorated, or mispositioned parts. Open seams or loose connections could permit exhaust fumes to seep into the passenger compartment. In addition, inspect the exhaust system each time the vehicle is raised for lubrication or oil change. Replace as required.

WARNING!

- **Exhaust gases can injure or kill. They contain carbon monoxide (CO), which is colorless and odorless. Breathing it can make you unconscious and can eventually poison you. To avoid breathing CO, refer to "Safety Tips/Exhaust Gas" in "Things To Know Before Starting Your Vehicle" for further information.**
- **A hot exhaust system can start a fire if you park over materials that can burn. Such materials might be grass or leaves coming into contact with your exhaust system. Do not park or operate your vehicle in areas where your exhaust system can contact anything that can burn.**

CAUTION!

- **The catalytic converter requires the use of unleaded fuel only. Leaded gasoline will destroy the effectiveness of the catalyst as an emissions control device and may seriously reduce engine performance and cause serious damage to the engine.**
- **Damage to the catalytic converter can result if your vehicle is not kept in proper operating condition. In the event of engine malfunction, particularly involving engine misfire or other apparent loss of performance, have your vehicle serviced promptly. Continued operation of your vehicle with a severe malfunction could cause the converter to overheat, resulting in possible damage to the converter and vehicle.**

Under normal operating conditions, the catalytic converter will not require maintenance. However, it is important to keep the engine properly tuned to assure proper catalyst operation and prevent possible catalyst damage.

NOTE: Intentional tampering with emissions control systems can result in civil penalties being assessed against you.

In unusual situations involving grossly malfunctioning engine operation, a scorching odor may suggest severe and abnormal catalyst overheating. If this occurs, stop the vehicle, turn off the engine and allow it to cool. Service, including a tune-up to manufacturer's specifications, should be obtained immediately.

To minimize the possibility of catalytic converter damage:

- Do not shut off the engine or interrupt the ignition, when the transmission is in gear and the vehicle is in motion.
- Do not try to start the engine by pushing or towing the vehicle.
- Do not idle the engine with any spark plug wires disconnected or removed, such as when diagnostic testing, or for prolonged periods during very rough idle or malfunctioning operating conditions.

Cooling System

WARNING!

You or others can be badly burned by hot coolant or steam from your radiator. If you see or hear steam coming from under the hood, do not open the hood until the radiator has had time to cool. Never try to open a cooling system pressure cap when the radiator is hot.

Engine Coolant Checks

Check the engine coolant (antifreeze) protection every 12 months (before the onset of freezing weather, where applicable). If the engine coolant (antifreeze) is dirty or rusty in appearance, the system should be drained, flushed and refilled with fresh coolant. Check the front of the A/C condenser for any accumulation of bugs, leaves, etc. If dirty, clean by gently spraying water from a garden hose vertically down the face of the condenser.

Check the coolant recovery bottle tubing for brittle rubber, cracking, tears, cuts and tightness of the connection at the bottle and radiator. Inspect the entire system for leaks.

With the engine at normal operating temperature (but not running), check the cooling system pressure cap for proper vacuum sealing by draining a small amount of engine coolant (antifreeze) from the radiator drain cock. If the cap is sealing properly, the engine coolant (antifreeze) will begin to drain from the coolant recovery bottle. DO NOT REMOVE THE COOLANT PRESSURE CAP WHEN THE COOLING SYSTEM IS HOT.

Cooling System – Drain, Flush, And Refill

If the engine coolant (antifreeze) is dirty or contains a considerable amount of sediment, clean and flush with a reliable cooling system cleaner. Follow with a thorough rinsing to remove all deposits and chemicals. Properly dispose of old engine coolant (antifreeze) solution.

Refer to the "Maintenance Schedule" for the proper maintenance intervals.

Selection Of Coolant

Use only the manufacturer's recommended engine coolant (antifreeze). Refer to "Fluids, Lubricants, and Genuine Parts" in "Maintaining Your Vehicle" for further information.

CAUTION!

- **Mixing of engine coolant (antifreeze) other than specified HOAT engine coolant (antifreeze), may result in engine damage and may decrease corrosion protection. If a non-HOAT engine coolant (antifreeze) is introduced into the cooling system in an emergency, it should be replaced with the specified engine coolant (antifreeze) as soon as possible.**

(Continued)

CAUTION! (Continued)

- **Do not use water alone or alcohol-based engine coolant (antifreeze) products. Do not use additional rust inhibitors or antirust products, as they may not be compatible with the engine coolant (antifreeze) and may plug the radiator.**
- **This vehicle has not been designed for use with Propylene Glycol based engine coolant (antifreeze). Use of Propylene Glycol based engine coolant (antifreeze) is not recommended.**

Adding Coolant

Your vehicle has been built with an improved engine coolant (antifreeze) that allows extended maintenance intervals. This engine coolant (antifreeze) can be used up to five years or 104,000 miles (169 000 km) before replacement. To prevent reducing this extended maintenance period, it is important that you use the same engine coolant (antifreeze) throughout the life of your vehicle.

Please review these recommendations for using Hybrid Organic Additive Technology (HOAT) engine coolant (antifreeze). When adding engine coolant (antifreeze):

- The manufacturer recommends using MOPAR® Antifreeze/Coolant 5 Year/100,000 Mile Formula HOAT (Hybrid Organic Additive Technology) or equivalent.
- Mix a minimum solution of 50% HOAT engine coolant and distilled water. Use higher concentrations (not to exceed 70%) if temperatures below −34°F (−37°C) are anticipated.
- Use only high purity water such as distilled or deionized water when mixing the water/engine coolant (antifreeze) solution. The use of lower quality water will reduce the amount of corrosion protection in the engine cooling system.

Please note that it is the owner's responsibility to maintain the proper level of protection against freezing according to the temperatures occurring in the area where the vehicle is operated.

NOTE: Mixing engine coolant (antifreeze) types will decrease the life of the engine coolant (antifreeze) and will require more frequent coolant changes.

Cooling System Pressure Cap

The cap must be fully tightened to prevent loss of engine coolant (antifreeze), and to ensure that the engine coolant (antifreeze) will return to the radiator from the coolant recovery bottle.

The cap should be inspected and cleaned if there is any accumulation of foreign material on the sealing surfaces.

WARNING!

- **The warning words "DO NOT OPEN HOT" on the cooling system pressure cap are a safety precaution. Never add engine coolant (antifreeze) when the engine is overheated. Do not loosen or remove the cap to cool an overheated engine. Heat causes pressure to build up in the cooling system. To prevent scalding or injury, do not remove the pressure cap while the system is hot or under pressure.**
- **Do not use a pressure cap other than the one specified for your vehicle. Personal injury or engine damage may result.**

Disposal Of Used Coolant

Used ethylene glycol-based engine coolant (antifreeze) is a regulated substance requiring proper disposal. Check with your local authorities to determine the disposal

rules for your community. To prevent ingestion by animals or children do not store ethylene glycol-based engine coolant (antifreeze) in open containers or allow it to remain in puddles on the ground. If ingested by a child or pet, seek emergency assistance immediately. Clean up any ground spills immediately.

Checking Coolant Level – 3.7L, 4.7L, and 5.7L Engines

With the engine OFF and cold, the level of the engine coolant should be between the MIN and MAX range on the dipstick.

To check the coolant level:

1. Open the coolant reservoir.

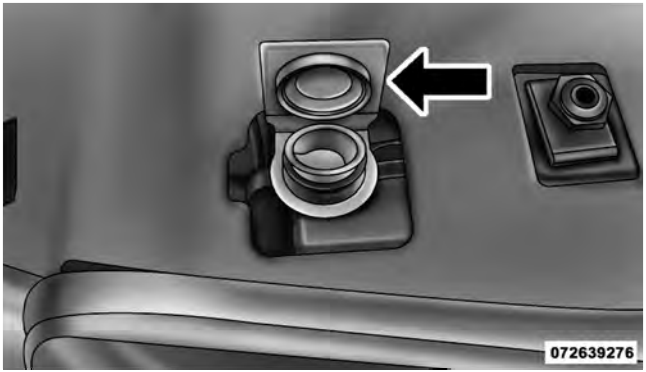

2. Lift and remove the plastic dipstick from the reservoir neck.

3. Check the coolant level on the dipstick.

The radiator normally remains completely full, so there is no need to remove the radiator cap unless checking for engine coolant (antifreeze) freeze point or replacing engine coolant (antifreeze). Advise your service attendant of this. As long as the engine operating temperature is satisfactory, the coolant bottle need only be checked once a month.

When additional engine coolant (antifreeze) is needed to maintain the proper level, it should be added to the coolant bottle. Do not overfill.

Points To Remember

NOTE: When the vehicle is stopped after a few miles (a few kilometers) of operation, you may observe vapor coming from the front of the engine compartment. This is normally a result of moisture from rain, snow, or high humidity accumulating on the radiator and being vaporized when the thermostat opens, allowing hot coolant to enter the radiator.

If an examination of your engine compartment shows no evidence of radiator or hose leaks, the vehicle may be safely driven. The vapor will soon dissipate.

- Do not overfill the coolant recovery bottle.
- Check engine coolant (antifreeze) freeze point in the radiator and in the coolant recovery bottle. If engine coolant (antifreeze) needs to be added, contents of coolant recovery bottle must also be protected against freezing.
- If frequent engine coolant (antifreeze) additions are required, or if the level in the coolant recovery bottle does not drop when the engine cools, the cooling system should be pressure tested for leaks.
- Maintain engine coolant (antifreeze) concentration at 50% HOAT engine coolant (antifreeze) (minimum) and distilled water for proper corrosion protection of your engine, which contains aluminum components.
- Make sure that the radiator and coolant recovery bottle overflow hoses are not kinked or obstructed.
- Keep the front of the radiator clean. If your vehicle is equipped with air conditioning, keep the front of the condenser clean, also.
- Do not change the thermostat for Summer or Winter operation. If replacement is ever necessary, install ONLY the correct type thermostat. Other designs may result in unsatisfactory engine coolant (antifreeze) performance, poor gas mileage, and increased emissions.

Brake System

In order to assure brake system performance, all brake system components should be inspected periodically. Refer to the “Maintenance Schedule” for the proper maintenance intervals.

WARNING!

Riding the brakes can lead to brake failure and possibly a collision. Driving with your foot resting or riding on the brake pedal can result in abnormally high brake temperatures, excessive lining wear, and possible brake damage. You would not have your full braking capacity in an emergency.

Brake Fluid Level Check

The fluid level of the master cylinder should be checked when performing under the hood service or immediately if the brake system warning lamp indicates system failure.

The brake master cylinder has a translucent plastic reservoir. On the outboard side of the reservoir, there is a "MAX" dot and an "MIN" dot. The fluid level must be kept within these two dots. Do not add fluid above the MAX mark because leakage may occur at the cap.

With disc brakes the fluid level can be expected to fall as the brake linings wear. However, an unexpected drop in fluid level may be caused by a leak and a system check should be conducted.

Use only the manufacturer's recommended brake fluid. Refer to "Fluids, Lubricants, and Genuine Parts" in "Maintaining Your Vehicle" for further information.

WARNING!

- **Use only manufacturer's recommended brake fluid. Refer to "Fluids, Lubricants, and Genuine Parts" in "Maintaining Your Vehicle" for further information. Using the wrong type of brake fluid can severely damage your brake system and/or impair its performance. The proper type of brake fluid for your vehicle is also identified on the original factory installed hydraulic master cylinder reservoir.**

(Continued)

WARNING! (Continued)

- **To avoid contamination from foreign matter or moisture, use only new brake fluid or fluid that has been in a tightly closed container. Keep the master cylinder reservoir cap secured at all times. Brake fluid in a open container absorbs moisture from the air resulting in a lower boiling point. This may cause it to boil unexpectedly during hard or prolonged braking, resulting in sudden brake failure. This could result in a collision.**
- **Overfilling the brake fluid reservoir can result in spilling brake fluid on hot engine parts, causing the brake fluid to catch fire. Brake fluid can also damage painted and vinyl surfaces, care should be taken to avoid its contact with these surfaces.**

(Continued)

WARNING! (Continued)

- **Do not allow petroleum based fluid to contaminate the brake fluid. Brake seal components could be damaged, causing partial or complete brake failure. This could result in a collision.**

Rear Axle And 4x4 Front Driving Axle Fluid Level

For normal service, periodic fluid level checks are not required. When the vehicle is serviced for other reasons the exterior surfaces of the axle assembly should be inspected. If gear oil leakage is suspected inspect the fluid level. Refer to "Fluids, Lubricants, and Genuine Parts" in "Maintaining Your Vehicle" for further information.

This inspection should be made with the vehicle in a level position. The fluid level should be even with the bottom of the fill hole for the manufacturer's C205F HD front axles. The fluid level should be 5/8 in (16 mm) below the fill hole on 9 1/4 in manufacturer's rear axles.

For all 2500/3500 Model axles, the fluid level should be 1/4" ± 1/4 in (6.4 mm ± 6.4 mm) below the fill hole on the 9.25 in front and 3/4 in ± 1/4 in (19 mm ± 6.4 mm) on 10.5 in rear axles. The 11.5 in rear axle level should be 1/4 in ± 1/4 in (6.4 mm ± 6.4 mm) below the fill hole.

Drain And Refill

Refer to the "Maintenance Schedule" for the proper maintenance intervals.

Lubricant Selection

Refer to "Fluids, Lubricants, and Genuine Parts" in "Maintaining Your Vehicle" for further information.

NOTE: The presence of water in the gear lubricant will result in corrosion and possible failure of differential components. Operation of the vehicle in water, as may be encountered in some off-highway types of service, will require draining and refilling the axle to avoid damage.

Limited-Slip Differentials

This vehicle requires that 4 oz. (118 ml) MOPAR® Limited Slip Additive or equivalent be added to the gear lubricant. Refer to "Fluids, Lubricants, and Genuine Parts" in "Maintaining Your Vehicle" for further information. The MOPAR® Limited Slip Additive or equivalent should be added to the gear lubricant whenever a fluid change is made.

2500/3500 Model Axles **DO NOT REQUIRE** any limited slip oil additive (friction modifiers).

Transfer Case

Drain And Refill

Refer to the "Maintenance Schedule" for the proper maintenance intervals.

Lubricant Selection

Refer to "Fluids, Lubricants, and Genuine Parts" in "Maintaining Your Vehicle" for further information.

Fluid Level Check

This fluid level can be checked by removing the filler plug. The fluid level should be to the bottom edge of the filler plug hole with the vehicle in a level position.

Automatic Transmission

Selection Of Lubricant

It is important that the proper lubricant is used in the transmission to assure optimum transmission performance. Use only the manufacturer's recommended transmission fluid. Refer to "Fluids, Lubricants, and Genuine Parts" in "Maintaining Your Vehicle" for further information. It is important that the transmission fluid be maintained at the prescribed level using the recommended fluid.

CAUTION!

- **Do not use chemical flushes in your transmission as the chemicals can damage your transmission components. Such damage is not covered by the New Vehicle Limited Warranty.**
- **Using a transmission fluid other than the manufacturer's recommended fluid may cause deterioration in transmission shift quality and/or torque converter shudder. Using a transmission fluid other than the manufacturer's recommended fluid will result in more frequent fluid and filter changes. Refer to "Fluids, Lubricants, and Genuine Parts" in "Maintaining Your Vehicle" for further information.**

Special Additives

Automatic Transmission Fluid (ATF) is an engineered product and its performance may be impaired by supplemental additives. Therefore, do not add any fluid additives to the transmission. The only exception to this policy is the use of special dyes to aid in detecting fluid leaks. In addition, avoid using transmission sealers as they may adversely affect seals.

Fluid Level Check

If equipped with a dipstick, use the following procedure. If your vehicle has a capped dipstick tube, it is sealed and should not be tampered with. Your authorized dealer has the proper tools to ensure that the fluid level is set properly. The fluid level should be checked when the engine is fully warmed up and the fluid in the transmission is at normal operating temperature. Operation of the transmission with an improper fluid level will greatly reduce the life of the transmission and of the fluid. Check the fluid level whenever the vehicle is serviced.

Fluid Level Check – 42RLE/545RFE

Check the fluid level while the transmission is at normal operating temperature 82°C (180°F). This occurs after at least 15 miles (25 km) of driving. At normal operating temperature the fluid cannot be held comfortably between the fingertips.

To check the automatic transmission fluid level properly, the following procedure must be used:

1. Operate the engine at idle speed and normal operating temperature.

2. The vehicle must be on level ground.

3. Fully apply the parking brake and press the brake pedal.

4. Place the shift lever momentarily into each gear position ending with the lever in PARK.

5. Remove the dipstick, wipe it clean and reinsert it until seated.

6. Remove the dipstick again and note the fluid level on both sides. The fluid level should be between the "HOT" (upper) reference holes on the dipstick at normal operating temperature. Verify that solid coating of oil is seen on both sides of the dipstick. If the fluid is low, add as required into the dipstick tube. **Do not overfill.** After adding any quantity of oil through the oil fill tube, wait a minimum of two minutes for the oil to fully drain into the transmission before rechecking the fluid level.

NOTE: If it is necessary to check the transmission **below** the operating temperature, the fluid level should be between the two "COLD" (lower) holes on the dipstick with the fluid at approximately 70°F (21°C) (room temperature). If the fluid level is correctly established at room temperature, it should be between the "HOT" (upper) reference holes when the transmission reaches 180°F (82°C). Remember it is best to check the level at the normal operating temperature.

CAUTION!

Be aware that if the fluid temperature is below 50°F (10°C) it may not register on the dipstick. Do not add fluid until the temperature is elevated enough to produce an accurate reading.

7. Check for leaks. Release parking brake.

To prevent dirt and water from entering the transmission after checking or replenishing fluid, make certain that the dipstick cap is properly reseated. It is normal for the dipstick cap to spring back slightly from its fully seated position, as long as its seal remains engaged in the dipstick tube.

Automatic Transmission Fluid And Filter Change
Refer to the "Maintenance Schedule" for the proper maintenance intervals.

NOTE: If the transmission is disassembled for any reason, the fluid and filter(s) should be changed.

It is important that proper lubricant is used in the transmission. Refer to "Fluids, Lubricants, and Genuine Parts" in "Maintaining Your Vehicle" for further information.

Appearance Care And Protection From Corrosion

Protection Of Body And Paint From Corrosion
Vehicle body care requirements vary according to geographic locations and usage. Chemicals that make roads passable in snow and ice, and those that are sprayed on trees and road surfaces during other seasons, are highly corrosive to the metal in your vehicle. Outside parking, which exposes your vehicle to airborne contaminants, road surfaces on which the vehicle is operated, extreme hot or cold weather and other extreme conditions will have an adverse affect on paint, metal trim, and underbody protection.

The following maintenance recommendations will enable you to obtain maximum benefit from the corrosion resistance built into your vehicle.

What Causes Corrosion?

Corrosion is the result of deterioration or removal of paint and protective coatings from your vehicle.

The most common causes are:

- Road salt, dirt and moisture accumulation.
- Stone and gravel impact.
- Insects, tree sap and tar.
- Salt in the air near seacoast localities.
- Atmospheric fallout/industrial pollutants.

Washing

- Wash your vehicle regularly. Always wash your vehicle in the shade using MOPAR® Car Wash or equivalent, or a mild car wash soap and rinse the panels completely with clear water.
- If insects, tar or other similar deposits have accumulated on your vehicle, use MOPAR® Super Kleen Bug and Tar Remover or equivalent to remove.
- Use a high quality cleaner wax, such as MOPAR® Cleaner Wax or equivalent to remove road film, stains and to protect your paint finish. Take care never to scratch the paint.
- Avoid using abrasive compounds and power buffing that may diminish the gloss or thin out the paint finish.

CAUTION!

- **Do not use abrasive or strong cleaning materials such as steel wool or scouring powder which will scratch metal and painted surfaces.**
- **Use of power washers exceeding 1,200 psi (8 274 kPa) can result in damage or removal of paint and decals.**

Special Care

- If you drive on salted or dusty roads or if you drive near the ocean, hose off the undercarriage at least once a month.
- It is important that the drain holes in the lower edges of the doors, rocker panels and trunk be kept clear and open.
- If you detect any stone chips or scratches in the paint, touch them up immediately. The cost of such repairs is considered the responsibility of the owner.
- If your vehicle is damaged due to a collision or similar cause which destroys the paint and protective coating, have your vehicle repaired as soon as possible. The cost of such repairs is considered the responsibility of the owner.
- If you carry special cargo such as chemicals, fertilizers, de-icer salt, etc., be sure that such materials are well packaged and sealed.
- If a lot of driving is done on gravel roads, consider mud or stone shields behind each wheel.
- Use MOPAR® Touch Up Paint or equivalent on scratches as soon as possible. Your authorized dealer has touch up paint to match the color of your vehicle.

Wheel And Wheel Trim Care

All wheels and wheel trim, especially aluminum and chrome-plated wheels should be cleaned regularly with a mild soap and water to prevent corrosion. To remove heavy soil and/or excessive brake dust, use MOPAR® Wheel Cleaner or equivalent or select a nonabrasive, non-acidic cleaner. Do not use scouring pads, steel wool, a bristle brush, or metal polishes. Only MOPAR® or equivalent is recommended. Do not use oven cleaner. Avoid automatic car washes that use acidic solutions or harsh brushes that may damage the wheels' protective finish.

Stain Repel Fabric Cleaning Procedure – If Equipped

Stain Repel seats may be cleaned in the following manner:

- Remove as much of the stain as possible by blotting with a clean, dry towel.
- Blot any remaining stain with a clean, damp towel.
- For tough stains, apply MOPAR® Total Clean or equivalent, or a mild soap solution to a clean, damp cloth and remove stain. Use a fresh, damp towel to remove soap residue.
- For grease stains, apply MOPAR® Multi-Purpose Cleaner or equivalent to a clean, damp cloth and remove stain. Use a fresh, damp towel to remove soap residue.
- Do not use any harsh solvents or any other form of protectants on Stain Repel products.

Interior Care

Use MOPAR® Total Clean or equivalent to clean fabric upholstery and carpeting.

Use MOPAR® Total Clean or equivalent to clean vinyl upholstery.

MOPAR® Total Clean or equivalent is specifically recommended for leather upholstery.

Your leather upholstery can be best preserved by regular cleaning with a damp soft cloth. Small particles of dirt can act as an abrasive and damage the leather upholstery and should be removed promptly with a damp cloth. Stubborn soils can be removed easily with a soft cloth and MOPAR® Total Clean or equivalent. Care should be taken to avoid soaking your leather upholstery with any liquid. Please do not use polishes, oils, cleaning fluids, solvents, detergents, or ammonia-based cleaners to clean your leather upholstery. Application of a leather conditioner is not required to maintain the original condition.

WARNING!

Do not use volatile solvents for cleaning purposes. Many are potentially flammable, and if used in closed areas they may cause respiratory harm.

Cleaning Headlights

Your vehicle is equipped with plastic headlights and fog lights (if equipped) that are lighter and less susceptible to stone breakage than glass headlights.

Plastic is not as scratch resistant as glass and therefore different lens cleaning procedures must be followed.

To minimize the possibility of scratching the lenses and reducing light output, avoid wiping with a dry cloth. To remove road dirt, wash with a mild soap solution followed by rinsing.

Do not use abrasive cleaning components, solvents, steel wool or other aggressive material to clean the lenses.

Glass Surfaces

All glass surfaces should be cleaned on a regular basis with MOPAR® Glass Cleaner or any commercial household-type glass cleaner. Never use an abrasive type

cleaner. Use caution when cleaning the inside rear window equipped with electric defrosters or the right rear quarter window equipped with the radio antenna. Do not use scrapers or other sharp instruments which may scratch the elements. When cleaning the rearview mirror, spray cleaner on the towel or rag that you are using. Do not spray cleaner directly on the mirror.

Cleaning Plastic Instrument Cluster Lenses

The lenses in front of the instruments in this vehicle are molded in clear plastic. When cleaning the lenses, care must be taken to avoid scratching the plastic.

1. Clean with a wet soft rag. A mild soap solution may be used, but do not use high alcohol content or abrasive cleaners. If soap is used, wipe clean with a clean damp rag.
2. Dry with a soft cloth.

Seat Belt Maintenance

Do not bleach, dye or clean the belts with chemical solvents or abrasive cleaners. This will weaken the fabric. Sun damage can also weaken the fabric.

If the belts need cleaning, use a mild soap solution or lukewarm water. Do not remove the belts from the car to wash them. Dry with a soft cloth.

Replace the belts if they appear frayed or worn or if the buckles do not work properly.

Spray-On Bedliner – If Equipped

During ownership, the shine and luster of the Spray-On Bedliner can fade from oxidation, road dirt, heavy-duty hauling and hard water stains. Weathering and UV exposure will lead to fading, dulling, and loss of gloss over time.

To help maintain the appearance of your Spray-On Bedliner, the manufacturer recommends you periodically rinse all loose dirt from your truck bed and clean your truck at least twice per year using the MOPAR® Spray-On Bedliner Conditioner available at your local authorized dealer.

To help maintain the appearance of your Spray-On Bedliner, follow the steps below:

1. Rinse your truck bed out with water to remove any loose dirt and debris.

2. Mix a mild soap or detergent with water with a soft cloth or brush.

3. Rinse bedliner with water.

4. Once dry, apply a small amount of MOPAR® Spray-On Bedliner Conditioner to a moist towel or sponge and wipe over the entire surface of the truck bedliner.

WARNING!

Do not use silicon-based protection products to clean your bedliner. Silicon-based products can become slippery and may result in personal injury.

Spray-On Bedliners are chemically-resistant to many different types of chemicals (including gasoline, oil, hydraulic fluids) for short periods of time. If a spill occurs on your Spray-On Bedliner, rinse the truck out as soon as possible to avoid permanent damage.

Repairing the Spray-On Bedliner

While extremely tough, it is possible to damage a Spray-On Bedliner. One common condition is when loading a heavy pallet and dragging that pallet across the floor of the bed. If a nail or sharp point is exposed under the weight of the pallet a scratch or tear is possible. While not covered by your new vehicle warranty, a cosmetic fix

to cover the metal exposed by the scratch is required. To repair a tear or gouge, follow the directions provided in the MOPAR® Quick Repair Kit.

FUSES

Totally Integrated Power Module

The Totally Integrated Power Module is located in the engine compartment near the battery. This center contains cartridge fuses and mini fuses. A description of each fuse and component may be stamped on the inside cover, otherwise the cavity number of each fuse is stamped on the inside cover that corresponds to the following chart.

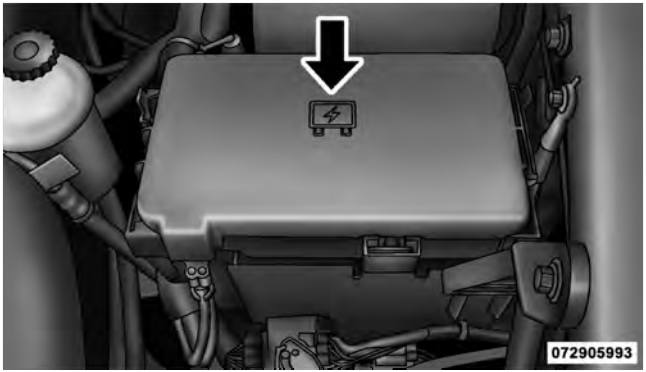

Totally Integrated Power Module

Cavity	Cartridge Fuse	Mini Fuse	Description
J01	40 Amp Green		Trailer Tow
J02	30 Amp Pink		Electric Brake

Cavity	Cartridge Fuse	Mini Fuse	Description
J03	30 Amp Pink		Diesel Powertrain Control Module – If Equipped
J04	25 Amp Natural		Driver Door Node
J05	25 Amp Natural		Passenger Door Node
J06	40 Amp Green		Antilock Brakes Pump/Stability Control System
J07	30 Amp Pink		Antilock Brakes Valve/Stability Control System
J08	40 Amp Green		Power Seat
J11	30 Amp Pink		Drivetrain Control Module

Cavity	Cartridge Fuse	Mini Fuse	Description
J13	60 Amp Yellow		Main Ignition Off Draw (IOD) Fuse
J14	20 Amp Blue		Trailer Tow Lamps/Park Lamps
J15	30 Amp Pink		Rear Defroster
J17	40 Amp Green		Starter Motor Solenoid
J18	20 Amp Blue		Powertrain Control Module Transmission Range
J19	60 Amp Yellow		Rad Fan Motor HI/ Rad Fan Motor Low
J20	30 Amp Pink		Front Wiper Ground/Low/High

Cavity	Cartridge Fuse	Mini Fuse	Description
J21	20 Amp Blue		Front Washer Control
J22	25 Amp Natural		Sunroof Module
M1		15 Amp Blue	Stop Switch Lamp
M5		25 Amp Natural	115V AC Inverter
M6		20 Amp Yellow	Power Outlet #1 (Cigar Lighter)/ Rain Snsr
M7		20 Amp Yellow	Power Outlet #2
M8		20 Amp Yellow	Front Heated Seat & Steering Wheel
M9		20 Amp Yellow	Rear Heated Seats

Cavity	Cartridge Fuse	Mini Fuse	Description
M10		20 Amp Yellow	Hands Free Module/Vanity Lamp/Universal Garage Door Opener Module
M11		10 Amp Red	Climate Control System
M12		30 Amp Green	Radio/Amplifier
M13		20 Amp Yellow	Main #2 Instrument Cluster/Wireless Control Module/ ITM/Siren/ Multifunction Switch (Steering Column Module)

Cavity	Cartridge Fuse	Mini Fuse	Description
M14		20 Amp Yellow	Back Up Camera (Domestic Only)
M15		20 Amp Yellow	Power Seat Module(s)/Audio Telematics/Daytime Running Lights Relay/Instrument Cluster/Transfer Case Module
M16		10 Amp Red	Airbag Module
M19		25 Amp Natural	Automatic Shut-down 1 and 2
M20		15 Amp Blue	Instrument Cluster Interior Lighting /Sw Steering Wheel/Sw Bank

Cavity	Cartridge Fuse	Mini Fuse	Description
M21		20 Amp Yellow	Automatic Shut-down 3
M22		10 Amp Red	Horns (Low/High) – Right
M23		10 Amp Red	Horns (Low/High) – Left
M25		20 Amp Yellow	Fuel Pump Motor/ Diesel Lift Pump – If Equipped
M26		10 Amp Red	Spare
M27		10 Amp Red	Ignition Switch
M28		15 Amp Blue	Powertrain Control Module
M29		10 Amp Red	Tire Pressure Moni-tor

Cavity	Cartridge Fuse	Mini Fuse	Description
M30		15 Amp Blue	J1962 Diag Connector
M32		10 Amp Red	Airbag Module
M33		10 Amp Red	Powertrain Control Module
M34		10 Amp Red	Park Assist Module/Climate Control System Module/IR Sensor/Compass Module
M35		15 Amp Blue	Left Front & Rear Parklamps
M36		20 Amp Yellow	Power Outlet
M37		10 Amp Red	Antilock Brakes/Stability Control System Module/Stoplamp Switch
M38		25 Amp Natural	All Door Lock &Unlock

CAUTION!

- **When installing the totally integrated power module cover, it is important to ensure the cover is properly positioned and fully latched. Failure to do so may allow water to get into the totally integrated power module and possibly result in a electrical system failure.**

(Continued)

CAUTION! (Continued)

- **When replacing a blown fuse, it is important to use only a fuse having the correct amperage rating. The use of a fuse with a rating other than indicated may result in a dangerous electrical system overload. If a properly rated fuse continues to blow, it indicates a problem in the circuit that must be corrected.**

VEHICLE STORAGE

If you are storing your vehicle for more than 21 days, we recommend that you take the following steps to minimize the drain on your vehicle's battery:

- Disconnect the Ignition-Off Draw (IOD) fuse located in the Integrated Power Module, located in the engine compartment. The IOD cavity includes a snap-in retainer that allows the fuse to be disconnected without removing it from the fuse block.
- As an alternative to the above steps you may disconnect the negative cables from both batteries.
- Any time you store your vehicle or keep it out of service (i.e., vacation) for two weeks or more, run the air conditioning system at idle for about five minutes in the fresh air and high blower setting. This will ensure adequate system lubrication to minimize the possibility of compressor damage when the system is started again.

NOTE:

- When reinstalling the IOD fuse push firmly until fully seated; the gauges in the instrument cluster will do a full sweep when the ignition switch is turned to the RUN position. This is a normal condition.
- When the vehicle is shipped from the factory, the IOD fuse is in the up or extracted position. If the radio, interior lamps, keyless entry or other features do not work with the key OFF, check the position of the fuse

(or check to see if the fuse is blown) to ensure that it is fully seated. When the IOD fuse is extracted, the instrument cluster in the odometer window will display "NO FUSE."

REPLACEMENT BULBS

LIGHT BULBS – Interior	Bulb No.
Overhead Console Lamps	TS 212-2
Dome Lamp	7679

NOTE: For lighted switches, see your authorized dealer for replacement instructions.

All of the inside bulbs are brass or glass-wedge base. Aluminum base bulbs are not approved.

LIGHT BULBS – Exterior	Bulb No.
Backup Lamp	921
Center High Mounted Stop Lamp (CHMSL)	921
Fog Lamp	9145
Dual Headlamp	H13
Quad Headlamp – Low Beam	H11
Quad Headlamp – High Beam	9005
Front Turn Signal Lamp (Dual Headlamp)	3157K
Front Turn Signal Lamp (Quad Headlamp)	3157NA
Rear License Plate Lamp	194
Rear Cargo Lamp	921
Rear Tail/Turn and Stop Lamp	3157K
Cab Roof Marker Lamps	194NA
Rear Lamp Bar ID Marker Lamp	194
Side Marker Lamps (Dual Rear Wheels)	194

BULB REPLACEMENT

Dual Or Quad Headlamp/Front Park And Turn Signal — If Equipped

1. Open the hood.

2. Disconnect and isolate the negative battery cable.

3. Remove the four plastic push-in fasteners that secure the upper radiator seal to the grille support and both fender ledges.

4. Remove the two plastic push-in rivets that secure the upper radiator seal to the radiator.

5. Remove the upper radiator seal from the vehicle.

6. Remove the two headlamp assembly attachment screws.

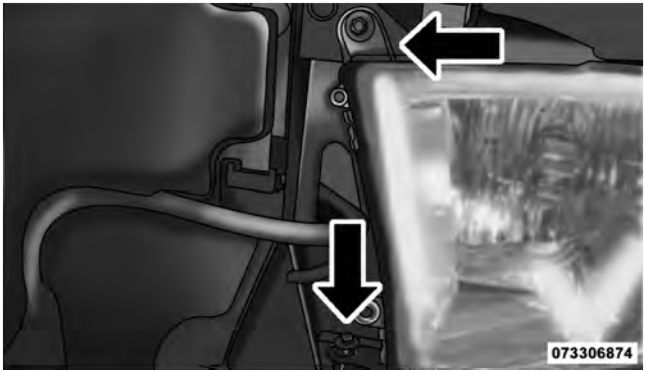

7. Reach into the front wheel house ahead of the front wheel, remove the fastener, and lift the cover over the access hole in the front of the wheel house splash shield. Access to the rear of the lamp can be gained through this access hole.

8. Reach through the access hole of the wheel house splash shield and lift the slide lock upward far enough to disengage it from the lock post on the back of the front lamp unit housing.

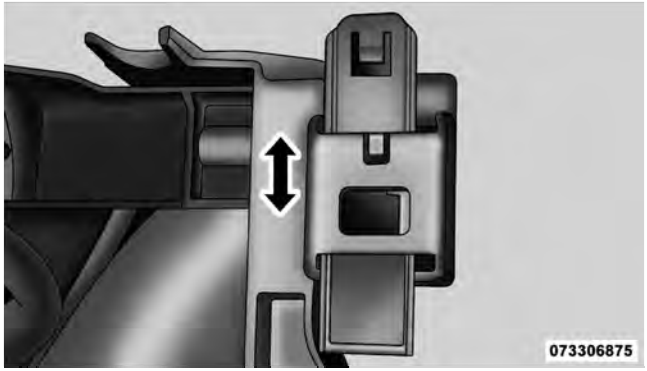

9. Remove the headlamp assembly. Grasp the outboard edge of the lamp and pull it straight forward to disengage the ball stud from the plastic grommet.

10. Disconnect the wiring harness connectors from the bulb socket.

11. Replace bulb(s) as necessary.

CAUTION!

- **Do not contaminate the bulb glass by touching it with your fingers or by allowing it to contact other oily surfaces. Shortened bulb life will result.**
- **Always use the correct bulb size and type for replacement. An incorrect bulb size or type may overheat and cause damage to the lamp, the bulb socket, or the lamp wiring.**

NOTE: There are access covers over both headlamp bulb access holes in the quad front lamp unit housing (if equipped). These covers MUST be reinstalled after the bulb has been replaced.

Fog Lamps

1. Reach under and behind the front bumper to access the back of the front fog lamp housing.

2. Disconnect the fog lamp wiring harness connector from the fog lamp bulb.

3. Rotate the bulb counterclockwise ¼ turn to unlock the bulb from the housing.

4. Pull the bulb straight out from the housing.

CAUTION!

Do not contaminate the bulb glass by touching it with your fingers or by allowing it to contact other oily surfaces. Shortened bulb life will result.

Rear Tail/Stop, Turn Signal And Backup Lamps

1. Remove the two screws that pass through the bed sheetmetal.

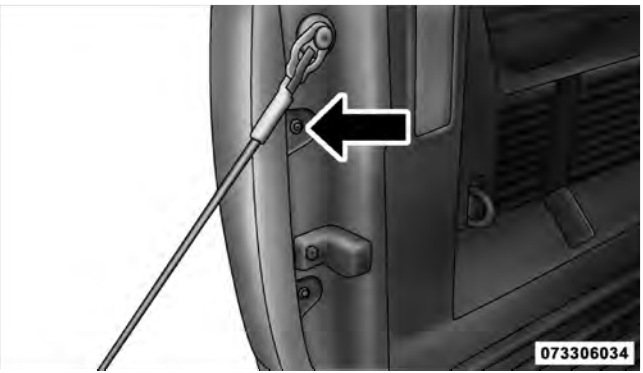

2. Pull the outboard side of the lamp rearward far enough to unsnap the two receptacles on the outboard side of the lamp housing from the two plastic snap post retainers in the outer box side panel.

3. Disconnect the wiring harness connectors from the bulb socket.

4. Rotate the bulb socket counterclockwise 1/4 turn to unlock it from the housing.

5. Pull the bulb straight out of the socket.

CAUTION!

Do not contaminate the bulb glass by touching it with your fingers or by allowing it to contact other oily surfaces. Shortened bulb life will result.

6. Reverse the procedure to install the bulb and housing.

Center High-Mounted Stoplamp (CHMSL) With Cargo Lamp

1. Remove the two screws holding the housing/lens to the body as shown.

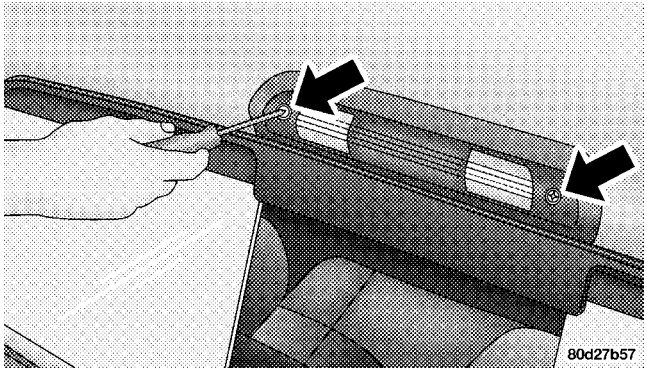

2. Separate the connector holding the housing and wiring harness to the body.

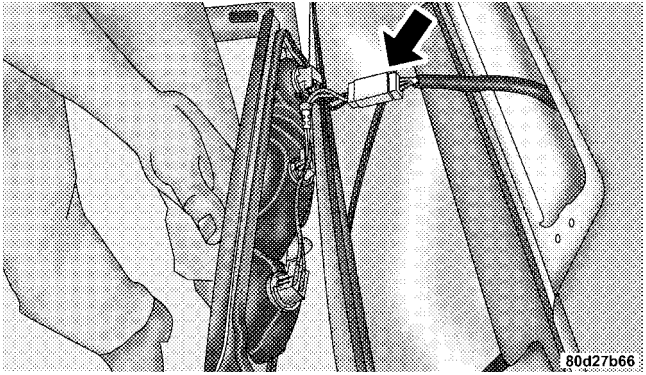

3. Turn the desired bulb socket ¼ turn and remove the socket and bulb from housing.

4. Pull the desired bulb straight from the socket.

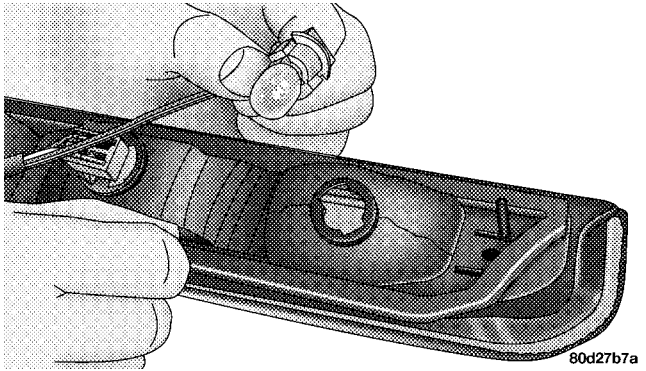

CAUTION!

Do not contaminate the bulb glass by touching it with your fingers or by allowing it to contact other oily surfaces. Shortened bulb life will result.

- Outside Bulbs: Cargo Lamps
- Inside Bulb: Center High-Mounted Stop Lamp

5. Reverse the procedure for installation of bulbs and housing.

Cab Top Clearance Lamps — If Equipped

1. Remove the two screws from the top of the lamp.

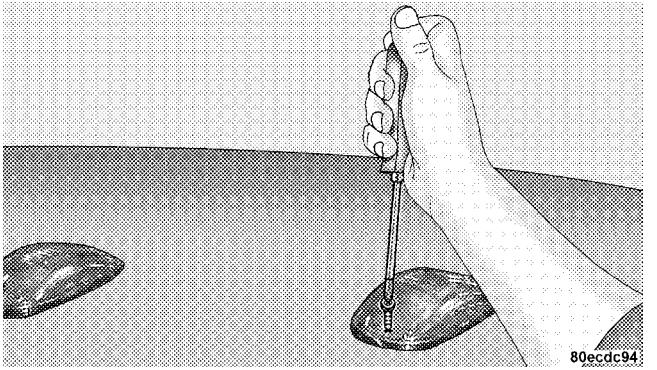

2. Rotate the socket ¼ turn and pull it from the lamp assembly.

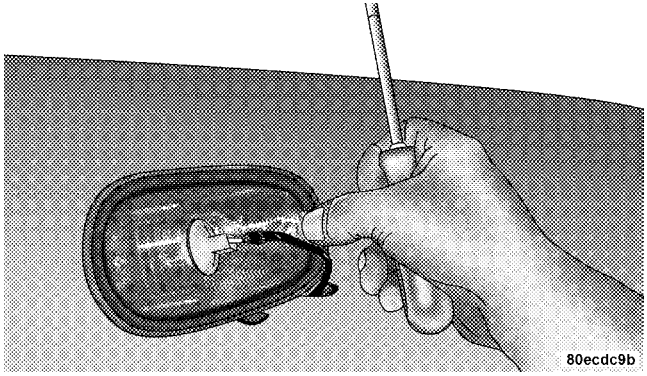

3. Pull the bulb straight from it's socket and replace.

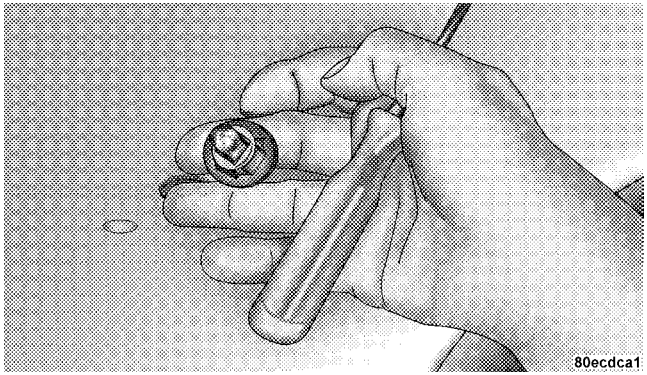

Rear Lamp Bar ID Marker (Dual Rear Wheels) — If Equipped

1. Loosen the two screws and the housing to gain access to the bulb sockets.

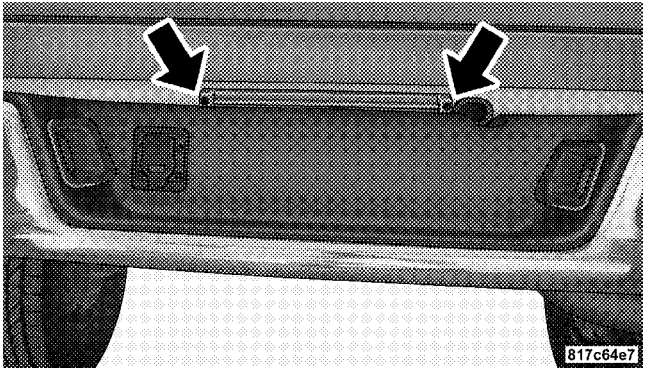

2. Turn the socket ¼ turn counterclockwise to access the bulb.

3. Pull the bulb straight out from the socket.

4. Reverse the procedure for installation of the bulbs and housing.

Side Marker Lamps (Dual Rear Wheels) — If Equipped

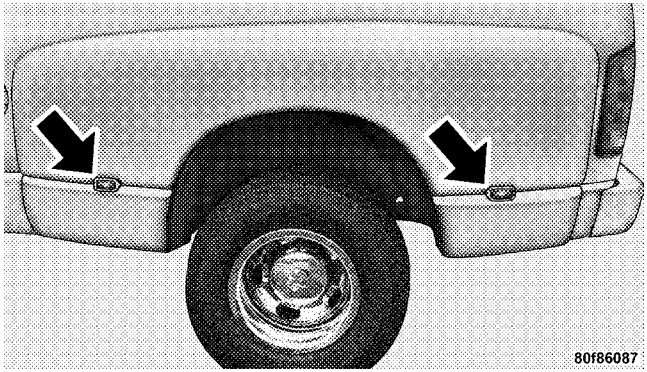

1. Push rearward on the side marker lamp assembly.
2. Pull the entire assembly from the fender.
3. Turn the socket ¼ turn counterclockwise and remove from assembly to access the bulb.
4. Pull the bulb straight out from socket.
5. Reverse the procedure for installation of the bulbs and housing.

FLUID CAPACITIES

	U.S.	Metric
Fuel (Approximate)		
1500 Regular Cab Shortbed/Crew Quad Cab Models	26 Gallons	98 Liters
1500 Regular Cab Longbed/Crew Quad Cab Models (Optional)	32 Gallons	121 Liters
2500/3500 Shortbed Models	34 Gallons	129 Liters
2500/3500 Longbed Models	35 Gallons	132 Liters
Engine Oil with Filter		
3.7L Engine (SAE 5W-20, API Certified)	5 Quarts	4.7 Liters
4.7L Engine (SAE 5W-20, API Certified)	6 Quarts	5.7 Liters
5.7L Engine (SAE 5W-20, API Certified)	7 Quarts	6.6 Liters
5.7L Engine (SAE 5W-30, API Certified). For 2500/3500 trucks operating under a gross combined weight rating **greater** than 14,000 lbs (6 350 kg).	7 Quarts	6.6 Liters

	U.S.	Metric
Cooling System		
3.7L Engine (MOPAR® Antifreeze/Coolant 5 Year/100,000 Mile Formula or equivalent)	14 Quarts	13 Liters
4.7L Engine (MOPAR® Antifreeze/Coolant 5 Year/100,000 Mile Formula or equivalent)	14 Quarts	13 Liters
5.7L Engine — 1500 Models (MOPAR® Antifreeze/Coolant 5 Year/100,000 Mile Formula or equivalent)	16 Quarts	15 Liters
5.7L Engine — 2500/3500 Models (MOPAR® Antifreeze/Coolant 5 Year/100,000 Mile Formula or equivalent)	18.7 Quarts	17.7 Liters
5.7L Engine — 2500/3500 Models w/Heavy Duty (MOPAR® Antifreeze/Coolant 5 Year/100,000 Mile Formula or equivalent)	19.2 Quarts	18.2 Liters

FLUIDS, LUBRICANTS AND GENUINE PARTS

Engine

Component	Fluid, Lubricant, or Genuine Part
Engine Coolant	MOPAR® Antifreeze/Coolant 5 Year/100,000 Mile Formula HOAT (Hybrid Organic Additive Technology) or equivalent.
Engine Oil	Use API Certified SAE 5W-20 Engine Oil, meeting the requirements of Chrysler Material Standard MS-6395. Refer to your engine oil filler cap for correct SAE grade.
Engine Oil – For 2500/3500 trucks operating under a gross combined weight rating **greater** than 14,000 lbs/(6,350 kg.)	Use API Certified SAE 5W-30 Engine Oil, meeting the requirements of Chrysler Material Standard MS-6395. Refer to your engine oil filler cap for correct SAE grade.
Engine Oil Filter	MOPAR® Engine Oil Filter or equivalent.
Spark Plugs – 3.7L Engine	ZFR6F-11G (Gap 0.043 in [1.1 mm])
Spark Plugs – 4.7L Engine	Upper Bank — FR8TE2 (Gap 0.039 in [.99 mm]) Lower Bank — FR8T1332 (Gap 0.051 in [1.30 mm])
Spark Plugs – 5.7L Engine	LZFR5C–11 (Gap 0.043 in [1.1 mm])
Fuel Selection – 3.7L and 4.7L Engines	87 Octane
Fuel Selection – 5.7L Engine	87 Octane Acceptable - 89 Octane Recommended

Chassis

Component	Fluid, Lubricant, or Genuine Part
Automatic Transmission	MOPAR® ATF+4® Automatic Transmission Fluid or equivalent licensed ATF+4® product.
Transfer Case	MOPAR® ATF+4® Automatic Transmission Fluid or equivalent licensed ATF+4® product.
Transfer Case – BW44–44 Only	MOPAR® BW44–44 Transfer Case Fluid or equivalent.
Front Axle – 1500 Four-Wheel Drive Models	GL-5 SAE 75W-90 (MS-9763) or equivalent.
Rear Axle – 1500 Models	MOPAR® Synthetic Gear Lubricant SAE 75W-140 (MS-8985). Limited-Slip Rear Axles require the addition of 118 ml (4 oz.) MOPAR® Limited Slip Additive or equivalent.
Front and Rear Axle – 2500/3500 Models	Synthetic, GL-5 SAE, 75W-90 or equivalent. Limited-Slip 10.5/11.5 inch Rear Axles **Limited slip additive is not required.**
Brake Master Cylinder	MOPAR® DOT 3 and SAE J1703 or equivalent. If DOT 3 brake fluid is not available, then DOT 4 is acceptable. Use only recommended brake fluids.
Power Steering Reservoir	MOPAR® Power Steering Fluid +4, MOPAR® ATF+4® Automatic Transmission Fluid or equivalent licensed ATF+4® product.

MAINTENANCE SCHEDULES

CONTENTS

■ Maintenance Schedule 586
□ Required Maintenance Intervals 588

MAINTENANCE SCHEDULE

The Scheduled Maintenance services listed in this manual must be done at the times or mileages specified to protect your vehicle warranty and ensure the best vehicle performance and reliability. More frequent maintenance may be needed for vehicles in severe operating conditions, such as dusty areas and very short trip driving. Inspection and service should also be done anytime a malfunction is suspected.

The oil change indicator system will remind you that it is time to take your vehicle in for scheduled maintenance.

On Electronic Vehicle Information Center (EVIC) equipped vehicles, "Oil Change Required" will be displayed in the EVIC and a single chime will sound, indicating that an oil change is necessary.

On Non-EVIC equipped vehicles, "Change Oil" will flash in the instrument cluster odometer and a single chime will sound, indicating that an oil change is necessary.

Based on engine operation conditions the oil change indicator message will illuminate. This means that service is required for your vehicle. Have your vehicle serviced as soon as possible, within the next 500 miles (805 km).

NOTE:

- The oil change indicator message will not monitor the time since the last oil change. Change your vehicle's oil if it has been six months since your last oil change even if the oil change indicator message is NOT illuminated.
- Change your engine oil more often if you drive your vehicle off-road for an extended period of time.
- Under no circumstances should oil change intervals exceed 8,000 miles (13 000 km) or six months, whichever comes first.

Your authorized dealer will reset the oil change indicator message after completing the scheduled oil change. If a scheduled oil change is performed by someone other than your authorized dealer, the message can be reset by referring to the steps described under "Electronic Vehicle Information Center (EVIC)/Oil Change Required" in "Understanding Your Instrument Panel" or under "Instrument Cluster Description/Odometer/Trip Odometer" in "Understanding Your Instrument Panel" for further information.

At Each Stop For Fuel

- Check the engine oil level about five minutes after a fully warmed engine is shut off. Checking the oil level while the vehicle is on level ground will improve the accuracy of the oil level reading. Add oil only when the level is at or below the ADD or MIN mark.
- Check the windshield washer solvent and add if required.

Once A Month

- Check tire pressure and look for unusual wear or damage.
- Inspect the battery and clean and tighten the terminals as required.
- Check the fluid levels of the coolant reservoir, brake master cylinder, and transmission and add as needed.
- Check all lights and other electrical items for correct operation.

At Each Oil Change

- Change the engine oil filter.
- Inspect the brake hoses and lines.

CAUTION!

Failure to perform the required maintenance items may result in damage to the vehicle.

Required Maintenance Intervals

NOTE: ** Vehicles built with the 4.7L engine are equipped with sixteen spark plugs. One set is located on the top of the engine under the coils and the second set is located on the side of the engine.

The spark plugs located under the coils are a standard plug and must be changed every 48,000 miles (78 000 km).

The spark plugs located on the side of the engine are a premium plug and must be changed every 96,000 miles (156 000 km).

8,000 Miles (13,000 km) or 6 Months Maintenance Service Schedule

- ❏ Change the engine oil and engine oil filter.
- ❏ Rotate the tires, rotate at the first sign of irregular wear, even if it occurs before 8,000 miles (13 000 km).
- ❏ Lube the front drive shaft fitting (2500/3500 (4x4) models only).

Odometer Reading Date

Repair Order # Dealer Code

Signature, Authorized Service Center

16,000 Miles (26,000 km) or 12 Months Maintenance Service Schedule

- ❏ Change the engine oil and engine oil filter.
- ❏ Rotate the tires, rotate at the first sign of irregular wear, even if it occurs before 16,000 miles (26 000 km).
- ❏ If using your vehicle for any of the following: Dusty or off-road conditions. Inspect the engine air cleaner filter; replace if necessary.
- ❏ Lube the front drive shaft fitting (2500/3500 (4x4) models only).
- ❏ Inspect the brake linings, replace if necessary.
- ❏ Inspect exhaust system. Perform the first inspection at 16,000 miles (26 000 km) or 12 months.
- ❏ Inspect the front suspension, tie rod ends and boot seals for cracks or leaks and all parts for damage, wear, improper looseness or end play; replace if necessary.

Odometer Reading Date

Repair Order # Dealer Code

Signature, Authorized Service Center

24,000 Miles (39,000 km) or 18 Months Maintenance Service Schedule

- ❏ Change the engine oil and engine oil filter.
- ❏ Rotate the tires, rotate at the first sign of irregular wear, even if it occurs before 24,000 miles (39 000 km).
- ❏ Lube the front drive shaft fitting (2500/3500 (4x4) models only).
- ❏ Inspect the CV joints.
- ❏ Inspect exhaust system.
- ❏ Inspect the front and rear axle fluid, change if using your vehicle for police, taxi, fleet, off-road or frequent trailer towing.

Odometer Reading Date

Repair Order # Dealer Code

Signature, Authorized Service Center

32,000 Miles (52,000 km) or 24 Months Maintenance Service Schedule

- ❏ Change the engine oil and engine oil filter.
- ❏ Rotate the tires, rotate at the first sign of irregular wear, even if it occurs before 32,000 miles (52 000 km).
- ❏ Replace the engine air cleaner filter.
- ❏ Replace the spark plugs (3.7L and 5.7L Engines).
- ❏ Lube the front drive shaft fitting (2500/3500 (4x4) models only).
- ❏ Adjust parking brake on vehicles equipped with four-wheel disc brakes.
- ❏ Inspect the transfer case fluid.
- ❏ Inspect the brake linings, replace if necessary.
- ❏ Inspect the front suspension, tie rod ends and boot seals for cracks or leaks and all parts for damage, wear, improper looseness or end play; replace if necessary.

Odometer Reading Date

Repair Order # Dealer Code

Signature, Authorized Service Center

40,000 Miles (65,000 km) or 30 Months Maintenance Service Schedule

- ❏ Change the engine oil and engine oil filter.
- ❏ Rotate the tires, rotate at the first sign of irregular wear, even if it occurs before 40,000 miles (65 000 km).
- ❏ Lube the front drive shaft fitting (2500/3500 (4x4) models only).

Odometer Reading Date

Repair Order # Dealer Code

Signature, Authorized Service Center

48,000 Miles (78,000 km) or 36 Months Maintenance Service Schedule

- ❏ Change the engine oil and engine oil filter.
- ❏ Rotate the tires, rotate at the first sign of irregular wear, even if it occurs before 48,000 miles (78 000 km).
- ❏ If using your vehicle for any of the following: Dusty or off-road conditions. Inspect the engine air cleaner filter; replace if necessary.
- ❏ Replace the top row of spark plugs (4.7L Engine).**
- ❏ Lube the front drive shaft fitting (2500/3500 (4x4) models only).
- ❏ Inspect the brake linings, replace if necessary.
- ❏ Inspect the CV joints.
- ❏ Inspect exhaust system.
- ❏ Inspect the front suspension, tie rod ends and boot seals for cracks or leaks and all parts for damage, wear, improper looseness or end play; replace if necessary.
- ❏ Inspect the front and rear axle fluid, change if using your vehicle for police, taxi, fleet, off-road or frequent trailer towing.

Odometer Reading Date

Repair Order # Dealer Code

Signature, Authorized Service Center

56,000 Miles (91,000 km) or 42 Months Maintenance Service Schedule

- ❏ Change the engine oil and engine oil filter.
- ❏ Rotate the tires, rotate at the first sign of irregular wear, even if it occurs before 56,000 miles (91 000 km).
- ❏ Lube the front drive shaft fitting (2500/3500 (4x4) models only).

Odometer Reading Date

Repair Order # Dealer Code

Signature, Authorized Service Center

64,000 Miles (104,000 km) or 48 Months Maintenance Service Schedule

- ❑ Change the engine oil and engine oil filter.
- ❑ Rotate the tires, rotate at the first sign of irregular wear, even if it occurs before 64,000 miles (104 000 km).
- ❑ Replace the engine air cleaner filter.
- ❑ Replace the ignition cables (3.7L Engine).
- ❑ Replace the spark plugs (3.7L and 5.7L Engines).
- ❑ Lube the front drive shaft fitting (2500/3500 (4x4) models only).
- ❑ Inspect the brake linings; replace if necessary.
- ❑ Adjust parking brake on vehicles equipped with four-wheel disc brakes.
- ❑ Change the automatic transmission fluid and filter(s) if using your vehicle for any of the following: police, taxi, fleet, or frequent trailer towing.
- ❑ Change the transfer case fluid if using your vehicle for any of the following: police, taxi, fleet, or frequent trailer towing.
- ❑ Inspect the front suspension, tie rod ends and boot seals for cracks or leaks and all parts for damage, wear, improper looseness or end play; replace if necessary.

Odometer Reading Date

Repair Order # Dealer Code

Signature, Authorized Service Center

72,000 Miles (117,000 km) or 54 Months Maintenance Service Schedule

- ❏ Change the engine oil and engine oil filter.
- ❏ Rotate the tires, rotate at the first sign of irregular wear, even if it occurs before 72,000 miles (117 000 km).
- ❏ Lube the front drive shaft fitting (2500/3500 (4x4) models only).
- ❏ Inspect the CV joints.
- ❏ Inspect exhaust system.
- ❏ Inspect the front and rear axle fluid, change if using your vehicle for police, taxi, fleet, off-road or frequent trailer towing.

Odometer Reading Date

Repair Order # Dealer Code

Signature, Authorized Service Center

80,000 Miles (130,000 km) or 60 Months Maintenance Service Schedule

- ❏ Change the engine oil and engine oil filter.
- ❏ Rotate the tires, rotate at the first sign of irregular wear, even if it occurs before 80,000 miles (130 000 km).
- ❏ If using your vehicle for any of the following: Dusty or off-road conditions. Inspect the engine air cleaner filter; replace if necessary.
- ❏ Lube the front drive shaft fitting (2500/3500 (4x4) models only).
- ❏ Flush and replace the engine coolant if not done at 104,000 miles (169 000 km).
- ❏ Inspect the brake linings, replace if necessary.
- ❏ Inspect the front suspension, tie rod ends and boot seals for cracks or leaks and all parts for damage, wear, improper looseness or end play; replace if necessary.

Odometer Reading Date

Repair Order # Dealer Code

Signature, Authorized Service Center

88,000 Miles (143,000 km) or 66 Months Maintenance Service Schedule

- ❏ Change the engine oil and engine oil filter.
- ❏ Rotate the tires, rotate at the first sign of irregular wear, even if it occurs before 88,000 miles (143 000 km).
- ❏ Lube the front drive shaft fitting (2500/3500 (4x4) models only).

Odometer Reading Date

Repair Order # Dealer Code

Signature, Authorized Service Center

96,000 Miles (156,000 km) or 72 Months Maintenance Service Schedule

- ❏ Change the engine oil and engine oil filter.
- ❏ Rotate the tires, rotate at the first sign of irregular wear, even if it occurs before 96,000 miles (156 000 km).
- ❏ Replace the engine air cleaner filter.
- ❏ Replace the ignition cables (4.7L Engine).
- ❏ Replace the top row and side row of spark plugs (4.7L Engine).**
- ❏ Replace the spark plugs (3.7L and 5.7L Engines).
- ❏ Inspect and replace PCV valve if necessary.†
- ❏ Lube the front drive shaft fitting (2500/3500 (4x4) models only).
- ❏ Adjust parking brake on vehicles equipped with four-wheel disc brakes.
- ❏ Inspect the transfer case fluid.
- ❏ Inspect the brake linings, replace if necessary.
- ❏ Inspect the CV joints.
- ❏ Inspect exhaust system.
- ❏ Inspect the front suspension, tie rod ends and boot seals for cracks or leaks and all parts for damage, wear, improper looseness or end play; replace if necessary.
- ❏ Inspect the front and rear axle fluid, change if using your vehicle for police, taxi, fleet, off-road or frequent trailer towing.

_____
Odometer Reading Date

_____
Repair Order # Dealer Code

_____
Signature, Authorized Service Center

104,000 Miles (169,000 km) or 78 Months Maintenance Service Schedule

- ❏ Change the engine oil and engine oil filter.
- ❏ Rotate the tires, rotate at the first sign of irregular wear, even if it occurs before 104,000 miles (169 000 km).
- ❏ Lube the front drive shaft fitting (2500/3500 (4x4) models only).
- ❏ Flush and replace the engine coolant if not done at 60 months.

Odometer Reading Date

Repair Order # Dealer Code

Signature, Authorized Service Center

112,000 Miles (182,000 km) or 84 Months Maintenance Service Schedule

- ❏ Change the engine oil and engine oil filter.
- ❏ Rotate the tires, rotate at the first sign of irregular wear, even if it occurs before 112,000 miles (182 000 km).
- ❏ If using your vehicle for any of the following: Dusty or off-road conditions. Inspect the engine air cleaner filter; replace if necessary.
- ❏ Lube the front drive shaft fitting (2500/3500 (4x4) models only).
- ❏ Inspect the brake linings, replace if necessary.
- ❏ Inspect the front suspension, tie rod ends and boot seals for cracks or leaks and all parts for damage, wear, improper looseness or end play; replace if necessary.

Odometer Reading Date

Repair Order # Dealer Code

Signature, Authorized Service Center

120,000 Miles (195,000 km) or 90 Months Maintenance Service Schedule

- ❏ Change the engine oil and engine oil filter.
- ❏ Rotate the tires, rotate at the first sign of irregular wear, even if it occurs before 120,000 miles (195 000 km).
- ❏ Lube the front drive shaft fitting (2500/3500 (4x4) models only).
- ❏ Inspect the CV joints.
- ❏ Inspect exhaust system.
- ❏ Inspect the front and rear axle fluid, change if using your vehicle for police, taxi, fleet, off-road or frequent trailer towing.
- ❏ Change the automatic transmission fluid and filter(s).
- ❏ Replace the accessory drive belt(s).

Odometer Reading Date

Repair Order # Dealer Code

Signature, Authorized Service Center

128,000 Miles (208,000 km) or 96 Months Maintenance Service Schedule

- ❑ Change the engine oil and engine oil filter.
- ❑ Rotate the tires, rotate at the first sign of irregular wear, even if it occurs before 128,000 miles (208 000 km).
- ❑ Replace the engine air cleaner filter.
- ❑ Replace the ignition cables (3.7L Engine).
- ❑ Replace the spark plugs (3.7L and 5.7L Engines).
- ❑ Lube the front drive shaft fitting (2500/3500 (4x4) models only).
- ❑ Adjust parking brake on vehicles equipped with four-wheel disc brakes.
- ❑ Change the transfer case fluid.
- ❑ Inspect the brake linings, replace if necessary.
- ❑ Inspect the front suspension, tie rod ends and boot seals for cracks or leaks and all parts for damage, wear, improper looseness or end play; replace if necessary.

Odometer Reading Date

Repair Order # Dealer Code

Signature, Authorized Service Center

136,000 Miles (221,000 km) or 102 Months Maintenance Service Schedule

- ❑ Change the engine oil and engine oil filter.
- ❑ Rotate the tires, rotate at the first sign of irregular wear, even if it occurs before 136,000 miles (221 000 km).
- ❑ Lube the front drive shaft fitting (2500/3500 (4x4) models only).

Odometer Reading Date

Repair Order # Dealer Code

Signature, Authorized Service Center

144,000 Miles (234,000 km) or 108 Months Maintenance Service Schedule

- ❑ Change the engine oil and engine oil filter.
- ❑ Rotate the tires, rotate at the first sign of irregular wear, even if it occurs before 144,000 miles (234 000 km).
- ❑ If using your vehicle for any of the following: Dusty or off-road conditions. Inspect the engine air cleaner filter; replace if necessary.
- ❑ Replace the top row of spark plugs (4.7L Engine). **
- ❑ Lube the front drive shaft fitting (2500/3500 (4x4) models only).
- ❑ Inspect the brake linings, replace if necessary.
- ❑ Inspect the CV joints.
- ❑ Inspect exhaust system.
- ❑ Inspect the front suspension, tie rod ends and boot seals for cracks or leaks and all parts for damage, wear, improper looseness or end play; replace if necessary.
- ❑ Inspect the front and rear axle fluid, change if using your vehicle for police, taxi, fleet, off-road or frequent trailer towing.

Odometer Reading Date

Repair Order # Dealer Code

Signature, Authorized Service Center

152,000 Miles (247,000 km) or 114 Months Maintenance Service Schedule

- ❑ Change the engine oil and engine oil filter.
- ❑ Rotate the tires, rotate at the first sign of irregular wear, even if it occurs before 152,000 miles (247 000 km).
- ❑ Lube the front drive shaft fitting (2500/3500 (4x4) models only).

Odometer Reading Date

Repair Order # Dealer Code

Signature, Authorized Service Center

† This maintenance is recommended by the manufacturer to the owner, but is not required to maintain emissions warranty.

WARNING!

- **You can be badly injured working on or around a motor vehicle. Do only service work for which you have the knowledge and the right equipment. If you have any doubt about your ability to perform a service job, take your vehicle to a competent mechanic.**
- **Failure to properly inspect and maintain your vehicle could result in a component malfunction and effect vehicle handling and performance. This could cause an accident.**

IF YOU NEED CONSUMER ASSISTANCE

CONTENTS

- Suggestions For Obtaining Service For Your Vehicle 605
  - Prepare For The Appointment 605
  - Prepare A List 605
  - Be Reasonable With Requests 605
- If You Need Assistance 605
  - Chrysler Group LLC Customer Center 606
  - Chrysler Canada Inc. Customer Center 606
  - In Mexico Contact 606
  - Customer Assistance For The Hearing Or Speech Impaired (TDD/TTY) 607
  - Service Contract 607
- Warranty Information 608
- MOPAR® Parts 608
- Reporting Safety Defects 608
  - In The 50 United States And Washington, D.C. 608
  - In Canada 609
- Publication Order Forms 609

■ Department Of Transportation Uniform Tire Quality Grades 611
□ Treadwear 611
□ Traction Grades 611
□ Temperature Grades 612

SUGGESTIONS FOR OBTAINING SERVICE FOR YOUR VEHICLE

Prepare For The Appointment

If you're having warranty work done, be sure to have the right papers with you. Take your warranty folder. All work to be performed may not be covered by the warranty. Discuss additional charges with the service manager. Keep a maintenance log of your vehicle's service history. This can often provide a clue to the current problem.

Prepare A List

Make a written list of your vehicle's problems or the specific work you want done. If you've had an accident or work done that is not on your maintenance log, let the service advisor know.

Be Reasonable With Requests

If you list a number of items and you must have your vehicle by the end of the day, discuss the situation with the service advisor and list the items in order of priority. At many authorized dealers, you may obtain a rental vehicle at a minimal daily charge. If you need a rental, it is advisable to make these arrangements when you call for an appointment.

IF YOU NEED ASSISTANCE

The manufacturer and its authorized dealers are vitally interested in your satisfaction. We want you to be happy with our products and services.

Warranty service must be done by an authorized dealer. We strongly recommend that you take the vehicle to an authorized dealer. They know your vehicle the best, and are most concerned that you get prompt and high quality service. The manufacturer's authorized dealers have the facilities, factory-trained technicians, special tools, and the latest information to ensure the vehicle is fixed correctly and in a timely manner.

This is why you should always talk to an authorized dealer's service manager first. Most matters can be resolved with this process.

- If for some reason you are still not satisfied, talk to the general manager or owner of the authorized dealership. They want to know if you need assistance.
- If an authorized dealership is unable to resolve the concern, you may contact the manufacturer's customer center.

Any communication to the manufacturer's customer center should include the following information:

- Owner's name and address
- Owner's telephone number (home and office)
- Authorized dealership name
- Vehicle Identification Number (VIN)
- Vehicle delivery date and mileage

Chrysler Group LLC Customer Center
P.O. Box 21–8004
Auburn Hills, MI 48321–8004
Phone: (866) 726–4636

Chrysler Canada Inc. Customer Center
P.O. Box 1621
Windsor, Ontario N9A 4H6
Phone: (800) 465–2001 English / (800) 387–9983 French

In Mexico contact:
Av. Prolongacion Paseo de la Reforma, 1240
Sante Fe C.P. 05109
Mexico, D. F.
In Mexico City: 5081-7568
Outside Mexico City: 1-800-505-1300

Customer Assistance For The Hearing Or Speech Impaired (TDD/TTY)

To assist customers who have hearing difficulties, the manufacturer has installed special TDD (Telecommunication Devices for the Deaf) equipment at its customer center. Any hearing or speech impaired customer, who has access to a TDD or a conventional teletypewriter (TTY) in the United States, can communicate with the manufacturer by dialing 1–800–380–CHRY.

Canadian residents with hearing difficulties that require assistance can use the special needs relay service offered by Bell Canada. For TTY teletypewriter users, dial 711 and for Voice callers, dial 1 800 855-0511 to connect with a Bell Relay Service operator.

Service Contract

You may have purchased a service contract for a vehicle to help protect you from the high cost of unexpected repairs after the manufacturer's New Vehicle Limited Warranty expires. The manufacturer stands behind only the manufacturer's service contracts. If you purchased a manufacturer's service contract, you will receive Plan Provisions and an Owner Identification Card in the mail within three weeks of the vehicle delivery date. If you have any questions about the service contract, call the manufacturer's Service Contract National Customer Hotline at 1-800-521-9922 (Canadian residents, call (800) 465–2001 English / (800) 387–9983 French).

The manufacturer will not stand behind any service contract that is not the manufacturer's service contract. It is not responsible for any service contract other than the manufacturer's service contract. If you purchased a service contract that is not a manufacturer's service contract, and you require service after the manufacturer's New Vehicle Limited Warranty expires, please refer to the contract documents, and contact the person listed in those documents.

We appreciate that you have made a major investment when you purchased the vehicle. An authorized dealer has also made a major investment in facilities, tools, and training to assure that you are absolutely delighted with the ownership experience. You'll be pleased with their sincere efforts to resolve any warranty issues or related concerns.

WARNING!

Engine exhaust, some of its constituents, and certain vehicle components contain, or emit, chemicals known to the State of California to cause cancer and birth defects, or other reproductive harm. In addition, certain fluids contained in vehicles and certain products of component wear contain, or emit, chemicals known to the State of California to cause cancer and birth defects, or other reproductive harm.

WARRANTY INFORMATION

See the Warranty Information Booklet, located on the DVD, for the terms and provisions of Chrysler Group LLC warranties applicable to this vehicle and market.

MOPAR® PARTS

MOPAR® fluids, lubricants, parts, and accessories are available from an authorized dealer. They are recommended for your vehicle in order to help keep the vehicle operating at its best.

REPORTING SAFETY DEFECTS

In the 50 United States and Washington, D.C.

If you believe that your vehicle has a defect that could cause a crash or cause injury or death, you should immediately inform the National Highway Traffic Safety Administration (NHTSA) in addition to notifying the manufacturer.

If NHTSA receives similar complaints, it may open an investigation, and if it finds that a safety defect exists in a group of vehicles, it may order a recall and remedy campaign. However, NHTSA cannot become involved in individual problems between you, your authorized dealer, and the manufacturer.

To contact NHTSA, you may either call the Auto Safety Hotline toll free at 1–888–327–4236 (TTY: 1–800–424–9153), or go to http://www.safercar.gov; or write to: Administrator, NHTSA, 1200 New Jersey Avenue, SE., West Building, Washington, D.C. 20590. You can also obtain other information about motor vehicle safety from http://www.safercar.gov.

In Canada

If you believe that your vehicle has a safety defect, you should contact the Customer Service Department immediately. Canadian customers who wish to report a safety defect to the Canadian government should contact Transport Canada, Motor Vehicle Defect Investigations and Recalls at 1-800-333-0510 or go to http://www.tc.gc.ca/roadsafety/

PUBLICATION ORDER FORMS

To order the following manuals, you may use either the website or the phone numbers listed below. Visa, Mastercard, American Express, and Discover orders are accepted. If you prefer mailing your payment, please call for an order form.

NOTE: A street address is required when ordering manuals (no P.O. Boxes).

- *Service Manuals*

  These comprehensive Service Manuals provide the information that students and professional technicians need in diagnosing/troubleshooting, problem solving, maintaining, servicing, and repairing Chrysler Group LLC vehicles. A complete working knowledge of the vehicle, system, and/or components is written in straightforward language with illustrations, diagrams, and charts.

- *Diagnostic Procedure Manuals*

  Diagnostic Procedure Manuals are filled with diagrams, charts and detailed illustrations. These practical manuals make it easy for students and technicians to find and fix problems on computer-controlled vehicle systems and features. They show exactly how to find and correct problems the first time, using step-by-step troubleshooting and drivability procedures, proven diagnostic tests and a complete list of all tools and equipment.

- *Owner's Manuals*

  These Owner's Manuals have been prepared with the assistance of service and engineering specialists to acquaint you with specific Chrysler Group LLC vehicles. Included are starting, operating, emergency and maintenance procedures as well as specifications, capabilities and safety tips.

Call toll free at:

- **1–800–890–4038 (U.S.)**
- **1–800–387–1143 (Canada)**

Or

Visit us on the Worldwide Web at:

- **www.techauthority.com**

DEPARTMENT OF TRANSPORTATION UNIFORM TIRE QUALITY GRADES

The following tire grading categories were established by the National Highway Traffic Safety Administration. The specific grade rating assigned by the tire's manufacturer in each category is shown on the sidewall of the tires on your vehicle.

All passenger car tires must conform to Federal safety requirements in addition to these grades.

Treadwear

The Treadwear grade is a comparative rating, based on the wear rate of the tire when tested under controlled conditions on a specified government test course. For example, a tire graded 150 would wear one and one-half times as well on the government course as a tire graded 100. The relative performance of tires depends upon the actual conditions of their use, however, and may depart significantly from the norm due to variations in driving habits, service practices, and differences in road characteristics and climate.

Traction Grades

The Traction grades, from highest to lowest, are AA, A, B, and C. These grades represent the tire's ability to stop on wet pavement, as measured under controlled conditions on specified government test surfaces of asphalt and concrete. A tire marked C may have poor traction performance.

WARNING!

The traction grade assigned to this tire is based on straight-ahead braking traction tests, and does not include acceleration, cornering, hydroplaning, or peak traction characteristics.

Temperature Grades

The temperature grades are A (the highest), B, and C, representing the tire's resistance to the generation of heat and its ability to dissipate heat, when tested under controlled conditions on a specified indoor laboratory test wheel. Sustained high temperature can cause the material of the tire to degenerate and reduce tire life, and excessive temperature can lead to sudden tire failure. The grade C corresponds to a level of performance, which all passenger car tires must meet under the Federal Motor Vehicle Safety Standard No. 109. Grades B and A represent higher levels of performance on the laboratory test wheel, than the minimum required by law.

WARNING!

The temperature grade for this tire is established for a tire that is properly inflated and not overloaded. Excessive speed, under-inflation, or excessive loading, either separately or in combination, can cause heat buildup and possible tire failure.

INDEX

Adding Engine Coolant (Antifreeze) 546
Adding Fuel 452
Adjustable Pedals 133
Air Cleaner, Engine (Engine Air Cleaner Filter) . . . 536
Air Conditioner Maintenance 538
Air Conditioning 291
Air Conditioning Controls 291
Air Conditioning Refrigerant 538,539
Air Conditioning System 291,295,538
Air Conditioning, Operating Tips 302
Air Pressure, Tires 416,424
Airbag 53,62
Airbag Deployment 63
Airbag Light 61,65,83,224
Airbag Maintenance 64
Airbag, Side 59,62
Airbag, Window (Side Curtain) 56,59,62
Alarm (Security Alarm) 18
Alarm Light 214
Alarm System (Security Alarm) 18
Alarm, Panic 24
Alterations/Modifications, Vehicle 7
Antenna, Satellite Radio 271
Anti-Lock Brake System (ABS) 395
Anti-Lock Warning Light 225
Anti-Theft Security Alarm (Theft Alarm) 18
Anti-Theft System 18
Antifreeze (Engine Coolant) 545,580
    Disposal 547
Appearance Care 557
Ashtray 166
Auto Down Power Windows 35
Automatic Dimming Mirror 94
Automatic Door Locks 30
Automatic Headlights 123
Automatic Temperature Control (ATC) 295
Automatic Transmission 313
    Adding Fluid 556

Fluid and Filter Changes 557
Fluid Level Check 554,555,556
Fluid Type 554,583
Gear Ranges 314
Shifting 318
Special Additives 555
Torque Converter 318
Axle Fluid 553,583
Axle Lubrication (Axle Fluid) 553

B-Pillar Location 411
Back-Up Camera 147
Bar, Stabilizer/Sway System 344
Battery 536
Keyless Transmitter Replacement (RKE) 24
Saving Feature (Protection) 127
Belts, Seat 39,83
Body Builders Guide 6
Body Mechanism Lubrication 539
Brake Assist System 396
Brake Control System, Electronic 395
Brake Fluid 551,583
Brake System 394,550
Anti-Lock (ABS) 395
Fluid Check 551
Master Cylinder 551
Parking 392
Warning Light 219
Brake/Transmission Interlock 313
Break-In Recommendations, New Vehicle 81
Bulb Replacement 571
Bulbs, Light 85,570

Cab Top Clearance Lights 576
Calibration, Compass 241
Camera, Rear 147
Camper 198
Capacities, Fluid 580

Caps, Filler
Oil (Engine) 534
Power Steering 391
Radiator (Coolant Pressure) 547
Car Washes 558
Carbon Monoxide Warning 82,447
Cargo Light 126
Cellular Phone 101,290
Center High Mounted Stop Light 575
Center Lap Belts 48
Center Seat Storage Compartment 174
Certification Label 453
Chart, Tire Sizing 407
Check Engine Light
(Malfunction Indicator Light) 223,530
Checking Your Vehicle For Safety 82
Checks, Safety 82
Child Restraint 67,68
Child Restraint Tether Anchors 72,76
Child Seat 68,74
Cigar Lighter 166
Cleaning
Wheels 560
Climate Control 290
Clock 250,260
Cold Weather Operation 310
Compact Disc (CD) Maintenance 290
Compact Spare Tire 419
Compass 240
Compass Calibration 241
Compass Variance 241
Computer, Trip/Travel 237
Connector
UCI 274,280
Universal Consumer Interface (UCI) 274,280
Conserving Fuel 235,237
Console, Overhead 150
Contract, Service 607

Coolant Pressure Cap (Radiator Cap) 547
Cooling System 544
Adding Coolant (Antifreeze) 546
Coolant Capacity 580
Coolant Level 544,548
Disposal of Used Coolant 547
Drain, Flush, and Refill 544
Inspection 548
Points to Remember 549
Pressure Cap 547
Radiator Cap 547
Selection of Coolant (Antifreeze) 545,580,582
Cruise Control (Speed Control) 134
Cupholders 169
Customer Assistance 605

Data Recorder, Event 66
Daytime Running Lights 127
Dealer Service 531
Defroster, Rear Window 180
Defroster, Windshield 84,293,299
Delay (Intermittent) Wipers 130
Differential, Limited-Slip 365
Dipsticks
Automatic Transmission 556
Power Steering 391
Disabled Vehicle Towing 518
Disposal
Antifreeze (Engine Coolant) 547
Door Locks 29
Door Locks, Automatic 30
Door Opener, Garage 152
Driving
Off-Pavement 347
Off-Road 347
Through Flowing, Rising, or Shallow Standing Water 366
Driving to Achieve Maximum Fuel Economy 235

Dual Rear Wheels 429,507
DVD Player (Video Entertainment System™) 286

E-85 Fuel 448
Electric Rear Window Defrost 180
Electrical Power Outlets 162
Electronic Brake Control System 395
Anti-Lock Brake System 395
Brake Assist System 396
Electronic Stability Program 400
Traction Control System 396
Electronic Range Select (ERS) 318
Electronic Speed Control (Cruise Control) 134
Electronic Stability Program (ESP) 400
Electronic Vehicle Information Center
(EVIC) 147,227
Electronically Shifted Transfer Case 329,336
Emergency Brake 392
Emergency, In Case of
Freeing Vehicle When Stuck 514
Hazard Warning Flasher 491
Jump Starting 510
Tow Hooks 515
Emission Control System Maintenance 530
Engine 526,527,528
Air Cleaner 536
Block Heater 311
Break-In Recommendations 81
Compartment Identification 526,527,528
Coolant (Antifreeze) 582
Exhaust Gas Caution 82,447
Flooded, Starting 310
Fuel Requirements 580
Jump Starting 510
Multi-Displacement 392
Oil 533,580,582
Oil Filler Cap 534

Oil Selection 534,580
Oil Synthetic 535
Temperature Gauge 210
Enhanced Accident Response Feature 63
Entry System, Illuminated 19
Ethanol 444
Event Data Recorder 66
Exhaust Gas Caution 82,447
Exhaust System 82,541
Exterior Lighting 123
Exterior Lights 85

Filters
Air Cleaner 536
Engine Oil 535,582
Engine Oil Disposal 535
Flashers
Turn Signal 85,128,210
Flat Tire Stowage 509
Flexible Fuel Vehicles
Cruising Range 451
Engine Oil 450
Fuel Requirements 448,449
Maintenance 451
Replacement Parts 451
Starting 450
Flooded Engine Starting 310
Fluid Capacities 580
Fluid Leaks 86
Fluid Level Checks
Automatic Transmission 556
Brake 551
Power Steering 391
Fluid, Brake 583
Fluids, Lubricants and Genuine Parts 582
Fog Lights 124,225,573
Fold Flat Load Floor 181
Four Wheel Drive 325

Four-Way Hazard Flasher 491
Freeing A Stuck Vehicle 514
Front Axle (Differential) 553
Fuel 443
    Adding 452
    Conserving 235,237
    Ethanol 444
    Filler Cap (Gas Cap) 453
    Gauge 210
    Light 218
    Methanol 444
    Octane Rating 443,582
    Requirements 443,580
    Saver Mode 235,237
    Tank Capacity 580
Fuel Optimizer 235
Fuel Saver 235
Fuel System Caution 452
Fuel, Flexible 448
Fuses 564

Garage Door Opener (HomeLink®) 152
Gas Cap (Fuel Filler Cap) 453,529
Gasoline (Fuel) 443
    Conserving 235,237
Gasoline, Reformulated 444
Gauges
    Coolant Temperature 210
    Fuel 210
    Oil Pressure 214
    Speedometer 211
    Tachometer 210
    Voltmeter 219
Gear Ranges 314,321
Gear Select Lever Override 516
General Information 18,25,442
Glass Cleaning 561
Grocery Bag Retainer 179

Gross Axle Weight Rating 457
Gross Vehicle Weight Rating 456
Guide, Body Builders 6
GVWR 454

Hands-Free Phone (Uconnect™) 101
Hazard
Driving Through Flowing, Rising, or Shallow Standing Water 366
Hazard Warning Flasher 491
Head Restraints 114
Headlights 571
Automatic 123
Cleaning 561
High Beam 129
High Beam/Low Beam Select Switch 129
Lights On Reminder 127
Passing 128
Switch 123
Heated Mirrors 99,180
Heated Seats 104
Heater 291
Heater, Engine Block 311
High Beam/Low Beam Select (Dimmer) Switch . . 129
Hitches
Trailer Towing 460
Hoisting 510
HomeLink® (Garage Door Opener) Transmitter . . 152
Hood Release 120
Hub Caps 505

Ignition 14
Key 12,14
Ignition Key Removal 14
Illuminated Entry 19
Immobilizer (Sentry Key) 16
Infant Restraint 67,68
Inflation Pressure Tires 424

Information Center, Vehicle 227
Inside Rearview Mirror 93
Instrument Cluster 206,208,210
Instrument Panel and Controls 205
Instrument Panel Lens Cleaning 562
Integrated Power Module (Fuses) 564
Integrated Trailer Brake Controls 466
Interior Appearance Care 560
Interior Lights 125
Intermittent Wipers (Delay Wipers) 130
Introduction 4
Inverter Outlet (115V) 167

Jack Location 491
Jump Starting 510

Key-In Reminder 15
Key, Programming 17
Key, Replacement 17
Key, Sentry (Immobilizer) 16
Keyless Entry System 20
Keys 12

Lane Change and Turn Signals 128
Lane Change Assist 128
Lap Belts 48
Lap/Shoulder Belts 39
LATCH (Lower Anchors and Tether for
CHildren) 72
Latches 85
Leaks, Fluid 86
Life of Tires 422
Light Bulbs 85
Lights 85,121
Airbag 61,65,83,224
Alarm 214
Anti-Lock 225
Automatic Headlights 123

Brake Assist Warning 403
Brake Warning 219
Bulb Replacement 570,571
Cap Top Clearance 576
Cargo 126
Center Mounted Stop 575
Check Engine (Malfunction Indicator) 223
Courtesy/Reading 150
Daytime Running 127
Electronic Stability Program (ESP) Indicator . . 403
Exterior 85
Fog 124,225,573
Four-Wheel Drive Indicator 329
Hazard Warning Flasher 491
Headlights 123
High Beam 129,219
High Beam Indicator 219
High Beam/Low Beam Select 129
Illuminated Entry 19
Instrument Cluster 206,210
Interior 125,150
Lights On Reminder 127
Low Fuel 218
Oil Pressure 221
Passing 128
Seat Belt Reminder 226
Security Alarm (Theft Alarm) 214
Service 570,571
Side Marker 579
Theft Alarm (Security Alarm) 214
Tire Pressure Monitoring (TPMS) 221,430
Traction Control 403
Transfer Case 329
Turn Signal 85,128,571,573
Warning (Instrument Cluster Description) 206,210
Limited-Slip Differential 365,554
Loading Vehicle 453

Tires 411
Locks 29
Automatic Door 30
Child Protection 33
Door 29
Power Door 30
Low Tire Pressure System 430
Lower Anchors and Tether for CHildren (LATCH) 72
Lubrication, Body 539

Maintenance Free Battery 536
Maintenance Procedures 532
Maintenance Schedule 586
Malfunction Indicator Light (Check Engine) 530
Manual Transmission
Fluid Level Check 554
Lubricant Selection 583
Manual, Service 609
Memory Seat 116
Methanol 444
Mini-Trip Computer 237
Mirrors 93
Automatic Dimming 94
Electric Powered 96
Heated 99
Memory 116
Outside 95
Rearview 93
Trailer Towing 100
Mode
Fuel Saver 235,237
Modifications/Alterations, Vehicle 7
Monitor, Tire Pressure System 430
Mopar Parts 531,608
MTBE/ETBE 444
Multi-Displacement Engine System 392
Multi-Function Control Lever 127

Navigation System (Uconnect™ gps) 147
New Vehicle Break-In Period 81

Occupant Restraints 38,59,63
Occupant Restraints (Sedan) 56,59,62
Octane Rating, Gasoline (Fuel) 443
Odometer 214,215
    Trip 214,215
Off-Pavement Driving (Off-Road) 347,369
Off-Road Driving (Off-Pavement) 347,369
Oil Change Indicator 217,235
Oil Change Indicator, Reset 217,235
Oil, Engine 533,582
    Capacity 580
    Change Interval 533
    Dipstick 533
    Disposal 535
    Filter 535,582
    Filter Disposal 535
    Identification Logo 534
    Materials Added to 535
    Pressure Gauge 214
    Recommendation 534,580
    Synthetic 535
    Viscosity 534,580
Onboard Diagnostic System 529,530
Opener, Garage Door (HomeLink®) 152
Operating Precautions 529
Operator Manual (Owner's Manual) 4
Outside Rearview Mirrors 95
Overdrive 315,323
Overdrive OFF Switch 315,323
Overhead Console 150
Overheating, Engine 211
Owner's Manual (Operator Manual) 4,609

Panic Alarm 24
Park Sense System, Rear 138

Parking Brake 392
Passing Light 128
Pedals, Adjustable 133
Personal Settings 242
Pets 81
Pets, Transporting 81
Phone, Cellular 101
Phone, Hands-Free (Uconnect™) 101
Pickup Box 184
Placard, Tire and Loading Information 411
Power
    Door Locks 30
    Mirrors 96
    Outlet (Auxiliary Electrical Outlet) 162,167
    Seats 102
    Sliding Rear Window 181
    Steering 390,391
    Sunroof 158
    Windows 34
Power Steering Fluid 583
Pregnant Women and Seat Belts 52
Pretensioners
    Seat Belts 50
Programmable Electronic Features 242
Programming Transmitters
(Remote Keyless Entry) 20

Radial Ply Tires 418
Radiator Cap (Coolant Pressure Cap) 544,547
Radio Operation 290
Ramp Travel Index 347
Rear Axle (Differential) 553
Rear Cargo Area Utility Rails 196
Rear Park Sense System 138
Rear Seat, Folding 111,112
Rear Window Features 180
Rear Window, Sliding 181
Reclining Front Seats 109

Reclining Rear Seats 110
Recorder, Event Data 66
Recreational Towing 478
Shifting into Transfer Case Neutral(N) . . . 481,483
Shifting out of Transfer Case
Neutral (N) 482,486
Reformulated Gasoline 444
Refrigerant 539
Reminder, Seat Belt 51
Remote Control
Starting System 26
Remote Keyless Entry (RKE) 20
Remote Sound System (Radio) Controls 288
Remote Starting System 26
Replacement Keys 17
Replacement Parts 531
Replacement Tires 423
Reporting Safety Defects 608
Resetting Oil Change Indicator 217,235
Restraint, Head 114
Restraints, Child 67,74
Restraints, Occupant 38
Rotation, Tires 428

Safety Checks Inside Vehicle 83
Safety Checks Outside Vehicle 85
Safety Defects, Reporting 608
Safety Information, Tire 406
Safety Tips 82
Safety, Exhaust Gas 82
Satellite Radio Antenna 271
Schedule, Maintenance 586
Seat Belt Maintenance 562
Seat Belt Reminder 51
Seat Belts 38,39,83
Adjustable Upper Shoulder Anchorage 47
And Pregnant Women 52
Child Restraint 67,70

Extender 52
Front Seat 39
Inspection 83
Pretensioners 50
Reminder 226
Untwisting Procedure 47
Seats 101,110
Adjustment 101
Child 70
Folding Floor 181
Heated 104
Memory 116
Power 102
Rear Folding 111,112
Reclining 109
Reclining Rear 110
Security Alarm (Theft Alarm) 18
Selection of Coolant (Antifreeze) 545,582
Sentry Key (Immobilizer) 16
Sentry Key Programming 17
Sentry Key Replacement 17
Service Assistance 605
Service Contract 607
Service Manuals 609
Setting the Clock 250,260
Settings, Personal 242
Shift Lever Override 516
Shifting 312
Automatic Transmission 313,318
Transfer Case 328
Transfer Case, Shifting into Transfer Case Neutral (N) 481,483
Transfer Case, Shifting out of Transfer Case Neutral (N) 482,486
Shoulder Belt Upper Anchorage 47
Shoulder Belts 39
Signals, Turn 85,128,210

Sliding Rear Window
Power 181
Snow Chains (Tire Chains) 425
Snow Plow 474
Snow Tires 427
Spare Tire 419,420
Spark Plugs 582
Speed Control (Cruise Control) 134
Speedometer 211
Stabilizer/Sway Bar System 344
Starting 26,309
Automatic Transmission 309
Cold Weather 310
Engine Fails to Start 310
Remote 26
Starting Procedures (Gas Engines) 309
Steering
Power 390,391
Wheel, Heated 132
Wheel, Tilt 131
Steering Wheel Audio Controls 288
Steering Wheel Mounted Sound System
Controls 288
Storage Compartment, Center Seat 174
Storage, Vehicle 301,569
Storing Your Vehicle 569
Sun Roof 158
Supplemental Tire Pressure Information 424
Sway Control, Trailer 405
Synthetic Engine Oil 535
System, Remote Starting 26

Tachometer 210
Tailgate 198
Temperature Control, Automatic (ATC) 295
Temperature Gauge, Engine Coolant 210
Tether Anchor, Child Restraint 72,76
Tilt Steering Column 131

Tip Start 309
Tire and Loading Information Placard 411,424
Tire Identification Number (TIN) 409
Tire Markings 406
Tire Safety Information 406
Tires 85,415,611
Aging (Life of Tires) 422
Air Pressure 415
Chains 425
Compact Spare 419
Dual 429,507
General Information 415
High Speed 417
Inflation Pressures 416
Life of Tires 422
Load Capacity 411,412
Pressure Monitor System (TPMS) 430
Pressure Warning Light 221
Quality Grading 611
Radial 418
Replacement 423
Rotation 428
Safety 406,415
Sizes 407
Snow Tires 427
Spinning 421
Tread Wear Indicators 422
Tongue Weight/Trailer Weight 462
Torque Converter Clutch 318,324
Tow Hooks, Emergency 515
Towing 456,518
Disabled Vehicle 518
Guide 461
Recreational 478
Weight 461
Traction 365
Traction Control 396
Trailer Sway Control (TSC) 405

Trailer Towing 456
Cooling System Tips 473
Hitches 460
Minimum Requirements 463
Mirrors 100
Trailer and Tongue Weight 462
Wiring 470
Trailer Towing Guide 461
Trailer Weight 461
Transfer Case 554
Electronically Shifted 329,336
Fluid 583
Transmission 313
Automatic 313,318,554
Fluid 583
Maintenance 554
Shifting 312
Transmitter Battery Service
(Remote Keyless Entry) 24
Transmitter Programming
(Remote Keyless Entry) 20
Transmitter, Garage Door Opener (HomeLink®) . . 152
Transmitter, Remote Keyless Entry (RKE) 20
Tread Wear Indicators 422
Trip Odometer 214,215
Turn Signals 128,210,571,573

UCI Connector 274,280
Uconnect™ (Hands-Free Phone) 101
Uniform Tire Quality Grades 611
Universal Consumer Interface (UCI)
Connector 274,280
Universal Transmitter 152
Untwisting Procedure, Seat Belt 47
Utility Rails, Rear Cargo Area 196

Variance, Compass 241
Vehicle Identification Number (VIN) 7

Vehicle Loading 412,453
Vehicle Modifications/Alterations 7
Vehicle Storage 301,569
Video Entertainment System™
(Rear Seat Video System) 286
Voice Recognition System (VR) 101
Voltmeter 219

Warning Lights (Instrument Cluster
Description) 206,210
Warnings and Cautions 6
Warranty Information 608
Washers, Windshield 130,540
Washing Vehicle 558
Water
    Driving Through 366
Wheel and Wheel Trim 560
Wheel and Wheel Trim Care 560
Wheel Cover 505
Wheel Nut Torque 506
Winch 370
    Accessories 374
    Operation 375
    Rigging Techniques 388
    Usage 370
Wind Buffeting 37,161
Window Fogging 301
Windows 34
    Power 34
    Rear Sliding 181
Windshield Defroster 84
Windshield Washers 129,130,540
    Fluid 129,540
Windshield Wiper Blades 540
Windshield Wipers 129
Wiper Blade Replacement 540
Wipers, Intermittent 130

INSTALLATION OF RADIO TRANSMITTING EQUIPMENT

Special design considerations are incorporated into this vehicle's electronic system to provide immunity to radio frequency signals. Mobile two-way radios and telephone equipment must be installed properly by trained personnel. The following must be observed during installation.

The positive power connection should be made directly to the battery and fused as close to the battery as possible. The negative power connection should be made to body sheet metal adjacent to the negative battery connection. This connection should not be fused.

Antennas for two-way radios should be mounted on the roof or the rear area of the vehicle. Care should be used in mounting antennas with magnet bases. Magnets may affect the accuracy or operation of the compass on vehicles so equipped.

The antenna cable should be as short as practical and routed away from the vehicle wiring when possible. Use only fully shielded coaxial cable.

Carefully match the antenna and cable to the radio to ensure a low Standing Wave Ratio (SWR).

Mobile radio equipment with output power greater than normal may require special precautions.

All installations should be checked for possible interference between the communications equipment and the vehicle's electronic systems.

RAM

SERVICE

STICK WITH THE SPECIALISTS®

Chrysler Group LLC

11D241-126-AF

Sixth Edition

Printed in U.S.A.