RANGER

Your satisfaction is our #1 goal. If you have questions or concerns with your vehicle, we suggest you follow these steps:

1. Contact your Sales Representative or Service Advisor at your selling/servicing dealership.
2. If the inquiry or concern remains unresolved, contact the Sales Manager or Service Manager at the dealership.
3. If the inquiry or concern cannot be resolved at the dealership level, please contact the Ford Customer Assistance Center.

In the United States:

Ford Motor Company
Customer Assistance Center
300 Renaissance Center
P.O. Box 43360
Detroit, MI 48243
1-800-392-3673 (FORD)
TDD for the hearing impaired: 1-800-232-5952

In Canada:

Customer Assistance Centre
Ford Motor Company of Canada, Limited
P.O. Box 2000
Oakville, Ontario L6J 5E4
1-800-565-3673 (FORD)

Outside the U.S. or Canada:

FORD MOTOR COMPANY
WORLDWIDE EXPORT OPERATIONS
1555 Fairlane Drive
Fairlane Business Park #3
Allen Park, Michigan 48101
Telephone: (313) 594-4857
Fax: (313) 390-0804

All rights reserved. Reproduction by any means, electronic or mechanical, including photocopying, recording, or by any information storage and retrieval system or translation in whole or part is not permitted without written authorization from Ford Motor Company.

Copyright © 1995 Ford Motor Company

Table of Contents

Introductory Information 1

Safety Restraints 9

Starting Your Ranger 41

Warning Lights and Gauges 53

Instrument Panel Controls 73

Steering Column Controls 87

Features 99

Electronic Sound Systems 127

Driving Your Ranger 155

Roadside Emergencies 219

Customer Assistance 241

Reporting Safety Defects 247

Accessories 251

Servicing Your Ranger 257

Quick Index 337

Index. 349

Service Station Information 372

Introductory Information

Ford's Commitment to You

At Ford Motor Company, excellence is the continuous commitment to achieve the best result possible. It is dedication to learning what you want, determination to develop the right concept, and execution of that concept with care, precision, and attention to detail. In short, excellence means being the standard by which others are judged.

Our Guiding Principles

- **Quality comes first.** For your satisfaction, the quality of our products and services must be our number one priority.
- **You are the focus of everything we do.** Our work must be done with you in mind, providing better products and services than our competition.
- **Continuous improvement is essential to our success.** We must strive for excellence in everything we do: in our products — in their safety and value — and in our services, our human relations, our competitiveness, and our profitability.
- **Employee involvement is our way of life**. We are a team. We must treat one another with trust and respect.
- **Dealers and suppliers are our partners.** We must maintain mutually beneficial relationships with dealers, suppliers, and our other business associates.
- **Integrity is never compromised.** Our conduct worldwide must be pursued in a manner that is socially responsible and commands respect for its integrity and for its positive contributions to society.

Things to Know About Using This Guide

Congratulations on the purchase of your new vehicle. This guide has information about the equipment and the options for your new vehicle. You may not have bought all of the options available to you. If you do not know which information applies to your vehicle, talk to your dealer.

This guide describes equipment and gives specifications for equipment that was in effect when this guide was approved for printing. Ford may discontinue models or change specifications or design without any notice and without incurring obligation.

NOTES and WARNINGS

NOTES give you additional information about the subject matter you are referencing.

WARNINGS remind you to be especially careful in those areas where carelessness can cause damage to your vehicle or personal injury to yourself, your passengers or other people. Please read all **WARNINGS** carefully.

⚠**WARNING**

Finding Information in This Guide

After you have read this guide once, you will probably return to it when you have a specific question or need additional information. To help you find specific information quickly, you can use the Quick Index, Table of Contents, or the Index.

The **Quick Index** at the end of the book provides a page number following each item which indicates where detailed information can be found.

Introductory Information

To use the **Index**, turn to the back of the book and search in the alphabetical listing for the word that best describes the information you need. If the word you chose is not listed, think of other related words and look them up. We have designed the Index so that you can find information under a technical term.

Canadian Owners — French Version

French Owner Guides can be obtained from your dealer or by writing to Ford Motor Company of Canada, Limited, Service Publications, P.O. Box 1580, Station B, Mississauga, Ontario L4Y 4G3.

Your Maintenance Schedule and Record Booklet

The *Maintenance Schedule and Record* booklet lists the services that are most important for keeping your vehicle in good condition. A record log is also provided to help you keep track of all services performed.

About the Warranties

Your vehicle is covered by three types of warranties: **Basic Vehicle Warranty**, **Extended Warranties** on certain parts, and **Emissions Warranties**.

Read your *Warranty Information Booklet* carefully to find out about your vehicle's warranties and your basic rights and responsibilities.

If you lose your *Warranty Information Booklet*, you can get a new one free of charge. Contact any Ford or Lincoln-Mercury dealer, or refer to the addresses and phone numbers on the first page of this owner guide.

Buying a Ford Extended Service Plan

If you bought your vehicle in the U.S., you can buy a Ford Extended Service Plan for your vehicle. This optional contract provides service protection for a longer period of time than the basic warranty that comes with your vehicle.

You do not have to buy this option when you buy your vehicle. However, your option to purchase the Ford Extended Service Plan runs out after 18 months or 18,000 miles. See your dealer for more details about the Ford Extended Service Plan.

If you purchased a Canadian vehicle and did not take advantage of the Ford Extended Service Plan at the time of purchase, you may still be eligible. See your dealer for the details.

Special Notice

NOTICE TO OWNERS OF FOUR-WHEEL DRIVE VEHICLES

As with other vehicles of this type, failure to operate this vehicle correctly may result in loss of control or an accident. Be sure to read the *Additional Special Driving Instructions for Four-Wheel Drive Vehicle Operators*, in this book and the special supplement included with four-wheel drive vehicles entitled *4-Wheeling with Ford*.

Breaking Your Vehicle In

Your new vehicle goes through an adjustment or break-in period during the first 1,000 miles (1,600 km) that you drive it. During the break-in period, you need to pay careful attention to how you drive your vehicle.

- **Avoid sudden stops.** Because your vehicle has new brake linings, you should take these steps:
  - — Watch traffic carefully so that you can anticipate when to stop.
  - — Begin braking well in advance.
  - — Apply the brakes gradually.

  The break-in period for new brake linings lasts for 100 miles (160 km) of city driving or 1,000 miles (1,600 km) of highway driving.
- Wheel lug nuts must be retightened to proper torque specifications at 500 miles/800 km of new vehicle operation. Proper torque specifications are provided in this guide. Also retighten to proper torque specification at 500 miles/800 km after any wheel change or any other time the wheel lug nuts have been loosened.
- **Use only the type of engine oil that Ford recommends.** See *Engine oil recommendations* in the Index. Do not use special "break-in" oils.

Some vehicles are equipped with a Powertrain Control Module that limits engine speeds with a cut-out mode to promote durability.

Cleaning the Outside of Your Vehicle

Pollen, bird droppings and tree sap can damage the paint, especially in hot weather. Wash your vehicle as often as necessary to keep it clean.

Take similar precautions if your vehicle is exposed to chemical industrial fallout.

Paint damage resulting from fallout is not related to a defect in paint materials or workmanship and therefore is not covered by warranty. Ford, however, believes that continual improvement in customer satisfaction is a high priority. For this reason, Ford has authorized its dealers to repair, at no charge to the owner, the surfaces of new vehicles damaged by environmental fallout within 12 months or 12,000 miles (20,000 km) of purchase, whichever comes first. Customers may be required to bring their vehicle in for inspection by a Ford representative.

Washing and Polishing Your Vehicle

Wash the outside of your vehicle, including the underside, with a mild detergent.

DO NOT:

- Wash your vehicle with hot water
- Wash your vehicle while it sits in direct sunlight
- Wash your vehicle while the body is hot

Polish your vehicle to remove harmful deposits and protect the finish.

Cleaning Chrome and Aluminum Parts

Wash chrome and aluminum parts with a mild detergent. Do not use steel wool, abrasive cleaners, fuel or strong detergents.

Cleaning Plastic Parts

Some of your vehicle's exterior trim parts are plastic. Clean with a tar and road oil remover if necessary. Use a vinyl cleaner for routine cleaning.

Do not clean plastic parts with thinners, solvents or petroleum-based cleaners.

If you have your vehicle rustproofed, remove oversprayed rustproofing with a tar and road oil remover. If rustproofing is not removed from plastic and rubber parts, it can cause deterioration.

Because your vehicle's side mouldings are painted in lacquer, do not use thinners or solvents to clean them.

Important Safety Belt Information

The use of safety belts helps to restrain you and your passengers in case of a collision. In most states and in Canada the law requires their use.

Safety belts provide best restraint when:

- the seatback is upright
- the occupant is sitting upright (not slouched)
- the lap belt is snug and low on the hips
- the shoulder belt is snug against the chest
- the knees are straight forward

To help you remember to fasten your safety belt, a warning light may come on and a chime may sound. See *Safety Belt Warning Light and Chime* in the *Warning Lights and Gauges* chapter.

See the following sections in this chapter for directions on how to properly use these safety belts. Also see *Safety Restraints for Children* in this chapter for special instructions about using safety belts for children.

⚠WARNING

Make sure that you and your passengers wear safety belts. Always drive and ride with your seatback upright and the lap belt snug and low across the hips.

⚠WARNING

Never let a passenger hold a child on his or her lap while the vehicle is moving. The passenger cannot protect the child from injury in a collision.

⚠WARNING

Ford recommends that all safety belt assemblies and attaching hardware should be inspected by a qualified technician after any collision. Safety belt assemblies not in use during a collision should also be inspected and replaced if either damage or improper operation is noted.

⚠WARNING

To reduce the risk of serious injury in a collision, children should always ride with the seatback upright.

⚠WARNING

Never wear the shoulder belt under the arm. Never swing it around the neck over the inside shoulder. Never use a single belt for more than one person or across more than one seating position. Each seating position in your vehicle has a specific safety belt assembly which is made up of one buckle and one tongue that are designed to be used as a pair. Failure to follow these precautions could increase the risk and/or severity of injury in a collision.

⚠WARNING

Lock the doors of your vehicle before driving to lessen the risk of the door coming open in a collision.

Combination Lap and Shoulder Belts

While your vehicle is in motion, the combination lap and shoulder belt adjusts to your movement. However, if you brake hard, turn hard, or if your vehicle receives an impact of 5 mph (8 km/h) or more, the lap/shoulder belt locks and helps reduce your forward movement.

After you get into your vehicle, close the door and lock it. Then adjust the seat to the position that suits you best.

Pull the combination lap/shoulder belt from the retractor so that the shoulder portion of the belt crosses your shoulder and chest. Be sure the belt is not twisted. If it is, remove the twist. Insert the belt tongue into the proper buckle until you hear a snap and feel it latch. Make sure the tongue is securely fastened to the buckle by pulling on tongue.

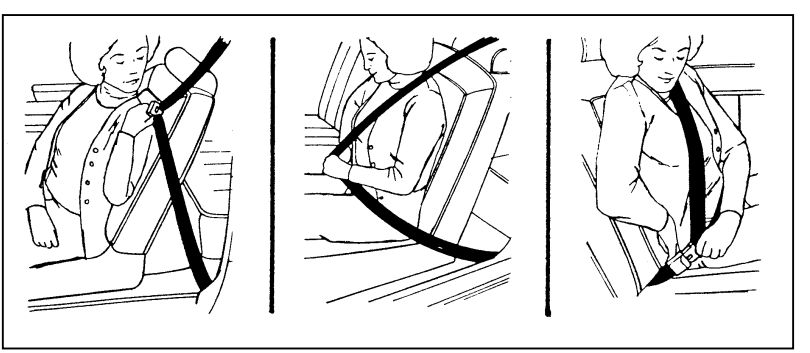

Unfastening the outboard lap/shoulder belts

NOTE: Be sure to read and understand *Important Safety Belt Information* at the beginning of this chapter.

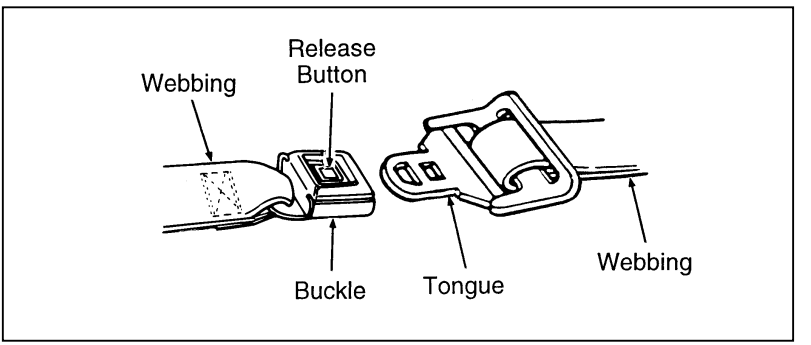

Unfastening the outboard lap/shoulder belts

While the belt retracts, guide the tongue to its original position to prevent it from striking you or the vehicle.

Safety Belts for Front Outboard Passenger and Rear Outboard Seating Positions

Your vehicle is equipped with a dual locking mode retractor on the **shoulder** belt portion of the combination lap/shoulder safety belt for the front seat outboard passenger and rear outboard passengers.

Dual locking mode retractors operate in two ways:

Vehicle sensitive (emergency) locking mode

In this operating mode, the shoulder belt retractor will allow the occupant freedom of movement, locking tight only on hard braking, hard cornering or impacts of approximately 5 mph (8 km/h) or more. The retractor can also be made to lock by pulling the belt out quickly.

Automatic locking mode

In this operating mode, the shoulder belt retractor will be automatically locked and will remain locked when the combination lap/shoulder safety belt is buckled, and does not allow the occupant freedom of movement. This mode provides the following:

- A tight lap/shoulder belt on the occupant.
- Child safety seat installation.

This mode **must be used** when installing a child safety seat on the front passenger seat and rear outboard seats where dual locking retractors are provided.

To switch the retractor from the emergency locking mode to the automatic locking mode, perform the following steps:

1. Buckle the lap/shoulder combination belt.
2. Grasp the shoulder portion of the belt and pull downward until all of the belt is extracted and, when allowed to retract, a clicking sound is heard. At this time, the belt retractor is in the automatic locking mode (child restraint mode).
3. A clicking sound will continue to be heard as the belt is allowed to retract. This indicates that the retractor is in the automatic locking mode.

NOTE: When the combination lap/shoulder belt is unbuckled and allowed to retract completely, the retractor will switch to the vehicle sensitive (emergency) locking mode. See the detailed instructions under *Safety Seats for Children* in this chapter.

Shoulder Belt Height Adjustment

Driver and right front passenger

The driver and right front passenger shoulder belt height is adjustable to one of four (4) positions (Regular cab model) or five (5) positions (Super cab model).

To adjust the belt down, push the release button on the adjuster down and slide the adjuster down. Then release the button and make sure the adjuster is firmly in one of the positions. To adjust the belt up, slide the adjuster up. (You do not have to push the release button.) Slide it up or down until the belt rests across the middle of your shoulder.

⚠WARNING

Position the shoulder belt height adjuster so that the belt rests across the middle of your shoulder. Be sure the shoulder belt is properly positioned on your shoulder each time you use the belt. If the shoulder belt is off your shoulder, on your upper arm or neck, there is a greater risk of severe injury in a collision.

NOTE: Be sure the belt is properly positioned on your shoulder each time you use the belt.

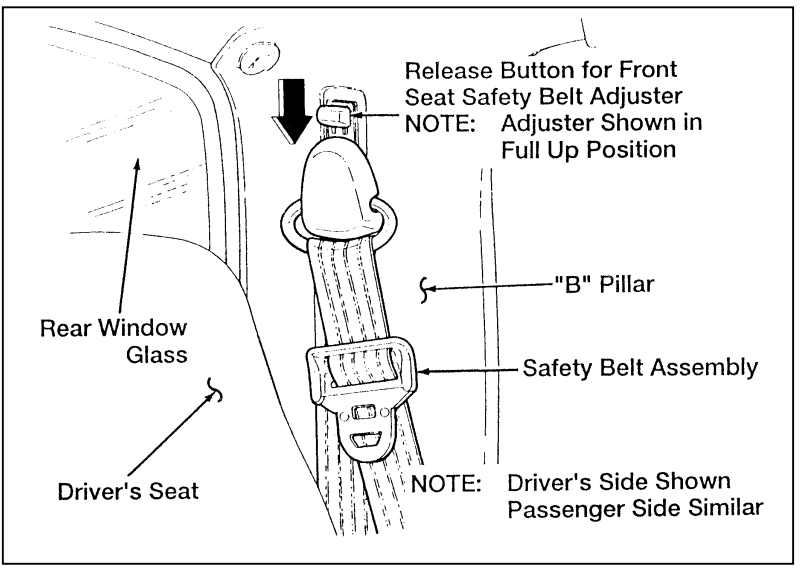

Shoulder belt height adjuster — full up position (regular cab models)

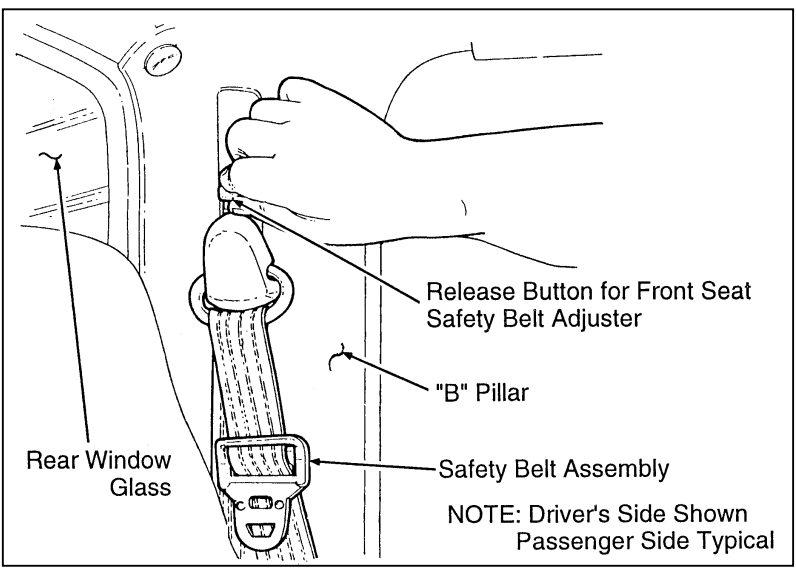

Adjusting shoulder belt height (regular cab models)

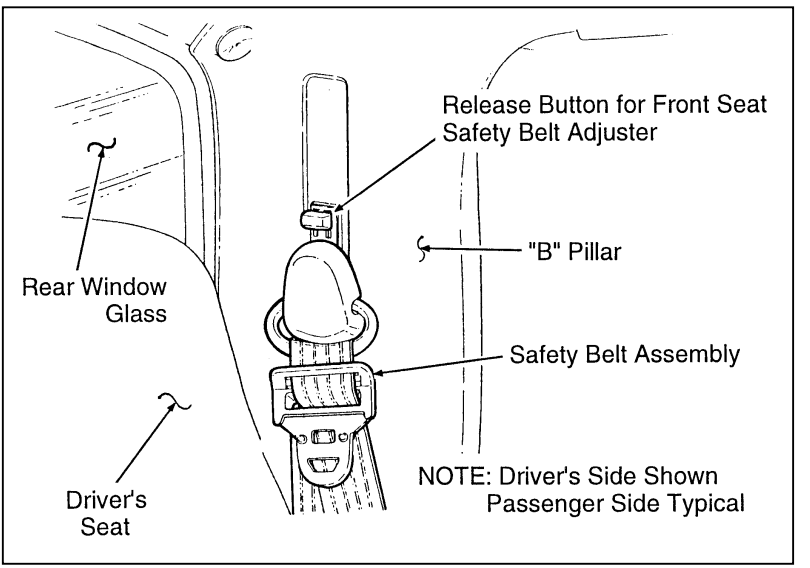

Shoulder belt height adjuster — full down position (regular cab models)

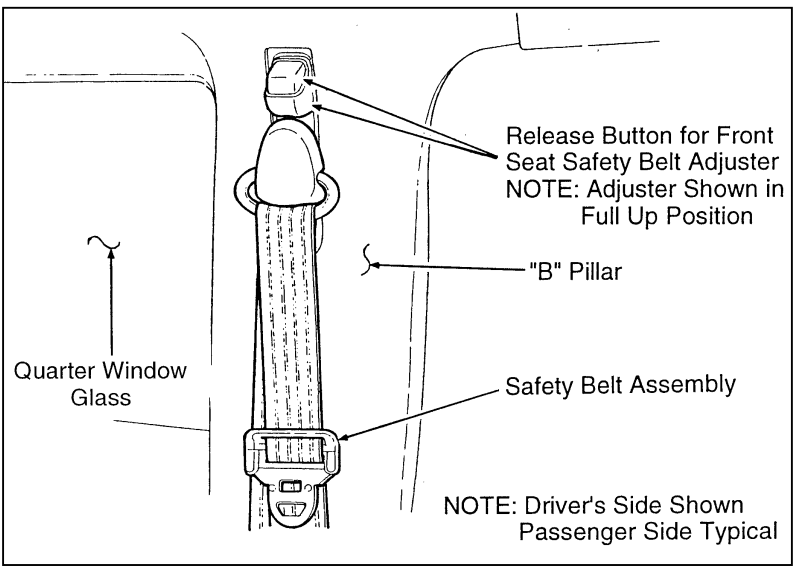

Shoulder belt height adjuster — full up position (SuperCab models)

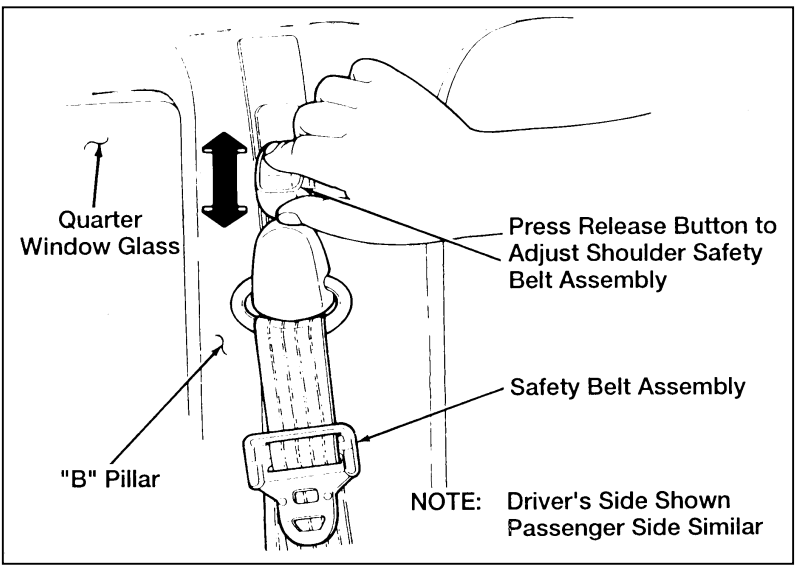

Adjusting shoulder belt height (SuperCab models)

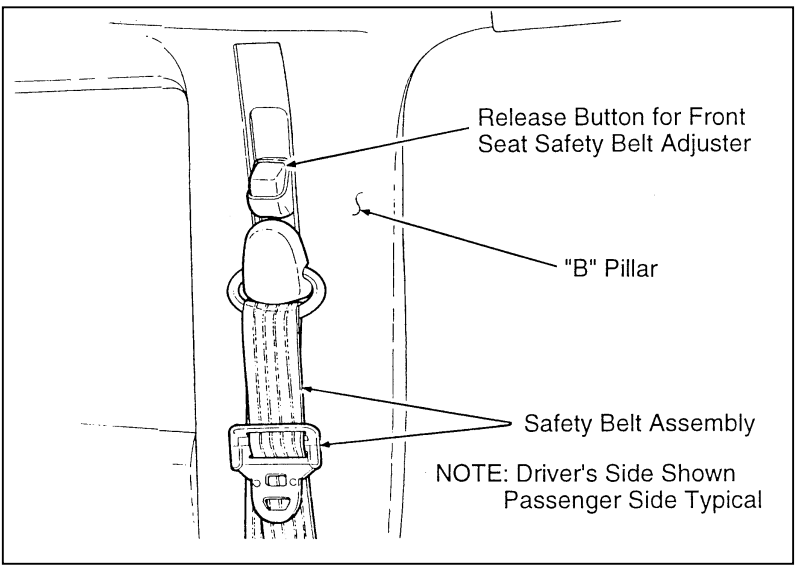

Shoulder belt height adjuster — full down position (SuperCab models)

⚠WARNING

Use the shoulder belt on the outside shoulder only. Never wear the shoulder belt under the arm. Never swing it around the neck over the inside shoulder. Never use a single belt for more than one person. Failure to follow these precautions could increase the risk and/or severity of injury in a collision.

To tighten the lap portion of the belt, pull up on the shoulder belt until it fits you snugly. The belt should rest as low on your hips as possible.

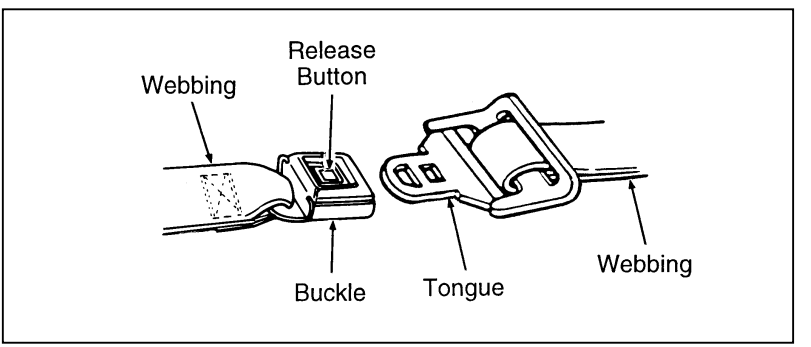

Unfastening the outboard lap/shoulder belts

Center Front Lap Belt (If equipped)

The lap belt in the center of the front seat does not adjust automatically. You must adjust it to fit snugly around your hips. Do not wear it around your waist.

To fasten the belt, pull the belt across your hips and insert the tongue into the correct buckle on your seat until you hear a snap and feel it lock. Make sure the buckle is securely fastened.

If you need to lengthen the belt, unfasten it and tip the belt tongue at a right angle to the belt. Pull the belt tongue over your lap until it reaches the buckle.

If you need to shorten the belt, pull on the loose end of the webbing until the belt fits snugly.

To unfasten the belt, push the release button on the buckle. This allows the tongue to unlatch from the buckle.

Because the center front lap belt does not have a retractor, it should be shortened and fastened when not in use.

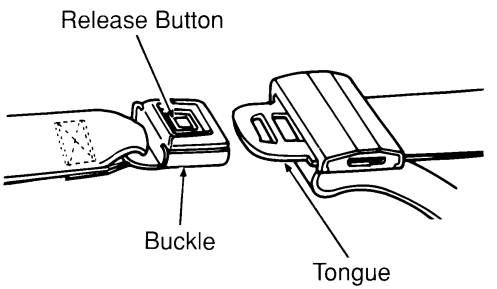

Fastening and unfastening the front center safety belt

⚠WARNING

The lap belts should fit snugly and as low as possible around the hips, not around the waist.

Rear Lap Belt with Retractor

Pull the belt out of the retractor with a steady motion and insert the tongue into the proper buckle until you hear a snap and feel the latch engage.

To Unfasten the Safety Belts with Retractors:

1. Push the release button on the buckle. This allows the tongue to unlatch from the buckle.
2. While the belt retracts, guide the tongue to its stowed position. If you do not guide the tongue, it may strike you or part of the vehicle.

Safety Belt Extension Assembly

For some people, the safety belt may be too short even when it is fully extended. You can add about eight inches (20 cm) to the belt length with a safety belt extension assembly (part number 611C22). Safety belt extensions are available at no cost from your dealer.

Use only extensions manufactured by the same supplier as the safety belt. Manufacturer identification is located at the end of the webbing on the label. Also, use the safety belt extension only if the safety belt is too short for you when fully extended. Do not use extension to change the fit of the shoulder belt across the torso.

⚠WARNING
Failure to follow these instructions will affect the performance of the safety belts and increase the risk of personal injury.

Safety Belt Maintenance

Check the safety belt systems periodically to make sure that they work properly and are not damaged.

The short plastic boot on the front safety belt at the outboard anchor location (Regular Cab, driver; SuperCab, driver and passenger) covers an energy absorbing sew pattern on the safety belt. In the event of an accident, the sew pattern may release, and the colored label (REPLACE BELT) may become visible. If this occurs, **the safety belt must be replaced**.

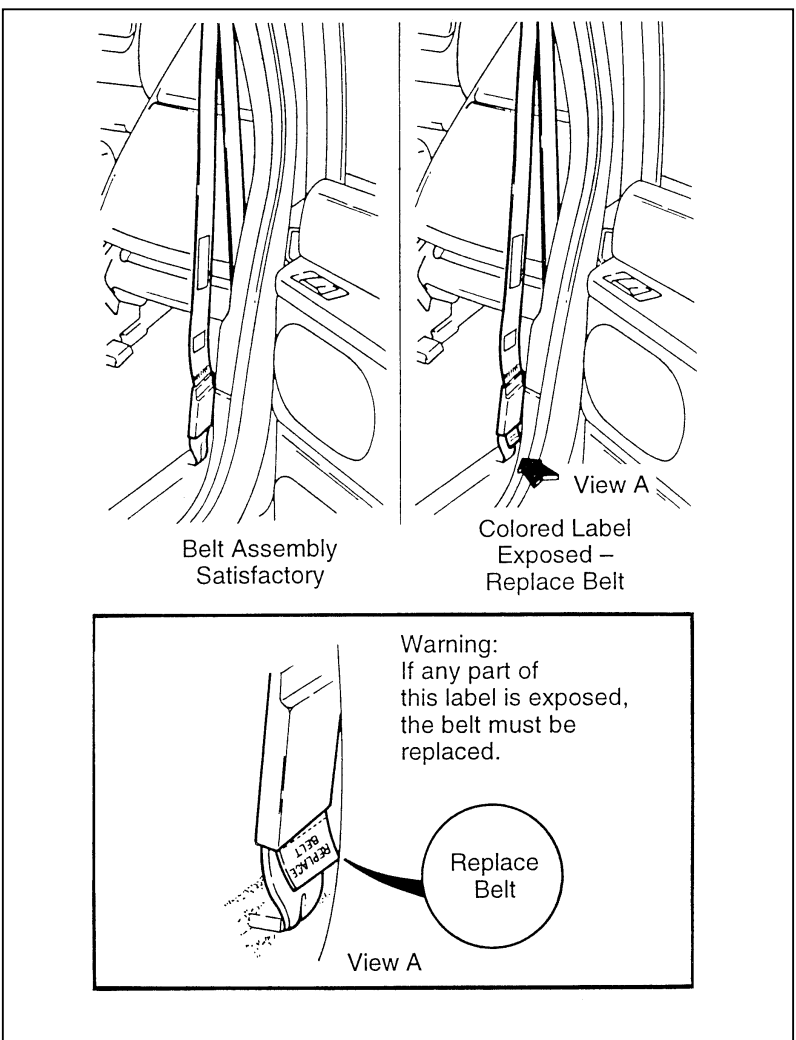

Energy absorbing sew pattern

⚠WARNING

FAILURE TO REPLACE THE SAFETY BELT ASSEMBLY UNDER THE ABOVE CONDITIONS COULD RESULT IN SEVERE PERSONAL INJURIES IN THE EVENT OF A COLLISION.

All safety belt assemblies, including retractors, buckles, front seat belt buckle support assemblies (slide bar) (if equipped), child safety seat tether bracket assemblies (if equipped), and attaching hardware, should be inspected after any collision. Ford recommends that all safety belt assemblies used in vehicles involved in a collision be replaced. However, if the collision was minor and a qualified technician finds that the belts do not show damage and continue to operate properly, they do not need to be replaced. Safety belt assemblies not in use during a collision should also be inspected and replaced if either damage or improper operation is noted.

Cleaning the Safety Belts

Clean the safety belts with any mild soap solution that is recommended for cleaning upholstery or carpets. Do not bleach or dye the belt webbing because this may weaken it.

Air Bag Supplemental Restraint System (SRS)

The driver and right front passenger air bags are Supplemental Restraint Systems (SRS), provided at these seating positions in addition to the lap/shoulder belt, and are designed to supplement the protection provided to properly belted occupants in moderate to severe frontal collisions. The supplemental air bag system does not provide restraint to the lower body.

The Importance of Wearing Safety Belts

⚠WARNING

Safety belts must be worn by all vehicle occupants to be properly restrained and help reduce the risk of injury in a collision.

⚠WARNING

All occupants of the vehicle, including the driver, should always wear their safety belts, even when an air bag Supplemental Restraint System is provided.

There are four very important reasons to use safety belts even with an air bag system. Use your safety belts to:

- help keep you in the proper position (away from the air bag) when it inflates
- reduce the risk of harm in rollover, side or rear impact collisions, because an air bag is not designed to inflate in such situations
- reduce the risk of harm in frontal collisions that are not severe enough to activate the supplemental air bag
- reduce the risk of being thrown from your vehicle

⚠WARNING

The right front passenger air bag is not designed to restrain occupants in the center front seating position.

The Importance of Being Properly Seated

In a collision, the air bag must inflate extremely fast to help provide additional protection for you. In order to do this, the air bag must inflate with considerable force. If you are not seated in a normal riding position with your back against the seatback, the air bag may not protect you properly and could possibly hurt you as it inflates.

Important Information About the Right Front Passenger Air Bag (If equipped)

It is important for the front seat passengers' safety that they remain properly seated whenever the vehicle is moving. This means that small children should be secured in appropriate child safety seats or infant seats, and all other occupants should sit upright, with their backs against the seatback, and restrained by lap and shoulder belts. No passenger should sit toward the front edge of the seat, or stand or lean near the air bag cover (which is near the glove box).

⚠WARNING

Rear-facing infant seats should not be placed in the front seat unless the passenger air bag deactivate switch is turned to OFF. In rear-facing infant seats, the infant's head is closer to the passenger air bag. The force of the rapidly inflating air bag could push the top of the rear-facing seat against the vehicle seatback. Turning the passenger air bag deactivate switch to OFF will prevent the passenger air bag from deploying, avoiding any interaction between the passenger air bag and the rear-facing infant seat.

Passenger Air Bag Deactivate Switch

If your vehicle is equipped with the passenger air bag option, it also has a passenger air bag deactivate switch. The switch is located at the lower center of the instrument panel, next to the ashtray. The switch must be used to turn off the passenger air bag when a rear-facing infant seat is installed in the right front or center front passenger seat position. To turn the passenger air bag off:

NOTE: If the yellow peel-off label is still on the switch, pull the tab to remove it, and discard it.

1. Insert the ignition key into the switch.
2. Rotate the ignition key clockwise until the key points to the word OFF printed on the instrument panel.
3. Remove the ignition key.

⚠WARNING
In order to avoid inadvertent deployment of the passenger air bag, always remove the ignition key from the passenger air bag deactivate switch.

4. Check that the amber OFF light illuminates when the ignition switch is placed in ON.

⚠WARNING
If the light fails to illuminate when the passenger air bag switch is in the OFF position and the ignition switch is in ON, have the passenger air bag switch serviced at your Ford or Lincoln-Mercury dealer immediately.

The passenger air bag will remain off until it is turned on. When the infant seat is removed, turn the air bag on. To turn the passenger air bag on:

1. Insert the ignition key into the switch.
2. Rotate the ignition key counterclockwise until it points to the ON printed on the instrument panel.
3. Remove the ignition key from the switch.
4. Check that the amber OFF light is not illuminated when the ignition switch is placed in ON.

⚠WARNING

If the light is illuminated when the passenger air bag switch is in the ON position and the ignition switch is in ON, have the passenger air bag switch serviced at your Ford or Lincoln-Mercury dealer immediately.

The amber OFF light warns the driver and any passengers that the passenger air bag is turned off. The passenger air bag should be turned off ONLY when the rear-facing infant seat is installed at the right front or center front seats.

⚠WARNING

Keep the passenger air bag turned on unless there is a rear-facing infant seat installed in the front seat. When the passenger air bag switch is turned off, the passenger air bag will not inflate in a collision.

How the Air Bag Supplemental Restraint System Operates

The Air Bag Supplemental Restraint System consists of the driver air bag, passenger air bag (if equipped), impact sensors, a system diagnostic module, a readiness light and tone, and the electrical wiring which connects the components.

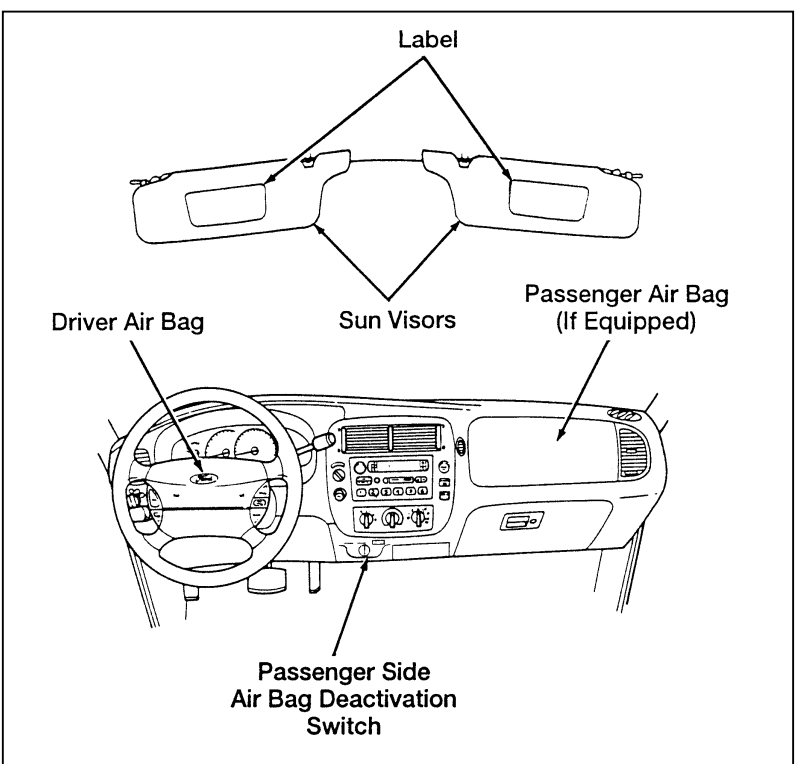

The location of the air bags and warning labels

The driver air bag is in the center of the steering wheel. The right front passenger seat air bag (if equipped) is in the upper right hand section of the instrument panel ledge above the glove compartment.

If a collision occurs, the sensors sense the severity of the impact and activate the air bags if necessary. The air bag system is designed to deploy in frontal and front-angled collisions more severe than hitting a parked vehicle (of similar size and weight) head-on at about 28 mph (45 km/h). Because the system senses the crash severity rather than vehicle speed, some frontal collisions at speeds above 28 mph (45 km/h) will not inflate the air bag.

When the sensors activate the system, the air bags inflate rapidly, filling with non-toxic nitrogen gas in a fraction of a second. Immediately after inflation, the air bags deflate by releasing the nitrogen gas through vent holes. The whole process takes place in a matter of seconds.

⚠WARNING
Air bag system components get hot after inflation. Do not touch them after inflation.

The air bag system uses a readiness light on the instrument cluster and a tone to indicate the condition of the system. When you turn the ignition key to the ON position, this light will illuminate for approximately six (6) seconds and then turn off. This indicates that the system is operating normally. NOTE: Maintenance of the air bag system is not required.

Inflated driver-side air bag

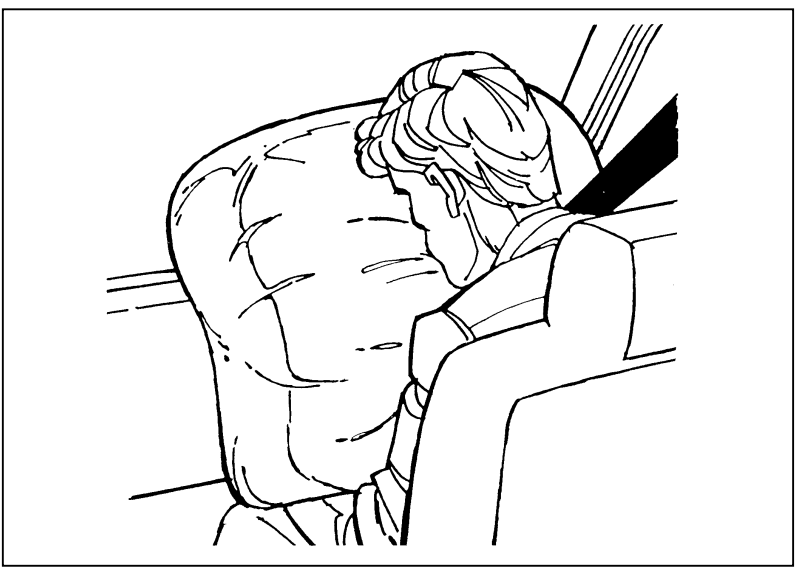

Inflated passenger-side air bag

⚠WARNING

If the air bag is inflated, THE AIR BAG WILL NOT FUNCTION AGAIN AND MUST BE REPLACED IMMEDIATELY. If the air bag is not replaced, the unrepaired area will increase the risk of injury in a collision.

To ensure that the air bag system will operate as intended in a crash, the system is equipped with a diagnostic module, which controls a readiness lamp and a warning tone. The diagnostic module monitors its own circuits, the air bag electrical system, the air bag readiness light, the air bag power, and the air bag inflators.

A problem with the system is indicated by one or more of the following:

- the readiness light will either flash or stay lit,
- or it will not light immediately after ignition is turned on,
- or a group of five beeps will be heard. The tone pattern will repeat periodically until the problem and light are repaired.

If any of these things happen, have the air bag system serviced at your Ford or Lincoln-Mercury dealer immediately. Unless serviced, the air bag supplemental restraint system may not function properly in the event of a collision.

⚠WARNING
Do not attempt to service, repair, or modify the Air Bag Supplemental Restraint System or its fuses. See your Ford or Lincoln-Mercury dealer.

Disposal of supplemental air bag equipped vehicles

For disposal of air bags or air bag equipped vehicles, see your local Ford or Lincoln-Mercury dealer. Air bags **MUST** be disposed of by qualified personnel.

Safety Restraints for Children

In the U.S. and Canada, you are required by law to use safety restraints for children. If small children ride in your vehicle — this generally includes children who are four years old or younger and who weigh 40 pounds (18 kg) or less — you must put them in safety seats that are made specially for children. Safety belts alone do not provide maximum protection for these children. Check your local and state laws for specific requirements.

⚠WARNING

Never let a passenger hold a child on his or her lap while the vehicle is moving. The passenger cannot protect the child from injury in a collision.

⚠WARNING

To prevent the risk of injury, make sure children sit where they can be properly restrained.

⚠WARNING

It is extremely dangerous to ride in a cargo area, inside or outside of a vehicle. In a collision, people riding in these areas are more likely to be seriously injured or killed.

⚠WARNING

Do not allow people to ride in any area of your vehicle that is not equipped with seats and safety belts.

⚠WARNING

Be sure everyone in your vehicle is in a seat and using a safety belt properly.

⚠WARNING

Carefully follow all of the manufacturer's instructions included with the safety seat you put in your vehicle. If you do not install and use the safety seat properly, the child may be injured in a sudden stop or collision.

When possible, put children in the rear seat of your vehicle. Accident statistics suggest that children are safer when properly restrained in the rear seating positions than in the front seating positions.

⚠WARNING
Do not install a child seat in a center facing jump seat.

⚠WARNING
Safety belts and seats can become hot in a vehicle that has been closed up in sunny weather; they could burn a small child. Check seat covers and buckles before you place a child anywhere near them.

⚠WARNING
Never leave a child unattended in your vehicle.

Safety Seats for Children

Use a safety seat that is recommended for the size and weight of the child. Always follow the safety seat manufacturer's instructions when installing and using the safety seat.

Ford recommends the use of a child safety seat having a top tether strap. Install the child safety seat in a seating position which is capable of providing a tether anchorage. For more information on top tether straps see *Attaching Safety Seats With Tether Straps* in this chapter.

When installing a child safety seat, be sure to use the correct safety belt buckle for that seating position, and make sure the tongue is securely fastened in the buckle. For a shoulder/lap belt combination with a sliding tongue, make sure the retractor is in the automatic locking mode.

All child restraint systems are designed to be secured in vehicle seats by lap belts or by the lap portion of a lap-shoulder belt.

⚠WARNING

If you do not properly secure the safety seat, the child occupying the seat may be injured during a collision or sudden stop. An unsecured safety seat could also injure other passengers.

⚠WARNING

Carefully follow all of the manufacturer's instructions included with the safety seat you put in your vehicle. If you do not install and use the safety seat properly, the child may be injured in a sudden stop or collision.

⚠WARNING

Seatbacks should be upright for use with child safety seats.

⚠WARNING

Always keep the buckle release button pointing upward and away from the child seat, with the tongue between the child seat and the release button as shown in the following illustration.

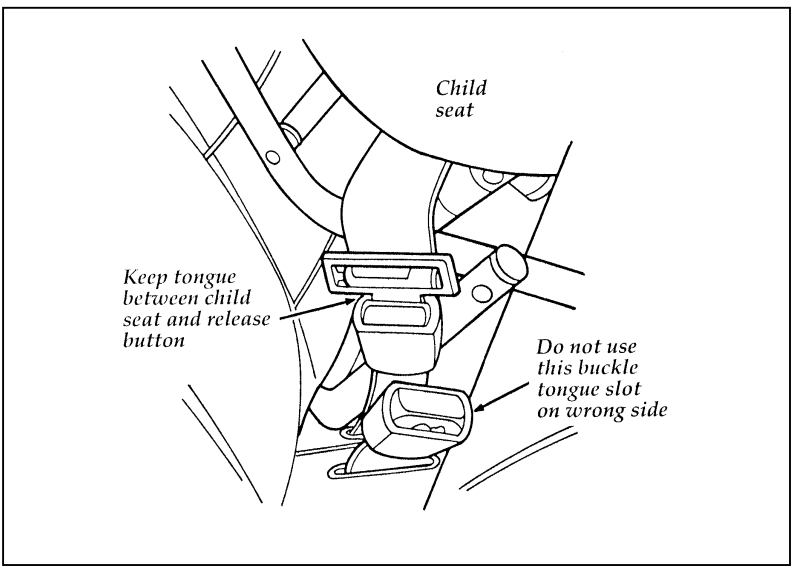

Attaching Safety Seats With Tether Straps

General Instructions

Some manufacturers make safety seats that include a tether strap that goes over the back of the vehicle seat and attaches to an anchoring point. Other manufacturers offer the tether strap as an accessory. Contact the manufacturer of your child safety seat for information about ordering a tether strap.

You can attach a tether strap anchor bracket to the cab inner back panel by using a tether anchor kit (613D74) available at no charge from any Ford dealer.

Read and follow the instructions provided with the kit carefully, for installation of the child tether strap anchor.

Follow the child seat manufacturer's instructions to attach the tether strap to the tether bracket.

⚠WARNING
Only use the tether attachment hole locations shown in the illustrations. The tether anchor may not perform properly if the wrong mounting location is used.

In Super Cabs equipped with Center Facing Jump Seats, the tether strap anchor bracket should be installed only at the center of the cab's back panel with the child seat in the front center seating position. Installing an anchor bracket at the right rear of the cab may increase risk of injury to an occupant of the right rear center facing jump seat in the event of a collision or sudden stop. If a tethered child seat is installed in the right front seating position, secure the tether strap to the webbing of the buckled right rear lap belt.

⚠WARNING
Do not install a child seat in a center facing jump seat.

Safety Belts for Children

Children who are too large for child safety seats should always wear safety belts. (See instructions with your child seat, or contact its manufacturer, to determine maximum size of child that will safely fit in the seat.)

⚠WARNING
If safety belts are not properly worn and adjusted as described, the risk of serious injury to the child in a collision will be much greater.

If the shoulder belt portion of one of the lap and shoulder belts can be positioned so that it does not cross or rest in front of the child's face or neck, the child should wear the lap and shoulder belt. Moving the child closer to the center of the vehicle may help provide a good shoulder belt fit.

To improve the fit of lap and shoulder belts on children who have outgrown child safety seats, Ford recommends use of a belt-positioning booster seat that is labelled as conforming to all Federal motor vehicle safety standards. Belt-positioning booster seats raise the child and provide a shorter, firmer seating cushion that encourages safer seating posture and better fit of lap and shoulder belts on the child. A belt-positioning booster should be used if the shoulder belt rests in front of the child's face or neck, or if the lap belt does not fit snugly on both thighs, or if the thighs are too short to let the child sit all the way back on the seat cushion when the lower legs hang over the edge of the seat cushion. You may wish to discuss the specific needs of your child with your pediatrician.

Lap belts and the lap belt portion of lap and shoulder belts should always be worn snugly and below the hips, touching the child's thighs.

⚠WARNING
To reduce the risk of serious injury in a collision, children should always ride with the seatback upright.

Ignition

Understanding the Positions of the Ignition

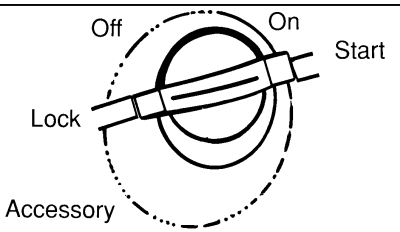

The positions of the key in the ignition lock cylinder.

ACCESSORY allows some of your vehicle's electrical accessories such as the radio and the windshield wipers to operate while the engine is not running.

In order to turn the key from the ON or OFF position to the ACCESSORY position, you must push the key release button if your vehicle's manual transmission gearshift is mounted on the floor.

LOCK locks the steering wheel and gearshift lever.

⚠WARNING

LOCK does not lock the gearshift on console or floor-mounted manual transaxle gearshifts. If the parking brake is not set and the gearshift is moved out of gear, your vehicle may move unexpectedly and injure someone.

A neutral tow feature is available on your vehicle. See your dealer for more information.

⚠WARNING

Do not leave the vehicle unattended with the transfer case in the N (Neutral) position. Always set the parking brake fully and turn off the ignition when leaving the vehicle.

LOCK is the only position that allows you to remove the key. The LOCK feature helps to protect your vehicle from theft.

If your key is stuck in the LOCK position and will not turn, move your steering wheel left or right until the key turns freely.

OFF allows you to shut off the engine and all accessories without locking the steering wheel or the automatic transmission gearshift lever.

ON allows you to test your vehicle's warning lights (except the brake system warning light) to make sure they work before you start the engine. The key returns to the ON position once the engine is started and remains in this position while the engine runs.

START cranks the engine. Release the key once the engine starts so that you do not damage the starter. The key should return to ON when you release it. The START position also allows you to test the brake warning light.

Ignition Key Buzzer or Chime

The buzzer or chime will sound if you open the driver's door while the key is in the ignition. Never leave your vehicle unattended with the key in the ignition.

Removing the Key From the Ignition

Procedures for removing your key from the ignition will vary, depending on the type of gearshift your vehicle has. Gearshift levers may be mounted on the steering column or on the floor or console.

If you have a manual transmission, you have a key release lever which allows you to remove your key from the ignition. The key release lever is on the upper right of the steering column, just above the key lock cylinder.

If your vehicle's gearshift lever is mounted on the column:

1. Put the gearshift in P (Park).
2. Set the parking brake fully before removing your foot from the service brake. (This will avoid "binding" or "loading" the park gear if you park on a grade.)
3. Turn the ignition key to LOCK.
4. Remove the key.

If your vehicle's gearshift lever is mounted on the floor:

1. Put the gearshift in 1 (First).
2. Turn the ignition key to OFF.
3. Set the parking brake fully before removing your foot from the service brake.
4. Push and hold in the key release button.
5. Turn the key to LOCK.
6. Remove the key.

⚠WARNING

Always set the parking brake fully and make sure that the gearshift is latched in P (Park) (automatic transmission) or 1 (First) (manual transmission).

⚠WARNING

Do not leave children, unreliable adults, or pets alone in your vehicle. They could accidentally injure themselves or others through inadvertent operation of the vehicle. Further, on hot, sunny days, temperatures in a closed vehicle could quickly become high enough to cause severe and possibly fatal injuries to people as well as animals.

Fuel-Injected Engines

When starting a fuel-injected engine, **the most important thing to remember is to avoid pressing down on the accelerator before or during starting**. Only use the accelerator when you have problems getting your vehicle started. See *Starting Your Engine* in this chapter for details about when to use the accelerator while you start your vehicle.

Starting Your Vehicle

Preparing to Start Your Vehicle

⚠WARNING

Do not start your vehicle in a closed garage or other enclosed area. Never sit in a stopped vehicle for more than a short period of time with the engine running. Exhaust fumes are toxic. See *Guarding Against Exhaust Fumes* in this chapter for more instructions.

Starting Your Ranger

Before you start your vehicle, do the following:

1. Make sure all occupants in the vehicle buckle their safety belts. See *Safety Restraints* in the Index for more details.
2. Make sure the headlamps and other accessories are turned off when starting.
3. **If you have an automatic transmission,** make sure that the gearshift lever is in P (Park) and the parking brake is set before you turn the key.
4. **If you have a manual transmission,** make sure that the parking brake is fully set, push the clutch pedal to the floor, and put the gearshift into Neutral before you turn the key. (Remember, the starter will operate only if the clutch pedal is pushed in all the way).

Before you start your vehicle, you should test the warning lights on the instrument panel to make sure that they work. Refer to the *Warning Lights and Gauges* chapter.

Starting Your Engine

To start your engine:

1. Follow the steps under *Preparing to Start Your Vehicle* at the beginning of this section.
2. Turn the ignition key to the ON position.
3. DO NOT depress the accelerator pedal when starting your engine. DO NOT use the accelerator while the vehicle is parked.
4. Turn the key to the START position (cranking) until the engine starts. Allow the key to return to the ON position after the engine has started.

   If you have difficulty in turning the key, rotate the steering wheel slightly because it may be binding.

For a cold engine:

- At temperatures **10˚F (-12˚C) and below:** If the engine does not start in **fifteen (15) seconds** on the first try, turn the key to OFF, wait approximately ten (10) seconds so you do not flood the engine, then try again.
- At temperatures **above 10˚F (-12˚C):** If the engine does not start in **five (5) seconds** on the first try, turn the key to OFF, wait approximately ten (10) seconds so you do not flood the engine, then try again.

For a warm engine:

- Do not hold the key in the START position for more than **five (5) seconds** at a time. If the engine does not start within five (5) seconds on the first try, turn the key to the OFF position. Wait a few seconds after the starter stops, then try again.

Whenever you start your vehicle, release the key as soon as the engine starts. Excessive cranking could damage the starter.

After starting, allow the engine to idle for a few seconds before driving away.

If the engine does not start after two attempts:

1. Turn the ignition key to the OFF position.
2. Press the accelerator all the way to the floor and hold it.
3. Turn the ignition key to the START position.
4. Release the ignition key when the engine starts.
5. Release the accelerator gradually as the engine speeds up. Then drive away in the normal manner.

If the engine still does not start, the fuel pump shut-off switch may have been triggered. For directions on how to reset the switch see *Fuel Pump Shut-Off Switch* later in this chapter.

A computer system controls the engine's idle speed. When you start your vehicle, the engine's idle speed normally runs high. These faster engine speeds will make your vehicle coast slightly faster than its normal idle speed. It should, however, slow down after a short time. If it does not, have the idle speed checked.

If the engine idle speed does not slow down automatically, do not allow your vehicle to idle for more than 10 minutes. Have the vehicle checked.

⚠WARNING

Extended idling at high engine speeds can produce very high temperatures in the engine and exhaust system, creating the risk of fire or other damage.

⚠WARNING

Do not park, idle, or drive your vehicle in dry grass or other dry ground cover. The emission system heats up the engine compartment and exhaust system, which can start a fire.

If you consistently start your vehicle in subzero temperatures, use an engine block heater (if your vehicle has this option).

Engine Block Heater (If equipped)

Engine block heaters are strongly recommended if you live in a region where temperatures reach −20˚F (−29˚C) or below consistently during the winter months. An engine block heater warms the engine coolant, which improves starting, warms up the engine faster, and allows the heater-defrost system to respond quickly.

⚠WARNING
To prevent electrical shock, do not use your heater with ungrounded electrical systems or two-pronged (cheater) adapters.

For best results, plug the heater in at least three hours before you start your vehicle. Using the heater for longer than three hours will not damage the engine, so you can plug it in at night to start your vehicle the following morning.

NOTE: Be sure to disconnect the engine block heater before driving your vehicle.

If the Engine Cranks but Does Not Start or Does Not Start After a Collision

The Fuel Pump Shut-off Switch

If the engine cranks but does not start or does not start after a collision, the fuel pump shut-off switch may have been triggered. The shut-off switch is a device intended to stop the fuel pump when your vehicle has been involved in a major jolt.

Once the shut-off switch is triggered, you must reset the switch by hand before you can start your vehicle.

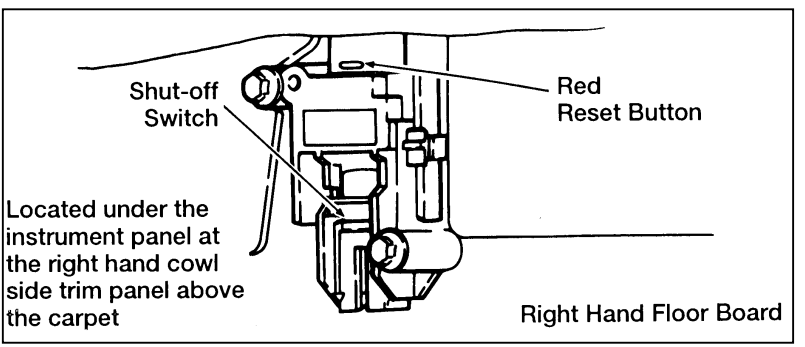

Fuel pump shut-off switch location

⚠WARNING

If you see or smell fuel, do not reset the switch or try to start your vehicle. Have all the passengers get out of the vehicle and call the local fire department or a towing service.

If your engine cranks but does not start after a collision or substantial jolt:

1. Turn the key in the ignition to OFF.
2. Check under the vehicle for leaking fuel.
3. If you do not see or smell fuel, push the red reset button down. If the button is already set, you may have a different mechanical problem.
4. Turn the ignition key ON for a few seconds, then turn it OFF.
5. Check under the vehicle again for leaking fuel. **If you see or smell fuel, do not start your vehicle again.** If you do not see or smell fuel, you can try to start your vehicle again.

6. Check all vehicle warning lights before driving your vehicle.

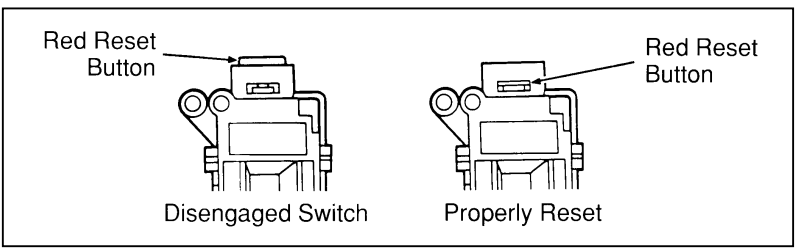

Reset button for fuel pump shut-off switch

Guarding Against Exhaust Fumes

Carbon monoxide, although colorless and odorless, is present in exhaust fumes. Take precautions to avoid its dangerous effects.

⚠WARNING

Never let your vehicle idle in an enclosed area, and do not sit in a parked vehicle, (with the engine running) for more than a short period of time. Exhaust fumes, particularly carbon monoxide, might build up. These fumes are harmful and could kill you.

⚠WARNING

If you smell exhaust fumes inside your vehicle, have your dealer inspect your vehicle immediately. Do not drive if you smell exhaust fumes.

Have the exhaust and body ventilation systems checked whenever:

- your vehicle is raised for service
- the sound of the exhaust system changes
- your vehicle has been damaged in a collision

Improve your ventilation by keeping all air inlet vents clear of snow, leaves, and other debris.

If the engine is idling while you are stopped in an open area for long periods of time, open the windows at least one inch (2.5 cm). Also, adjust the heating or air conditioning system to bring in outside air.

- HEATING — Set fan speed to medium or high, the function control knob on any position except OFF and the temperature control knob on any desired position.
- AIR CONDITIONING — Set fan speed to medium or high with the function control knob on any position (except OFF or MAX A/C) and the temperature control knob at a comfortable level.

Warning Lights and Gauges

The instrument panel (dashboard) on your vehicle is divided into several different sections. The illustrations on the following pages show the major parts of the instrument panel that are described in this chapter. Some items shown may not be on all vehicles.

Your vehicle has one of the following clusters:

- A mechanical cluster
- A mechanical cluster with tachometer

If you are not sure which cluster your vehicle has, check the diagrams on the following pages of this section.

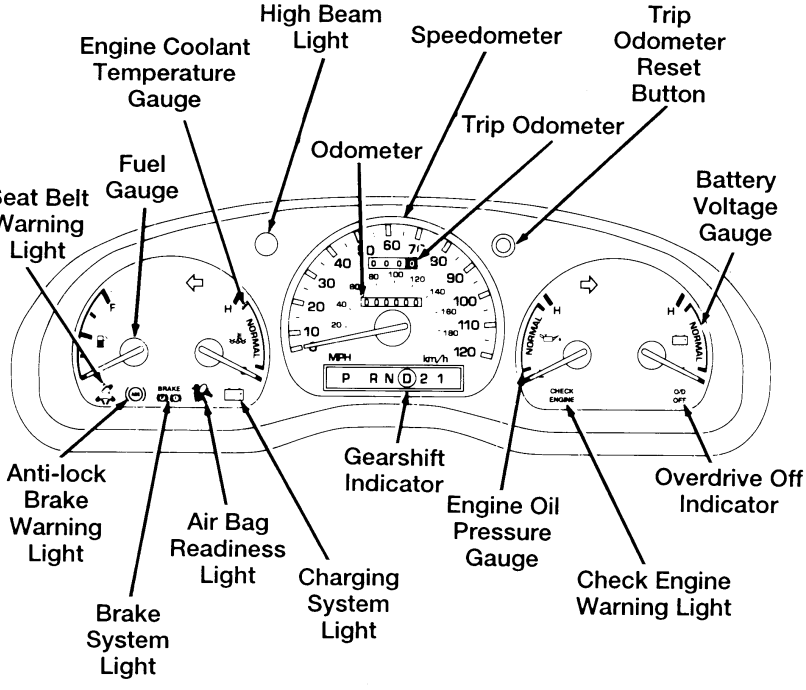
High Beam Light
Speedometer
Trip Odometer Reset Button
Engine Coolant Temperature Gauge
Trip Odometer
Odometer
Fuel Gauge
Battery Voltage Gauge
Seat Belt Warning Light
Anti-lock Brake Warning Light
Air Bag Readiness Light
Charging System Light
Brake System Light
Gearshift Indicator
Engine Oil Pressure Gauge
Overdrive Off Indicator
Check Engine Warning Light
MPH
km/h
P R N D 2 1
NORMAL
BRAKE
CHECK ENGINE
O/D OFF

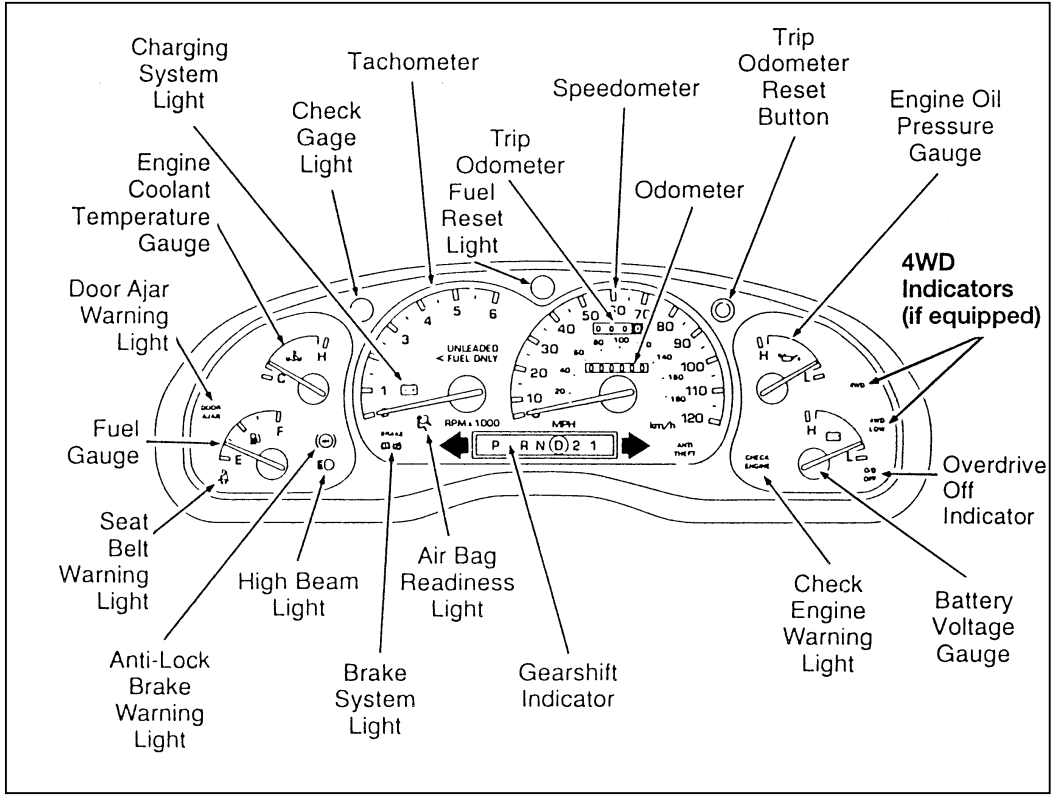

Mechanical cluster with tachometer

The Mechanical Cluster

The following warning lights and gauges are on the mechanical cluster. All of the warning lights and gauges alert you to possible problems with your vehicle. Some of the lights listed are optional. The following sections detail what each of these indicators means.

Brake System Warning Light

The warning light for the brakes can show two things — that the parking brake is not fully released, or that the brake fluid level is low in the master cylinder reservoir. If the fluid level is low, the brake system should be checked by your dealer or a qualified service technician.

This light comes on when you turn the ignition key to START to verify that the indicator bulb is working. If the light stays on or comes on after you have released the parking brake fully, have the hydraulic brake system serviced.

⚠WARNING
The BRAKE light indicates that the brakes may not be working properly. Have the brakes checked immediately.

Brake warning light symbols

Anti-lock Brake Warning Light

To check the ABS brake warning light, turn the ignition key to ON. The ABS brake warning light should glow momentarily.

NOTE: If the ABS brake warning light does not glow momentarily, have your vehicle's electrical system checked immediately. If the light begins to flash in a repeatable flash sequence, check the anti-lock system continuous power fuse and brakelamps for proper operation.

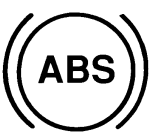

Anti-lock warning light symbol

⚠WARNING

If the anti-lock brake system warning light remains on or comes on while driving, have the braking system checked by a qualified service technician as soon as possible.

NOTE: If a fault occurs in the anti-lock system, and the brake warning light is not lit, the anti-lock system is disabled but normal brake function remains operational.

Safety Belt Warning Light and Chime

The safety belt warning light/chime reminds you to fasten your safety belt. One of the following will take place:

- If the safety belt is not buckled when the key is turned to the ON position, the light comes on for 60 seconds and the chime sounds for 4 to 8 seconds.

- If the safety belt is buckled while the light is on and the chime is sounding, both the light and chime turn off.
- If safety belt is buckled before the key is turned to the ON position, both the light and the chime will not turn on.

Safety belt warning light symbol

Air Bag Readiness Light

This light illuminates for approximately six seconds when the ignition key is turned to the ON position to verify that the indicator bulb is working and the air bag system is operating normally.

⚠WARNING

A problem with the air bag system is indicated by one or more of the following: the readiness light will either flash or stay lit, or it will not light, or a group of five beeps will be heard.

⚠WARNING

If any of these things happen, even intermittently, have the air bag system serviced at your Ford or Lincoln-Mercury dealer immediately.

Air bag readiness light symbol

Passenger Air Bag OFF Light

The passenger air bag OFF light is located in the lower center of the instrument panel next to the passenger air bag defeat switch. This yellow indicator light illuminates whenever the passenger air bag is turned off and the ignition is on. The passenger air bag should be turned off only when a rear-facing infant seat is installed in the front passenger seat.

Door Ajar Warning Light (If equipped)

If the ignition switch is in the ON position and any door or the liftgate is not completely closed, the light will illuminate.

Door ajar warning light symbol

Check Engine Warning Light

The Powertrain On-Board Diagnostic II (OBD II) system consists of the hardware and software necessary to monitor the operation of the powertrain. The OBD II system is designed to check the function of the vehicle's powertrain control system during normal operation. If an emission problem is detected, the Check Engine Warning Light (in the cluster) is turned on.

Modification or additions to the vehicle may cause incorrect operation of the OBD II system. Additions such as burglar alarms, cellular phones, and CB radios must be carefully installed. Do not install these devices by tapping into or running wires close to powertrain control system wires or components.

The light comes on briefly when you turn the ignition key to the ON position, but it should turn off when the engine cranks. If the light does not come on when you turn the ignition to the ON position or if it comes on and stays on when you are driving, have your vehicle serviced as soon as conveniently possible. This indicates a possible problem with one of the engine's emission control systems. **You do not need to have your vehicle towed in.**

If the light turns on and off at one (1) second intervals while you are driving the vehicle, it means that the engine is misfiring. If this condition persists, damage could occur to the engine or catalytic convertor. Have your vehicle serviced at the first opportunity. You do not need to have your vehicle towed in.

If the light turns on and off on rare occasions while you are driving, it means that a malfunction occurred and the condition corrected itself.

An example of a condition which corrects itself occurs when an engine running out of fuel begins to misfire. In this case, the Check Engine Warning Light may turn on and will then set a Diagnostic Trouble Code indicating that the engine was

misfiring while the last of the fuel was being consumed. After refueling, the Check Engine Warning Light will turn off after the vehicle has completed three consecutive warm up cycles without a misfire condition occurring. A warm up cycle consists of engine start from a cold condition (engine at ambient temperature) and running until the engine reaches normal operating temperature.

On the fourth engine start up, the Check Engine Warning Light will turn off as soon as the engine begins to crank. It is not necessary to have the engine serviced.

Under certain conditions, the Check Engine Warning Light may come on if the fuel cap is not properly installed. If the light comes on and you suspect the fuel cap is not properly installed, pull off the road as soon as it is safely possible and turn off the engine. Remove and replace the fuel cap, making sure it is properly seated.

After completing the three consecutive warm-up cycles and on the fourth engine start-up, the Check Engine Warning Light should turn off. If the light does not go off after the fourth engine restart, have your vehicle serviced by your dealer or a qualified technician.

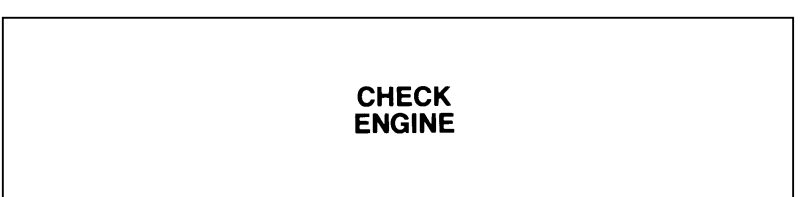

Check engine warning light symbol

Overdrive Off Indicator (If equipped)

This light tells you that the Transmission Control Switch (TCS) on the gearshift lever has been pushed. When the light is on, the transmission does not shift into overdrive. Depressing the button on the shifter once more returns the vehicle to overdrive mode. The transmission will be in the overdrive mode when the vehicle is started even if the O/D OFF mode was selected when the vehicle was last shut off.

NOTE: If the light does not come on when the TCS is depressed or if the light flashes when you are driving, have your vehicle serviced at the first opportunity. If this condition persists, damage could occur to the transmission.

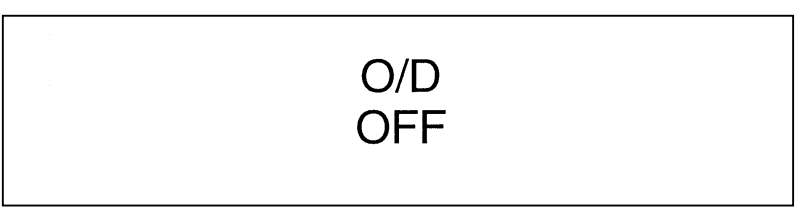

Overdrive off light (if equipped)

Charging System Light

This light, shown as a battery symbol on your cluster, indicates that your battery is not being charged and that you need to have the electrical system checked.

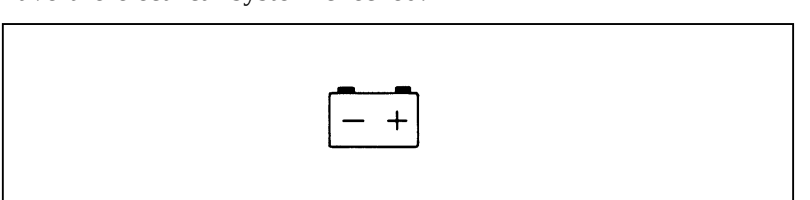

Charging system light symbol

This light comes on every time you turn the ignition to the ON or START position (engine off). The light should go off when the engine starts and the alternator begins to charge.

If the light stays on or comes on when the engine is running, have the electrical system checked as soon as possible.

This light flashes on and off when the ignition switch is OFF and any door is opened. As soon as you lock the doors, the light glows steadily. Within 30 seconds of closing all the doors, the light flashes intermittently (every 2 seconds). This indicates that the alarm system is armed.

Check Gage Light (If equipped)

This light will come on when the key is in the ON position and the:

- engine coolant temperature is high
- engine oil pressure is low
- fuel level is near empty

This light serves as a notice that a system needs your attention and to check the engine coolant temperature gauge, the engine oil pressure gauge, and the fuel level gauge.

Please see *Engine Coolant Temperature Gauge*, *Engine Oil Pressure Gauge*, or *Fuel Gauge* in this chapter for more information.

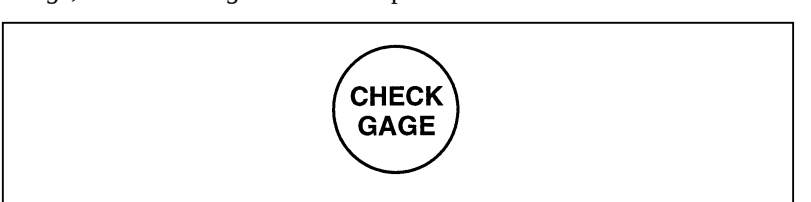

Check gage light

Fuel Reset Light (If Equipped)

Your vehicle may have a fuel reset light. The fuel reset light will come on when you turn the ignition key to ON and the fuel pump shut-off switch has been triggered. Refer to *Fuel pump shut-off switch* in the Index to find additional information.

FUEL
RESET

Fuel reset light

Battery Voltage Gauge (Voltmeter)

This gauge shows you the battery voltage when the ignition key is in the ON position.

If the battery is operating under cold weather conditions, the pointer may indicate in the upper range of the NORMAL band while the battery is charging. If you are running electrical accessories with the engine off or idling at a low speed, or the battery is not fully charged, the pointer may move toward the lower end of the NORMAL band.

If it stays outside the NORMAL band, have your vehicle's electrical system checked as soon as it is safely possible.

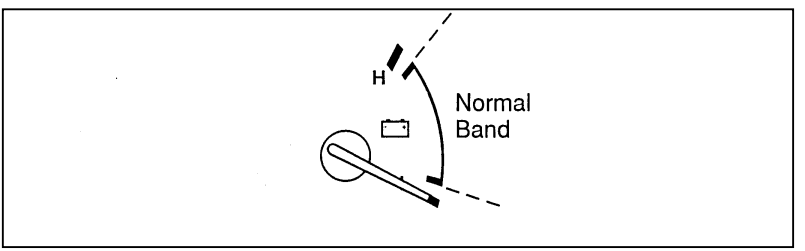

Battery voltage gauge — mechanical cluster

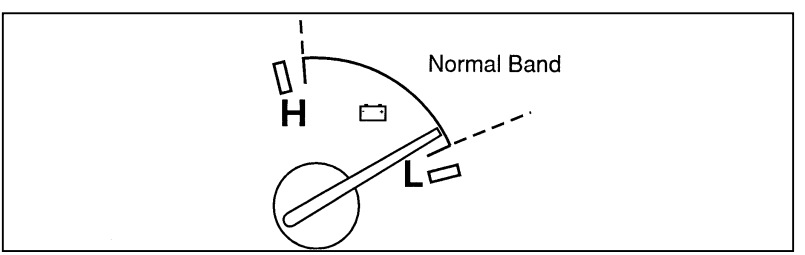

Battery voltage gauge — mechanical cluster with tachometer

Engine Oil Pressure Gauge

This gauge indicates the engine's oil pressure, not the oil level. However, if your engine's oil level is low, it could affect the oil pressure. With the engine running, the pointer should move into the NORMAL band. If the pointer drops below the NORMAL band while the engine is running, you have lost oil pressure and continued operation will cause severe engine damage.

If you lose engine oil pressure:

1. Pull off the road as soon as safely possible.
2. Turn off the engine. If you do not stop the engine as soon as safely possible, severe engine damage could result.

3. Check the engine's oil level, following the instructions on checking and adding engine oil. Refer to *Engine oil* in the Index. If you do not follow these instructions, you or others could be injured. To assure an accurate reading, your vehicle should be on level ground.

4. If the level is low, add only as much oil as necessary before you start the engine again. Do not overfill. Do not operate the engine if the pointer is below the NORMAL band, regardless of the oil level. Contact your nearest dealer for further service actions.

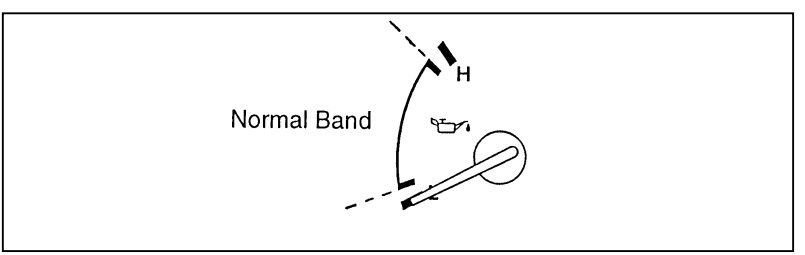

Engine oil pressure gauge — mechanical cluster

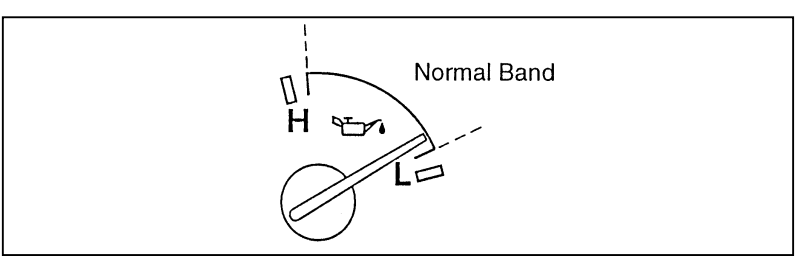

Engine oil pressure gauge — mechanical cluster with tachometer

High Beam Light

This light comes on when the headlamps are turned on high beam or when you flash the lights.

High beam indicator light symbol

"Headlamps On" Alert Chime

This chime sounds if you open the driver's door while the headlamps or parking lamps are on, and the key is removed from the ignition.

Fuel Gauge

The fuel gauge displays approximately how much fuel is in the fuel tank only when the ignition switch is ON.

For a proper fuel gauge indication after adding fuel, the ignition switch should be in the OFF position while the vehicle is being refueled.

The fuel gauge indicator may vary slightly when the vehicle is in motion.

With ignition switch OFF, the fuel gauge indicator may drift from the ignition switch ON position.

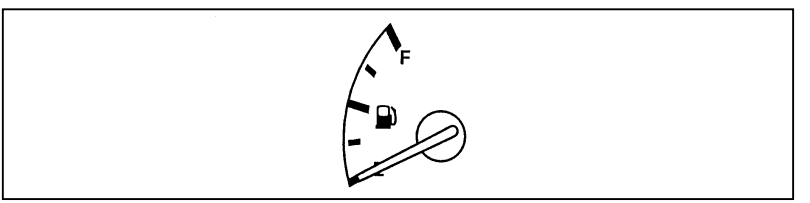

Fuel gauge — mechanical cluster

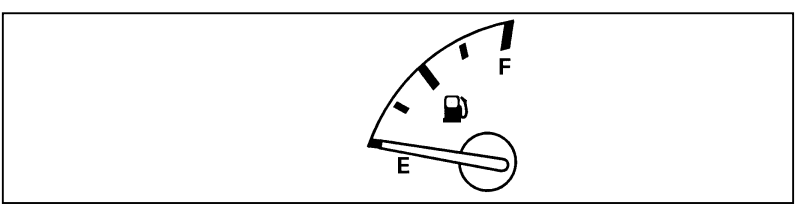

Fuel gauge — mechanical cluster with tachometer

Engine Coolant Temperature Gauge

This gauge tells you the temperature of the engine coolant, not the coolant level. If the coolant is not at its proper level or mixture, the gauge indicator will not be accurate.

The pointer moves from the C (cold) mark into the Normal band as the engine coolant warms up. It is acceptable for the pointer to fluctuate within the Normal band under normal driving conditions. Under certain driving conditions, such as heavy stop and go traffic or driving up hills in hot weather, the pointer may move to the top of the Normal band.

If, under any circumstances, the pointer moves above the NORMAL band, the engine coolant is overheating and continued operation may cause engine damage.

If your engine coolant overheats:

1. Pull off the road as soon as it is safely possible.

2. Turn off the engine. If you do not stop the engine as soon as safely possible, severe engine damage could result.
3. Let the engine cool. **DO NOT REMOVE COOLANT SYSTEM FILL CAP UNTIL THE ENGINE IS COOL.**
4. Check the coolant level following the instructions on checking and adding coolant to your engine. Refer to *Engine coolant* in the Index. If you do not follow these instructions, you or others could be injured.

If the coolant continues to overheat, have the coolant system serviced as soon as possible.

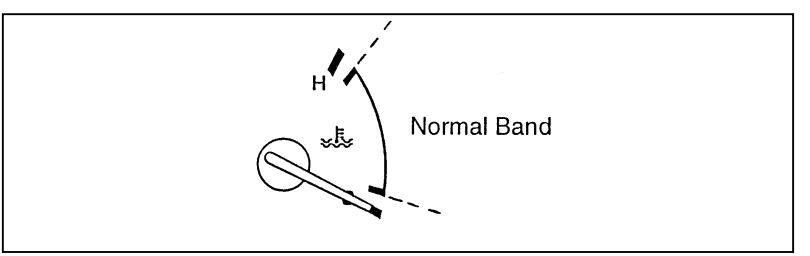

Engine coolant temperature gauge — mechanical cluster

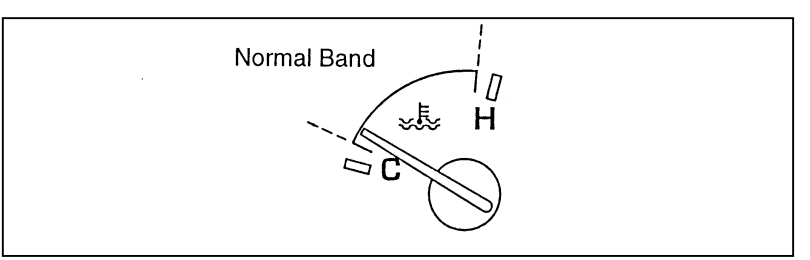

Engine coolant temperature gauge — mechanical cluster with tachometer

Speedometer

The speedometer tells you how many miles (kilometers) per hour your vehicle is moving.

Some vehicles are equipped with a vehicle speed (mph/km/h) limiting device that is contained within the Powertrain Control Module (PCM). The purpose of this device is to maintain peak vehicle speed below a specified limit. (Vehicle speed limits may vary based on engine displacement.)

If you are experiencing an “engine cut-out” condition at high speeds, it may be the result of this limiting device. It is a normal condition and can be avoided by reducing vehicle/engine speed.

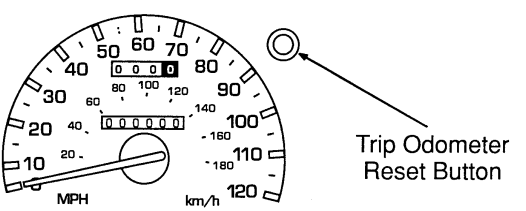

Speedometer

Odometer

The odometer tells you the total number of miles (kilometers) your vehicle has been driven.

Trip Odometer

If you want to track your mileage up to 999.9 miles (kilometers), use the trip odometer. Simply set the trip odometer to zero by pressing the reset button firmly when beginning the distance you wish to measure.

Tachometer (If equipped)

The tachometer will show you the engine's speed measured in revolutions per minute (RPM).

The tachometer may move slightly when the key is placed in the ACC or ON position, with the engine off. This is normal and does not affect the performance of the tachometer when the engine is running.

Some vehicles are equipped with an engine speed (RPM) limiting device contained within the Powertrain Control Module (PCM). The purpose of this device is to maintain peak engine speed (RPM) below a specified limit. This feature is only evident on automatic transmission vehicles when shifting manually (1, 2, D) and on all manual transmission units. (Engine speed limits may vary based on engine displacement.)

If you are experiencing an "engine cut-out" condition at high speeds, it may be the result of this limiting device. It is a normal condition and can be avoided by reducing vehicle/engine speed.

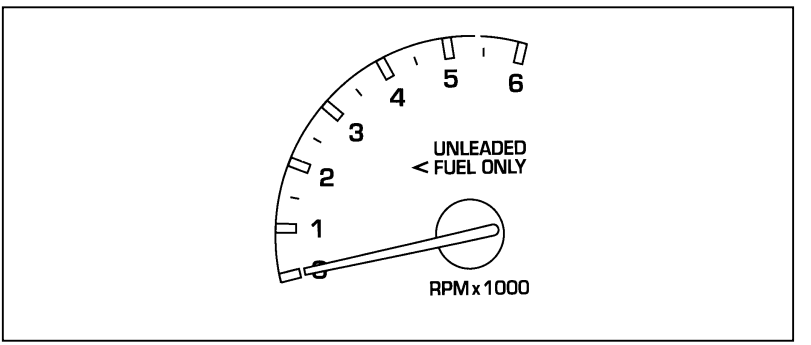

Tachometer

NOTE: If the 4.0L engine exceeds 5200 RPM, the PCM will restrict fuel flow to maintain engine speed at or below 5200 RPM. This function is designed to protect the engine and should be considered normal operation.

Instrument Panel Controls

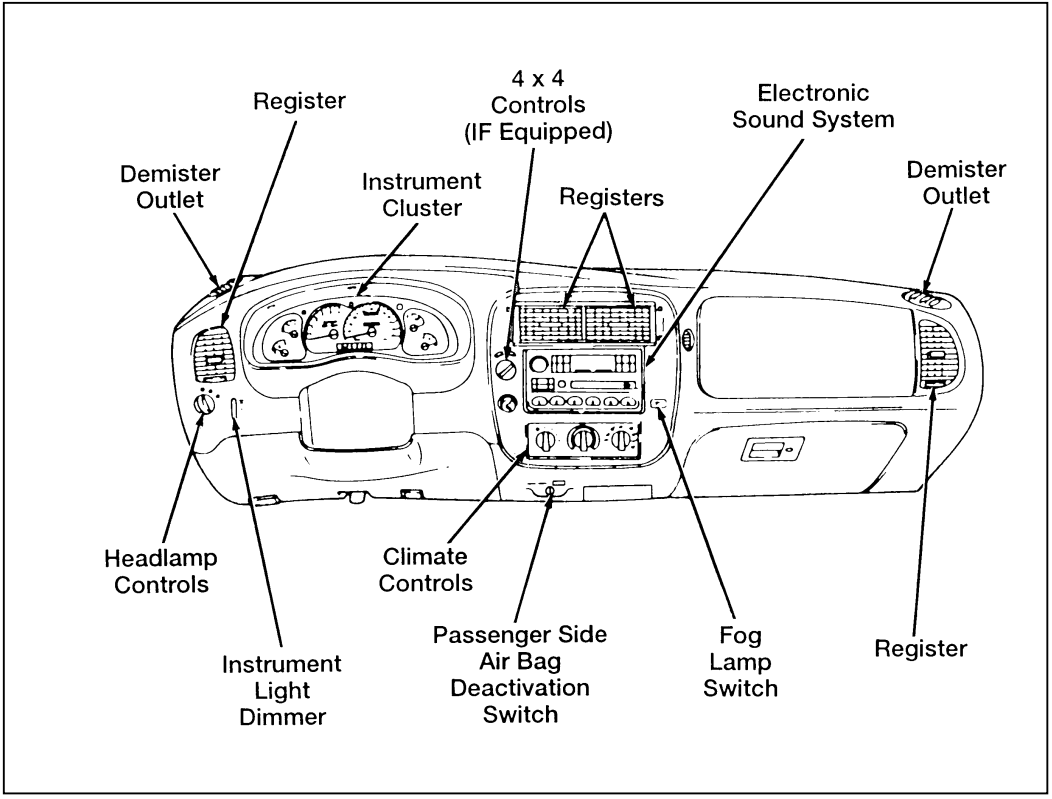

The main controls for the climate control system, lights, lamps, clock, and radio are on the instrument panel.

NOTE: Any cleaner or polish that increases the gloss (shine) of the upper part of the instrument panel should be avoided. The dull finish in this area is to help protect the driver from undesirable windshield reflection.

The Climate Control Systems

Your vehicle is equipped with a control assembly designed to handle either a combination A/C-Heater System or a Heater-Only System.

Instrument Panel Registers

There are four registers in the instrument panel. Each of these registers contains a louver assembly which can be manually adjusted to direct airflow up, down, left and right. An illustration of the register locations follows.

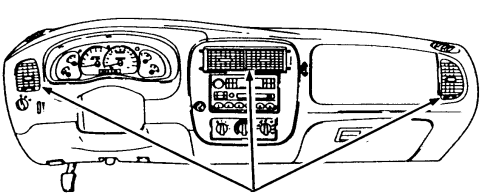

Instrument panel registers

Air Conditioning (A/C) Controls (Manual Air Conditioning)

The control for your air conditioning and heater system is located at the center of the instrument panel below the radio and will operate only when the ignition key is turned to the ON position. Your air conditioner and heater will heat and/or cool your vehicle interior depending on the function position

and temperature you select. The function selector control knob allows you to select heating or cooling and determine where the air will be directed. The temperature control knob setting determines the temperature of the air that flows into the vehicle.

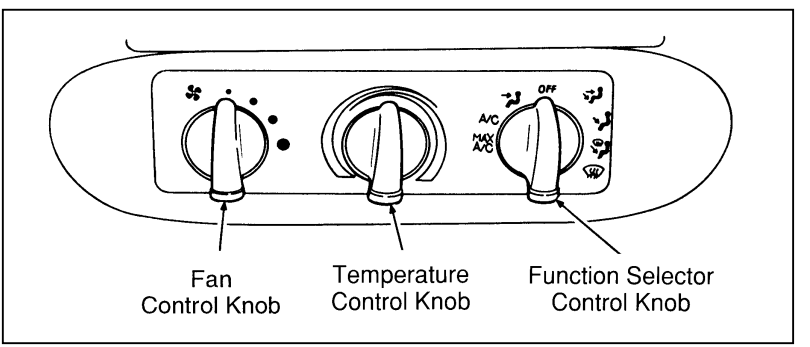

Climate control knobs

To turn your air conditioner and heater system on, select any position except OFF. This will turn the fan on and allow airflow into the vehicle. To turn your air conditioner and heater off, select OFF. This will turn the fan off and stop airflow from coming into the vehicle.

Temperature selection

The temperature control knob is the rotating knob located at the center of the control with tapered red and blue bands surrounding most of the knob. The wide red part of the band (full right) is the heat or warmer area. The wide blue area (full left) is the cooling or cool temperature area. Any position selected between full right and full left will give a temperature between the two extreme temperatures.

Fan speed adjustment

The (left) knob on the control is the fan control knob which controls the volume of air flow. Rotate the knob to the right to increase fan speed and increase the amount of air entering the vehicle. Four fan speed positions are available and are indicated by dots beside the control knob. The largest dot is high speed position.

Airflow selections

(Panel)

Use to bring outside air through the instrument panel registers. You can heat the air in this position by rotating the temperature knob into the red area. The air CANNOT be cooled below the outside temperature regardless of the temperature knob setting. Select A/C or MAX A/C to get cool air through the instrument panel registers.

A/C

Select A/C to get refrigerated outside air through the instrument panel registers. The A/C position is used for cooling except when it is extremely hot or fast cooling of the vehicle is needed. Then, select MAX A/C for fast cooling and return to A/C when you are comfortable.

MAX A/C

The MAX A/C position produces cool air more rapidly to provide faster cooling of your vehicle. This is possible because cooler air is drawn from inside the passenger area and refrigerated again instead of using warmer outside air. Using inside air will also make the fan sound louder and is normal when using MAX A/C. The air flow will be from the instrument panel registers.

(Panel and Floor)

Select to direct airflow to the floor and through the instrument panel registers at the same time. This selection can be used to either heat or cool your vehicle. The air conditioner will operate to cool the air if the outside temperature is about 50˚F (10˚C) or warmer.

(Floor)

Select to direct air to the floor. The air cannot be cooled in the position but can be heated by rotating the temperature knob into the red area.

(Floor and Defrost)

Select to direct air to the floor and windshield defrosters at the same time. If the outside temperature is about 50˚F (10˚C) or warmer, the air will also be dehumidified to remove moisture. This feature will help prevent fogging in humid weather. The air can be cooled or heated.

(Defrost)

Select to obtain maximum airflow to the windshield. Rotate the temperature knob into the red area for the air temperature required to defrost. When the outside temperature is about 50˚F (10˚C) or warmer, the air will be dehumidified to remove moisture. Rotate the knob to increase the airflow.

Operating tips

The following tips will help you to get the most satisfaction from your air conditioning and heater system.

- In humid weather, select before starting your engine. This will help to prevent windshield fogging. After a few minutes of operation, you may select another function.
- To prevent humidity buildup inside your vehicle, always drive with the air conditioner or heater system turned on.

- Do not put objects under the front seats that interfere with the flow of air to the back seat area.
- Remove any snow, ice, or leaves from the air intake area of your air conditioner and heater system that could block the air intake. The intake area is located at the bottom of the windshield.

Heater Controls (Heater-Only Vehicles)

The control for your heater system is located at the center of the instrument panel below the radio. The heater will operate only when the ignition key is turned to the ON position. Your heater will heat and/or ventilate your vehicle interior depending on the function position and temperature you select. The function selector control knob allows you to select heating or ventilation and determine where the air will be directed. The temperature control knob setting determines the temperature of the air that flows into the vehicle.

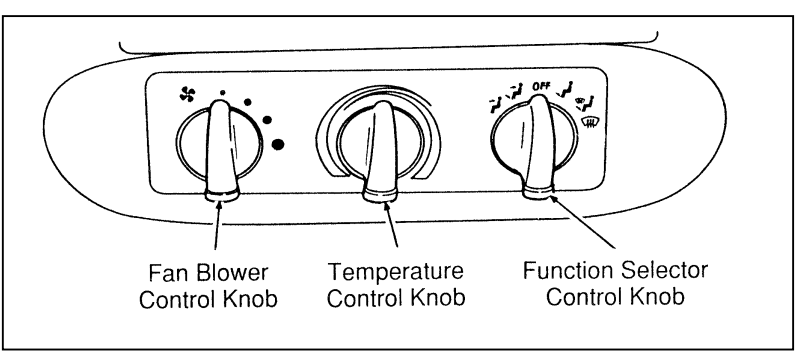

Climate control knobs (heater only)

To turn your heater system on, select any position except OFF. This turns the fan on and allows airflow into the vehicle. To turn your heater off, select OFF.

Temperature selection

The temperature control knob is the rotating knob located at the center of the control with tapered red and blue bands surrounding most of the knob. The wide red part of the band (full right) is the heat or warmer area. The wide blue area (full left) is the cool or unheated temperature area. Any position selected between full right and full left will give a temperature between the two extreme temperatures. The cool temperature you select will not be cooler than the outside temperature.

Fan speed adjustment

The (left) knob on the control is the fan control knob which controls the volume of airflow. Rotate the knob to the right to increase fan speed and increase the amount of air entering the vehicle. Four fan speed positons are available and are indicated by dots beside the control knob. The largest dot is high speed position.

Airflow selections

(Panel)

Use to bring outside air through the instrument panel registers. You can heat the air in this position by rotating the temperature knob into the RED area. The air cannot be cooled below the outside temperature regardless of the temperature knob setting.

(Panel & Floor)

Select to get airflow to the floor and through the instrument panel registers at the same time. This selection can be used to either heat or ventilate your vehicle.

(Floor)

Select to direct air to the floor. The air cannot be cooled in the position but can be heated by rotating the temperature knob into the red area.

(Floor & Defrost)

Select to get air to the floor and windshield defrosters at the same time.

(Defrost)

Select to obtain maximum air flow to the windshield. Rotate the temperature knob into the red area for the air temperature required to defrost. Rotate the knob to increase the air flow.

Operating tips

The following tips will help you to get the most satisfaction from your heater system.

- To prevent humidity buildup inside your vehicle, always drive with the heater system turned on.
- Do not put objects under the front seats that interfere with the flow of air to the back seat area.
- Remove any snow, ice, or leaves from the air intake area at the bottom of the windshield.

The Interior and Exterior Lights

Turning On the Exterior Lights

To turn on your headlamps, parking lamps, marker lamps, license plate lamps and tail lamps, use the headlamp control knob to the left of the steering column.

1. Rotate the headlamp control knob to the first position. Parking lamps, tail lamps, license plate lamps and marker lamps are now on.
2. Rotate the headlamp control knob to the next position. Headlamps are now on in addition to the above.

3. Rotate the thumb wheel when the headlamp control knob is in an “ON” position to brighten or dim the instrument panel lamps. Rotate fully upward to operate courtesy and cargo lamps.

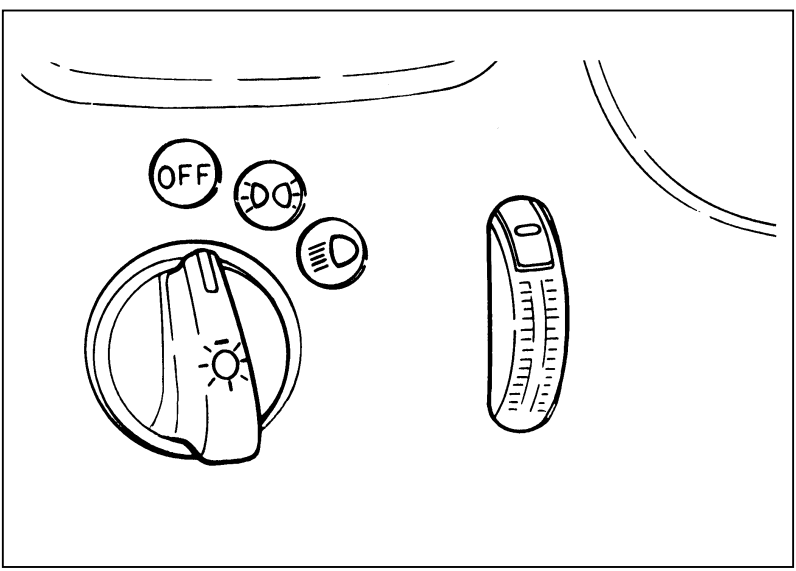

Headlamp control knob

Fog Lamps (If equipped)

The fog lamps switch is located on the instrument panel to the right of the radio and climate control.

- To turn the fog lamps on, turn on the low-beam headlamps, then push the fog lamp switch. An indicator light will glow when the lamps are on.
- To turn off, push the switch again.

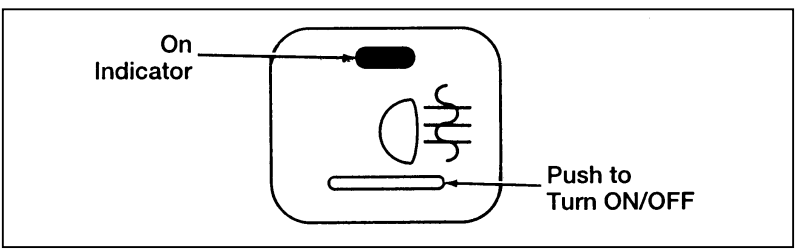

Fog lamp switch

The fog lamps act as a supplement to the low beam headlamps under limited visibility conditions such as rain, snow, dust or fog and operate only when the low beam headlamps are on.

To maximize fog lamp bulb life it is recommended that the fog lamp switch be turned off after each use prior to turning off the headlamps.

Cleaning the Exterior Lamps

Do not use dry paper towel, chemical solvents or abrasive cleaners to clean the lamps, as these may cause scratches or crack the lamps.

Daytime Running Light System

(Canadian vehicles only)

The Daytime Running Light (DRL) system turns the high beam headlamps on, with a reduced light output, when:

- The headlamp system is in the OFF position, and
- The vehicle has a fully released parking brake.

The high beam indicator light on the instrument cluster will not be on.

⚠WARNING

The Daytime Running Light (DRL) system will not illuminate the tail lamps and parking lamps. Turn on your headlamps at dusk. Failure to do so may result in a collision.

Lighting Up the Instrument Panel and the Interior of Your Vehicle

The instrument panel lights can be turned on by turning the headlamp knob toward either the first or second position. You can brighten or dim the instrument panel lights by rotating the thumb wheel.

The interior lights will shut off after 25 seconds with all the doors closed, or immediately when the ignition switch is turned to the ON position, or if the vehicle speed is above five MPH (8 km/h). The interior lights will turn off after 40 minutes if any of the doors are left open. Refer to *Battery Saver* in the *Features* section for more details.

Courtesy and Dome Lamps

The interior/courtesy lamp is automatically turned on when the driver or passenger door is opened. Turning the thumb wheel fully counterclockwise will operate the interior lamp when the doors are closed.

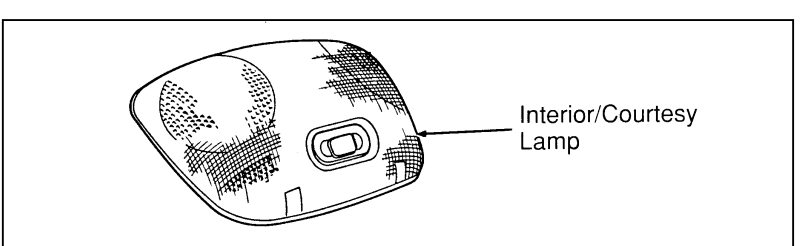

Interior/Courtesy lamp

Cleaning the Interior Lamps

Your interior dome lamps and map lamps are plastic and should be cleaned with a mild detergent diluted in water. Rinse them with clear water.

Combination Cargo and High-Mount Brakelamp

The combination cargo/high-mount brakelamp is located outside the vehicle, directly over the rear window. Use the thumb wheel to turn on the cargo lamp and interior courtesy lights.

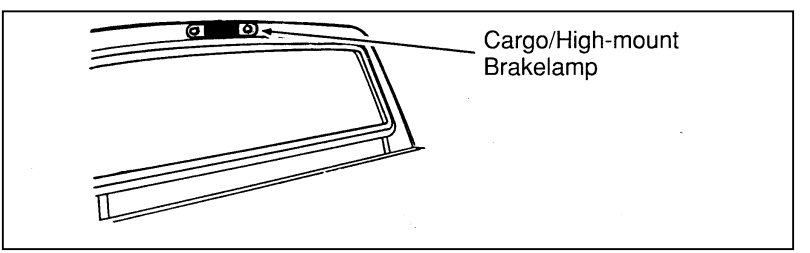

Cargo/High-mount brakelamp

⚠WARNING

Do not drive your vehicle with the cargo/courtesy light on. Showing a white light to the rear while driving on public roads is illegal in some places.

Dome/Map Lamps (If equipped)

The map lamps are located on each side of the dome light assembly. You can turn the individual map lamps on or off by sliding the switch to the left or right. To turn off, slide the switch to the middle.

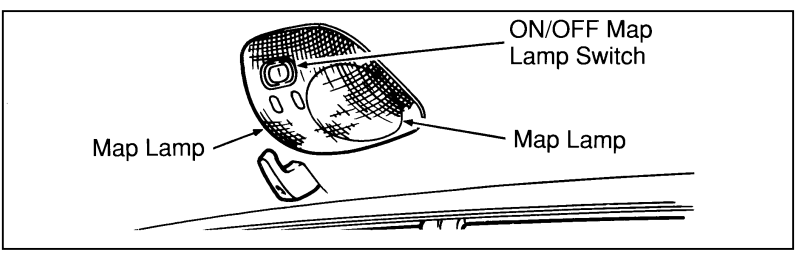

Map lamps

Clock Controls on Electronic Radios

The electronic radios have a built-in clock. For complete operating instructions, refer to *Electronic Sound Systems* in this Owner Guide.

Steering Column Controls

The controls on the steering column and wheel are designed to give you easy access to the controls while you are driving.

The Turn Signal Lever

You can use the turn signal lever on the left side of the steering column to:

- operate the turn signals and cornering lamps
- turn the high beams on/off
- flash the lamps
- turn the windshield wipers and washer on/off

Turn Signals

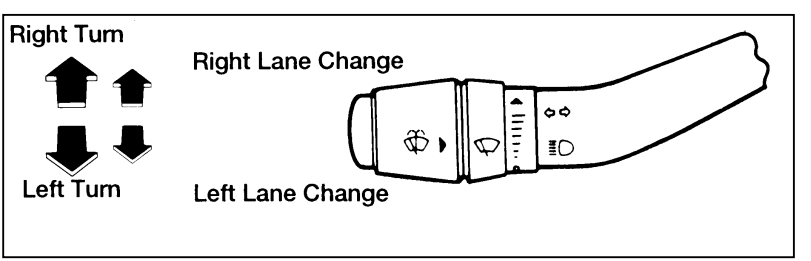

Turn signal lever and functions

If the turn indicator light in the instrument panel does not illuminate or remains on (doesn't flash) when you signal a turn, the turn signaling system is malfunctioning. Have this condition corrected as soon as possible, but make sure that you use the accepted hand signals in the meantime.

High Beams and Flashing the Lamps

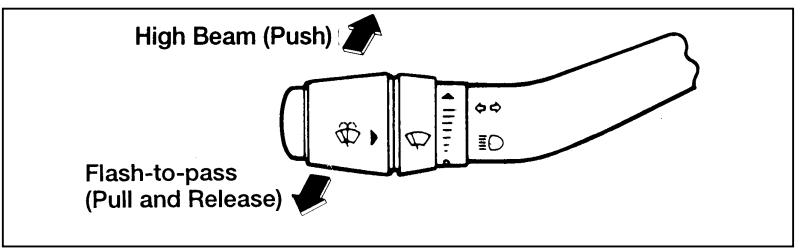

Headlamp high beam switch and turn signal lever on steering column

Windshield Wipers and Washer

To turn on the windshield wipers, the ignition key must be turned to the ON or ACC position.

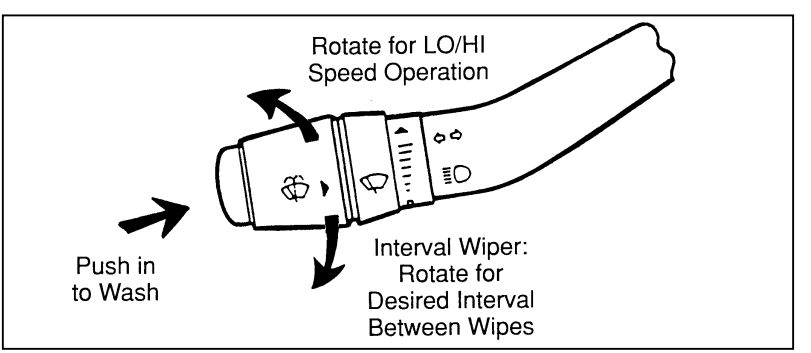

Interval wiper on turn signal lever

To set the interval wipers, rotate the knob at the end of the turn signal lever toward or away from the instrument panel to the interval operation you desire.

To clean the windshield, push in the end of the wiper knob for a single wipe. For a constant spray, keep the knob pushed in. After you release the knob, the wipers operate for two to three

cycles before turning off (if wipers were off) or returning to the interval setting selected.

Do not try to clean the windshield when the washer fluid container is empty or activate the washers at any time for more than 15 seconds continuously. This could damage the washer pump system.

NOTE: The addition of shields to the front of the vehicle, as used to deflect bugs, may also adversely affect the washer system from delivering fluid to the windshield. Devices such as bug shields are not recommended to be added to your vehicle.

⚠WARNING

In freezing weather, the washer solution may freeze on the windshield and obscure your vision. Always warm up the windshield with the defroster before you use the washer fluid. If you cannot see through the windshield clearly, it can increase the risk of being involved in a collision.

For information about refilling the washer fluid or replacing your windshield wiper blades, see *Windshield washer fluid and Wipers* in the Index.

Gearshift Lever (Automatic transmission only)

The gearshift lever on your Ranger is mounted on the steering column. On the end of the gearshift lever is the Overdrive On/Off button. For additional information about the gearshift lever and the Overdrive On/Off button, see the *Driving Your Ranger* chapter.

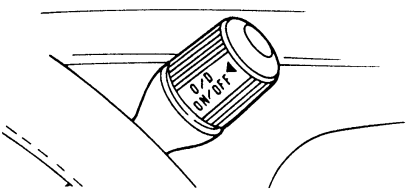

OVERDRIVE OFF Lamp

This lamp indicates the operating range of the transmission. This lamp illuminates when the O/D ON/OFF button is depressed. For additional information, refer to the *Warning Lights and Gauges* chapter.

O/D
OFF

Hazard Flasher

The hazard flasher is used to alert other drivers to hazardous situations.

The flashers will flash and the high-mount brakelamp will stay on steadily (not flash) with the brake pedal depressed.

The flashers work whether your vehicle is running or not. The flashers work for up to two hours when the battery is fully charged and in good condition without draining the battery excessively. If the flashers run for longer than two hours or if the battery is not fully charged, the battery power can be drained.

To use the hazard flasher:

1. Push in the flasher button; it will pop out and the lamps will begin to flash.
2. To stop the flashers, push in the flasher button again.

NOTE: The flasher button will be sticking up slightly higher when on than when off.

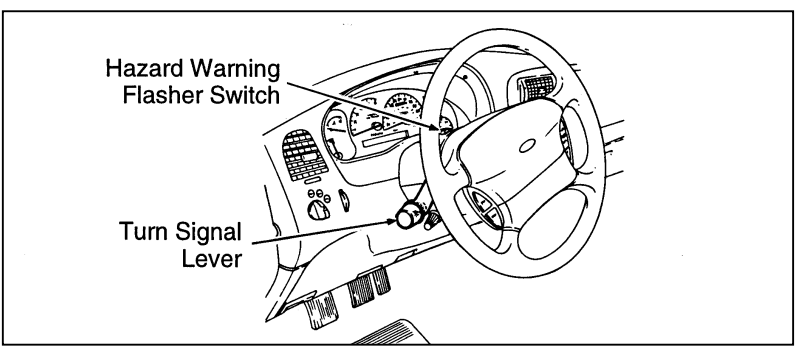

Hazard flasher

Horn

To sound the horn, press the center of the horn pad. Check the horn regularly to make sure it operates properly.

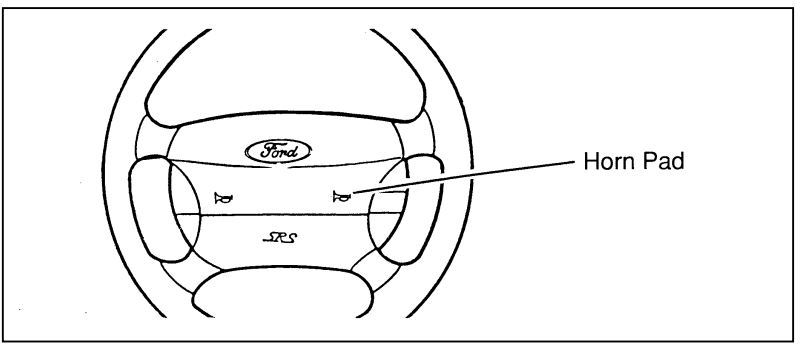

Horn location

Tilt Steering (If equipped)

⚠WARNING
Never adjust the steering column/wheel when the vehicle is moving. You could lose control of the vehicle and injure someone.

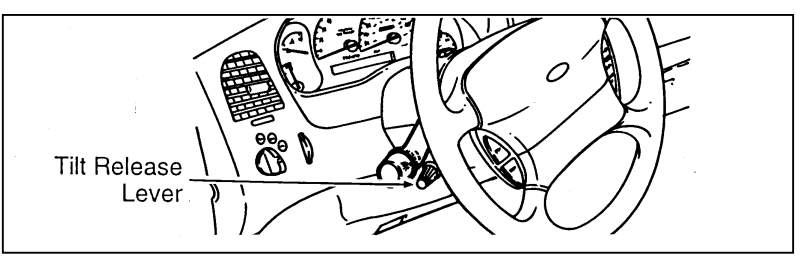

Tilt steering wheel lever

To change the position of the steering wheel, push the release lever under the steering column away from you. Tip the steering wheel to the desired position. Pull the lever back into place to lock the steering wheel.

Be sure the steering wheel locks in a notch. It is not infinitely adjustable. Do not adjust the steering wheel while the vehicle is in motion.

Speed Control (If equipped)

If your vehicle has speed control, you can automatically maintain a constant speed at or above 30 mph (50 km/h).

Use of radio transmitting equipment that is not Federal Communications Commission (FCC) or in Canada the Canadian Radio and Telecommunications Commission (CRTC) approved may cause the speed control to malfunction. Therefore, use only properly installed FCC (CRTC in Canada) approved radio transmitting equipment in your vehicle.

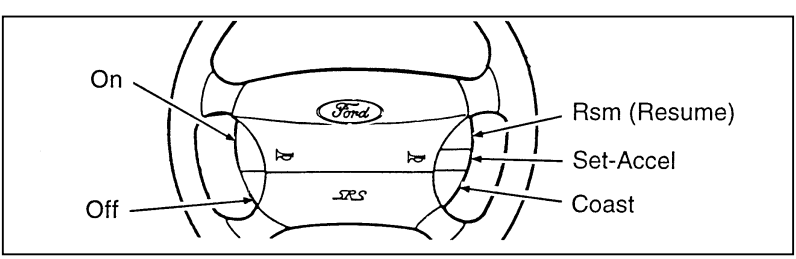

The speed control switches

To set the speed control:

1. Press and release the ON switch.
2. Accelerate to the desired speed above 30 mph (48 km/h) using the accelerator pedal.

3. Press SET ACCEL switch and release it immediately. This will set your speed. If you keep this switch pressed, your speed will continue to increase and will not be set until the switch is released.

4. Take your foot off the accelerator pedal. Your vehicle will maintain the speed you set.

If you drive up or down a steep hill, your vehicle may momentarily slow down or speed up, even though the speed control is on. This is normal.

NOTE: If your vehicle is equipped with an automatic transmission, and if your speed increases above your set speed while driving in (D) (Overdrive) on a downhill grade, you may want to shift to D (Drive) to reduce vehicle speed. This can be accomplished by pushing in the Transmission Control switch which is located on the end of the gearshift lever. The speed control cannot reduce the vehicle speed if it goes above your set speed on a downhill grade. For the best fuel economy during normal driving conditions, leave the shift select in (D) (Overdrive), or resume as soon as practical.

NOTE: If your vehicle is equipped with a 5 speed manual transmission, and if your speed increases above your set speed while driving in 5 (Fifth) gear on a downhill grade, you may want to shift to 4 (Fourth) gear to reduce vehicle speed. Depressing the clutch pedal cancels speed control, therefore speed control must be reset by pressing the SET ACCEL or RESUME switches. Speed control cannot reduce the vehicle speed if it goes above your set speed on a downhill grade.

⚠WARNING

Do not use the speed control in heavy traffic or on roads that are winding, slippery, or unpaved.

In mountainous areas, at higher elevations, or when pulling a trailer, the speed control may not be able to maintain the preset speed with the transmission in D (Overdrive).

If your vehicle comes with a 5-speed manual transmission, you may prefer to drive in 4 (Fourth) gear, in mountainous areas or at high altitudes, to improve speed control performance.

In order to downshift (with a manual transmission) with the speed control operating, you must press either the brake or clutch pedal long enough to disengage the speed control. Wait a second before depressing the clutch again and making the shift so that the speed control can fully return to the idle position.

⚠WARNING

Do not shift the transmission into N (Neutral) with the speed control on.

To maintain a preset speed under the above conditions, with electronically controlled transmissions — press the Transmission Control Switch (TCS). The indicator light will turn on and illuminate the words “O/D OFF.” This will cancel “Overdrive.” You can press the Transmission Control Switch (TCS) on or off at any speed. For the best fuel economy during normal driving conditions, press the Transmission Control Switch (TCS) to turn off the light. This allows overdrive operation.

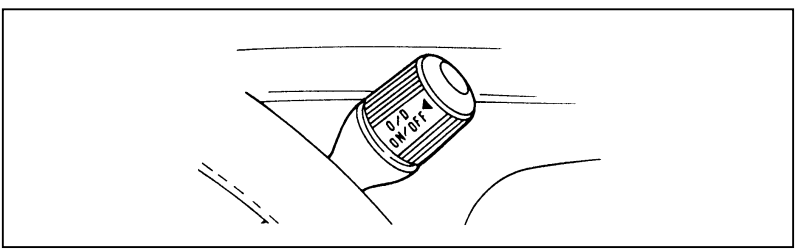

Transmission control switch

Accelerating With the Speed Control Operating

You can use the accelerator pedal to speed up momentarily. When you take your foot off the accelerator, the vehicle will return to the set speed.

Resetting the Speed Control

To reset the speed control to a **lower speed**, press and hold the COAST switch. Let your vehicle slow down to the desired speed and release the COAST switch.

Your vehicle has a “tap-down” feature that allows you to decrease your current speed in increments of 1 mph (1.6 km/h) by a momentary tap of the COAST switch. Multiple taps of the COAST switch will decrease your vehicle speed 1 mph (1.6 km/h) for each tap. For example, if you are currently set at 65 mph (104 km/h) and tap the COAST switch 5 times your vehicle speed will decrease and set at 60 mph (96 km/h).

To reset the speed control to a **higher speed**, you can follow any of these procedures:

- Accelerate to the desired speed, then press the SET ACCEL switch and release it immediately.
- Press and hold the SET ACCEL switch, then accelerate to your desired speed and release the switch.

- TAP-UP — This allows you to increase your current speed in increments of 1 mph (1.6 km/h) by a momentary tap of the SET-ACCEL switch. Multiple taps of the SET-ACCEL switch will increase your vehicle speed 1 mph (1.6 km/h) for each tap. For example, if you are currently set at 60 mph (96 km/h) and tap the SET-ACCEL switch 5 times your vehicle speed will increase and set at 65 mph (104 km/h).

Turning the Speed Control Off

You can cancel the speed control while you are driving.

- Press the OFF switch. The speed control is off. If you want to resume speed control, press the ON switch and reset the speed control by pressing the SET ACCEL switch.
- Press the brake or clutch pedal slightly. The speed control is suspended, but you can reset it by pressing SET ACCEL or return to the previous set speed with the RSM switch.

In addition, the speed control is turned off each time you turn the vehicle ignition off.

Driving uphill or on a steep grade

When the speed control is on, your vehicle may significantly drop speed when driving uphill, especially with a heavy load. If the speed drops more than 8 to 14 mph (15 - 25 km/h) the automatic speed control will, by design, be canceled. You may have to temporarily resume manual speed control while driving up a steep grade in order to maintain the speed you desire.

If the speed control “dropped out” after your climb is completed, the speed of your light truck can be reset with the SET ACCEL switch, or returned to the previous set speed with the RSM switch, as long as you are driving over 30 mph (50 km/h).

Resuming a Set Speed

If you press the brake pedal, the speed control is cancelled. You can return to the speed you set by using the RSM switch, as long as you did not press the OFF switch.

To resume the speed you had before, you must be driving at least 30 mph (50 km/h).

Press and release the RSM switch. Your vehicle gradually returns to the previously set speed and then maintains it.

⚠WARNING
If your vehicle has speed control, do not use it on slippery roads. You could lose control of your vehicle and could injure someone.

Your vehicle has a variety of features designed for your comfort, convenience and safety. Read this chapter to find out about standard and optional features.

Doors

Door Handles and Locks

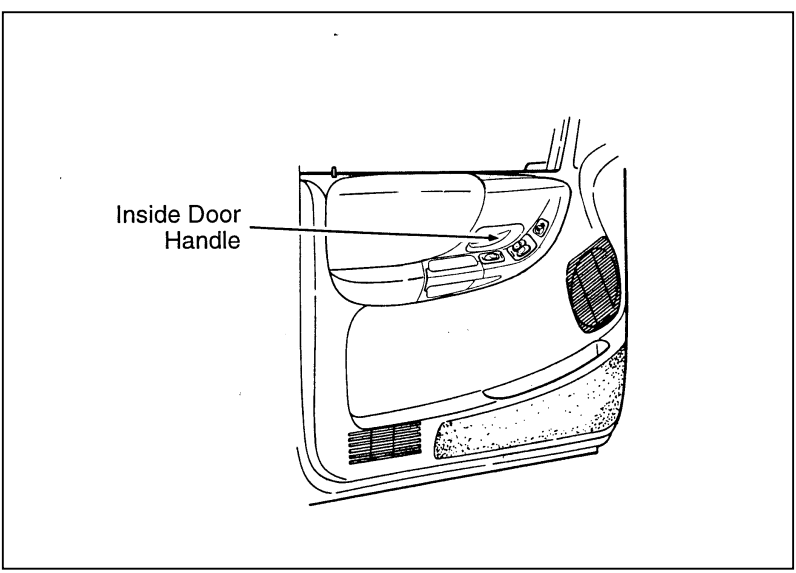

Inside handles

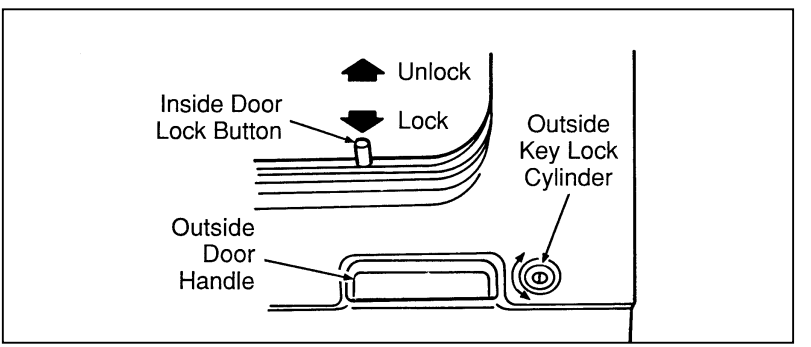

Outside handles and locks

Anti-theft front door lock knobs

Anti-theft lock knobs are designed to preclude unlocking the door by pulling up on the bullet type lock knob. To unlock and open the front door from the inside of the vehicle, pull on the inside door handle.

Tailgate

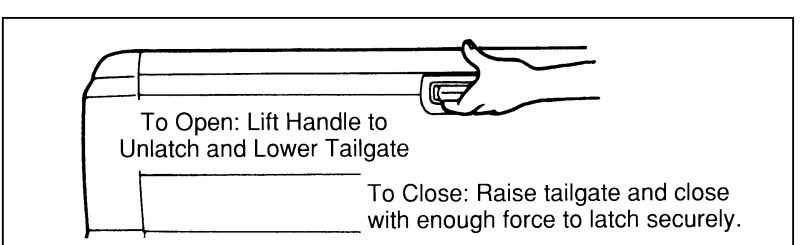

Tailgate operation

When open, the tailgate load should not exceed 500 lbs (227 kgs). If you want to load heavy items onto your vehicle, Ford recommends that you load them one at a time, directly on the bed floor to avoid damage to the tailgate or its supports.

To release the tailgate:

Open the tailgate as directed above, but support it to allow for slack in the cables at both sides. Use a coin or similar object to pry the spring clip (on each upper cable connector) past the head of the support screw. Doing so will allow you to center the wider opening in the connector over the screw head and disconnect it.

If you disconnect the upper end of each cable, you can lower the tailgate completely.

NOTE: Step bumpers or hitches may damage the tailgate if it is lowered completely.

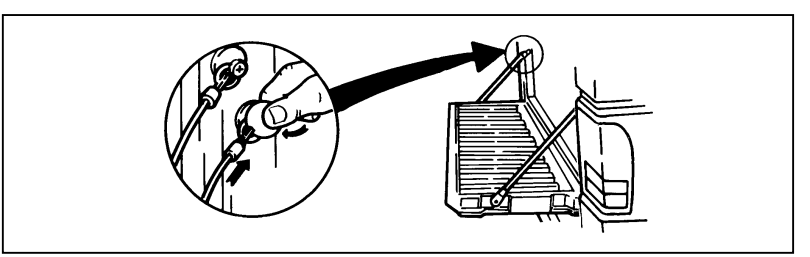

Releasing the tailgate

Tailgate removal

First release the tailgate as described above. Be sure to support the left side to prevent it from falling. Then raise the tailgate to a 45 degree angle (see the following illustration) and lift the right side of the tailgate off its hinge. You can now pull the left side of the tailgate away from the left hinge.

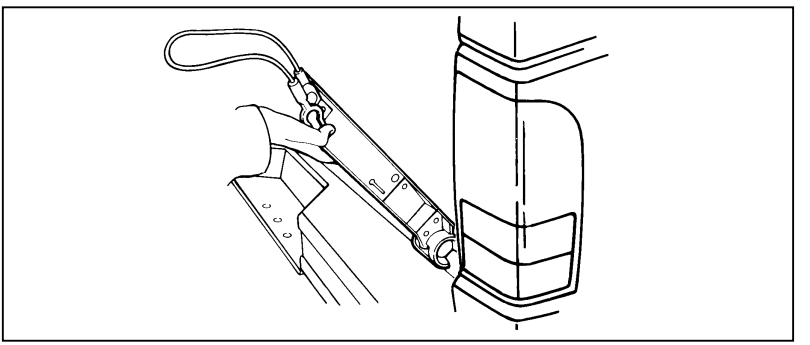

Tailgate removal

⚠WARNING
Do not drive your vehicle with the tailgate open unless there is a load holding it in place.

Power Door Locks (If equipped)

The power door lock switches are located in the front doors. To lock all doors push the switch marked . To unlock all doors push the switch marked .

The manual door locks will override the power door lock controls.

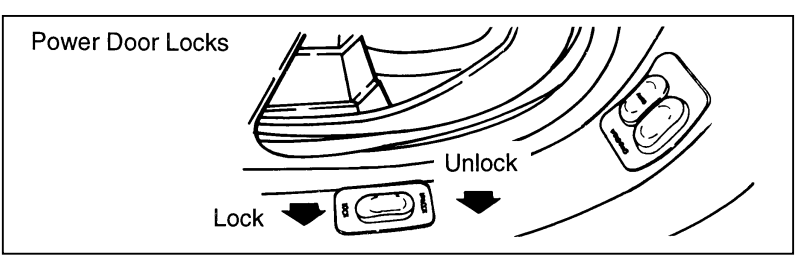

Power door lock controls

Remote Entry System (If equipped)

If your vehicle has the remote entry system, you can lock or unlock the vehicle doors without using a key. The remote also has a personal alarm feature. The buttons for the system are located on the hand held transmitter that came with your vehicle.

The system will work with up to four transmitters. Your vehicle came with one transmitter. Additional transmitters can be ordered from your dealer.

The remote entry features only operate with the ignition in the OFF position.

The remote entry transmitter

Unlocking the doors with the remote entry system

To unlock the driver's door, press the UNLOCK button.

To unlock the other door, press the UNLOCK button a second time, within five seconds after the first UNLOCK.

Locking the doors with the remote entry system

To lock both doors, press the LOCK button. This will also arm the factory installed Anti-Theft system.

If you would like a signal that the doors are being locked, press the LOCK button again within five seconds. If all doors are completely closed, the doors will lock again, the horn will chirp,

and the parking lamps will flash. If a door is open or ajar, the horn will give two short chirps warning you that a door is open.

Remote entry personal alarm

If you wish to activate the remote entry system personal alarm, press the PANIC button. This will honk the horn and flash the lights for approximately 2 minutes 45 seconds. You can turn it off by pressing the PANIC button again from the transmitter or by turning the ignition to the ON or ACCESSORY position.

When you use the remote entry UNLOCK or PANIC buttons, the illuminated entry system turns on the vehicle's interior lights for 25 seconds. You can turn these lights off with the remote entry LOCK button or by turning the ignition to the ON or ACCESSORY position.

This device complies with Part 15 of the FCC Rules. Operation is subject to the following two conditions: (1) This device may not cause harmful interference, and (2) This device must accept any interference received, including interference that may cause undesired operation.

Arming and Disarming the Alarm System with Remote Entry

Your Remote Entry System will automatically arm the factory installed Anti-Theft System when the doors are locked, and automatically disarm it when the doors are unlocked. The remote will also reset the anti-theft alarm (when the driver's door is unlocked or the PANIC button is pressed on a programmed remote entry transmitter) if it was triggered.

The remote entry system may not arm and disarm non-factory installed anti-theft systems.

Replacing the batteries

The remote entry transmitter is powered by two coin type three-volt lithium 2016 batteries (included) that should last for several years of normal use. If you notice a significant decrease in operating range, the batteries should be replaced. Replacement batteries can be purchased at most pharmacies, watch stores or at your Ford or Lincoln-Mercury dealer.

NOTE: The operating range of the remote entry system can also be affected by weather conditions (such as very cold temperatures) or structures around the vehicle (buildings, other vehicles, radio and TV towers, etc.). Typical operating range will allow you to be up to 33 feet (10 meters) away from your vehicle.

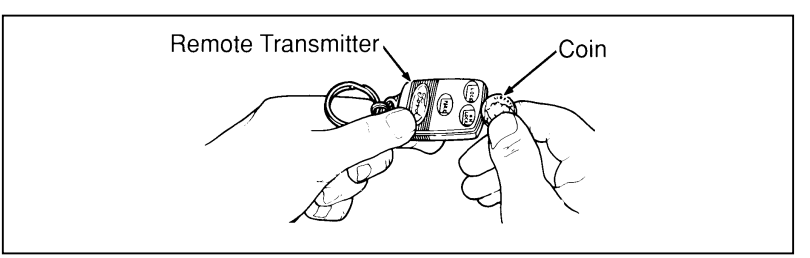

Opening the remote transmitter

The transmitter can be snapped apart to replace the batteries by twisting a thin coin between the two halves of the transmitter. DO NOT TAKE THE FRONT PART OF THE TRANSMITTER APART. When installing the new batteries, be sure to place the positive (+) side down as marked. Snap the two halves back together.

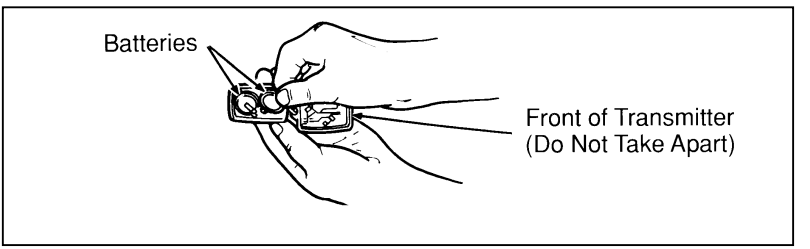

Replacing the batteries

Replacing lost transmitters

In the event a transmitter is lost, you should take your vehicle's transmitters to your dealer to have the remote entry system deprogrammed for the lost transmitter. This is necessary to prevent further unauthorized use of the lost transmitter.

You can also purchase additional transmitters (up to 4 transmitters can be used) from your dealer. You will need to take all your transmitters to the dealer so they can program them to the remote entry system all at the same time.

Illuminated Entry System (If equipped)

This system will provide illumination of the vehicle's interior courtesy lamps when either outside front door handle is pulled or when the remote entry system is used to unlock the door or sound the personal alarm. The system will automatically turn off after approximately 25 seconds or when the ignition is turned to the RUN or ACC position.

NOTE: The inside lights will not turn off if you have turned them on with the dimmer thumbwheel or if any door is open.

Battery Saver

When the ignition is turned off, the vehicle will turn off battery voltage to all of these lights after 40 minutes: glove box, engine compartment, overhead console, mirror, courtesy and interior (including cargo) lamps.

This will prevent draining of the battery if these lights have been left on inadvertently or if a door is not completely closed. Battery voltage to these lamps will be restored when the remote entry transmitter is used, any door is opened, or the ignition key is turned on again.

Anti-Theft Alarm System (If equipped)

When armed, this system helps protect your vehicle against break-ins or theft.

When an unauthorized entry occurs, the system triggers and will:

- flash the parking lamps and theft indicator lamp
- honk the horn
- disable the starting circuit to prevent the vehicle from being started

Arming the System

The system is ready to arm any time the ignition switch is turned OFF and the alarm is not triggered or sounding. Any of the following events will prearm the anti-theft system:

- Pressing the remote entry transmitter LOCK button to lock the doors (with the doors open or closed),
- Opening a door and pressing the power door lock button to lock the doors.

If a door is open, the anti-theft system is prearmed and waiting for all doors to close. The THEFT indicator in the instrument panel will light continuously while the system is prearmed.

- Close all doors

Once all doors are closed, if any were open, the system will begin a 30 second countdown to become armed. The 30 second countdown allows people who may still be in the vehicle time to exit without triggering the alarm. The THEFT indicator will glow steadily until the system is armed. When the system is armed, the THEFT indicator will begin to flash with short flashes every 2 seconds until the system is triggered or disarmed.

Remember, all doors must be fully closed for the anti-theft system to arm. If a door has been left open or ajar, and you press the remote entry transmitter twice to confirm the doors are locked, two short horn chirps will warn you that the anti-theft system is not arming.

When you get a single horn chirp by pressing the LOCK button twice within 5 seconds on your remote entry transmitter, you can be assured that all doors are locked and the anti-theft system is arming.

Disarming the System

An armed or activated system can be disarmed if you:

- Unlock the doors by pressing the remote entry transmitter UNLOCK button.
- Unlock any door with a key.
- Turn ignition to the ON or ACC position.
- Pressing the remote entry PANIC button will disarm the anti-theft system only when the anti-theft alarm is triggered and sounding.

When unlocking the vehicle with a key, turn the key all the way to the end of its travel or the system may not disarm.

NOTE: The flashing lights and honking horn will shut off automatically within 2 minutes 45 seconds after the system is triggered. It will trigger again if another intrusion occurs. However, the starter circuit remains disabled until the system is disarmed.

The anti-theft system is designed to work with the factory installed remote entry system. It may not work with other remote entry systems.

Windows

Operating the Windows Manually

The door windows are opened and closed by turning the handle crank.

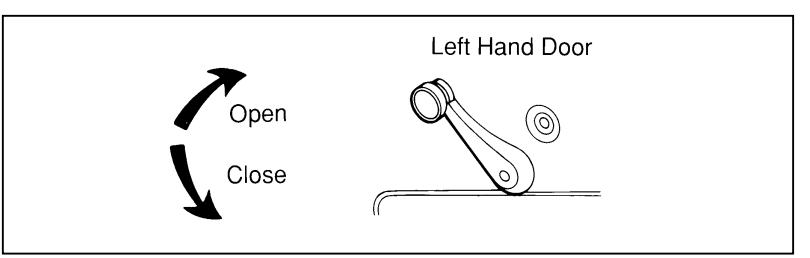

Manual window operation

Sliding rear window (If equipped)

The sliding rear window has only one sliding portion. Follow the operating instructions shown in the following illustration.

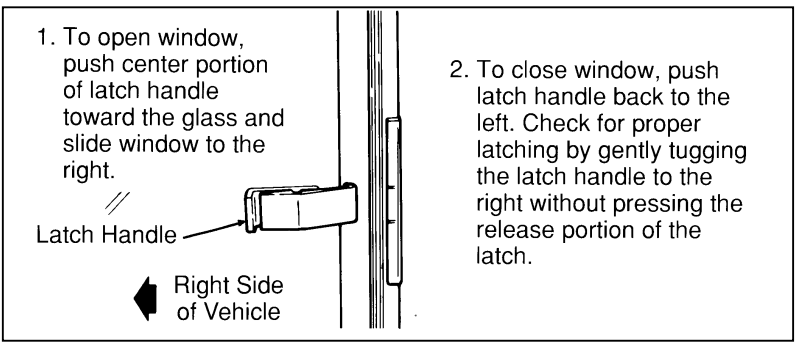

Sliding rear window operation

SuperCab quarter windows (if equipped)

To open the optional flip quarter windows on the Ranger SuperCab models, follow the operating instructions shown in the following illustration.

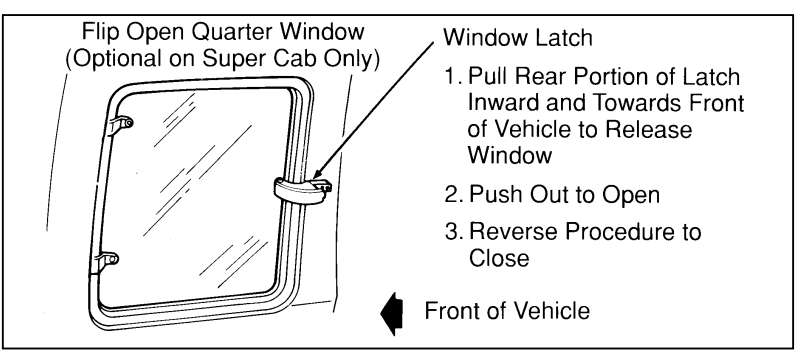

SuperCab flip open quarter window

Using the Power Windows (If equipped)

Each door has a power control that opens and closes the window on that door. The driver's door has a master control switch that operates all door windows. You must place the ignition switch in the ON or ACC position to use your power window controls.

⚠WARNING

Do not let children play with the power windows. They may seriously hurt themselves. Make sure occupants are clear of the window(s) before closing.

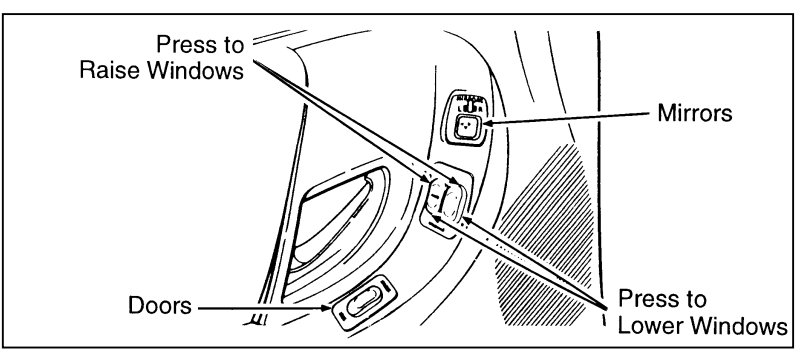

Master control switch

Seats

Head Restraints

If you use them properly, head restraints are intended to help protect your head and neck in a collision.

Adjust the head restraints so that the cushion contacts the back of your head when you move your head rearward.

If you have a front bench seat, you can adjust the front seat head restraints for your comfort and protection. The head restraints on other seats are not adjustable.

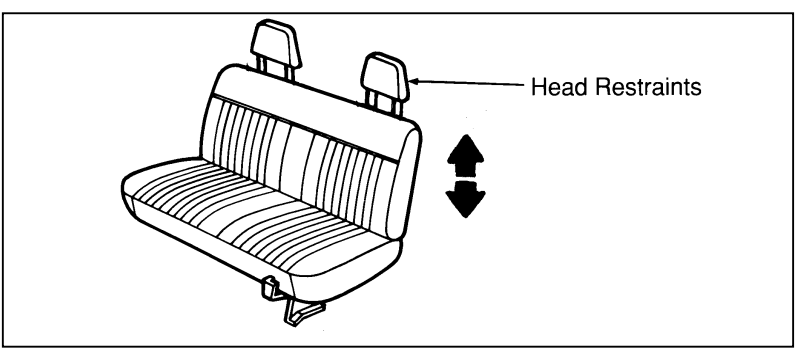

Adjusting the head restraint

Adjusting the Front Seat Manually

Regular Cab

To move the front seat forward or rearward:

1. Find the adjustment lever at the lower left corner of the front seat.
2. Push the lever to the left to unlock the seat.
3. Move the seat to the desired position.

4. Release the lever to lock the seat in its new position. Make sure the seat locks securely in place.

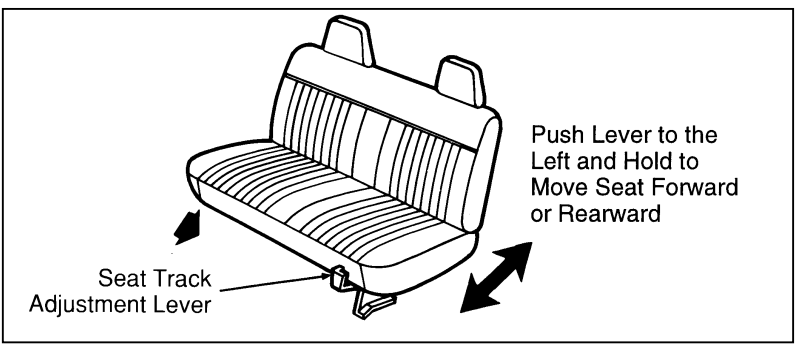

Adjusting the bench seat

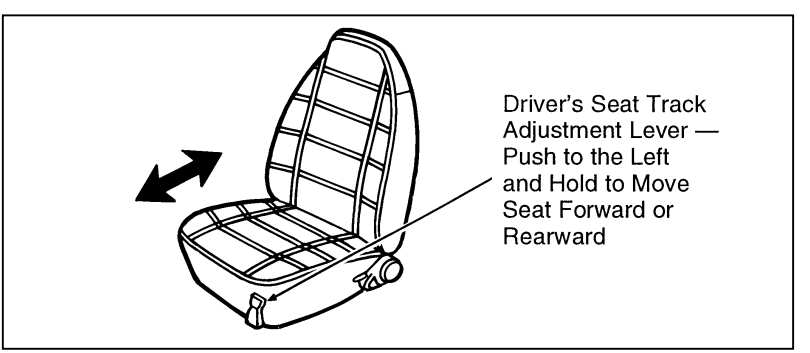

Adjusting the bucket seat

SuperCab

To move the front seat forward or rearward:

1. Find the adjustment bar at lower front of the front seat.
2. Lift bar upward to unlatch the seat.

3. Move the seat to the desired position.
4. Release the bar to latch the seat in its new position. Make sure the seat latches securely in place.

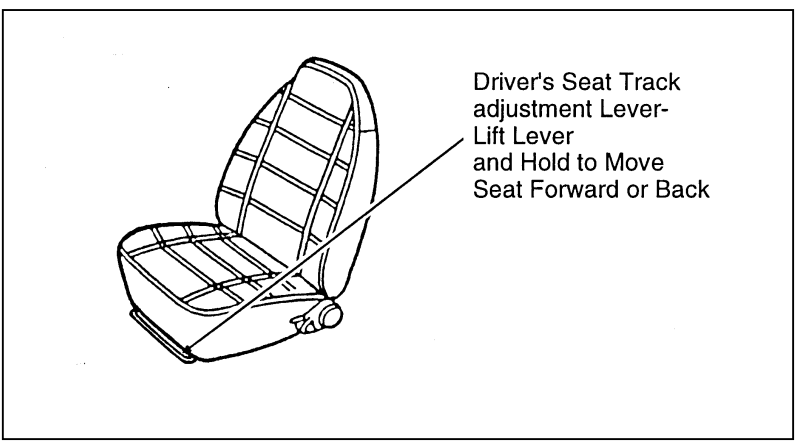

Adjusting the bucket seat

⚠WARNING

Never adjust the driver's seat or seatback when the vehicle is moving.

⚠WARNING

Do not pile cargo higher than the seatbacks to avoid injuring people in a collision or sudden stop.

⚠WARNING

To reduce the risk of serious injury in a collision, always drive and ride with your seatback upright and the lap belt snug and low across the hips.

⚠WARNING
To reduce the risk of serious injury in a collision, children should always ride with the seatback upright.

Reclining Bucket Seats (If equipped)

If your vehicle is equipped with the optional reclining bucket seat, you can tilt the seatback up to 30 degrees rearward.

1. On the side of the seat, find the handle for the recliner.
2. Lift the handle up and hold it in place.
3. Lean against the back of the seat and adjust it to the position you want.
4. Release the handle to lock the seatback in position.
5. To return the seatback to upright position, lift the handle and lean forward. Then release the handle.

Lifting the recliner handle of an unoccupied seat will allow the seat back to fold forward for access to the rear. Pushing the seat back with the release handle raised returns the seat back to the upright position.

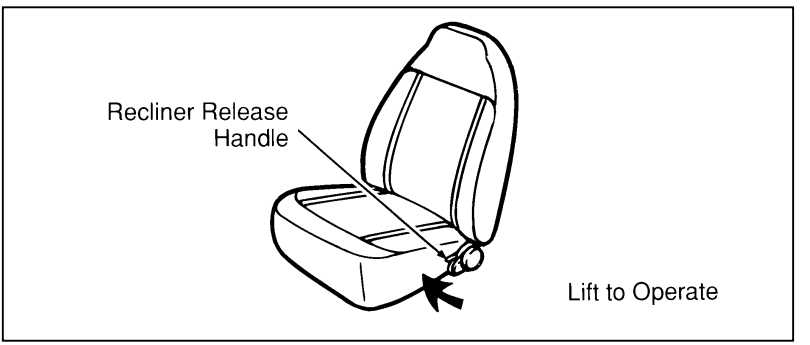

Reclining bucket seat

Center Facing Jump Seat — SuperCab Only

To open the seat, pull inboard and down on the seat handle. To stow the seat, pull seat bottom back to the fully upright position. The jump seats should be kept in the stored position for easier access to the rear cab area.

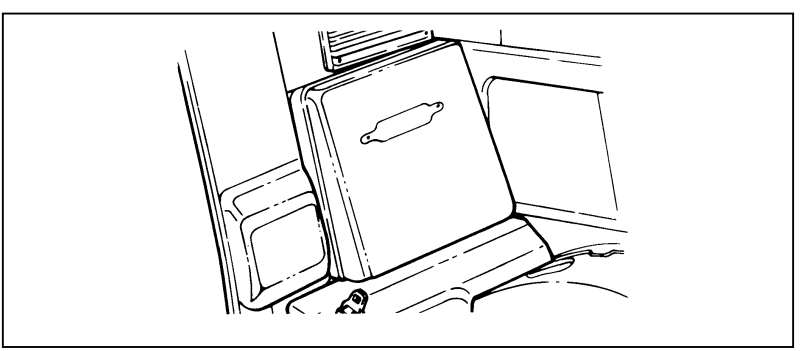

Center facing jump seat in stowed position

⚠WARNING
Do not install a child seat in a center facing jump seat.

Tilt Slide Seat (If equipped)

SuperCab only

With the front seatback tilted forward, the tilt slide seat can be moved to provide additional entry space to access the rear seat compartment of the vehicle.

To operate the tilt slide seat:

1. Lift the seatback release lever on the outboard side of the seat cushion to unlock the slide mechanism and seatback.
2. Push the seat assembly forward to provide entry space to the rear seat compartment of the vehicle.

⚠WARNING
Do not place objects behind or under the front seat which can prevent the seat from returning to the locked position.

⚠WARNING
A seatback which is folded forward even a small degree may not lock properly in the event of a sudden stop or collision.

3. With the seatback still forward, using the seat cushion push the seat rearward to the desired position and return the seatback to its upright position. This will lock the seat track.

NOTE: Whenever the seatback is returned to the upright position, the seat will lock in that seat position.

NOTE: The seat can no longer be moved rearward when in its latched position.

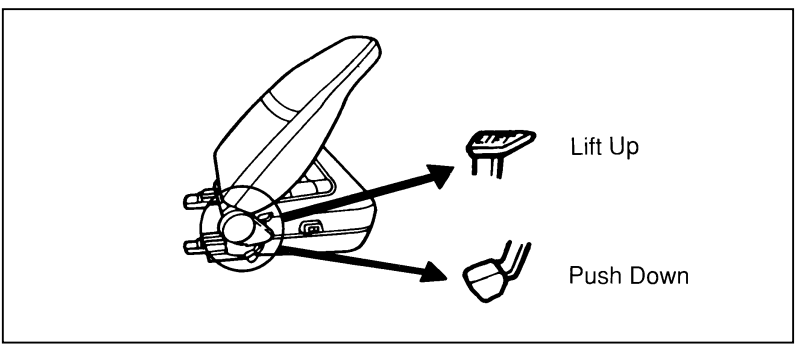

Tilt slide seat

Prior to operating the vehicle, check to ensure that the seat assembly is locked by pushing or pulling the seat forward or rearward. If seat does not lock, repeat steps 2 and 3.

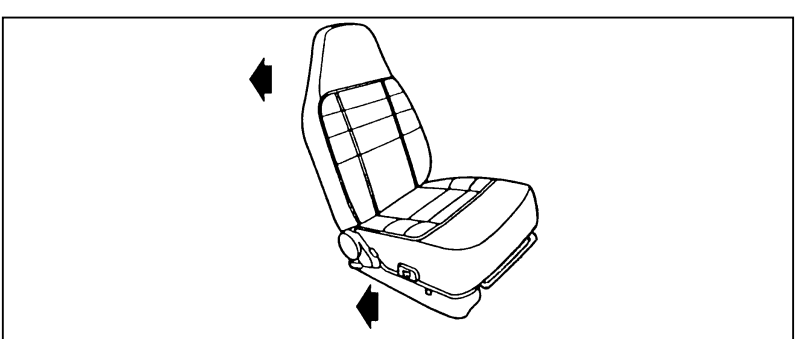

Locking tilt slide seat

To operate the seat adjuster:

4. To adjust the seats forward or rearward, locate the release bar at the lower front area of the seat cushion. Lift the release bar and hold until the desired seat position is obtained, then release the bar to relock the seat.

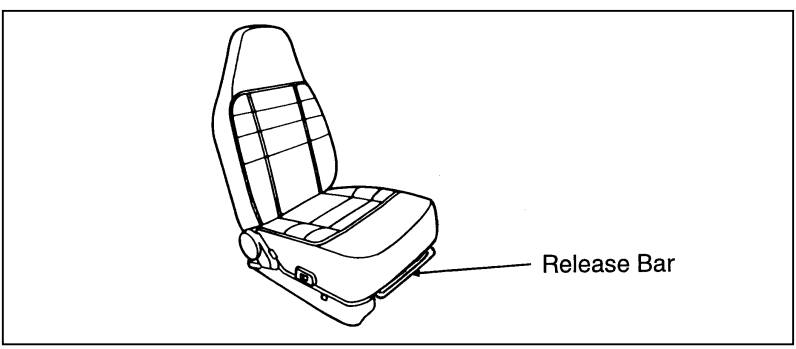

Adjusting seat

60/40 Split Front Bench (If equipped)

The seat back release operates the same as the basic bucket seat.

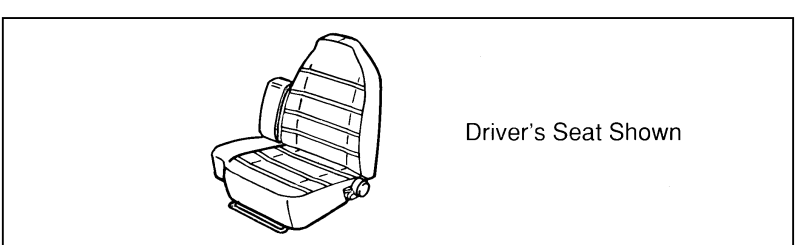

60/40 split front bench

Using the Power Seats (If equipped)

If your vehicle has the power seat option, you can adjust it in several directions. The controls are on the outboard side of the seat.

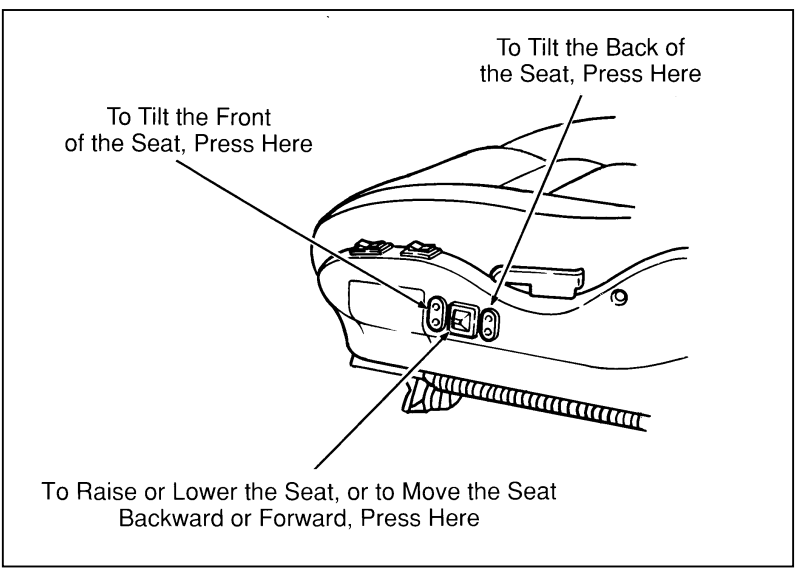

The power controls on the driver's seat

Using the Power Lumbar Support and Side Bolsters (If equipped)

Inflating the lumbar support and side bolsters

If your vehicle is equipped with this option you can inflate/deflate the lumbar support pad in the seat back and inflate/deflate the side bolster pads.

To inflate the bolster pads, push the "+" end of the front rocker switch. To deflate the bolster pads, push the "–" end of the switch.

To inflate the lumbar support pad, push the “+” end of the rear rocker switch. To deflate the lumbar support pad, push the “–” end of the switch.

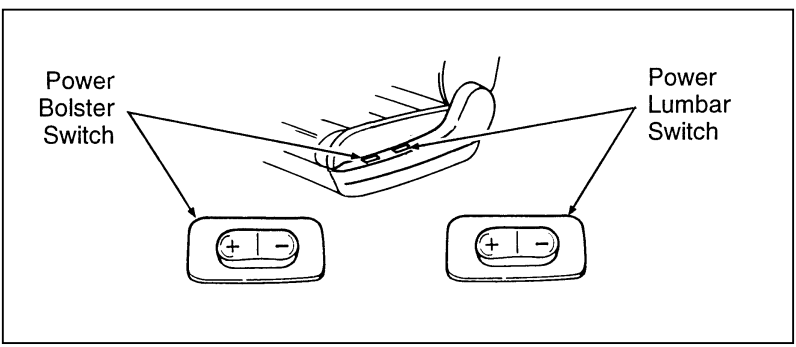

Power lumbar and side bolsters switch — sport bucket seat

Cleaning the Seats

Fabric

Remove dust and loose dirt with a whisk broom or a vacuum cleaner. Remove fresh spots immediately. Follow the directions that come with the cleaner.

NOTE: Before using any cleaner, test it on a small, hidden area of fabric. If the fabric’s color or texture is adversely affected by a particular cleaner, do not use it.

Mirrors

Dual Electric Remote Control Mirrors (If equipped)

To adjust the remote controlled side mirrors:

1. Find the control switch in the driver's door panel.
2. Select the right or left mirror by moving the selector switch to the right or left.
3. Move the control knob in the direction you want to move the mirror.
4. Return the selector switch to the middle position to keep the mirror in place.

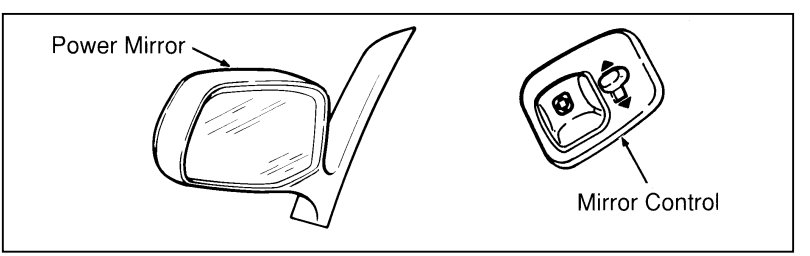

Power mirror control

Do not clean the plastic housing of any electric mirror with gasoline or other petroleum-based cleaning products.

⚠WARNING
The side view mirror on the right makes objects appear smaller and farther away than they actually are.

Console (If equipped)

Your vehicle may have a full console. The full console has the features shown in the illustration below.

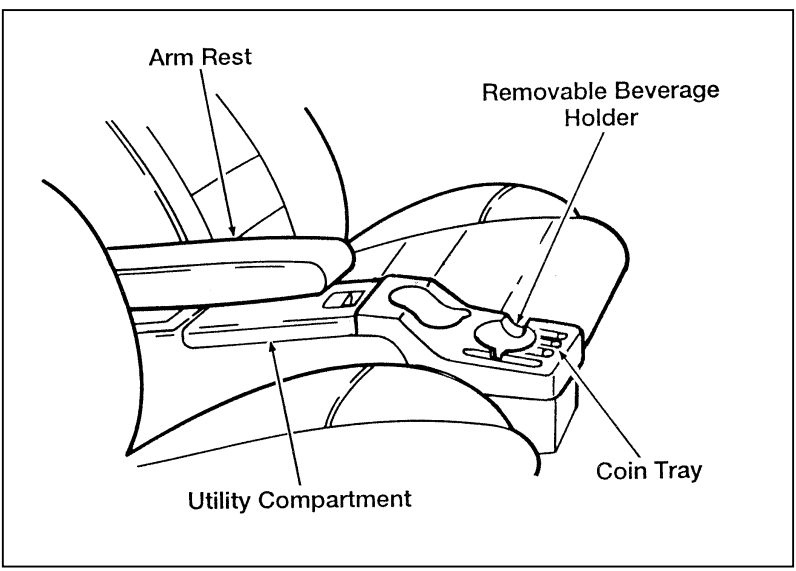

The features on the console — bucket seats

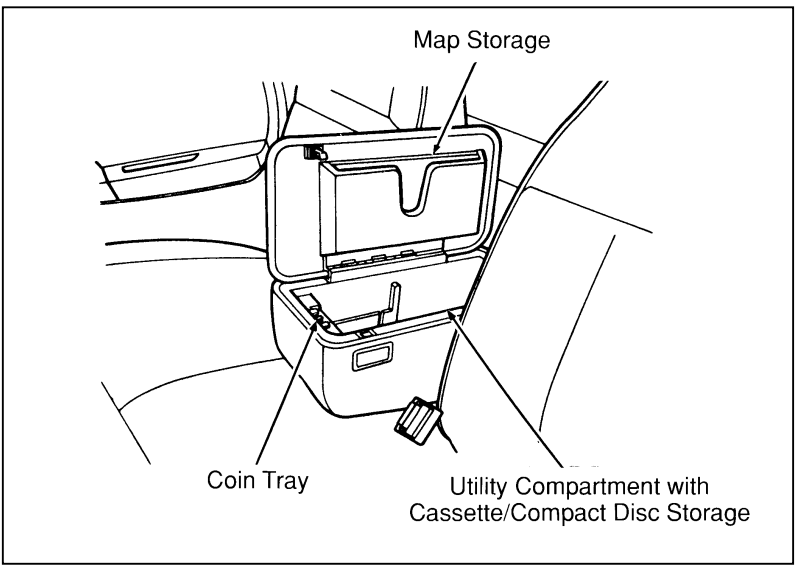

Storage armrest — 60/40 split bench

Floor Mounted Cupholders (If equipped)

If your vehicle has a bench seat, you may have floor mounted cupholders. On manual transmission vehicles, the cupholders are located on the floor on either side of the gearshift lever. On automatic transmission vehicles a removable consolette is located on the floor. The consolette may be removed when the center bench seat position is occupied.

The inside of the cupholders can be adjusted to various heights to accommodate different size cups. They can also be removed to allow access and cleaning of the rubber padding at the bottom of the cupholder.

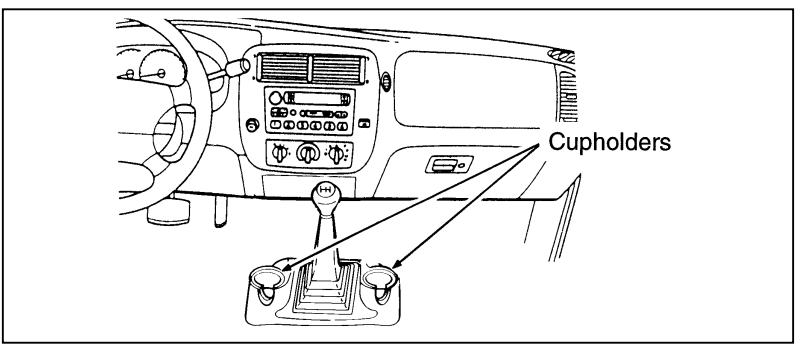

Floor mounted cupholders — manual transmission

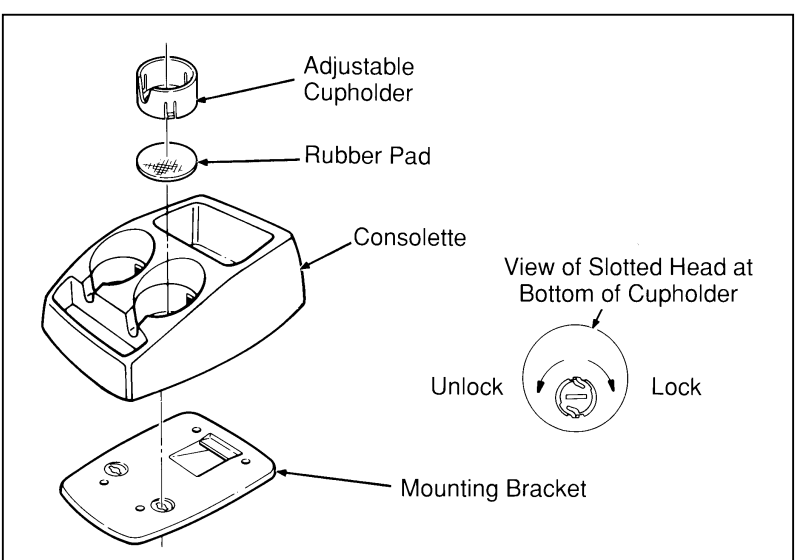

Floor mounted cupholders — automatic transmission

To remove the automatic transmission consolette:

1. Pull the adjustable portion of each cupholder from the consolette.
2. Remove the rubber pad at the bottom of each cupholder.
3. Using a quarter, turn the slotted head at the bottom of each cupholder 90˚ (one quarter turn).
4. Lift the consolette from the floor and secure it in a safe place.

Power Point Electrical Outlet

The power point outlet should be used in place of the cigarette lighter for optional electrical accessories.

NOTE: Do not plug optional electrical accessories into the cigarette lighter. Use the power point.

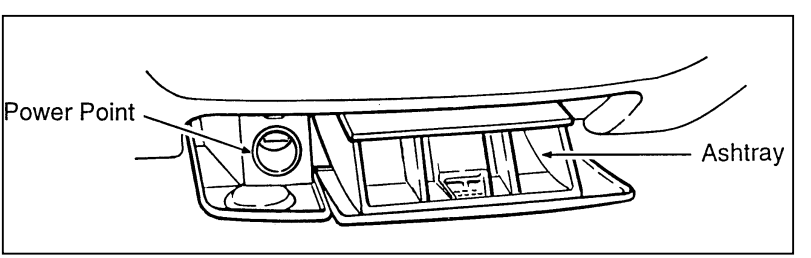

Power point electrical outlet

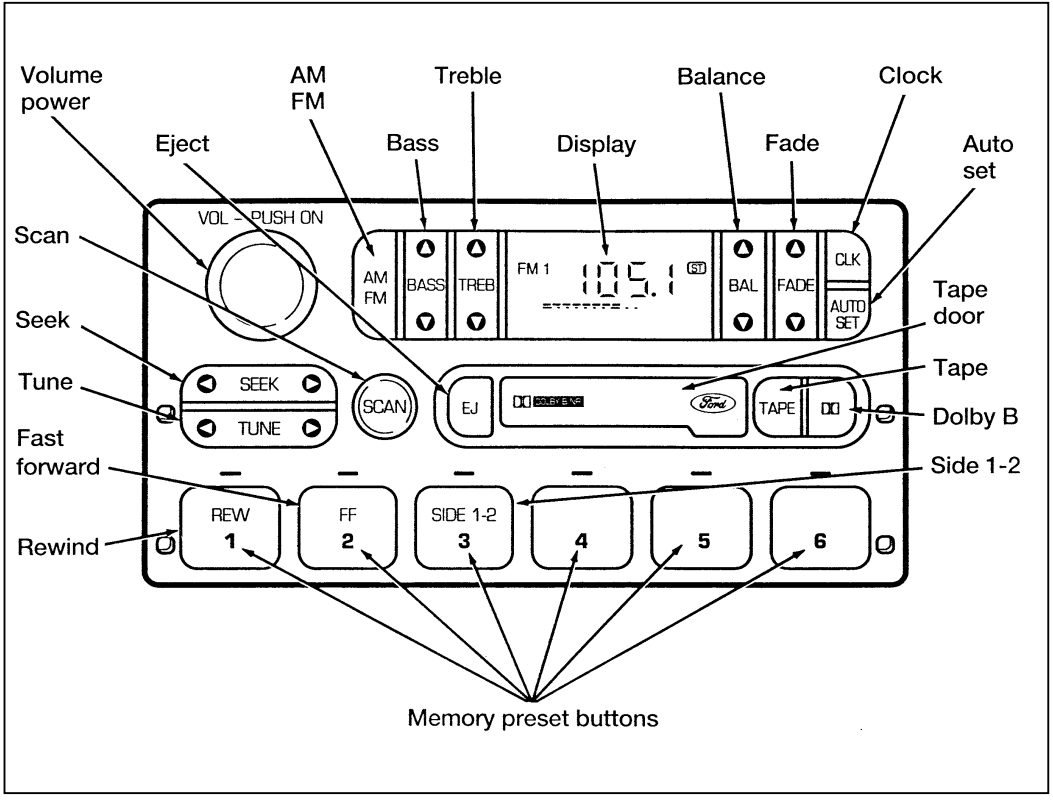
Volume power
Eject
AM FM
Bass
Treble
Display
Balance
Fade
Clock
Auto set
Scan
Seek
Tune
Fast forward
Rewind
Tape door
Tape
Dolby B
Side 1-2
Memory preset buttons
VOL – PUSH ON
AM FM
BASS
TREB
FM 1
ST
BAL
FADE
CLK
AUTO SET
SEEK
TUNE
SCAN
EJ
TAPE
REW
FF
SIDE 1-2
1
2
3
4
5
6

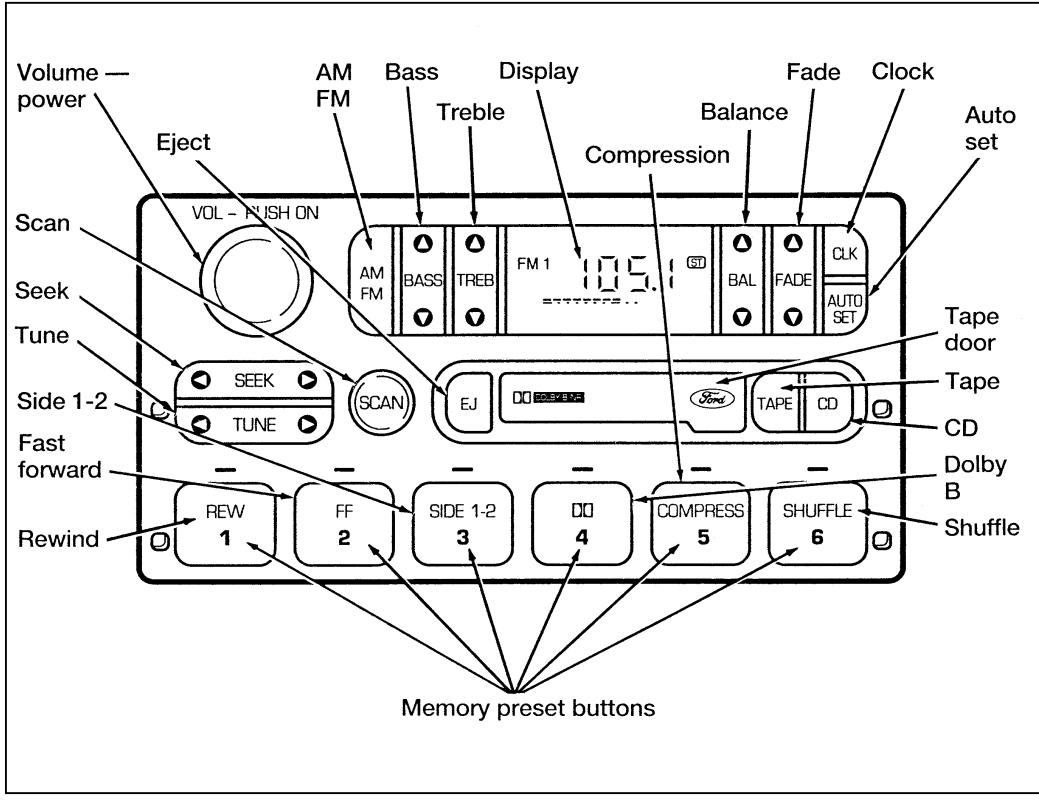
Volume — power
Eject
AM FM
Bass
Treble
Display
Compression
Balance
Fade
Clock
Auto set
Scan
Seek
Tune
Side 1-2
Fast forward
Rewind
Tape door
Tape
CD
Dolby B
Shuffle
Memory preset buttons
VOL – PUSH ON
AM FM
BASS
TREB
FM 1
ST
BAL
FADE
CLK
AUTO SET
SEEK
TUNE
SCAN
EJ
TAPE
CD
REW 1
FF 2
SIDE 1-2 3
4
COMPRESS 5
SHUFFLE 6

Premium Stereo Cassette and Stereo Cassette with CD DJ

Using the Controls on Your New Radio

How to turn the radio on and off

Press the "VOL/PUSH" knob to turn the radio on. Press again to turn it off.

How to adjust the volume

Turn the "VOL/PUSH" knob clockwise to increase the volume and counterclockwise to decrease the volume. Bars illuminate in the display to show relative volume level.

NOTE: If the volume level is set above a certain listening level when the ignition switch is turned off, when the ignition switch is turned back on, the volume will come back to a "nominal" listening level. However, if the radio power is turned off, the volume will remain in the position it was set at when radio power was switched off.

Selecting the AM or FM frequency band

Push the "AM/FM" button to select the desired frequency band or to stop/store cassette tape (when in cassette mode). Pushing the button more than once will alternate between AM, FM1 and FM2. These functions are used with the station memory buttons described under *How to tune radio stations.*

How to tune radio stations

There are four ways for you to tune in a particular station. You can use the “TUNE”, “SEEK”, “SCAN” or the memory buttons.

■ Using the “TUNE” function

You can change the frequency up or down one increment at a time by pressing and releasing either the left (◀) or right (▶) side of the “TUNE” button. To change frequencies quickly, press and hold down either the right or left side of the button.

Manual tuning adjusts your radio to any allowable broadcast frequency, whether or not a station is present on that frequency. (See *All About Radio Frequencies* in this section.)

■ Using the “SEEK” function

This feature on your radio allows you to automatically select listenable stations up or down the frequency band. Press the right (▶) side of the “SEEK” button to select the next listenable station up the frequency band. Press the left (◀) side of the button to select the next listenable station down the frequency band. By pressing and holding the button, listenable stations can be passed over to reach the desired station.

■ Using the “SCAN” function

Pressing the “SCAN” button will begin the scan mode up the frequency band, stopping on each listenable station for approximately five seconds.

To stop the scan mode on the presently sampled station, press the “SCAN” button again.

■ Setting the station MEMORY PRESET buttons

Your radio is equipped with 6 station memory buttons. These buttons can be used to select up to 6 preset AM stations and 12 FM stations (6 in FM1 and 6 in FM2)

Follow the easy steps below to set these buttons to the desired frequencies:

1. Select a band, then select a frequency.
2. Press one of the memory preset buttons and hold the button until the sound returns. That station is now held in memory on that button.
3. Follow the two steps above for each station memory preset button you want to set.

■ Using the AUTOSET feature

With AUTOSET, you can continually set strong stations into your memory buttons without losing your originally set stations.

Press the “AUTOSET” button once. Your radio will set the first six strong stations of the band you are in (AM, FM1, or FM2) into the memory buttons. The display will show “AUTO”, then run through the frequencies setting the memory buttons.

NOTE: If there are fewer than five strong stations in the frequency band, the remaining unfilled buttons will store the last strong station detected on the band.

When all stations are filled, the radio will begin playing the station stored in memory button 1.

To deactivate the Auto Memory Store mode and return to manually-set memory button stations, press the “AUTOSET” button. Display will show “AUTO” then “OFF”.

Adjusting the tone balance of your radio

- Increasing or decreasing bass response

  Press the top (▲) of the “BASS” button to increase bass; press the bottom (▼) of the “BASS” button to decrease bass.

- Increasing or decreasing treble response

  Press the top (▲) of the “TREBLE” button to increase treble; press the bottom (▼) of the treble button to decrease treble.

- Adjusting speaker balance

  Balance control allows you to adjust the sound distribution between the right and left speakers. Press the top (▲) of the “BAL” button to shift the sound to the right speakers, and press the bottom (▼) of the “BAL” button to shift the sound to the left speakers.

- Adjusting speaker fader

  Fade control allows you to adjust the sound distribution between the front and rear speakers. Press the top (▲) of the “FADE” button to shift the sound to the front speakers, and press the bottom (▼) of the “FADE” button to shift the sound to the back speakers.

NOTE: **Illuminated bars in the display show relative levels of bass and treble, and positions of speaker balance and fader functions (left to right, front to rear).**

Using the Controls of Your Cassette Tape Player

NOTE: Radio power must be on to use the cassette tape player.

How to insert a tape

Your cassette tape player is equipped with power loading. Once you insert a tape and push slightly (with the **open edge to the right**), the loading mechanism draws the tape the rest of the way in and play will begin after a momentary tape tightening process. Display indicates “TAPE” while tape is playing.

NOTE: A cassette tape can be loaded with the ignition on whether or not the radio power is on. However, with radio power off, the cassette tape is loaded and stored.

How to locate a desired track on the tape

There are four ways to quickly locate a desired selection on the tape. You can use the fast forward, rewind, “SEEK” or “SCAN” function. Following are brief descriptions of each.

- Fast forwarding the tape

  To fast forward the tape, press the “FF” button. The radio will begin playing until fast forward is manually stopped (by pushing the “TAPE” button) or the end of the tape is reached.

  At the end of the tape, the direction automatically reverses and plays the other side of the tape.

- Rewinding the tape

  To rewind the tape, press the “REW” button. The radio will begin playing until rewind is manually stopped (by pushing the “TAPE” button) or the beginning of the tape is reached.

■ Using the “SEEK” function with your cassette tape player

While in the tape mode, push the right (▶) side of the “SEEK” button to seek forward to the next selection on the tape. Push the left (◀) side to seek the previous tape selection.

■ Using the “SCAN” function with your cassette tape player

Press the “SCAN” button to begin the forward scan mode on the tape currently playing, stopping on each tape selection for approximately an eight-second sampling (display indicates “SC”).

To stop the scan mode on the presently sampled tape selection, press “SCAN” a second time.

■ How to change the side of the tape being played

The alternate side of the tape can be selected by pressing the “SIDE 1-2” button.

How to eject the tape

To stop the tape and eject the cassette, press the “EJ” button. The radio will resume playing if the radio power is on. The tape cartridge can be ejected with radio power (and/or ignition) on or off.

How to switch from tape to AM/FM mode

Press the “AM/FM” button to stop the tape player and resume radio play.

Using the Dolby® B noise reduction feature

NOTE: Noise reduction system manufactured under license from Dolby Labs Licensing Corporation. “Dolby” and double-D symbol are trademarks of Dolby Laboratories Licensing Corporation.

Push the DD button to activate Dolby B Noise Reduction. Push again to deactivate.

Tips on Caring for the Cassette Player and Tapes

In order to keep your cassette tape player performing the way it was meant to, read and follow these simple precautions:

- Using a Ford Cassette Cleaning Cartridge to clean the tape player head after 10-12 hours of play will help maintain the best playback sound and proper tape operation.
- Only cassettes that are 90 minutes long or less should be used. Tapes longer than 90 minutes are thinner and subject to breakage or may jam the tape player mechanism.
- Protect cassettes from exposure to direct sunlight, high humidity and extreme heat or cold. If they are exposed to extreme conditions, allow them to reach a moderate temperature before playing.
- If a tape is loose inside the cassette, tighten it before playing by putting your finger or a pencil into one of the holes and turning the hub until the tape is tight.
- Loose labels on cassette tapes can become lodged in the mechanism. Remove any loose label material before inserting cassette.
- Do not leave a tape in the cassette tape player. High heat in the vehicle can cause the cassette to warp.

Clock Operation

How to view the clock mode

Press the “CLK” button to display time. The time will continue to be displayed until a radio or tape function is chosen. After approximately 10 seconds, the time will again appear in the display. To display radio or tape information only, press the “CLK” button a second time.

NOTE: With the ignition off, the clock will display for approximately 5 seconds once the “CLK” button is depressed and released.

How to set the clock

1. Turn the radio on.
2. Press and hold the “CLK” button, press the right (▶) side of the “SEEK” button to increase hours. Press the left (◀) side of the button to decrease hours. Press the right (▶) side of the “TUNE” button to increase minutes. Press the left (◀) side of the button to decrease minutes.

NOTE: The clock displays 12-hour time with no AM/PM indications.

Ford 6-CD Changer (If equipped)

The Ford Ranger (Regular Cab) 6-CD Changer is mounted behind the driver's seat. The Ford Ranger (SuperCab) 6-CD Changer is mounted on the floor near the center of the rear cab wall. Both changers are controlled with buttons on the Audio System.

Unit Loading Instructions

1. Open Compact Disc Changer unit by sliding door rearward (Figure 1).

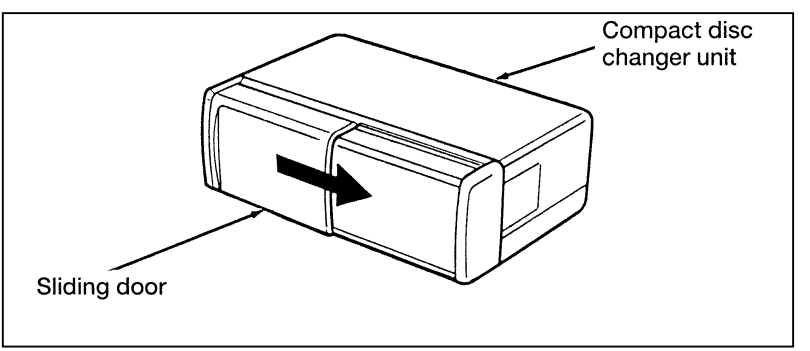

Figure 1

2. Push the "▲" button to eject the disc "magazine" (holds 6 discs) (Figure 2).

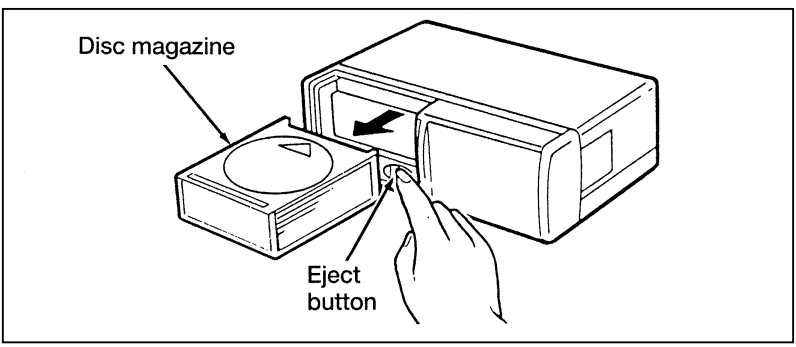

Figure 2

3. Load discs into the disc magazine slots (numbered 1 through 6) one at a time with labeled surfaces upward, starting with bottom slot number 1 (Figure 3).

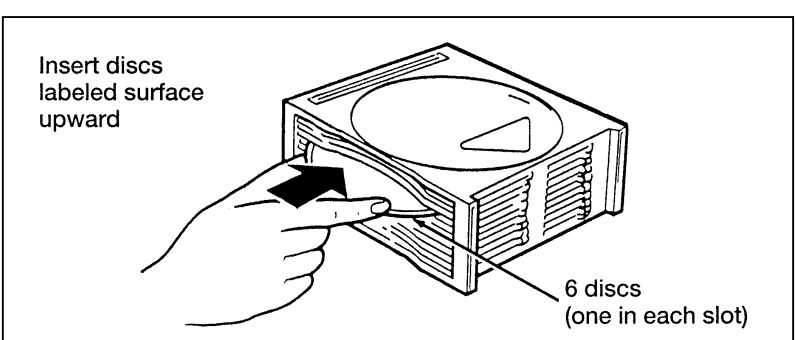

Figure 3

4. Insert loaded disc magazine into chamber unit with the arrow on top of the disc magazine pointing toward the changer (Figure 4). **Make sure magazine is fully inserted into changer**.

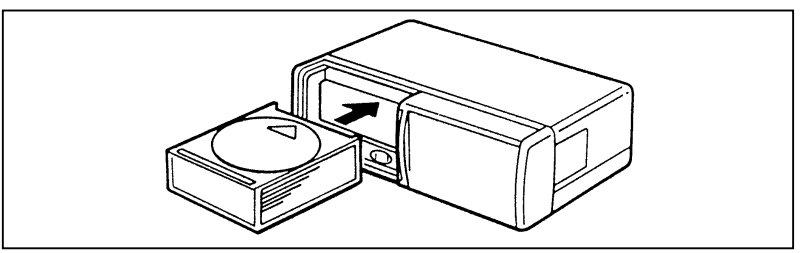

Figure 4

NOTE: To remove one or more compact disc(s) from the disc magazine, push the corresponding lever(s) to the back. Disc(s) will partially come out for easy removal.

5. Close unit by sliding changer panel door to the left.

The Compact Disc Changer unit is now ready to play using the controls of your Audio System.

How to Operate the Ford 6-CD Changer Using the Controls on the Radio (Premium Audio Systems only)

If your vehicle is equipped with the Ford 6-CD Changer System, you can operate it through the controls of your Premium Audio System.

How to begin CD Changer play

Press the “CD” button to begin CD play. The 6-CD Changer will automatically begin playing the first track (selection) of the first disc loaded in the unit. The display will indicate “cd-dd” for disc number and track number and then display “TT-tt” for track number and the “dd-tt” for current disc and track number.

If the CD Changer is empty, “NO” and “DISC” will flash in the display and radio play will continue.

How to change the disc being played

When in the CD mode, you can change discs by pressing the right side (▶) of the “TUNE DISC” button (to select the next discs) or the left side (◀) of the “TUNE DISCS” button (to select previous discs). Play will begin on the first track of the selected disc.

If either side of the button is pressed and held, the CD Changer will continue fast-forwarding or reversing through the discs in the disc magazine. During these functions, the display will indicate the disc number.

How to change the track being played

There are two ways to change the track being played. You can use the “SEEK” or “SCAN” buttons.

- Using the “SEEK” function with your CD-Changer

  Press the right (▶) side of the “SEEK” button to seek forward to the next track of the current disc. After the last track has been completed, the CD player automatically changes to the next disc.

  Press the left (◀) side of the “SEEK” button to seek to the previous track on the current disc.

- Using the SCAN function with your CD Changer

  Press the “SCAN” button to move forward to the next track. Approximately an eight-second sampling of the track will be played before moving to the next track. The display will indicate the disc and track number (dd-tt). At the end of the disc, the CD Changer automatically changes to the next disc.

  To end the scan mode, press the “SCAN” button a second time.

Operating the CD Compression feature

Because of the wide dynamic range of Ford's 6-CD Changer System, soft passages may be difficult to hear under certain driving conditions while maintaining a reasonable volume level in the louder passages. The compression feature will bring these soft and loud passages closer together for a more consistent listening level.

To turn the compression on, press the "COMPRESS"/#5 button. When the compression feature is activated, the display will indicate "C".

Operating the Shuffle feature

While in the CD mode, pressing the "SHUFFLE"/#6 button will randomly select a track from the disc currently being played. The display will indicate "SHF" followed by the disc and track number (dd-tt).

The CD Changer will continue to randomly select tracks for play until the shuffle feature is turned off by pressing the "SHUFFLE" button a second time.

How to stop CD play

While in the CD mode, press the "AM/FM" button to stop CD play and resume radio play. Also, loading a cassette into the cassette deck will stop CD play and begin cassette play.

CD Error Messages

Your system is equipped to diagnose certain problems you may experience. The error codes are:

— **CD E1** — Mechanism error.

— **CD E2** — Focus error.

— **BAD CD** — Disc unreadable.

— **TOO HOT** — Mechanism over 167˚ Farenheit, allow to cool before playing.

— **NO CD** — Empty slot or magazine.

— **NO DJ** — CD Changer not connected or not communicating.

Common Operating Conditions of the CD Player

The following information is designed to help you recognize typical situations that could be mistakenly interpreted as mechanical malfunctions of the disc player.

- A disc is already loaded.
- The disc is inserted with the label surface downward.
- The disc is dusty or defective.
- The player's internal temperature is above 140˚F (60˚C). Allow the player to cool off before operating.
- Different manufacturers of compact discs may produce discs with different dimensions or tolerances, some of which may not be within industry standards or in accordance with the CD format. Because of this, a new disc that is free of dust and scratches could be defective and may not play on your Ford Compact Disc Player.

If play does not begin after the CD button is pushed:

- The radio is not on.
- The discs are inserted improperly in the magazine or the CD magazine is not inserted.
- Moisture may have condensed on the lenses within the unit. If this occurs, remove the disc and wait approximately an hour until the moisture evaporates.

If the sound skips:

- Badly scratched discs or extremely rough roads will cause the sound to skip. Skipping will not damage the disc player or scratch the discs.

How to take care of and clean the CD Changer and discs

To ensure the continued performance of your CD Changer carefully read the following precautions:

- Always handle a disc by the edge. Never touch the playing surface.
- Before playing, inspect all discs for any contamination. If needed, clean discs with an approved disc cleaner, such as the Discwasher Compact Disc Cleaner or the Allsop 3 Compact Disc Cleaner, by wiping from the center out to the edges. Do not use a circular motion to clean.
- Do not clean discs with solvents such as benzine, thinner, commercially available cleaners or antistatic spray intended for analog records.
- Do not expose the discs to direct sunlight or heat sources for an extended period of time.
- Do not insert more than one disc into each disc slot of the disc magazine. Doing so may damage the discs, disc magazine or the disc changer.
- Do not insert anything other than discs into the disc magazine.

⚠WARNING
The laser beam used in the compact disc player is harmful to the eyes. Do not attempt to disassemble the case.

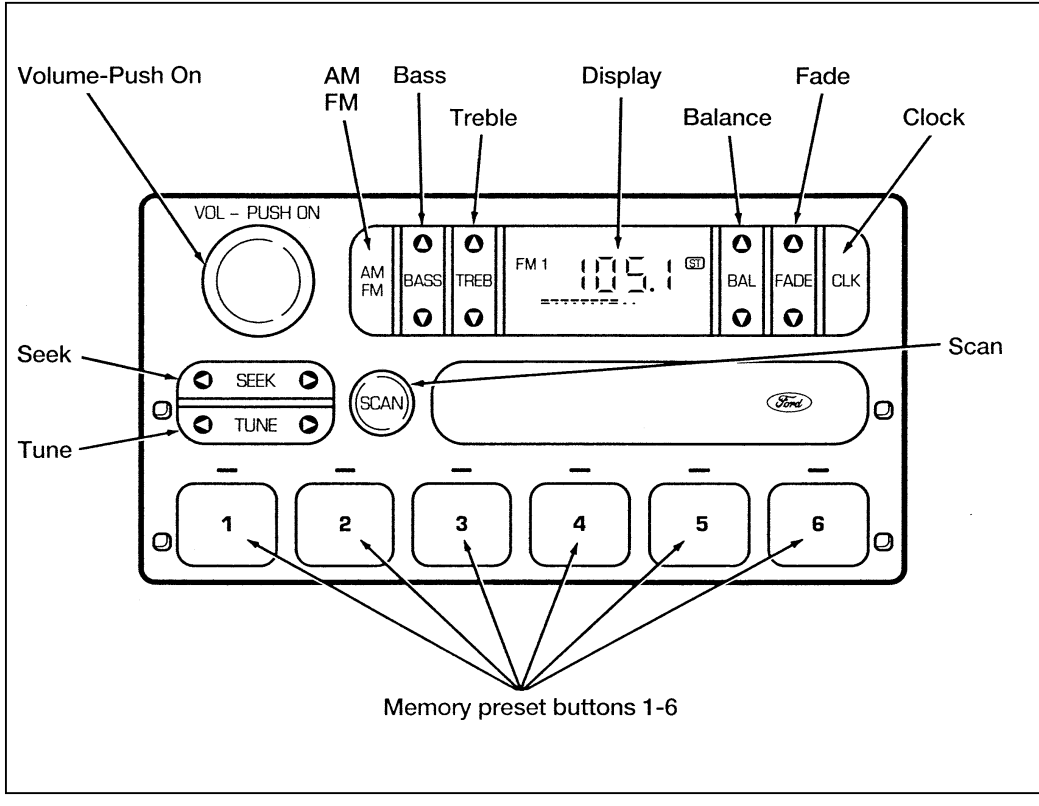
Volume-Push On
AM
FM
Bass
Treble
Display
Balance
Fade
Clock
VOL – PUSH ON
AM
FM
BASS
TREB
FM 1
105.1
ST
BAL
FADE
CLK
Seek
Tune
SEEK
TUNE
SCAN
Scan
1
2
3
4
5
6
Memory preset buttons 1-6

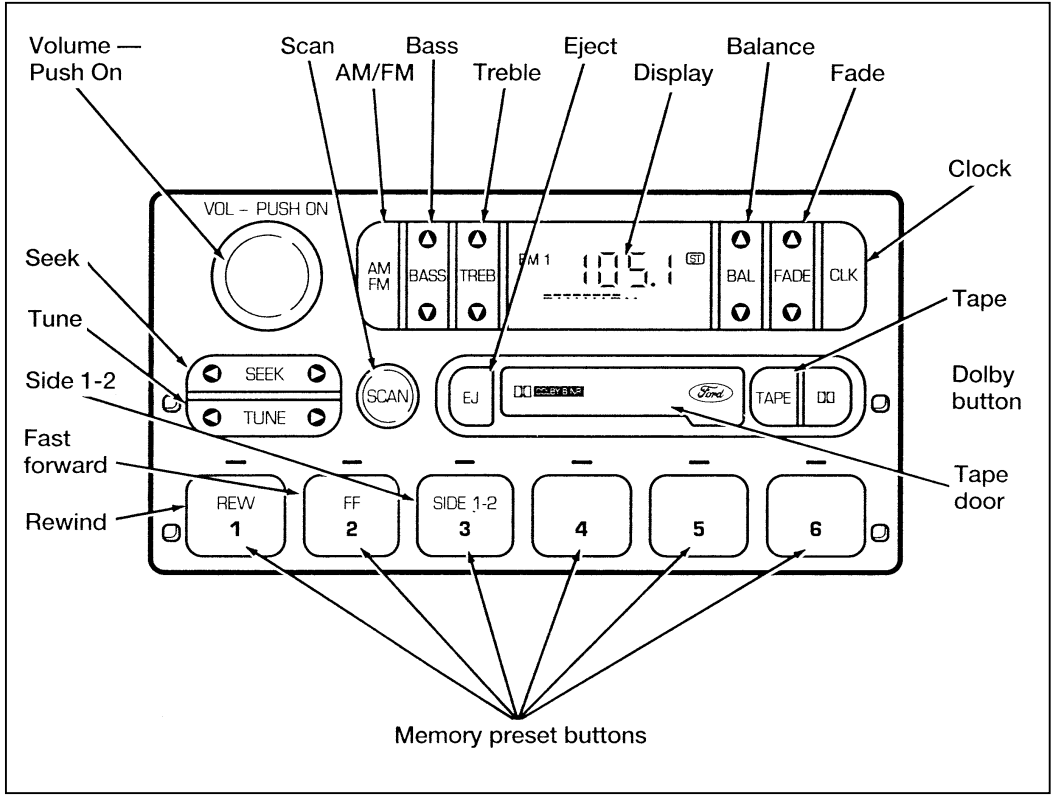
Volume —
Push On
Scan
AM/FM
Bass
Treble
Eject
Display
Balance
Fade
Clock
Seek
Tune
Side 1-2
Fast
forward
Rewind
Tape
Dolby
button
Tape
door
VOL – PUSH ON
AM
FM
BASS
TREB
FM 1
ST
BAL
FADE
CLK
SEEK
TUNE
SCAN
EJ
TAPE
REW
1
FF
2
SIDE 1-2
3
4
5
6
Memory preset buttons

Midline Stereo and Stereo Cassette Radio

Using the Controls on Your New Radio

How to turn the radio on and off

Press the “VOL/PUSH ON” knob to turn the radio on. Press again to turn it off.

How to adjust the volume

Turn the “VOL/PUSH ON” knob clockwise to increase the volume and counterclockwise to decrease the volume. Bars illuminate in the display to show relative volume level.

NOTE: If the volume level is set above a certain listening level when the ignition switch is turned off, when the ignition switch is turned back on, the volume will come back to a “nominal” listening level. However, if the radio power is turned off, the volume will remain in the position it was set at when radio power was switched off.

Selecting the AM or FM frequency band

Push the “AM”/FM“ button to select the desired frequency band or to stop/store cassette tape (when in cassette mode). These functions are used with the station memory buttons described under *How to tune radio stations.*

How to tune radio stations

There are four ways for you to tune in a particular station. You can manually locate the station using the ”TUNE“ button, ”SEEK“ button, ”SCAN“ button, or select the station by using the memory buttons, which you can set to any desired frequency. These four methods are described below.

■ Using the ”TUNE“ function

You can change the frequency up or down one increment at a time by pressing and releasing either the left (◀) or right (▶) side of the ”TUNE“ button.

Manual tuning adjusts your radio to any allowable broadcast frequency, whether or not a station is present on that frequency. (See *All About Radio Frequencies* in this section.)

■ Using the ”SEEK“ function

This feature on your radio allows you to automatically select listenable stations up or down the frequency band. Press the right (▶) side of the ”SEEK“ button to select the next listenable station up the frequency band. Press the left (◀) side of the button to select the next listenable station down the frequency band. By holding the button down, listenable stations can be passed over to reach the desired station.

■ Using the ”SCAN“ function

Pressing the ”SCAN“ button will begin the scan mode up the frequency band, stopping on each listenable station for approximately five seconds.

To stop the scan mode on the presently sampled station, press the ”SCAN“ button again.

■ Setting the Station Memory Preset buttons

Your radio is equipped with 6 station memory buttons. These buttons can be used to select up to 6 preset AM stations and 12 FM stations (6 in FM1 and 6 in FM2).

Follow the easy steps below to set these buttons to the desired frequencies:

1. Select a band, then select a frequency.
2. Press one of the memory preset buttons and hold the button until the sound returns. That station is now held in memory on that button.
3. Follow the two steps above for each station memory preset button you want to set.

Adjusting the tone balance and speaker output of your radio

- Increasing or decreasing bass response

  Press the top (▲) of the ”BASS“ button to increase bass; press the bottom (▼) of the ”BASS“ button to decrease bass.

- Increasing or decreasing treble response

  Press the top (▲) of the ”TREBLE“ button to increase treble; press the bottom (▼) of the treble button to decrease treble.

- Adjusting speaker balance

  Balance control allows you to adjust the sound distribution between the right and left speakers. Press the top (▲) of the ”BAL“ button to shift the sound to the right speakers, and press the bottom (▼) of the ”BAL“ button to shift the sound to the left speakers.

- Adjusting speaker fader

  Fade control allows you to adjust the sound distribution between the front and rear speakers. Press the top (▲) of the ”FADE“ button to shift the sound to the front speakers, and press the bottom (▼) of the ”FADE“ button to shift the sound to the back speakers.

NOTE: Illuminated bars in the display show relative levels of bass and treble, and positions of speaker balance and fader functions (left to right, front to rear).

Using the Controls of Your Cassette Tape Player

NOTE: Radio power must be on to use the cassette tape player or eject a tape.

How to insert a tape

Your cassette tape player is equipped with power loading. Once you insert a tape and push slightly (with the **open edge to the right**), the loading mechanism draws the tape the rest of the way in and play will begin after a momentary tape tightening process.

NOTE: A cassette tape can be loaded and stored with the ignition and radio power off.

How to locate a desired track on the tape

There are four ways to quickly locate a desired selection on the tape. You can use the fast forward, rewind, ”SEEK“, or ”SCAN“ function. Following are brief descriptions of each.

- Fast forwarding the tape

  To fast forward the tape, press the ”FF“ button. The radio will begin playing until fast forward is manually stopped (by pushing the ”TAPE“ button) or the end of the tape is reached.

  At the end of the tape, the direction automatically reverses and plays the other side of the tape.

- Rewinding the tape

  To rewind the tape, press the ”REW“ button. The radio will begin playing until rewind is manually stopped (by pushing the ”TAPE“ button) or the beginning of the tape is reached.

- Using the ”SEEK“ function with your cassette tape player

  While in the tape mode, push the right (▶) side of the ”SEEK“ button to seek forward to the next selection on the tape. Push the left (◀) side to seek the previous tape selection.

- Using the ”SCAN“ function with your cassette tape player

  Press the ”SCAN“ button to begin the forward scan mode on the tape currently playing, stopping on each tape selection for approximately an eight-second sampling (display indicates ”SC“).

  To stop the scan mode on the presently sampled tape selection, press ”SCAN“ a second time.

- How to change the side of the tape being played

  The alternate side of the tape can be selected by pressing the ”SIDE 1-2“ button.

How to eject the tape

To stop the tape and eject the cassette, press the ”EJ“ button. The radio will resume playing if the radio power is on. The tape cartridge can be ejected with radio power (and/or ignition) on or off.

How to switch from tape to AM/FM mode

Press the ”AM/FM“ button to stop the tape player and resume radio play.

Using the Dolby® B noise reduction feature

NOTE: Noise reduction system manufactured under license from Dolby Labs Licensing Corporation. ”Dolby“ and double-D symbol are trademarks of Dolby Laboratories Licensing Corporation.

Push the DD button to activate Dolby B Noise Reduction. Push again to deactivate.

Tips on Caring for the Cassette Player and Tapes

In order to keep your cassette tape player performing the way it was meant to, read and follow these simple precautions:

- Using a Ford Cassette Cleaning Cartridge to clean the tape player head after 10-12 hours of play will help maintain the best playback sound and proper tape operation.
- Only cassettes that are 90 minutes long or less should be used. Tapes longer than 90 minutes are thinner and subject to breakage or may jam the tape player mechanism.
- Protect cassettes from exposure to direct sunlight, high humidity and extreme heat or cold. If they are exposed to extreme conditions, allow them to reach a moderate temperature before playing.
- If a tape is loose inside the cassette, tighten it before playing by putting your finger or a pencil into one of the holes and turning the hub until the tape is tight.
- Loose labels on cassette tapes can become lodged in the mechanism. Remove any loose label material before inserting cassette.
- Do not leave a tape in the cassette tape player. High heat in the vehicle can cause the cassette to warp.

Clock Operation

How to view the clock mode

Press the ”CLK“ button to display time. The time will continue to be displayed until a radio or tape function is chosen. After approximately 10 seconds, the time will again appear in the display. To display radio or tape information only, press the ”CLK“ button a second time.

NOTE: The clock can be displayed or set whether the ignition is on or off.

How to set the clock

1. Turn the radio on.
2. Press and hold the ”CLK“ button, press the right (▶) side of the ”SEEK“ button to increase hours. Press the left (◀) side of the button to decrease hours. Press the right (▶) side of the ”TUNE“ button to increase minutes. Press the left (◀) side of the button to decrease minutes.

NOTE: The clock displays 12-hour time with no AM/PM indications.

Common Radio Reception Conditions

Several conditions prevent FM reception from being completely clear and noise-free, such as the following:

1. Distance/Strength

The strength of the FM signal is directly related to the distance the signal must travel. The listenable range of an average FM signal is approximately 25 miles (40 kilometers). Beyond this distance, the radio is operating in a fringe area and the signal becomes weaker.

2. Terrain

The terrain (hilly, mountainous, tall buildings) of the area over which the signal travels may prevent the FM signal from being noise-free.

If there is a building or large structure between the antenna and station, some of the signal ”bends“ around the building, but certain spots receive almost no signal. Moving out of the ”shadow“ of the structure will allow the station to return to normal.

When the radio waves are reflected off objects or structures, the reflected signal cancels the normal signal, causing the antenna to pick up noise and distortion. Cancellation effects are most prominent in metropolitan areas, but also can become quite severe in hilly terrain and depressed roadways.

To minimize these conditions, a stereo/mono blend circuit has been incorporated into this system. This feature automatically switches a weak stereo signal to a clearer monaural signal, which improves the quality of reception.

Several sources of static are normal conditions on AM frequencies. These can be caused by power lines, electric fences, traffic lights and thunderstorms.

Another reception phenomenon is **Strong Signal Capture and Overload**. This can occur when listening to a weak station and when passing another broadcast tower. The close station may capture the more distant station, although the displayed frequency does not change. While passing the tower, the station may switch back and forth a few times before returning to the original station.

When several broadcast towers are present (common in metropolitan areas) several stations may overload the receiver, resulting in considerable station changing, mixing and distortion.

Automatic gain control circuitry for both AM and FM bands has been incorporated into this system to reduce strong signal capture and overload.

All About Radio Frequencies

The Federal Communications Commission (FCC) and the Canadian Radio Telecommunications Commission (CRTC) establish the frequencies that AM and FM radio stations may use for their broadcasts. The allowable frequencies are, AM: 530, 540...1600, 1610 kHz in 10 kHz steps; FM: 87.9, 88.1...107.7, 107.9 MHz in 0.2 MHz steps.

Not all frequencies will be assigned to a given area. This radio will tune to each of these frequencies using manual tune and no fine tuning is necessary as radio stations may not use other frequencies.

Some FM radio stations advertise a ”rounded-off“ frequency which is not the frequency they actually broadcast on. For example, a radio station that is assigned a frequency of 98.7 MHz may call itself ”Radio 99“ even though 99.0 MHz is not an allowable FM broadcast frequency.

Important Warranty and Service Information

Warranty

Your sound system is warranted for three years or 36,000 miles (60,000 kilometers), whichever comes first. Consult your vehicle warranty booklet for further information. Ask your dealer for a copy of this limited warranty.

Service

At Ford Electronics, we stand behind our audio systems with a comprehensive service and repair program. If anything should go wrong with your Ford audio system, return to your dealer for service. There is a nationwide network of qualified Ford authorized repair centers to assist you.

Procedures for driving your vehicle will vary depending on which type of transmission your vehicle has.

- an Automatic Overdrive Transmission 4R44E/4R55E
- a manual transmission

Automatic Transmission Operation (4R44E/4R55E)

The 4R44E and 4R55E transmissions are electronically controlled four speed overdrive automatic transmissions with lockup torque converter. Transmission operation is controlled by the Powertrain Control Module (PCM).

The PCM will automatically adjust transmission operation to make up for varying conditions. Several sensors located on the engine and transmission such as throttle position, engine speed, vehicle speed and transmission temperature are used by the PCM to shift the transmission into a higher or lower gear when required for the best performance and fuel economy. For example, you may notice that the transmission will upshift to a higher gear more quickly when the vehicle has not reached normal operating temperature.

The PCM also controls the transmission's Torque Converter Clutch (TCC) to further raise vehicle performance and fuel economy. The TCC will engage when the transmission operating temperature and other conditions determined by the PCM have been met. Engagement of the clutch may be noted as a decrease in engine speed.

To help in troubleshooting, the PCM continually performs self-tests on the electronic control system and, if any faults are detected, stores them in memory. The Overdrive Off Indicator Light (O/D OFF), which is located on the instrument cluster, may flash steadily if a malfunction has been detected. If the Overdrive Off Indicator Light is flashing, contact your Ford dealer as soon as possible. If this condition persists, damage to the transmission could occur.

Putting Your Vehicle in Gear

Your vehicle's gearshift is on the steering column. The transmission control switch is located on the end of the gearshift lever. You can put the gearshift in any of the several positions.

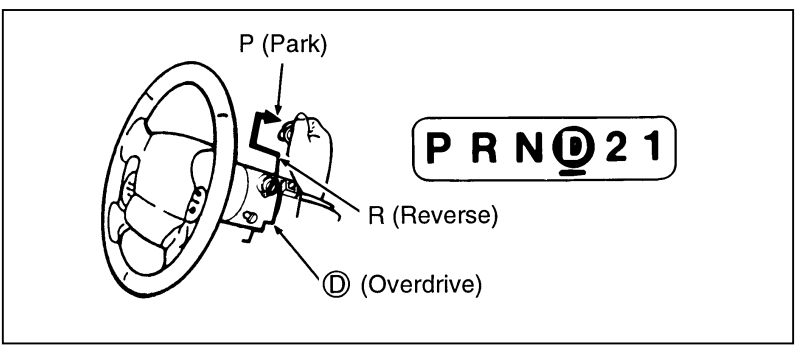

The positions of the column-mounted gearshift

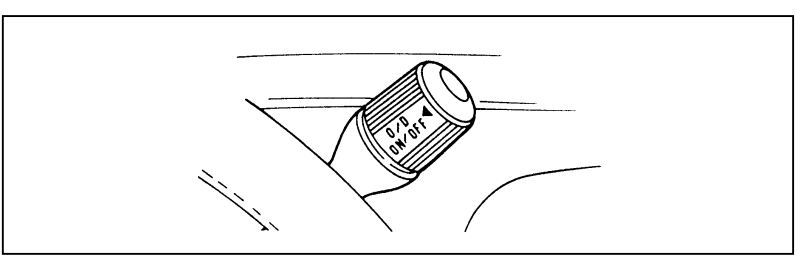

Transmission control switch (located on the end of the gearshift lever)

⚠WARNING

Hold the brake pedal down while you move the gearshift lever from position to position. If you do not hold the brake pedal down, your vehicle may move unexpectedly and injure someone.

Once you place the gearshift securely into position, gradually release the brake pedal and use the accelerator as necessary.

NOTE: Your vehicle is equipped with a brake-shift interlock feature. This feature prevents you from shifting from P (Park) unless you have the brake pedal depressed. (The ignition must be in the ON position.) If you cannot shift from P (Park) with the brake pedal depressed:

1. Apply the parking brake.
2. Remove the key.
3. Insert the key and rotate it one position clockwise (ignition in the OFF position).
4. Apply the brake pedal and shift to N (Neutral). (If the vehicle is shifted back to P [Park], you must repeat the previous steps.)
5. Start the vehicle.

If you need to shift out of P (Park) by using the alternate procedure described above, it is possible that a fuse has blown and that your brakelamps may also not be functional. Please refer to the chapter titled *Servicing Your Ranger* in this Owner Guide for instructions on checking and replacing fuses.

⚠WARNING
DO NOT DRIVE YOUR VEHICLE UNTIL YOU VERIFY THAT THE BRAKELAMPS ARE WORKING.

R (Reverse)

With the gearshift in the R (Reverse) position, the vehicle will move backward. You should always come to a complete stop before shifting into or out of R (Reverse).

N (Neutral)

With the gearshift in the N (Neutral) position, the vehicle can be started and is free to roll. Hold the brake pedal down while in this position.

Driving

When to use Ⓓ (Overdrive)

This is the normal driving position. As the vehicle picks up speed, automatic upshifts to second, third and fourth gears will occur when Ⓓ Overdrive is chosen on the selector and the transmission control switch has not been pressed. The transmission will shift into the correct gear when the right speed is achieved, for the accelerator pedal position you have chosen.

When to use Drive

You will note there is not a drive position on your gearshift indicator. However, you will find a transmission control switch labeled O/D ON/OFF located on the end of the gearshift lever. Press this switch and the O/D OFF indicator light will illuminate on the instrument cluster. With overdrive cancelled and the O/D OFF indicator light illuminated, the transmission will operate in gears one through three. This is useful if you experience frequent downshift/upshift conditions, when operating with a heavy load or in hilly terrain, or if additional engine braking is useful. However, shift back to Ⓓ (Overdrive) whenever practical for optimum powertrain cooling and fuel economy. This can be accomplished by pushing the transmission control switch again, to cancel the O/D OFF control and light.

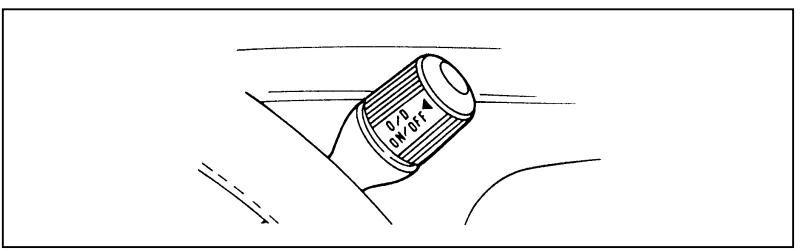

Transmission control switch (located on the end of the gearshift lever)

To return the transmission to the normal Ⓓ Overdrive operation, press the transmission control switch again. The Transmission Control Indicator Light will not be illuminated when Overdrive operation resumes. This switch may be used to select O/D ON or O/D OFF any time the vehicle is being driven.

When starting your vehicle, the overdrive system will automatically be in the normal overdrive mode.

When to use 2 (Second)

Use 2 (Second) to start-up on slippery roads or to provide additional engine braking on downgrades. This position provides 2 (Second) gear operation only.

When to use 1 (Low)

Use 1 (Low) to provide maximum engine braking on steep downgrades. Upshifts from 1 (Low) can be made by manually shifting to 2 (Second) or Ⓓ (Overdrive). Selection of 1 (Low) gear provides only low gear operation from start-up. Selection of 1 (Low) while at higher speeds provides a shift to second gear, and a shift to first gear will occur after the vehicle decelerates to the proper speed.

P (Park)

Always come to a complete stop before you shift into P (Park). This position locks the transmission and prevents the rear wheels from turning. To securely latch the gearshift in the P (Park) position, pull it toward you, push it completely counterclockwise against the stop, and then push it toward the instrument panel.

The gearshift is securely latched in P (Park) if you cannot rotate it in a clockwise direction without lifting it toward you.

⚠WARNING
Always set the parking brake fully and make sure the gearshift is securely latched in P (Park).

With the transfer case in N (Neutral), the vehicle is free to move with either the automatic transmission in P (Park) or with the manual transmission in any driving gear.

⚠WARNING
Do not leave the vehicle unattended with the transfer case in the N (Neutral) position. Always set the parking brake fully and turn off the ignition when leaving the vehicle.

⚠WARNING
Never leave your vehicle unattended while it is running.

Forced Downshifts

To gain extra acceleration in Ⓓ Overdrive or Drive (O/D OFF), push the accelerator to the floor. The transmission will automatically downshift to the appropriate gear: third, second or first.

Power Braking

Increasing the engine speed above idle without vehicle movement (such as holding the brake) in a forward or reverse gear causes transmission stall.

NOTE: Continued operation in the stall condition can result in transmission overheat, malfunction or fluid expulsion.

Manual Transmission Operation

Using the Clutch

Make sure the gearshift lever is in the N (Neutral) position and your right foot is holding down the brake pedal. Then press the clutch pedal to the floor with your left foot. Manual transmission vehicles have a starter interlock switch. The starter will not crank until the clutch pedal is fully depressed. Start the engine and allow it to idle for a few seconds. Move the gearshift into 1 (First) or R (Reverse).

To move the vehicle, release the clutch slowly and at the same time press down slowly on the accelerator so that the vehicle accelerates.

Do not drive with your foot resting on the clutch pedal and do not use the clutch to hold your vehicle at a standstill while waiting on a hill. These actions will seriously reduce clutch life.

Driving with your foot resting on the clutch may cause the vehicle to jerk sharply when pressing or removing your other foot from the accelerator.

Shifting the Gears

The gearshift for a manual transmission is mounted on the floor. The gearshift pattern consists of seven positions: Neutral, five forward gears, and Reverse.

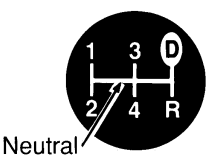

5-Speed Overdrive manual transmission shift pattern

Backing up

To shift into R (Reverse):

1. Push the clutch pedal in all the way to the floor and hold it. If you do not hold the clutch pedal in all the way, you may hear a grinding noise when you shift.
2. Bring your vehicle to a complete stop. Failure to do so may cause synchronizer teeth damage, reducing the useful life of your transmission.
3. Put the gearshift in Neutral and wait at least 3 seconds before shifting into R (Reverse) to prevent a grinding noise. Do not release the clutch.
4. Push the gearshift all the way to the right and pull it back into Reverse.

With the 5-speed transmission you can engage R (Reverse) only by moving the gearshift from the left of 3 (Third) and 4 (Fourth) gears before you shift into R (Reverse). This is a special lockout feature that protects you from accidentally shifting into R when you downshift from 5 (Fifth) gear.

5. Once R (Reverse) is engaged, slowly release the clutch pedal from the floor.

If R (Reverse) is not engaged, continue to push the clutch pedal in while you put the gearshift back into Neutral. Then, release the clutch pedal for a moment and repeat steps 2 through 5.

Upshifting/downshifting

Upshift and downshift at the speeds that are specfied in the charts.

Recommended Shift Speeds
Engines with 5-Speed Manual Overdrive Transmission

Upshifts: Normal Accelerating (Recommended for Best Fuel Economy)

Upshift from:	Transfer Case Mode: 2WD or 4WD High**	4WD Low
First to Second	10 mph (16 km/h)	4 mph (6 km/h)
Second to Third	22 mph (35 km/h)	9 mph (14 km/h)
Third to Fourth	33 mph (53 km/h)	13 mph (21 km/h)
Fourth to Overdrive	41 mph (66 km/h)	17 mph (27 km/h)

Upshifts: Cruising Conditions (Recommended for Best Fuel Economy)

Upshift from:	Transfer Case Mode: 2WD or 4WD High**	4WD Low
First to Second*	10 mph (16 km/h)	4 mph (6 km/h)
Second to Third	19 mph (31 km/h)	8 mph (13 km/h)
Third to Fourth	28 mph (45 km/h)	12 mph (19 km/h)
Fourth to Overdrive	40 mph (64 km/h)	16 mph (26 km/h)

Maximum Downshift Speeds (For Overdrive)*

Shift from:	Transfer Case Mode: 2WD or 4WD High**	4WD Low
Overdrive to Fourth	55 mph (88 km/h)	22 mph (35 km/h)
Fourth to Third	45 mph (72 km/h)	18 mph (29 km/h)
Third to Second	35 mph (56 km/h)	14 mph (23 km/h)
Second to First	20 mph (32 km/h)	8 mph (13 km/h)

* Downshift at lower speeds when driving on slippery surfaces.
** Use the following for 4x2 Applications.

When you slow down or climb a steep hill, always downshift before the engine starts to lose power. Downshifting reduces the chance of stalling and gives your vehicle better acceleration to increase speed again.

When you drive down steep hills, downshifting helps you keep a safe speed and helps prevent unnecessary wear on the brakes.

When you come to a stop, do not downshift through each gear. Disengage the clutch and use the brake as necessary. Downshifting through the gears decreases your vehicle's fuel economy.

⚠WARNING

Continued use of a damaged or worn clutch, prolonged clutch slippage or downshifting at excessive speeds can result in a failure of the engine, transmission or clutch components.

Transmission Function

Upshift at the speeds specified in the chart. All forward gears are synchronized allowing you to shift into them with your vehicle in motion. The clutch pedal should be fully depressed when shifting.

NOTE: Shifting during extremely low rpm's can result in a momentary audible rattle which disappears as vehicle rpm's are increased. Shifting at higher speeds will eliminate this sound.

Parking

To park your vehicle, apply the service brake pedal, and shift into N (Neutral) while still maintaining pressure on the service brake. Set the parking brake fully. Shift into first and turn off the ignition.

⚠WARNING

Do not park your vehicle in Neutral, it may move unexpectedly and injure someone. Use 1 (First) gear and set the parking brake fully.

With the transfer case in N (Neutral), the vehicle is free to move with either the automatic transmission in P (Park) or with the manual transmission in any driving gear.

⚠WARNING

Do not leave the vehicle unattended with the transfer case in the N (Neutral) position. Always set the parking brake fully and turn off the ignition when leaving the vehicle.

Steering Your Vehicle

Your Ranger may have optional power steering. Power steering uses energy from the engine to help steer your vehicle.

If the amount of effort needed to steer your vehicle changes at a constant vehicle speed, have the power steering system checked. If the power steering system breaks down (or if the engine is turned off), you can steer the vehicle manually but it takes more effort.

Never hold the steering wheel to the extreme right or left for more than five seconds if the engine is running. This can damage the power steering pump.

NOTE: After any severe impact such as striking large potholes, sliding into curbs on icy roads, or a collision involving the front end, observe the steering wheel alignment. If the spokes of the steering wheel seem to be in a different position while going straight down the road, have the front suspension and steering checked for possible damage.

Four-Wheel Drive (4WD) System (If equipped)

When you select the 4WD mode, your vehicle uses all four wheels to power itself. This increases traction, enabling you to drive your 4x4 over terrain and road conditions not travelled normally by two-wheel drive vehicles.

Power is supplied to all four wheels through a transfer case that allows you to select four-wheel drive when necessary. Methods for engaging and disengaging 4WD and low range will depend on which system your vehicle has.

4x4 Systems — Lever Operated

The lever operated transfer case can be placed into four positions. The 2H position is the two-wheel drive position in which power is delivered only to the rear axle. The 4H position provides four-wheel drive with power delivered to the front and rear axles for increased traction. The 4L position provides four-wheel drive with power delivered to the front and rear axles when the above average power is required at reduced speeds. In the N (neutral) position, there is no power delivered to either axle.

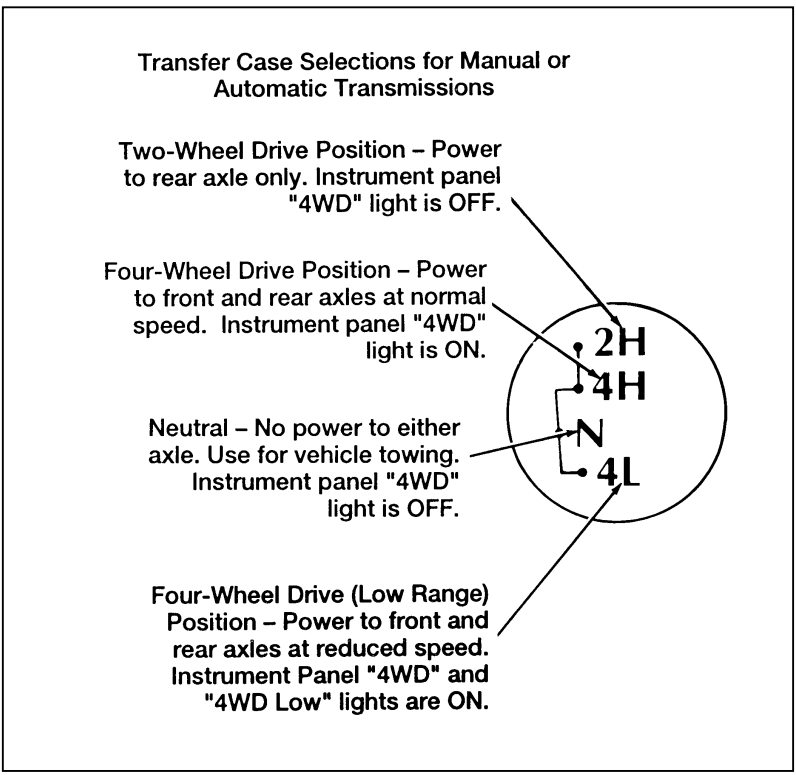

Transfer case selections

Four-wheel drive operation (4H or 4L) on dry pavement is not recommended. Operating the vehicle in four-wheel drive on dry pavement will increase tire wear, decrease fuel economy, and make four-wheel drive disengagement difficult for the transfer case.

4WD system indicator lights

A 4WD light and a 4WD LOW light are located in the instrument cluster.

- 2H position — Neither the 4WD or the 4WD LOW lights are lit.
- 4H position — Only the 4WD light is lit.
- N position — Neither the 4WD or 4WD LOW lights are lit.
- 4L position — Both the 4WD and the 4WD LOW lights are lit.

To shift from 2H to 4H:

Stop the vehicle and engage the manual locking hubs by turning both hub lock selector knobs clockwise to the LOCK position. Move the transfer case shift lever straight back to the 4H position. After both hubs have been turned to the LOCK position, shifts between 2H and 4H (or 4H to 2H) may take place at any speed.

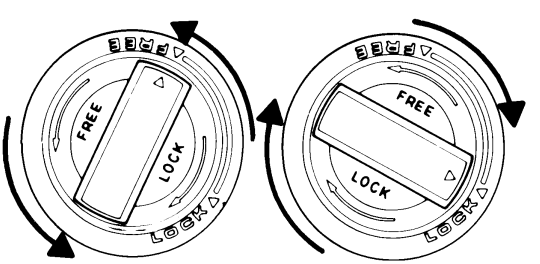

Free Running Position Lock Position

Locking hub positions

NOTE: Do not drive the vehicle in 4H or 4L with the manual locking hubs in the FREE position.

NOTE: Do not drive the vehicle with the left and right manual locking hubs set to different positions.

To shift from 4H to 2H:

Move the transfer case shift lever forward to the 2H position. This can be done at any speed. However, the front driveline will remain engaged to the front wheels until the manual locking hubs are disengaged. To disengage the manual locking hubs, stop the vehicle and rotate both hub lock selector knobs counter-clockwise to the FREE position.

Operating in 2H with the hubs in the LOCK position increases fuel consumption, noise, vibration, and wear. For prolonged 2H operation on dry pavement, set the manual locking hubs to the FREE position.

To shift between 4H and 4L:

Stop the vehicle and place the automatic transmission into N (Neutral) or depress the clutch on vehicles with a manual transmission. Pull the transfer case shift lever to the left and shift the transfer case to the desired 4H or 4L position. This shift should be with one continuous motion without pausing in the N position. Pausing in the neutral position can result in gear clash and difficult shifting. If while shifting between 4H and 4L, the transfer case gets stuck in the N position or is difficult to shift into either 4H or 4L, it may be necessary to let the vehicle roll slightly and/or turn off the engine (particularly on vehicles equipped with automatic transmissions).

To shift between N (Neutral) and either 4H or 4L

To shift into N (Neutral), stop the vehicle and engage the parking brake. Place the automatic transmission into N (Neutral) or depress the clutch on manual transmission vehicles. From either the 4H or 4L position, pull the transfer case shift lever to the left and move the transfer case shift lever to the N (Neutral) position. The N (Neutral) position should only be used for vehicle towing.

With the transfer case in N (Neutral), the vehicle is free to move with either the automatic transmission in P (Park) or with the manual transmission in any driving gear.

⚠WARNING

Do not leave the vehicle unattended with the transfer case in the N (Neutral) position. Always set the parking brake fully and turn off the ignition when leaving the vehicle.

To shift from N (Neutral) to either 4H or 4L, stop the vehicle and engage the parking brake. Place the automatic transmission into N (Neutral) or depress the clutch on manual transmission vehicles. Push the transfer case shift lever to the desired position. If it is difficult to shift into either 4H or 4L, it may be necessary to let the vehicle roll slightly and/or turn off the engine (particularly on vehicles equipped with automatic transmissions).

4WD Systems — Select Drive Electric Shift

The select drive electric shift system functions in three modes. In two-wheel drive mode, power is delivered only to the rear axle at normal road speed. The 4x4 HIGH position provides four-wheel drive with power delivered to the front and rear axles for increased traction. The 4x4 LOW position provides four-wheel drive with power delivered to the front and rear axles when above average power is required at reduced speeds.

Four-wheel drive operation (4x4 HIGH or 4x4 LOW) on dry pavement is not recommended. Operating the vehicle in four-wheel drive on dry pavement will increase noise, vibration, tire wear, decrease fuel economy, and make four-wheel drive disengagement difficult for the transfer case.

Electric shift system indicator lights

A 4WD indicator light and a 4WD LOW indicator light are located in the instrument cluster. If either light flashes, take your vehicle in for service.

- Two-Wheel Drive mode — Neither the 4WD nor the 4WD LOW lights are lit.
- 4WD High — Only the 4WD light is lit.
- 4WD LOW mode — Both the 4WD and 4WD LOW lights are lit.

To shift from Two-Wheel Drive to 4WD High:

To shift into 4WD High rotate the 4WD switch located on the instrument panel to 4x4 High. This shift can be done at a stop or at speeds up to 55 miles per hour (88 km/h). When the vehicle is driven, the automatic locking hubs will engage. If the vehicle is stopped while in 4WD and the vehicle direction is reversed from the previous direction, the automatic locking hubs will momentarily disengage and reengage. The automatic locking hubs may click as they automatically engage in the new direction.

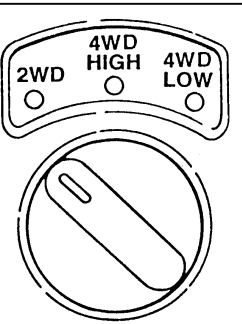

Select drive rotary switch

At extremely low temperatures, it may be necessary to slow down or even stop to shift from two wheel drive to 4WD.

The initial shift from two-wheel drive to 4WD while the vehicle is moving can cause some momentary clunk and ratcheting sounds. This is the front drivetrain coming up to speed and the automatic locking hubs engaging and is not a cause for concern.

Because of possible damage to powertrain components, never shift from two-wheel drive to 4WD with the rear wheels slipping.

To shift from 4WD High to Two-Wheel Drive:

Rotate the 4WD switch to 2WD; the 4WD light on the instrument cluster will go out, indicating the vehicle is in two-wheel drive. This can be done at any speed. To disengage the automatic locking hubs, operate the vehicle in two-wheel drive in the opposite direction for approximately 10 feet (3 meters) in a straight line.

For example:

> If you were driving the vehicle forward in 4WD the automatic locking hubs will disengage the next time the vehicle is driven in reverse in two-wheel drive for approximatedly 10 feet (3 meters) in a straight line.
>
> If you were driving the vehicle in reverse in 4WD, the automatic locking hubs will disengage the next time the vehicle is driven forward in two-wheel drive for approximately 10 feet (3 meters) in a straight line.

Operating in two-wheel drive mode with the hubs locked increases fuel consumption, noise, vibration, and wear. For prolonged two-wheel drive operation on dry pavement, disengagement of the automatic locking hubs, which is not required for two-wheel drive operation, stops all movement of front-wheel drive components while operating in two-wheel drive.

During axle break-in or operation in extremely cold temperatures, the automatic locking hubs may not release completely. It may be necessary to drive the vehicle for 10 to 15 minutes before repeating the release procedure.

To shift from 4x4 HIGH or 2WD to 4x4 LOW:

Stop the vehicle, depress the brake and place the automatic transmission in N (Neutral) or depress the clutch on vehicles with a manual transmission. Rotate the 4WD switch on the instrument panel to 4x4 LOW. Both the 4WD and 4WD LOW lights are now lit.

To shift from 4x4 LOW to 4x4 HIGH or 2WD:

Stop the vehicle, depress the brake and place the automatic transmission into N (Neutral) or depress the clutch on vehicles with a manual transmission. Rotate the 4WD switch on the instrument panel to 4x4 HIGH or 2WD.

It is not recommended to operate the vehicle in the 4WD modes with a temporary spare. If 4WD operation is necessary, do not operate at speeds above 10 mph or for distances above 50 miles. Extended operation in 4WD with a temporary spare may result in damage to drivetrain components.

Driving Off Road with 4-Wheel Drive

Most vehicles with four-wheel drive are especially equipped for driving on sand, snow, mud, or rough terrain and have operating characteristics that are somewhat different from conventional vehicles, both off and on the road. The driving tips below will help you learn to use four-wheel drive.

- Do not use four-wheel drive on dry, hard-surfaced roads, especially with a temporary spare tire in use.
- Special maintenance procedures are necessary after operating with drive components in water.

- Manual locking hubs must be in LOCK position before shifting into four-wheel drive.

When using four-wheel drive, maintain steering wheel control at all times, especially in rough terrain. Since sudden changes in terrain can result in abrupt steering wheel motion, make sure you grip the steering wheel rim from the outside. Do not grip the spokes.

Drive cautiously to avoid vehicle damage from concealed objects such as rocks and stumps. Know the terrain or examine maps of the area in question before driving. Map out your route beforehand. To maintain steering and braking control of your vehicle, you must have all four tires on the ground, and they must be rolling, not sliding or spinning.

Transmission upshift in 4WD with transfer case in 4WD LOW may be quite firm due to large total gear reduction. This condition is normal.

Sand

When driving over sand, try to keep all four wheels of the vehicle on the most solid area of the trail. Do not reduce the tire pressures but shift to a lower gear and drive steadily through the terrain. Apply accelerator slowly and avoid spinning the wheels.

Mud and Water

When driving through water, determine the depth; avoid water higher than the bottom of the hubs (if possible) and proceed slowly. If the ignition system gets wet, the vehicle may stall.

Once through water, always try the brakes. Wet brakes do not stop the vehicle as effectively as dry brakes. Drying can be improved by moving your vehicle slowly, while applying light pressure on the brake pedal.

After driving through mud, clean off residue stuck to rotating driveshafts and tires. Excess mud stuck on tires and rotating driveshafts causes an imbalance which could damage drive components.

NOTE: If the transmission and transfer case is submerged in water, their fluids should be checked and changed, if necessary.

Additional Special Driving Instructions for 4-Wheel Drive Vehicle Operators

Driving on Hill or Slope Terrain

When driving on a hill, avoid driving crosswise or turning on steep slopes, you could lose traction and slip sideways. Drive straight up, straight down or avoid the hill completely. Know the conditions on the other side of a hill before driving over the crest.

When climbing a steep hill, start in a lower gear, rather than finding it necessary to downshift from a higher gear after the ascent has started. This reduces strain on the engine and the possibility of stalling.

When descending a steep hill avoid sudden braking. Rapid pumping of the brake pedal will help slow the vehicle and still maintain steering control.

Driving on Snow or Ice

A four-wheel drive vehicle has advantages over two-wheel drive vehicles in snow and ice but can skid like any other vehicle. If so equipped, keep the vehicle in four-wheel drive if icy or slippery conditions exist.

Avoid sudden applications of power and quick changes of direction on snow or ice. Apply the accelerator slowly and steadily when starting from a full stop.

All utility-type and Four-Wheel Drive vehicles have special design and equipment features to make them capable of performing in a wide variety of off-road applications. Specific design characteristics give them higher centers of gravity than ordinary passenger cars.

⚠WARNING

Utility and four-wheel drive vehicles are NOT designed for cornering at speeds as high as passenger cars any more than low-slung sports cars are designed to perform satisfactorily under off-road conditions. Avoid sharp turns or abrupt maneuvers in these vehicles.

Brakes

Front Disc Brakes

The front disc brakes are self-adjusting. They do not require service other than periodic inspection for pad wear.

Rear Drum Brakes

The rear drum brakes are self-adjusting. Automatic adjustment occurs when the brakes are applied while “backing up.” If normal operation does not include much backing, adjust the brakes when they seem “low,” using the procedure under *If Brakes Do Not Grip Well or Pedal is “Low”* in this chapter.

Hydraulic Power Brakes

The hydraulic brake system is made up of two independent hydraulic circuits. One hydraulic circuit supplies fluid to the front disc brakes and the other hydraulic circuit supplies fluid to the rear drum or disc brakes. These two circuits are supplied by a common hydraulic brake fluid reservoir, with a fluid level sensor.

The brake light in the instrument cluster will light for low brake fluid in the common brake fluid reservoir.

⚠WARNING

An increase in pedal travel will result in reduced braking capability. The brake system should be checked immediately.

Rear Anti-lock Brakes

Your vehicle may be equipped with a Rear Anti-lock Brake System. This system prevents at least one and often both rear wheels from completely locking up when the brakes are applied in a panic stop, for example.

Even with the Anti-lock Brake System, you should be careful when braking. Front brake lock up on any surface, even on smooth pavement causes loss of steering control. Heavy braking on roads with loose surfaces such as snow or gravel, or severe pavement irregularities could also cause you to lose steering control of your vehicle.

⚠WARNING

If the anti-lock brake system warning light remains on or comes on while driving, have the braking system checked by a qualified service technician as soon as possible.

NOTE: If a fault occurs in the anti-lock system, and the brake warning light is not lit, the anti-lock system is disabled but normal brake function remains operational.

Four Wheel Anti-lock Brake System

Your vehicle may be equipped with a Four Wheel Anti-lock Braking System (4WABS). The 4WABS helps the driver to maintain vehicle control by preventing wheel lockup during hard braking.

The 4WABS operates with a computer that is able to optimize vehicle control during braking on varying tire and road conditions by modulating the brake pressure at each of the front wheels and the rear axle. This “pumping action” is similar to the driver “pumping” the brakes but happens at a much faster rate.

⚠WARNING

The Anti-lock system does NOT assist the vehicle in stopping quickly on wet or icy surfaces. Heavy braking combined with poor road conditions could cause you to lose steering control of your vehicle.

Using anti-lock brakes

The operation of a vehicle with 4WABS is not similar to the operation of normal brakes. Some differences exist and are listed below:

- Apply the brake steadily. In the event of a panic stop, do NOT “pump” the brakes. “Pumping” the brakes during an Anti-lock stop will diminish braking effectiveness.
- During an Anti-lock stop, the driver will notice a brake pedal pulsation and hear some noise from the engine compartment. This is an indication that the 4WABS system is working correctly and is normal.

⚠WARNING
The Anti-lock system does NOT decrease the time necessary to apply the brakes. Always leave enough room between the vehicle in front of you and your vehicle.

4WABS driver warning light

The 4WABS computer continuously monitors the system while driving for any electrical faults or system malfunctions. In addition, the 4WABS computer performs an initial system check called bulb proveout when the vehicle ignition is switched on. During bulb proveout, the ABS light on the instrument cluster will momentarily illuminate and then go out.

NOTE: **After starting the vehicle and upon initial drive-off, the driver may notice a single pulse of the brake pedal and a noise from the engine compartment. This is part of the initial system check and is normal.**

Should a malfunction in the 4WABS system occur, the ABS light on the instrument cluster will come on and stay on indicating that the anti-lock system has been shut down and the vehicle needs to be serviced. Normal braking is not affected unless the brake warning light is also illuminated.

NOTE: **It is important to note that when the ABS Warning Light is illuminated the ABS system is disabled. The vehicle must be serviced immediately to restore the benefits of the Anti-lock system.**

NOTE: **Mobile phones or radio transmitters not installed by Ford Motor Company may interfere with the Anti-lock System. Should the Anti-lock system activate unexpectedly or the Anti-lock Warning Light illuminate after installation of such a unit, have the installation of the unit checked.**

If Brakes Do Not Grip Well or Pedal is “Low”

If brakes do not grip well, it may indicate the rear drum brakes need adjustment. To do this, drive the vehicle in reverse at 5 mph (8 km/h) on level, dry pavement. Stop the vehicle by firmly applying the brakes. Repeat this procedure four or five times.

If during normal operation the brake pedal seems “low”, it may indicate the need for a brake system inspection and/or service. You should have your brakes checked as soon as possible.

Occasional brake squeal during light to moderate stops does not affect the function of the brake system and is normal. However, if the squeal becomes louder or more frequent, have your brakes inspected by your dealer or a qualified service technician.

⚠WARNING

Modifications to the suspension spring rates and/or vehicle ride height may adversely affect vehicle stopping ability.

If Brakes Pull

- Check tire pressure.
- Perform the self-adjustment procedure described under *If Brakes Do Not Grip Well or Pedal is “Low.”*

If pull occurs during the first 500 miles (800 km), make 10 moderately fast stops from 40 mph (65 km/h) and then perform the self-adjustment procedure above. It may be necessary to repeat this operation to properly seat new brake linings and pads.

Stopping Distances

Stopping distances vary with different loads and driving conditions. Use caution when encountering new conditions and acquaint yourself with vehicle performance. Take full advantage of engine braking power when slowing down.

Applying the Brakes

Apply the brake pedal gradually. Use the “squeeze” technique — push on the brake pedal with a steadily increasing force. This allows the wheels to continue to roll while you are slowing down, which lets you steer properly.

Do not drive with your foot resting on the brake pedal. This will increase your vehicle’s stopping distance and may also cause brake damage.

⚠WARNING
If you are driving down a long or steep hill, shift to a lower gear. Do not apply your brakes continuously, as they may overheat and become less effective.

Using the Parking Brake

The parking brake should be used whenever you park your vehicle.

The parking brake pedal is suspended just below the bottom of the instrument panel to the left of service brake and/or clutch pedals. To set the parking brake while parking your vehicle, press the brake pedal with your right foot and hold it while you push the parking brake pedal down firmly and fully with your left foot.

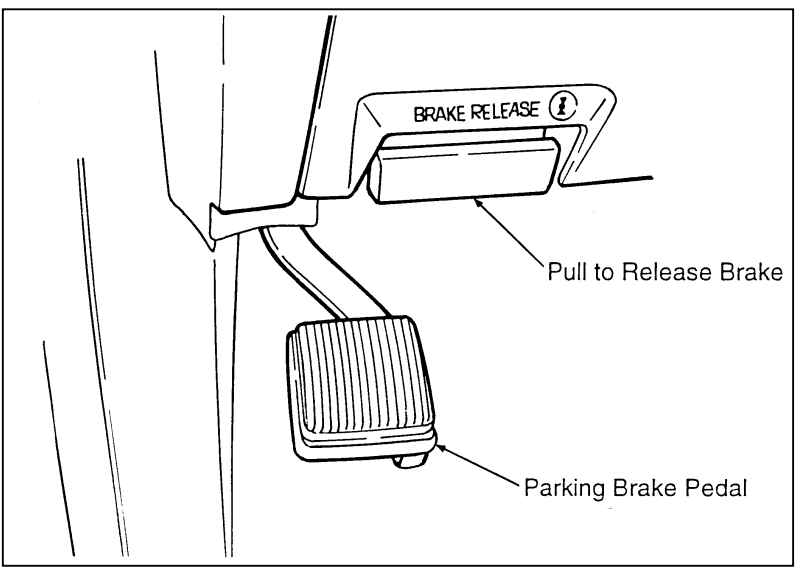

Parking brake

⚠WARNING

When parking, do not use the gearshift in place of the parking brake. Turn the key to LOCK whenever you leave your vehicle. Always set the parking brake fully and make sure that the gearshift is securely latched in P (Park) (automatic transmission) or in 1 (First) (manual transmission). Never leave your vehicle unattended while it is running. If you do not take these precautions, your vehicle may move unexpectedly and injure someone.

With the transfer case in N (Neutral), the vehicle is free to move with either the automatic transmission in P (Park) or with the manual transmission in any driving gear.

⚠WARNING

Do not leave the vehicle unattended with the transfer case in the N (Neutral) position. Always set the parking brake fully and turn off the ignition when leaving the vehicle.

To release the parking brake, press the service brake pedal with your right foot and hold the parking brake pedal down with your left foot while you pull the parking brake release lever. Lift your foot from the parking brake pedal after it is released.

⚠WARNING

If the parking brake is fully released, but the Brake System light remains on, have the brakes checked immediately. They may not be working properly.

The parking brake is not designed to stop a moving vehicle, but you can use the parking brake to stop your vehicle in an emergency if the normal brakes fail. However, since the parking brake applies only the rear brakes, the stopping distance will increase greatly and the handling of your vehicle will be adversely affected.

Driving Under Special Conditions

Tips for Safe Driving

As with any new vehicle, yours may drive and handle differently from your previous vehicle. Use care until you become accustomed to its various features and driving characteristics.

Operate your vehicle within reasonable limits. Sudden acceleration, deceleration, turning, or combinations of these maneuvers can cause a vehicle to behave differently than anticipated.

Wheel Spin

- Extreme acceleration can cause the rear wheels to spin, perhaps resulting in reduced steering control.

If the wheels spin, use 2 (Second gear) to gain traction. Move forward slowly and evenly. If this does not work, try rocking the vehicle.

For 4x4 vehicles, engage 4WD, and try to drive away.

High Speed Driving

Ford Motor Company recommends obeying posted speed limits.

⚠WARNING
Driving too fast for conditions creates the possibility of loss of vehicle control. Driving at very high speeds for extended periods of time may result in damage to vehicle components.

Speed limiter

All models are equipped with a Powertrain Control Module (PCM) which limits the maximum engine speed and thus road speed in top gear. Vehicle operation is normal since the controlled maximum speed is above posted highway speeds in North America.

Driving in Bad Weather

Slippery roads

Drive cautiously on wet or snowy roads:

- Do not quickly move the steering wheel unless necessary.
- Drive slower than you normally would.
- Give your vehicle more distance to stop.

- Pump the brake pedal steadily and evenly to avoid locking your front wheels (except with 4WABS).
- To stop on ice, shift to N (Neutral) below 10 mph (15 km/h) and gently pump brakes (except with 4WABS).
- Consider using one of the lower gears.
- For 4x4 vehicles, engage 4WD, and try to drive slowly away.

⚠WARNING

To avoid losing control on slippery roads, do not downshift into Low with the automatic transmission when moving faster than 20 mph (32 km/h). Do not downshift into First with the manual transmission when moving faster than 5 mph (8 km/h).

⚠WARNING

The rear antilock brake system may not prevent brake lock-up on extremely slippery surfaces. Rear brake lock-up may also occur while driving in four-wheel drive because the transfer case couples the front and rear axles together.

Traction-Lok Rear Axle (If equipped)

This axle provides added drive away traction on slippery surfaces, particularly when one or more wheels are on a surface with poor traction.

Extended use of other than matching size tires on a Traction-Lok rear axle could result in a permanent reduction in effectiveness. This loss of effectiveness does not affect normal driving and should not be noticeable to the driver.

⚠WARNING
To avoid injury, never run the engine with one wheel off the ground, such as when changing a tire.

High water

Never attempt to cross water that is fast flowing or of unknown depth.

Do not drive through flooded areas unless you are sure that the water is below the bottom of the wheel hubs.

If you must drive through high water, drive slowly. You may have limited traction or wet brakes, so allow extra stopping distance because your vehicle will not stop as quickly as usual.

After you drive through the standing water, apply your brakes gently several times as your vehicle moves slowly. This helps to dry the brakes.

NOTE: If the transmission and transfer case is submerged in water, their fluids should be checked and changed, if necessary.

NOTE: All rear axle lube quantities must be replaced every 100,000 miles (160,000 km) or if the axle has been submerged in water. Otherwise, the lube should not be checked or changed unless a leak is suspected or repair required.

Rocking the vehicle

For 4x4 vehicles, engage 4WD LOW, when the vehicle gets stuck and try to drive away.

If your vehicle gets stuck (for example, in mud or snow), you may rock it out of the spot. Shift in a steady rhythm between forward and reverse gears. Allow the transmission to fully engage, then press lightly on the accelerator. Do not rock the vehicle for more than a few minutes. This may overheat the

engine and transmission, causing damage to both. In addition, other vehicle systems and components may also be damaged.

⚠WARNING

Do not spin the wheels at over 35 mph (55 km/h). The tires may fail and injure a passenger or bystander.

Driving With a Heavy Load

There are limits to the amount of weight your vehicle can carry or tow. The total weight of your vehicle, plus the weight of the passengers and cargo, should never be more than the Gross Vehicle Weight Rating (GVWR). Also, the weight that your vehicle carries over the front axle and rear axle should never be more than the Gross Axle Weight Rating (GAWR) for the respective axle.

The weight limits of your vehicle's tires affect the GVWR or GAWR limitations. Usage of replacement tires with higher weight limits than originals does not increase GVWR or GAWR. Usage of lower capacity replacement tires may lower GVWR and GAWR limitations.

⚠WARNING

If the GVWR or the GAWR specified on the Safety Compliance Certification Label is exceeded, your vehicle may be damaged or you may lose control and injure someone.

Securing loads in cargo area

To prevent damage to the pickup box and cab, secure any movable cargo pieces using ropes or straps and the tie down holes in the stake pockets of the steel pickup box or the tie down hooks inside the Splash pickup box.

Secure all items in cargo area to prevent them from falling out and creating a safety hazard on the roadway.

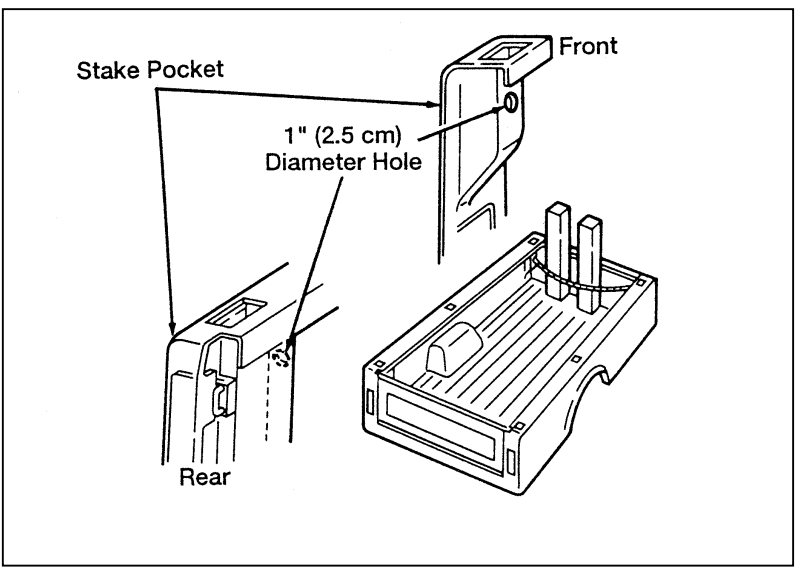

Cargo tie-down holes

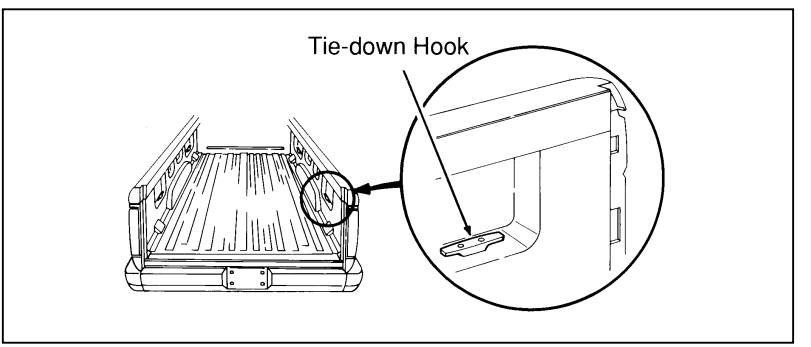

Cargo tie-down hooks — Splash pickup box

Loading sheets of building material

Four-foot (122 cm) wide sheets of building or other material will not fit flat on the pickup box floor. However, support pockets in the pickup walls permit up to 500 lb (227 kg) of this type cargo to be carried on crossbody mounted 2“ x 6” (5 x 15 cm) boards (styleside box only). See illustration.

NOTE: Four-foot wide sheets will not fit flat on the Splash pickup box floor.

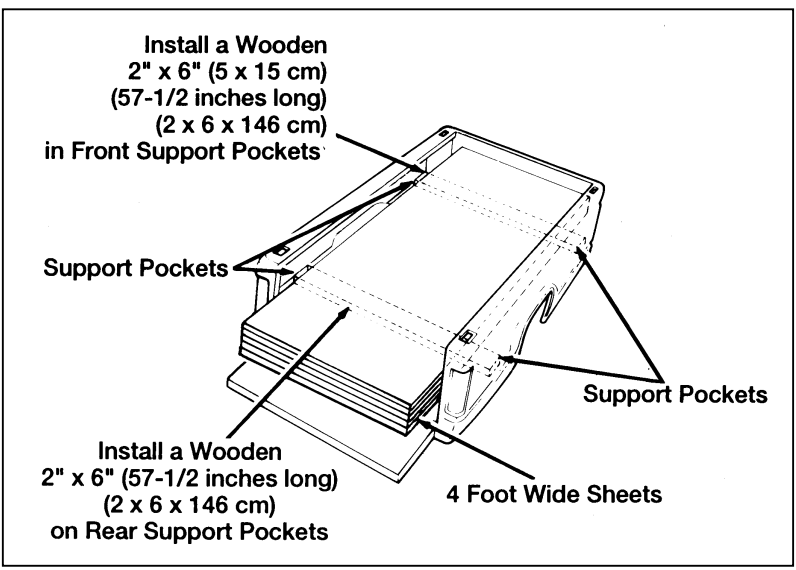

Loading four foot (122 cm) building material sheets (styleside box only)

Vehicle/Trailer Loads

All vehicles may tow a Class I trailer provided the Gross Combined Weight (GCW) is less than or equal to the GVWR shown on the Safety Compliance Certification Label. For heavier trailer applications, refer to the towing information found later in this chapter.

Trailer Towing (may require trailer tow option package)

Towing a trailer puts additional loads on your vehicle's engine, transmission, axle, brakes, tires and suspension. For your safety and for the good of your vehicle, use the right equipment for the type of trailer you tow.

Your trailer towing capability will vary based on the standard and optional equipment on your vehicle. Refer to the following

Vehicle Loading/Towing Information and the Trailer Towing Tables to determine the specific towing capability of your vehicle.

- Stay within the load limits when you tow.
- Carefully and thoroughly prepare your vehicle for towing, making sure to use the right equipment and to attach it properly. (See *Preparing to Tow* in this chapter.)
- Use extra caution when driving your vehicle while you tow. (See *Driving while you tow* in this chapter.)
- Service your vehicle more frequently if you tow a trailer. (See *Servicing your vehicle if you tow* in this chapter.)

Do not tow a trailer until your vehicle has been driven at least 500 miles (800 km).

Vehicle Loading/Towing Information

Your vehicle's load capacity is designated by weight, not volume, so you cannot necessarily use all available space with large or heavy loads. Maximum safe vehicle weights as well as tire, rim sizes and inflation pressures are specified for your vehicle at the assembly plant on the Safety Compliance Certification Label. The Certification Label is located on the left front door lock facing or the door latch post pillar.

Trucks, unlike passenger cars, are basically custom vehicles designed to carry a load. Most owners start with a base vehicle and add production and dealer installed and/or aftermarket components to suit their tastes and purposes. Even trucks that are purchased for personal transportation only are likely to have considerable optional equipment, such as step bumpers and light bars, for example.

⚠WARNING

It is extremely dangerous to ride in a cargo area, inside or outside of a vehicle. In a collision, people riding in these areas are more likely to be seriously injured or killed.

⚠WARNING

Do not allow people to ride in any area of your vehicle that is not equipped with seats and safety belts.

⚠WARNING

Be sure everyone in your vehicle is in a seat and using a safety belt properly.

Each additional item of equipment affects how much cargo a vehicle can carry. If a vehicle is overloaded, performance will suffer and service concerns may arise.

The following is a typical example of a Safety Compliance Certification Label and an explanation of how this information should be used:

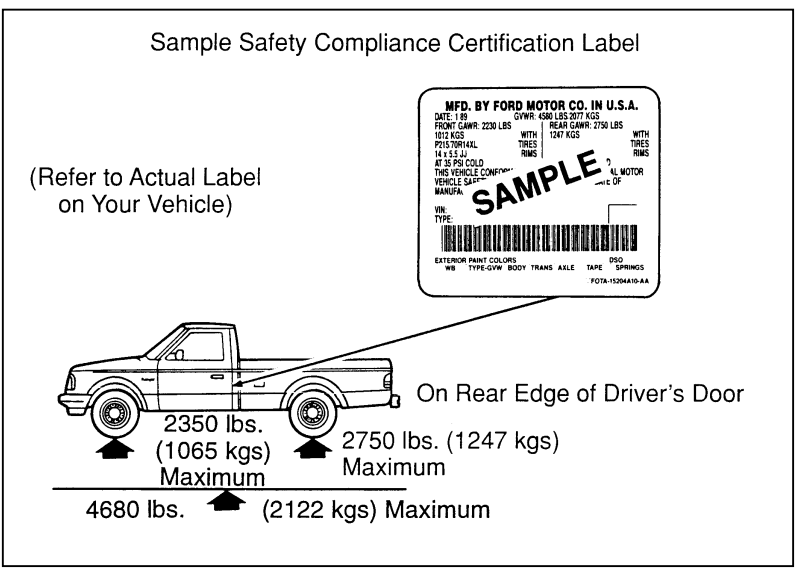

Safety Compliance Certification Label

Do not use the sample numbers on the Safety Compliance Certification Label shown. Use the actual numbers from your vehicle certification label.

Understanding Loading/Towing Information

The following terms are used to describe the ability to carry or tow a load:

- Base Curb Weight
- Payload
- GVW (Gross Vehicle Weight)
- GVWR (Gross Vehicle Weight Rating)
- GAWR (Gross Axle Weight Rating)
- GCWR (Gross Combined Weight Rating)
- Maximum Trailer Weight Rating
- Maximum Trailer Weight
- Trailer Weight Range

Base Curb Weight

The Base Curb Weight is the weight of the vehicle including fuel, coolants, lubricants, emergency tools, spare wheel and tire. It also includes any equipment that is *standard* on that model. It does not include passengers, cargo or optional equipment installed by factory, dealer, aftermarket supplier or customer.

Payload

Payload is the combined, maximum allowable weight of cargo, occupants and optional equipment that the truck is designed to carry. It is Gross Vehicle Weight Rating minus the base curb weight.

Gross Vehicle Weight (GVW)

If you add base curb weight and the weight of a load (including passengers, cargo and optional equipment) being carried at a particular time, you get the Gross Vehicle Weight (GVW).

It is important to remember that GVW *is not a limit or a specification.* If an owner loads up a vehicle and weighs it, that's the GVW at that moment. If the owner piles on more of a load and weighs it again, that becomes the GVW.

Gross Vehicle Weight Rating (GVWR)

To avoid overloading a vehicle, the owner should observe the manufacturer's specified Gross Vehicle Weight Rating. The GVWR is the maximum total weight of base vehicle, passengers, optional components and cargo that a particular vehicle was designed to carry.

Gross Axle Weight Rating (GAWR)

We have all seen a car or a truck that is loaded down in the rear and riding high in the front. This is a dangerous condition that usually means that the rear suspension components are under severe strain and that vehicle handling is impaired. There is more to carrying a load than just payload or GVWR.

Your Safety Compliance Certification Label not only gives the GVWR, it also gives the Gross Axle Weight Rating (GAWR) which is the carrying capacity for each axle system. For trucks, the rear axle will be designed to carry more weight than the front.

The rating is based on the carrying capacity of the *lowest rated* axle and suspension component as well as other factors. This is why it's so important to observe vehicle loading ratings. Overloading a vehicle punishes components and can lead to shortened service life or outright failure.

The capacity of the tires is included as part of the axle and suspension system, which is to be considered when determining the lowest rated component. Tires are rated to carry a specific maximum load at a specific maximum tire pressure.

Passenger car type tires when installed on light trucks and multipurpose passenger vehicles are rated at 10% lower load carrying capacity due to the differences in vehicle usages.

The vehicle must not be loaded to both the front and rear GAWR because the GVWR will be exceeded. The GAWR of the front and rear axles exceeds the GVWR when added together to allow flexibility in fore and aft loading of cargo.

With the tires inflated to the specified pressure the total weight of your vehicle must not exceed the GVWR and GAWR specified on the Safety Compliance Certification Label. This includes full fuel tank(s), vehicle equipment, and occupants as well as the cargo load.

GCWR (Gross Combined Weight Rating)

GCWR is the maximum combined weight of the towing vehicle (including passengers and cargo) and the loaded trailer. The GCWR is specified by the manufacturer to indicate the combined maximum loaded weight that the vehicle is designed to tow.

Maximum Trailer Weight Rating

The maximum trailer weight rating is the maximum weight of a trailer the vehicle is permitted to tow. It is specified by the manufacturer and is determined by subtracting the vehicle curb weight for each engine/transmission combination, any required option weight for trailer towing and the weight of the driver from the GCWR for the towing vehicle.

Maximum Trailer Weight

The maximum trailer weight is the maximum weight of a trailer the loaded vehicle is permitted to tow. It is determined by subtracting the weight of the loaded towing vehicle (including passengers and cargo) from the GCWR for the towing vehicle.

Trailer Weight Range

The trailer weight range is a specified range by weight, which the trailer must fall within, ranging from zero to the maximum trailer weight rating.

NOTE: Ranger pick-ups are not recommended for slide-in camper usage.

Calculating The Load

To know how much weight your vehicle can carry:

- Obtain ratings from your Safety Compliance Certification Label, and the Trailer towing specifications in the owner guide (refer to the Index)
  - — Refer to the following sample illustration to locate the various ratings on your Safety Compliance Certification Label.
  - — If you do not plan on pulling a trailer, do not include these ratings into your calculations.
- Weigh your vehicle as you customarily operate the vehicle (without cargo).
- Subtract the total weight of passengers, driver and optional equipment added by the factory, dealer or aftermarket supplier to determine how much cargo weight you can carry.

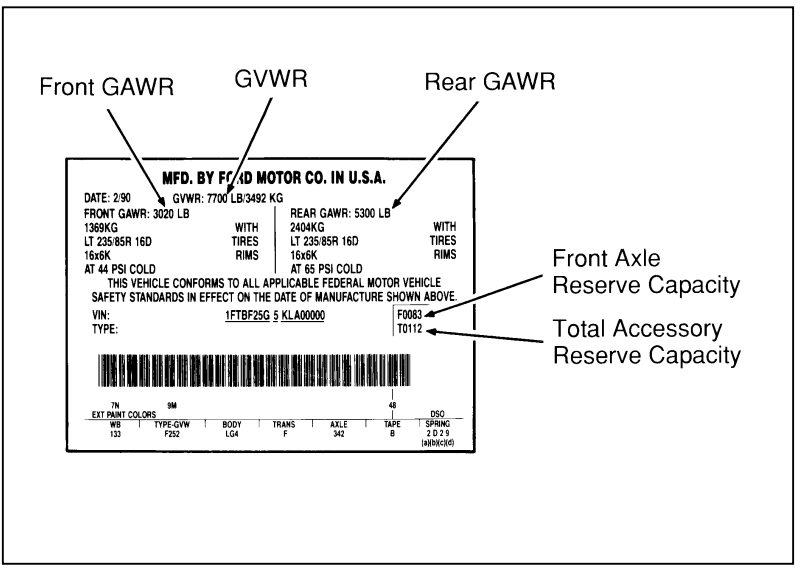

Sample label

If you suspect that your payload is excessive, have your vehicle weighed at a highway weigh station or appropriate commercial facility. Weigh the total vehicle and trailer (if applicable), then separately weigh the vehicle at the front and rear wheels. And finally, weigh the trailer separately if applicable.

Use this chart to perform your calculations.

Actual Weights

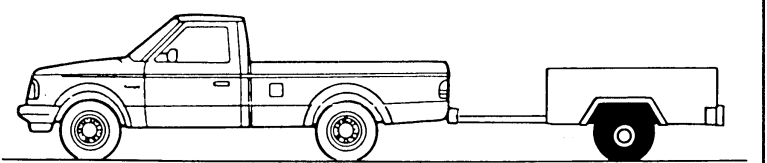

GAW Front _____

GAW Rear _____

GAW Trailer _____

GVW (Front & Rear) _____

GCW (Gross Combined Weight)
(GAW Front & Rear & Trailer) _____

Refer to your owner guide charts to find the maximum GCWR for your type of engine and rear axle ratio.

Ratings	Actual	Load Capacity Available
GAWR F _____	_____	_____
R _____	_____	_____
GVWR _____	_____	_____
GCWR _____	_____	_____

Subtract the actual weights from the ratings to determine the available cargo load capacity.

NOTE: The Truck Safety Compliance Certification Label has two weight related entries that sometimes cause confusion.

Front Axle Reserve Capacity in Pounds (kgs): If this value is given as 83 pounds (38 kgs) on the label, does this mean that you are limited to adding only 83 pounds (38 kgs) of accessories to the front end capacity? Not exactly. This says that you can load 83 pounds (38 kgs) of options on the front axle, add 150 pound (68 kgs) passengers to all seating positions, and add evenly distributed cargo in the box without exceeding the GAWR F.

It is possible to hang heavier equipment on the front as long as the vehicle owner/operator compensates. This can be accomplished, if necessary, by carrying fewer passengers, less cargo or positioning cargo more toward the rear, which has the effect of reducing the load on the front. Keep in mind that the GAWR F, GAWR R, nor the GVWR should ever be exceeded.

Total Accessory Reserve Capacity in Pounds (kgs): If, for example, this value is given as 112 pounds (51 kgs), does this mean that you are limited to adding 112 pounds (51 kgs) of accessories to your vehicle? Not exactly. This is a number that is related to government crash test standards, and only indirectly reflects on the amount of accessory weight that can be carried.

In the case of both these numbers (83 and 112 pounds) (38 and 51 kgs), the important thing to remember is that for safe operation, an owner/operator should calculate the amount and the distribution of all weights (passengers, accessory equipment and cargo). These combined weights should fall below the vehicle's GVWR and GAWR.

Camper Bodies

NOTE: Your Ranger Pickup is not recommended for slide-in camper bodies.

Trailers

Towing a trailer safely means having the proper weight on the tongue (usually 10% of the trailer weight). Load-equalizing hitches on large rigs may transfer weight to each of the vehicle's axles. This weight must be included in capacity calculations when determining if the vehicle is loaded within safe limits.

If your vehicle exceeds the GVWR, remove cargo from your vehicle accordingly. If your vehicle exceeds the GAWR for either axle, shift the load or remove cargo accordingly.

⚠WARNING

If the GVWR or the GAWR specified on the Safety Compliance Certification Label is exceeded, your vehicle may be damaged or you may lose control and injure someone.

⚠WARNING

Towing trailers beyond the maximum recommended gross trailer weight could result in engine damage, transmission/axle damage, structural damage, loss of control, and personal injury.

Use the Safety Compliance Certification Label to find the axle code number and the engine type for your vehicle.

Use the appropriate Maximum Gross Combined Weight Rating (GCWR) chart to find the Maximum GCWR for your type engine and rear axle ratio.

Subtract your Loaded Vehicle Weight from the Maximum GCWR found in the chart. This is the maximum trailer weight your vehicle can tow and must fall below the maximum shown under Trailer Weight on the chart.

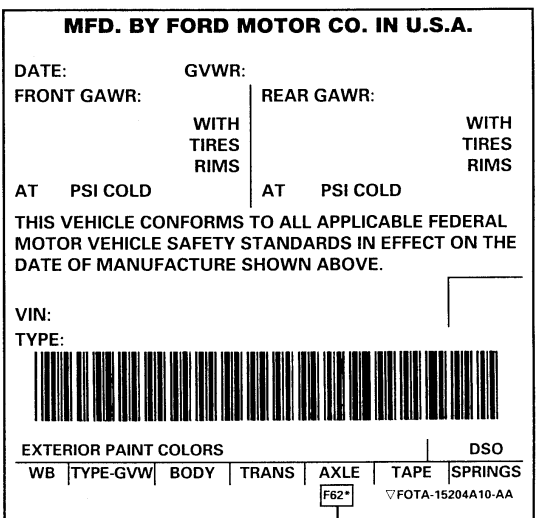

* First two digits refer to rear axle.

Rear Axle Codes

Code	Description	Capacity		Ratio
		Lbs.	Kgs	
82	Ford — Conventional	2,750	1,247	3.08
84	Ford — Conventional	2,750	1,247	3.45
86	Ford — Conventional	2,750	1,247	3.73
87	Ford — Conventional	2,750	1,247	4.10
91	Ford — Conventional	2,750	1,247	3.27
92	Ford — Conventional	2,750	1,247	3.08
96	Ford — Conventional	2,750	1,247	3.73
F6	Ford — Traction-Lok	2,750	1,247	3.73
F7	Ford — Traction-Lok	2,750	1,247	4.10
R5	Ford — Traction-Lok	2,750	1,247	3.55

1FTBR10 A 5GLA00001

VIN Code	Displacement		Cylinders	Fuel	Manufacturer
	Liter	CID			
A	2.3	140	4	Gasoline	Ford
U	3.0	182	6	Gasoline	Ford
X	4.0	245	6	Gasoline	Ford

Manual Transmissions

TRAILER TOWING TABLE 4x2 MANUAL TRANSMISSION				
GCWR (Gross Combined Weight Rating)/Trailer Weights				
Engine (EFI)	Rear Axle Ratio	Maximum GCWR Lb (Kg)	Trailer Weight Range Lb (Kg) (0-Maximum)	Maximum Frontal Area of Trailer Ft^2
REGULAR CAB 4x2				
2.3L	3.45	Not recommended for trailer towing		
2.3L	3.73	4,800 (2,177)	0-1,600 (0-725)	①
3.0L	3.45	5,000 (2,267)	0-1,800 (0-816)	①
3.0L	3.73	6,000 (2,721)	0-2,800 (0-1,270)	50
4.0L	3.08	5,000 (2,267)	0-1,700 (0-771)	①
4.0L	3.55	7,000 (3,175)	0-3,700 (0-1,678)	50
REGULAR CAB 4x2 (SPLASH OR SPECIAL SUSPENSION)				
2.3L	3.73	4,800 (2,177)	0-1,500 (0-680)	①
3.0L	3.73	5,300 (2,404)	0-2,000* (0-907)	①
4.0L	3.08	5,000 (2,267)	0-1,600 (0-725)	①
4.0L	3.55	5,400 (2,449)	0-2,000* (0-907)	①
SUPER CAB 4x2				
2.3L	3.73	4,800 (2,177)	0-1,300 (0-589)	①

TRAILER TOWING TABLE 4x2 MANUAL TRANSMISSION				
GCWR (Gross Combined Weight Rating)/Trailer Weights				
Engine (EFI)	Rear Axle Ratio	Maximum GCWR Lb (Kg)	Trailer Weight Range Lb (Kg) (0-Maximum)	Maximum Frontal Area of Trailer Ft^2
SUPER CAB 4x2 (Cont'd.)				
3.0L	3.45	5,000 (2,267)	0-1,500 (0-680)	①
3.0L	3.73	6,000 (2,721)	0-2,500 (0-1,133)	50
4.0L	3.08	5,000 (2,267)	0-1,500 (0-680)	①
4.0L	3.55	7,000 (3,175)	0-3,400 (0-1,542)	50
SUPER CAB 4x2 (SPLASH OR SPECIAL SUSPENSION)				
3.0L	3.73	5,700 (2,585)	0-2,000* (0-907)	①
4.0L	3.08	5,000 (2,267)	0-1,300 (0-589)	①
4.0L	3.55	5,700 (2,585)	0-2,000* (0-907)	①

NOTES:

* Optional payload is not available on 4x2 Splash or Special Suspension, therefore max trailer weight is limited to 2000# (907 kgs).

① Equal to frontal area of base vehicle.

- For high altitude operation, reduce GCW by 2% per 1,000 ft. (300 meters) elevation.
- For definition of terms used in this table see *'UNDERSTANDING LOADING/ TOWING INFORMATION'* earlier in this section.
- To determine the maximum trailer weight designed for your particular vehicle as equipped, follow the section called *'CALCULATING THE LOAD'* earlier in this section.
- Maximum trailer weights shown. The combined weight of the completed towing vehicle (including hitch, passengers and cargo) and the loaded trailer must not exceed the Gross Combined Weight Rating (GCWR).

TRAILER TOWING TABLE 4x4 MANUAL TRANSMISSION				
GCWR (Gross Combined Weight Rating)/Trailer Weights				
Engine (EFI)	Rear Axle Ratio	Maximum GCWR Lb (Kg)	Trailer Weight Range Lb (Kg) (0-Maximum)	Maximum Frontal Area of Trailer Ft^2
REGULAR CAB 4x4				
2.3L	4.10	4,800 (2,177)	0-1,300 (0-589)	①
3.0L	3.73	6,000 (2,721)	0-2,400 (0-1,088)	50
4.0L	3.27	6,000 (2,721)	0-2,000 (0-907)	50
4.0L	3.73	7,000 (3,175)	0-3,400 (0-1,542)	50
REGULAR CAB 4x4 (SPLASH)				
3.0L	3.73	6,000 (2,721)	0-2,500 (0-1,133)	50
4.0L	3.27	6,000 (2,721)	0-2,000 (0-907)	50
4.0L	3.73	7,000 (3,175)	0-3,400 (0-1,542)	50
SUPER CAB 4x4				
3.0L	3.73	6,000 (2,721)	0-2,100 (0-952)	50
4.0L	3.27	6,000 (2,721)	0-2,000 (0-907)	50
4.0L	3.73	7,000 (3,175)	0-3,000 (0-1,360)	50

TRAILER TOWING TABLE (Cont'd) 4x4 MANUAL TRANSMISSION				
GCWR (Gross Combined Weight Rating)/Trailer Weights				
Engine (EFI)	Rear Axle Ratio	Maximum GCWR Lb (Kg)	Trailer Weight Range Lb (Kg) (0-Maximum)	Maximum Frontal Area of Trailer Ft^2
SUPER CAB 4x4 (SPLASH)				
3.0L	3.73	6,000 (2,721)	0-2,200 (0-997)	50
4.0L	3.27	6,000 (2,721)	0-2,000 (0-907)	50
4.0L	3.73	7,000 (3,175)	0-3,100 (0-1,406)	50

NOTES:

① Equal to frontal area of base vehicle.

- For high altitude operation, reduce GCW by 2% per 1,000 ft. (300 meters) elevation.
- For definition of terms used in this table see *'UNDERSTANDING LOADING/TOWING INFORMATION'* earlier in this section.
- To determine the maximum trailer weight designed for your particular vehicle as equipped, follow the section called *'CALCULATING THE LOAD'* earlier in this section.
- Maximum trailer weights shown. The combined weight of the completed towing vehicle (including hitch, passengers and cargo) and the loaded trailer must not exceed the Gross Combined Weight Rating (GCWR).

Automatic Transmissions

TRAILER TOWING TABLE 4x2 AUTOMATIC TRANSMISSION				
GCWR (Gross Combined Weight Rating)/Trailer Weights				
Engine (EFI)	Rear Axle Ratio	Maximum GCWR Lb (Kg)	Trailer Weight Range Lb (Kg) (0-Maximum)	Maximum Frontal Area of Trailer Ft^2
REGULAR CAB 4x2				
2.3L	3.73	5,500 (2,494)	0-2,300 (0-1,043)	①
3.0L	3.45	7,000 (3,175)	0-3,700 (0-1,678)	50
3.0L	3.73	7,500 (3,401)	0-4,000 (0-1,814)	50
4.0L	3.08	6,000 (2,721)	0-2,700 (0-1,224)	50
4.0L	3.55	9,500 (4,309)	0-6,000 (0-2,721)	50
REGULAR CAB 4x2 (SPLASH OR SPECIAL SUSPENSION)				
2.3L	3.73	5,300 (2,404)	0-2,000* (0-907)	①
3.0L	3.73	5,400 (2,449)	0-2,000* (0-907)	①
4.0L	3.08	5,400 (2,449)	0-2,000* (0-907)	①
4.0L	3.55	5,400 (2,449)	0-2,000* (0-907)	①

TRAILER TOWING TABLE 4x2 AUTOMATIC TRANSMISSION				
GCWR (Gross Combined Weight Rating)/Trailer Weights				
Engine (EFI)	Rear Axle Ratio	Maximum GCWR Lb (Kg)	Trailer Weight Range Lb (Kg) (0-Maximum)	Maximum Frontal Area of Trailer Ft^2
SUPER CAB 4x2				
3.0L	3.73	7,500 (3,401)	0-4,000 (0-1,814)	50
4.0L	3.08	6,000 (2,721)	0-2,400 (0-1,088)	50
4.0L	3.55	9,500 (4,309)	0-5,900 (0-2,676)	50
SUPER CAB 4x2 (SPLASH OR SPECIAL SUSPENSION)				
3.0L	3.73	5,700 (2,585)	0-2,000* (0-907)	①
4.0L	3.08	5,800 (2,630)	0-2,000* (0-907)	①
4.0L	3.55	5,800 (2,630)	0-2,000* (0-907)	①

NOTES:

* Optional payload is not available on 4x2 Splash or Splash Sport Suspension, therefore max trailer weight is limited to 2000# (907 kgs).

① Equal to frontal area of base vehicle.

– For high altitude operation, reduce GCW by 2% per 1,000 ft. (300 meters) elevation.

– For definition of terms used in this table see *'UNDERSTANDING LOADING/ TOWING INFORMATION'* earlier in this section.

– To determine the maximum trailer weight designed for your particular vehicle as equipped, follow the section called *'CALCULATING THE LOAD'* earlier in this section.

– Maximum trailer weights shown. The combined weight of the completed towing vehicle (including hitch, passengers and cargo) and the loaded trailer must not exceed the Gross Combined Weight Rating (GCWR).

TRAILER TOWING TABLE 4x4 AUTOMATIC TRANSMISSION				
GCWR (Gross Combined Weight Rating)/Trailer Weights				
Engine (EFI)	Rear Axle Ratio	Maximum GCWR Lb (Kg)	Trailer Weight Range Lb (Kg) (0-Maximum)	Maximum Frontal Area of Trailer Ft^2
REGULAR CAB 4x4				
3.0L	3.73	7,500 (3,401)	0-3,900 (0-1,769)	50
3.0L	4.10	8,000 (3,628)	0-4,400 (0-1,995)	50
4.0L	3.27	7,500 (3,401)	0-3,800 (0-1,723)	50
4.0L	3.73	9,500 (4,309)	0-5,800 (0-2,630)	50
REGULAR CAB 4x4 (SPLASH)				
3.0L	3.73	7,500 (3,401)	0-3,900 (0-1,769)	50
3.0L	4.10	8,000 (3,628)	0-4,400 (0-1,995)	50
4.0L	3.27	7,500 (3,401)	0-3,800 (0-1,723)	50
4.0L	3.73	9,500 (4,309)	0-5,800 (0-2,630)	50

TRAILER TOWING TABLE (Cont'd.) 4x4 AUTOMATIC TRANSMISSION				
GCWR (Gross Combined Weight Rating)/Trailer Weights				
Engine (EFI)	Rear Axle Ratio	Maximum GCWR Lb (Kg)	Trailer Weight Range Lb (Kg) (0-Maximum)	Maximum Frontal Area of Trailer Ft^2
SUPER CAB 4x4				
3.0L	3.73	7,500 (3,401)	0-3,600 (0-1,632)	50
3.0L	4.10	8,000 (3,628)	0-4,100 (0-1,859)	50
4.0L	3.27	7,500 (3,401)	0-3,600 (0-1,632)	50
4.0L	3.73	9,500 (4,309)	0-5,600 (0-2,540)	50
SUPER CAB 4x4 (SPLASH)				
3.0L	3.73	7,500 (3,401)	0-3,700 (0-1,678)	50
3.0L	4.10	8,000 (3,628)	0-4,200 (0-1,905)	50
4.0L	3.27	7,500 (3,401)	0-3,600 (0-1,632)	50
4.0L	3.73	9,500 (4,309)	0-5,600 (0-2,540)	50

NOTES:
- For high altitude operation, reduce GCW by 2% per 1,000 ft. (300 meters) elevation.
- For definition of terms used in this table see *'UNDERSTANDING LOADING/ TOWING INFORMATION'* earlier in this section.
- To determine the maximum trailer weight designed for your particular vehicle as equipped, follow the section called *'CALCULATING THE LOAD'* earlier in this section.
- Maximum trailer weights shown. The combined weight of the completed towing vehicle (including hitch, passengers and cargo) and the loaded trailer must not exceed the Gross Combined Weight Rating (GCWR).

Preparing to Tow

For your safety and for the good of your vehicle, use the right equipment for the type of trailer you tow. Also, make sure that all towing equipment is properly attached to your vehicle. If you are not certain that you are using the right equipment in the proper manner, see your Ford or Lincoln-Mercury dealer.

Hitches

For towing trailers up to 2,000 lb (907 kg), use a weight carrying hitch and ball which uniformly distributes the trailer tongue loads through the underbody structure. Use a frame-mounted weight distributing hitch for trailers over 2,000 lb (907 kg).

Do not install a single or multi-clamp type bumper hitch, or a hitch which attaches to the axle. Underbody mounted hitches are acceptable if installed properly. Follow towing instructions of a reputable rental agency.

Whenever a trailer hitch and hardware are removed, make sure all mounting holes in the underbody are properly sealed to prevent noxious gases or water from entering.

Step bumper (If equipped)

The optional step bumper has a built-in hitch and only requires a ball with a 3/4 inch shank diameter. The step bumper has a Class I capability (2,000 lb/907 kg trailer weight and 200 lb/91 kg tongue weight).

NOTE: The rated capacities (as shown in this guide) for trailer towing with the factory bumper are only valid when the trailer hitch ball is installed directly into the ball hole in the bumper. Addition of bracketry to either lower the hitch ball position or extend the hitch ball rearward will significantly increase the loads on the bumper and its attachments. This can result in the failure of the bumper or the bumper attachments. Use of any type of hitch extensions should be considered abuse.

If it is necessary to relocate the trailer hitch ball position a frame mounted trailer hitch must be installed.

Safety Chains

Always use safety chains between your vehicle and trailer. Cross chains under the trailer tongue and allow slack for turning corners. Connect safety chains to the vehicle frame or hook retainers. **Never attach chains to the bumper.**

Trailer Brakes

Separate trailer brakes are required on most towed vehicles weighing over 1,500 lb (680 kg).

⚠WARNING
Do not connect a trailer's hydraulic brake system directly to your vehicle's brake system. Your vehicle may not have enough braking power and your chances of having a collision greatly increase.

Trailer Lamps

Make sure your trailer lamps conform to Federal and local regulations.

Class I and Class II Trailer Tow electrical wiring provides two circuits (right hand and left hand) to operate trailer stop/turn tail lamps. Each stop/turn circuit will operate one combination stop/turn light bulb (# 1157, 3157, 2357, or 3357) on the trailer. Never add more than one trailer light bulb to one circuit.

⚠WARNING

Always replace a fuse with one that has the specified amperage rating. Using a fuse with a higher amperage rating can cause severe wire damage and could start a fire.

Driving while you tow

Be especially careful when driving while you tow a trailer. Never drive faster than 45 mph (70 km/h) when you tow in hilly country on hot days. Also, anticipate stops so that you can brake gradually.

If you use the speed control while you are towing on very long, steep grades, the speed control may shut off.

When towing a trailer in hilly terrain, with a vehicle equipped with a 4R44E/4R55E transmission, you may wish to operate in O/D OFF (3rd gear) rather than Ⓓ (Overdrive). This will eliminate excessive downshifting and upshifting to maintain speed. Shift back to Ⓓ (Overdrive) whenever practical for optimum powertrain cooling and fuel economy. This can be accomplished by pushing in the transmission control switch which is located on the end of the gearshift lever.

When descending a steep grade with a trailer, operate in Drive rather than Overdrive. If additional braking is needed, shift the automatic transmission gearshift into 2 (Second) gear or 1 (Low).

Servicing Your Vehicle If You Tow

If you tow a trailer for a long distance, your vehicle will need to be serviced more frequently than usual. Refer to the *Maintenance Schedule and Record* booklet for additional information.

Trailer towing tips

Before starting on a trip, practice turning, stopping and backing in an area away from heavy traffic. Get to know the “feel” of the vehicle/trailer combination.

Practice backing up. Back up very slowly, with someone outside at the rear of your trailer to guide you. Place your hand at the bottom of the steering wheel and move it in the direction you want the rear of the trailer to swing. Slight movement of the steering wheel results in a much larger movement of the rear of the trailer.

Allow more room for stopping with a trailer attached. Trailer brakes should be applied first, whether manually or automatically controlled, when approaching a stop.

For a good handling truck-trailer combination, the trailer tongue load should be approximately 10-15% of the loaded trailer weight.

Make a thorough check of your equipment before starting out on the road. After you have traveled about 50 miles (80 km) stop in a protected area and double-check your hitch and electrical connections. Also check trailer wheel lug nuts for tightness.

When turning, drive slightly beyond the normal turning point so the trailer wheels will clear curbs or other obstructions.

When stopped in traffic for long periods of time in hot weather, place the gearshift selector lever in P (Park) to increase the engine idle speed. This aids in engine cooling and air conditioner efficiency. If the engine overheats, rotate the function selector control knob to panel position to stop the compressor and increase the engine speed for a short time.

⚠WARNING
Do not tow a trailer when using a temporary spare tire.

Vehicles with trailers should not be parked on a grade. However, if you must park on a grade, place wheel chocks under the trailer's wheels as follows:

- Apply the brake pedal and hold.
- Have another person place the wheel chocks under the trailer wheels.
- With the chocks in place, release the brake pedal, making sure the chocks are holding.
- For automatic transmissions — apply the parking brake by pressing the service brake pedal down firmly with your right foot while applying the parking brake pedal with your left foot.
- For manual transmissions — apply the service brake and shift into N (Neutral) while still maintaining pressure on the service brake pedal. Set the parking brake fully.
- Shift an automatic transmission into Park (P). Put the gearshift of a manual transmission in Reverse. If your vehicle is equipped with four-wheel drive make sure the transfer case is not in Neutral.

To start, after being parked on a grade:

- Apply the brake pedal and hold.
- Start the engine.
- Shift transmission into gear and release the parking brake.
- Release the brake pedal and move the vehicle uphill to free the wheel chocks.
- Apply the brake pedal and hold while another person retrieves the chocks.

Suspension Modifications

The suspension and steering systems on your vehicle have been designed and tested to provide both safe, predictable performance (whether loaded or empty) as well as durable load carrying capability. Any modifications to the suspension or steering systems can reduce your vehicle's performance capability and adversely affect driver and passenger safety. Ford recommends that you DO NOT make modifications such as adding or removing parts (like lift kits, stabilizer bars or snowplowing equipment) or by using replacement parts non-equivalent to the original factory equipment.

Snowplowing

⚠WARNING
Do not use this vehicle for snowplowing.

Jump-Starting Your Vehicle

Your vehicle's battery may die if you leave the lights on or any electrical equipment on after you turn the engine off. If this happens, you may be able to jump-start your vehicle with a booster battery.

⚠WARNING

The gases around the battery can explode if exposed to flames, sparks, or lit cigarettes. An explosion could result in injury or vehicle damage.

⚠WARNING

To protect yourself when charging a battery, always shield your face and eyes. Make sure that you can breathe fresh air.

⚠WARNING

Applying too much pressure on the ends when lifting a battery could cause acid to spill. Lift the battery with a carrier or with your hands on the opposite corners.

⚠WARNING

Batteries contain sulfuric acid which burns skin, eyes, and clothing.

If the acid touches someone's skin, eyes, or clothing, immediately flush the area with water for at least 15 minutes. If someone swallows the acid, have him or her drink lots of milk or water first, then Milk of Magnesia, a beaten egg, or vegetable oil. Call a doctor immediately.

⚠WARNING

Do not push-start your vehicle. You could damage the catalytic converter. For further information, see *Jumper Cables* in the Index.

⚠WARNING

To avoid damage or injury, follow these directions in the order they are given. If in doubt, call for road service.

Preparing Your Vehicle

1. Your vehicle has a 12-volt starting system, so you need to use a 12-volt jumper system. You will damage your starting motor, ignition system, and other electrical parts if you connect them to a 24-volt power supply (either two 12-volt batteries in series or a 24-volt generator set).
2. Do not disconnect the battery of the disabled vehicle. You could damage the vehicle's electrical system.
3. Park the booster vehicle close to the hood of the disabled vehicle. **Make sure the vehicles do not touch each other.** Set the parking brake on both vehicles and stay clear of the engine cooling fan and other moving parts.
4. Check all battery terminals and remove any excessive corrosion before you attach the jumper cables.
5. Turn on the heater fan in both vehicles. Turning on the fan helps protect the electrical system from voltage surges. Turn off all other switches and lights in both vehicles to prevent possible damage to either vehicle's electrical systems.

Connecting the jumper cables

1. Connect one end of the first jumper cable to the positive (+) terminal of the discharged battery. (You can connect either jumper cable to the positive (+) terminal, as long as you use the same cable for both positive terminals.) Most jumper cables have a red cable and a black cable. The red cable is generally used for the positive terminals and the black for the negative ones.
2. Connect the other end of the first cable to the positive (+) terminal of the booster battery.
3. Connect one end of the second cable to the negative (−) terminal of the booster battery — NOT to the discharged battery.
4. Connect the other end of that cable to a good metallic surface on the engine or frame of the disabled vehicle. The following illustration shows where you can find a metallic surface.

⚠WARNING

Do not connect the end of the second cable to the negative (−) terminal of the battery to be jumped. A spark may cause an explosion of the gases that surround the battery.

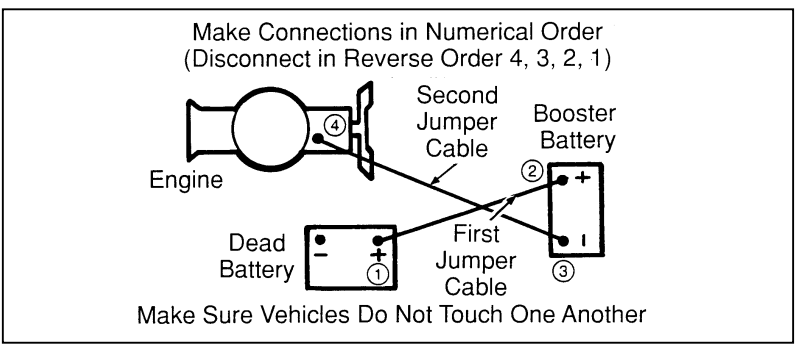

Attaching jumper cables

Jump-Starting

1. Make sure that the jumper cables are not in the way of moving engine parts, then start the booster vehicle. Run the engine at a moderate speed.
2. Let the discharged battery charge for a few minutes and then start the disabled vehicle. It may take a couple of tries before the vehicle starts. If the vehicle does not start after several attempts, there may be a different problem.
3. When both vehicles are running, let them idle for a few minutes to charge the discharged battery.

Removing jumper cables

1. **Always remove the jumper cables in the reverse order.** Remove the negative (−) end of the jumper cable from the metallic surface on the engine or frame of the disabled vehicle.
2. Remove the negative (−) cable from the booster battery.
3. Remove the positive (+) cable from the booster battery.

4. Remove the other end of the positive (+) cable from the discharged battery.

After the vehicle is started, let it idle for a while to let the engine “relearn” its idle conditions. Drive it around for a while with all electrical accessories turned off to let the battery recharge. Driveability may be deteriorated slightly until all drive modes are “relearned.” **You may need to use a battery charger to fully recharge the battery.**

If you need to replace your battery, see *Battery* in the *Servicing Your Ranger* chapter.

Changing a Tire

If you get a flat tire while you are driving, do not apply the brake heavily. Instead, gradually decrease the speed. Hold the steering wheel firmly and slowly move to a safe place on the side of the road. Park on a level spot, turn off the ignition, set the parking brake, and turn on the hazard flashers.

The Conventional Spare Tire

If you have the conventional spare tire, you can use it as a spare or as a regular tire. This spare tire is identical to the other tires that come with your vehicle, although the wheel may not match.

⚠WARNING
To avoid injury, never run the engine with one wheel off the ground, such as when changing a tire.

The Temporary Spare Tire

You may have a high pressure temporary spare tire. This spare tire is smaller than a regular tire and is designed for emergency use only. Use it only when you get a flat tire and replace it as soon as you can. This spare tire is marked with the words “TEMPORARY USE ONLY” so that you can easily identify it.

It is not recommended that the vehicle be operated in the 4WD modes with a temporary spare. If 4WD operation is necessary, do not operate at speeds above 10 mph (16 km/h) or for distances above 50 miles (80 km). Extended operation in 4WD with a temporary spare may result in damage to powertrain components.

⚠WARNING

If you use the temporary spare tire continuously or do not follow these precautions, the tire could fail, causing you to lose control of the vehicle, possibly injuring yourself or others.

⚠WARNING

To avoid injury, never run the engine with one wheel off the ground, such as when changing a tire.

Extended use of other than matching size spare tires on a Traction-Lok axle could result in a permanent reduction in effectiveness. This loss of effectiveness does not affect normal driving and should not be noticeable to the driver.

When you drive with the temporary spare tire, DO NOT:

- exceed 50 mph (80 km/h) under any circumstances.
- load your vehicle so that it is heavier than the maximum vehicle load rating listed on the tire decal.
- tow a trailer.
- use tire chains on this tire.
- try to repair the temporary spare tire or remove it from its wheel.
- use the wheel for any other type of vehicle.
- engage four-wheel drive on dry, hard-surfaced roads.

- drive through an automatic car wash with this tire. Because the temporary spare tire is smaller than a conventional tire, it reduces the ground clearance. Your vehicle may get caught in the rails and it could be damaged.

Spare Tire Location

The spare tire for your vehicle is stowed at the rear under the frame.

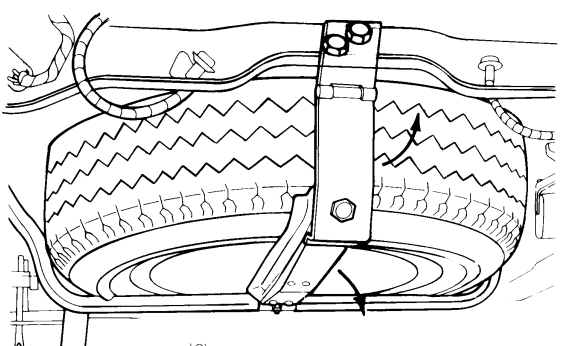

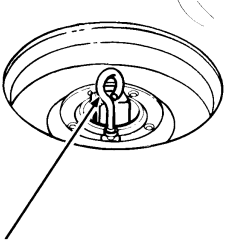

1. Remove bolt with lug wrench.
2. Swing hinge away and lower the channel.
3. Remove retaining bolt by inserting the lug wrench through the top of the bolt and turning.
4. To replace tire, reverse procedure, and install tire with the valve stem pointed down. Tighten the retaining bolt snugly and test for tire movement by pressing or kicking it.

Spare tire stowage

To remove the spare tire:

1. Use the hex portion of the lug nut wrench to remove the bolt that fastens the hinge to the channel.
2. Swing the hinge away and lower the channel.
3. Unscrew the retaining bolt using the tapered end of the lug nut wrench through the eye of the bolt.
4. Slide the spare tire out.

To stow spare tire:

1. Position spare tire, valve stem down, so it is balanced on the support.
2. Replace and tighten retaining bolt using the tapered end of the lug nut wrench through the eye of the bolt.
3. Raise channel to hinge and line up the bolt hole.
4. Install bolt and tighten with the wrench.

NOTE: If your vehicle is equipped with P265 75R15 AT tires or P235 75R15 AT tires do not stow a flat or inflated full size tire in the spare tire carrier. The carrier is designed to hold the temporary spare which comes with your vehicle. The stowage of a full size tire in the spare tire carrier may damage the tire or the vehicle. The flat full size tire should be stowed and tied down in the pickup box bed until it can be repaired.

⚠WARNING
Make sure the spare tire and jacking equipment are stowed and secured in the proper storage location.

Preparing to Change the Tire

NOTE: To lift your vehicle by other than the front or rear jacking points, be sure to use only hoist adapters with a wide contact surface.

1. Make sure that your vehicle will not move or roll. If you have an automatic transmission, put the gearshift in Park. If you have a manual transmission, put the gearshift in Reverse. Set the parking brake and block the wheel that is diagonally opposite the tire that you are changing.

NOTE: Make sure the ignition is in the OFF position.

If you have a four-wheel drive vehicles with manual locking hubs, put transfer case lever in 2H, 4H, or 4L.

When one of the back wheels is off the ground, the transmission alone will not prevent the vehicle from moving or slipping off the jack, even if the vehicle is in P (Park) or 1 (First). To prevent the vehicle from moving when you change a tire, be sure the parking brake is set, then block the wheel (both directions) that is diagonally opposite (other side and end of the vehicle) to the tire that is being changed.

⚠WARNING

If the vehicle slips off the jack, someone could be seriously injured.

⚠WARNING

Do not leave the vehicle unattended with the transfer case in the N (Neutral) position. Always set the parking brake fully and turn off the ignition when leaving the vehicle.

2. Get out the spare tire and jack.

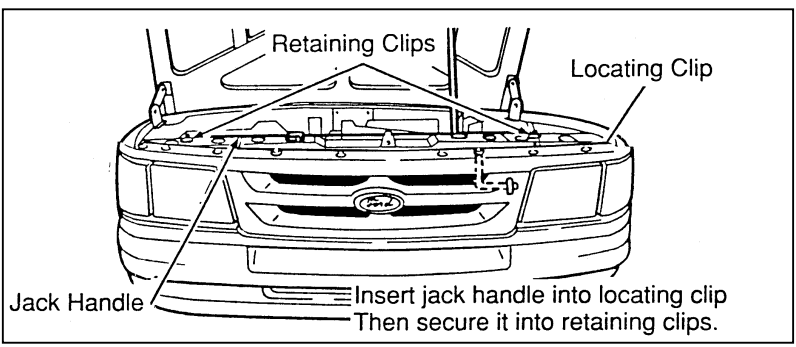

Jack handle location and installation

The jack and lug nut wrench are stowed behind the passenger's seat. The jack handle is stowed under the hood on the radiator support.

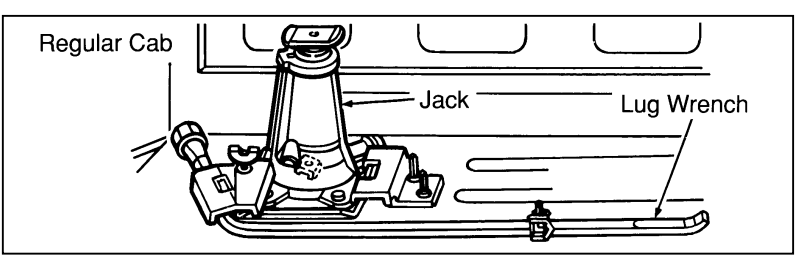

Jack stowage

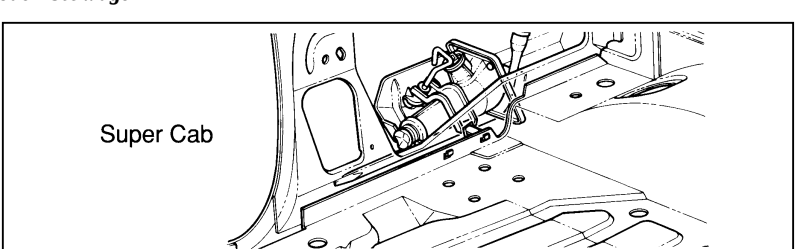

Jack stowage

3. Insert the tapered end of the lug nut wrench behind wheel covers or hubcaps and twist off.

⚠WARNING

Use only the lug nut wrench provided to remove wheel ornaments. Not using the tapered end of the lug nut wrench at the pry-off notches may result in damage to the finish of the wheel and ornament.

⚠WARNING

Not using the tapered end of the lug nut wrench at the pry-off notches may result in damage to the finish of the wheel and ornament.

4. Loosen the wheel nuts by pulling up on the handle of the lug nut wrench about one-half turn (counterclockwise). Do not remove the wheel lug nuts until you raise the tire off the ground.

5. Insert the jack handle into the jack and use the handle to slide the jack under the vehicle.

⚠WARNING

To avoid injury, never run the engine with one wheel off the ground, such as when changing a tire.

Removing and Replacing the Tire

1. Positioning the jack

   a. To raise a front wheel, place the jack directly under the shock absorber so that it contacts the bottom of the shock.

   b. To raise a rear tire place the jack under the rear axle between the spring shackle bolts.

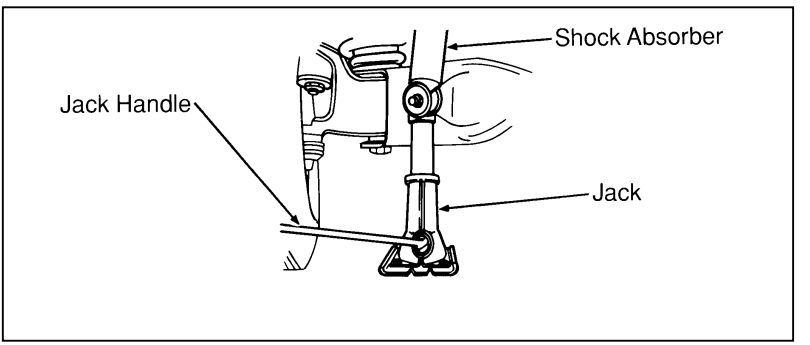

Front axle jacking point

c. Turn the jack handle clockwise until the wheel is a maximum of one inch off the ground.

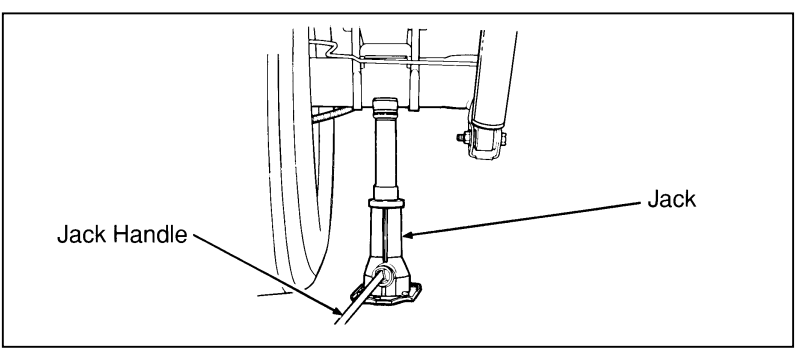

Rear axle jacking point

NOTE: Do not use the differential housing as a lift point.

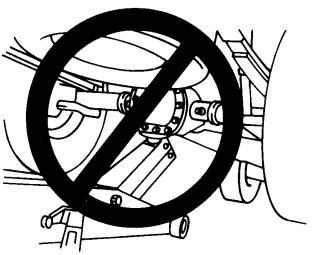

NEVER USE THE DIFFERENTIAL HOUSING AS A LIFT POINT.

⚠WARNING

To lessen the risk of personal injury, do not put any part of your body under the vehicle while changing a tire. Do not start the engine when your vehicle is on the jack. The jack is only meant for changing the tire.

2. Remove the lug nuts with the lug nut wrench.
3. Replace the flat tire with the spare tire.
4. Thread the lug nuts on the wheel studs with the beveled face toward the wheel. Use the lug nut wrench to screw the lug nut snug against the wheel but do not tighten.
5. Lower the vehicle by turning the jack handle counterclockwise.
6. Remove the jack and fully tighten the lug nuts in the order shown in the following illustration.

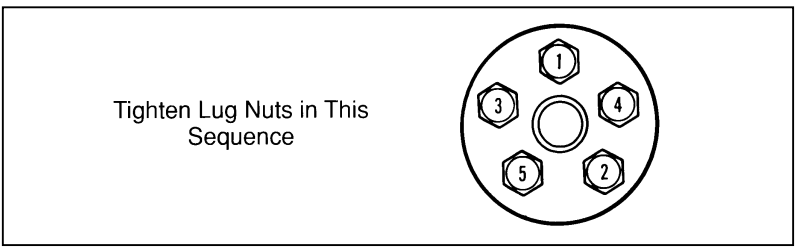

Lug nut tightening sequence

⚠WARNING

Use of wheels or lug nuts other than original equipment could cause damage to the wheel or mounting system and allow the wheels to come off while the vehicle is in motion.

7. Replace any wheel covers, ornaments, or hub caps that your vehicle has. Make sure that they are screwed or snapped into place.
8. Put the tire, jack, and wrench away. (Make sure jack is securely fastened so it does not rattle when you drive.)
9. Unblock the wheels.

NOTE: If your vehicle is equipped with P265 75R15 AT tires or P235 75R15 AT tires do not stow a flat or inflated full size tire in the spare tire carrier. The carrier is designed to hold the temporary spare which comes with your vehicle. The stowage of a full size tire in the spare tire carrier may damage the tire or the vehicle. The flat full size tire should be stowed and tied down in the pickup box bed until it can be repaired.

Retighten the wheel lug nuts to the specified torque at 500 miles (800 km) of new vehicle operation and at intervals specified in the *Maintenance Schedule and Record* booklet.

Also retighten to the specified torque at 500 miles (800 km) of operation after any wheel change or any time the lug nuts are loosened.

⚠WARNING

Failure to retighten wheel lug nuts at mileages specified could allow wheels to come off while the vehicle is in motion.

Model	Bolt Size	Wheel Lug Nut Torque*	
		Ft-Lb	N•m
Ranger	1/2-20	100	135

* Torque specification is for nut and bolt threads free of dirt and rust. Do not use oil or grease on threads. Use only Ford recommended replacement fasteners.

The Fuel Pump Shut-off Switch

If the engine cranks but does not start or if you have had a collision, the fuel pump shut-off switch may have been triggered. The shut-off switch is a device that stops the fuel pump when your vehicle has been involved in a substantial jolt.

For information on how to check and reset the fuel pump shut-off switch, see *Fuel pump shut-off switch* in the Index.

Towing Your Vehicle

If you need to have your vehicle towed, contact a professional towing service or, if you are a member, your roadside assistance center.

Ranger 4x2/4x4

The recommended method to tow your Ranger is with flatbed or wheel lift equipment. However, slingbelt towing is acceptable.

Ranger without rear bumper

The recommended method to tow your Ranger is with flatbed or wheel lift equipment. However, slingbelt towing is acceptable. Be sure to remove the undervehicle spare tire before attaching slingbelt towing equipment.

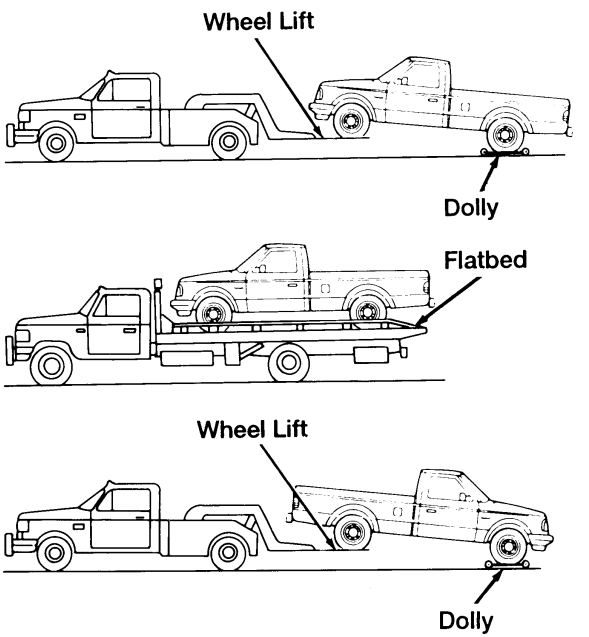

When calling for a tow truck, tell the operator what kind of vehicle you have. A towing manual is available from Ford Motor Company for all authorized tow truck operators. Have your tow truck driver refer to this manual for the proper hook-up and towing procedures for your vehicle.

Recreational Towing — All wheels on the ground

Towing your vehicle can be successfully performed by following the appropriate guidelines for the type of powertrain on the vehicle to be towed. The following guidelines, by powertrain combination, are designed to ensure that the transmission is not damaged due to insufficient lubrication.

4 x 2 — Automatic transmission

- Release the parking brake.
- Place transmission gearshift in N (neutral).
- Maximum speed is 35 mph (56 km/h).
- Maximum distance is 50 miles (80 km).

If a distance of 50 miles (80 km) or speed of 35 mph (56 km/h) will be exceeded, you **must**:

- Disconnect the driveshaft at the rear differential and properly support it under the vehicle.
- Mark the driveshaft and axle flanges to ensure proper position when reconnecting the driveshaft. Refer to service manual for proper driveshaft fastener torque specification. (See the *Accessories* chapter for information on ordering service manuals.)

⚠WARNING
When disconnecting/installing the driveshaft, the parking brake must be set and the wheels blocked to ensure the vehicle does not roll.

- Maximum speed is 55 mph (88 km/h), unlimited distance.

4 x 2 — Manual transmission

- Release the parking brake.
- Place the transmission gearshift in the neutral position.
- Maximum speed is limited by towing equipment manufacturer's recommendation, unlimited distance.

4 x 4 — Manual shift transfer case

- Release the parking brake.
- Place the transmission gearshift in the neutral position.
- Place the transfer case gearshift in the neutral position.
- Set the manual locking hubs in the FREE position.
- Maximum speed is 55 mph (88 km/h), unlimited distance.

4 x 4 Electric shift transfer case

- Release the parking brake.
- Place the transmission gearshift in the neutral position.
- Ensure the transfer case is in 2H and the hubs are unlocked.

NOTE: **Both the 4WD and 4WD Low indicator lights in the instrument panel will be off when the 4WD switch is in 2WD.**

For automatic transmissions:

- Maximum speed is 35 mph (56 km/h).
- Maximum distance is 50 miles (80 km).

If a distance of 50 miles (80 km) or speed of 35 mph (56 km/h) will be exceeded, you **must**:

- Remove the rear driveshaft.

- Mark the driveshaft and transfer case/axle flanges to ensure proper position when installing the driveshaft. Refer to service manual for proper driveshaft torque specification.

⚠WARNING
When disconnecting/installing the driveshaft, the parking brake must be set and the wheels blocked to ensure the vehicle does not roll.

- Maximum speed is 55 mph (88 km/h), unlimited distance.

For manual transmissions:

- Maximum speed is 55 mph (88 km/h), unlimited distance.

Limited vehicle operation, such as driving the vehicle while at a campsite, can be accomplished with the rear driveshaft **removed** by using the front drive to propel the vehicle. To operate the vehicle in this condition, you **must** follow the following guidelines:

- Place the transfer case in 4WD by rotating 4WD switch to 4WD HIGH.
- Drive the vehicle **only** on good surface roads to avoid excessive loads on the front-wheel drive system.
- Maximum speed is 35 mph (56 km/h).
- Maximum distance is 50 miles (80 km).
- Avoid quick acceleration and steep grades.

To return the vehicle to a towable condition, you **must**:

- Place the transfer case in 2WD by rotating the 4WD switch to 2WD.

NOTE: Both the 4WD and 4WD Low indicator lights in the instrument cluster will be off when the transfer case is in 2WD.

- After 2WD is selected, the front hubs must be “unlocked” by moving the vehicle in reverse direction for a minimum of ten feet.
- Confirm the front hubs are unlocked by inspecting the front drive shaft to verify it does not turn when the vehicle is towed.

In addition to the above guidelines, it is recommended that you follow the instructions provided by the manufacturer of the towing apparatus.

Roadside Assistance

Ford Motor Company has set up a 24-hour, seven-day-a-week hotline with trained operators who put you in touch with the help you need if you experience a problem with your vehicle. This complimentary service is provided to you throughout your warranty period of 3 years or 36,000 miles (60,000 km), whichever comes first. To purchase Roadside Assistance coverages beyond this period (available through Ford Auto Club in the United States or Ford and Lincoln-Mercury dealers in Canada), contact your Ford or Lincoln-Mercury dealer. Additional Roadside Assistance coverage is unavailable in Puerto Rico and the Virgin Islands.

Roadside Assistance will cover the following:

- Mount your spare if you have a flat tire.
- Jump-start your battery if it is dead.
- Unlock your vehicle if you are locked out.
- Bring you fuel if you run out.
- Tow your vehicle if you are stranded. Even non-warranty related tows, like accidents or getting stuck in mud or snow, are covered (some exclusions apply, such as impound towing and repossession).

How to use Roadside Assistance

Your Roadside Assistance identification card can be found in the Owner Guide portfolio in your glove compartment. Complete the card and place it in your wallet for quick reference.

To receive roadside assistance in the United States call 1-800-241-FORD (in Canada call 1-800-665-2006).

Should you need to arrange for roadside assistance yourself, Ford Motor Company will reimburse the reasonable cost. To obtain information about reimbursement call 1-800-241-FORD (in Canada call 1-800-665-2006).

If You Have a Service Problem

Ford Motor Company has authorized Ford and Lincoln-Mercury dealerships that can service your vehicle for you. This chapter tells you how to get service or maintenance for your vehicle.

Service/Maintenance Concerns (U.S. or Canada)

Ford recommends taking your vehicle to your selling dealer who wants to ensure your continued satisfaction. You may, however, take your vehicle to any authorized Ford or Lincoln-Mercury dealer. In most cases, your dealer will be able to resolve your concern.

If you are not satisfied with the service you received from your dealership's service department, talk to the service manager at the dealership, or if you still are not satisfied, talk to the owner or general manager of the dealership. In most cases, you will have your concern resolved at this level.

If you are away from home when your vehicle needs to be serviced, or if you need more help than the dealer gave you, contact the Ford Customer Assistance Center to find an authorized dealership that may be able to help you.

Please have the following information available when contacting Ford Customer Assistance:

- your telephone number (both business and home)
- the name of the dealer and the city where the dealership is located
- the year and make of your vehicle
- the date purchased
- the current mileage on your vehicle
- your Vehicle Identification Number (VIN) listed on your owner card and/or your vehicle ownership license

In the United States, contact:

Ford Motor Company
Customer Assistance Center
300 Renaissance Center
P.O. Box 43360
Detroit Michigan 48243
1-800-392-3673 (FORD)
(TDD for the hearing impaired: 1-800-232-5952)

In Canada, contact:

Customer Assistance Centre
Ford Motor Company of Canada, Limited
P.O. Box 2000
Oakville, Ontario L6J 5E4
1-800-565-3673 (FORD)

If you still have a service or product complaint, you may wish to contact the Dispute Settlement Board (U.S. only).

The Dispute Settlement Board (U.S. Only)

The Dispute Settlement Board is a voluntary, independent dispute-settlement program available free to owners or lessees of qualifying Ford Motor Company vehicles.

The Dispute Settlement Board may not be available in all states. Ford Motor Company reserves the right to change eligibility limitations, modify procedures and/or to discontinue this process at any time without notice and without incurring obligations.

What Kind of Cases Does the Board Review?

The Board reviews unresolved warranty performance complaints on Ford, Mercury and Lincoln cars and Ford and Mercury Light Trucks under warranty that have not been resolved by a dealer or Ford Motor Company, except those involving:

- A non-Ford product
- A non-Ford dealership
- A vehicle sales transaction
- A request for reimbursement of consequential expenses unless incidental to a service or product complaint being reviewed
- Items not covered by your warranty
- Alleged liability claims
- Property damage where such damage is significant when compared to the economic loss alleged under the warranty dispute
- Cases currently in litigation
- Vehicles not used primarily for personal, family, or household purposes

NOTE: Complaints involving vehicles on which applicable express written new vehicle warranties have expired at receipt of your application are not eligible. Eligibility may differ according to state law. For example, see the unique brochure for California purchasers/lessees.

How Does the Board Work?

The Board has four members:

- three consumer representatives
- a Ford or Lincoln-Mercury dealer

Consumer candidates for Board membership are recruited and trained by an independent consulting firm. Dealers are chosen because of their business leadership qualities.

If the involved vehicle is within 36 months and 36,000 miles of the date of delivery (warranty start date), you have a right to make an oral presentation before the Board by indicating your choice on the application. Also, oral presentations may be requested by the Board. A decision is made by the Board by simple majority vote.

Board members review all the materials related to each complaint and, based on the available information, arrive at a fair and impartial decision. Decisions are based on the written statements and any oral presentations made by each of the involved parties.

Because the Board usually meets only once a month, some cases will take longer than 30 days to be reviewed. The Board will make every effort to resolve each case within 40 days after it receives the customer application form.

After your case has been reviewed, the Board will mail you its decision in writing. It will also provide you with a form to indicate your acceptance or rejection of an award decision. The decisions of the Board are binding on the dealer and Ford, but customers may have other options available to them under state or federal law.

The decisions of the Board, however, may be introduced into evidence by any party in subsequent legal proceedings that may be initiated.

How Do You Contact the Board?

Write to the Board at the following address to request a brochure/application. You will be sent a brochure and a one-page customer application form. The form should be completed and mailed to the same address.

Dispute Settlement Board
P.O. Box 5120
Southfield, MI 48086-5120

What is the Review Process?

Your application will be reviewed and if it is determined to be eligible, you will receive an acknowledgment indicating the file number assigned to your application and the local Board address. At the same time, your dealer and Ford Motor Company representative are asked to submit statements.

To review your case properly, the Board needs the following information:

- legible copies of all documents and maintenance or repair orders that relate to the case
- the year, make, model, and vehicle identification number (VIN)
- the date you bought your vehicle
- the date of repair and the mileage at the time of repair
- the current mileage
- the name of the dealer who sold you the vehicle or who serviced your vehicle

- a brief description of your unresolved complaint
- a brief summary of actions that were taken with the dealer and Ford Motor Company
- the names (if known) of all people you contacted at the dealership
- a description of the action you want done to resolve your concern.

Should your application NOT qualify for review, an explanation will be mailed to you.

Reporting Safety Defects (U.S. Only)

If you believe that your vehicle has a defect which could cause a crash or could cause injury or death, you should immediately inform the National Highway Traffic Safety Administration (NHTSA) in addition to notifying Ford Motor Company.

If NHTSA receives similar complaints, it may open an investigation, and if it finds that a safety defect exists in a group of vehicles, it may order a recall and remedy campaign. However, NHTSA cannot become involved in individual problems between you, your dealer, or Ford Motor Company.

To contact NHTSA, you may either call the Auto Safety Hotline toll-free at 1-800-424-9393 (or 366-0123 in the Washington, D.C. area) or write to: NHTSA, U.S. Department of Transportation, 400 Seventh Street, Washington D.C. 20590. You can also obtain other information about motor vehicle safety from the Hotline.

Ford of Canada Customer Assistance

Ford Motor Company of Canada, Limited

If you live in Canada and have any questions or concerns that the dealership cannot answer, contact the Customer Assistance Centre.

Ford Motor Company of Canada, Limited
Customer Assistance Centre
P.O. Box 2000
Oakville, Ontario L6J 5E4
1-800-565-3673 (FORD)

Please have the following information available when contacting the Customer Assistance Centre:

- your telephone number (both business and home)
- your Vehicle Identification Number (VIN) listed on your owner card and/or your vehicle ownership license.
- the year and make of your vehicle
- the date purchased
- the name of the dealer and the city where the dealership is located
- the current mileage on your vehicle.

Mediation/Arbitration Program (Canada only)

In those cases where you continue to feel that the efforts by Ford and the dealer to resolve a factory-related vehicle service concern have been unsatisfactory, Ford of Canada participates in an impartial third party mediation/arbitration program administered by the Canadian Motor Vehicle Arbitration Plan (CAMVAP).

The CAMVAP program is a straight-forward and relatively speedy alternative to resolve a disagreement when all other efforts to produce a settlement have failed. This procedure is without cost to you and is designed to eliminate the need for lengthy and expensive legal proceedings.

In the CAMVAP program, impartial third-party Arbitrators conduct hearings at mutually convenient times and places in an informal environment. These impartial Arbitrators review the positions of the parties, make decisions and, where appropriate, render awards to resolve disputes. CAMVAP decisions are fast, fair and final as the arbitrator's award is binding on both you and Ford of Canada.

CAMVAP services are available in all territories and provinces, except Quebec. For more information, without charge or obligation, call your CAMVAP Provincial Administrator directly at 1-800-207-0685.

Getting Help Outside the U.S. and Canada

Before you export your vehicle to a foreign country, contact the appropriate foreign embassy or consulate to make sure local regulations do not prevent you from registering your vehicle. Officials at the embassy can also help you decide whether you should import your vehicle to that country.

Officials at the embassy or consulate can tell you where to get unleaded fuel. If you cannot get unleaded fuel or can get only fuel with an anti-knock index that is lower than your vehicle

needs, contact a district or owner relations office before you leave the U.S. or Canada.

Use of leaded fuel in your vehicle without a proper conversion may damage the effectiveness of your emissions control system and may cause engine knocking or serious engine damage. Ford Motor Company is not responsible for any damage that is caused by use of improper fuel.

You may also have difficulty importing your vehicle back into the U.S. if you use leaded fuel.

If your vehicle must be serviced while you are traveling or living in Central or South America, the Caribbean, or the Middle East, contact the nearest Ford dealership. If the dealership cannot help you, write to:

FORD MOTOR COMPANY
WORLDWIDE EXPORT OPERATIONS
1555 Fairlane Drive
Fairlane Business Park #3
Allen Park, Michigan 48101
U.S.A.
Telephone: (313) 594-4857
Fax: (313) 390-0804

If you are in other foreign countries, contact the nearest Ford dealership. If the dealership cannot help you, they can direct you to the appropriate Ford affiliate office.

If you buy your vehicle in North America and then relocate outside of the U.S. or Canada, register your Vehicle Identification Number and new address with Ford Motor Company Export Operations.

Ford Accessories for Your Vehicle

Ford has many fine products available from your dealer to clean your vehicle and protect its finishes. For best results, use the following, or products of equivalent quality:

Ford Custom Clear Coat Polish
Ford Custom Silicone Gloss Polish
Ford Custom Vinyl Protectant
Ford Deluxe Leather and Vinyl Cleaner
Ford Extra Strength Spot and Stain Remover
Ford Extra Strength Tar and Road Oil Remover
Ford Extra Strength Upholstery Cleaner
Ford Extra Strength Whitewall Tire Cleaner
Ford Multi-Purpose Cleaner
Ford Premium Car Wash Concentrate
Ford Triple Clean
Ford Ultra-Clear Spray Glass Cleaner

A wide selection of accessories is available through your local authorized dealer. These fine accessories have been engineered specifically to fulfill your automotive needs. They are custom designed to complement the style and aerodynamic appearance of your Ford-built vehicle. In addition, each accessory is made from high quality materials and meets or exceeds Ford's rigid engineering and safety specifications. That is why Ford brand accessories are warranted for up to 3 years or 36,000 miles (60,000 km), whichever comes first. See your dealer for complete warranty information and accessory availability.

Safety, Comfort, and Convenience

Comfort and Convenience

Air Conditioner
Engine Block Heater

Protection and Appearance Equipment

Bed Hooks
Bed Liner
Bed Mat
Bikini Hood Cover
Box Rails
Bumper Guards
Bumper, Rear Step
Bumper, Rear Tubular
Cargo Retention Net
Cleaners
Door Edge Guards
Floor Mats, Carpeted, Molded Vinyl
Front End Cover
Hood Deflector
Lubricants
Rally Bars
Running Boards
Super Seal Fabric Protector (U.S. only)
Super Seal Undercoating (U.S only)
Touch-Up Paints
Polishes
Side Window Deflector
Wheel Splash Guards (Flat)

Safety Equipment

Styled Wheel Protector
    Lug Nuts (Alum. Wheels only)
Vehicle Security System
Remote Keyless Entry
Tailgate Protector
Tailgate Lock

Travel Equipment

Heavy Duty Battery
Off Road Lights
Speed Control
Trailer Hitch, Class II

NOTE: When adding accessories, equipment, passengers, and luggage to your vehicle, do not exceed the total weight capacity of the vehicle or of the front or rear axle (GVWR, GAWR as shown on the Safety Compliance Certification Label). Consult your dealer for specific weight information.

NOTE: The Federal Communications Commission (FCC) or the Canadian Radio Telecommunications Commission (CRTC) regulates the use of mobile communications systems — such as two-way radios, telephones, and theft alarms — that are equipped with radio transmitters. Any such equipment installed in your vehicle should comply with FCC or CRTC regulations and should be installed only by a qualified technician.

NOTE: Mobile communications systems may harm the operation of your vehicle, particularly if they are not properly designed for automotive use or are not properly installed. For example, when operated, such systems may cause the engine to stumble or stall. In addition, such systems may themselves be damaged or their operation affected by operating your vehicle. (Citizens band [CB] transceivers, garage door openers, and other transmitters whose power output is 5 watts or less will not ordinarily affect your vehicle's operation.)

NOTE: Because we have no control over the installation, design, or manufacture of such systems, Ford cannot assume responsibility for any adverse effects or damage that may result if you use this equipment.

1996 Ranger Owner Manual Order Form

PUBLICATION FORM NO.	DESCRIPTION
FCS-12199-96	1996 Ranger Service Manual
FCS-12106-96	1996 Powertrain Control/Emission Diagnosis
FCS-12137-96	1996 Light Truck Service Specifications
FCS-12127-96	1996 Ranger Electrical & Vacuum Troubleshooting Manual
93-VID-OM	Ford and the American Dream (50) Minutes of Historic/Nostalgic Videotape

- **NOTE:** For publications prior to year shown above, write for availability to the address shown below.
- Please allow ample time for postal service delivery.

U.S. RESIDENTS

Make checks payable to: HELM, INCORPORATED

MAIL ORDER TO:

HELM, INCORPORATED
P.O. Box 07150
Detroit, Michigan 48207

OR ORDER TOLL FREE:

1-800-782-4356

Monday - Friday 8:00 A.M. - 6:00 P.M. EST, For Credit Card Holder Orders Only

CANADIAN RESIDENTS

Make cheques payable to: Ford Motor Company of Canada, Ltd.

MAIL ORDER TO:

Ford Motor Company of Canada, Ltd.
Service Publications
P.O. Box 1580, Station B
Mississauga, Ontario, Canada L4Y 4G3

OR ORDER TOLL FREE:

1-800-387-4966

Monday - Friday 8:30 A.M. - 6:00 P.M. EST, For Credit Card Holder Orders Only

U.S. RESIDENTS USE THIS PAGE

ORDER TOLL FREE 1-800-782-4356

NOTE: For Credit Card Holder Orders Only Monday-Friday 8:00 A.M.-6:00 P.M. EST

If further information is needed, write to the address shown below or call 1-800-782-4356. Material cannot be returned for credit without receiving advance authorization within 14 days of delivery. On returns, a re-stocking fee may be applied against the original order.

1996

PUBLICATION FORM NUMBER	1996 RANGER PUBLICATION	QTY.	PRICE EACH	TOTAL PRICE
FCS-12199-96	Ranger SM		$ 97.00	
FCS-12106-96	Powertrain Control/ED		160.00	
FCS-12137-96	Light Truck Service Spec.		32.00	
FCS-12127-96	Ranger EVTM		29.00	
93-VID-OM	Videotape		19.95	

TOTAL MATERIAL	
Michigan Purchasers add 6% sales tax	
Handling Charge	$4.00
GRAND TOTAL	

PAYMENT

☐ Check or Money Order payable to Helm, Inc. (USA funds only – do not send cash.)

☐ MasterCard

☐ VISA ☐ Discover

Expiration Date mo/yr. ☐☐ ☐☐

Account Number ☐☐☐☐ ☐☐☐☐ ☐☐☐☐ ☐☐☐☐

☐ Check here if billing address is different from shipping address shown.

(CUSTOMER SIGNATURE) (DATE)

SHIP TO

NOTE: Dealers and Companies please provide dealer or company name, along with the name of the person to whom the shipment should be sent. For purchases outside U.S.A. and Canada, please write to the following address for quotation. Mail completed order form to: HELM, INC • P.O. Box 07150 • Detroit, MI 48207. Please allow 6-8 weeks for delivery. Prices are subject to change without notice and without incurring obligation.

(CUSTOMER NAME) (ATTENTION)

(STREET ADDRESS - NO P.O. BOX NUMBERS) (APT.NO.)

(CITY) (STATE) (ZIP CODE)

DAYTIME TELEPHONE AREA CODE ( )

CANADIAN RESIDENTS USE THIS PAGE

ORDER TOLL FREE 1-800-387-4966

NOTE: For Credit Card Holder Orders Only Monday-Friday 8:30 A.M.-6:00 P.M. EST

If further information is needed, write to the address shown below or call 1-800-387-4966. Material cannot be returned for credit without receiving advance authorization within 14 days of delivery. On returns, a re-stocking fee may be applied against the original order.

1996

PUBLICATION FORM NUMBER	1996 RANGER PUBLICATION	QTY.	PRICE EACH	TOTAL PRICE
FCS-12199-96	Service Manual		$102.00	
FCS-12106-96	Powertrain Control/ED		160.00	
FCS-12137-96	Light Truck Service Spec.		39.00	
FCS-12127-96	Electrical & Vacuum T.M.		39.00	

TOTAL MATERIAL	
G.S.T. (7%)	
Handling/Shipping Charge Individual Item Order Except Service Manuals $5.00 OR Service Manuals and Multiple Item Orders $10.00 (French Owner Guide: No Charge)	
GRAND TOTAL	

PAYMENT

☐ Cheques or Money Order payable to Ford Motor Company of Canada, Ltd. (Do not send cash.)

☐ VISA

Expiration Date mo/yr: ☐☐ ☐☐

Account Number ☐☐☐☐ ☐☐☐☐ ☐☐☐☐ ☐☐☐☐

☐ Check here if billing address is different from shipping address shown.

(CUSTOMER SIGNATURE) (DATE)

SHIP TO

NOTE: Dealers and Companies please provide dealer or company name, along with the name of the person to whom the shipment should be sent. Mail completed order form to: Ford Motor Company of Canada, Ltd. • Service Publications • P.O. Box 1580, Station B Mississauga, Ontario, Canada L4Y 4G3. Please allow 6-8 weeks for delivery. Prices are subject to change without notice and without incurring obligation.

(CUSTOMER NAME) (ATTENTION)

(STREET ADDRESS - NO P.O. BOX NUMBERS) (APT.NO.)

(CITY) (PROVINCE) (POSTAL CODE)

DAYTIME TELEPHONE AREA CODE ( )

Service Made Easy

Ford has two goals for servicing your vehicle.

1. When we can, we design parts that do not need to be serviced.
2. We want to make servicing your vehicle as easy as possible. To help you:

- We highlight do-it-yourself items in yellow in the engine compartment so that you can find them easily.
- When possible, we design parts — such as the headlamp bulbs — that can be replaced without tools.
- We give you a Maintenance Schedule that makes tracking routine service for your vehicle easy. The maintenance schedule is located in the *Maintenance Schedule and Record* booklet.

This chapter tells you about the basic parts that you need to check and service regularly.

If your vehicle needs professional servicing, your dealership can provide the parts and service required. Check your *Warranty Information Booklet* to find out which parts and services are covered. Also see the *Customer Assistance* chapter of this Owner Guide.

Ford Motor Company recommends that the Owner Maintenance Checks listed in the *Maintenance Schedule and Record* booklet be performed for the proper operation of your vehicle. In addition to the conditions listed in the *Owner Maintenance Checklist*, be alert for any unusual noise, vibration, or other indication that your vehicle may need service. If you do notice something unusual, see that your vehicle is serviced promptly.

NOTE: Always dispose of used automotive fluids in a responsible manner. Follow your community's standards for disposing of these types of fluids. Call your local recycling center to find out about recycling automotive fluids.

Precautions When Servicing Your Vehicle

Be especially careful when inspecting or servicing your vehicle. Here are some general precautions for your safety:

- If you must work with the engine running, avoid wearing loose clothing or jewelry that could get caught in moving parts. Take appropriate precautions with long hair.
- Do not work on a vehicle in an enclosed space with the engine running, unless you are sure you have enough ventilation.
- Never get under a vehicle while it is supported only by a jack. If you must work under a vehicle, use safety stands.
- Keep all lit cigarettes and other smoking materials away from the battery and all fuel-related parts.

If you disconnect the battery, the engine must "relearn" its idle conditions before your vehicle will drive properly. To find out how the engine does this, see *Battery* in this chapter.

Working with the engine off:

1. Set the parking brake fully and make sure that the gearshift is securely latched in P (Park).

   When the transfer case is in the N (Neutral) position, the engine and transmission are disconnected from the rest of the driveline. Therefore, the vehicle is free to roll even if the automatic transmission is in P (Park) or the manual transmission is in gear. Do not leave the vehicle unattended with the transfer case in the N (Neutral) position.

2. Remove the key from the ignition after you turn the engine off.
3. Block the wheels. This will prevent your vehicle from moving unexpectedly.

Working with the engine on:

1. Set the parking brake fully, and make sure the gearshift is securely latched in P (Park) (automatic transmission) or Neutral (manual transmission) and block the wheels.

   When the transfer case is in the N (Neutral) position, the engine and transmission are disconnected from the rest of the driveline. Therefore, the vehicle is free to roll even if the automatic transmission is in P (Park) or the manual transmission is in gear. Do not leave the vehicle unattended with the transfer case in the N (Neutral) position.

2. Block the wheels. This will prevent your vehicle from moving unexpectedly.

⚠WARNING
Do not start your engine with the air cleaner removed and do not remove it while the engine is running.

Opening the Hood

1. Pull the hood release handle, located below the steering column.

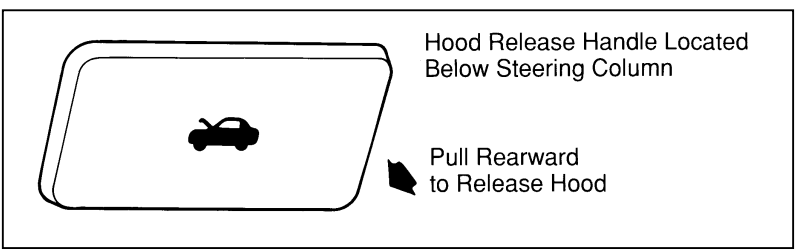

Hood release handle

2. While applying upward pressure on the hood, lift the hood latch handle located in the opening between the hood and upper portion of the grille near the center, to your left, as you face the front of the vehicle.

3. Disconnect the hood support from the retaining clip on the radiator support and place it into the slot marked PROP in the underside of the hood.

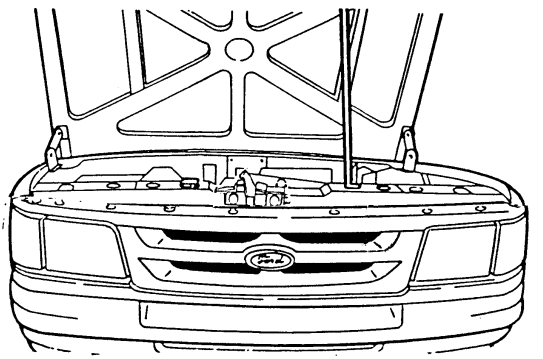

While applying upward pressure on the hood, lift the auxiliary latch release handle and raise the hood. Insert support rod in hood prop hole. To close, raise hood slightly and remove support rod from the prop hole. Slam hood shut. After closing, always make sure your hood is latched securely by trying to lift it.

Hood and support

NOTE: Read and understand *Precautions When Servicing Your Vehicle* at the beginning of this chapter before opening the hood.

To close the hood, raise it so that the support rod comes away from the slotted hole in the hood. Place the support rod in its retaining clip and close the hood with enough force to make it latch. Be sure to oil the hood latch every six months to maintain smooth operation.

Always attempt to lift the hood after closing to be sure it is securely latched.

Engine Compartment

Your vehicle has one of the following types of engines:

- A 2.3 Liter EFI, I-4 twin plug engine, or
- A 3.0 Liter SEFI, V-6 engine or
- A 4.0 Liter SEFI, V-6 engine.

The following pages show diagrams of each engine type and where to find items that you should regularly service.

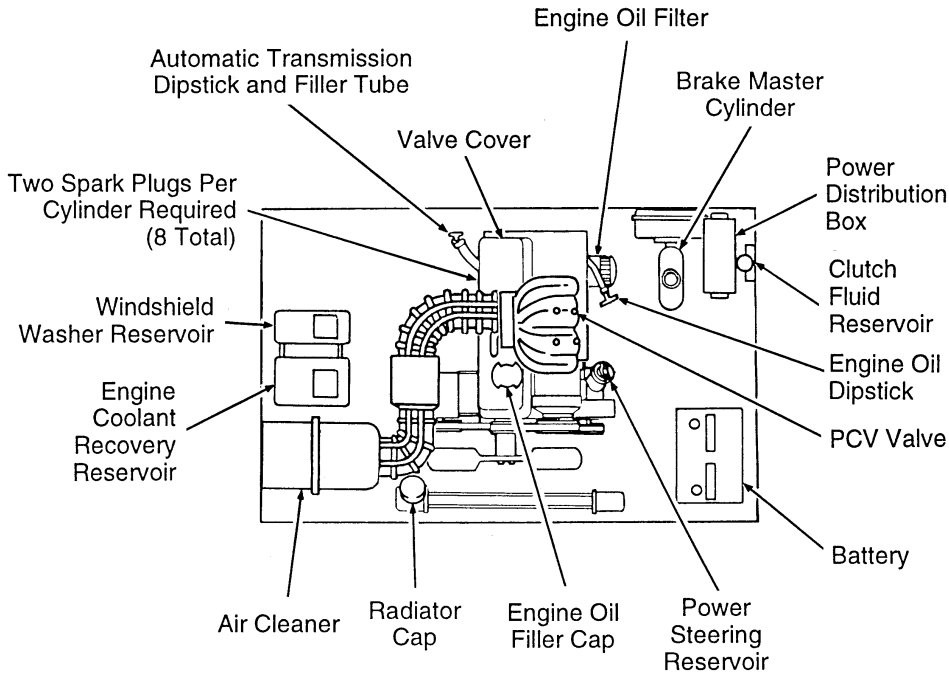

2.3L engine compartment service points

3.0L engine compartment service points

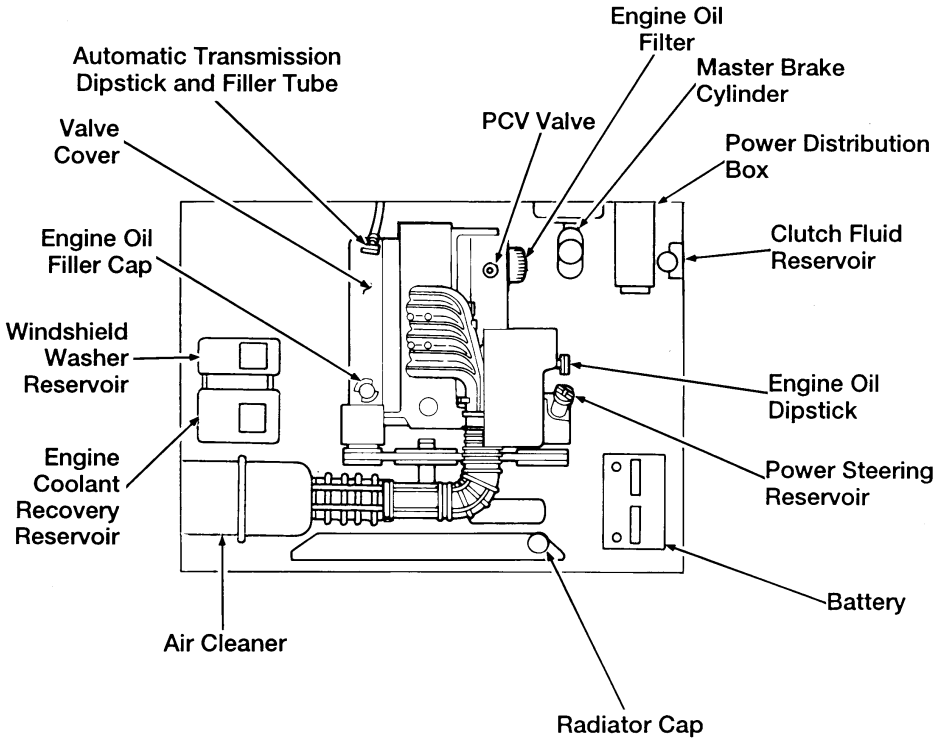

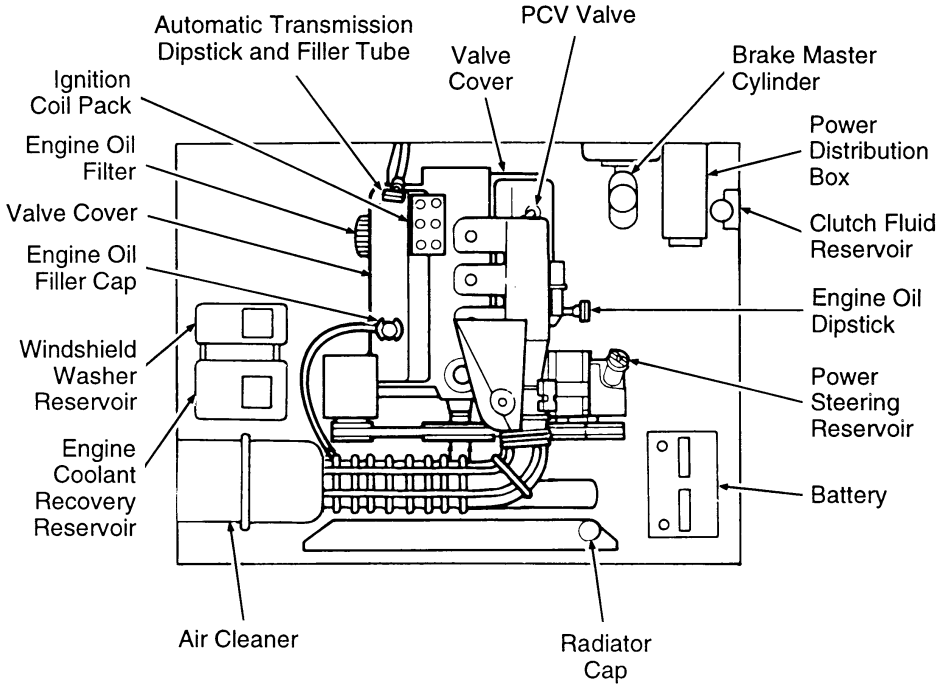

4.0L engine compartment service points

Cleaning the Engine

A clean engine is more efficient because a buildup of grease and dirt acts as an insulator, keeping the engine warmer than usual.

- Extreme care must be used if a power washer is used to clean the engine. The high pressure fluid could penetrate sealed parts and assemblies causing damage or malfunctions.
- In order to avoid possible cracking of the engine block or fuel injection pump, do not spray a hot engine or injection pump with cold water.
- The alternator, coils and air intake must be covered. Covering these components will help prevent water damage.
- Never wash or rinse the engine while it is running. Water getting into the engine may cause internal damage.

Filling the Fuel Tank

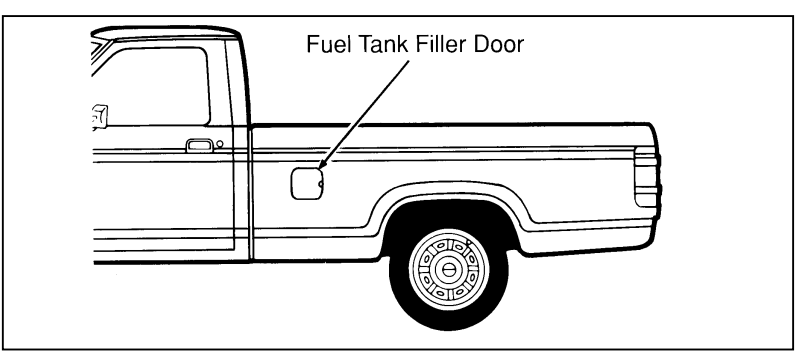

Fuel filler door

Opening the Fuel Filler Door

To open the fuel filler door of your vehicle, just insert your finger in the divot and pull the door open all the way.

Filling the fuel tank

⚠WARNING
Do not overfill the fuel tank. The pressure in an overfilled tank may cause leakage and lead to fuel spray and fire.

To fill the fuel tank properly:

NOTE: Extinguish all lit cigarettes, other smoking materials, and any open flames before fueling your vehicle.

1. Unscrew the fuel cap by exerting pressure on the plastic lock bar and rotating the fuel cap counterclockwise.
2. Turn the fuel cap 1/2 to 3/4 of a turn until a hissing sound is heard. Wait until the hissing sound stops and then continue rotating counterclockwise to remove the fuel cap.

Make sure that you follow the above fuel cap removal instructions and use caution. Such caution will minimize the possibility of fuel spraying during removal of the fuel cap.

3. Make sure that you pump unleaded fuel and put the nozzle all the way inside the fuel filler pipe.

If you spill any fuel on the body of your vehicle, clean it off immediately. The fuel may dull or soften the paint if you do not wash it off.

To replace and secure the fuel cap; place it in position and rotate it clockwise until it clicks (ratchets). Doing so will not damage or break the fuel cap. The ratcheting mechanism allows the fuel cap to be sealed without overtightening.

If you lose the fuel cap, replace it with an authorized Motorcraft or equivalent part.

⚠WARNING

If you do not use the proper fuel cap, the pressure in the fuel tank can damage the fuel system or cause it to work improperly in a collision.

NOTE: If you replace your fuel cap with an aftermarket fuel filler cap, the customer warranty may be void for any damage to the fuel tank and/or fuel system.

⚠WARNING

If the fuel cap is venting vapor or if you hear a hissing sound, wait until it stops before completely removing the cap.

You may occasionally hear and/or feel a slight thump occurring one or two seconds after a gentle stop. This is normal and generally occurs with the fuel tank 3/4 full. It is caused by the wave action of the fuel within the tank.

A venting fuel tank is not an abnormal condition. It may be caused by:

- Too volatile a fuel for the weather conditions. The service stations sometimes sell winter grade fuel in the spring.
- Pulling a heavy load on hot days, or at high altitudes.
- Extended periods of idling with the engine RPM increased above the normal idle range.
- Parking vehicle in full sunlight for extended periods on extremely hot days.

Choosing the Right Fuel

Use only UNLEADED FUEL in your vehicle. Using leaded fuel is prohibited by federal law. Your warranty may not apply if your vehicle is damaged because you used the wrong fuel.

Vehicle inspection programs may detect misfueling. Under these circumstances, you may be required by law to make costly repairs at your own expense.

Octane Recommendations

Your vehicle is designed to use regular fuel with an octane rating of 87. In most cases it is not necessary to use a fuel with an octane rating higher than 87. At service stations, the octane rating is displayed in a label on the pumps.

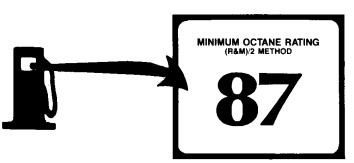

Typical octane rating label

In some parts of the country, “regular” grade fuels are sold with octane ratings of 86 or even less, especially in high altitude areas. We recommend that you do not use these fuels. Always use a fuel with an octane rating of 87, even if it is sold as a “midgrade” or “premium.”

Do not be concerned if your vehicle sometimes knocks lightly when you drive up a hill or when you accelerate. However, if a fuel with the recommended octane rating knocks heavily under all driving conditions or knocks lightly driving at cruising speed on level roads, see your dealer or a qualified service technician. Persistent, heavy knocking can damage the engine.

In some parts of the country, “premium” grade fuels are sold with octane ratings of less than 91, especially in high altitude areas. It is recommended that you use only those “premium” fuels with an octane rating of 91 or higher.

Fuel Quality

If you are experiencing starting, rough idle or hesitation problems when the engine is cold, it may be caused by fuel with low volatility. Try a different brand of fuel. If the condition persists, see your dealer or a qualified service technician.

Using a high-quality fuel makes your vehicle more responsive and maintains its good fuel economy and emissions by:

- minimizing deposits in fuel injectors, combustion chambers and on intake valves.
- assuring quick starting and smooth warm-up.
- protecting the fuel system from vapor lock in very hot weather, which causes the engine to hesitate or stall and makes restarts difficult.
- protecting your fuel system from rusting.
- preventing the fuel lines from freezing.
- preventing the fuel system from “gumming up” when your vehicle is not used for long periods of time.

It should not be necessary to add any aftermarket products to your fuel tank if you continue to use a high-quality fuel.

Gasolines For Clean Air

Fuels in certain areas of the country are required to contain oxygenates to improve air quality. Common oxygenates are ethanol or grain alcohol (blended at no more than 10%), methanol or wood alcohol (blended at no more than 5% with cosolvents and additives) and MTBE or methyl tertiary butyl ether (blended at no more than 15%).

Reformulated gasoline is also required in certain areas of the U.S. These fuels are designed to further reduce emissions from your vehicle.

Generally, you should not experience difficulties operating your vehicle on reformulated gasoline or on fuels containing oxygenates. We encourage you to use these fuels.

Safety Information Relating to Automotive Fuels

⚠WARNING
Automotive fuels can cause serious injury or death if misused or mishandled.

Gasoline and other automotive fuels are extremely flammable. Turn your vehicle off and do not smoke while refueling your vehicle. Keep sparks and other sources of ignition away from fuels.

Automotive fuels can be harmful or fatal if swallowed. Further, gasoline may be blended with methanol. Even small amounts of methanol can cause blindness and possibly death when swallowed. Therefore, never attempt to siphon any fuel by mouth.

If any fuel is swallowed, call a physician or poison control center immediately. **Do not delay calling a physician merely because no adverse effects are noticed at first; the toxic effects of fuels may not become apparent for many hours.**

If gasoline is swallowed, do not induce vomiting. If a gasoline-methanol blend is swallowed, induce vomiting under the direction of a physician or poison control center.

Gasoline and gasoline-methanol blends may contain small amounts of carcinogens, such as benzene. Long-term exposure to unleaded gasoline vapors has caused cancer in laboratory animals. Further, excessive inhalation of fuel vapors can cause headache, dizziness, nausea, loss of coordination, and other symptoms which could interfere with your ability to safely operate your vehicle. To the extent possible, avoid breathing vapors while refueling. If fuel vapors are inhaled in excessive quantities, move the victim to fresh air and seek medical attention.

Fuels can also be harmful if absorbed through the skin. When refueling, be careful not to splash fuel on yourself or your clothing. If fuel is splashed on the skin, promptly remove contaminated clothing and wash the skin thoroughly with soap and water.

Fuels can cause severe eye irritation and possibly eye damage. If fuel is splashed in the eyes, remove contact lenses (if worn), flush with large amounts of water for 15 minutes, and seek medical attention.

If you are taking the medication “Antabuse” or other forms of disulfiram for the treatment of alcoholism, vapor or skin contact with a gasoline-methanol blend may cause the same kind of adverse reaction as drinking an alcoholic beverage. In sensitive individuals, serious personal injury or sickness could result. Consult a physician promptly if you experience an adverse reaction.

Running Out of Fuel

If your vehicle runs out of fuel, try to stop on level ground away from traffic. Add at least two gallons (8 liters) of fuel to start your vehicle again. If your vehicle is not on level ground, you may need as much as five gallons (20 liters) of fuel to start it.

You may need to crank the engine several times before the fuel system starts to pump fuel from the tank to the engine.

Fuel Economy

Fuel economy is an estimate of the efficiency of your vehicle and can be calculated as Miles Per Gallon (MPG) or Liters Per 100 Kilometers (L/100K).

To calculate fuel economy:

1. Fill the tank completely and record the initial odometer reading.
2. Every time you buy fuel record the amount (in gallons or liters) purchased.
3. After at least three to five tankfuls, fill the fuel tank and record the final odometer reading.
4. Divide the total number of miles that you have driven by the total number of gallons that your vehicle has used. In metric, multiply the number of liters used by 100 and divide the answer by the number of kilometers traveled. This will give you the number of liters used per 100 km.

Comparisons With Environmental Protection Agency (EPA) and Transport Canada (TC) Fuel Economy Estimates

EPA fuel economy figures are obtained from laboratory tests under simulated road conditions and may not reflect the actual conditions you experience or your style of driving. The EPA fuel economy estimate is not a guarantee that you will achieve the fuel economy shown.

Improving Fuel Economy

Fuel economy is affected by a number of variables which can reduce efficiency. You can improve fuel economy by understanding these variables and minimizing their effect.

The following decrease fuel economy:

- Lack of regular, scheduled maintenance
- Excessive speed
- Rapid acceleration and excessive speed
- Driving with your foot on the brake
- Sudden stops
- Extended engine idling
- Using speed control in hilly terrain
- Extended use of the A/C, defroster, rear window defroster and other accessories
- Underinflated tires
- Heavy loads
- Aftermarket add-ons such as bike, ski or luggage racks, bug deflectors, etc.

Engine Oil Recommendations

We recommend using Motorcraft oil or an equivalent oil meeting Ford Specification WSS-M2C153-F and displaying the American Petroleum Institute CERTIFICATION MARK on the front of the container.

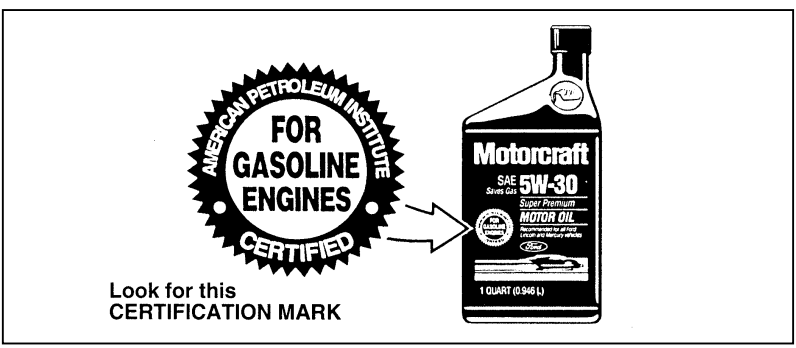

The API Certification Mark

Never use:

- "Non-Detergent" oils
- Oils labeled API SA, SB, SC, SD, SE, SF or SG
- Additional engine oil additives, oil treatments or engine treatments

Engine oils with an **SAE 5W-30** viscosity are **PREFERRED** for your vehicle. They provide the best engine performance, fuel economy and engine protection for all climates down to -15˚F (-25˚C).

Synthetic engine oils which are CERTIFIED and of the preferred viscosity may be used in your engine. The engine oil and oil filter must still be changed according to the maintenance schedule.

Checking and Adding Engine Oil

Since the proper amount of engine oil is important for safe engine operation, check the oil using the dipstick each time you put fuel in your vehicle. Remember the engine must be off, the oil must be warm and the vehicle must be parked on level ground.

Checking the engine oil level:

1. Turn the engine off after it has warmed up and allow a few minutes for the engine oil to drain back into the oil pan.
2. Set the parking brake, making sure the gearshift is securely latched in P (Park) or 1 (manual transmission).
3. Open the hood. Protect yourself from engine heat.
4. Locate the engine oil dipstick (highlighted in yellow) and carefully pull it out of the engine.
5. Wipe the dipstick clean and put it back into position, making sure it is fully seated.

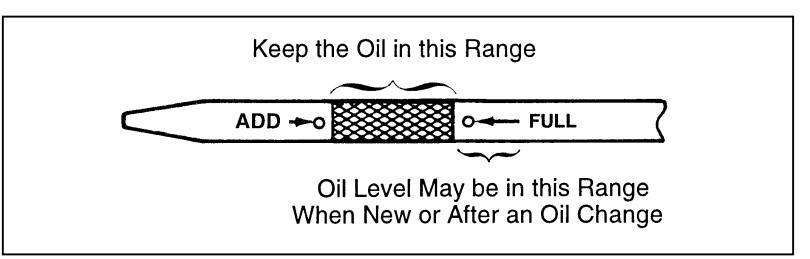

Engine oil dipstick

6. Carefully, pull the dipstick out again. If the oil level is below the “ADD” line, add engine oil as necessary. If the oil level is beyond the letter “F” in Full, engine damage or high oil consumption may occur and some oil must be removed from the engine.
7. Put the dipstick back in and make sure it is fully seated.

It may be necessary to add some oil between oil changes. Make sure you use a CERTIFIED engine oil of the preferred viscosity. Your vehicle's warranty coverage may not apply if engine damage is caused by the use of improper engine oil.

Add engine oil through the oil filler cap highlighted in yellow. To add oil, remove the filler cap and use a funnel to pour oil into the opening. Be careful not to overfill the engine. Recheck the oil level after you finish adding oil.

Changing the Engine Oil and the Oil Filter

Change the engine oil and oil filter per the following, whichever occurs first:

5,000 MILES (8,000 KM) OR 6 MONTHS
NORMAL SCHEDULE

3,000 MILES (5,000 KM) OR 3 MONTHS
SPECIAL CONDITIONS
SEVERE DUTY SCHEDULE

EXTENSIVE IDLING
TRAILER TOWING
DRIVING IN SEVERE DUST
POLICE, TAXI, OR DELIVERY

Refer to the Maintenance Schedule and Record Booklet for additional information.

NOTE: See *Refill Capacities, Motorcraft Parts and Lubrication Specifications* in this chapter for the appropriate oil filter and engine oil refill quantity.

NOTE: Always dispose of used automotive fluids in a responsible manner. Follow your community's standards for disposing of these types of fluids. Call your local recycling center to find out about recycling automotive fluids.

⚠WARNING
Continuous contact with USED motor oil has caused cancer in laboratory mice.

Protect your skin by washing with soap and water.

Engine Coolant

Checking the engine coolant

NOTE: Be sure to read and understand *Precautions When Servicing Your Vehicle* at the beginning of this chapter.

Your vehicle's engine coolant protects the engine from overheating in the summer and from freezing in the winter. Check the level of the engine coolant at least once a month, but preferably each time you stop for fuel. Simply look at the engine coolant recovery reservoir located in the engine compartment. To locate this reservoir, see the diagram of your vehicle's engine under *Engine types* in this chapter.

If the engine coolant has not been checked for a long period of time the engine coolant reservoir may eventually empty. If the engine coolant reservoir empties, check the engine coolant level in the radiator. Read the following warnings before removing the radiator cap. If it is necessary to fill the radiator, refer to the *Engine Coolant Refill Procedure* in this chapter for instructions.

⚠WARNING

Never remove the coolant recovery cap while the engine is running or hot.

1. Before you remove the radiator cap, turn the engine off and let it cool. Even when the engine is cool, be careful when you remove the radiator cap.
2. When the engine is cool, wrap a thick cloth around the cap and turn it slowly counterclockwise to the first stop.
3. Step back while the pressure releases.
4. When you are sure that all the pressure has been released, use the cloth to turn and remove cap.
5. Stand away from the radiator opening. Hot steam may blow out or hot engine coolant may even splash out.

Adding engine coolant

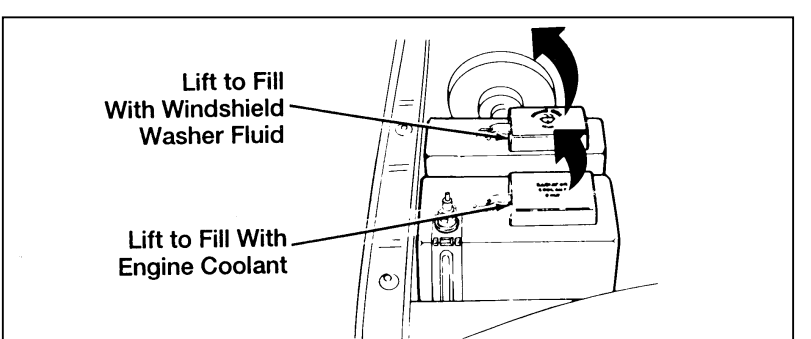

Adding engine coolant

⚠WARNING

Be careful not to add engine coolant to the windshield washer fluid reservoir. If sprayed on the windshield, engine coolant could make it difficult to see through the windshield.

When the engine is cool, add a 50/50 mixture of engine coolant and water to the engine coolant recovery reservoir — DO NOT ADD DIRECTLY TO THE RADIATOR. Add straight water only in an emergency, but you should replace it with a 50/50 mixture of coolant and distilled water as soon as possible.

Check the coolant level in the coolant recovery reservoir the next few times you drive the vehicle. If necessary, add enough of a 50/50 mixture of coolant and water to bring the liquid level to the fill line on the reservoir.

⚠WARNING

Never remove the coolant recovery cap while the engine is running or hot.

If you must remove the coolant recovery cap, follow these steps to avoid personal injury caused by escaping steam or engine coolant:

1. Before you remove the cap, turn the engine off and let it cool.
2. When the engine is cool, wrap a thick cloth around the cap and turn it slowly, counterclockwise to the first stop.
3. Step back while the pressure releases.
4. When you are sure that all the pressure has been released, use the cloth to press the cap down, turn it counterclockwise, and remove it.

Use Ford Premium Engine Coolant E2FZ-19549-AA (in Canada, Motorcraft CXC-8-B) or an equivalent premium engine coolant that meets Ford specification ESE-M97B44-A. Ford Premium Engine Coolant is an optimized formula that will protect all metals and rubber elastomers used in Ford cooling systems for 4 years or 50,000 miles (80,000 km).

Do not use alcohol or methanol antifreeze or any engine coolants mixed with alcohol or methanol antifreeze. Do not use supplemental coolant additives in your vehicle. These additives may harm your engine cooling system. The use of an improper coolant may void the warranty of your vehicle's engine cooling system.

Recycled engine coolant

Ford Motor Company recommends that Ford and Lincoln-Mercury dealers use recycled engine coolant produced by Ford-approved processes. Not all coolant recycling processes produce coolant which meets Ford specification ESE-M97B44-A, and use of such coolant may harm engine and cooling system components.

Always dispose of used automotive fluids in a responsible manner. Follow your community's regulations and standards for recycling and disposing of automotive fluids.

Coolant refill capacity

To find out how much fluid your vehicle's cooling system can hold, see *Refill capacities for fluids* in the Index.

Have your dealer check the engine cooling system for leaks if you have to add more than a quart (liter) of engine coolant per month.

Severe winter climate

If you drive in extremely cold climates (less than -34˚F [-36˚C]), it may be necessary to increase the coolant concentration above 50%. Refer to the chart on the coolant container to ensure the coolant concentration in your vehicle is such that the coolant will not freeze at the temperature level in which you drive during winter months. Never increase the engine coolant concentration above 60%. Leave a 50/50 mixture of engine coolant and water in your vehicle year-round in non-extreme climates.

Checking Hoses

Inspect all engine and heater system hoses for deterioration, leaks and loose clamps before adding or replacing engine coolant. Make whatever repairs or replacements that are necessary using Motorcraft parts or their equivalents.

Engine Coolant Drain and Flush

To drain your vehicle's engine coolant:

1. Turn off the engine and let it cool. Fully depressurize the engine cooling system by covering the radiator cap with a thick cloth and turning it slowly counterclockwise to the first stop. Step back while the pressure releases.
2. Remove the cap.
3. Attach a small hose to the drain tube at the bottom of the radiator.
4. Let the engine coolant drain into a suitable container. Disconnect the lower radiator hose at the radiator connector and drain any remaining engine coolant into a container.

Proper procedures for flushing the cooling system can be found in the *Service Manual.*

Engine coolant refill procedure

After you have drained the engine cooling system:

1. When cold, fill the radiator to a level 1 to 1 1/2 inches (38 mm) below the filler neck seat.
2. Replace the radiator cap to its fully installed position, then back off to the first stop. This will prevent high pressure from building up in the cooling system during this part of the fill procedure.
3. Start and idle the engine until the thermostat opens and the radiator upper hose becomes warm.
4. Shut off the engine and allow the engine to cool. Cover the radiator cap with a thick cloth and cautiously remove it. Step back while the pressure releases.
5. Finally, check the radiator and add more engine coolant if needed, following the procedures noted above. Reinstall the radiator cap securely, when finished.
6. If more engine coolant is necessary, fill the overflow reservoir to the appropriate level marked on the bottle.

Windshield Washer Fluid and Wipers

Washer Fluid

Check the level of the windshield washer fluid every time you stop for fuel. The reservoir for washer fluid is located on the passenger's side of the engine compartment. Visual inspection can determine if the washer fluid is adequate. Do not operate the washer when the reservoir is empty.

⚠WARNING
Do not put windshield washer fluid in the container for the engine coolant.

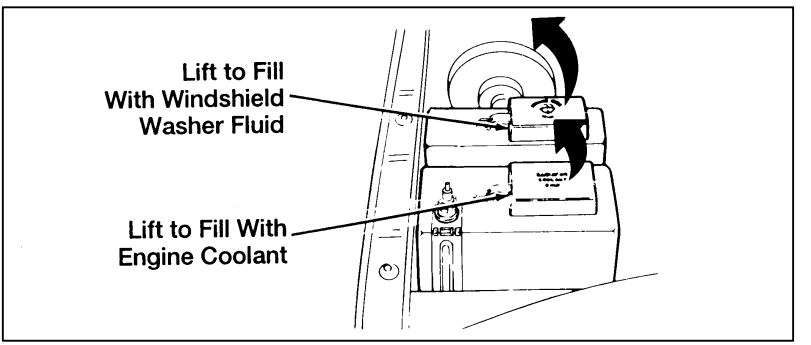

Adding windshield washer fluid

Use specially formulated windshield washer fluid rather than plain water, because specially formulated washer fluids contain additives that dissolve road grime. For safety reasons, washer fluids containing an appropriate antifreeze such as methanol should be used in freezing weather (temperatures below 32˚F [0˚C]). State or local regulations on Volatile Organic Compounds (VOC's) may restrict use of the most common antifreeze, methanol. Washer fluids containing non-methanol antifreeze agents should be used only if they provide cold weather protection without damaging the vehicle's paint finish, wiper blades, and windshield washer system.

If you choose to use a windshield washing solution that must be mixed, follow the manufacturer's mixing instructions. Improperly mixed solutions may freeze unexpectedly.

⚠WARNING

Windshield washer fluid contains methanol and it is poisonous. Follow all instructions on the bottle of washer fluid.

Wiper Blades

Check the windshield wiper blades at least twice a year. Also check them whenever they seem less effective than usual. Such substances as tree sap and some hot wax treatments used by commercial car washes reduce the effectiveness of wiper blades.

If the blades do not wipe properly, clean both the windshield and the wiper blades. Use undiluted windshield washer solution or a mild detergent. Rinse thoroughly with clear water. Do not use fuel, kerosene, paint thinner, or other solvents to clean your wiper blades. These will damage your blades.

To make reaching the wiper blades easy, simply turn the ignition to the ACC position and turn your wipers on. Wait for them to reach a vertical position and turn the ignition to the OFF position. Do not move the wipers manually. Manually moving the wipers across the windshield may damage them.

Wiper blade replacement

If the wipers still do not work properly after you clean them, you may need to replace the wiper blade assembly or the blade. When replacing the wiper blade assembly, blade refill, or wiper arm always use a Motorcraft part or equivalent.

To replace the wiper blades:

1. Cycle windshield wiper arm and wiper blade to where removal of blade can be performed without difficulty. Turn ignition off at desired position.
2. To remove wiper blade assembly from wiper mounting arm, depress lock tab and push wiper mounting arm away from wiper blade assembly.
3. To install wiper blade assembly, pull wiper mounting arm down on wiper blade until lock tab is engaged.

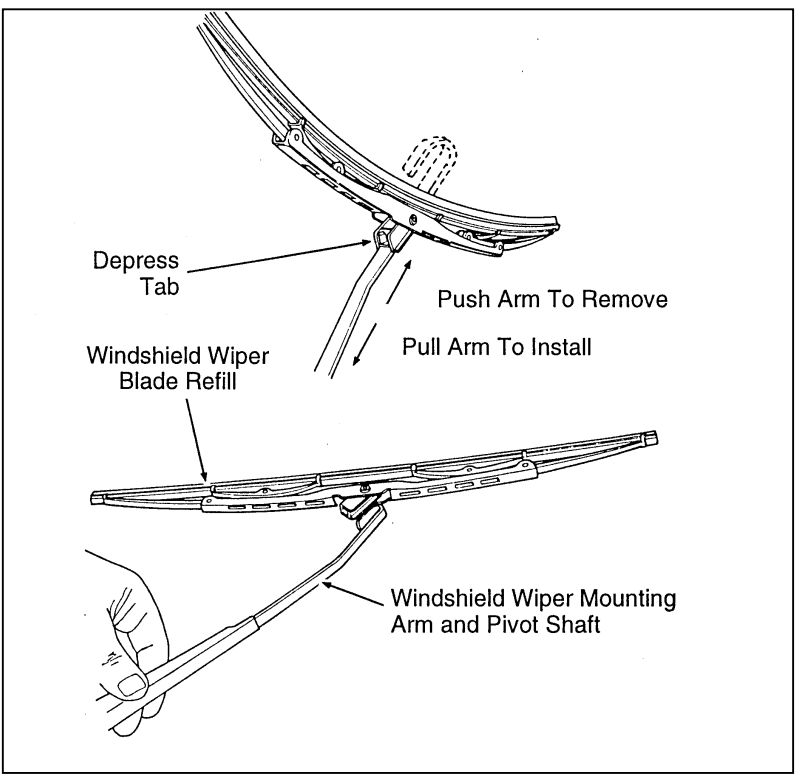

Replacing the wiper blades

Tires

Look at your tires each time you fill your fuel tank. If one tire looks lower than the others, check the pressure in all of them. Always follow these precautions:

- Keep your tires inflated to the recommended pressures.
- Stay within the recommended load limits (see *Load limits* in the Index).
- Make sure the weight of your load is evenly distributed.
- Drive at safe speeds.

If you do not take these precautions, your tires may fail or go flat.

Ford Motor Company recommends obeying posted speed limits.

⚠WARNING

Driving too fast for conditions creates the possibility of loss of vehicle control. Driving at very high speeds for extended periods of time may result in damage to vehicle components.

At least once a month, check the pressure in all your vehicle's tires, including the spare. Use an accurate tire pressure gauge. Check the tire pressure when tires are cold, that is, after the vehicle has been parked for at least one hour or has been driven less than 3 miles (5 km). You can find the proper cold pressure on the Safety Compliance Certification Label.

⚠WARNING

Improperly inflated tires can affect vehicle handling and can fail suddenly, possibly resulting in loss of vehicle control.

Tire inspection and maintenance

Inspect the tire treads, and remove stones, nails, glass or other objects that may be wedged in the tread grooves. Check for holes or cuts that may permit air to leak from the tire, and make the necessary repairs.

Inspect the tire side walls for cuts, bruises and other damage. If you suspect internal damage to the tire, have it demounted and checked. You may need to repair or replace it.

Wheel inspection and maintenance

Check for damage that would affect the runout of the wheels. Wobble or shimmy will eventually damage the wheel bearings.

Front wheel bearings require periodic repacking and adjustment as specified in the *Maintenance Schedule and Record* booklet. Loose or worn front wheel bearings tend to let the vehicle wander or shimmy, and can eventually cause excessive tire wear.

Whenever a wheel is removed and then re-installed, always remove any corrosion that may be present on the mounting surface of the wheel and/or the surface of the hub, drum or rotor that contacts the wheel.

⚠WARNING
Installing wheels without a good metal-to-metal contact at the wheel mounting surface can cause the wheel lug nuts to loosen and could allow the wheel to come off while the vehicle is in motion.

Traction-Lok Rear Axle (If equipped)

This axle provides added drive away traction on slippery surfaces, particularly when one or more wheels are on a surface with poor traction.

⚠WARNING
To avoid injury, never run the engine with one wheel off the ground, such as when changing a tire.

Tire Rotation

Because your vehicle's front and rear tires perform different jobs, they often wear differently. To make sure your tires wear evenly and last longer, rotate them at the mileage shown in the *Maintenance Schedule and Record* booklet which came with your vehicle.

Rotate the tires according to the following diagram. If you notice that the tires wear unevenly, have them checked. If your light truck has a temporary spare tire, do not include it in the tire rotation pattern.

In situations where the tires differ from front to rear (snow/traction), simply rotate using a side to side pattern.

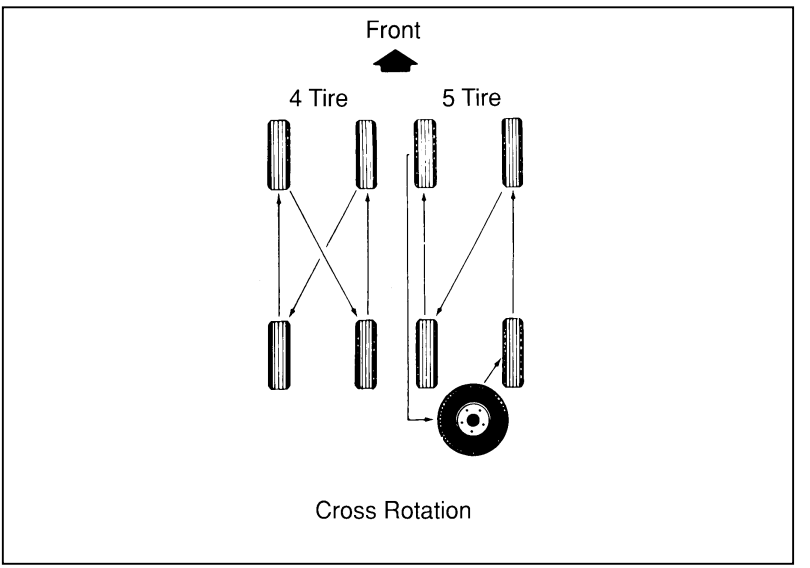

Tire rotation pattern

After each rotation, adjust individual tire pressure as specified on the Safety Compliance Certification Label. Tighten wheel lug nuts to the required torque specification and retighten again after 500 miles (800 km).

If your vehicle has aluminum wheels, you may demount the full size, non-temporary spare tire (if so equipped) and remount on an aluminum wheel to rotate the spare tire into your vehicle's rotation pattern. Rebalance the wheel.

Replacing the Tires

Replace any tires that show wear bands. When your tire shows a wear band, it has only 1/16 inch (2 mm) of tread left.

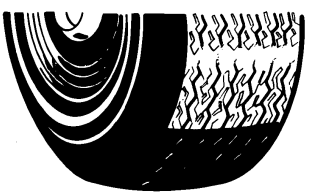

A worn-out tire

Because your vehicle's tires may wear unevenly, you may need to replace them before a wear band appears across the entire tread. Some spots wear more heavily than others.

Your wheels and tires are match-mounted for improved ride. Before you begin to repair a tire, mark the wheel and tire so that they are properly aligned when remounted. This will ensure that the tires will continue to give you the same ride level.

⚠WARNING

When replacing full size tires, never mix radial, bias-belted, or bias-type tires. Use only the tire sizes that are listed on the tire pressure decal. Make sure that all tires are the same size, speed rating, and load-carrying capacity. Use only the tire combinations recommended on the decal. If you do not follow these precautions, your vehicle may not drive properly and safely.

⚠WARNING

Make sure that all replacement tires are of the same size, type, load-carrying capacity, and tread design (e.g. “All Terrain”, etc.), as originally offered by Ford.

⚠WARNING

Do not replace your 4x2 tires with “high performance” tires, or larger size tires than approved for your vehicle by Ford.

Ranger 4x4 P235/265 Tire and Wheel Usage

⚠WARNING

Do not use P235/75R15 “All Season” tires. For Ranger 4x4 Regular Cab vehicles, P235/75R15 “All Terrain” tires are acceptable only on 15x7 inch wheels.

⚠WARNING

Do not use P265/75R15SL tires on the Ranger 4x4 108 inch wheelbase. The P265/75R15SL “All Terrain” tires are acceptable only on the 114 inch and 125 inch wheelbase Ranger 4x4 models, and only with 15x7 inch wheels.

Tire Size	Acceptable	Unacceptable
P235/75R15SL	"All Terrain" Tire with 15x7 wheel only	"All Season" Tire
P265/75R15SL	On 114 & 125 inch wheelbase models with 15x7 wheel only	On 108 inch wheelbase model

⚠WARNING

Failure to follow these precautions may adversely affect the handling of the vehicle and make it easier to lose control and roll over.

Tires that are larger or smaller than your vehicle's original tires may also affect the accuracy of your speedometer.

Please note that the size in the following chart is typical. To determine what specific size tire and rim is recommended by Ford for use on your vehicle, refer to the Safety Compliance Certification Label on your vehicle.

Tire Size Designation

P215/75 R15

- Identifies Passenger Car Tire
- Nominal Section Width in Millimeters
- Height-to-Width Ratio of Tire
- Identifies Tire Construction: R — Radial, B — Bias belted, D — Diagonal
- Rim Diameter in Inches

Tire identification chart

⚠WARNING

Use of aftermarket wheel assemblies may damage your vehicle or cause accidents resulting in serious injuries.

Wheel and Tire Matching

See an authorized tire dealer for proper servicing procedures. Wheels and tires must be properly removed, matched and remounted to maintain the best possible ride.

Snow Tires and Chains

The tires on your vehicle have all-weather treads that provide traction in rain or snow. However, during the winter months in some climates, you may need to use snow tires and occasionally chains for your tires.

⚠WARNING

Snow tires must be the same size and grade as the tires you currently have on your vehicle.

Do not use chains when using a temporary spare. For full size tires, use chains on the tires only in an emergency or if the law requires them where you live. When you use the tire chains:

- Make sure the chains are the right size for your tires. Use only SAE Class “S” chains. Other types may damage your vehicle.
- Tire chains may scratch or chip aluminum wheels. IT IS RECOMMENDED THAT TIRE CHAINS ARE INSTALLED ON STEEL WHEELS ONLY. Be sure to remove wheel covers (if equipped) from steel rims before using tire chains to avoid scratches or damage.
- Install tire chains on rear tires; use of chains on front tires is not recommended.
- Local regulations may prohibit or restrict the use of tire chains. Investigate the laws and regulations in your area before installing chains.

- Put the chains on tightly with the ends held down securely. Verify that no chain touches any wiring, brake lines, or fuel lines. Follow the chain manufacturer's instructions.
- Drive slowly. If you can hear the chains rub or bang against your vehicle, stop the vehicle and tighten the chains. If you continue to hear the chains rub or bang against your vehicle, remove the chains to prevent damage to your vehicle.
- Avoid fully loading your vehicle if possible.
- Tire chains may affect vehicle handling. Drive carefully and avoid hard braking.

Remove tire chains at the first opportunity after using them on snow and ice. Do not use the chains on dry roads.

- Make sure your suspension insulation and bumpers are not missing or worn to avoid damage to your vehicle.

Cleaning the Wheels

Wash the wheels with the same detergent you use to wash your vehicle's body. Do not use acid-based wheel cleaners, steel wool, abrasives, fuel, or strong detergents. These substances will damage protective coatings. Use tar and road oil remover to remove grease and tar.

NOTE: Before going to a car wash, find out if the brushes are abrasive.

If you have raised white letter tires that are difficult to clean with regular detergent, use whitewall tire cleaner. Follow the directions on the container and rinse the tires with plenty of clean water.

Battery

Your vehicle may have a Motorcraft maintenance-free battery. The Motorcraft maintenance-free battery does not require additional water during its life of service. The vents are part of the cover and cannot be removed. For longer, trouble-free operation, keep the top of the battery clean and dry. Also, make certain the battery cables are tightly fastened to the battery terminals.

If you see any corrosion on the battery cables or terminals, remove the cables from the terminal and clean them both with a wire brush. You can neutralize the acid with a solution of baking soda and water. Reinstall the cables when you are done cleaning them, and apply a small quantity of grease to the top of each battery terminal to help prevent corrosion.

Battery replacement

If your original equipment battery requires replacement (under warranty), it may in some cases be replaced by a Motorcraft low-maintenance battery. The low-maintenance battery has removable vent caps for checking the electrolyte level and for adding water, if needed.

NOTE: If your battery has a cover/shield, make sure it is re-installed after the battery is replaced.

Check your battery's electrolyte level, at least every 12 months or 12,000 miles (20,000 km), in temperatures up to 90˚F (32˚C) and more often in temperatures above 90˚F (32˚C). Keep the electrolyte in each cell up to the "level" indicator. Do not overfill the battery cell.

If the electrolyte level in your battery gets low, you can add plain tap water to the battery, as long as you don't use hard water, or water with a high mineral or alkali content. If possible, however, try to only fill the battery cell with distilled water. If the battery needs water often, have the charging system checked.

Help Us Protect Our Environment

Ford Motor Company strongly recommends that used lead-acid batteries be returned to an authorized recycling facility for disposal.

Battery recycling symbol

Because your vehicle's engine is electronically controlled by a computer, some control conditions are maintained by power from the battery. If you ever disconnect the battery, install a new battery, or experience a dead battery, you must allow the computer to "relearn" its idle conditions before your vehicle will idle at its best. To let the engine do this, apply the parking brake, put the gearshift in Park (automatic transmission) or Neutral (manual transmission), turn off all the accessories, and start the vehicle. Let the engine idle for at least one minute.

If you do not let the engine relearn its idle, the idle quality of your vehicle may be adversely affected until the idle is relearned. Your vehicle will eventually relearn its idle while you drive it, but it takes much longer than if you use the previous procedure.

⚠WARNING

Batteries normally produce explosive gases which can cause personal injury. Therefore, do not allow flames, sparks or lit tobacco to come near the battery. When charging or working near a battery, always cover your face and protect your eyes, and also provide ventilation.

⚠WARNING

Batteries contain sulfuric acid which burns skin, eyes, and clothing.

If the acid touches someone's skin, eyes, or clothing, immediately flush the area with water for at least 15 minutes. If someone swallows the acid, have him or her drink lots of milk or water first, then Milk of Magnesia, a beaten egg, or vegetable oil. Call a doctor immediately.

⚠WARNING

Applying too much pressure on the ends when lifting a battery could cause acid to spill. Lift the battery with a carrier or with your hands on the opposite corners.

Automatic Transmission Fluid

Under normal driving conditions automatic transmission fluid should be changed every 30,000 miles (48,000 km) or 21,000 miles (34,000 km) if under severe duty conditions. However, if the transmission is not working properly, for instance, the transmission may slip or shift slowly, or you may notice some sign of fluid leakage, the fluid level should be checked.

It is preferable to check the transmission fluid level at normal operating temperature, after approximately 20 miles (30 km) of driving. However, if necessary, you can check the fluid level without having to drive 20 miles to obtain a normal operating temperature if outside temperatures are above 50˚F (10˚C).

NOTE: If the vehicle has been operated for an extended period at high speeds or in city traffic during hot weather, or pulling a trailer, the vehicle should be turned off for about 30 minutes to allow the fluid to cool before checking.

Checking the Automatic Transmission Fluid

With the vehicle on a level surface, start the engine and move the transmission shift selector through all of the gear ranges allowing sufficient time for each position to engage. Securely latch the transmission shift selector in the P (Park) position, fully set the parking brake and leave the engine running.

NOTE: Vehicles equipped with the 4x4 option must have the 4x4 shift selector in any position other than neutral. If in neutral the vehicle may move.

⚠WARNING
Your vehicle should not be driven if the fluid level is below the bottom hole on the dipstick and outside temperatures are above 50˚F (10˚C).

Wipe off the dipstick cap (located on the passenger's side of the engine), pull the dipstick out and wipe the indicator end clean. Put the dipstick back into the filler tube and make sure it is fully seated. Pull the dipstick out and read the fluid level.

When checking fluid at normal operating temperature, the fluid level should be within the crosshatched area on the dipstick. When the vehicle has not been driven, and outside temperature is above 50˚F (10˚C), the fluid level should be between the holes on the dipstick.

Adding Automatic Transmission Fluid

The fluid type is stamped on the dipstick. Before adding any fluid, be sure that the correct type will be used.

Add fluid in 1/2 pint (.25L) increments through the filler tube to bring the level to the correct area on the dipstick. If an overfill occurs, excess fluid should be removed by a qualified technician.

NOTE: Always dispose of used automotive fluids in a responsible manner. Follow your community's standards for disposing of these types of fluids. Call your local recycling center to find out about recycling automotive fluids.

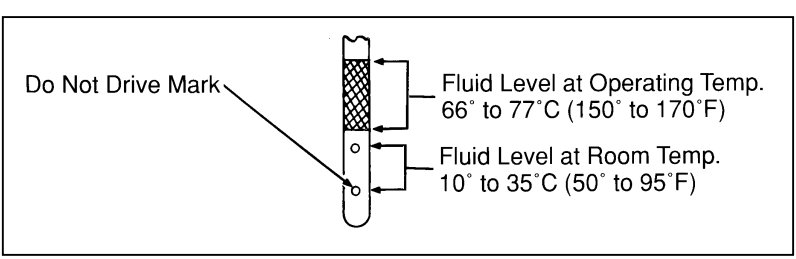

Automatic transmission dipstick

Manual Transmission and Transfer Case Fluid

Checking the Manual Transmission Fluid

Clean the filler plug on the side of the case. Remove the filler plug. The fluid level should be up to the bottom of the filler plug hole.

If additional fluid is required:

1. Add enough fluid through the filler plug hole to bring the level up to the bottom of the hole. Use only fluid certified to meet Ford Motor Company lubricant specification as listed under *Refill Capacities, Motorcraft Parts, and Lubricant Specifications,* later in this chapter.
2. Replace the filler plug in its original position, making sure it is fully seated.

The Clutch

The clutch on your vehicle is automatically self-adjusting and should not require any routine service.

During normal operation the fluid level in the clutch reservoir will slowly rise. If for any reason the fluid level drops, maintain the fluid level at the step in the reservoir body.

If it becomes necessary to remove the reservoir cap, thoroughly clean the reservoir cap before removing it to prevent dirt or water from entering the reservoir. Remove the internal diaphragm and then add only a DOT 3 brake fluid such as Ford High Performance DOT 3 Brake Fluid, meeting Ford specification ESA-M6C25-A.

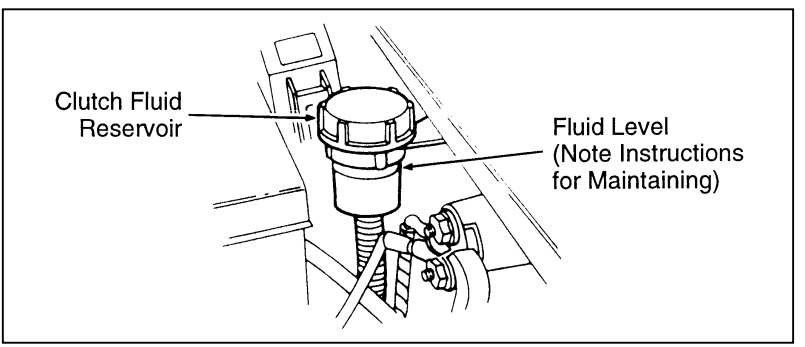

Clutch fluid reservoir

Driveline Universal Joint and Slip Yoke

The universal joints that come standard with your vehicle do not require lubrication. If your original equipment universal joints are replaced with universal joints equipped with grease fittings, lubrication will be necessary at the intervals shown in the *Maintenance Schedule and Record* booklet.

Your vehicle may be equipped with a constant velocity or double cardan joint at the transfer case end of the driveshaft. The front driveshaft double cardan joint may be fitted with a flush type grease fitting that requires an adapter to permit proper lubrication. Lubricate the drive joint according to the intervals shown in the *Maintenance Schedule and Record* booklet.

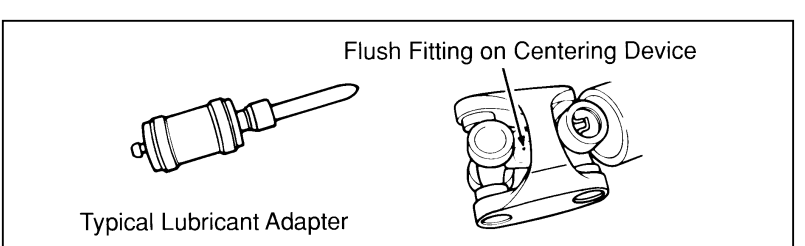

Double cardan joint

Brake Fluid

Your vehicle is equipped with a brake fluid level indicator in the master cylinder which lights the BRAKE warning light on the instrument panel when the brake fluid level is low.

Under normal circumstances, your vehicle should not use up brake fluid rapidly. However, expect the level of the brake fluid to slowly fall as you put more mileage on your vehicle and the brake pads wear.

Check the brake fluid at least once a year. You can do this by looking at the fluid level in the plastic brake fluid reservoir on the master cylinder. The fluid level should be at or near the MAX mark.

⚠WARNING
Brake fluid is toxic.

If brake fluid contacts eyes, flush eyes with running water for 15 minutes. Get medical attention if irritation persists. If taken internally, drink water and induce vomiting. Get medical attention immediately.

If the fluid is low, carefully clean and remove the cap from the reservoir. Fill the reservoir to the MAX line with Ford High Performance DOT 3 Brake Fluid C6AZ-19542-AA, C6AZ-19542-BA, or equivalent DOT 3 fluid meeting Ford specification ESA-M6C25-A.

NOTE: If brake fluid is spilled on painted surfaces, it must be flushed and wiped away immediately. Brake fluid may dissolve the paint finish on your vehicle.

⚠WARNING
If you use a brake fluid that is not DOT 3, you will cause permanent damage to your brakes.

Do not fill the reservoir above the MAX line.

If you find that the fluid level is excessively low — below the seam or ridge on the outside of the plastic reservoir — have the brake system inspected.

⚠WARNING

Do not let the reservoir for the master cylinder run dry. This may cause the brakes to fail.

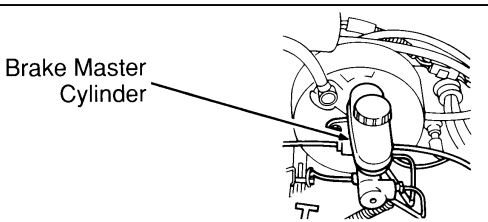

Brake master cylinder

Power Steering Fluid

Check the level of the power steering fluid at least twice a year (i.e., every Spring and Fall).

Checking and Adding Power Steering Fluid

1. Start the engine and let it run until the power steering fluid reaches normal operating temperature. The power steering fluid will be at the right temperature when the engine coolant temperature gauge in the instrument cluster is near the center of the NORMAL operating temperature range.
2. While the engine idles, turn the steering wheel back and forth several times. Make sure that the cap assembly is installed at this time.
3. Turn the engine off.

4. Check the fluid level on the dipstick (which is highlighted in yellow in your vehicle). The fluid level should be between the arrows in the FULL HOT range, which is marked on the side of the dipstick, opposite the side marked FULL COLD. Do not add fluid if the level is within the FULL HOT range.

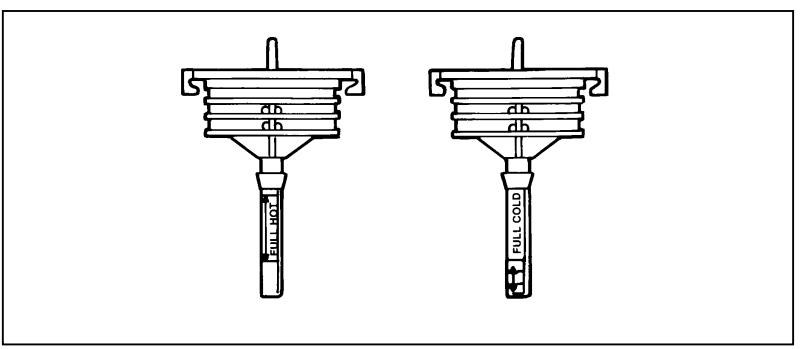

Power steering dipstick

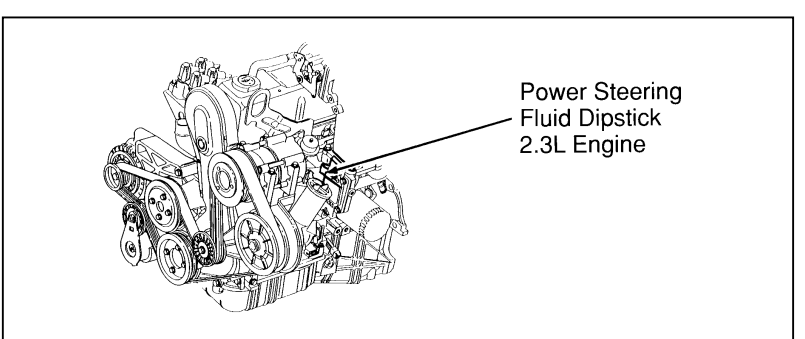

Power steering reservoir

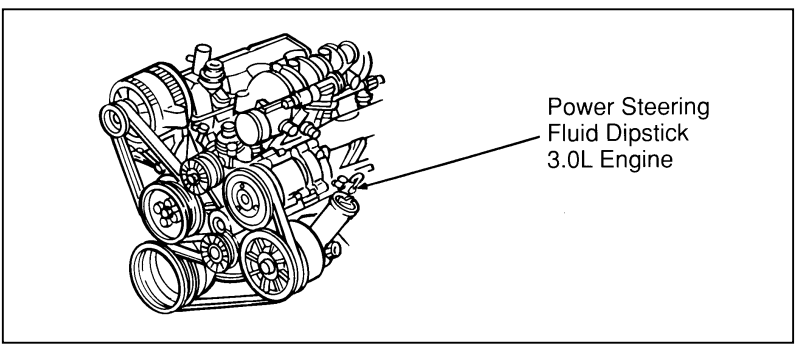

Power steering reservoir

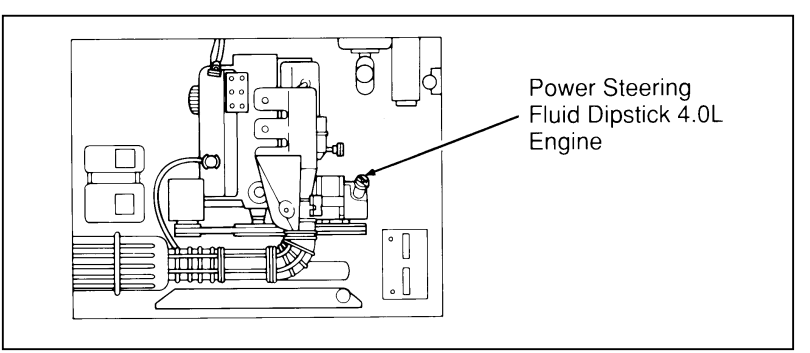

Power steering dipstick location

5. If the power steering fluid is low, add fluid in small amounts, continuously checking the level, until you reach the FULL HOT range. Do not overfill.
6. When you are finished, put the dipstick back in and make sure that it fits snugly.

Use only power steering fluid that meets Ford specification such as MERCON® Automatic Transmission Fluid (or equivalent).

If the power steering fluid is low, do not drive your vehicle for a long period of time before adding fluid. This can damage the power steering pump.

If you check the power steering fluid when it is cold, make sure that the fluid reaches the FULL COLD range on the dipstick. The reading will only be accurate if the fluid temperature is approximately 50 to 85˚F (10 to 30˚C).

NOTE: Do not turn the steering wheel of your vehicle with the engine off. It could force power steering fluid out from the reservoir cap or in extreme cases, it could unseat the cap.

Fuses

Fuses protect your vehicle's electrical system from overloading. If electrical parts in your vehicle are not working, the system may have been overloaded and blown a fuse. Before you replace or repair any electrical parts, check the appropriate fuses.

The following charts tell you which fuses protect each electrical part of your vehicle. If a fuse blows, all the parts of your vehicle that use that circuit will not work.

Once you have determined which fuses to check, follow the procedures under *Checking and replacing fuses* later in this chapter.

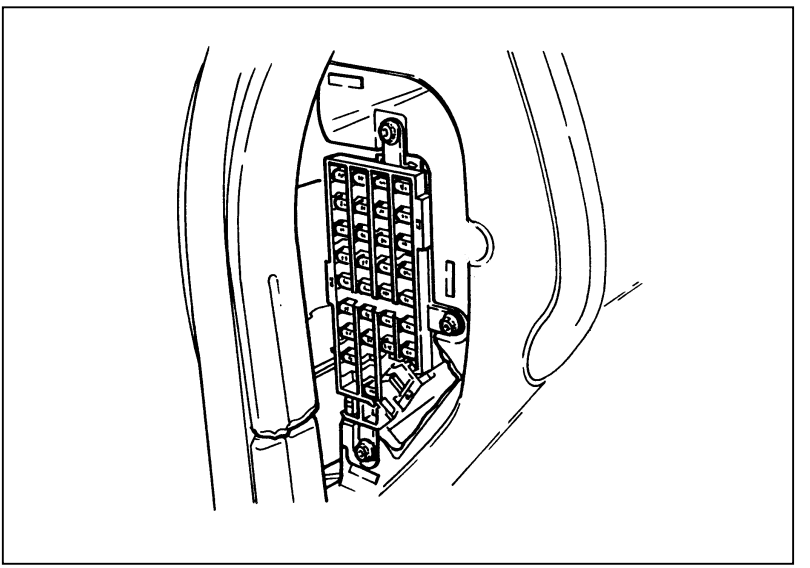

Fuse panel (located left side of instrument panel)

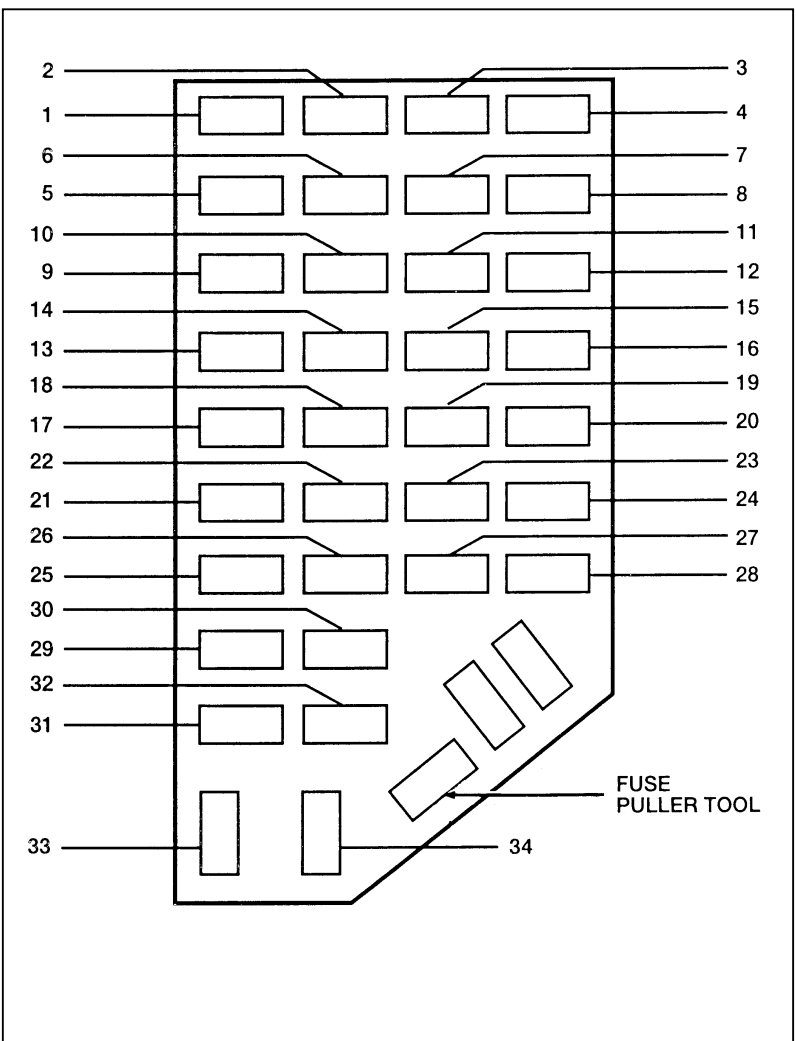

Fuses and their location

Fuse/CB/Relay Loc.	Fuse Amp. Rating	Description
1	7.5 Amp	• Power mirror
2	–	• Open
3	15 Amp	• Parking lamps
4	10 Amp	• Left headlamp
5	10 Amp	• OBD II system
6	7.5 Amp	• Air bag system • Blower relay
7	7.5 Amp	• Illum. switches
8	10 Amp	• Right headlamp • Fog lamp system
9	10 Amp	• Anti-lock system
10	7.5 Amp	• Speed control • GEM system • Brake interlock
11	7.5 Amp	• Warning lamps
12	10 Amp	• Front wash system
13	15 Amp	• PCM system • Stop lamps • 4 wheel drive • Anti-lock brake • Speed control
14	10/20 Amp	• Anti-lock system
15	7.5 Amp	• Air bag system • Alternator
16	30 Amp	• Front wiper
17	15 Amp	• Cigar lighter
18	15 Amp	• A/C system
19	25 Amp	• Ignition coil • PCM system

Fuse/CB/ Relay Loc.	Fuse Amp. Rating	Description
20	7.5 Amp	• Radio • GEM system • Anti-theft
21	15 Amp	• Hazard lamps
22	10 Amp	• Turn signals
23	–	NOT USED
24	10 Amp	• Starter relay • Anti-theft
25	7.5 Amp	• Speedometer • GEM system
26	10 Amp	• 4R44E/4R55E overdrive • Backup lamps • DRL system
27	10 Amp	• Under hood lamp • Map lights • Glove box lamp • Dome lamp • Visor lamps • 4x4 system
28	7.5 Amp	• GEM system
29	10 Amp	• Audio system
30	–	NOT USED
31	–	NOT USED
32	–	NOT USED
33	15 Amp	• High beam lamps
34	–	NOT USED

Power distribution box

The high current fuses contained in the Power Distribution Box protect your vehicle's main electrical systems from overloads; these fuses provide the connection between the battery and your vehicle's electrical systems.

The high current fuses are coded as follows: 30 amp -light green, 40 amp - orange, 50 amp - red, 60 amp -blue.

⚠WARNING
Always disconnect the battery before servicing high current fuses.

Ford recommends that high current fuses be replaced by a qualified technician.

⚠WARNING
Always replace the cover to the Power Distribution Box before reconnecting the battery or refilling fluid reservoirs.

A blown high current fuse may be replaced but will continue to blow until the cause of the overload condition is corrected.

⚠WARNING
Always replace a fuse with one that has the specified amperage rating. Using a fuse with a higher amperage rating can cause severe wire damage and could start a fire.

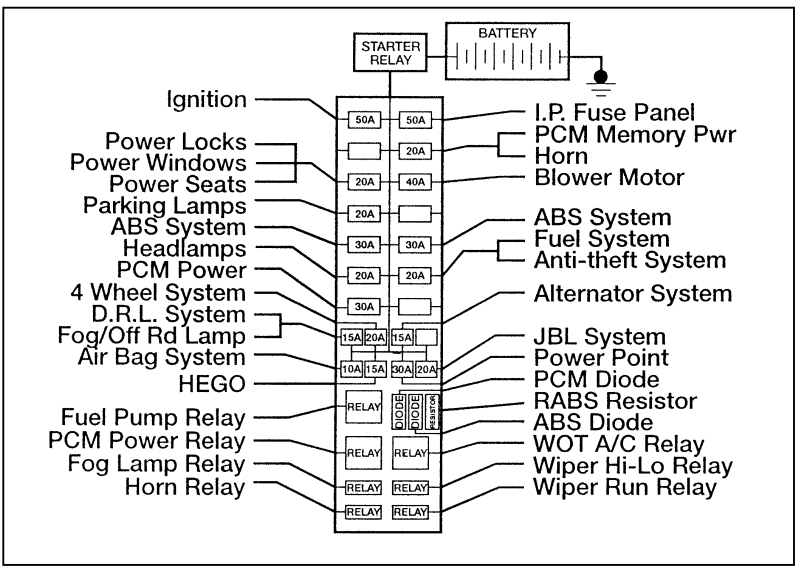

Power distribution box

Checking and Replacing Fuses

If you need to check a fuse, follow these steps:

1. Find the fuse panel, which is located in the left end of the instrument panel. The power distribution box (described earlier in this section) is found in the engine compartment, mounted on a bracket attached to the left fender apron.

   To access the fuse panel, remove the fuse panel cover by inserting your finger in the divot and pulling on the cover. The underside of the cover contains four spare fuses. A fuse pulling tool is located in the lower right corner of the fuse panel in case you need to replace a blown fuse.

   The spare fuses for your vehicle are color coded as follows: 10 amp — red, 15 amp — light blue, 20 amp — natural, 30 amp — light green.

2. On the fuse panel cover, find the number of the fuse you want to check. The diagram on the cover tells you where to locate the fuse on the panel.
3. Check the fuse to see if it is blown. Look through the clear side of the fuse to see if the metal wire inside is separated. If it is, the fuse is blown and should be replaced.

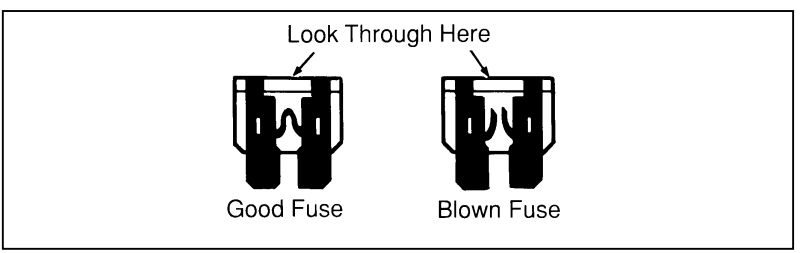

The side view of a fuse

4. Replace the fuse with one that has the right amperage rating (see previous chart).

⚠WARNING

Always replace a fuse with one that has the specified amperage rating. Using a fuse with a higher amperage rating can cause severe wire damage and could start a fire.

5. Put the fuse panel cover back on.

Even after you replace a fuse, it will continue to blow if you do not find what caused the overload. If the fuse continues to blow, have your electrical system checked.

Relays

Relays are devices which recieve signals from components or systems. After receiving signals, relays transfer these signals to activate or deactivate other components or systems.

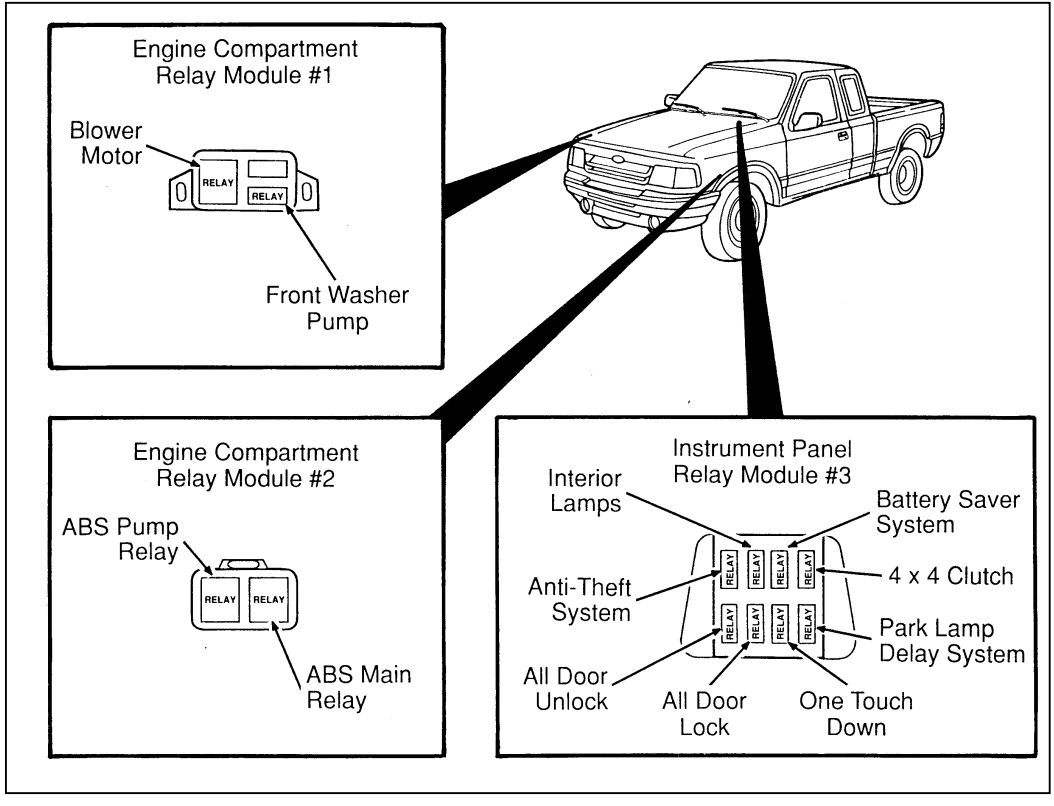
Engine Compartment
Relay Module #1
Blower
Motor
RELAY
RELAY
Front Washer
Pump
Engine Compartment
Relay Module #2
ABS Pump
Relay
RELAY
RELAY
ABS Main
Relay
Instrument Panel
Relay Module #3
Interior
Lamps
Battery Saver
System
Anti-Theft
System
4 x 4 Clutch
Park Lamp
Delay System
All Door
Unlock
All Door
Lock
One Touch
Down

Lights and Bulb Replacement

It is a good idea to check the operation of the following lights frequently:

- headlamps
- high-mount brakelamp
- tail lamps
- brakelamps
- hazard flasher
- turn signals
- license plate lamp
- fog lamps

The alignment of your headlamps should be checked if:

- oncoming motorists frequently signal you to turn off your vehicle's high beams when you do not have the high beams on
- the headlamps do not seem to give you enough light to see clearly at night
- the headlamp beams are pointed substantially away from a position slightly down and to the right

Headlamp Bulb

The headlamps on your vehicle use replaceable bulbs. When the lamp burns out, simply replace the bulb, rather than the whole lamp.

⚠WARNING

Handle a halogen headlamp bulb carefully and keep out of children's reach. Grasp the bulb only by its plastic base and do not touch the glass. The oil from your hand could cause the bulb to break the next time the headlamps are operated.

NOTE: If the bulb is accidently touched, it should be cleaned with rubbing alcohol before being used.

Do not remove the burned-out bulb unless you can immediately replace it with a new one. If a bulb is removed for an extended period of time, contaminants may enter the headlamp housing and affect its performance.

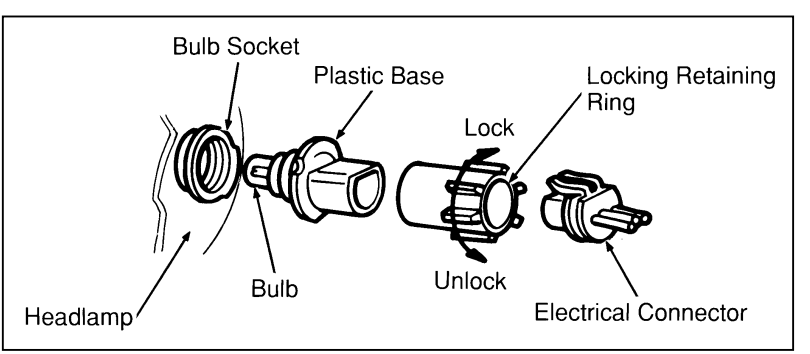

Parts of a headlamp

Removing the headlamp bulb

1. Make sure that the headlamp switch is in the OFF position.
2. Lift the hood. Remove the electrical connector behind the headlamp by grasping the wires and pulling it rearward.
3. Remove the bulb retaining ring by turning it 1/8 of a turn to free it from the socket. Then slide the ring off the plastic base. Keep the ring. **You must use it again to hold the new bulb in place.**
4. Carefully remove the bulb assembly from its socket by gently pulling it rearward without turning.

Installing the headlamp bulb

1. With the flat side of the bulb's plastic base facing upward, insert the glass end of the bulb into the socket. You may need to turn the bulb left or right to line up the grooves in the plastic base with the tabs in the socket. When the grooves are aligned, push the bulb into the socket until the plastic base contacts the rear of the socket.
2. Slip the bulb retaining ring over the plastic base until it contacts the rear of the socket. Lock the ring into the socket by rotating it clockwise until you feel a "stop."
3. Push the electrical connector into the rear of the plastic base until it snaps, locking it into position.
4. Turn the headlamps on and make sure that they work properly. If the headlamp was correctly aligned before you changed the bulb, you should not need to align it again.

Tail Lamp Bulb

Removing the tail lamp bulb

1. Remove the four (4) screws retaining rear lamp to vehicle.
2. Remove rear lamp.
3. Remove socket from lamp.
4. Remove bulb from socket.

Installing the tail lamp bulb

1. Install tail lamp bulb in socket.
2. Install socket to lamp.
3. Install lamp to vehicle.
4. Install four (4) lamp retaining screws.

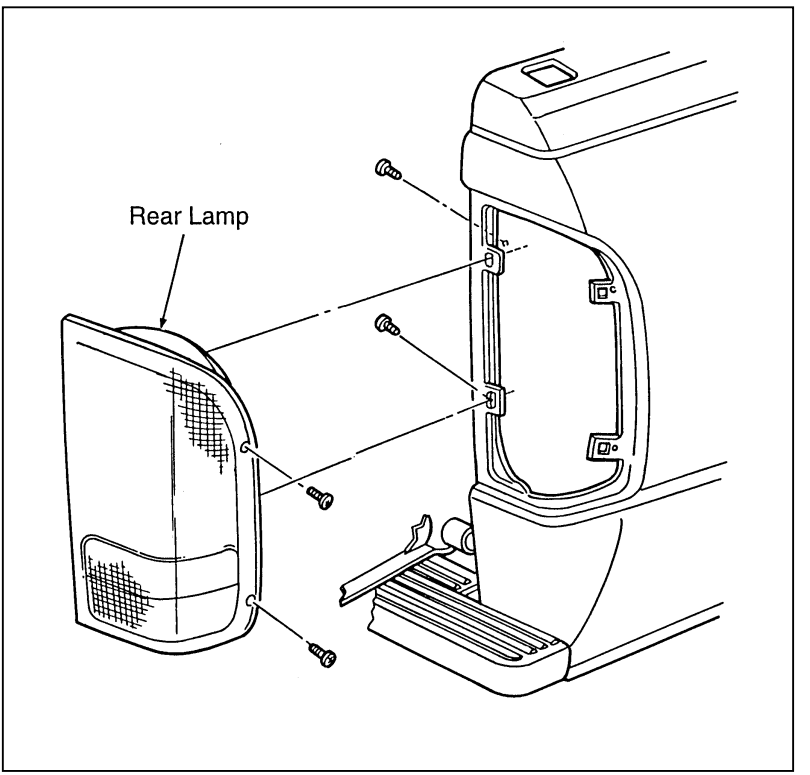

Replacing the tail lamp bulb

Bulb Specifications

Description	No. of Lamps Req'd	Trade Number
Front Lamps — Exterior	–	–
• Front Parking Lamp and Turn Signal and Front Side Marker Lamp	2	3157
• Headlamps	2	9007
• Underhood Lamp (if equipped)	1	906
• Fog Lamps (4x4)	2	H3
Rear Lamps — Exterior	–	–
• Hi-Mount Brakelamp	2	906
• Backup Lamp	2	3156
• Cargo Lamp (if equipped)	1	922
• License Plate Lamp w/o Bumper	1	194
• License Plate Lamp w/Bumper	2	194
• Rear Tail/Brakelamp	2	3157
• Rear Turn Lamp	2	3156
Interior Courtesy Lamps	–	–
• Dome Lamp	1	912
• Instrument Panel Gauge Illumination	5	194
• Map/Dome — SuperCab (if equipped)	2	906
• Map/Dome — Reg. Cab (if equipped)	1 2	212-2 906
Radio Illumination	–	①
Speed Control Switch Illumination	2	③
Instrument Panel	–	–
• Glove Compartment Lamp	1	194
Instrument Cluster	1 each	194
Instrument Panel Switch Nomenclature	–	–
• A/C Control Illumination	1	161
• Headlamp Switch Illumination	1	1815
• Heater Control Illumination	1	161
• Transfer Case Switch Indicator Light	1	②

① Replaceable at Ford authorized radio service centers.
② Refer to your Ford dealer for bulb replacement.
③ Replace speed control switch.

Rear lighting wire functions

Wire Color	w/Tow Pkg.	Circuit Function
Brown	Brown — White	Parking Lamps
Orange-Lt. Blue Stripe	Dark Green	R.H. Turn Lamp
Lt. Green-Orange Stripe	Yellow	L.H. Turn Lamp
Black-Pink Stripe	Red-Yellow	Reverse Lamps
Black	White	Ground
Lt. Green	—	Brake Lamp

Emission Control System

Your vehicle is equipped with a catalytic converter which enables your vehicle to comply with applicable exhaust emission requirements.

To make sure that the catalytic converter and the other emission control parts continue to work properly:

- Use only unleaded fuel.
- Avoid running out of fuel.
- Do not turn off the ignition while your vehicle is moving, especially at high speeds.
- Have the services listed in your *Maintenance Schedule and Record* booklet performed according to the specified schedule.

⚠WARNING

Do not park, idle, or drive your vehicle in dry grass or other dry ground cover. The emission system heats up the engine compartment and exhaust system, which can start a fire.

⚠WARNING

On vehicles without original equipment floor covering or insulation, do not let passengers ride in your truck in a manner that allows contact between skin and the metal floor.

Watch for fluid leaks, strange odors, smoke, loss of oil pressure, the charge warning light, the check engine light, or the temperature warning light. These sometimes indicate that the emission system is not working properly.

Do not make any unauthorized changes to your vehicle or engine. Changes that cause more unburned fuel to reach the exhaust system can increase the temperature of the engine or exhaust system.

By law, anyone who manufactures, repairs, services, sells, leases, trades vehicles, or supervises a fleet of vehicles is not permitted to intentionally remove an emission control device or prevent it from working. In some of the United States and in Canada, vehicle owners may be liable if their emission control device is removed or is prevented from working.

Never use a metal exhaust collector when you service your vehicle. If the metal collector contacts any of your vehicle's plastic trim or bumper parts they could melt or deform.

Do not drive your vehicle if it does not operate properly. See your dealer if the engine runs on for more than five seconds after you shut it off or if it misfires, surges, stalls, or backfires.

Information about your vehicle's emission control system is on the Vehicle Emission Control Information decal located on or near the engine. This decal identifies engine displacement and gives some tune-up specifications.

Readiness for Inspection/Maintenance Testing

In some localities it may become a legal requirement to pass an Inspection/Maintenance (I/M) test of the On-Board Diagnostic (OBD) II system. If the vehicle's powertrain system or its battery has just been serviced, the OBD II system is reset to a not ready for I/M testing condition. To prepare for I/M testing, the law specifies a "need for additional mixed city and highway driving to complete the check" of the OBD II system. As soon as all of the OBD II system checks are successfully completed, the OBD II system is set to the ready condition. The amount of driving required to reach the ready condition varies with individual driving patterns. To complete this requirement in the minimum amount of time, refer to the OBD II Drive Cycle defined below. If the vehicle owner cannot or does not want to do the additional driving required by law, a service center can perform this drive cycle as it would any other type of repair work.

OBD II Drive Cycle

The following steps must be run in the order shown. If any steps are interrupted, repeat the preceding step. Any safe driving mode is acceptable between steps.

Always drive vehicle in safe manner according to traffic conditions and obey all traffic laws.

The engine must be warmed up and at operating temperature before proceeding with the drive modes of the following OBD II Drive Cycle.

1. Start the engine. Drive or idle (in neutral) the vehicle for 4 minutes.
2. Idle the vehicle in drive (neutral for automatic transmissions) for 40 seconds.
3. Accelerate the vehicle to 45 mph (72 km/h) (for manual transmissions upshift from 1st to 5th gear, but hold in 2nd for at least 5 seconds) at 1/4 to 1/2 throttle for 10 seconds.
4. Drive the vehicle with a steady throttle at 45 mph (72 km/h) (manual transmissions use 5th gear) for 30 seconds.
5. Idle the vehicle in drive (neutral for manual transmissions) for 40 seconds.

6. Continue to drive the vehicle in city traffic at speeds between 25 and 40 mph (40-64 km/h) (manual transmissions primarily drive vehicles in 3rd and 4th gear when possible) for 15 minutes. During the 15 minute drive cycle the following modes must be achieved:

   a. at least 5 stop and idle modes at 10 seconds each.

   b. acceleration from idles at 1/4 to 1/2 throttle position, and

   c. choose three different speeds to do 1.5 minute steady state throttle drives.

7. Accelerate the vehicle up to between 45 and 60 mph (72-97 km/h) (manual transmissions upshift to 5th gear). This should take approximately 8 seconds.

8. Drive vehicle and hold the throttle steady at the selected speed between 45 and 60 mph (72-97 km/h) (manual transmissions use 5th gear) for approximately 5 minutes.

9. Drive the vehicle for 5 minutes at varying speeds between 45 and 60 mph (72-97 km/h) (manual transmissions use 5th gear).

10. Bring the vehicle back to idle. Idle in drive (manual transmissions use 5th gear) for 40 seconds.

11. OBD II drive cycle has been completed. Vehicle can be turned off when convenient.

Refill Capacities, Motorcraft Parts, and Lubricant Specifications

Component	Capacities	
	U.S. Measure	Liters
Engine Crankcase②	(Quarts)	
2.3L (140 CID)	5.0	4.7
3.0L (182 CID)	4.5	4.3
4.0L (245 CID)	5.0	4.7
Transmission and Transfer Case	(Pints)	
5-Speed Manual–Mazda R1	5.6	2.65
	(Quarts)	
Automatic 4R44E/4R55E (4x4)	9.8	9.3
Automatic 4R44E/4R55E (4x2)	9.5	9.0
	(Pints)	
4-Wheel Drive Transfer Case, Warner 13-54	2.5	1.2
Engine Coolant	(Quarts)	
2.3L (140 CID) without A/C	6.5	6.2
2.3L (140 CID) with A/C	7.2	6.8
3.0L (182 CID) without A/C	9.5	9.0
3.0L (182 CID) with A/C	10.2	9.6
4.0L (245 CID) without A/C	7.8	7.4
4.0L (245 CID) with A/C	8.6	8.1
Rear Axle①	(Pints)	
Ford Conventional and Traction-Lok 7.5"	5.0	2.4
Ford Conventional and Traction-Lok 8.8"	5.0	2.4
Windshield Washer Reservoir	(Quarts) 2.8	2.6

①Fill to 1/4" to 9/16" below bottom of fill hole.

②Includes filter replacement.

NOTE: All rear axle lube quantities must be replaced every 100,000 miles (160,000 km) or if the axle has been submerged in water. Otherwise, the lube should not be checked or changed unless a leak is suspected or repair required. Refer to the maintenance schedule at the back of this guide.

Component	Capacities	
	U.S. Measure	Liters
Front Axle	(Pints)	
Dana 35 Front Axle ①	3.5	1.7
Dana 28 Front Axle ②	(Pints)	
2.3L and 3.0L Auto. Only	3.0	1.4
Fuel Tank **Wheelbase**	(Gal.)	
Standard		
Regular Cab SWB/LWB	16.5	62.4
Optional		
Regular Cab ③ LWB Only	20	75.7
Standard – SuperCab	20	75.7

①Fill with 56 oz. ± 1/8″ (3mm) to bottom of fill hole.
②Fill with 48 oz. ± 1/8″ (3mm) to bottom of fill hole.
③Increased capacity
SWB — Short wheelbase
LWB — Long wheelbase

Motorcraft Parts

Engine	Motorcraft Part Numbers		
	2.3L (140 CID) EFI	3.0L (183 CID) EFI	4.0L (245 CID) EFI
Spark Plug① – Platinum	AWSF-32F②	AWSF-32PP*	AWSF-42PP*
Air Filter	FA-1616	FA-1616	FA-1616
Fuel Filter	FG-872	FG-872	FG-872
Oil Filter	FL-1A	FL-400A	FL-1A
Battery Regular Cab Optional SuperCab	 BX-58C BXT-65-650 BXT-65-650	 BX-58C BXT-65-650 BXT-65-650	 BXT-65-650 BXT-65-850 BXT-65-650
P.C.V. Valve	EV-147	EV-130	EV-225

① Refer to Vehicle Emission Control Identification Decal for spark plug and gap specifications.
② Two spark plugs per cylinder required (8 total).
* If any spark plug needs to be removed for examination, each spark plug removed must be reinstalled in the same cylinder. Cylinders #1, #2, and #3 have a "PG" suffix. Cylinders #4, #5, and #6 have a "P" suffix. If any spark plug needs to be replaced, use only spark plugs with the service part number suffix letters "PP" as shown on the engine decal.

Lubricant Specifications

Item	Ford Part Name	Ford Part Number	Ford Specification
Windshield Washer Reservoir	Ultra-Clear Windshield Washer Concentrate	C9AZ-19550-AA or BA	ESR-M17P5-A
Body Hinges, Latches, Door Striker Plates and Rotors, Seat Tracks Door Checks and Tracks, and Hood Latch and Auxiliary Latch	Multi-Purpose Grease	D0AZ-19584-AA or D7AZ-19584-AA	ESB-M1C93-A or ESB-M1C159-A
Steering Column U-Joints, Steering Linkage, Clutch Linkage Pivots, Parking Brake Linkage Pivots and Clevises, Transmission Control Linkage Pivots	Premium Long-Life Grease	XG-1-C or K	ESA-M1C75-B
Steering Gear (Manual) Housing	Steering Gear Lubricant	C3AZ-19578-A	ESW-M1C87-A
Hydraulic Clutch Master Cylinder–Brake Master Cylinder	High Performance DOT 3 Brake Fluid	C6AZ-19542-AA	ESA-M6C25-A
Brake and Clutch Pedal Shaft	Premium Long-Life Grease	XG-1-C or K	ESA-M1C75-B
Engine Oil–Gasoline Engines①	Motorcraft Motor Oil 5W-30 Super Premium	XO-5W30-QSP	WSS-M2C153-F with API Certification Mark

Item	Ford Part Name	Ford Part Number	Ford Specification
Door Weatherstrips	Silicone Lubricant	C0AZ-19553-AA	ESR-M13P4-A
Automatic Transmission Shift Linkage	Premium Long-Life Grease	XG-1-C or K	ESA-M1C75-B
4x4 Front Wheel Bearings, 4x4 Spindle Needle Bearings, Spindle Thrust Bearings and Front Drive Axle U-Joints/ Slip Spline	High Temperature 4x4 Front Axle and Wheel Bearing Grease	E8TZ-19590-A	ESA-M1C98-A
Automatic Transmission 4R44E/4R55E	Motorcraft MERCON® Automatic Transmission Fluid	XT-2-QDX	MERCON®
Parking Brake Cable	Speedometer Cable Lubricant	E6TZ-19581-A	ESF-M1C160-A
Power Steering Reservoir	Motorcraft MERCON® ATF	XT-2-QDX	MERCON®
Engine Oil Filter-2.3L, 4.0L Engines	Motorcraft Long-Life Oil Filter	(FL-1A) D9AZ-6731-A	ES-E1ZE-6714-AA
Engine Oil Filter-3.0L	Motorcraft Long-Life Oil Filter	(FL-400A) E4FZ-6731-A	ES-E4EE-6714 AA
Accelerator Throttle Lever	Premium Long-Life Grease	XG-1-C or K	ESA-M1C75-B
Ford Conventional and Traction-Lok Axles②	Motorcraft Premium Rear Axle Lubricant	XY-80W90-QL	WSP-M2C197-A

Item	Ford Part Name	Ford Part Number	Ford Specification
Drive Shaft, Universal Joints and Slip Splines	Premium Long-Life Grease	XG-1-C or K	ESA-M1C75-B
Engine Coolant	Premium Cooling System Fluid	E2FZ-19549-AA	ESE-M97B44-A
Transfer Case Front Output Slip Shaft	Premium Long-Life Grease	XG-1-C or K	ESA-M1C75-B
Front Free-Running Hubs–Automatic Front Axle Hub–4x4	Premium Long-Life Grease	XG-1-C or K	ESA-M1C75-B
Transfer Case (4x4 Only)	Motorcraft MERCON® Automatic Transmission Fluid	XT-2-QDX	MERCON®
5-Speed Manual Transmission (MAZDA R1)	Motorcraft MERCON® Automatic Transmission Fluid	XT-2-QDX	MERCON®
Dana 35 Front Axle, except 2.3L and 3.0L Auto. Trans.	4x4 Gear Oil	F1TZ-19580-A	WSL-M2C191-A
Dana 28 Front Axle, 2.3L and 3.0L Auto. Trans. (Only)	4x4 Gear Oil	F1TZ-19580-A	WSL-M2C191-A

① For proper oil usage, refer to *Engine Oil Recommendations* in this chapter.
② Add 4 oz. of Friction Modifier WSP-M2C196-A (Ford Part No. F3TZ-19B546-MA) for complete refill of Ford Traction-Lok Rear Axles.

Vehicle Storage

Maintenance Tips

If you plan on storing your vehicle for an extended period of time (60 days or more), refer to the following maintenance recommendations to ensure your vehicle stays in good operating condition.

General

- Store all vehicles in a dry, ventilated place.
- Protect from sunlight, if possible.
- If vehicles are stored outside, they require regular maintenance to protect against rust and damage.

Body

- Wash vehicle thoroughly to remove dirt, grease, oil, tar or mud from exterior surfaces, rear wheel housing and underside of front fenders.
- Periodically wash vehicles stored in exposed locations.
- Touch-up raw or primed metal to prevent rust.
- Cover chrome and stainless steel parts with a thick coat of auto wax to prevent discoloration. Re-wax as necessary when the vehicle is washed.
- Lubricate all hood, door and trunk lid hinges and latches with a light grade oil.
- Cover interior soft trim to prevent fading.
- Keep all rubber parts free from oil and solvents.

Engine

- Start engine every 15 days. Run at fast idle until it reaches normal operating temperature.
- With your foot on the brake, shift through all the gears while the engine is running.

Fuel system

- Fill fuel tank with high-quality unleaded fuel until the first automatic shutoff of the fuel pump nozzle.

NOTE: During extended periods of vehicle storage (60 days or more), fuel may deteriorate due to oxidation. This can damage rubber and other polymers in the fuel system and may also clog small orifices.

Ford Gas Stabilizer should be added whenever actual or expected storage periods exceed 60 days. Follow the instructions on the label. The vehicle should then be operated at idle speed to circulate the additive throughout the fuel system.

A volatile corrosion inhibitor added to the fuel system will protect the fuel system's inner surfaces from corrosion. Follow the instructions packaged with the product.

Cooling system

- Protect against freezing temperatures.

Battery

- Check and recharge as necessary.
- Keep connections clean and covered with a light coat of grease.

Brakes

- Make sure brakes and parking brake are fully released.

Tires

- Maintain recommended air pressure.

Miscellaneous

- Make sure all linkages, cables, levers and clevis pins under vehicle are covered with grease to prevent rust.
- Move vehicles at least 25 feet (8 m) every 15 days to lubricate working parts and prevent corrosion.

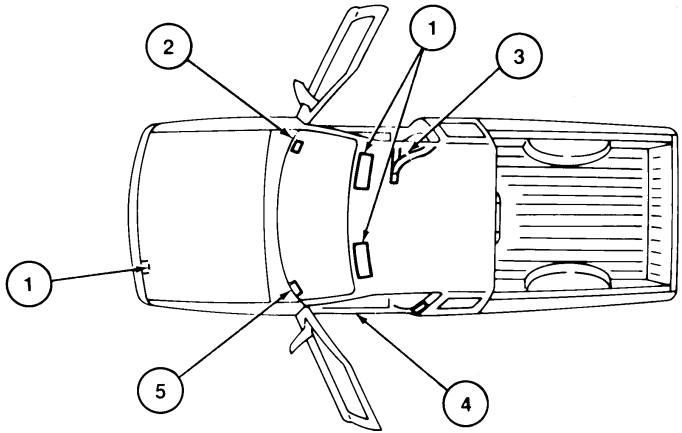

No.	Description	Refer to this label for information regarding:
1	Air Bag Warning Label	Air bag precautions
2	Fuel Pump Shut Off Label	Fuel pump shut off location
3	Child Seat Label	Child seat installation precautions
4	Safety Compliance Certification Label	Name and date of manufacturer, GVWR*, GAWR**, wheel and tire information
5	Vehicle Identification Number (VIN) Label	Servicing or warranty information specific to your vehicle

* Gross Vehicle Weight Rating ** Gross Axle Weight Rating

Front exterior view

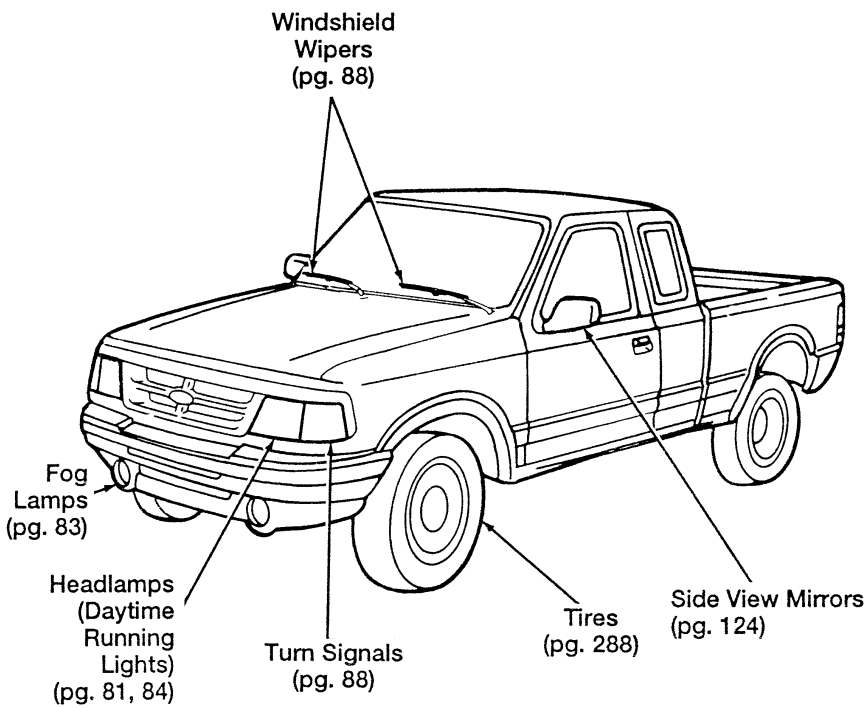

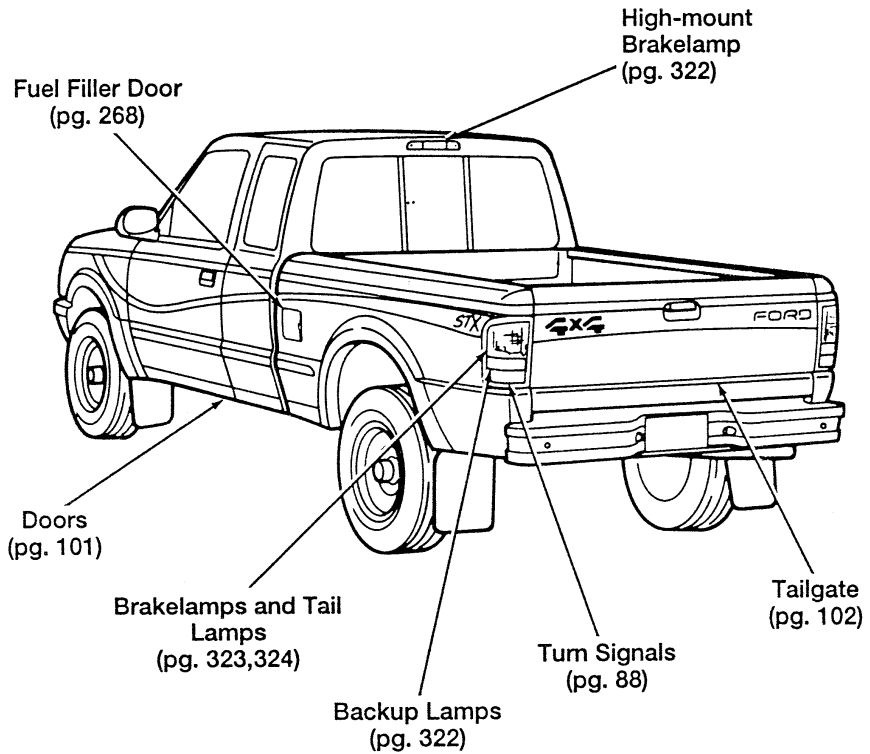
High-mount Brakelamp (pg. 322)
Fuel Filler Door (pg. 268)
STX
4x4
FORD
Doors (pg. 101)
Brakelamps and Tail Lamps (pg. 323,324)
Backup Lamps (pg. 322)
Turn Signals (pg. 88)
Tailgate (pg. 102)

Entrance view

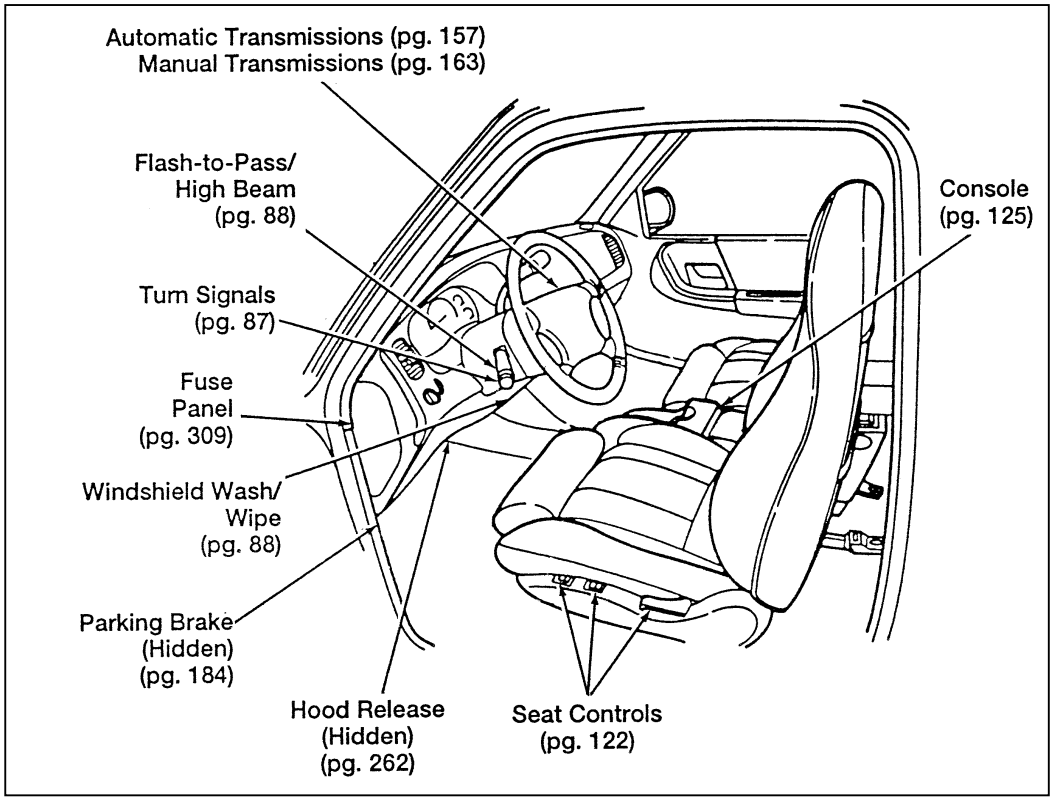

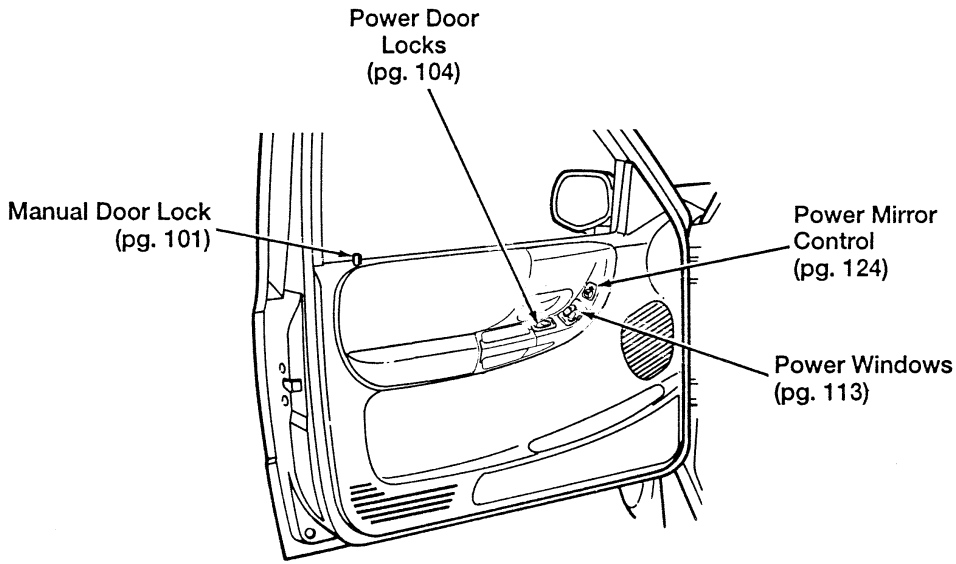
Power Door
Locks
(pg. 104)
Manual Door Lock
(pg. 101)
Power Mirror
Control
(pg. 124)
Power Windows
(pg. 113)

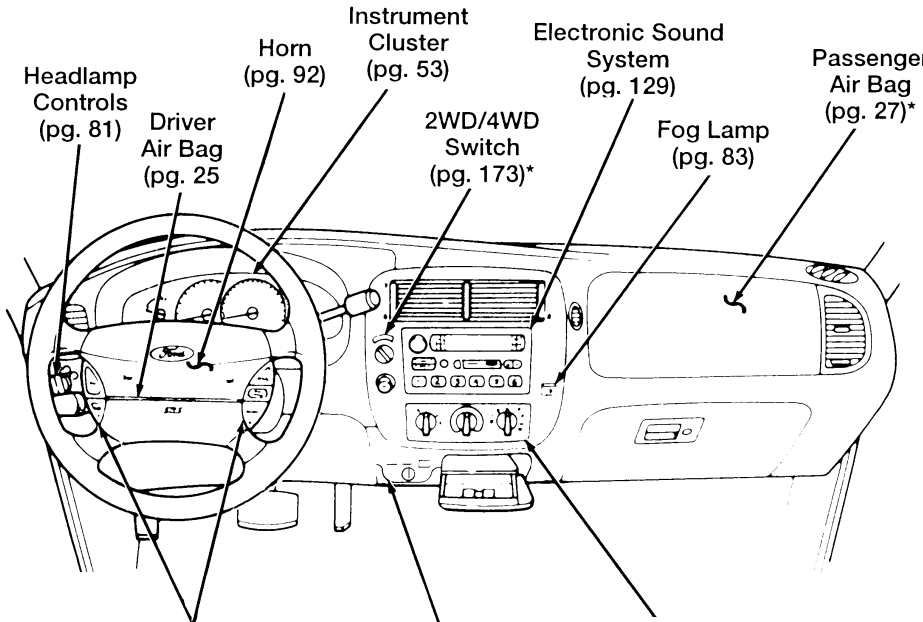
Headlamp Controls (pg. 81)
Driver Air Bag (pg. 25
Horn (pg. 92)
Instrument Cluster (pg. 53)
2WD/4WD Switch (pg. 173)*
Electronic Sound System (pg. 129)
Fog Lamp (pg. 83)
Passenger Air Bag (pg. 27)*
Speed Control (pg. 93)
Passenger Side Air Bag Deactivation Switch (pg. 28)*
Climate Control System (pg. 74)

*If Equipped

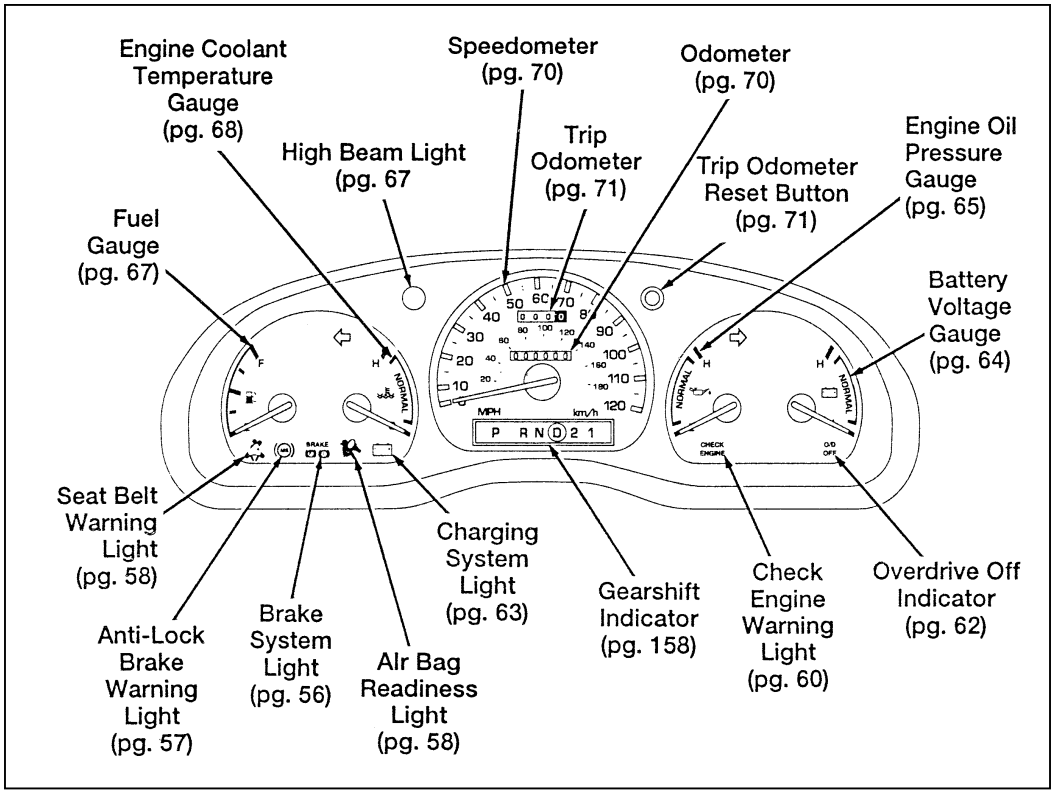
Engine Coolant Temperature Gauge (pg. 68)
Speedometer (pg. 70)
Odometer (pg. 70)
High Beam Light (pg. 67)
Trip Odometer (pg. 71)
Trip Odometer Reset Button (pg. 71)
Engine Oil Pressure Gauge (pg. 65)
Fuel Gauge (pg. 67)
Battery Voltage Gauge (pg. 64)
Seat Belt Warning Light (pg. 58)
Charging System Light (pg. 63)
Gearshift Indicator (pg. 158)
Check Engine Warning Light (pg. 60)
Overdrive Off Indicator (pg. 62)
Anti-Lock Brake Warning Light (pg. 57)
Brake System Light (pg. 56)
Air Bag Readiness Light (pg. 58)
MPH
km/h
P R N D 2 1
NORMAL
BRAKE
CHECK ENGINE
O/D OFF

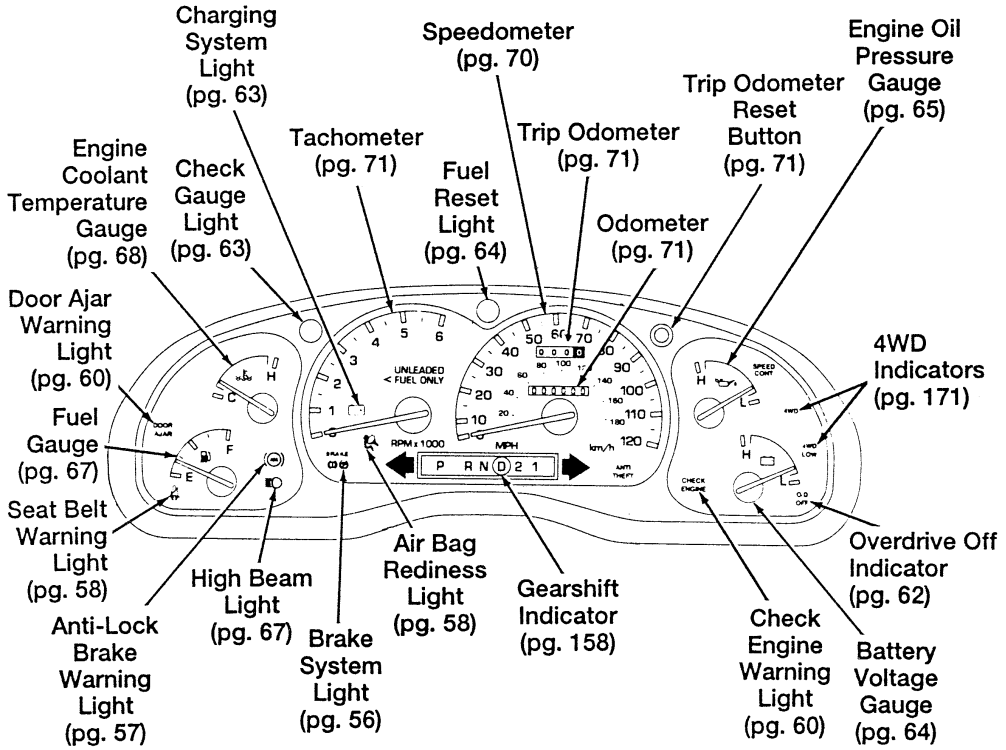

Instrument cluster with tachometer

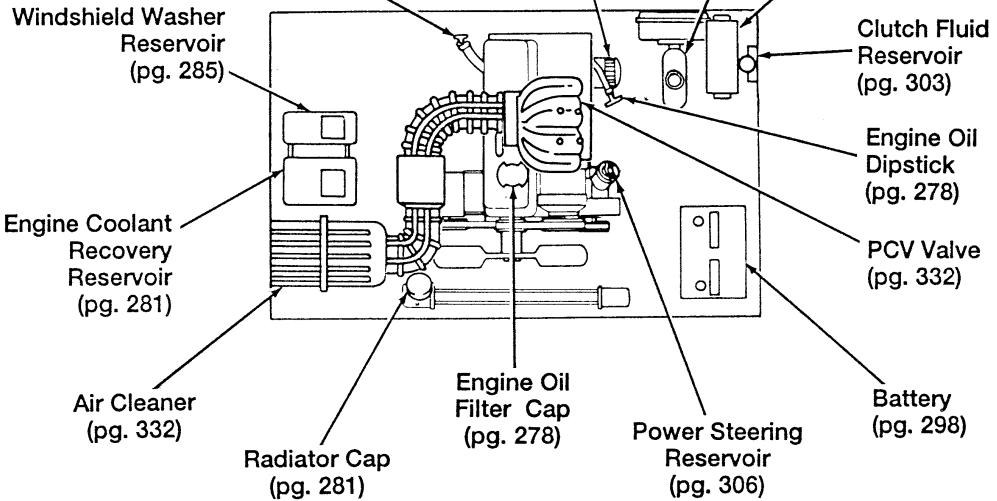

The 2.3L engine compartment

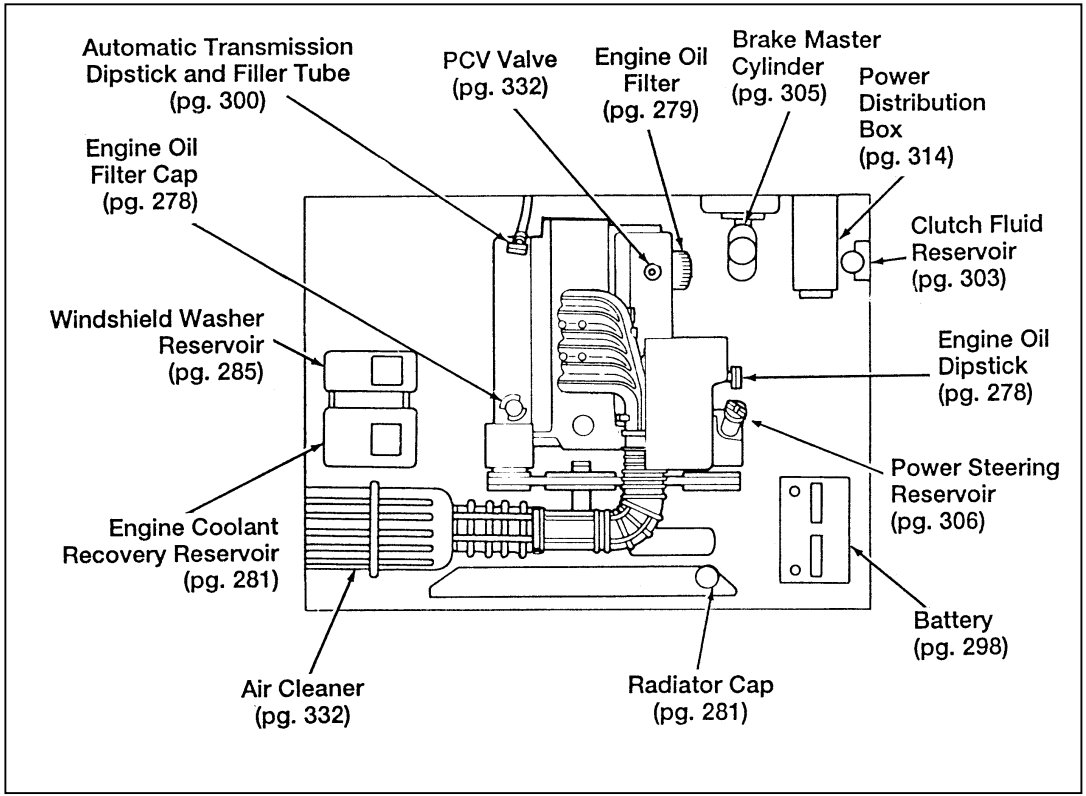

The 3.0L engine compartment

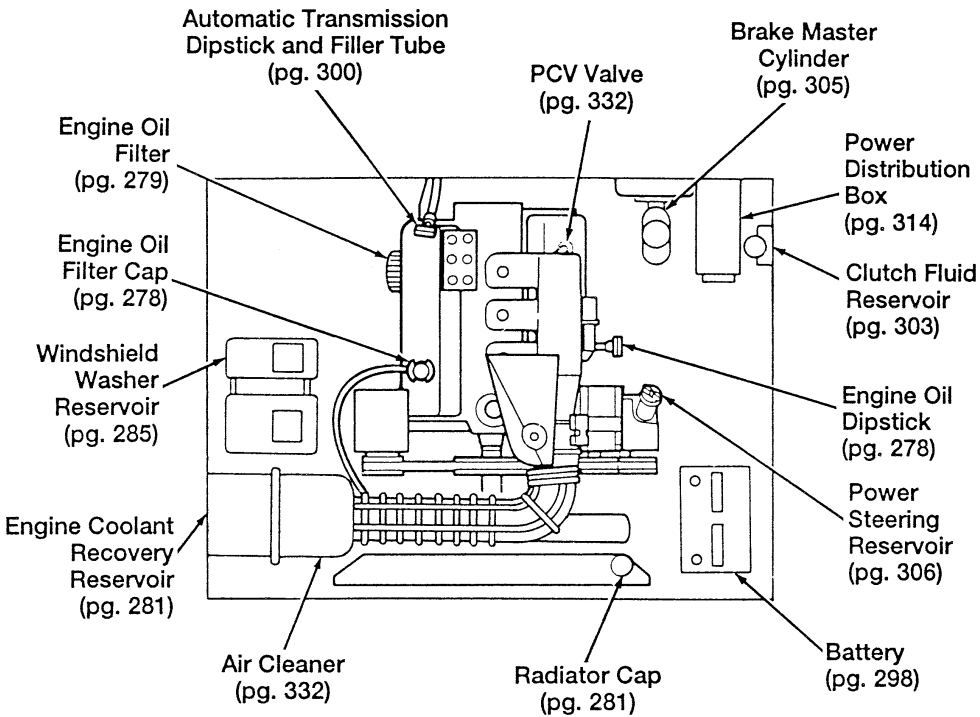

The 4.0L engine compartment

A

Accessory position on the ignition. 41
Accessory power source, power point outlet 126
Additives, engine oil. 275
Air bag supplemental restraint system
and child safety seats 36
description 25, 30
disposal 34
driver air bag. 25, 30
indicator light. 58
operation. 30
passenger air bag 30
proper seating 27
service and information labels 30
tone generator 31, 34
wearing safety belts 26
Air cleaner filter
location 262
specifications 330
Alarm, activating remote personal. 104
Antenna, radio (see Electronic sound system). 127, 152
Antifreeze (see Engine coolant) 278
Anti-lock brake system (ABS)
description 177
noise. 179
see also Brake. 177
Anti-theft system
arming the system. 107
description 107
disarming an untriggered system 108
disarming a triggered system. 108
triggering. 107
Appeals (see Dispute settlement board) 243
Assistance (see Customer assistance). 241

Audio system (see Electronic sound system) 127
Autolamp system (see Headlamps) 82
Automatic transmission
driving an automatic overdrive. 158
fluid, adding 301
fluid, checking 300
fluid, specification. 331
Axle
lubricant specifications. 331
traction lok 186, 289

B

Backing up 157
Basic vehicle warranty 3
Battery
acid, treating emergencies 219, 298
battery saver 107
charging system warning light 62
disconnecting 222
how to service 297
jumping a disabled battery. 219
maintenance-free 297
proper disposal, recycling 298
replacement, specifications 330
servicing 297
voltage gauge 62, 64
when storing your vehicle 336
Brake fluid
brake warning light 56
checking and adding 304
description 304
specifications 331
Brakes
adjustment 177
anti-lock 177
applying the brakes 182
brake warning light 56

Brakes (continued)
fluid, checking and adding 304
fluid, refill capacities 304
fluid, specifications 331
front disc 177
if brakes do not grip well 181
master cylinder 304
new brake linings 5
noise 177, 181
parking 182
power braking 177
rear anti-lock 178
servicing 181, 304
stopping distances 182, 184
trailer 214
when storing your vehicle 336
Brake-shift interlock 157
Break-in period 5
Brights (high beams) 67, 88
Bulbs, replacing 317
halogen 318
headlamps 318

C

Canada, customer assistance 248
Canada, warranty information 3
Carbon monoxide in exhaust 50
Car seats for children (see Child safety seats) 36
Cassette tape player (see Electronic sound system) . . 133, 149
Catalytic converter 323
Chains, tires 295
Changing a tire 223
Charging system gauge 64
Charging system warning light 62
Child safety restraints
child safety belts 39
child safety seats 36

Child safety seats
and air bags 36
attaching with tether straps 38
automatic locking mode (retractor) 13, 36
in front seat 36
in rear outboard seat 36
in rear seat 36
tether anchorage hardware. 38
Chime
headlamps on 67
key in ignition 42
safety belt 57
Circuit breakers, see also fuses 308
Cleaning your vehicle
chrome and aluminum parts 6
engine compartment. 266
exterior 6
exterior lamps 82
fabric 121
headlamps 82
instrument panel 7, 74
interior. 121
interior lamps 84
mirrors. 122
plastic parts 7
polishing 6
rustproofing 6
safety belts 25
tail lamps 82
upholstery and interior trim 121
washing 6
waxing. 6
wheels 296
Climate control system. 74
Clock. 136, 151

Clutch
adjusting 302
fluid 302
fluid reservoir 302
operation while driving 161
recommended shift speeds 164
shifting the gears 162
specifications 331
Cold engine starting 46
Combination lap and shoulder belts 9, 11
Controls
instrument panel 73
mirrors 122
power seat 120
steering column 87
Convenience kit in cargo area. 225
Coolant (see Engine coolant)
checking and adding 278
drain and flush 282
preparing for storage 335
refill capacities 283
specifications 331
temperature gauge 68
warnings 278
Cooling fan 258
Crankcase emission filter 330
Cruise control (see Speed control) 93
Customer Assistance Centre, Ford of Canada. 248

D

Dashboard (see Instrument panel) 73
Daytime running light system 82
Defects, reporting 247
Defrost, windshield 77, 80
Dipstick
  automatic transmission fluid 299, 301
  engine oil 276
  power steering fluid 305
Disabled vehicle (see Towing) 234
Dispute Settlement Board 243
Doors 99
  lubricant specifications 331
Driveline universal joint and slip yoke 303
Driving under special conditions
  bad weather 185
  heavy load 188
  high speed 185
  high water 187
  slippery roads 185
  tips for safe driving 184
  towing a trailer 191

E

Electrical system
  fuses 308, 314
  operating when the engine is off 41
  power point outlet 126
  relays 315
Electronic sound system
  accessory delay 41
  radio reception 152
  tuning the radio 130, 146
  warranty and service information 154
Electronic stereo cassette radio (see Electronic
    sound system) 129
Electronic stereo radio (see Electronic sound system) . . . 129

Emergencies, roadside
assistance 241
battery acid spills 219, 299
fuel 271
jump-starting 219
towing 234
Emergency brake (parking brake) 181
Emission control system 323
catalytic converter 323
emissions warranty 3, 323
Engine
check engine warning light 60
does not start 46, 48
fuel injected engine, starting 44
fuel pump shut-off switch 48
preparing to start 44
service points 262
starting 41, 45
starting after a collision 48
storing your vehicle 334
Engine block heater 47
Engine coolant
checking and adding 278
checking hoses 282
disposal 258, 278, 301
drain and flush 282
preparing for storage 335
recovery reservoir 262
refill procedure 283
specifications 331
temperature gauge 68
Engine coolant temperature gauge
description 68
mechanical 68
Engine fan 258

Engine idle speed control 47
Engine oil
  changing oil and oil filter 276
  checking and adding 276
  dipstick 276
  disposal 258, 278, 301
  engine oil pressure gauge 65
  filter, specifications 330
  specifications 275, 331
  synthetic oil 275
  “break-in” oils 5
  viscosity 275
Entry system
  illuminated 106
  remote 103
Exhaust fumes 50
Extended Service Plan, Ford 4

F

Fan, engine fan, avoiding injury 258
Federal Communications Commission 154
Flashers, hazard 90
Flashing the lamps 88
Flat tire 223
Foglamps 81
Ford Dispute Settlement Board 243
Ford Extended Service Plan 4
Ford Motor Company of Canada 248
Ford of Canada Customer Assistance Centre 248
Foreign registration 249
Four-Wheel Drive vehicles
  description 167
  driving off road. 174
  lever operated 167
  special driving instructions. 176
  special notice 4
Four-wheeling with Ford supplement 4
French owner guides, how to obtain 3

Fuel
calculating fuel economy 273
choosing the right fuel 269
comparisons with EPA fuel economy estimates 274
filling your vehicle with fuel 266
filter, specifications 330
fuel filler door release lever 266
fuel gauge 67
improving fuel economy 274
octane rating 269
quality 269
running out of fuel 273
safety information relating to automotive fuels 271
storing your vehicle 335
treating emergencies 271
Fuel cap
removing 266
replacing 266, 268
Fuel filler door
override, manual 267
remote release 266
Fuel filter, specifications 330
Fuel gauge 67
Fuel pump shut-off switch
engine does not start 48
starting after a collision 48
Fuse panels 308
instrument panel 314
power distribution box 313
Fuses
charts 308, 314
checking and replacing 314

G

Gas cap (see Fuel cap) 266
Gas mileage (see Fuel economy) 269, 273
Gasoline (see Fuel) 266
Gauges, Electronic
  engine coolant temperature gauge 68
  fuel gauge 67
  odometer. 70
  speedometer 70
Gauges, Mechanical
  battery voltage gauge 64
  charging system gauge 64
  engine coolant temperature gauge 68
  engine oil pressure gauge 65
  fuel gauge 67
  odometer. 70
  speedometer 70
  tachometer 71
  trip odometer. 71
GAWR (Gross Axle Weight Rating)
  calculating 198
  definition. 188, 196
  driving with a heavy load 188
  location 188, 196
Gearshift
  automatic operation 156
  column-mounted 156
  floor-mounted 162
  gearshift override 157
  locking the gearshift. 41
  positions 156, 162
  shifting the gears 156, 162
  shift-lock 157

GVWR (Gross Vehicle Weight Rating)
calculating 198
definition 188, 196
driving with a heavy load 188
location 196

H

Hazard flashers 90
Headlamps
aiming 317
checking alignment 317
cleaning 82
daytime running lights. 82
flashing 88
high beam 88
replacing bulbs 317
turning on and off 80
warning chime 67
Head restraints 112
High beams 88
indicator light. 67
operation 80, 88
Hitch 213
Hood
latch location 260
lubrication specifications 331
release lever 260
working under the hood 258
Horn 92
Hoses, checking 282

I

Identification Number, Vehicle (VIN) 242
Idle
  relearning 222, 258, 298
  speed 47
Ignition
  chime 42
  positions of the ignition 41
  removing the key 43
Indicator lights and chimes (see Lights) 53
Infant seats (see Safety seats) 34, 36
Instrument cluster 53
  mechanical 56
Instrument panel
  lighting up panel and interior 83
  location of components 73
  registers 74
Interval wipers 88

J

Jack
  operation. 227, 229
  positioning 227, 229
  storage. 225
Jump-starting your vehicle
  attaching cables. 221
  disconnecting cables. 222

K

Keys
  key in ignition chime 42
  positions of the ignition 41
  removing from the ignition 43
  stuck in lock position 41

L

Lamps
checking 317
combination cargo and brakelamp 84
daytime running light system 82
flashing the lamps. 88
fog lamps 81
hazard flashers 90
headlamps 80
high beams 88
illuminated entry system. 106
instrument panel, dimming. 83
interior lamps. 80, 83
replacing bulbs 317
trailer 215
Lane change indicator (see Turn signal) 87
Lights, warning and indicator
air bag 58
brake 56
charging system. 62
check engine 60
engine oil pressure 65
hazard warning light 90
high beam 67
oil pressure. 65
overdrive off 62
safety belt 57
service engine soon 60
turn signal indicator. 87
Load limits
GAWR 188
GVWR 188
trailer towing 192
Lubricant specifications. 331
Lug nuts
standard 229
tightening sequence 227

M

Maintenance schedule and record (see separate Maintenance Schedule and Record booklet) 3
Maintenance (see Servicing) 257
Manual transmission
clutch 161, 302
fluid, checking and adding. 302
lubricant specifications. 331
shifting gears 162
shift speeds. 164
Master cylinder, brakes 304
Methanol in fuel 271
Mileage, calculating fuel economy. 273
Mirrors
dual electric remote control 122
rearview 122
side view mirrors 122
side view mirrors (power) 122
Motorcraft parts. 330

N

National Highway Traffic Safety Administration 247
New vehicle break-in 5

O

Octane rating 269
Odometer
description 70
trip odometer. 71
Off road driving, 4-wheel drive. 174
Oil filter 277, 330
Oil (see Engine oil) 275
Oil viscosity 275

On-board diagnostic (OBD II) system 325
Overdrive. 158
Overseas offices 249

P

Panic alarm feature, remote entry system 104
Parking brake
  operation 182
  warning light 56
Parts (see Motorcraft Parts) 330
PCV valve, specifications 330
Power distribution box (see Fuses) 313
Power door locks 102
Power features
  door locks 102
  mirrors 122
  seats 120
  windows 109, 111
Power point electrical outlet 126
Power steering
  dipstick 305
  driving with power steering 166
  fluid, checking and adding 305
  fluid, specifications 331
  servicing 166
Prop rod, hood 260

R

Radio (see Electronic sound systems) 127
Rear anti-lock brakes. 178
  description 178
Rear axle
  lubricant specification 331
  traction lok 186, 289
Rear window 109
  washer reservoir 283

Regulations, National Highway Traffic
Safety Administration. 247
Relays 315
Remote entry system
arming and disarming the anti-theft system 104
illuminated entry 106
locking/unlocking doors. 103
panic alarm 104
replacement/additional transmitters. 106
replacing the batteries 105
Reporting safety defects 247
Restraints, safety (see Safety restraints)
adult. 9
child. 34
head. 112
infant 34, 36
Roadside assistance 241
Roadside emergencies 219
Rotating the tires 289

S

Safe driving tips. 184
Safety belts (see Safety restraints) 9
Safety chains, when towing a trailer. 214
Safety defects, reporting 247
Safety information relating to automotive fuels. 271
Safety restraints
adjusting the safety belts 11, 14, 21
automatic locking mode (retractor) 13
cleaning the safety belts 25
extension assembly 23
for adults 9
for children. 34
for infants 34, 36
for pregnant women 9
head. 112
lap and shoulder belts. 9, 11

Safety restraints (continued)
maintenance 23
proper use 9
replacement. 23, 25
warning light and chime. 57
Safety seats for children
and air bags 36
attaching with tether straps 38
automatic locking mode (retractor) 13, 36
in front seat 36
in rear outboard 36
in rear seat 36
tether anchorage hardware 38
Seat belts (see Safety restraints) 9
Seats
adjusting the seat, manual 112
adjusting the seats, power 120
child safety seats 36
cleaning upholstery 121
head restraints 112
reclining the seat 112
seatback release 112
Serial number (VIN) 242
Service concerns 242
Servicing your vehicle 257
precautions when servicing. 258
servicing when you tow 234
Shift-lock system 157
Shift positions (see Gearshift) 156, 162
Shoulder and lap belts (see Safety restraints) 9, 11
Shoulder belts (see Safety restraints). 11, 14
Side mirrors. 122
adjusting 122
Snowplowing 218
Snow tires and chains 295
Spare tire 223

Spare tire (continued)
changing the tire 223, 227
conventional spare 223, 225
finding the spare 225
removing the spare tire 225
storing the flat tire 225, 229
temporary spare 223
Spark plugs, specifications 330
Special driving conditions 184
Special notice
E-4WD vehicles 4
four wheel drive vehicles 4
Specification chart, lubricants 331
Speed control
accelerating. 96
canceling a set speed 98
resetting 96
resuming a set speed 98
tap up/tap down 96
when towing a trailer 215
Speedometer 70
Starting your vehicle
preparing to start your vehicle 44
starting a cold engine 46
starting after a collision 48
starting a warm engine 46
starting your vehicle if the battery is disabled 219
Steering, power 166
Steering wheel
horn 92
locking. 41
speed controls 93
tilting 92
Storing your vehicle 334
Supplemental air bag readiness light 58
Supplemental Restraint System (SRS) 25

T

Tailgate 100
Tail lamps
bulb replacement 317
cleaning 82
Temperature control (see Climate control) 74
Tether anchor installation (see Child restraints) 38
Tilt steering wheel 92
Tires
changing 223
checking the pressure 287
cleaning 296
inspection and maintenance 287
replacing 291
rotating 289
snow tires and chains 295
spare tire 223, 225
storing your vehicle 336
tire grades 291
treadwear 291
wear bands 291
wheel and tire matching 295
Towing a trailer (see Trailer towing) 191
Towing your vehicle
using wheel dollies 234
with a tow truck 234
Traction control 186, 289
Traction-lok rear axle 186, 289
Trailer Towing 191
Trailer towing
calculating maximum trailer weight 198
safety chains 214
trailer brakes 214
trailer lamps 215

Transfer case
fluid checking 302
lever operated 167
Transmission
automatic operation 156
fluid, checking and adding (automatic) 300
fluid, checking and adding (manual) 302
lubricant specifications. 331
Transmission control switch 158
Transmitter (see Remote entry) 103
Trip odometer 71
Tune-up specifications (VECI) 325
Turn signal
indicator lights 87
lever. 87

U

Used engine oil, disposal. 258, 278, 301

V

Variable interval wipers 88
VECI (Vehicle Emission Control Information) decal 325
Vehicle Identification Number (VIN) 242
Vehicle loading 192
calculating the load 198
understanding loading information 188
Vehicle storage 334
Ventilating your vehicle (see Climate control) 74
Viscosity (see Engine oil). 275
Voltmeter (see Battery voltage gauge) 62, 64

W

Warm engine, starting 46
Warning chimes
headlamps on. 67
key in ignition 42
safety belt 57
Warning lights (see Lights) 53
Warranties
basic 3
Canada. 3
radio. 154
Warranty Information Booklet 3
Washer fluid
rear window reservoir 283
reservoir 283
windshield 283
Weight limits (GAWR, GVWR) 188
Wheel and tire matching 295
Wheel bearings, lubricant specifications 331
Wheel dollies (see Towing) 234
Wheels
cleaning 296
covers 227, 229
inspection and maintenance 287
lug nuts 227
replacement. 295
Windows
manual windows, operating 109
one-touch down. 111
power windows, operating 109, 111

Windshield
defrosting 77, 80
washing 88
Windshield washer fluid and wipers
checking and adding fluid 283
checking and replacing wiper blades 285
liftgate reservoir 283
operation. 88
reservoir 283
specifications 284, 331
variable interval wipers 88
Wrecker towing 234

Engine	2.3L	3.0L	4.0L
Fuel	Unleaded only — 87 Octane		
Fuel tank capacity: Regular Cab Standard Optional SuperCab	16.5 gals. (62.4L) 20.0 gals. (75.7L) 20.0 gals. (75.7L)		
Tire size	See Safety Compliance Certification Label		
Tire pressure	See Safety Compliance Certification Label		
Hood release	Pull lever located below steering column		
Engine oil	Use only oil displaying the American Petroleum Certification Mark SAE 5W-30 preferred		
Engine oil capacity w/ filter	5.0 qts. (4.7L)	4.5 qts. (4.3L)	5.0 qts. (4.7L)
Automatic transmission fluid	Motorcraft Mercon® (ATF)		
Automatic transmission fluid capacity: 4x2 4x4	9.7 qts. (9.2L) 10 qts. (9.5L)		
Power steering fluid	Use only power steering fluid that meets Ford specification Mercon® ATF		
Engine coolant capacity: with A/C without A/C	7.2 qts. (6.8L) 6.5 qts. (6.2L)	10.2 qts. (9.6L) 9.5 qts. (9.0L)	8.6 qts. (8.1L) 7.8 qts. (7.4L)