FOREWORD

Welcome to the growing family of new NISSAN owners. This vehicle is delivered to you with confidence. It was produced using the latest techniques and strict quality control.

This manual was prepared to help you understand the operation and maintenance of your vehicle so that you may enjoy many miles (kilometers) of driving pleasure. Please read through this manual before operating your vehicle.

A separate Warranty Information Booklet explains details about the warranties covering your vehicle. The "NISSAN Service and Maintenance Guide" explains details about maintaining and servicing your vehicle. Additionally, a separate Customer Care/Lemon Law Booklet (U.S. only) will explain how to resolve any concerns you may have with your vehicle, as well as clarify your rights under your state's lemon law.

Your NISSAN dealership knows your vehicle best. When you require any service or have any questions, they will be glad to assist you with the extensive resources available to them.

READ FIRST—THEN DRIVE SAFELY

Before driving your vehicle please read this Owner's Manual carefully. This will ensure familiarity with controls and maintenance requirements, assisting you in the safe operation of your vehicle.

⚠ WARNING

IMPORTANT SAFETY INFORMATION REMINDERS FOR SAFETY!

Follow these important driving rules to help ensure a safe and comfortable trip for you and your passengers!

- **NEVER drive under the influence of alcohol or drugs.**
- **ALWAYS observe posted speed limits and never drive too fast for conditions.**
- **ALWAYS use your seat belts and appropriate child restraint systems. Pre-teen children should be seated in the rear seat.**
- **ALWAYS provide information about the proper use of vehicle safety features to all occupants of the vehicle.**
- **ALWAYS review this owner's manual for important safety information.**

For descriptions specified for four-wheel drive models, a 4x4 mark is placed at the beginning of the applicable sections/items.

As with other vehicles with features for off-road use, failure to operate four-wheel drive models correctly may result in loss of control or an accident. Be sure to read "Driving safety precautions" in the "Starting and driving" section of this manual.

ON-PAVEMENT AND OFF-ROAD DRIVING

This vehicle will handle and maneuver differently from an ordinary passenger car because it has a higher center of gravity for off-road use. As with other vehicles with features of this type, failure to operate this vehicle correctly may result in loss of control or an accident.

Be sure to read "On-pavement and off-road driving precautions", and "Avoiding collision and rollover", and "Driving safety precautions", in the "Starting and driving" section of this manual.

MODIFICATION OF YOUR VEHICLE

This vehicle should not be modified. Modification could affect its performance, safety or durability, and may even violate governmental regulations. In addition, damage or performance problems resulting from modifications may not be covered under NISSAN warranties.

WHEN READING THE MANUAL

This manual includes information for all options available on this model. Therefore, you may find some information that does not apply to your vehicle.

All information, specifications and illustrations in this manual are those in effect at the time of printing. NISSAN reserves the right to change specifications or design without notice and without obligation.

IMPORTANT INFORMATION ABOUT THIS MANUAL

You will see various symbols in this manual. They are used in the following ways:

⚠ WARNING

This is used to indicate the presence of a hazard that could cause death or serious personal injury. To avoid or reduce the risk, the procedures must be followed precisely.

⚠ CAUTION

This is used to indicate the presence of a hazard that could cause minor or moderate personal injury or damage to your vehicle. To avoid or reduce the risk, the procedures must be followed carefully.

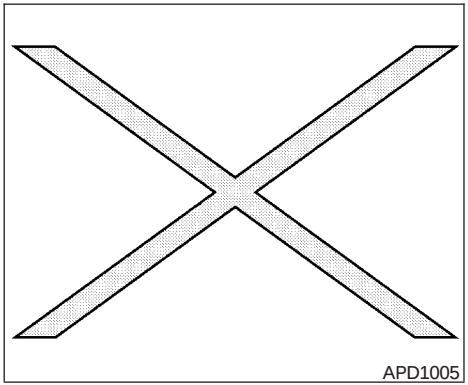

If you see this symbol, it means **"Do not do this"** or **"Do not let this happen."**

If you see a symbol similar to these in an illustration, it means the arrow points to the front of the vehicle.

Arrows in an illustration that are similar to these indicate movement or action.

Arrows in an illustration that are similar to these call attention to an item in the illustration.

CALIFORNIA PROPOSITION 65 WARNING

⚠ WARNING

Engine exhaust, some of its constituents, and certain vehicle components contain or emit chemicals known to the State of California to cause cancer and birth defects or other reproductive harm. In addition, certain fluids contained in vehicles and certain products of component wear contain or emit chemicals known to the State of California to cause cancer and birth defects or other reproductive harm.

© 2004 NISSAN NORTH AMERICA, INC.
GARDENA, CALIFORNIA

All rights reserved. No part of this Owner's Manual may be reproduced or stored in a retrieval system, or transmitted in any form, or by any means, electronic, mechanical, photocopying, recording or otherwise, without the prior written permission of Nissan North America, Inc., Gardena, California.

WELCOME TO THE WORLD OF NISSAN

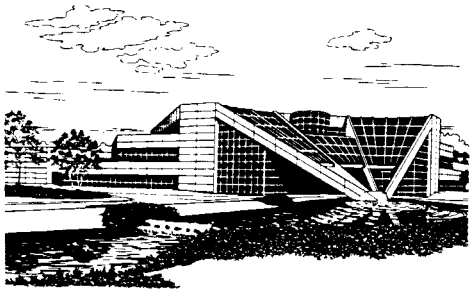

NISSAN TECHNICAL CENTER NORTH AMERICA, INC.
in Farmington Hills, Michigan

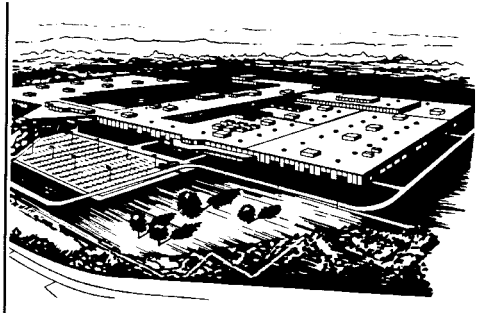

NISSAN MANUFACTURING FACILITY
in Smyrna, Tennessee

WFW0002

Your new NISSAN is the result of our dedication to produce the finest in safe, reliable and economical transportation. Your vehicle is the product of a successful worldwide company that manufactures cars and trucks in over 17 countries and distributes them in 170 nations.

NISSAN vehicles are designed and manufactured by Nissan Motor Co., Ltd. which was founded in Tokyo, Japan in 1933, and NISSAN affiliates worldwide, collectively growing to become the fifth largest automaker in the world. In addition to cars and trucks, NISSAN also makes forklift trucks, marine engines, boats and other diversified products.

NISSAN has made a substantial and growing investment in North America. NISSAN's commitment is over $6 billion dollars in capital investments in facilities across the continent. Some of the facilities include the Nissan Manufacturing facilities in Canton, Mississippi and in Smyrna, Tennessee, vehicle styling design at Nissan Design America, Inc. in San Diego, California, and engineering at Nissan Technical Center North America in Farmington Hills, Michigan. Additionally, NISSAN employs more than 21,000 people throughout the United States, Canada, and Mexico. An additional 60,000 people work for the 1,250 NISSAN and INFINITI dealers across North America.

NISSAN is also a substantial contributor to the Canadian economy. Nissan Canada Inc., its suppliers and over 150 dealers employ approximately 4,500 people. These include company employees and the staffs of NISSAN dealers all across Canada. In addition, many Canadians work for companies that supply NISSAN and NISSAN dealers with materials and services ranging from the operation of port facilities and transportation services, to the supply of lubricants, parts and accessories.

NISSAN pioneered the use of electronics and computers in automobiles, and has led the industry in improving both performance and fuel efficiency through new engine designs and the use of synthetic materials to reduce vehicle weight. The company has also developed ways to build quality into its vehicles at each stage of the production process, both through extensive use of automation and — most importantly — through an awareness that **people** are the central element in quality control.

From the time the parts arrived from our suppliers until you took delivery of your new NISSAN, dozens of checks were made to ensure that only the best job was being done in producing and delivering your vehicle. NISSAN also takes great care to ensure that when you take your NISSAN to your dealer for maintenance, the service technician will perform his work according to the quality standards that have been established by NISSAN.

Safety has also been built into your NISSAN. As you know, seat belts are an integral part of the safety systems that will help protect you and your passengers in the event of a sudden stop or an accident. We urge you to use the seat belts every time you drive the vehicle.

The NISSAN story of growth and achievement reflects our major goal: to provide you, our customer, with a vehicle that is built with quality and craftsmanship — a product that we can be proud to build and you can be proud to own.

NISSAN CUSTOMER CARE PROGRAM

NISSAN CARES . . .

Both NISSAN and your NISSAN dealer are dedicated to serving all your automotive needs. Your satisfaction with your vehicle and your NISSAN dealer are our primary concerns. Your NISSAN dealer is always available to assist you with all your automobile sales and service needs.

However, if there is something that your NISSAN dealer cannot assist you with or you would like to provide NISSAN directly with comments or questions, please contact the NISSAN Consumer Affairs Department using our toll-free number:

For U.S. customers
1-800-NISSAN-1
(1-800-647-7261)

For Canadian customers
1-800-387-0122

The Consumer Affairs Department will ask for the following information:

- Your name, address, and telephone number
- Vehicle identification number (attached to the top of the instrument panel on the driver's side)
- Date of purchase
- Current odometer reading
- Your NISSAN dealer's name
- Your comments or questions

OR

You can write to NISSAN with the information at:

For U.S. customers
Nissan North America, Inc.
Consumer Affairs Department
P.O. Box 191
Gardena, California 90248-0191

For Canadian customers
Nissan Canada Inc.
5290 Orbitor Drive
Mississauga, Ontario L4W 4Z5

We appreciate your interest in NISSAN and thank you for buying a quality NISSAN vehicle.

Table of Contents

Illustrated table of contents	0
Safety—Seats, seat belts and supplemental air bags	1
Instruments and controls	2
Pre-driving checks and adjustments	3
Heater, air conditioner and audio systems	4
Starting and driving	5
In case of emergency	6
Appearance and care	7
Maintenance and do-it-yourself	8
Technical and consumer information	9
Index	10

0 Illustrated table of contents

Airbags, seat belts and child restraints 0-2
Exterior front 0-3
Exterior rear. 0-4
Passenger compartment 0-5
Instrument panel. 0-6
Engine compartment locations 0-7
Warning/indicator lights 0-10

AIRBAGS, SEAT BELTS AND CHILD RESTRAINTS

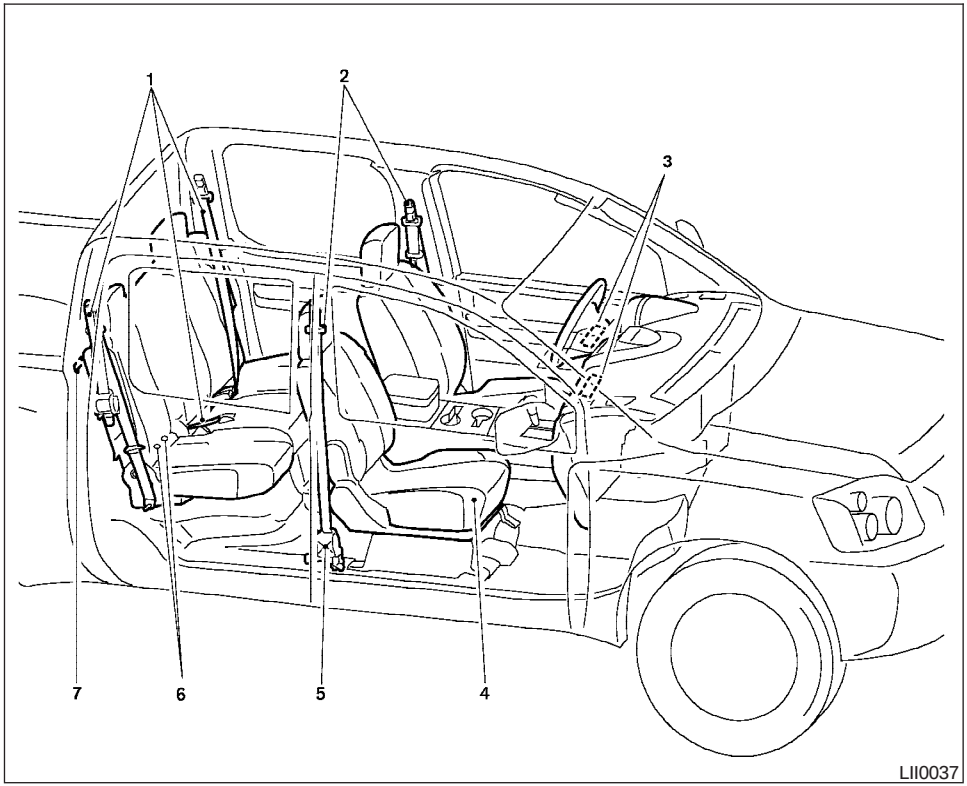

1. 2nd row seat belts (P. 1-20)
2. Front seat belts (P. 1-20)
3. Supplemental front impact air bags (P.1-12)
4. Seats (P. 1-2)
5. Seat belt pretensioners (P. 1-14)
6. LATCH (Lower Anchors and Tethers for CHildren) (P. 1-39)
7. Top tether strap anchor (P. 1-41)

See the page number indicated in parentheses for operating details.

EXTERIOR FRONT

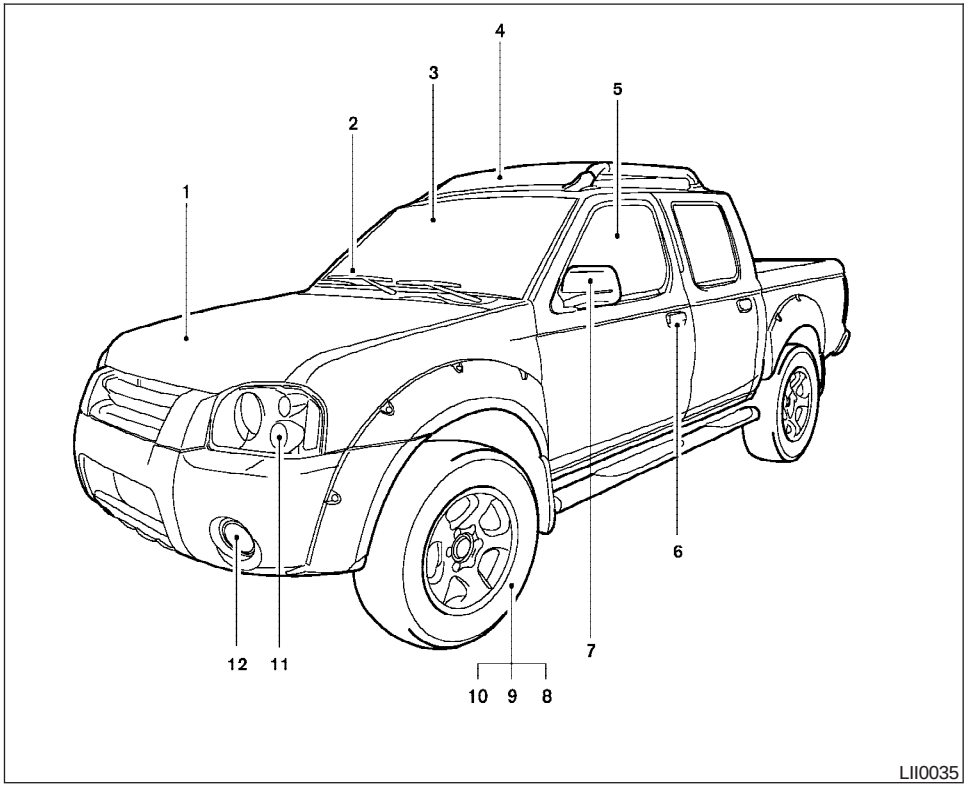

1. Engine hood (P. 8-6)
2. Windshield wiper and washer switch (P. 2-18)
3. Windshield (P. 8-25)
4. Roof rack (P.2-30)
5. Power windows (if so equipped) (P. 2-32)
6. Door locks, keyfob, keys (P. 3-2, 3-4, 3-2)
7. Mirrors (P. 3-13)
8. Tire pressure (P. 8-35)
9. Flat tire (P. 6-2)
10. Tire chains (P. 5-30)
11. Headlight and turn signal switch (P. 2-20); Replacing bulbs (P. 8-30)
12. Fog light switch (if so equipped) (P. 2-22)

See the page number indicated in parentheses for operating details.

EXTERIOR REAR

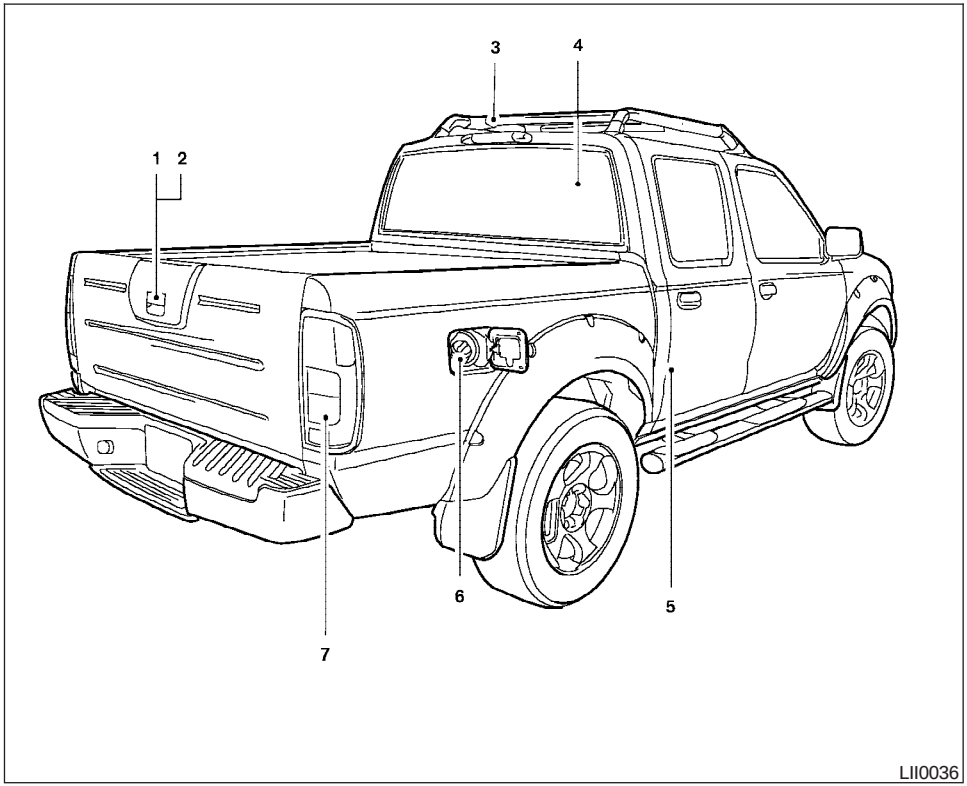

1. Vehicle loading (P. 9-13)
2. Truck box, tailgate (P.3-15)
3. Roof rack (P.2-30)
4. Rear sliding window (if so equipped) (P.2-34)
5. Child safety rear door lock (Crew Cab models only) (P.3-4)
6. Fuel filler cap, fuel recommendation (P. 3-11, P. 9-3)
7. Replacing bulbs (P. 8-30)

See the page number indicated in parentheses for operating details.

PASSENGER COMPARTMENT

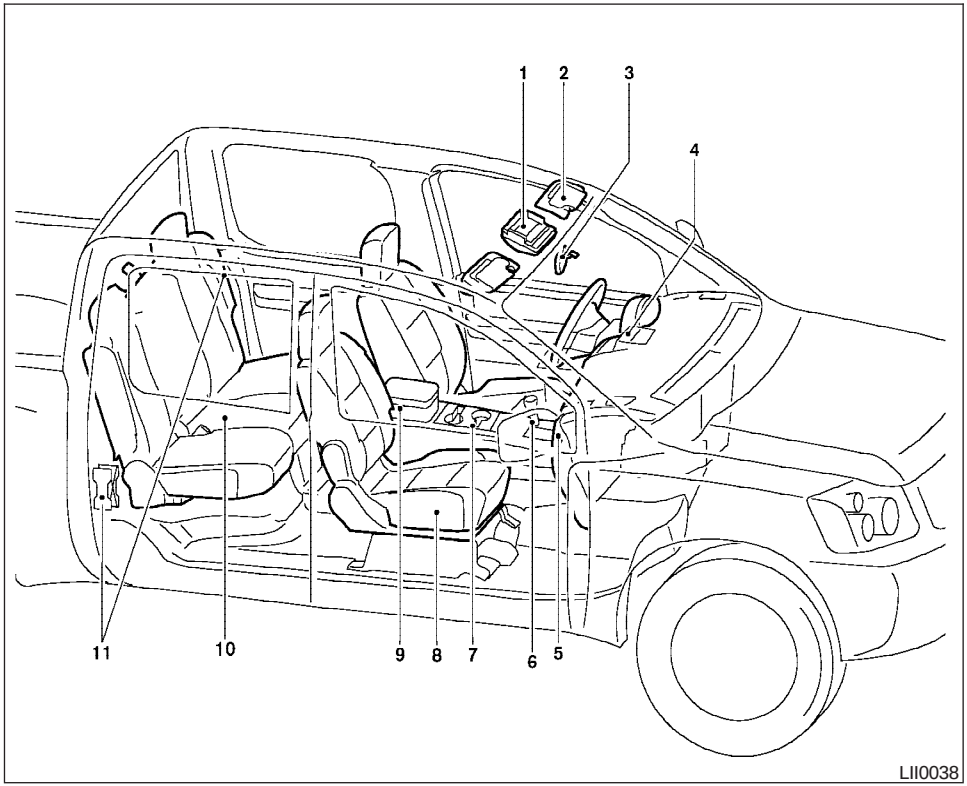

1. Map lights (P. 2-34)
2. Sun visors (P. 3-13)
3. Inside mirror (P. 3-13)
4. Ventilators (P. 4-2)
5. Glove box (P. 2-28)
6. Shift knob (automatic transmission, if so equipped) (P. 5-10)
7. Cup holders (P. 2-27)
8. Front seats (P. 1-2)
9. Console box (P. 2-28)
10. Rear seats (P. 1-5)
11. Flat tire (P. 6-2)

See the page number indicated in parentheses for operating details.

INSTRUMENT PANEL

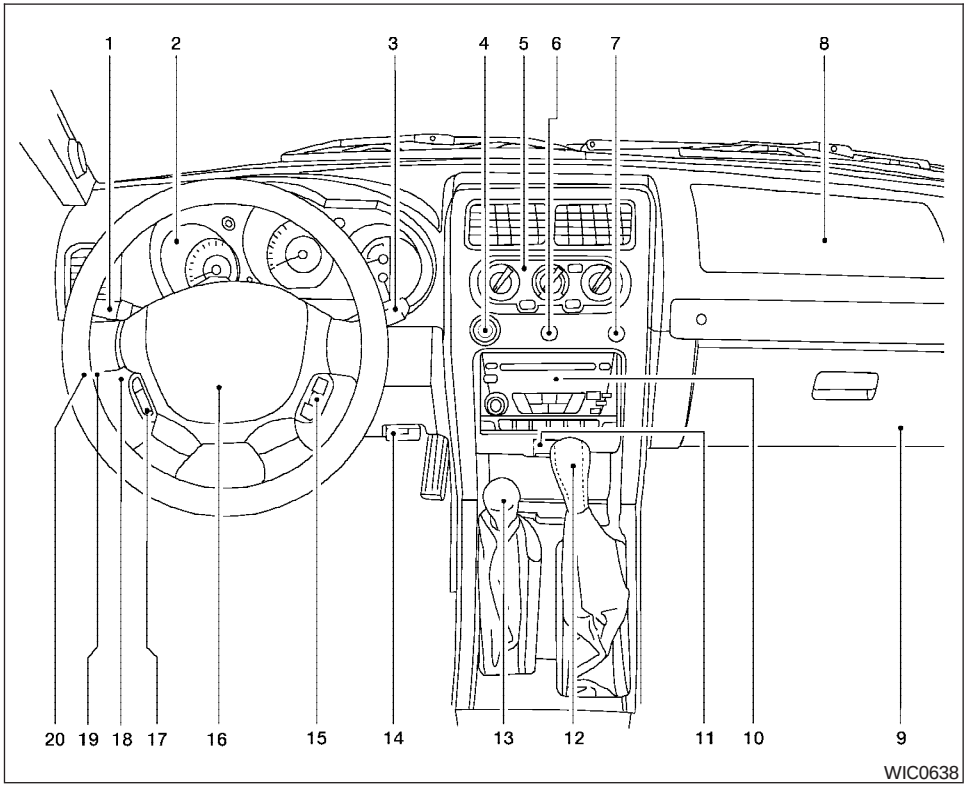

1. Headlight/turn signal switch (P. 2-20)
2. Meters and gauges (P. 2-3)
3. Windshield wiper/washer switch (P. 2-18)
4. Power outlet (P. 2-24)
5. Heater and air conditioner (P. 4-2)
6. Passenger air bag ON/OFF switch light (if so equipped) (P. 1-16)
7. Passenger air bag ON/OFF switch (if so equipped) (P. 1-16)
8. Front passenger supplemental air bag (P. 1-7)
9. Glove box (P. 2-28)
10. Audio system (P. 4-10)
11. Hazard warning flasher switch (P. 2-22)
12. Automatic/manual selector lever (P. 5-10)
13. Transfer case shift lever (if so equipped) (P. 5-21)
14. Parking brake release lever (P. 5-18)
15. Cruise control main/set switch (if so equipped) (P. 5-19)
16. Driver supplemental air bag/horn (P. 1-7, P. 2-23)
17. Steering wheel switch for audio controls (if so equipped) (P. 4-28)
18. Vehicle dynamic control (VDC) off switch (if so equipped) (P. 2-24)
19. Instrument brightness control (P. 2-21)
20. Cargo lamp switch (P. 2-23)

See the page number indicated in parentheses for operating details.

ENGINE COMPARTMENT LOCATIONS

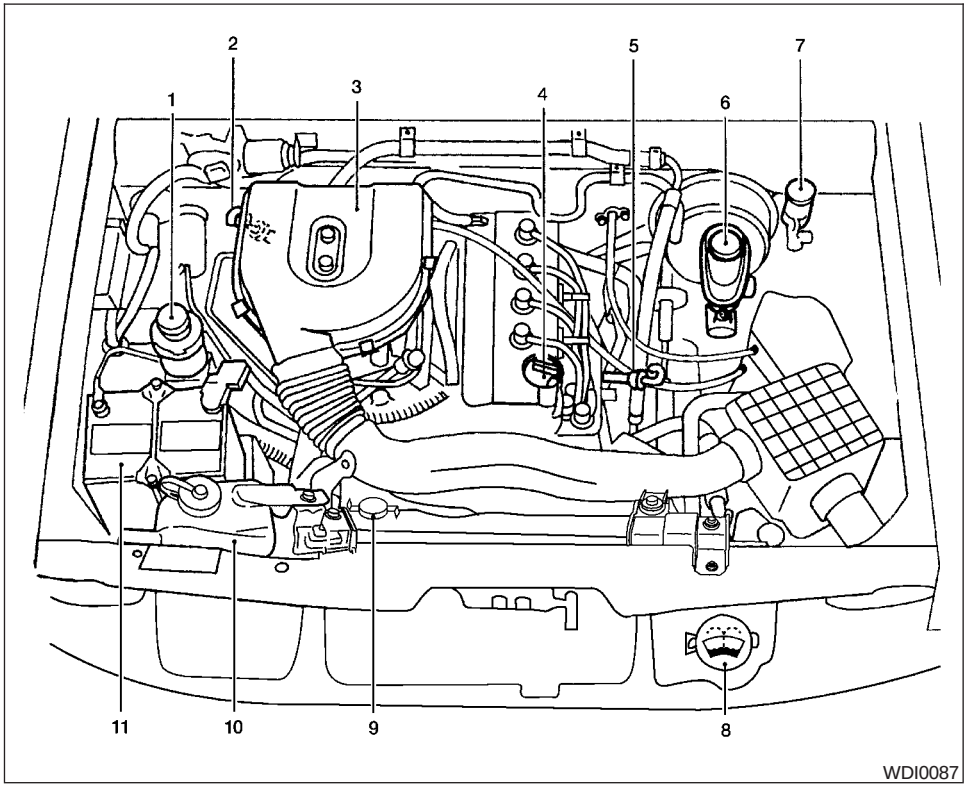

KA24DE engine

1. Power steering fluid reservoir (P. 8-15)
2. Automatic transmission fluid dipstick (A/T model) (P. 8-14)
3. Air cleaner (P. 8-22)
4. Engine oil filler cap (P. 8-10)
5. Engine oil dipstick (P. 8-10)
6. Brake fluid reservoir (P. 8-16)
7. Clutch fluid reservoir (M/T model) (P.8-16)
8. Windshield washer fluid reservoir (P. 8-17)
9. Radiator cap (P. 8-9)
10. Engine coolant reservoir (P. 8-9)
11. Battery (P. 8-17)

See the page number indicated in parentheses for operating details.

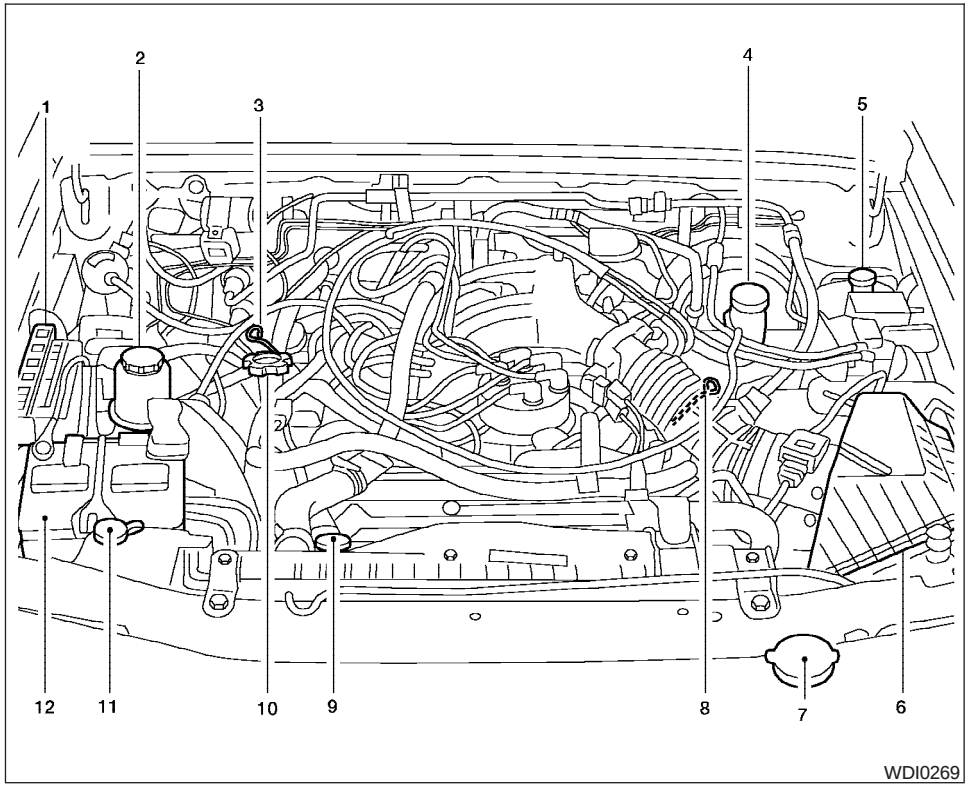

VG33E engine

1. Fuse/fusible link holder (P. 8-28)
2. Power steering fluid reservoir (P. 8-15)
3. Automatic transmission fluid dipstick (A/T model) (P. 8-14)
4. Brake fluid reservoir (P. 8-16)
5. Clutch fluid reservoir (M/T model) (P.8-16)
6. Air cleaner (P. 8-22)
7. Windshield washer fluid reservoir (P. 8-17)
8. Engine oil dipstick (P. 8-10)
9. Radiator cap (P. 8-9)
10. Engine oil filler cap (P. 8-10)
11. Engine coolant reservoir (P. 8-9)
12. Battery (P. 8-17)

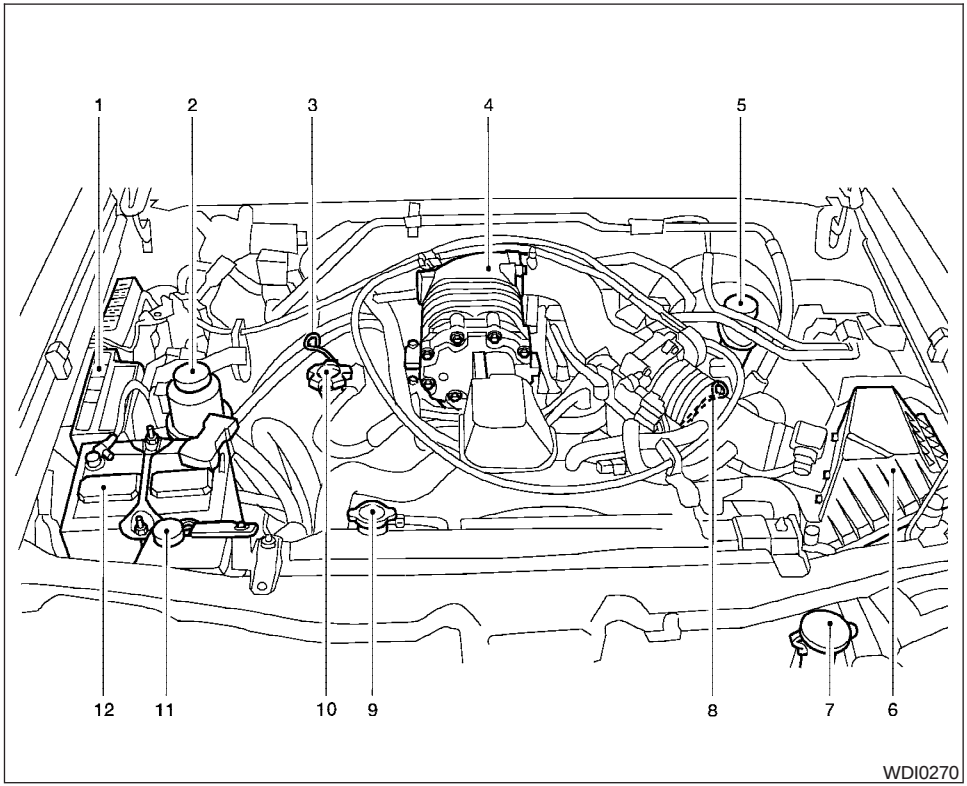

VG33ER engine

1. Fuse/fusible link holder (P. 8-28)
2. Power steering fluid reservoir (P. 8-15)
3. Automatic transmission fluid dipstick (A/T model) (P. 8-14)
4. Supercharger
5. Brake fluid reservoir (P. 8-16)
6. Air cleaner (P. 8-22)
7. Windshield washer fluid reservoir (P. 8-17)
8. Engine oil dipstick (P. 8-10)
9. Radiator cap (P. 8-9)
10. Engine oil filler cap (P. 8-10)
11. Engine coolant reservoir (P. 8-9)
12. Battery (P. 8-17)

WARNING/INDICATOR LIGHTS

Warning light	Name	Page
ABS or	Anti-lock brake warning light	2-10
A/T OIL TEMP	Automatic transmission oil temperature warning light (4x4 model)	2-10
ATP	Automatic transmission park warning light (4x4 model)	2-10
BRAKE or	Brake warning light	2-10

Warning light	Name	Page
	Charge warning light	2-11
	Door open warning light	2-11
	Engine oil pressure warning light	2-11
	Low fuel warning light	2-11
	Low tire pressure warning light (if so equipped)	2-11
	Low windshield washer fluid warning light (if so equipped)	2-12

Warning light	Name	Page
OFF	Passenger supplemental air bag OFF indicator light (except Crew Cab models)	2-12
	Seat belt warning light and chime	2-13
	Supplemental air bag warning light	2-13

Indicator light	Name	Page
CRUISE	CRUISE main switch indicator light (if so equipped)	2-13
SET	Cruise SET switch indicator light (if so equipped)	2-13
	4–wheel drive indicator light (if so equipped)	2-14
	High beam indicator light (Blue)	2-14
SERVICE ENGINE SOON	Malfunction indicator lamp (MIL)	2-14

Indicator light	Name	Page
O/D OFF	Overdrive off indicator light (automatic transmission only)	2-15
SLIP	Slip indicator light (if so equipped)	2-15
	Turn signal/hazard indicator lights	2-15
VDC OFF	Vehicle dynamic control off indicator light (if so equipped)	2-15

MEMO

1 Safety—Seats, seat belts and supplemental air bags

Seats 1-1
Front manual seat adjustment 1-1
Tilting rear bench seat (Crew Cab models only) 1-5
Jump seat (if so equipped). 1-6
Head restraint adjustment 1-6
Supplemental restraint system 1-7
Precautions on supplemental restraint system 1-7
Passenger supplemental air bag on/off switch and light (except Crew Cab models) 1-16
Supplemental air bag warning labels. 1-18
Supplemental air bag warning light 1-18
Seat belts 1-20
Precautions on seat belt usage. 1-20
Child safety. 1-22
Pregnant women 1-24
Injured persons. 1-24
Three-point type seat belt with retractor. 1-24
Two-point type seat belt without retractor (jump seat in King Cab models and center of rear seat in Crew Cab models). 1-27
Seat belt extenders 1-29
Seat belt maintenance 1-29
Child restraints. 1-30
Precautions on child restraints 1-30
Installation on rear bench seat center position (Crew Cab models only). 1-32
Installation on rear bench seat outboard positions (Crew Cab models only). 1-35
LATCH (Lower Anchors and Tethers for CHildren) system. 1-39
Top tether strap child restraint 1-41
Installation on front passenger seat 1-43

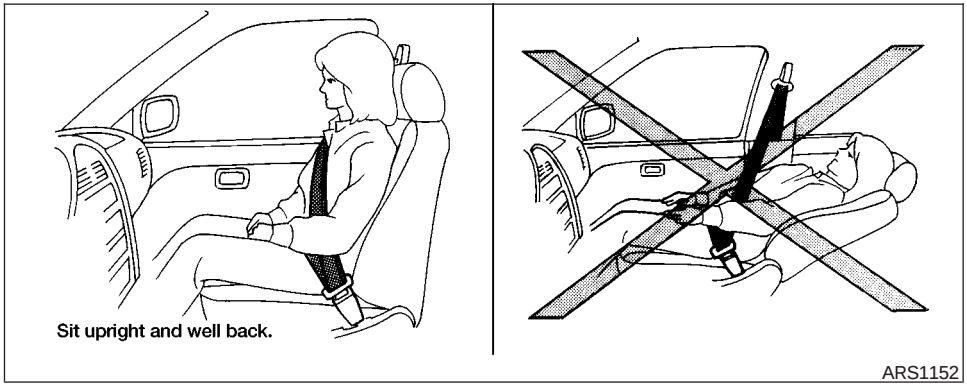

WARNING

- **Do not ride in a moving vehicle when the seatback is reclined. This can be dangerous. The shoulder belt will not be against your body. In an accident, you could be thrown into it and receive neck or other serious injuries. You could also slide under the lap belt and receive serious internal injuries.**

- **For the most effective protection when the vehicle is in motion, the seat should be upright. Always sit well back in the seat and adjust the seat properly. See "Precautions on Seat Belt Usage" later in this section.**

FRONT MANUAL SEAT ADJUSTMENT

WARNING

- **Do not adjust the driver's seat while driving so full attention may be given to vehicle operation. The seat may move suddenly and could cause loss of control of the vehicle.**
- **After adjustment, gently rock in the seat to make sure it is securely locked.**

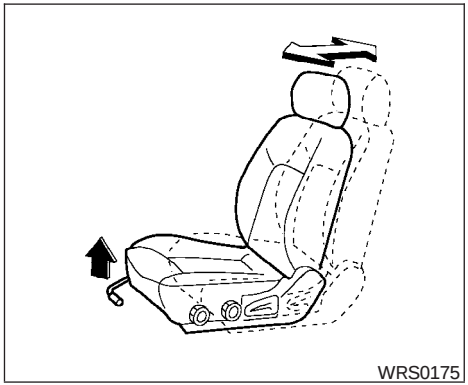

Forward and backward

Pull the lever up and hold it while you slide the seat forward or backward to the desired position. Release the lever to lock the seat in position.

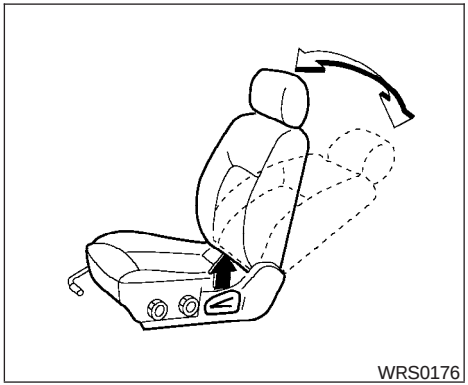

Reclining

To recline the seatback, pull the lever up and lean back. To bring the seatback forward, pull the lever up and lean your body forward. Release the lever to lock the seatback in position.

The reclining feature allows adjustment of the seatback for occupants of different sizes for added comfort and to help obtain proper seat belt fit (see “Precautions on seat belt usage” later in this section). Also, the seatback can be reclined to allow occupants to rest when the vehicle is stopped.

⚠ WARNING

After adjustment, gently rock in the seat to make sure it is securely locked.

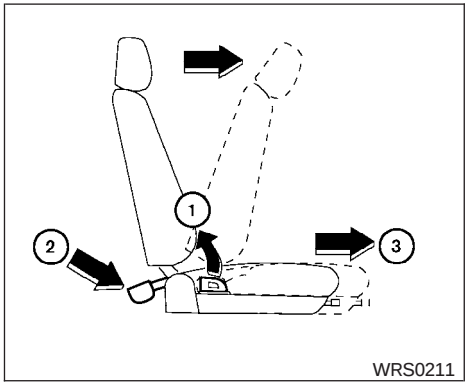

King cab passenger seat only

Tilting

The front passenger's seat can be tilted to make it easier for jump seat passengers to get in and out.

To tilt the seatback, pull the reclining lever up or push the tilt lever down. The seat automatically moves forward.

To return the seat, move the whole seat backward, then push the seatback up until it locks.

⚠ WARNING

After adjustment, gently rock in the seat to make sure it is securely locked.

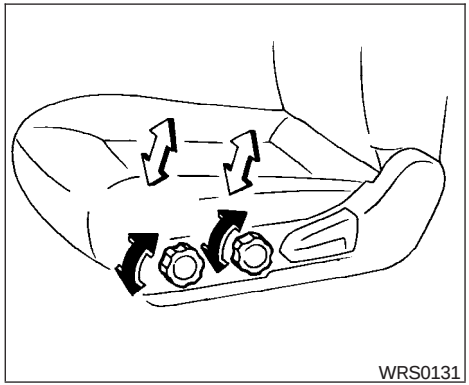

Seat lifter (if so equipped for driver's seat)

Turn either dial to adjust the angle and height of the seat cushion to the desired position.

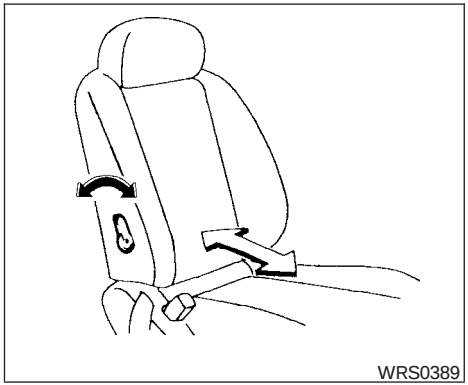

Lumbar support (if so equipped for driver's seat)

The lumbar support feature provides lower back support to the driver. Move the lever forward or backward to adjust the seat lumbar area.

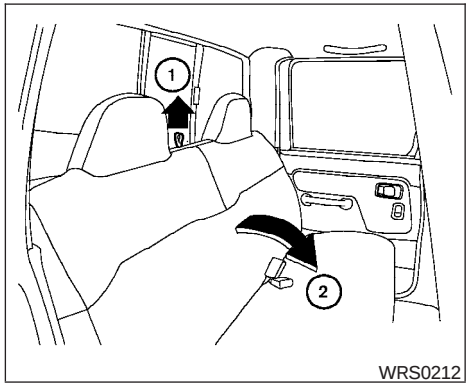

TILTING REAR BENCH SEAT (Crew Cab models only)

The rear bench seat can be tilted to remove the jacking tools from the storage area.

To tilt the seatback, pull the strap up ① and tilt ② the seatback forward.

⚠WARNING

Never allow anyone to ride in the cargo area or on the rear seat when it is in the fold-down position. Use of these areas by passengers without proper restraints could result in serious injury in an accident or sudden stop.

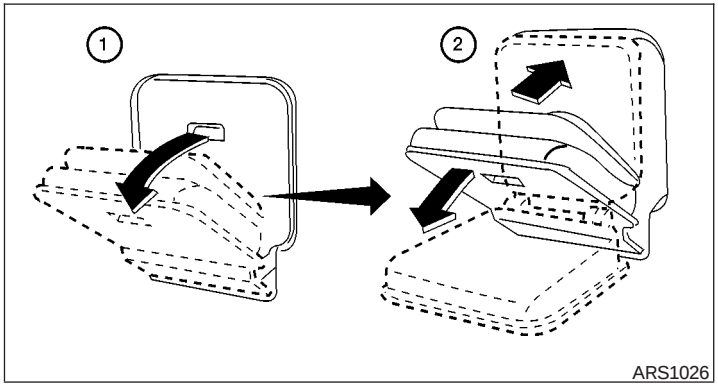

JUMP SEAT (if so equipped)

⚠ WARNING

- **Do not use a child restraint in the jump seats (King Cab model). These seats are not suitable for child restraint installation.**
- **When folding the jump seat, be careful not to squeeze your finger between the seat cushion and the body side.**

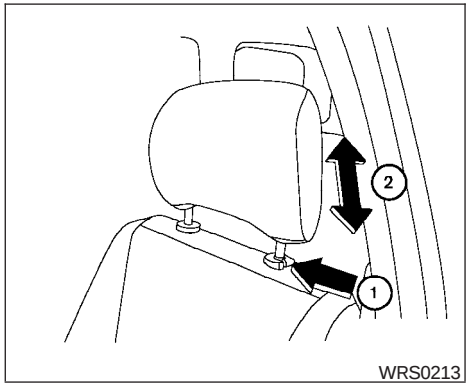

HEAD RESTRAINT ADJUSTMENT

To raise the head restraint, pull it up. To lower, push and hold the lock knob and push the head restraint down.

⚠ WARNING

Head restraints should be adjusted properly as they may provide significant protection against injury in an accident. Do not remove them. Check the adjustment after someone else uses the seat.

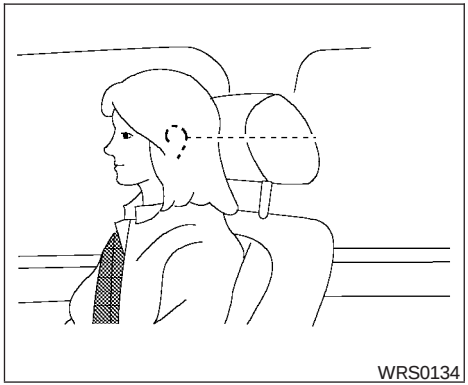

Adjust the head restraint so the center is level with the center of your ears.

SUPPLEMENTAL RESTRAINT SYSTEM

PRECAUTIONS ON SUPPLEMENTAL RESTRAINT SYSTEM

This Supplemental Restraint System (SRS) section contains important information concerning the driver and passenger supplemental front air bags and pre-tensioner seat belts.

Supplemental front impact air bag system: This system can help cushion the impact force to the head and chest of the driver and front passenger in certain frontal collisions.

The supplemental air bags are designed to **supplement** the crash protection provided by the driver and front passenger seat belts and are **not a substitute** for them. Seat belts should always be correctly worn and the driver and front passenger seated a suitable distance away from the steering wheel and instrument panel. (See “Seat belts” later in this section for instructions and precautions on seat belt usage.)

The supplemental air bags operate only when the ignition switch is in the ON or START position.

After turning the ignition key to the ON position, the supplemental air bag warning light illuminates. The supplemental air bag warning light will turn off after about 7 seconds if the system is operational.

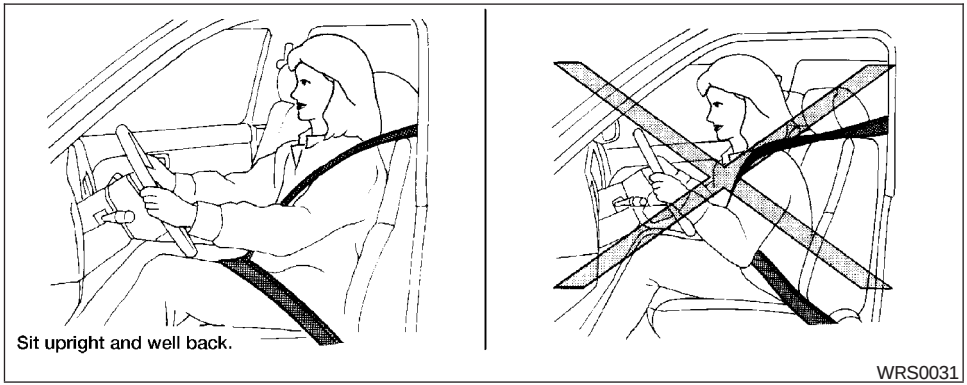

⚠WARNING

- **The supplemental front air bags ordinarily will not inflate in the event of a side impact, rear impact, rollover, or lower severity frontal collision. Always wear your seat belts to help reduce the risk or severity of injury in various kinds of accidents.**

- **The seat belts and the supplemental front air bags are most effective when you are sitting well back and upright in the seat. The front air bags inflate with great force. If you are unrestrained, leaning forward, sitting sideways or out of position in any way, you are at greater risk of injury or death in a crash. You may also receive serious or fatal injuries from the supplemental front air bag if you are up against it when it inflates. Always sit back against the seatback and as far away as practical from the steering wheel or instrument panel. Always use the seat belts.**

- **The driver and front passenger seat belt buckles are equipped with sensors that detect if the seat belts are fastened. The air bag system monitors the severity of a collision and then inflates the air bags based on belt usage. Failure to properly wear seat belts can increase the risk or severity of injury in an accident.**

- **Keep hands on the outside of the steering wheel. Placing them inside the steering wheel rim could increase the risk that they are injured when the supplemental front air bag inflates.**

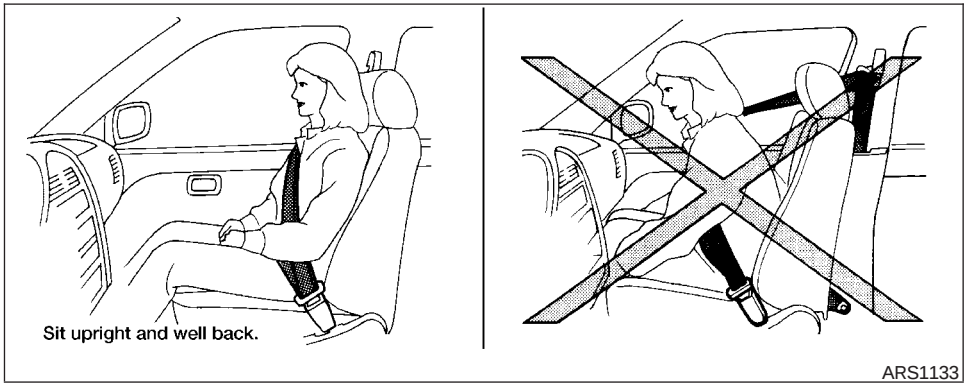

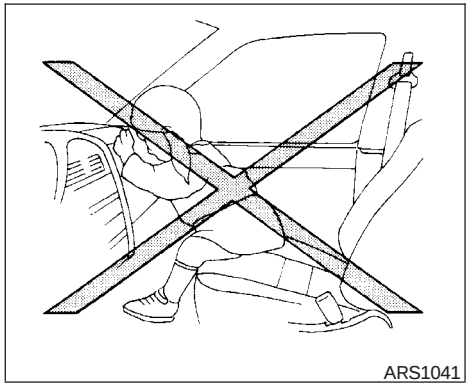

⚠ WARNING

Never let children ride unrestrained or extend their hands or face out of the window. Do not attempt to hold them in your lap or arms. Some examples of dangerous riding positions are shown in the illustrations.

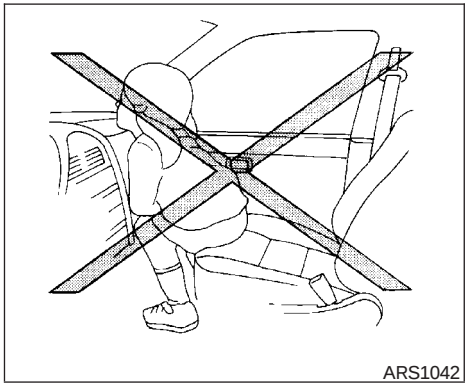
ARS1042

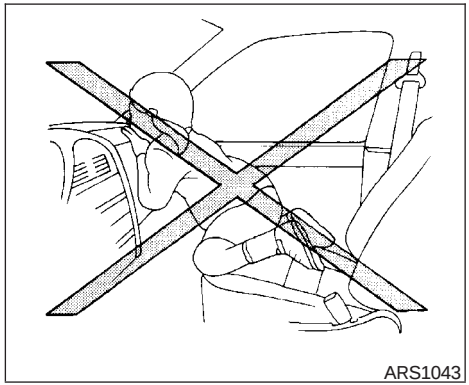
ARS1043

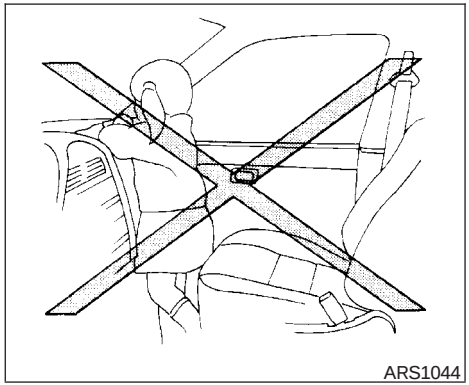
ARS1044

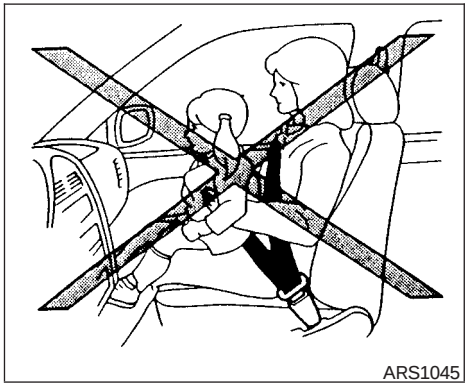
ARS1045

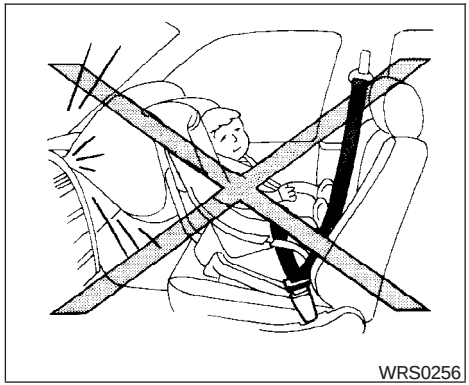
WRS0256

⚠ WARNING

- **Children may be severely injured or killed when the supplemental front air bags inflate if they are not properly restrained. Pre-teens and children should be properly restrained in the rear seat, if available.**

- **Never install a rear-facing child restraint in the front seat of a model equipped with a supplemental air bag ON/OFF switch unless you first turn OFF the air bag. An inflating supplemental air bag could seriously injure or kill your child. See "Child restraints" later in this section for details.**

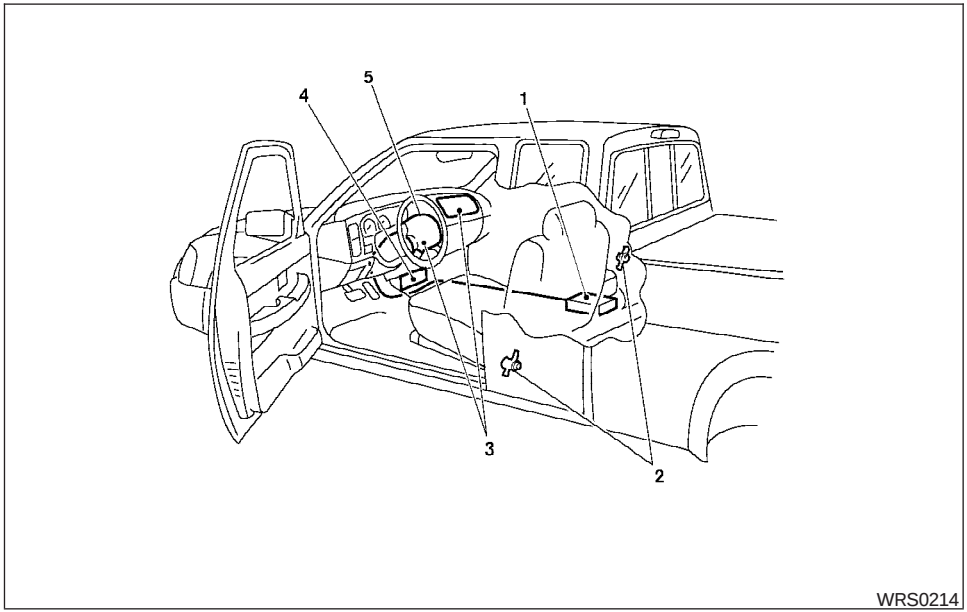

1. Diagnosis sensor unit
2. Seat belt pre-tensioner retractors
3. Supplemental air bag modules
4. Passenger air bag ON/OFF switch
5. Passenger air bag OFF indicator

Supplemental front air bag system

The driver supplemental front air bag is located in the center of the steering wheel. The passenger supplemental front air bag is mounted in the dashboard above the glove box.

These systems are designed to meet optional certification requirements under U.S. regulations. They are also permitted in Canada. The optional certification allows the front air bags to be designed to inflate somewhat less forcefully than previously. **However, all of the information, cautions and warnings in this manual still apply and must be followed.**

The supplemental front air bag system is designed to inflate in higher severity frontal collisions, although it may inflate if the forces in another type of collision are similar to those of a higher severity frontal impact. It may not inflate in certain frontal collisions. Vehicle damage (or lack of it) is not always an indication of proper supplemental front air bag system operation.

King Cab models are equipped with a supplemental front passenger air bag ON/OFF switch. Because no rear seat exists where a rear facing child restraint can be secured as in other models, the switch is designed to turn OFF the passenger supplemental air bag so that a rear facing child restraint can be used in the front passenger seat. See “Passenger supplemental air bag ON/OFF switch and light” later in this section for details.

Crew Cab models are not equipped with a supplemental front passenger air bag ON/OFF switch because they have a rear seat for child restraint installation. Further, for Crew Cab mod-

els, the supplemental air bag system has dual stage inflators for both the driver and passenger air bags. The system monitors information from the crash zone sensor, the diagnosis sensor unit and seat belt buckle sensors that detect if the seat belts are fastened. Inflator operation is based on the severity of a collision and whether the seat belts are being used. Only one front air bag may inflate in a crash, depending on the crash severity and whether the front occupants are belted or unbelted. This does not indicate improper performance of the system. If you have any questions about the performance of your air bag system, please contact your NISSAN dealer.

When the supplemental front air bag inflates, a fairly loud noise may be heard, followed by the release of smoke. This smoke is not harmful and does not indicate a fire. Care should be taken to not inhale it, as it may cause irritation and choking. Those with a history of a breathing condition should get fresh air promptly.

Supplemental front air bags, along with the use of seat belts, help to cushion the impact force on the face and chest of the front occupants. They can help save lives and reduce serious injuries. However, an inflating front air bag may cause facial abrasions or other injuries. Front air bags do not provide restraint to the lower body.

Seat belts should be correctly worn and the driver and passenger seated upright as far as practical away from the steering wheel or instrument panel. The supplemental front air bags inflate quickly in order to help protect the front occupants. Because of this, the force of the front air bag inflating can increase the risk of injury if the occupant is too close to, or is against, the front air bag module during inflation.

The front air bags deflate quickly after a collision.

The supplemental front air bags operate only when the ignition switch is in the ON or START position.

After turning the ignition key to the ON position, the supplemental air bag warning light illuminates. The supplemental air bag warning light will turn off after about 7 seconds if the system is operational.

⚠ WARNING

- **Do not place any objects on the steering wheel pad or on the instrument panel. Also, do not place any objects between any occupant and the steering wheel or instrument panel. Such objects may become dangerous projectiles and cause injury if the supplemental front air bag inflates.**
- **Immediately after inflation, several front air bag system components will be hot. Do not touch them; you may severely burn yourself.**
- **No unauthorized changes should be made to any components or wiring of the supplemental air bag system. This is to prevent accidental inflation of the supplemental air bag or damage to the supplemental air bag system.**
- **Do not make unauthorized changes to your vehicle's electrical system, suspension system or front end structure. This could affect proper operation of the supplemental front air bag system.**
- **Tampering with the supplemental front air bag system may result in serious personal injury. Tampering includes changes to the steering wheel and the instrument panel assembly by placing material over the steering wheel pad and above the instrument panel or by installing additional trim material around the air bag system.**

- **Work on and around the supplemental front air bag system should be done by a NISSAN dealer. Installation of electrical equipment should also be done by a NISSAN dealer. The Supplemental Restraint System (SRS) wiring should not be modified or disconnected. Unauthorized electrical test equipment and probing devices should not be used on the air bag system.**
- **A cracked windshield should be replaced immediately by a qualified repair facility. A cracked windshield could affect inflation of the supplemental air bag system.**
- **The SRS wiring harness connectors are yellow and orange for easy identification.**

When selling your vehicle, we request that you inform the buyer about the supplemental front air bag system and guide the buyer to the appropriate sections in this Owner's Manual.

Pre-tensioner seat belt system (for front seats)

⚠ WARNING

- **The pre-tensioner seat belt cannot be reused after activation. It must be replaced together with the retractor and buckle as a unit.**
- **If the vehicle becomes involved in a frontal collision but the pre-tensioner is not activated, be sure to have the pre-tensioner system checked and, if necessary, replaced by your NISSAN dealer.**
- **No unauthorized changes should be made to any components or wiring of the pre-tensioner seat belt system. This is to prevent accidental activation of the pre-tensioner seat belt or damage to the pre-tensioner seat belt operation. Tampering with the pre-tensioner seat belt system may result in serious personal injury.**
- **Work around and on the pre-tensioner system should be done by a NISSAN dealer. Installation of electrical equipment should also be done by a NISSAN dealer. Unauthorized electrical test equipment and probing devices should not be used on the pre-tensioner seat belt system.**
- **If you need to dispose of the pre-tensioner or scrap the vehicle, contact a NISSAN dealer. Correct pre-tensioner disposal procedures are set forth in the appropriate NISSAN Service Manual. Incorrect disposal procedures could cause personal injury.**

The front seat pre-tensioner seat belt system activates in conjunction with the supplemental air bag systems. Working with the seat belt retractor, it helps tighten the seat belt when the vehicle becomes involved in certain types of collisions, helping to restrain front seat occupants.

The pre-tensioner is encased with the seat belt's retractor. These seat belts are used the same as conventional seat belts.

When the pre-tensioner seat belt activates, smoke is released and a loud noise may be heard. This smoke is not harmful and does not indicate a fire. Care should be taken not to inhale it, as it may

cause irritation and choking. Those with a history of a breathing condition should get fresh air promptly.

If any abnormality occurs in the pre-tensioner system, the supplemental air bag warning light will flash intermittently after the ignition key is turned to the ON or START position. In this case, the pre-tensioner seat belt will not function properly. They must be checked and repaired. Take your vehicle to the nearest NISSAN dealer.

When selling your vehicle, we request that you inform the buyer about the pre-tensioner seat belt system and guide the buyer to the appropriate sections in this Owner's Manual.

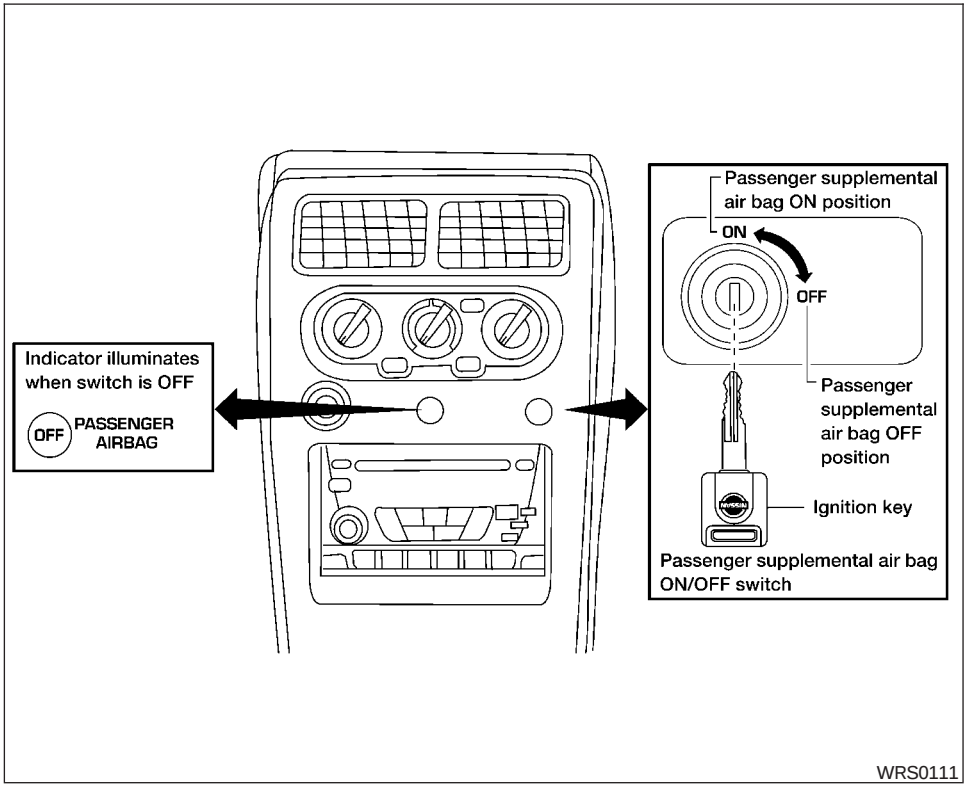

PASSENGER SUPPLEMENTAL AIR BAG ON/OFF SWITCH AND LIGHT (except Crew Cab models)

⚠WARNING

Air bags and seat belts are designed to work as a unit. Do not switch the air bag OFF unless you meet federal government criteria. Switching off the air bag may increase the risk of serious or fatal injuries in a collision where the air bag would have inflated.

In rare instances, some passengers are exposed to serious injury risks from inflating air bags, especially if not properly restrained. The U.S. and Canadian federal governments recognize other limited circumstances in which an air bag could reduce safety. The passenger air bag ON/OFF switch is, therefore, allowed in models without full rear seats. Because the overall benefits of air bags are great, in most situations air bags should not be switched off unless special government criteria exist.

The passenger air bag ON/OFF switch is located under the climate controls. It can be used to turn the passenger supplemental air bag OFF.

The ON/OFF switch should ONLY be used to turn the passenger supplemental air bag OFF when the following government criteria exists:

- Infants (less than 1 year old) in rear facing child restraints MUST be placed in the front passenger seat.
- Children ages 1-12 years MUST be placed in the front passenger seat.
- The passenger has a medical condition which, according to a physician, causes the air bag to pose a special risk and makes the potential harm from the air bag greater than the potential harm from turning off the air bag.

Seat belts and child restraints should always be properly used. See “Precautions on seat belt usage” and “Child restraints” later in this section for details.

To turn the passenger supplemental air bag OFF, insert the ignition key in the passenger supplemental air bag ON/OFF switch and turn the switch clockwise to the OFF position. Then remove the key. When the ignition is turned to the ON or START position the passenger air bag OFF indicator light will illuminate to indicate the air bag is OFF. To turn the passenger supplemental air bag ON, insert the ignition key in the passenger supplemental air bag ON/OFF switch and turn the switch counter clockwise to the ON position. Then remove the key. When the ignition is turned to the ON or START position the passenger air bag OFF indicator light will illuminate for 7 seconds to indicate the system is working properly and then go out to indicate that the passenger supplemental air bag is ON.

1. Do not operate the passenger supplemental air bag ON/OFF switch when the ignition is ON.
2. Fully turn the passenger supplemental air bag ON/OFF switch to either the ON or OFF position.
3. Always remove the ignition key after using the passenger supplemental air bag ON/OFF switch.
4. The passenger air bag OFF indicator light should illuminate for 7 seconds after the ignition is turned to the ON or START position. If not, the vehicle should be taken to a NISSAN dealer.

Items 2 and 3 above are intended to prevent improper use of the ignition key.

When the switch is turned to the ON position, the passenger supplemental air bag is enabled and could inflate in a frontal collision. When the switch is turned to the OFF position, the passenger supplemental air bag is disabled and will not

inflate in a frontal collision. The passenger supplemental air bag OFF indicator light on the instrument panel illuminates when the passenger supplemental air bag ON/OFF switch is turned to the OFF position. The driver's side supplemental air bag always remains enabled and is not affected by the passenger supplemental air bag ON/OFF switch.

The passenger supplemental air bag light, displaying OFF in the center of the instrument panel, monitors the position of the passenger supplemental air bag ON/OFF switch. When the ignition key is in the ON or START position, the light illuminates for about 7 seconds and then turns off if the air bag ON/OFF switch is in the ON position, or stays on if the passenger supplemental air bag ON/OFF switch is in the OFF position.

⚠ WARNING

- **Do not switch the air bag OFF unless you meet the federal government criteria outlined previously. This vehicle (except Crew Cab models) is equipped with seat belts with a "load limiter" feature. The seat belts are designed to work with the air bags to reduce the risk of injury in a collision. The seat belts are designed to release additional belt webbing during some collisions to reduce the concentration of force on the occupant's chest area. In a collision with the airbag turned OFF, the seat belt may allow the occupant enough forward movement to incur serious or fatal injuries.**
- **Keep the passenger supplemental air bag ON/OFF switch turned ON unless a rear-facing child restraint must be used in the front seat, if children ages 1-12 must be placed in the front seat, or if the passenger has a medical condition, which, according to a physician, causes the air bag to pose a special risk of harm (the federal government criteria). If the switch is OFF, the air bag will not inflate in a collision as designed and the extra protection provided by the air bag may be lost.**
- **Be sure to turn the passenger supplemental air bag ON/OFF switch OFF when using a rear facing child restraint in the front passenger seat. If it is not OFF, the air bag may inflate in a collision. The force of the rapidly inflating air bag could cause serious injury or kill the child in the child restraint. Children ages 1-12 and persons with special medical conditions may also be at risk from an inflating air bag.**

- **If the supplemental air bag warning light located in the instrument panel next to the speedometer comes on when the passenger supplemental air bag OFF light is also illuminated, something may be wrong with the air bag system. Infants, children ages 1-12 or persons with special medical conditions should not use the front passenger seat until the system is checked by your NISSAN dealer.**

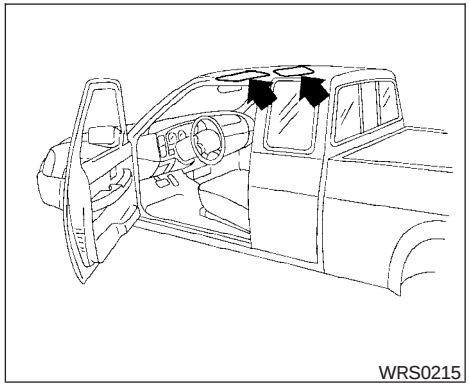

SUPPLEMENTAL AIR BAG WARNING LABELS

Warning labels about the supplemental front air bag system are placed in the vehicle as shown in the illustration.

SUPPLEMENTAL AIR BAG WARNING LIGHT

The supplemental air bag warning light, displaying in the instrument panel, monitors the circuits of the supplemental air bag and pre-tensioner seat belt systems. The circuits monitored by the supplemental air bag warning light are the diagnosis sensor unit, crash zone sensor, supplemental air bag modules, pre-tensioner seat belts and all related wiring.

When the ignition key is in the ON or START position, the supplemental air bag warning light illuminates for about 7 seconds and then turns off. This means the system is operational.

If any of the following system conditions occur, the supplemental air bag and pre-tensioner seat belt systems need servicing:

- The supplemental air bag warning light remains on after approximately 7 seconds.
- The supplemental air bag warning light flashes intermittently.
- The supplemental air bag warning light does not come on at all.

Under these conditions, the Supplemental Restraint System (supplemental front air bag or pre-tensioner seat belt systems) may not operate properly. It must be checked and repaired. Take your vehicle to the nearest NISSAN dealer.

⚠ WARNING

If the supplemental air bag warning light is on, it could mean that the supplemental front air bag or pre-tensioner seat belt systems will not operate in an accident. To help avoid injury to yourself or others, have your vehicle checked by a NISSAN dealer as soon as possible.

Repair and replacement procedure

The supplemental front air bag and pre-tensioner seat belts are designed to inflate on a one-time-only basis. As a reminder, unless it is damaged, the supplemental air bag warning light remains illuminated after inflation has occurred. Repair and replacement of these supplemental air bag systems should be done only by a NISSAN dealer.

When maintenance work is required on the vehicle, the supplemental front air bags, pre-tensioner seat belts and related parts should be pointed out to the person performing the maintenance. The ignition key should always be in the LOCK position when working under the hood or inside the vehicle.

⚠ WARNING

- **Once a supplemental front air bag has inflated, the air bag module will not function and must be replaced. Additionally, if any of the supplemental front air bags inflate, the activated pre-tensioner seat belts must also be replaced. The air bag module and pre-tensioner seat belt system should be replaced by a NISSAN dealer. The air bag module and pre-tensioner seat belt system cannot be repaired.**
- **The supplemental front air bag system and pre-tensioner seat belt system should be inspected by a NISSAN dealer if there is any damage to the front end portion of the vehicle.**
- **If you need to dispose of the supplemental air bag, pre-tensioner seat belt system or scrap the vehicle, contact a NISSAN dealer. Correct supplemental air bag and pre-tensioner seat belt system disposal procedures are set forth in the appropriate NISSAN Service Manual. Incorrect disposal procedures could cause personal injury.**

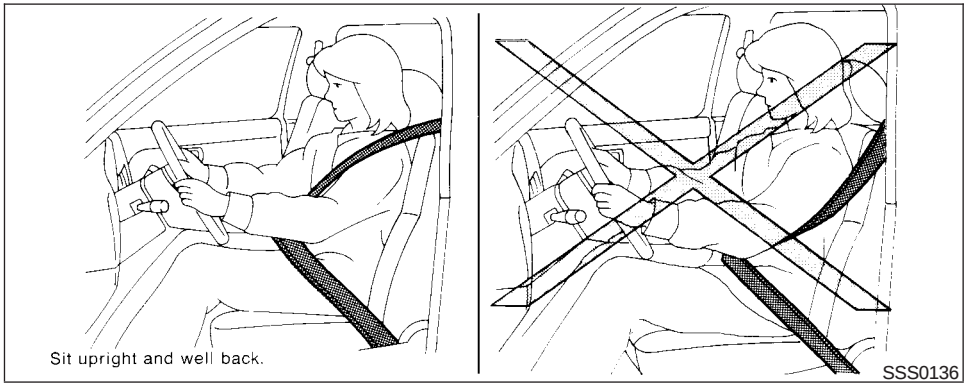

PRECAUTIONS ON SEAT BELT USAGE

If you are wearing your seat belt properly adjusted, and you are sitting upright and well back in your seat, your chances of being injured or killed in an accident and/or the severity of injury may be greatly reduced. NISSAN strongly encourages you and all of your passengers to buckle up every time you drive, even if your seating position includes a supplemental air bag.

Most U.S. states and Canadian provinces or territories specify that seat belts be worn at all times when a vehicle is being driven.

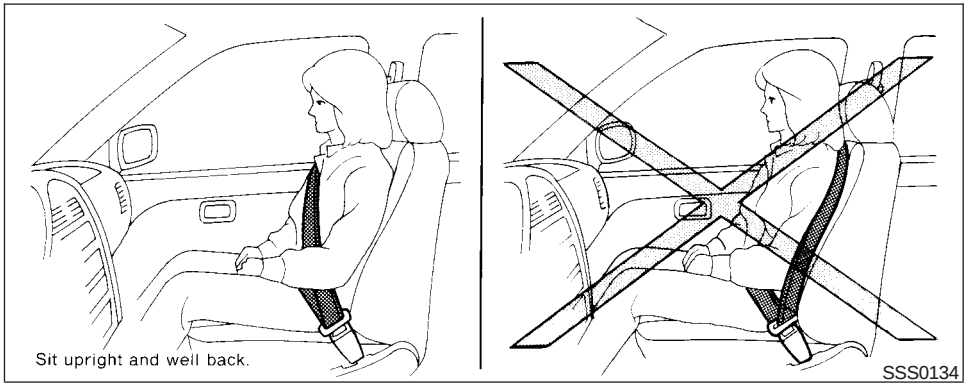

⚠ WARNING

- **Every person who drives or rides in this vehicle should use a seat belt at all times. Children should be properly restrained in the rear seat (Crew Cab models) and, if appropriate, in a child restraint.**

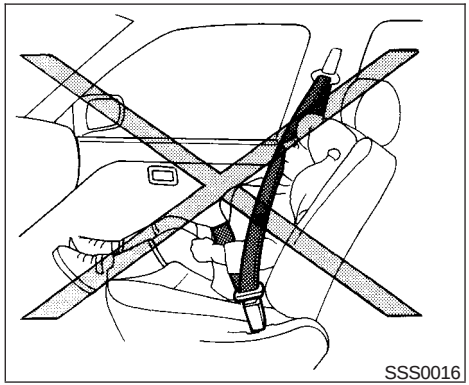

⚠ WARNING

- **The seat belt should be properly adjusted to a snug fit. Failure to do so may reduce the effectiveness of the entire restraint system and increase the chance or severity of injury in an accident. Serious injury or death can occur if the seat belt is not worn properly.**

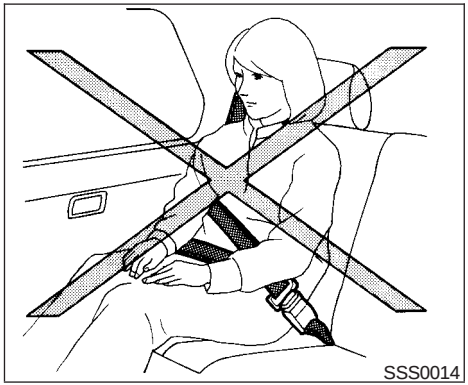

⚠ WARNING

- **Always route the shoulder belt over your shoulder and across your chest. Never run the belt behind your back, under your arm or across your neck. The belt should be away from your face and neck, but not falling off your shoulder.**
- **Position the lap belt as low and snug as possible AROUND THE HIPS, NOT THE WAIST. A lap belt worn too high could increase the risk of internal injuries in an accident.**
- **Be sure the seat belt tongue is securely fastened to the proper buckle.**
- **Do not wear the seat belt inside out or twisted. Doing so may reduce its effectiveness.**
- **Do not allow more than one person to use the same seat belt.**
- **Never carry more people in the vehicle than there are seat belts.**
- **Once the pre-tensioner seat belt has activated, it cannot be reused and must be replaced together with the retractor. See your NISSAN dealer.**
- **Never allow anyone to ride in the cargo area or in a slide-in camper or other type cargo area cover while the vehicle is in motion. These areas do not contain seat belts. It is not designed for passengers. They could be injured in sudden braking or a collision.**
- **If the seat belt warning light glows continuously while the ignition is turned ON with all doors closed and all seat belts fastened, it may indicate a malfunction in the system. Have the system checked by a NISSAN dealer.**
- **Removal and installation of the pre-tensioner seat belt system components should be done by a NISSAN dealer.**
- **All seat belt assemblies, including retractors and attaching hardware, should be inspected after any collision by a NISSAN dealer. NISSAN recommends that all seat belt assemblies in use during a collision be replaced unless the collision was minor and the belts show no damage and continue to operate properly. Seat belt assemblies not in use during a collision should also be inspected and replaced if either damage or improper operation is noted.**
- **All child restraints and attaching hardware should be inspected after any collision. Always follow the restraint manufacturer's inspection instructions and replacement recommendations. The child restraints should be replaced if they are damaged.**

CHILD SAFETY

Children need adults to help protect them. They need to be properly restrained.

The proper restraint depends on the child's size. Generally, infants up to about 1 year and less than 20 pounds, (9 kg) should be placed in rear

facing child restraints. Front facing child restraints are available for children who outgrow rear facing child restraints.

⚠ WARNING

- **Be sure to turn the passenger supplemental air bag ON/OFF switch OFF when using a rear facing child restraint in the front passenger seat in models so equipped. If it is not OFF, the air bag may inflate in a collision. The force of the rapidly inflating air bag could cause serious injury or kill the child in the child restraint. See "Passenger supplemental air bag ON/OFF switch and light" earlier in this section.**
- **In Crew Cab models, never install a rear facing child restraint in the front passenger seat. An inflating supplemental air bag could seriously injure or kill your child. A rear facing child restraint must only be used in the rear seat.**
- **Do not install a child restraint in the jump seats (King Cab model). These seats are not suitable for child restraint installation.**
- **Infants and children need special protection. The vehicle's seat belts may not fit them properly. The shoulder belt may come too close to the face or neck. The lap belt may not fit over their small hip bones. In an accident, an improperly fitting seat belt could cause serious or fatal injury. Always use appropriate child restraints.**

All U.S. states and Canadian provinces or territories require the use of approved child restraints for infants and small children. See "Child Restraints" later in this section.

In addition, there are many types of child restraints available for larger children which should be used for maximum protection.

NISSAN recommends that all pre-teens and children be restrained in the rear seat if available (Crew Cab models). According to accident statistics, children are safer when properly restrained in the rear seat than in the front seat. This is especially important because your vehicle has a supplemental restraint system (Air bag system) for the front passenger. See "Supplemental restraint system" earlier in this section. Also, see "Passenger air bag ON/OFF switch and light" earlier in this section.

Infants and small children

NISSAN recommends that infants and small children be placed in child restraints that comply with Federal Motor Vehicle Safety Standards or Canadian Motor Vehicle Safety Standards. You should choose a child restraint that fits your vehicle and always follow the manufacturer's instructions for installation and use.

Larger children

Children who are too large for child restraints should be seated and restrained by the seat belts which are provided.

If the child's seating position has a shoulder belt that fits close to the face or neck, the use of a booster seat (commercially available) may help overcome this. The booster seat should raise the child so that the shoulder belt is properly positioned across the top, middle portion of the shoulder and the lap belt is low on the hips. The booster seat should fit the vehicle seat and have a label certifying that it complies with Federal Motor Vehicle Safety Standards or Canadian Motor Vehicle Safety Standards. Once the child has grown so the shoulder belt is no longer on or near the face and neck, use the shoulder belt without the booster seat.

⚠ WARNING

Never let a child stand or kneel on any seat and do not allow a child in the cargo areas while the vehicle is moving. The child could be seriously injured or killed in an accident or sudden stop.

PREGNANT WOMEN

NISSAN recommends that pregnant women use seat belts. The seat belt should be worn snug, and always position the lap belt as low as possible around the hips, not the waist. Place the shoulder belt over your shoulder and across your chest. Never run the lap/shoulder belt over your abdominal area. Contact your doctor for specific recommendations.

INJURED PERSONS

NISSAN recommends that injured persons use seat belts. Check with your doctor for specific recommendations.

THREE-POINT TYPE SEAT BELT WITH RETRACTOR

⚠ WARNING

- **Every person who drives or rides in this vehicle should use a seat belt at all times.**
- **Do not ride in a moving vehicle when the seatback is reclined. This can be dangerous. The shoulder belt will not be against your body. In an accident, you could be thrown into it and receive neck or other serious injuries. You could also slide under the lap belt and receive serious internal injuries.**
- **For the most effective protection when the vehicle is in motion, the seat should be upright. Always sit well back in the seat and adjust the seat belt properly.**

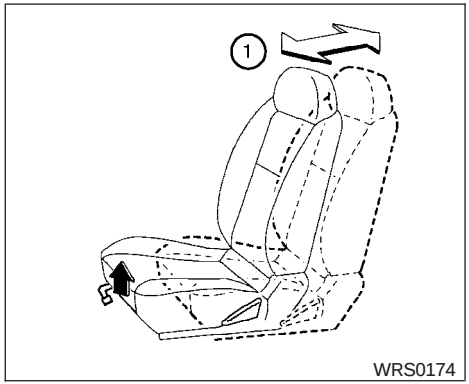

Manual front seat shown

Fastening the seat belts

① Adjust the seat. See “Seats” earlier in this section.

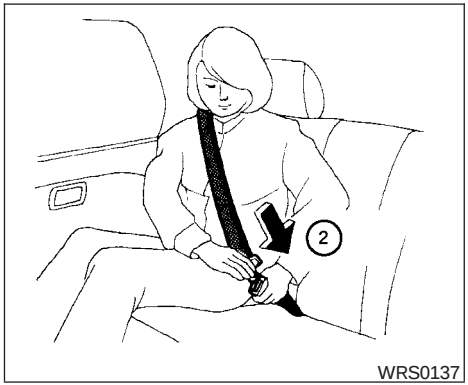

② Slowly pull the seat belt out of the retractor and insert the tongue into the buckle until you hear and feel the latch engage.

The retractor is designed to lock during a sudden stop or on impact. A slow pulling motion permits the seat belt to move, and allows you some freedom of movement in the seat.

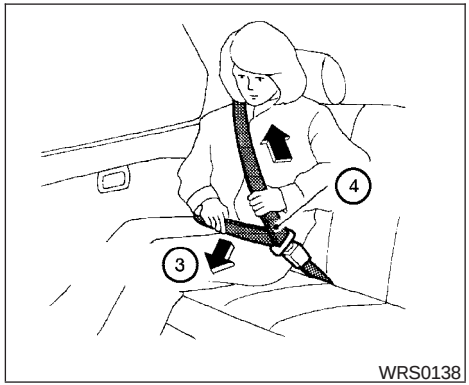

③ Position the lap belt portion **low and snug on the hips** as shown.

④ Pull the shoulder belt portion toward the retractor to take up extra slack. Be sure the shoulder belt is routed over your shoulder and across your chest.

The front passenger seat belt and the rear three-point seat belts (Crew Cab only) have a cinching mechanism for child restraint installation. It is referred to as the automatic locking mode.

When automatic locking mode is activated the seat belt cannot be extended again until the seat belt tongue is detached from the buckle and fully retracted. Once retracted, the seat belt is in the emergency locking mode. See “Child restraints” later in this section for more information.

The automatic locking mode should be used only for child restraint installation. During normal seat belt use by a passenger, the locking mode should not be activated. If it is activated it may cause uncomfortable seat belt tension.

⚠WARNING

When fastening the seat belts, be certain that the seatbacks are completely secured in the latched position. If they are not completely secured, passengers may be injured in an accident or sudden stop.

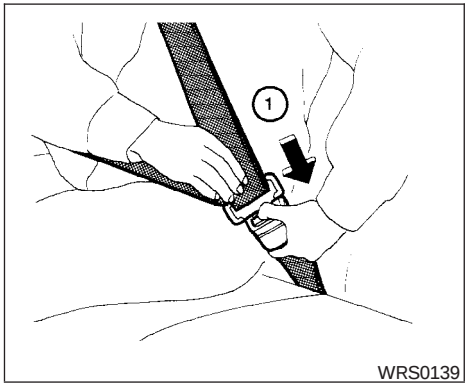

Unfastening the seat belts

① To unfasten the seat belt, press the button on the buckle. The seat belt automatically retracts.

Checking seat belt operation

Seat belt retractors are designed to lock seat belt movement by two separate methods:

- When the seat belt is pulled quickly from the retractor.
- When the vehicle slows down rapidly.

To increase your confidence in the seat belts, check the operation as follows.

- Grasp the shoulder belt and pull forward quickly. The retractor should lock and restrict further belt movement.

If the retractor does not lock during this check or if you have any questions about seat belt operation, see a NISSAN dealer.

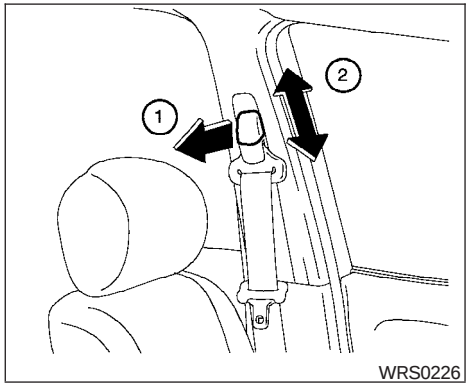

Shoulder belt height adjustment (For front seats)

The shoulder belt anchor height should be adjusted to the position best for you. (See “Precautions on seat belt usage” earlier in this section.) To adjust, pull out the adjustment button ① and move the shoulder belt anchor to the desired position ②, so the belt passes over the center of the shoulder. The belt should be away from your face and neck, but not falling off your shoulder. Release the adjustment button to lock the shoulder belt anchor into position.

⚠ WARNING

- **After adjustment, release the adjustment button and try to move the shoulder belt anchor up and down to make sure it is securely fixed in position.**
- **The shoulder belt anchor height should be adjusted to the position best for you. Failure to do so may reduce the effectiveness of the entire restraint system and increase the chance or severity of injury in an accident.**

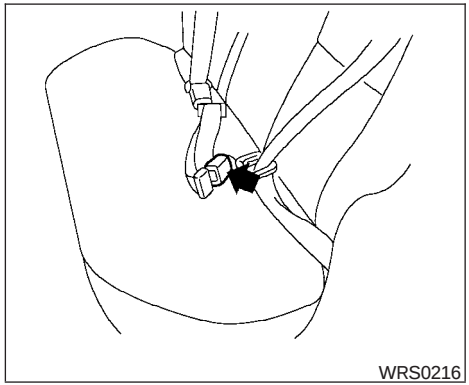

TWO-POINT TYPE SEAT BELT WITHOUT RETRACTOR (jump seat in King Cab models and center of rear seat in Crew Cab models)

⚠ WARNING

- **Do not install a child restraint in the jump seats (King Cab model). These seats are not suitable for child restraint installation.**
- **Serious or fatal injury could occur.**

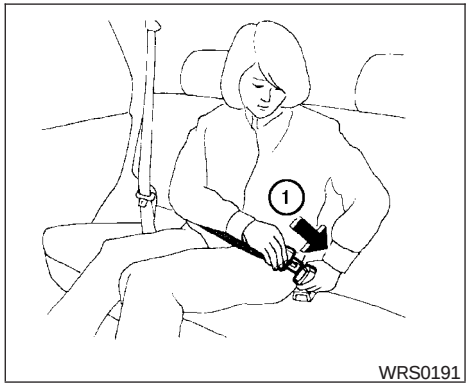

Fastening the belts

1. Insert the tongue into the buckle until you hear and feel the latch engage.

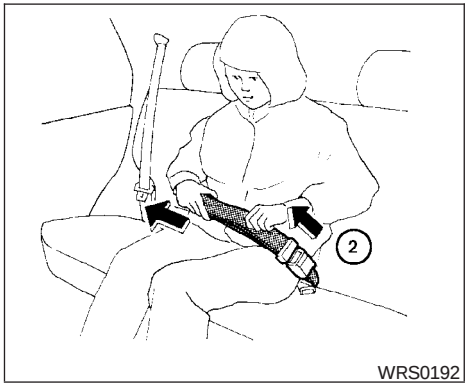

2. Tighten the belt by pulling the free end of the belt away from the tongue.

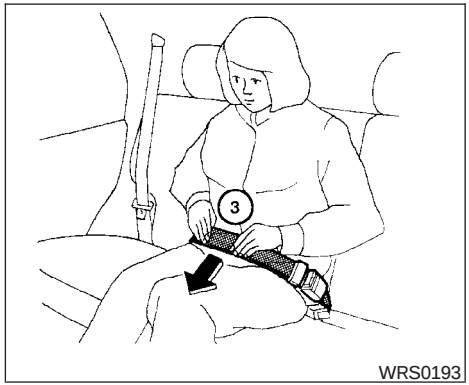

3. Position the lap belt **low and snug on the hips** as illustrated.

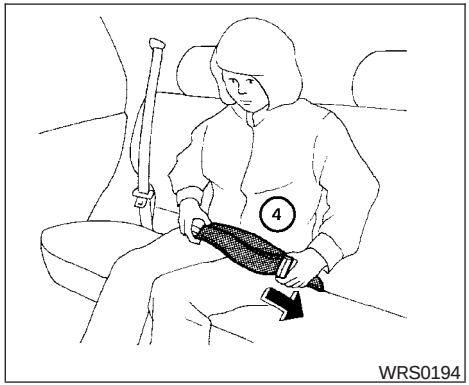

4. Loosen the belt by holding the tongue at a right angle to the belt, then pull on the belt.

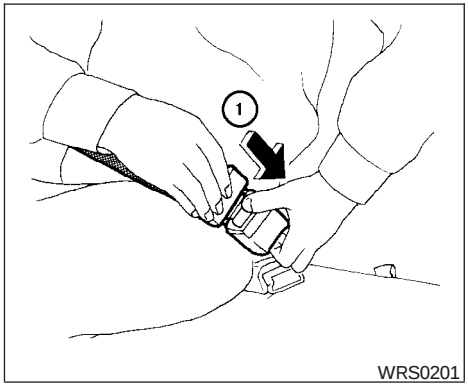

Unfastening the seat belts

To unfasten the seat belt, press the button the buckle.

SEAT BELT EXTENDERS

If, because of body size or driving position, it is not possible to properly fit the lap-shoulder belt and fasten it, an extender is available which is compatible with the installed seat belts. The extender adds approximately 8 inches (200 mm) of length and may be used for either the driver or front passenger seating position. See a NISSAN dealer for assistance if an extender is required.

⚠ WARNING

- **Only NISSAN seat belt extenders, made by the same company which made the original equipment seat belts, should be used with NISSAN seat belts.**
- **Adults and children who can use the standard seat belt should not use an extender. Such unnecessary use could result in serious personal injury in the event of an accident.**
- **Never use seat belt extenders to install child restraints. If the child restraint is not secured properly, the child could be seriously injured in a collision or a sudden stop.**

SEAT BELT MAINTENANCE

- **To clean the seat belt webbing,** apply a mild soap solution or any solution recommended for cleaning upholstery or carpet. Then wipe with a cloth and allow the seat belts to dry in the shade. Do not allow the seat belts to retract until they are completely dry.
- **If dirt builds up in the shoulder belt guide** of the seat belt anchors, the seat belts may retract slowly. Wipe the shoulder belt guide with a clean, dry cloth.
- **Periodically check to see that the seat belt and the metal components,** such as buckles, tongues, retractors, flexible wires and anchors, work properly. If loose parts, deterioration, cuts or other damage on the webbing is found, the entire seat belt assembly should be replaced.

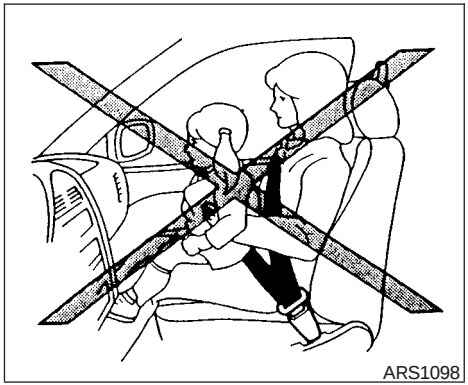
ARS1098

PRECAUTIONS ON CHILD RESTRAINTS

WARNING

- **Infants and small children should always be placed in an appropriate child restraint while riding in the vehicle. Failure to use a child restraint can result in serious injury or death.**

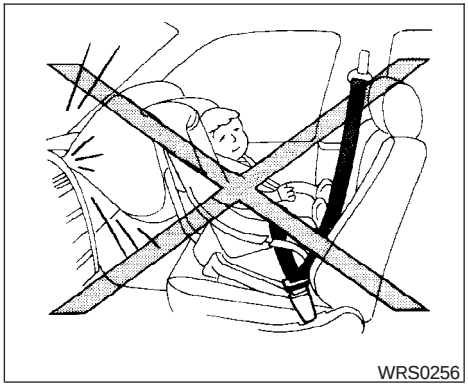
WRS0256

WARNING

- **Infants and small children should never be carried on your lap. It is not possible for even the strongest adult to resist the forces of a severe accident. The child could be crushed between the adult and parts of the vehicle. Also, do not put the same seat belt around both your child and yourself.**
- **In Crew Cab models, never install a rear facing child restraint in the front passenger seat. An inflating supplemental air bag could seriously injure or kill your child. A rear facing child restraint must only be used in the rear seat.**
- **Never install a rear-facing child restraint in the front seat of a model equipped with a supplemental air bag ON/OFF switch unless you first turn OFF the air bag. An inflating air bag could seriously injure or kill your child. See “Passenger supplemental air bag ON/OFF switch and light” earlier in this section.**
- **An improperly installed child restraint could lead to serious injury or death in an accident.**
- **NISSAN recommends that the child restraint be installed in the rear seat. According to accident statistics, children are safer when properly restrained in the rear seat than in the front seat.**

In general, child restraints are designed to be installed with a lap belt or the lap portion of a three-point type seat belt. In addition, this vehicle is equipped with a universal child restraint lower anchor system, referred to as the LATCH (Lower Anchors and Tethers for CHildren) system. Some

child restraints include two rigid or webbing-mounted attachments that can be connected to these lower anchors. For details, see the "LATCH (Lower Anchors and Tethers for CHildren) system" later in this section.

Child restraints for infants and small children of various sizes are offered by several manufacturers. When selecting any child restraint, keep the following points in mind:

- Choose only a restraint with a label certifying that it complies with Federal Motor Vehicle Safety Standard 213 or Canadian Motor Vehicle Safety Standard 213.
- Check the child restraint in your vehicle to be sure it is compatible with the vehicle's seat and seat belt system.
- If the child restraint is compatible with your vehicle, place your child in the child restraint and check the various adjustments to be sure the child restraint is compatible with your child. Always follow all recommended procedures.

All U.S. states and provinces of Canada require that infants and small children be restrained in an approved child restraint at all times while the vehicle is being operated.

⚠ WARNING

- **Do not install a child restraint in the jump seats (King Cab model). These seats are not suitable for child restraint installation.**
- **Improper use of a child restraint can increase the risk or severity of injury for both the child and other occupants of the vehicle.**
- **Follow all of the child restraint manufacturer's instructions for installation and use. When purchasing a child restraint, be sure to select one which will fit your child and vehicle. It may not be possible to properly install some types of child restraints in your vehicle.**
- **If the child restraint is not anchored properly, the risk of a child being injured in a collision or a sudden stop greatly increases.**
- **Adjustable seatbacks should be positioned to fit the child restraint, but as upright as possible.**
- **After attaching the child restraint, test it before you place the child in it. Push it from side to side. Try to tug it forward and check to see if the belt holds the restraint in place. The child restraint should not move more than 1 inch (25 mm). If the restraint is not secure, tighten the belt as necessary, or put the restraint in another seat and test it again.**
- **For a front-facing child restraint, if the seat position where it is installed has a three-point type lap/shoulder belt, check to make sure the shoulder belt does not go in front of the child's face or neck. If it does, put the shoulder belt behind the child restraint. If you must install a front facing child restraint in the front seat, see "Installation on front passenger seat" later in this section.**
- **When your child restraint is not in use, keep it secured with a seat belt to prevent it from being thrown around in case of a sudden stop or accident.**

⚠ CAUTION

Remember that a child restraint left in a closed vehicle can become very hot. Check the seating surface and buckles before placing your child in the child restraint.

INSTALLATION ON REAR BENCH SEAT CENTER POSITION (Crew Cab models only)

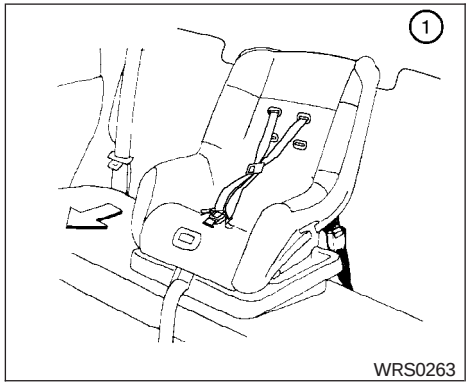

Front Facing – step 1

Front facing

When you install a child restraint in the rear center seat, follow these steps:

1. Position the child restraint on the seat as illustrated. Always follow the restraint manufacturer's instructions.

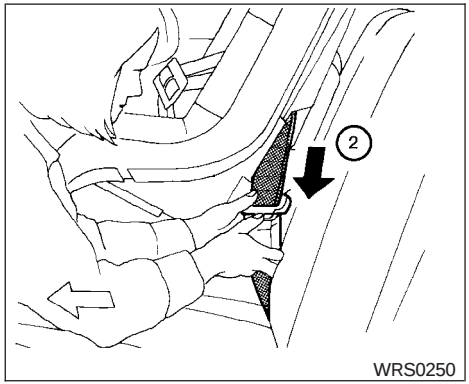

Front Facing — step 2

2. Route the seat belt tongue through the child restraint and insert it into the buckle until you hear and feel the latch engage.

   Be sure to follow the child restraint manufacturer's instructions for belt routing.

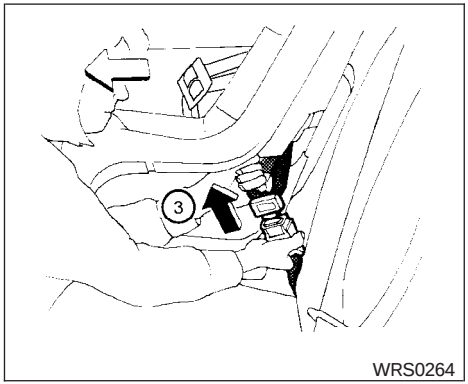

Front Facing — step 3

3. Remove all slack in the lap belt for a very tight fit by pulling forcefully on the lap belt adjustment.

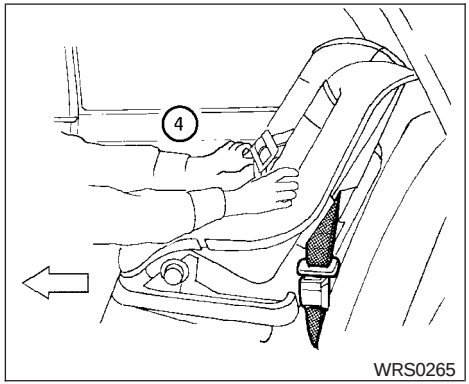

Front Facing — step 4

4. Before placing the child in the child restraint, use force to tilt the child restraint from side to side, and tug it forward to make sure it is securely in place. It should not move more than 1 inch (25mm).
5. If it is not secure, try to tighten the belt again, or put the restraint in another seat.
6. Check to make sure the child restraint is properly secured prior to each use.

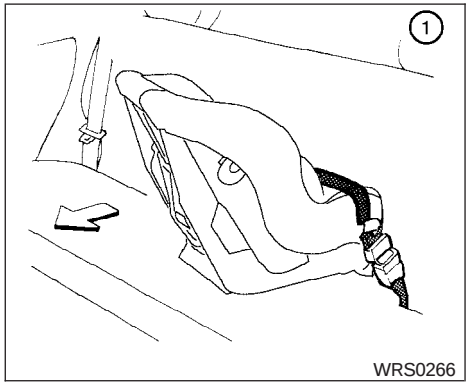

Rear Facing – step 1

Rear facing

When you install a child restraint in the rear center seat, follow these steps:

1. Position the child restraint on the seat as illustrated. Always follow the restraint manufacturer's instructions.

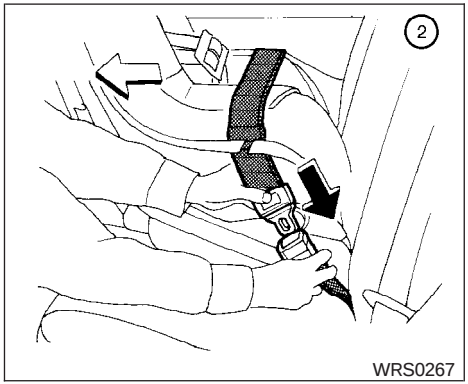

Rear Facing — step 2

2. Route the seat belt tongue through the child restraint and insert it into the buckle until you hear and feel the latch engage.

   Be sure to follow the child restraint manufacturer's instructions for belt routing.

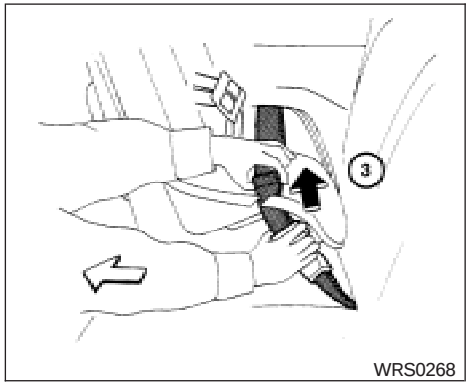

Rear Facing — step 3

3. Remove all slack in the lap belt for a very tight fit by pulling forcefully on the lap belt adjustment.

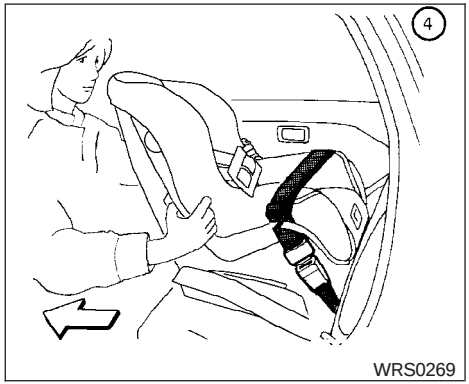

Rear Facing — step 4

4. Before placing the child in the child restraint, use force to tilt the child restraint from side to side, and tug it forward to make sure it is securely in place. It should not move more than 1 inch (25mm).
5. If it is not secure, try to tighten the belt again, or put the restraint in another seat.
6. Check to make sure the child restraint is properly secured prior to each use.

INSTALLATION ON REAR BENCH SEAT OUTBOARD POSITIONS (Crew Cab models only)

⚠ WARNING

- **The three-point belt in your vehicle is equipped with a locking mode retractor which must be used when installing a child restraint.**
- **Failure to use the retractor's locking mode will result in the child restraint not being properly secured. The restraint could tip over or otherwise be unsecured and cause injury to the child in a sudden stop or collision.**

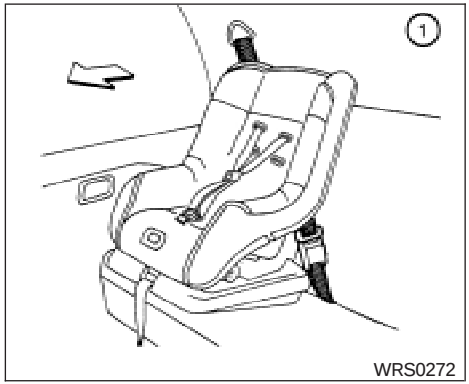

Front Facing — step 1

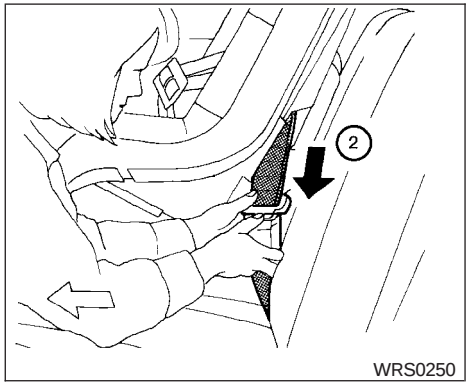

Front Facing — step 2

Front facing

When you install a child restraint in a rear outboard seat, follow these steps:

1. Position the child restraint on the seat. Always follow the restraint manufacturer's instructions.
2. Route the seat belt tongue through the child restraint and insert it into the buckle until you hear and feel the latch engage.

   Be sure to follow the child restraint manufacturer's instructions for belt routing.

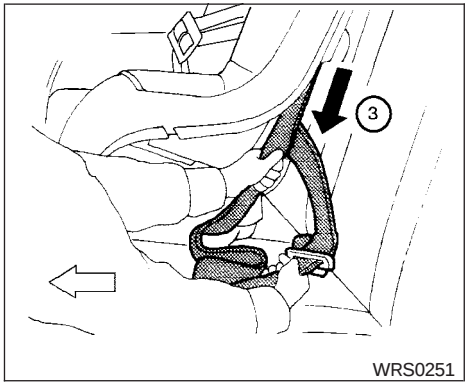

Front Facing — step 3

3. Pull on the shoulder belt until all of the belt is fully extended. At this time, the belt retractor is in the automatic locking mode (child restraint mode). It reverts back to emergency locking mode when the belt is fully retracted.

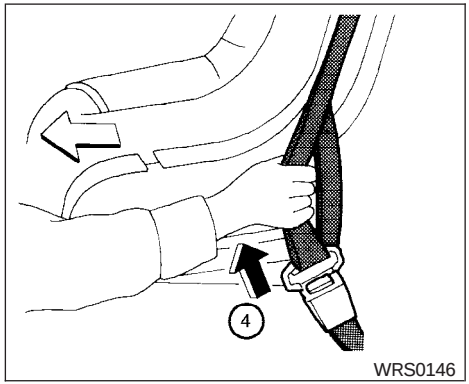

Front Facing — step 4

4. Allow the belt to retract. Pull up on the shoulder belt to remove any slack in the belt.

If necessary to ensure the child restraint is secure, pull the shoulder belt through the seat belt tongue beyond the stitching in the belt.

After the seat belt is fully retracted and the child restraint is removed from the seat, the stitching on the shoulder belt can be pulled back through the seat belt tongue. The stitching locates the seat belt tongue near the top of the seat back for easy access for rear seat passengers.

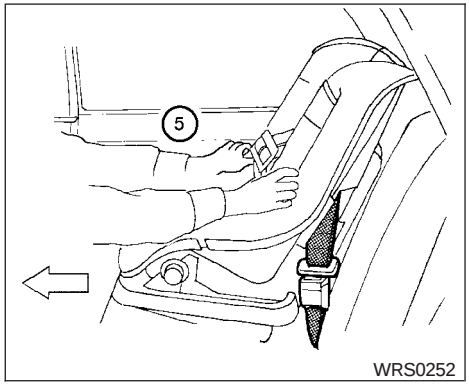

Front Facing — step 5

5. Before placing the child in the child restraint, use force to tilt the child restraint from side to side, and tug it forward to make sure it is securely held in place. It should not move more than 1 inch (25mm).
6. Check that the retractor is in the automatic locking mode by trying to pull more belt out of the retractor. If you cannot pull any more belt webbing out of the retractor, the retractor is in the automatic locking mode.
7. Check to make sure the child restraint is properly secured prior to each use. If the belt is not locked, repeat steps 3 through 6.

After the child restraint is removed and the seat belt is fully retracted, the automatic locking mode (child restraint mode) is canceled.

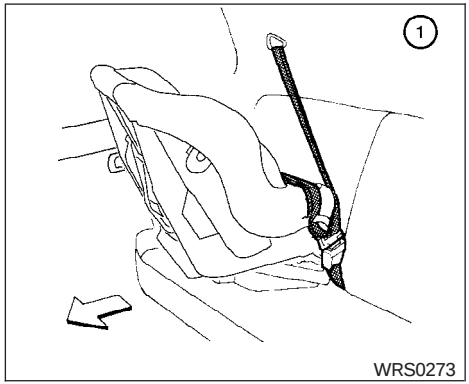

Rear Facing — step 1

Rear facing

When you install a child restraint in a rear outboard seat, follow these steps:

1. Position the child restraint on the seat. Always follow the restraint manufacturer's instructions.

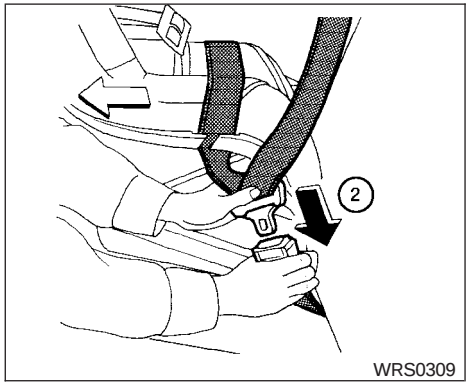

Rear Facing — step 2

2. Route the seat belt tongue through the child restraint and insert it into the buckle until you hear and feel it engage.

   Be sure to follow the child restraint manufacturer's instructions for belt routing.

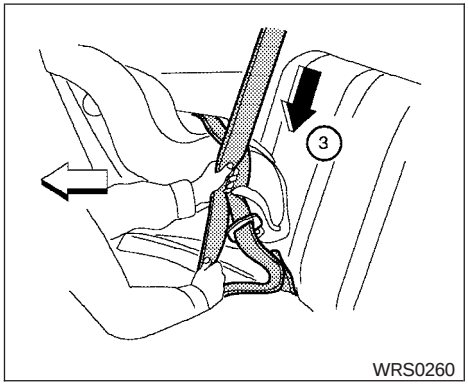

Rear Facing — step 3

3. Pull on the shoulder belt until all of the belt is fully extended. At this time, the belt retractor is in the automatic locking mode (child restraint mode). It reverts back to emergency locking mode when the seat belt is fully retracted.

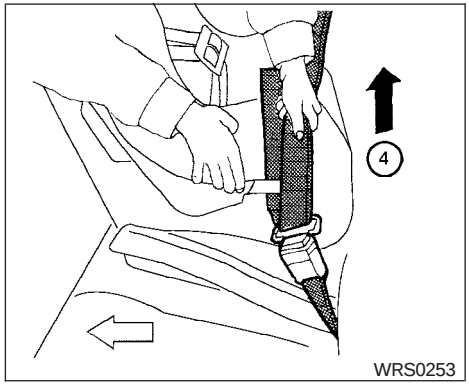

Rear Facing — step 4

4. Allow the belt to retract. Pull up on the shoulder belt to remove any slack in the belt.

If necessary to ensure the child restraint is secure, pull the shoulder belt through the seat belt tongue beyond the stitching in the belt.

After the seat belt is fully retracted and the child restraint is removed from the seat, the stitching on the shoulder belt can be pulled back through the seat belt tongue. This stitching locates the seat belt tongue near the top of the seat back for easy access for rear seat passengers.

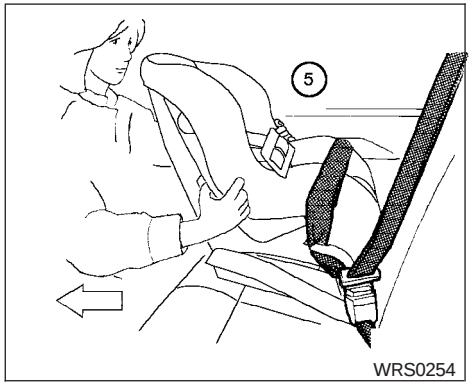

Rear Facing — step 5

5. Before placing the child in the child restraint, use force to tilt the child restraint from side to side, and tug it forward to make sure it is securely held in place. It should not move more than 1 inch (25mm).
6. Check that the retractor is in the automatic locking mode by trying to pull more belt out of the retractor. If you cannot pull any more belt webbing out of the retractor, the retractor is in the automatic locking mode.
7. Check to make sure the child restraint is properly secured prior to each use. If the belt is not locked, repeat steps 3 through 6.

After the child restraint is removed and the seat belt is fully retracted, the automatic locking mode (child restraint mode) is canceled.

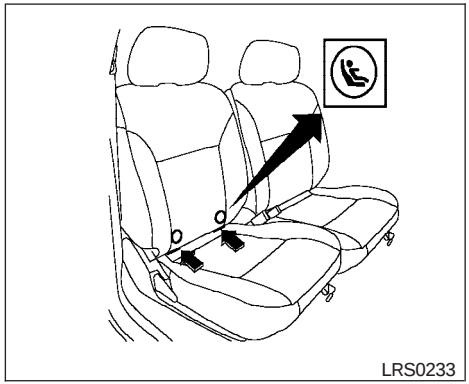

Passenger seat — King Cab (LATCH system anchor point location)

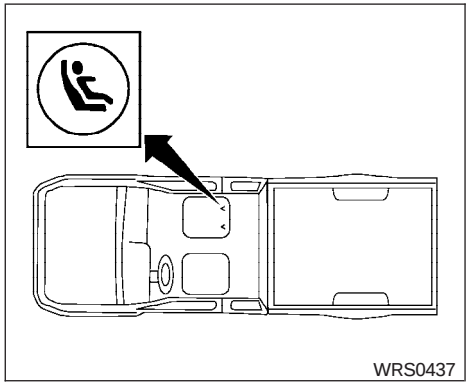

LATCH system anchor point location front passenger seat (King Cab)

LATCH (Lower Anchors and Tethers for CHildren) SYSTEM

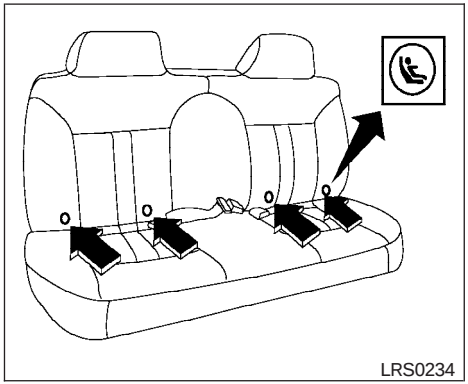

Rear seat — Crew Cab (LATCH system anchor point location)

⚠ WARNING

- **Attach LATCH system compatible child restraints only at the locations shown. If a child restraint is not secured properly, your child could be seriously injured or killed in an accident.**
- **Do not secure a child restraint in the center rear seating position (Crew Cab models) using the LATCH system anchors. The child restraint will not be secured properly.**

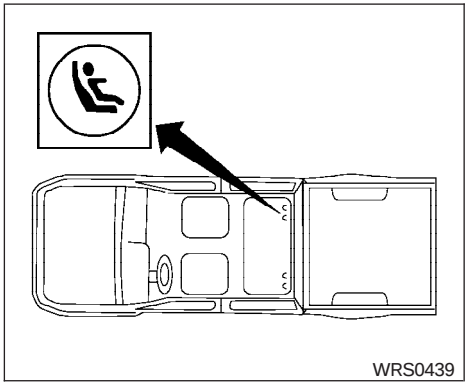

LATCH system anchor point locations rear bench seat (Crew Cab)

- **Follow all other instructions concerning proper installation of child restraints and the use of air bag ON/OFF switches (if so equipped) outlined in this manual.**
- **The LATCH system anchors are designed to withstand only those loads imposed by correctly fitted child restraints. Under no circumstance are they to be used for adult seat belts or harnesses.**

Some child restraints include two rigid or webbing-mounted attachments that can be connected to two anchors located at certain seating positions in your vehicle. This system is known as the LATCH (Lower Anchors and Tethers for CHildren) system. This system may also be referred to as the ISOFIX or ISOFIX compatible system. With this system, you do not have to use a vehicle seat belt to secure the child restraint. Your vehicle is equipped with special anchor points that are used with LATCH system compatible child restraints. Check your child restraint for a label stating that it is compatible with the LATCH system. This information may also be in the child restraint owner's manual. If you have such a child restraint, refer to the illustration for the seating positions equipped with LATCH system anchors which can be used to secure the child restraint.

The LATCH system anchors are located at the rear of the seat cushion near the seatback. A label is attached to the seat back to help you locate the LATCH system anchors.

LATCH child restraints generally require the use of a top tether strap. See "Top tether strap child restraint" later in this section for installation instructions.

When installing a child restraint, carefully read and follow the instructions in this manual and those supplied with the child restraint.

When you install a LATCH system compatible child restraint to the lower anchor attachments, follow these steps:

⚠ WARNING

Inspect the lower anchors by inserting your fingers into the lower anchor area and feeling to make sure there are no obstructions over the LATCH system anchors, such as seat belt webbing or seat cushion material. The child restraint will not be secured properly if the LATCH system anchors are obstructed.

1. To install the LATCH system compatible child restraint, insert the child restraint LATCH system anchor attachments into the anchor points on the seat. If the child restraint is equipped with a top tether, see "Top tether strap child restraint" later in this section for installation instructions.
2. After attaching the child restraint and before placing the child in it, use force to push the child restraint from side to side and tug it forward to make sure that the child restraint is securely held in place. It should not move more than 1 inch.
3. Check to make sure that the child restraint is properly secured prior to each use.

TOP TETHER STRAP CHILD RESTRAINT

If your child restraint has a top tether strap, it must be secured to the provided anchor point. Secure the child restraint with a seat belt. Secure the top tether strap to the anchor bracket which provides the straightest installation of the tether strap. Tighten the strap according to the manufacturer's instructions to remove any slack.

⚠ WARNING

Child restraint anchor points are designed to withstand only those loads imposed by correctly fitted child restraints. Under no circumstances are they to be used for adult seat belts or harnesses.

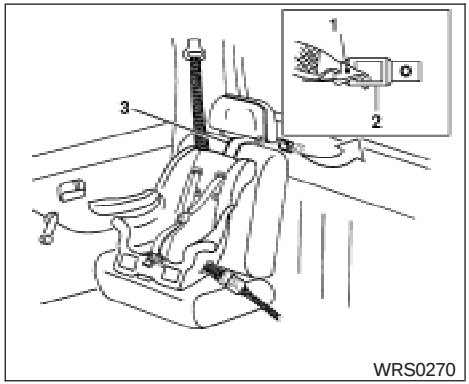

Front passenger seat (King cab only)

1. Hook
2. Anchor bracket
3. Top tether strap

Front passenger seat (King cab only)

First, secure the child restraint with the seat belt or the LATCH system (front passenger seat position only), as applicable.

Adjust the front passenger seat head restraint to its highest position and route the top tether strap between the head restraint and the top of the seatback. Secure the top tether strap to the

anchor point which provides the straightest installation of the tether strap as shown later in this section.

Tighten the tether strap according to the manufacturer's instructions to remove any slack.

For best child restraint fit, see the child restraint installation instructions in this section and the child restraint manufacturer's instructions.

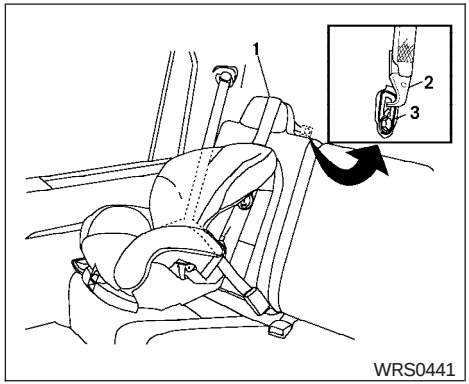

Rear bench seat (Crew cab only)

1. Top tether strap
2. Hook
3. Anchor bracket

Rear bench seat (Crew cab only)

First, secure the child restraint with the seat belt or the LATCH system (rear bench seat outboard positions only), as applicable.

Position the top tether strap over the head restraint and secure it to the tether anchor bracket that provides the straightest installation.

Tighten the strap according to the manufacturer's instructions to remove any slack.

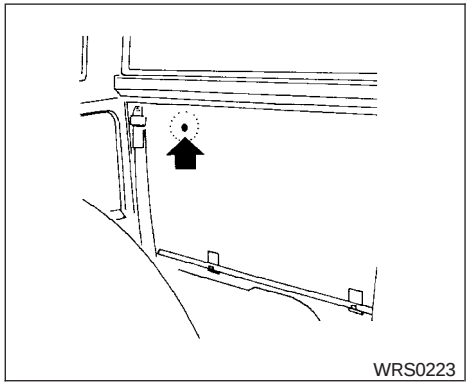

King Cab

Anchor point locations

Anchor points are located under the rear window. King Cab vehicles will only have the outer anchor point. Crew Cab vehicles will have all 3 anchor points.

If you have any questions when installing a top strap child restraint on the rear seat, consult your NISSAN dealer for details.

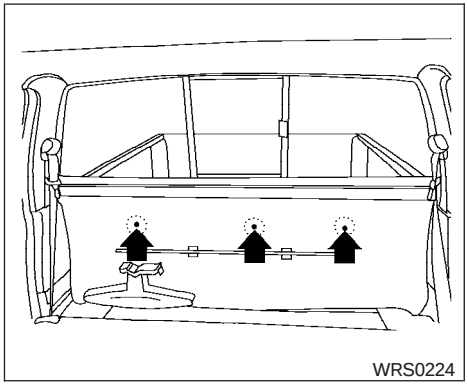

Crew Cab

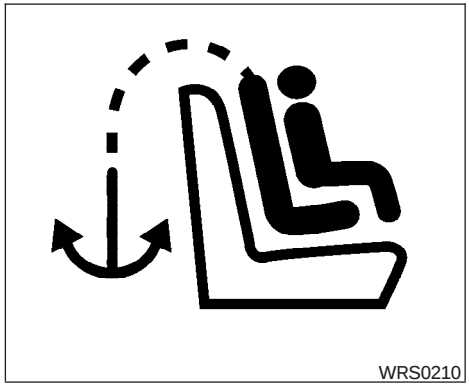

Flaps are provided in the carpet for easy access and are marked with the label shown (King Cab only).

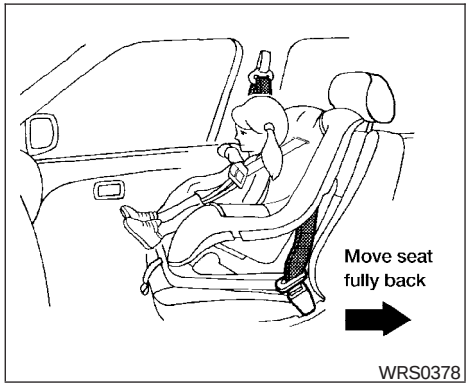

INSTALLATION ON FRONT PASSENGER SEAT

Front facing (Three-point type with retractor)

⚠ WARNING

- **If so equipped, keep the passenger supplemental air bag ON/OFF switch turned ON unless a rear-facing child restraint is used in the front seat. If the switch is OFF, the air bag will not inflate in a collision as designed.**

- **NISSAN recommends that the child restraint be installed in the rear seat (Crew Cab models). However, if you must install a forward-facing child restraint in the front passenger seat, move the passenger seat to the rearmost position.**
- **Never install a rear facing child restraint in the front seating position of Crew Cab models. Install a rear-facing child restraint in the rear seat only. The force of the inflating air bag could cause serious injury or kill the child in the child restraint.**
- **The three-point seat belt in your vehicle is equipped with an automatic locking mode retractor which must be used when installing a child restraint.**
- **Failure to use the retractor's locking mode will result in the child restraint not being properly secured. The restraint could tip over or otherwise be unsecured and cause injury to the child in a sudden stop or collision.**
- **If the supplemental air bag warning light located in the instrument panel next to the speedometer comes on when the passenger supplemental air bag OFF indicator light is also illuminated, something may be wrong with the supplemental air bag system. Do not use a child restraint in the front passenger seat until the system is checked by your NISSAN dealer.**

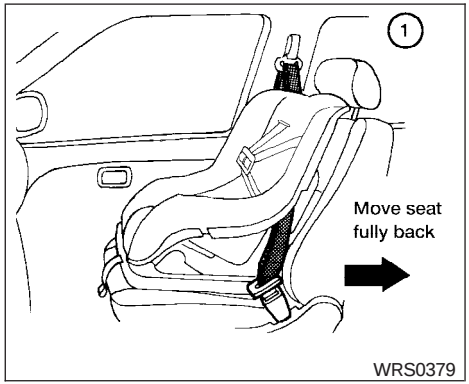

Front Facing — step 1

If you choose to install a child restraint in the front seat, follow these steps:

1. Position the child restraint on the front passenger seat. **Move the seat to the rearmost position.** Adjust the head restraint to its highest position. Always follow the restraint manufacturer's instructions.

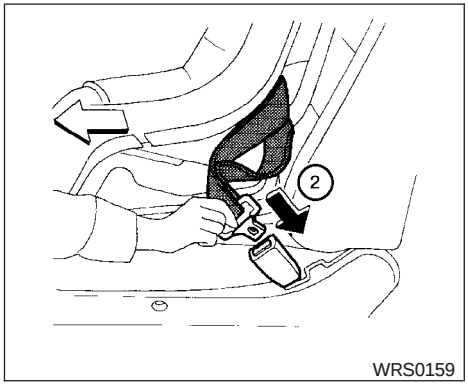

Front Facing — step 2

2. Route the seat belt tongue through the child restraint and insert it into the buckle until you hear and feel the latch engage.

   Be sure to follow the child restraint manufacturer's instructions for belt routing.

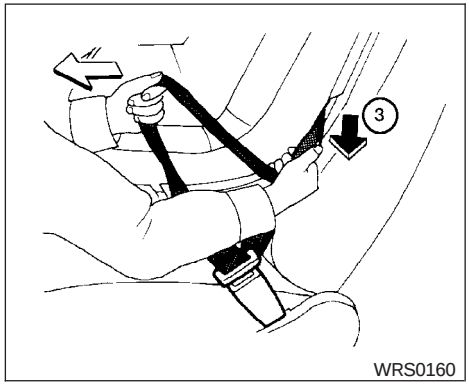

Front Facing — step 3

3. Pull on the shoulder belt until all of the belt is fully extended. At this time, the seat belt retractor is in the automatic locking mode (child restraint mode). It reverts to emergency locking mode when the seat belt is fully retracted.

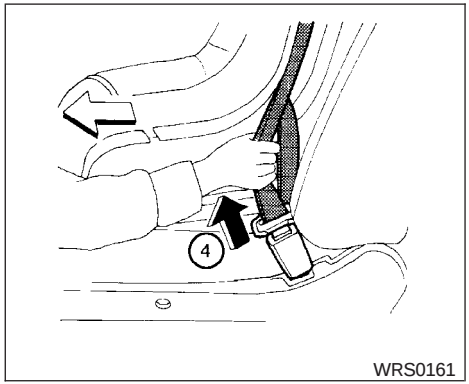

Front Facing — step 4

4. Allow the seat belt to retract slightly. Pull up on the shoulder belt to remove any slack in the belt.

If necessary to ensure the child restraint is secure, pull the shoulder belt through the seat belt tongue beyond the stitching in the belt.

After the seat belt is fully retracted and the child restraint is removed from the seat, the stitching on the shoulder belt can be pulled back through the seat belt tongue. The stitching locates the seat belt tongue near the top of the seat back for easy access for passengers.

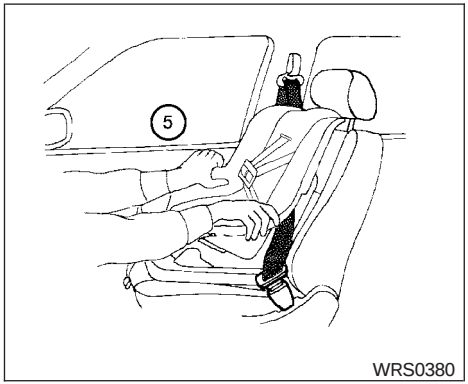

Front Facing — step 5

5. Before placing the child in the child restraint, use force to tilt the child restraint from side to side, and tug it for ward to make sure that it is securely held in place. It should not move more than 1 inch.
6. Check that the retractor is in the automatic locking mode by trying to pull more seat belt out of the retractor. If you cannot pull any more belt webbing out of the retractor, the seat belt is in the automatic locking mode.
7. Check to make sure the child restraint is properly secured prior to each use. If the seat belt is not locked, repeat steps 3 through 6.

After the child restraint is removed and the seat belt is fully retracted, the automatic locking mode (child restraint mode) is canceled.

Rear-facing (Three-point type with retractor, except Crew Cab models)

⚠WARNING

- **Never install a rear facing child restraint in the front seating position of Crew Cab models. Install a rear-facing child restraint in the rear seat only. The force of the inflating air bag could cause serious injury or kill the child in the child restraint.**
- **If so equipped, keep the passenger supplemental air bag ON/OFF switch turned ON unless a rear-facing child restraint is used in the front seat. If the switch is OFF, the air bag will not inflate in a collision as designed.**
- **Be sure to turn the passenger supplemental air bag ON/OFF switch OFF when using a rear facing child restraint in the front passenger seat. If it is not OFF, the air bag may inflate in a collision. The force of the rapidly inflating air bag could cause serious injury or kill the child in the child restraint. See "Passenger supplemental air bag ON/OFF switch and light" earlier in this section.**
- **If the supplemental air bag warning light located in the instrument panel next to the speedometer comes on when the passenger supplemental air bag OFF indicator light is also illuminated, something may be wrong with the supplemental air bag system. Do not use a child restraint in the front passenger seat until the system is checked by your NISSAN dealer.**
- **The passenger three-point seat belt is equipped with an automatic locking mode retractor which must be used when installing a child restraint.**

- **Failure to use the automatic locking mode will result in the child restraint not being properly secured. The restraint could tip over or otherwise be unsecured and cause injury to the child in a sudden stop or collision.**

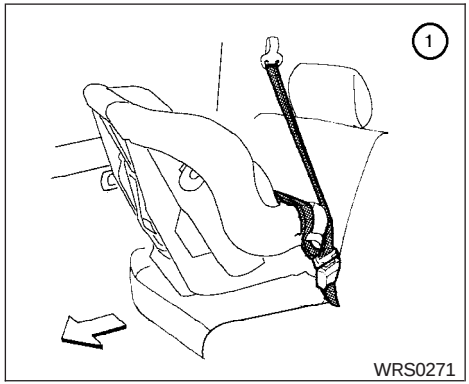

Rear Facing — step 1

If you choose to install a child restraint in the front seat, follow these steps:

1. Position the child restraint on the front passenger seat. **Move the seat to the rearmost position.** Always follow the child restraint manufacturer's instructions.

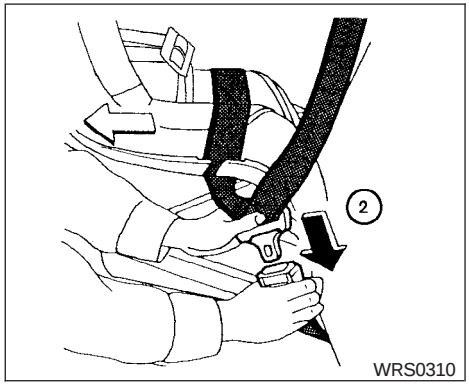

Rear Facing — step 2

2. Route the seat belt tongue through the child restraint and insert the belt tongue into the buckle until you hear and feel the latch engage.

   Be sure to follow the child restraint manufacturer's instructions for belt routing.

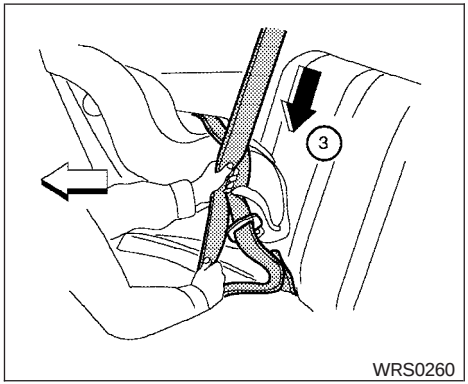

Rear Facing — step 3

3. Pull on the shoulder belt until all of the belt is fully extended. At this time, the seat belt retractor is in the automatic locking mode (child restraint mode). It reverts to emergency locking mode when the seat belt is fully retracted.

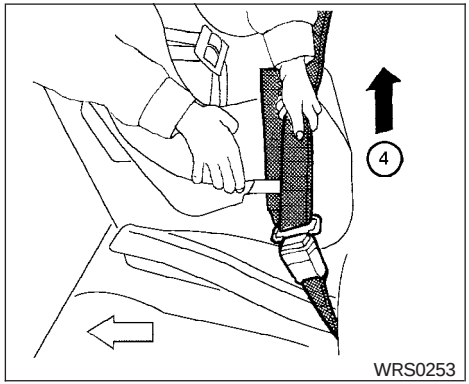

Rear Facing — step 4

4. Allow the belt to retract. Pull up on the belt to remove any slack in the belt.

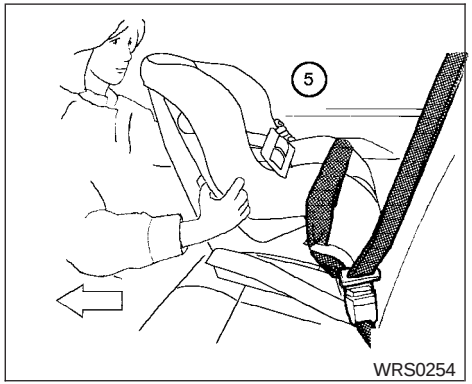

Rear Facing — step 5

5. Before placing the child in the child restraint, use force to tilt the child restraint from side to side, and tug it forward to make sure that it is securely held in place. It should not move more than 1 inch.
6. Ensure the retractor is in the automatic locking mode by trying to pull more seat belt out of the retractor. If you cannot pull any more belt webbing out of the retractor, the retractor is in the automatic locking mode.

7. Check to make sure the child restraint is properly secured prior to each use. If the lap belt is not locked, repeat steps 3 through 6.

After the child restraint is removed and the seat belt is fully retracted the automatic locking mode (child restraint mode) is canceled.

MEMO

2 Instruments and controls

Instrument panel 2-2
Meters and gauges 2-3
Speedometer and odometer 2-3
Tachometer 2-5
Engine coolant temperature gauge 2-5
Fuel gauge 2-6
Compass and outside temperature display (if so equipped) 2-6
Outside temperature display 2-7
Compass display 2-7
Warning/indicator lights and audible reminders 2-9
Checking bulbs 2-9
Warning lights 2-10
Indicator lights 2-13
Audible reminders 2-15
Security system (if so equipped) 2-16
Vehicle security system 2-16
Windshield wiper and washer switch 2-18
Switch operation 2-18
Rear window defroster switch (Crew Cab models only) 2-19
Headlight and turn signal switch 2-20
Headlight control switch 2-20
Daytime running light system (Canada only) 2-21
Instrument brightness control 2-21
Turn signal switch 2-22
Fog light switch (if so equipped) 2-22
Hazard warning flasher switch 2-22
Cargo lamp switch 2-23
Horn 2-23
Vehicle dynamic control (VDC) off switch (if so equipped) 2-24
Power outlet 2-24
Dual 12 volt power outlets (if so equipped) 2-25
Storage 2-26
Storage compartment 2-26
Storage trays (if so equipped) 2-26
Cup holders 2-27
Glove box 2-28
Console box 2-28
Grocery hooks (King Cab only) 2-29
Tubular roof rack (if so equipped) 2-30
Windows 2-32
Power windows (if so equipped) 2-32
Manual windows 2-34
Rear sliding window (if so equipped) 2-34
Interior lights 2-34
Map lights (if so equipped) 2-35

INSTRUMENT PANEL

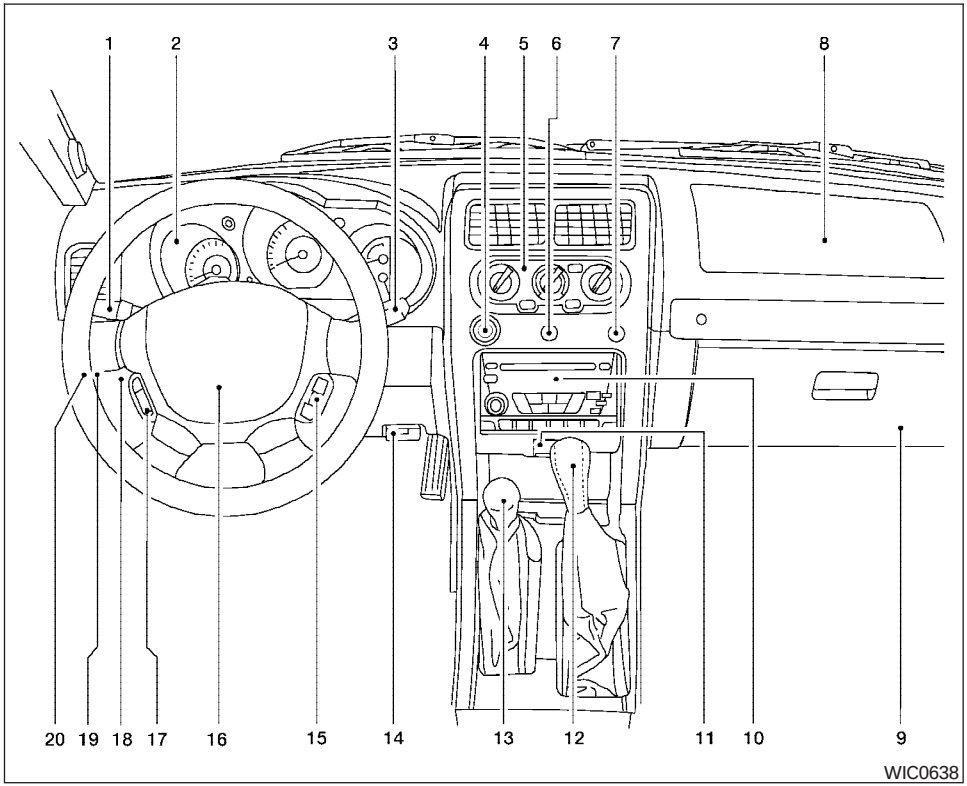

1. Headlight/turn signal switch (P. 2-20)
2. Meters and gauges (P. 2-3)
3. Windshield wiper/washer switch (P. 2-18)
4. Power outlet (P. 2-24)
5. Heater and air conditioner (P. 4-2)
6. Passenger air bag ON/OFF switch light (if so equipped) (P. 1-16)
7. Passenger air bag ON/OFF switch (if so equipped) (P. 1-16)
8. Front passenger supplemental air bag (P. 1-7)
9. Glove box (P. 2-28)
10. Audio system (P. 4-10)
11. Hazard warning flasher switch (P. 2-22)
12. Automatic/manual selector lever (P. 5-10)
13. Transfer case shift lever (if so equipped) (P. 5-21)
14. Parking brake release lever (P. 5-18)
15. Cruise control main/set switch (if so equipped) (P. 5-19)
16. Driver supplemental air bag/horn (P. 1-7, P. 2-23)
17. Steering wheel switch for audio controls (if so equipped) (P. 4-28)
18. Vehicle dynamic control (VDC) off switch (if so equipped) (P. 2-24)
19. Instrument brightness control (P. 2-21)
20. Cargo lamp switch (P. 2-23)

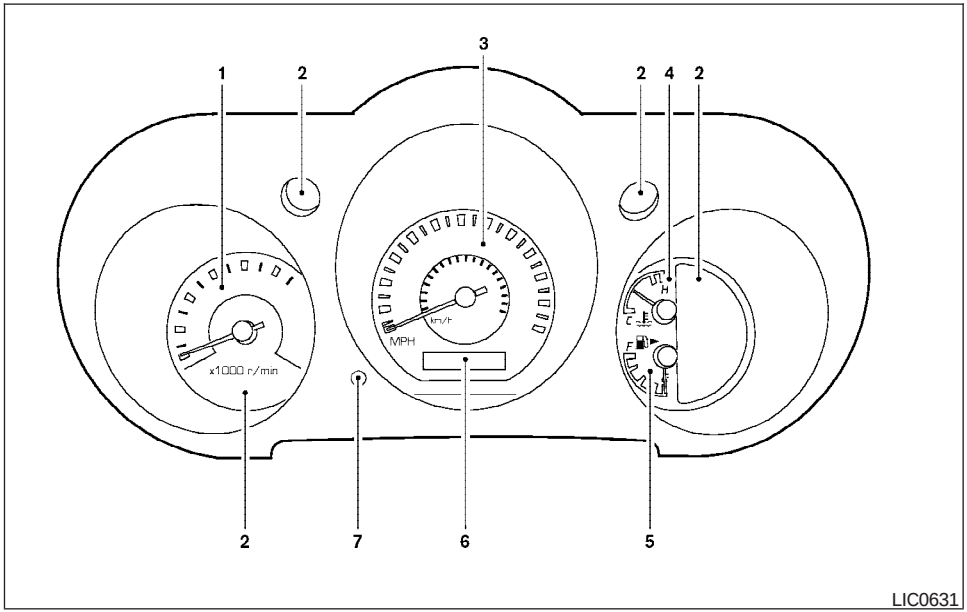

1. Tachometer
2. Warning/indicator lights
3. Speedometer
4. Engine coolant temperature gauge
5. Fuel gauge
6. Odometer/twin trip odometer
7. Change button

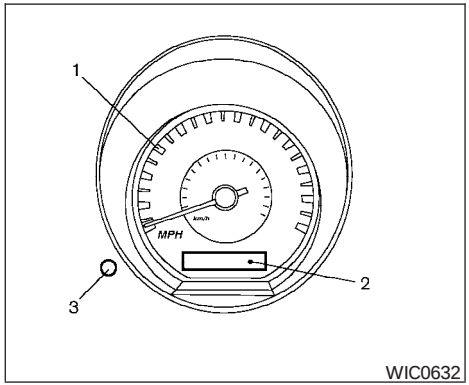

1. Speedometer
2. Odometer
3. Reset button

SPEEDOMETER AND ODOMETER

Speedometer

The speedometer indicates vehicle speed in miles per hour (MPH) and kilometers per hour (km/h).

Odometer/Twin trip

The odometer records the total distance the vehicle has been driven.

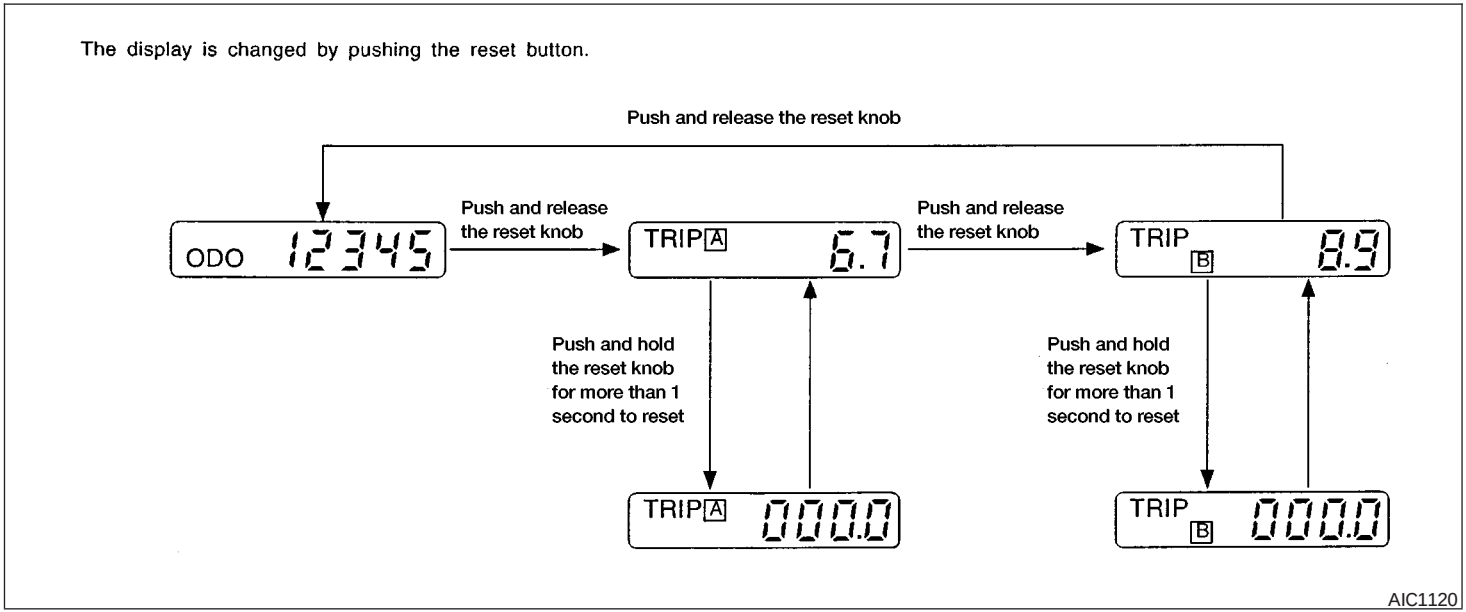

The trip odometer records the distance of individual trips. Before each trip reset the trip odometer.

Push the reset button to change the display as follows:

ODO (odometer) → TRIP A → TRIP B → ODO

Push and hold the reset button for more than 1 second to reset either trip odometer.

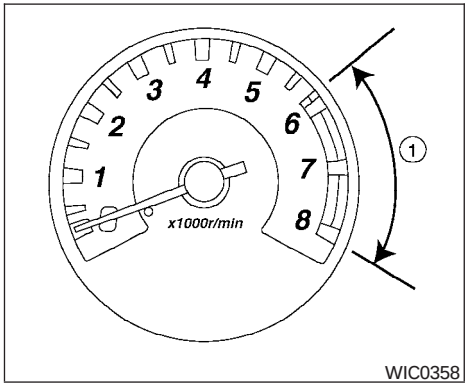

WIC0358

TACHOMETER

The tachometer indicates engine speed in revolutions per minute (r/min). The red zone ① is shown in the illustration.

⚠ CAUTION

When engine speed approaches the red zone, shift to a higher gear. Operating the engine in the red zone may cause serious engine damage.

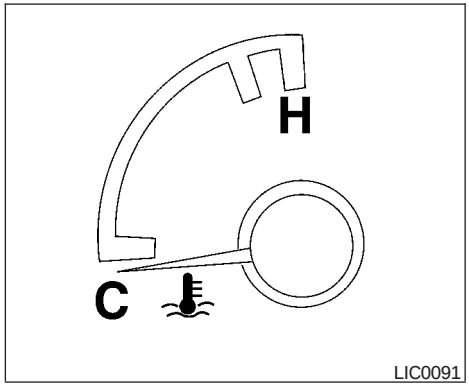

LIC0091

ENGINE COOLANT TEMPERATURE GAUGE

The gauge indicates the engine coolant temperature. The engine coolant temperature is within the normal range when the gauge needle points between the C and the H on the gauge.

The engine coolant temperature varies with the outside air temperature and driving conditions.

⚠ CAUTION

If the gauge indicates engine coolant temperature over the normal range, stop the vehicle as soon as safely possible. If the engine is overheated, continued operation of the vehicle may seriously damage the engine. See "If your vehicle overheats" in the "In case of emergency" section for immediate action required.

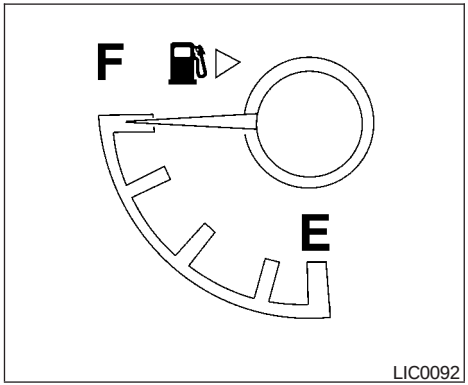

FUEL GAUGE

The gauge indicates the **approximate** fuel level in the tank.

The gauge may move slightly during braking, turning, acceleration, or going up or down hills.

The gauge needle returns to E (Empty) after the ignition key is turned to OFF.

The low fuel warning light comes on when the amount of fuel in the tank is getting low.

Refill the fuel tank before the gauge registers E (Empty).

The ⛽▷ indicates that the fuel filler lid is located on the passenger side of the vehicle.

⚠CAUTION

- **If the vehicle runs out of fuel, the SERVICE ENGINE SOON malfunction indicator lamp (MIL) may come on. Refuel as soon as possible. After a few driving trips, the SERVICE ENGINE SOON lamp should turn off. If the lamp remains on after a few driving trips, have the vehicle inspected by a NISSAN dealer.**
- **For additional information, see "Malfunction indicator lamp (MIL)" later in this section.**

COMPASS AND OUTSIDE TEMPERATURE DISPLAY (if so equipped)

This unit has the following functions:

- Measures terrestrial magnetism and indicates heading direction of vehicle
- Indicates outside air temperature

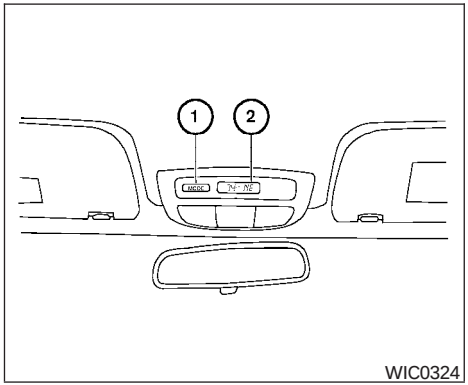

WIC0324

OUTSIDE TEMPERATURE DISPLAY

Push the MODE button ① when the ignition key is in the ON position. The outside temperature will be displayed ② in °F.

- Push the MODE button to change from °F to °C.
- **When the outside temperature is between 130°F (55°C) and 158°F (70°C), the display shows 130°F (55°C) .**
- **When the outside temperature is lower than -40°F (-40°C) or higher than 158°F (70°C), the display shows only — — — though it is operating. This is not a malfunction.**
- **The outside temperature sensor is located in front of the radiator. The sensor may be affected by road or engine heat, wind direction and other driving conditions. The display may differ from the actual outside temperature or the temperature displayed on various signs or billboards.**
- **Temperature display will not update unless the vehicle is moving faster than 12 mph (20 km/h), or the ignition switch has been OFF for 2 hours.**

COMPASS DISPLAY

Push the MODE button ① when the ignition key is in the ON position. The direction will be displayed ②.

Zone variation change procedure

The difference between magnetic north and geographical north is known as variance. In some areas, this difference can sometimes be great enough to cause false compass readings. Follow these instructions to set the variance for your particular location if this happens:

1. Establish your location on the zone map. Refer to the illustration. Record your zone number.
2. Turn the ignition switch to the ON position.
3. Push the MODE button in for 5 seconds until the current zone entry number and the “VAR” icon is displayed.
4. Press the MODE button repeatedly until the desired zone entry number is displayed.

Once the desired zone number is displayed, stop pressing the MODE button and the display will show compass direction within a few seconds.

NOTE:

Use zone number 5 for Hawaii.

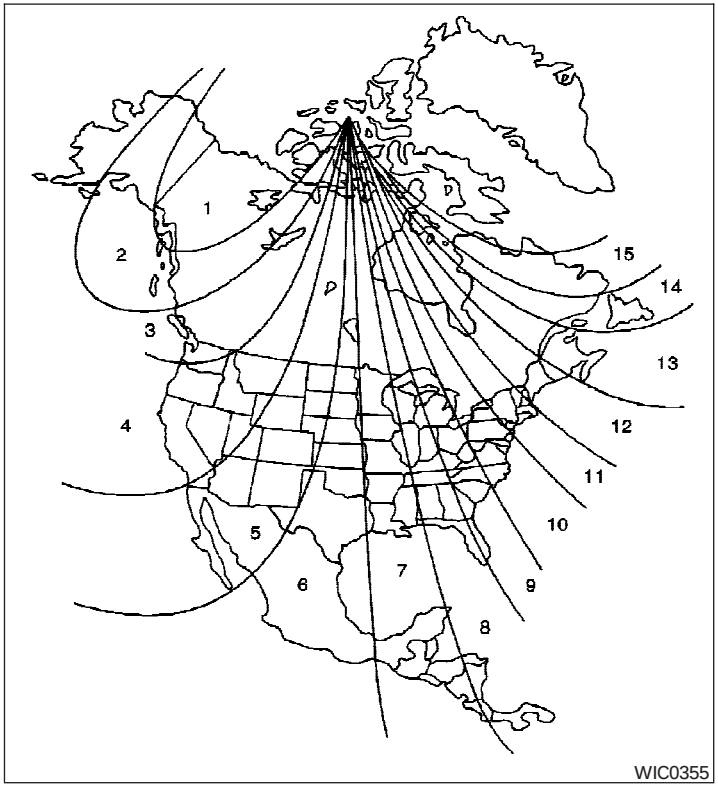

- **If a magnet is located near the compass or the vehicle is driven where the terrestrial magnetism is disturbed, the compass display may not indicate the correct direction.**
- **In places where the terrestrial magnetism is disturbed, the correction of the direction starts automatically.**

Correction functions of the compass display

The compass display is equipped with automatic correction function. If the direction is not shown correctly, carry out the manual correction procedure set out below.

Manual correction procedure

1. Push the MODE button for about 10 seconds. The “CAL” icon will illuminate.
2. Drive the vehicle slowly in an open and safe area. The initial correction is complete while turning in 1 or 2 turns.

In places where the earth’s magnetism is disturbed, the initial correction procedure may start automatically.

WARNING/INDICATOR LIGHTS AND AUDIBLE REMINDERS

ABS or	Anti-lock brake warning light		Low tire pressure warning light (if so equipped)		4-wheel drive indicator light (if so equipped)
A / T OIL TEMP	Automatic transmission oil temperature warning light (4x4 model)		Low windshield washer fluid warning light (if so equipped)		High beam indicator light (Blue)
ATP	Automatic transmission park warning light (4x4 model)		Passenger supplemental air bag OFF indicator light (except Crew Cab models)	SERVICE ENGINE SOON	Malfunction indicator lamp (MIL)
BRAKE or	Brake warning light		Seat belt warning light and chime	O/D OFF	Overdrive off indicator light (automatic transmission only)
	Charge warning light		Supplemental air bag warning light	SLIP	Slip indicator light (if so equipped)
	Door open warning light	CRUISE	CRUISE main switch indicator light (if so equipped)		Turn signal/hazard indicator lights
	Engine oil pressure warning light	SET	Cruise SET switch indicator light (if so equipped)	VDC OFF	Vehicle dynamic control off indicator light (if so equipped)
	Low fuel warning light				

CHECKING BULBS

With all doors closed, apply the parking brake and turn the ignition key to the ON position without starting the engine. The following lights will come on:

, BRAKE or , , SERVICE ENGINE SOON , A / T OIL TEMP

If the driver's seat belt is fastened before the ignition key is turned to the ON position, the light will not come on.

The following lights come on briefly and then go off:

ABS or , , , , SLIP, VDC OFF, , O/D OFF

If any light fails to come on, it may indicate a burned-out bulb or an open circuit in the electrical system. Have the system repaired promptly.

WARNING LIGHTS

ABS or (ABS) Anti-lock brake warning light

If the light comes on while the engine is running, it may indicate the anti-lock brake system is not functioning properly. Have the system checked by a NISSAN dealer.

If an abnormality occurs in the system, the anti-lock function ceases, but the regular braking system continues to operate.

If the light comes on while you are driving, contact a NISSAN dealer for repair.

A/T OIL TEMP Automatic transmission oil temperature warning light (4x4 model)

This light comes on when the automatic transmission oil temperature is too high. If the light comes on while driving, reduce the vehicle speed as soon as safely possible until the light turns off.

⚠ CAUTION

Continued vehicle operation when the A/T oil temperature warning light is on may damage the automatic transmission.

ATP Automatic transmission park warning light (4x4 model)

This light indicates that the automatic transmission parking function is not engaged. If the transfer control shift lever is not secured in any drive position while the automatic transmission selector lever is in the P (Park) position, the vehicle may move unexpectedly.

Shift the transfer control shift lever into the 2H, 4H, or 4L position when the warning light comes on.

- When parking, always make sure that the transfer control shift lever is in 2H, 4H, or 4L and the parking brake is set.
- If the ATP light is ON, this indicates that the automatic transmission P (Park) position will not function and the transfer control shift lever is in the N (Neutral) position.
- Failure to engage the transfer shift control lever in 2H, 4H or 4L could result in the vehicle moving unexpectedly, resulting in serious personal injury or property damage.

⚠ CAUTION

If the ATP light is ON, this indicates that the automatic transmission P (Park) position will not function and the transfer control shift lever is in the N (Neutral) position.

BRAKE or (!) Brake warning light

This light functions for both the parking brake and the foot brake systems.

When the ignition key is in the ON position, the light comes on when the parking brake is applied, and also warns of a low brake fluid level. If the light comes on while the engine is running with the parking brake not applied, stop the vehicle and perform the following:

1. Check the brake fluid level. Add brake fluid as necessary. See “Brake and clutch fluid” in the “Maintenance and do-it-yourself” section of this manual.

2. If the brake fluid level is correct, have the brake system checked by a NISSAN dealer.

⚠ WARNING

- **Your brake system may not be working properly if the warning light is on. Driving could be dangerous. If you judge it to be safe, drive carefully to the nearest service station for repairs. Otherwise, have your vehicle towed because driving it could be dangerous.**
- **Pressing the brake pedal with the engine stopped and/or a low brake fluid level may increase your stopping distance and braking will require greater pedal effort as well as pedal travel.**
- **If the brake fluid level is below the MINIMUM or MIN mark on the brake fluid reservoir, do not drive until the brake system has been checked at a NISSAN dealer.**

Charge warning light

If this light comes on while the engine is running, it may indicate the charging system is not functioning properly. Turn the engine off and check the generator belt. If the belt is loose, broken, missing, or if the light remains on, see a NISSAN dealer immediately.

⚠ CAUTION

Do not continue driving if the generator belt is loose, broken or missing.

Door open warning light

This light comes on when any of the doors are not closed securely while the ignition key is in the ON position.

Engine oil pressure warning light

This light warns of low engine oil pressure. If the light flickers or comes on during normal driving, pull off the road in a safe area, stop the engine **immediately** and call a NISSAN dealer or other authorized repair shop.

The engine oil pressure warning light is not designed to indicate a low oil level. Use the dipstick to check the oil level. See “Engine oil” in the “Maintenance and do-it-yourself” section of this manual.

⚠ CAUTION

Running the engine with the engine oil pressure warning light on could cause serious damage to the engine almost immediately. Such damage is not covered by warranty. Turn off the engine as soon as it is safe to do so.

Low fuel warning light

This light comes on when the fuel level in the fuel tank is getting low. Refuel as soon as it is convenient, preferably before the fuel gauge reaches E (Empty). **There will be a small reserve of fuel in the tank when the fuel gauge needle reaches E (Empty).**

Low tire pressure warning light (if so equipped)

After the ignition switch is turned ON, this light comes on for about 1 second and turns off.

This light warns of low tire pressure.

NISSAN’s low tire pressure warning system is a tire pressure monitoring system. It monitors tire pressure of all tires except the spare. When the tire pressure monitoring system warning light is lit, one or more of your tires is significantly underinflated. You should stop and check your tires as soon as possible, and inflate them to the proper

pressure as indicated on the vehicle's tire information placard. Driving on a significantly underinflated tire causes the tire to overheat and can lead to tire failure. Under-inflation also reduces fuel efficiency and tire tread life, and may affect the vehicle's handling and stopping ability. Each tire, including the spare, should be checked monthly when cold and set to the recommended inflation pressure as specified in the vehicle placard and owner's manual.

Low pressure warning

If the vehicle is being driven with very low tire pressure (lower than 28 psi, 193 kPa), the light will illuminate and the chime will sound for about 10 seconds.

For additional information, see "Low tire pressure warning system" in the "Starting and driving" section and "Low tire pressure warning system" in the "In case of emergency" section.

WARNING

- **If the light does not come on with the key switch turned ON, have the vehicle checked by a NISSAN dealer as soon as possible.**
- **If the light comes on while driving, avoid sudden steering maneuvers or abrupt braking, reduce vehicle speed, pull off the road to a safe location and stop the vehicle as soon as possible. Serious vehicle damage could occur and may lead to an accident and could result in serious personal injury. Check the tire pressure for all four tires. Adjust the tire pressure to the recommended COLD tire pressure shown on the tire placard to turn the low tire pressure warning light OFF. If the light still comes on while driving after adjusting the tire pressure, a tire may be flat. If you have a flat tire, replace it with a spare tire as soon as possible.**
- **When a spare tire is mounted or a wheel is replaced, tire pressure will not be indicated and the low tire pressure warning system will not function. Contact your NISSAN dealer as soon as possible for tire replacement and/or system resetting.**

CAUTION

- **The low tire pressure warning system is not a substitute for the regular tire pressure check. Be sure to check the tire pressure regularly.**
- **If the vehicle is being driven at speeds of less than 20 MPH (32 km/h), the low tire pressure warning system may not operate correctly.**
- **Be sure to install the specified size of tires to the 4 wheels correctly.**

Low windshield washer fluid warning light (if so equipped)

This light comes on when the windshield washer fluid is at a low level. Add windshield washer fluid as necessary. See "Window washer fluid" in the "Maintenance and do-it-yourself" section of this manual.

Passenger supplemental air bag OFF indicator light (except Crew Cab models)

The passenger supplemental air bag is equipped with an ON/OFF switch. The switch is located in the center of the instrument panel. When the switch is turned to the ON position, the passenger supplemental air bag is enabled and could

inflate in a frontal collision. When the switch is turned to the OFF position, the passenger supplemental air bag is disabled and will not inflate in a frontal collision. The passenger supplemental air bag OFF indicator light on the instrument panel illuminates when the passenger supplemental air bag ON/OFF switch is turned to the OFF position. The driver's side supplemental air bag always remains enabled and is not affected by the passenger supplemental air bag ON/OFF switch. The key for the passenger supplemental air bag ON/OFF switch should not be left in the switch. Remove the key after turning the switch in the desired position. Do not leave a key in the switch. See "Passenger supplemental air bag ON/OFF switch and light" in the "Seats, restraints and supplemental air bag systems" section for details.

Seat belt warning light and chime

The light and chime remind you to fasten your seat belts. The light illuminates whenever the ignition key is turned to the ON or START position and remains illuminated until the driver's seat belt is fastened. At the same time, the chime sounds for about 6 seconds unless the driver's seat belt is securely fastened.

Refer to "Seat belts" in the "Safety—Seats, seat belts and supplemental air bags" section for precautions on seat belt usage.

Supplemental air bag warning light

When the ignition key is in the ON or START position, the supplemental air bag warning light illuminates for about 7 seconds and then turns off. This means the system is operational.

If any of the following conditions occur, the supplemental air bag and pre-tensioner seat belt systems need servicing and your vehicle must be taken to a NISSAN dealer:

- The supplemental air bag warning light remains on after approximately 7 seconds.
- The supplemental air bag warning light flashes intermittently.
- The supplemental air bag warning light does not come on at all.

Unless checked and repaired, the supplemental restraint system (air bag system) and/or the pre-tensioner seat belts may not function properly. For additional details see "Supplemental restraint system" in the "Safety—Seats, seat belts and supplemental air bags" section of this manual.

WARNING

If the supplemental air bag warning light is on, it could mean that the supplemental front air bag or pre-tensioner seat belt systems will not operate in an accident. To help avoid injury to yourself or others, have your vehicle checked by a NISSAN dealer as soon as possible.

INDICATOR LIGHTS

Cruise main switch indicator light (if so equipped)

The light comes on when the cruise control main switch is pushed. The light goes out when the main switch is pushed again. When the cruise main switch indicator light comes on, the cruise control system is operational.

Cruise set switch indicator light (if so equipped)

The light comes on while the vehicle speed is controlled by the cruise control system. If the light blinks while the engine is running, it may indicate the cruise control system is not functioning properly. Have the system checked by a NISSAN dealer.

4–wheel drive indicator light (if so equipped)

This light comes on when the transfer shift control lever is in the 4H or 4L position.

WARNING

- **When parking always make sure the transfer control lever is in the 2H, 4H or 4L position and the parking brake is applied.**
- **Failure to engage the transfer control lever in 2H, 4H or 4L could result in the vehicle moving unexpectedly, which could cause serious personal injury or property damage.**

High beam indicator light (Blue)

This blue light comes on when the headlight high beams are on and goes out when the low beams are selected.

The high beam indicator light also comes on when the passing signal is activated.

Malfunction indicator lamp (MIL)

If this indicator lamp comes on steady or blinks while the engine is running, it may indicate a potential emission control malfunction.

The malfunction indicator lamp may also come on steady if the fuel filler cap is loose or missing, or if the vehicle runs out of fuel. Check to make sure the fuel filler cap is installed and closed tightly, and that the vehicle has at least 3 gallons of fuel in the fuel tank.

After a few driving trips, the SERVICE ENGINE SOON lamp should turn off if no other potential emission control system malfunction exists.

Operation

The malfunction indicator lamp will come on in one of two ways:

- Malfunction indicator lamp on steady — An emission control system malfunction has been detected. Check the fuel filler cap. If the fuel filler cap is loose or missing, tighten or install the cap and continue to drive the vehicle. The SERVICE ENGINE SOON lamp should turn off after a few driving trips. If the SERVICE ENGINE SOON lamp does not turn off after a few driving trips, have the vehicle inspected by a NISSAN dealer. You do not need to have your vehicle towed to the dealer.
- Malfunction indicator lamp blinking — An engine misfire has been detected which may damage the emission control system. To reduce or avoid emission control system damage:
  - do not drive at speeds above 45 MPH (72 km/h).
  - avoid hard acceleration or deceleration.
  - avoid steep uphill grades.
  - if possible, reduce the amount of cargo being hauled or towed.

The malfunction indicator lamp may stop blinking and come on steady. Have the vehicle inspected by a NISSAN dealer. You do not need to have your vehicle towed to the dealer.

CAUTION

Continued vehicle operation without having the emission control system checked and repaired as necessary could lead to poor driveability, reduced fuel economy, and possible damage to the emission control system.

O/D OFF Overdrive off indicator light (automatic transmission models only)

This light comes on when the overdrive function is OFF.

The automatic transmission overdrive function is controlled by the overdrive switch.

See “Driving the vehicle” in the “Starting and driving” section of this manual.

SLIP Slip indicator light (if so equipped)

This indicator light will blink when the traction control system is limiting wheel spin. Slippery road conditions may exist if the slip indicator blinks on. If this happens, adjust your driving accordingly.

The slip indicator light also comes on when you turn the ignition key to the ON position. The light will turn off after about 2 seconds if the system is operational. If the light does not come on or go off, have the traction control system checked by a NISSAN dealer.

The system operates in all transmission shift lever positions, but the system can upshift the transmission only as high as the indicated shift lever position.

Turn signal/hazard indicator lights

The appropriate light flashes when the turn signal switch is activated.

Both lights flash when the hazard switch is turned on.

VDC OFF Vehicle dynamic control off indicator light (if so equipped)

This indicator light comes on when the vehicle dynamic control off switch is pushed to OFF. This indicates the vehicle dynamic control system is not operating.

Push the vehicle dynamic control off switch again or restart the engine and the system will operate normally. See “Vehicle dynamic control (VDC) system” in the “Starting and driving” section of this manual.

The vehicle dynamic control light also comes on when you turn the ignition key to the ON position. The light will turn off after about 2 seconds if the system is operational. If the light stays on or comes on along with the SLIP indicator light while you are driving, have the vehicle dynamic control system checked by a NISSAN dealer.

While the vehicle dynamic control system is operating, you might feel slight vibration or hear the system working when starting the vehicle or accelerating, but this is normal.

AUDIBLE REMINDERS

Brake pad wear warning

The disc brake pads have audible wear warnings. When a brake pad requires replacement, it makes a high pitched scraping sound when the vehicle is in motion, whether or not the brake pedal is depressed. Have the brakes checked as soon as possible if the warning sound is heard.

Key reminder chime

A chime sounds if the driver’s door is opened while the key is left in the ignition switch. Remove the key and take it with you when leaving the vehicle.

Light reminder chime

With the ignition switch in the OFF position, a chime sounds when the driver’s door is opened if the headlights or parking lights are on.

Turn the headlight control switch off before leaving the vehicle.

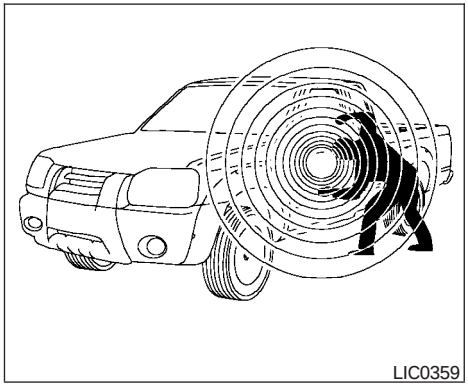

VEHICLE SECURITY SYSTEM

The vehicle security system provides visual and audio alarm signals if parts of the vehicle are disturbed.

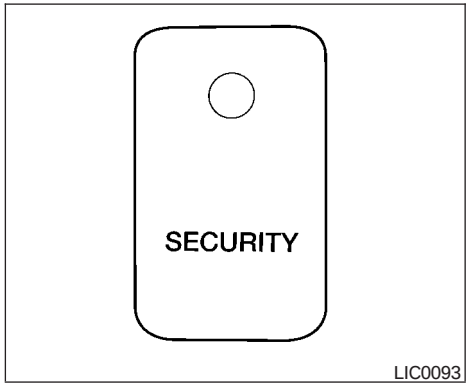

Security indicator light

The security indicator light shows the status of the vehicle security system.

The light operates whenever the ignition switch is in the LOCK, OFF, or ACC position.

The vehicle security system has four phases. For each phase the operation of the security indicator light is different.

Security indicator light operation

Phase	Security indicator light output
Disarmed	Blinks every 3.0 seconds
Pre-armed	Steady light for 30 seconds
Armed	Blinks every 3.0 seconds
Alarm activated/ Disarming alarm	No light

LIC0053

How to arm the vehicle security system

1. Close all windows. **(The system can be armed even if the windows are open.)**
2. Remove the key from the ignition switch.

3. Close the hood and all doors. Lock all doors. The doors can be locked with the key, power door lock switch or with the keyfob.

   Keyfob operation:

   - Push the button on the keyfob. All doors lock. The hazard lights flash twice and the horn beeps once to indicate all doors are locked.
   - When the button is pushed with all doors locked, the hazard lights flash twice and the horn beeps once as a reminder that the doors are already locked.

   The horn may or may not beep once. Refer to "Silencing the horn beep feature" later in this section.

   - If a door is open and you push the button the doors lock but the horn does not chirp and the hazard lights do not flash.

4. Confirm that the SECURITY indicator light comes on. The SECURITY light stays on for about 30 seconds. The vehicle security system is now pre-armed. After about 30 seconds the vehicle security system automatically shifts into the armed phase. The SECURITY light begins to flash once every 3 seconds. If, during the 30-second pre-arm time period, the door is unlocked by the key or the keyfob, or the ignition key is turned to ACC or ON, the system will not arm.

- **If the key is turned slowly when locking the door, the system may not arm. Furthermore, if the key is turned excessively to the unlock position, the system may be disarmed when the key is removed. If the indicator light fails to glow for 30 seconds, unlock the door once and lock it again.**
- **Even when the driver and/or passengers are in the vehicle, the system will arm with all doors and the hood closed and locked and the ignition key in the OFF position. Turn the ignition key to the ACC or ON to turn the security system off.**

Vehicle security system activation

The vehicle security system will give the following alarm:

- The headlights blink and the horn sounds intermittently. In addition, the starter motor does not operate.
- The alarm automatically turns off after about 50 seconds. However, the alarm reactivates if the vehicle is tampered with again. The alarm can be shut off by unlocking a door with the key, or by pressing the button on the keyfob.

The alarm is activated by:

- opening a door without using the key or keyfob (even if the door is unlocked by releasing the inside lock knob).
- opening the hood.

How to stop an activated alarm

The alarm stops only by unlocking a door with the key or by pressing the button on the keyfob.

The alarm does not stop if the ignition switch is turned to ACC or ON.

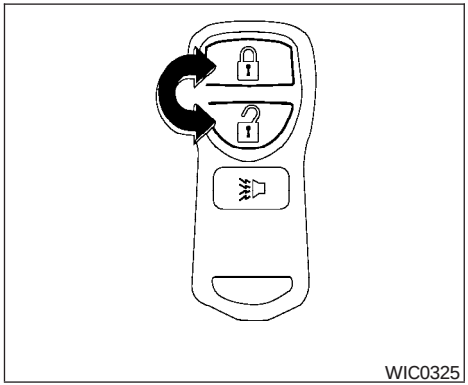

Silencing the horn beep feature

If desired, the horn beep feature can be deactivated using the keyfob.

To deactivate: Press and hold both the and buttons at the same time **for at least 2 seconds.**

The hazard lights will quickly flash 3 times to confirm that the horn beep feature has been deactivated.

To activate: Press and hold both the and buttons at the same time **for at least 2 seconds once more.**

The hazard lights will quickly flash once and the horn will sound once to confirm that the horn beep feature has been reactivated.

Deactivating the horn feature does not silence the horn if the alarm is triggered.

If the system does not operate as described above, have it checked by a NISSAN dealer.

WINDSHIELD WIPER AND WASHER SWITCH

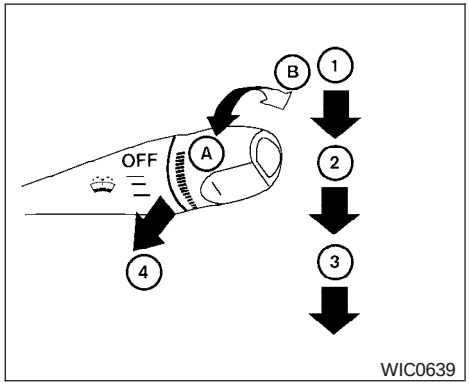

Type A

SWITCH OPERATION

The windshield wiper and washer operates when the ignition switch is in the ON position.

Push the lever down to operate the wiper at the following speed:

① Intermittent (if so equipped) — intermittent operation can be adjusted by turning the knob toward Ⓐ (Slower) or Ⓑ (Faster).

② Low — continuous low speed operation

③ High — continuous high speed operation

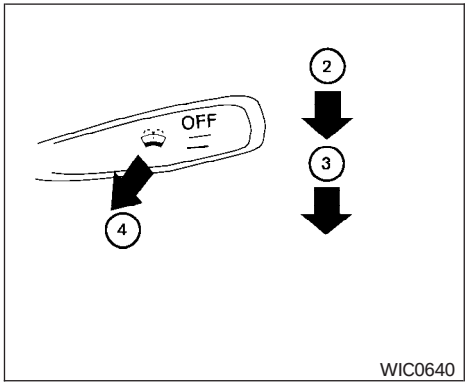

Type B

Pull the lever toward you ④ to operate the washer. The wiper will also operate several times.

⚠WARNING

In freezing temperatures the washer solution may freeze on the windshield and obscure your vision which may lead to an accident. Warm the windshield with the defroster before you wash the windshield.

⚠CAUTION

- **Do not operate the washer continuously for more than 30 seconds.**
- **Do not operate the washer if the reservoir tank is empty.**
- **Do not fill the window washer reservoir tank with washer fluid concentrates at full strength. Some methyl alcohol based washer fluid concentrates may permanently stain the grille if spilled while filling the window washer reservoir tank.**
- **Pre-mix washer fluid concentrates with water to the manufacturer's recommended levels before pouring the fluid into the window washer reservoir tank. Do not use the window washer reservoir tank to mix the washer fluid concentrate and water.**

REAR WINDOW DEFROSTER SWITCH (Crew Cab models only)

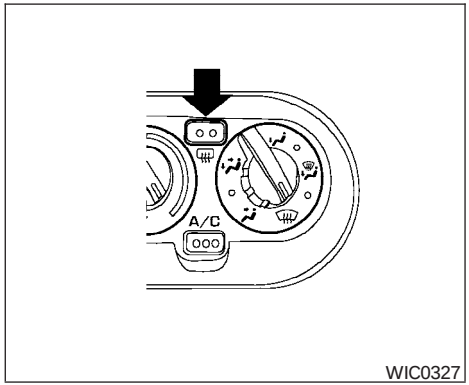

To defrost the rear window glass, start the engine and push the rear window defroster switch on. The rear window defroster indicator light on the switch comes on. Push the switch again to turn the defroster off.

The rear window defroster automatically turns off after approximately 15 minutes.

⚠CAUTION

When cleaning the inner side of the rear window, be careful not to scratch or damage the rear window defroster.

NOTE:

The top few rows of wires on the rear window are not part of the rear window defroster system. These wires make up the antenna for the audio system.

HEADLIGHT AND TURN SIGNAL SWITCH

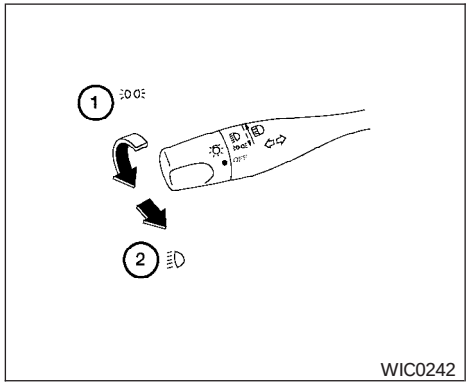

WIC0242

Type A

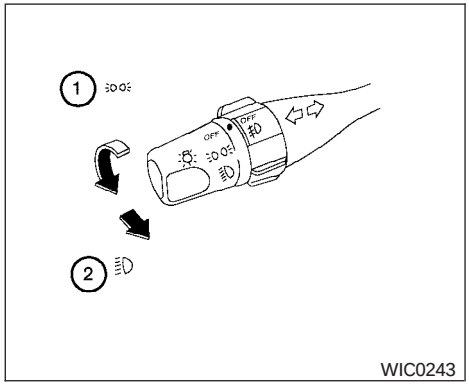

WIC0243

Type B

HEADLIGHT CONTROL SWITCH

Lighting

① When turning the switch to the position, the front parking, tail, license plate and instrument panel lights come on.

② When turning the switch to the position, the headlights come on and all the other lights remain on.

⚠ CAUTION

Use the headlights with the engine running to avoid discharging the vehicle battery.

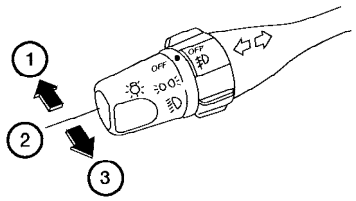

WIC0244

Headlight beam select

① To select the high beam function, push the lever forward. The high beam lights come on and the light illuminates.

② Pull the lever back to select the low beam.

③ Pulling and releasing the lever flashes the headlight high beams on and off.

DAYTIME RUNNING LIGHT SYSTEM (Canada only)

The headlights automatically illuminate at a reduced intensity when the engine is started with the parking brake released. The daytime running lights operate with the headlight switch in the OFF position or in the position. Turn the headlight switch to the position for full illumination when driving at night.

If the parking brake is applied before the engine is started, the daytime running lights do not illuminate. The daytime running lights illuminate when the parking brake is released. The daytime running lights will remain on until the ignition switch is turned off.

⚠ WARNING

When the daytime running light system is active, tail lights on your vehicle are not on. It is necessary at dusk to turn on your headlights. Failure to do so could cause an accident injuring yourself and others.

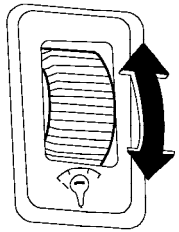

WIC0328

INSTRUMENT BRIGHTNESS CONTROL

The instrument brightness control operates when the headlight switch is in the or position.

Turn the control to adjust the brightness of instrument panel lights.

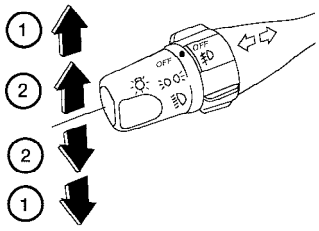

WIC0245

TURN SIGNAL SWITCH

Turn signal

① Move the lever up or down to signal the turning direction. When the turn is completed, the turn signals cancel automatically.

Lane change signal

② To signal a lane change, move the lever up or down to the point where the indicator light begins to flash, but the lever does not latch.

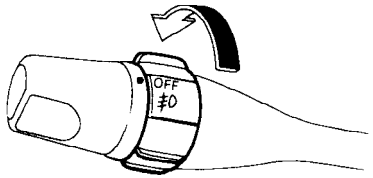

WIC0247

FOG LIGHT SWITCH (if so equipped)

To turn the front fog lights on, rotate the switch to the position.

To turn them off, rotate the switch to the OFF position.

The headlights must be on and the low beams selected for the fog lights to operate. The fog lights automatically turn off when the high beam headlights are selected.

HAZARD WARNING FLASHER SWITCH

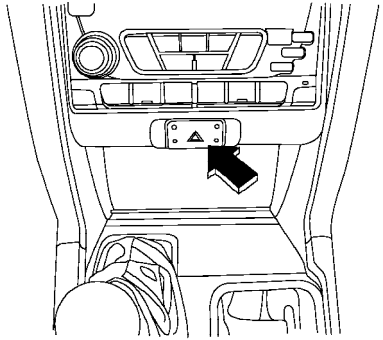
WIC0329

Push the switch on to warn other drivers when you must stop or park under emergency conditions. All turn signal lights flash.

⚠ WARNING

- **When stalled or stopped on the roadway under emergency conditions, move the vehicle well off the road.**
- **Do not use the hazard warning flashers while moving on the highway unless unusual circumstances force you to drive so slowly that your vehicle might become a hazard to other traffic.**

- **Turn signals do not work when the hazard warning flasher lights are on.**

The flashers will operate with the ignition switch in any position.

Some state laws may prohibit the use of the hazard warning flasher switch while driving.

CARGO LAMP SWITCH

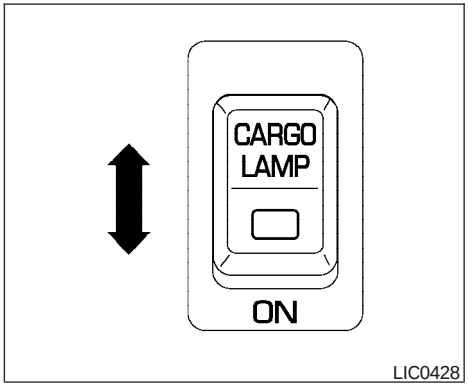

To turn on the cargo bed lamp, push the switch to the ON position when the ignition key is turned to the ACC, ON or START position. The indicator light in the switch will illuminate.

The cargo lamp will turn off if the switch is pushed to the off position or the ignition key is turned to the LOCK position.

HORN

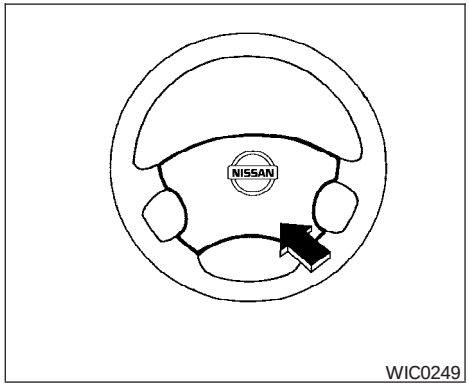

To sound the horn, push the center pad area of the steering wheel.

⚠ WARNING

Do not disassemble the horn. Doing so could affect proper operation of the supplemental front air bag system. Tampering with the supplemental front air bag system may result in serious personal injury.

VEHICLE DYNAMIC CONTROL (VDC) OFF SWITCH (if so equipped)

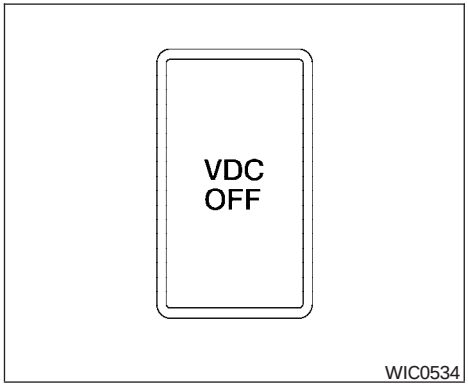

The vehicle should be driven with the Vehicle Dynamic Control (VDC) system on for most driving conditions.

If the vehicle is stuck in mud or snow, the VDC system reduces the engine output to reduce wheel spin. The engine speed will be reduced even if the accelerator is depressed to the floor. If maximum engine power is needed to free a stuck vehicle, turn the VDC system off.

To turn off the VDC system, push the VDC OFF switch. The VDC OFF indicator will come on.

Push the VDC OFF switch again or restart the engine to turn ON the system. See “Vehicle dynamic control (VDC) system” in the “Starting and driving” section.

POWER OUTLET

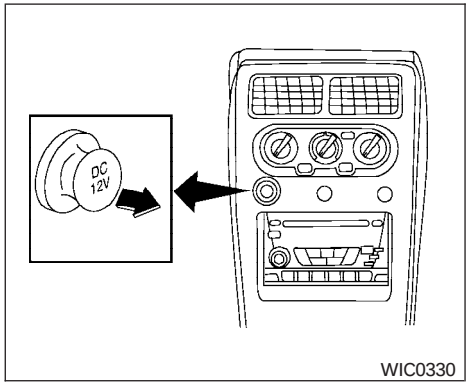

Front

The power outlets are for powering electrical accessories such as cellular telephones. They are rated at 12 volt, 120 W (10A) maximum.

⚠ CAUTION

- **The outlet and plug may be hot during or immediately after use.**
- **This power outlet is not designed for use with a cigarette lighter unit.**

DUAL 12 VOLT POWER OUTLETS (if so equipped)

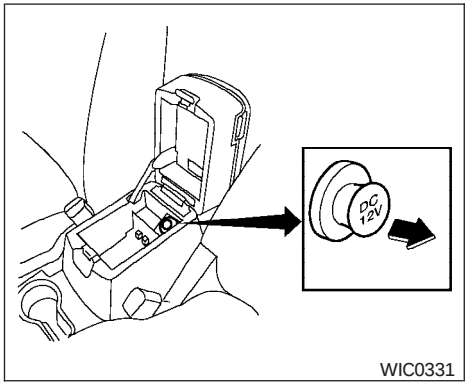

Console (if so equipped)

- **Do not use with accessories that exceed a 12 volt, 120W (10A) power draw. Do not use double adapters or more than one electrical accessory.**
- **Use power outlets with the engine running to avoid discharging the vehicle battery.**
- **Avoid using power outlets when the air conditioner, headlights or rear window defroster is on.**

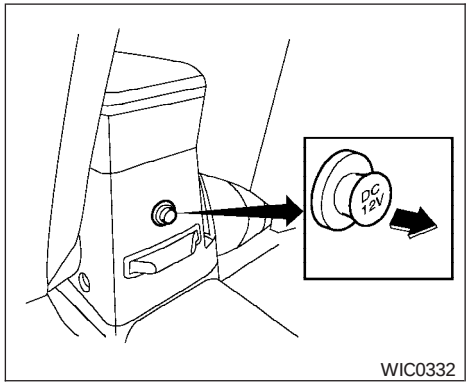

Rear (if so equipped)

- **Before inserting or disconnecting a plug, be sure the electrical accessory being used is turned OFF.**
- **Push the plug in as far as it will go. If good contact is not made, the plug may overheat or the internal temperature fuse may open.**
- **When not in use, be sure to close the cap. Do not allow water to contact the outlet.**

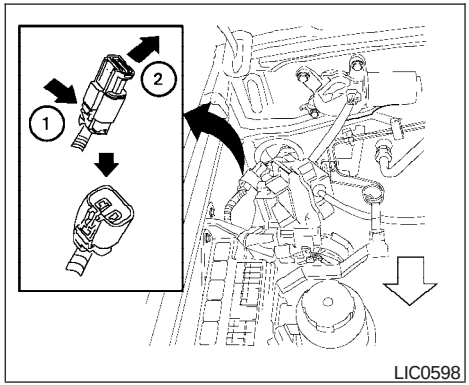

The dual 12 volt power outlets can be used to power optional add-on electrical devices.

To access the dual 12 volt power outlets, push in the tab ① and remove the cover ②.

The outlets are rated at 12 volt, 240W (20A) maximum.

⚠ CAUTION

- **Do not use with accessories that exceed a 12 volt, 240W (20A) power draw. Do not use double adapters or more than one electrical accessory.**

- **Use power outlets with the engine running to avoid discharging the vehicle battery.**
- **Avoid using power outlets when the air conditioner, headlights or rear window defroster is on.**

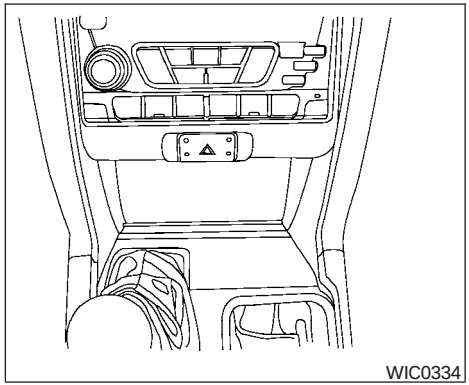

STORAGE COMPARTMENT

A storage compartment is located in the center bottom of the instrument panel.

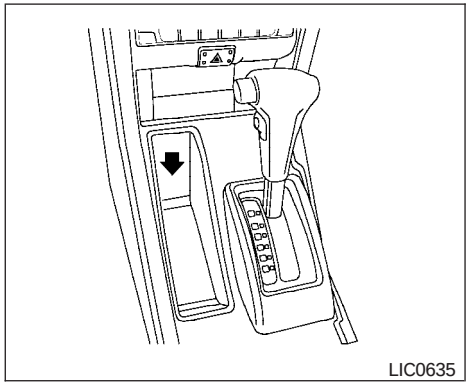

Automatic transmission model

STORAGE TRAYS (if so equipped)

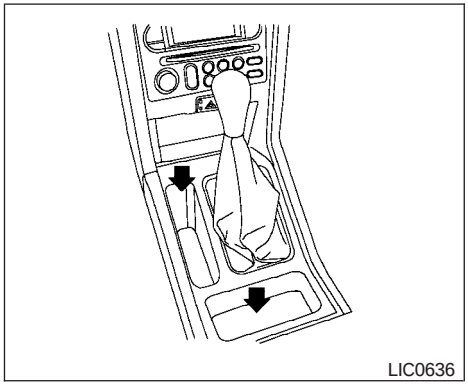

Manual transmission model

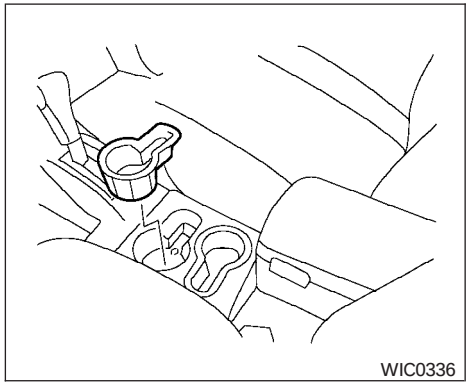

Front

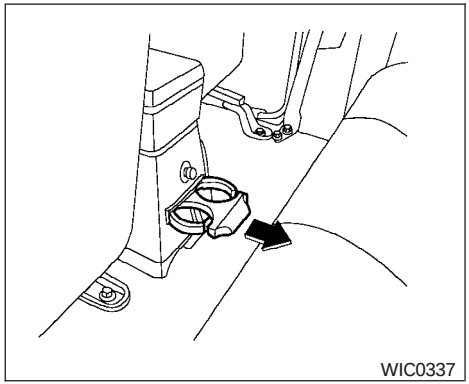

Rear — Crew Cab only

CUP HOLDERS

⚠ WARNING

The cup holder should not be used while driving so full attention may be given to vehicle operation.

⚠ CAUTION

- **Avoid abrupt starting and braking when the cup holder is being used to prevent spilling the drink. If the liquid is hot, it can scald you or your passenger.**
- **Use only soft cups in the cup holder. Hard objects can injure you in an accident.**

The front cup holders have a rubber insert that can be removed for cleaning and for using larger cups.

To open the rear cup holder (Crew Cab models only), pull out fully. To close, push the cup holder in fully.

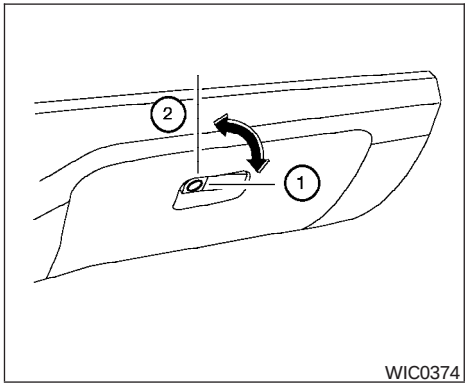

GLOVE BOX

Open the glove box by pulling the handle. When locking ① or unlocking ② the glove box, use the master key.

⚠WARNING

Keep glove box lid closed while driving to help prevent injury in an accident or a sudden stop.

CONSOLE BOX

⚠WARNING

The center console box should not be used while driving so full attention may be given to vehicle operation.

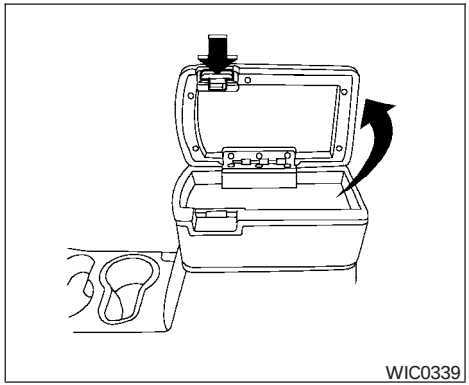

Upper half

Pull up on the lever to open the upper half of the console box. The rubber mat may be removed for cleaning.

The upper half of the console box may be used for storage of cellular phones. An access hole is provided at the bottom of the upper half of the console box for phone cord routing to the power outlet.

To route a phone cord to the power outlet:

1. Open the upper half of the console box.
2. Remove the rubber mat, and then remove the cutout area from the mat.

3. Remove the access hole cover.
4. Install the rubber mat.
5. Route the phone cord through the access hole and plug into the power outlet.

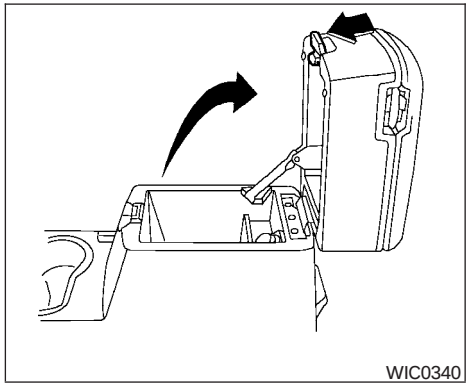

Lower half

Pull up on the lever to open the lower half of the console box. A power outlet is located inside the console box and there is storage for compact discs.

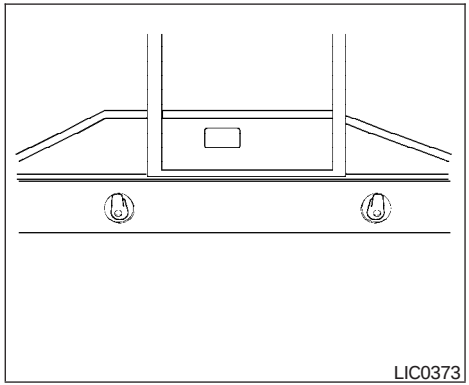

GROCERY HOOKS (King Cab only)

The grocery hooks allow for 2 standard size plastic grocery bags to hang side by side.

Do not apply a total load of more than 55 lbs (25 kg) to a single grocery hook.

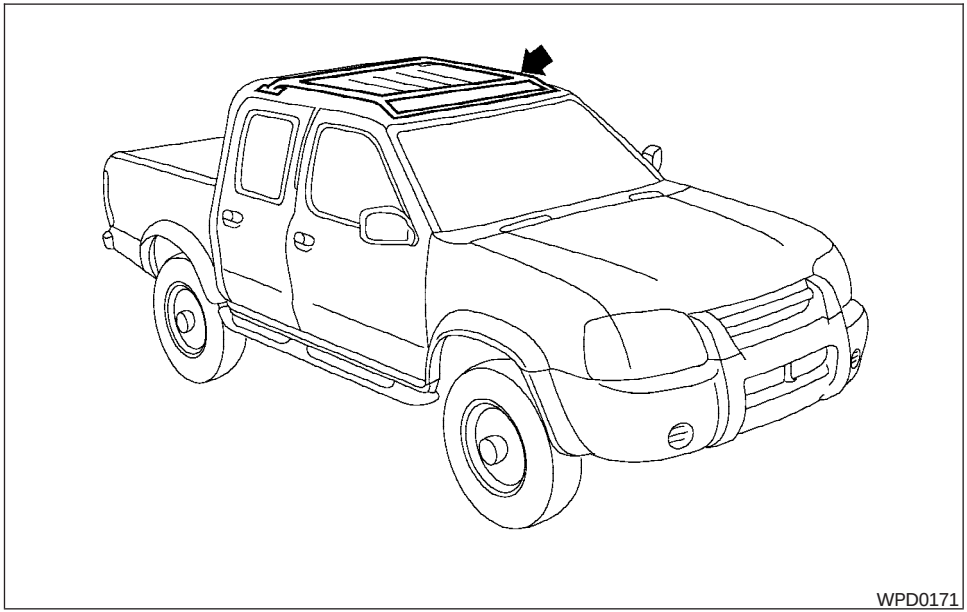

TUBULAR ROOF RACK (if so equipped)

Always evenly distribute the cargo on the tubular roof rack. **The maximum total load is 125 lb (57 kg) evenly distributed.** Be careful that your vehicle does not exceed the Gross Vehicle Weight Rating (GVWR) or the Gross Axle Weight Ratings (GAWR front and rear). The GVWR and GAWR are located on the Safety Compliance Certification Label (located on the driver's side door jamb pillar). For more information regarding GVWR and GAWR, refer to the "Technical and consumer information" section of this manual.

⚠ WARNING

Properly secure all cargo with ropes or straps to help prevent it from sliding or shifting. In a sudden stop or collision, unsecured cargo could cause personal injury.

⚠ CAUTION

Use care when placing or removing items from the roof rack. If you cannot comfortably lift the items onto the roof rack from the ground, use a ladder or stool.

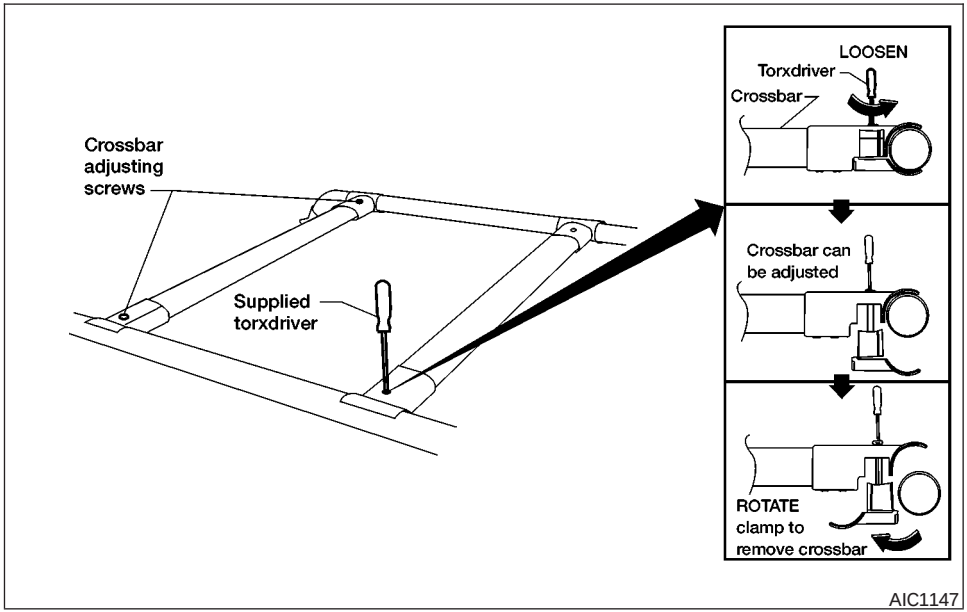

Tubular roof rack crossbar adjustment

The front and rear crossbars can be adjusted forward, backward, or be removed. Use the Torxdriver located in the tool kit to loosen both crossbar adjusting screws.

To adjust:

1. Loosen the adjusting screws with the Torxdriver by turning counterclockwise.
2. When the clamp is loosened, move the crossbars so the cargo can be positioned on the crossbars.
3. Tighten the crossbar adjusting screws with the Torxdriver by turning clockwise.
4. Secure the cargo with rope.
5. Always check the tightness of the crossbar adjusting screws.

To remove:

1. Loosen the adjusting screws with the Torxdriver by turning counterclockwise.
2. Rotate the clamps.
3. Remove the crossbars.
4. Reverse to install.
5. Always check the tightness of the crossbar adjusting screws.

If you hear wind noise coming from the roof rack while driving, adjust the roof rack crossbars to the most rearward position.

POWER WINDOWS (if so equipped)

⚠ WARNING

- **Make sure that all passengers have their hands, etc. inside the vehicle while it is in motion and before closing the windows. Use the window lock switch to prevent unexpected use of the power windows.**
- **Do not leave children unattended inside the vehicle. They could unknowingly activate switches or controls and become trapped in a window. Unattended children could become involved in serious accidents.**

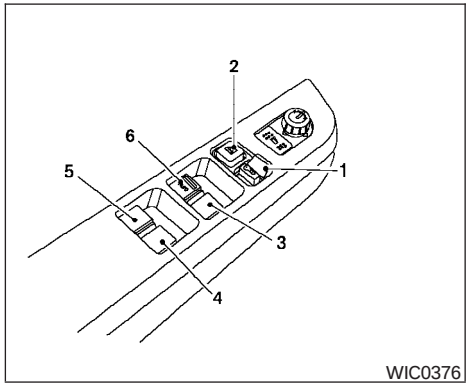

1. Door lock/unlock button
2. Window lock button
3. Front passenger side
4. Right rear passenger side (Crew Cab models only)
5. Left rear passenger side (Crew Cab models only)
6. Driver side automatic switch

Driver's side power window switch

The driver's side control panel is equipped with switches to open or close all of the windows.

The power windows operate when the ignition switch is in the ON position, or for about 45 seconds after the ignition switch is turned to the OFF position. If the driver's or passenger's door is opened during this period of about 45 seconds, power to the windows is canceled. To open a window, push the switch and hold it down. To close a window, pull the switch up. To stop the opening or closing function at any time, simply release the switch.

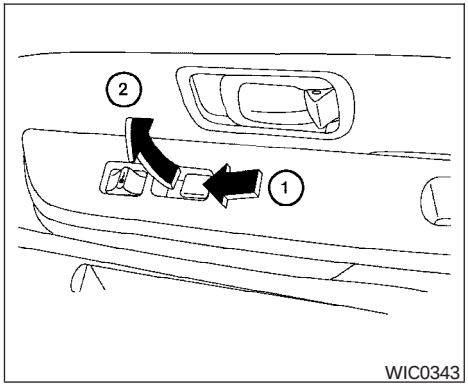

Front passenger power window switch

The passenger window switch operates only the corresponding passenger window. To open the window, push the switch and hold it down ①. To close the window, pull the switch up ②.

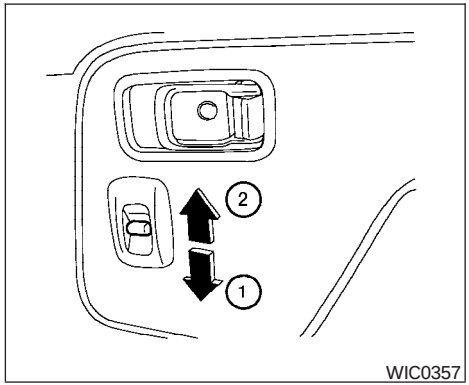

Rear power window switch (Crew Cab models only)

The rear power window switches open or close only the corresponding window. To open the window, push the switch and hold it down ①. To close the window, push the switch up ②.

Locking passengers' windows

When the window lock button is depressed, only the driver side window can be opened or closed. Push it again to cancel the window lock function.

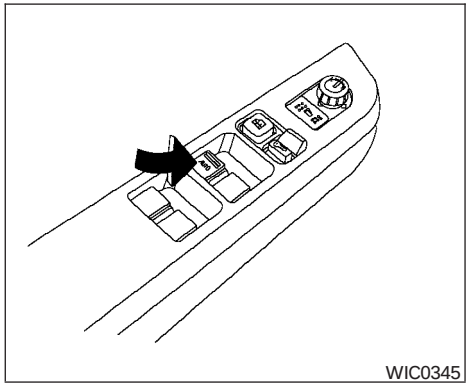

Automatic operation

To fully open the driver window, press the driver window switch down to the second detent and release it; it need not be held. The window automatically opens all the way. To stop the window, lift the switch up while the window is opening.

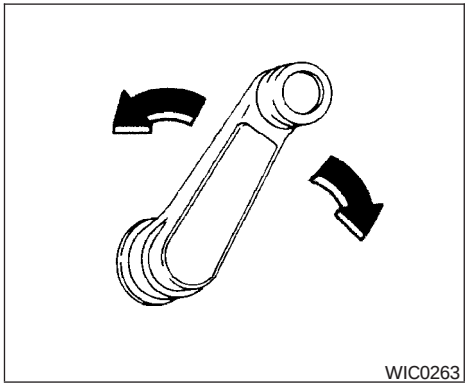

MANUAL WINDOWS

The side windows can be opened or closed by turning the hand crank on each door.

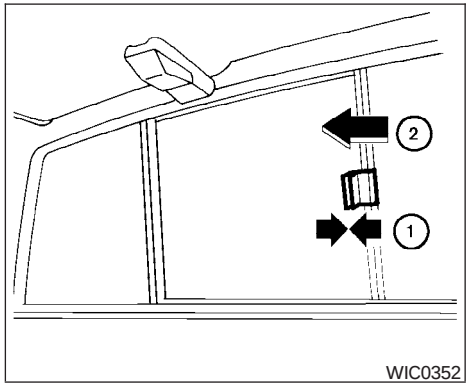

REAR SLIDING WINDOW (if so equipped)

Squeeze the handles of the lever ①, then slide the window open ②.

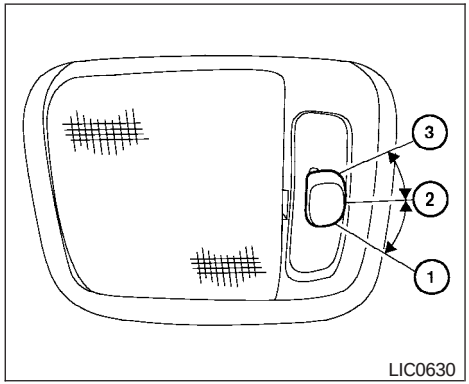

Dome light — Type A

The interior light has a three-position switch and operates regardless of ignition switch position.

When the switch is in the ON position ①, the interior light illuminates, regardless of door position. The light will go off after about 30 minutes unless the ignition key is in the ACC or ON position.

When the switch is in the normal operation position ②, the interior light will stay on for about 30 seconds when:

- The doors are unlocked by the keyfob, the power door lock switch, or a key (when equipped with vehicle security system) while

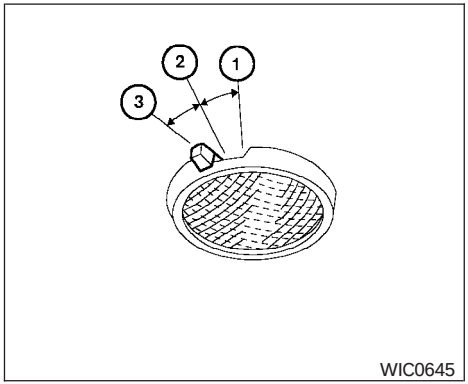

Dome light — Type B

all doors are closed and the ignition switch is in the LOCK or OFF position.

- The driver's door is opened and then closed while the key is removed from the ignition switch.
- The key is removed from the ignition switch while all doors are closed.

The light will turn off while the 30 second timer is activated when:

- The driver's door is locked by the keyfob, the power door lock switch, or a key (when equipped with vehicle security system).
- The ignition switch is turned ON.

When the switch is in the OFF position ③, the interior light will not illuminate, regardless of door position.

The light will turn off automatically after 30 minutes while doors are open to prevent the battery from becoming discharged.

⚠ CAUTION

Do not use for extended periods of time with the engine stopped. This could result in a discharged battery.

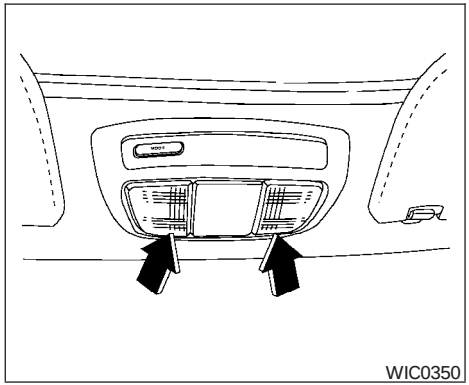

To turn the map lights on, press the switches. To turn them off, press the switches again.

⚠ CAUTION

Do not use for extended periods of time with the engine stopped. This could result in a discharged battery.

MEMO

3 Pre-driving checks and adjustments

Keys 3-2
Doors 3-2
Locking with key. 3-2
Locking with inside lock knob 3-3
Locking with power door lock switch (if so equipped) 3-3
Child safety rear door lock (Crew Cab models only) 3-4
Remote keyless entry system (if so equipped). 3-4
How to use remote keyless entry system 3-5
Battery replacement 3-8
Hood 3-9
Tubular step rail (if so equipped) 3-10
Fuel filler lid 3-11
Fuel filler cap. 3-11
Steering wheel 3-12
Tilt operation (if so equipped) 3-12
Sun visors 3-13
Vanity mirror (if so equipped). 3-13
Mirrors 3-13
Inside mirror 3-13
Outside mirrors 3-13
Outside mirror remote control (if so equipped) 3-14
Truck box 3-15
Tailgate. 3-15
Tie down hooks 3-17

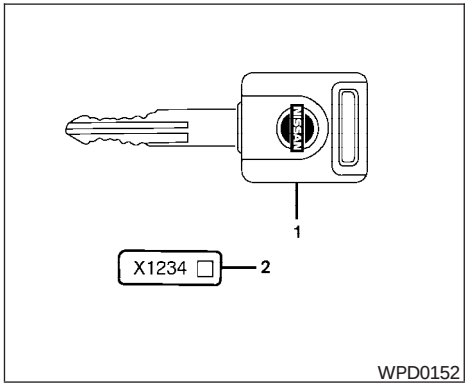

1. Two master keys (black) with chrome NISSAN brand symbol on one side
2. Key number plate

A key number plate is supplied with your keys. Record the key number and keep it in a safe place (such as your wallet), not in the vehicle. If you lose your keys, see a NISSAN dealer for duplicates by using the key number. NISSAN does not record key numbers so it is very important to keep track of your key number plate.

A key number is only necessary when you have lost all keys and do not have 1 to duplicate from. If you still have a key, this key can be duplicated by a NISSAN dealer or locksmith.

⚠ WARNING

- **Always have the doors locked while driving. Along with the use of seat belts, this provides greater safety in the event of an accident by helping to prevent persons from being thrown from the vehicle. This also helps keep children and others from unintentionally opening the doors, and will help keep out intruders.**
- **Before opening any door, always look for and avoid oncoming traffic.**
- **Do not leave children unattended inside the vehicle. They could unknowingly activate switches or controls. Unattended children could become involved in serious accidents.**

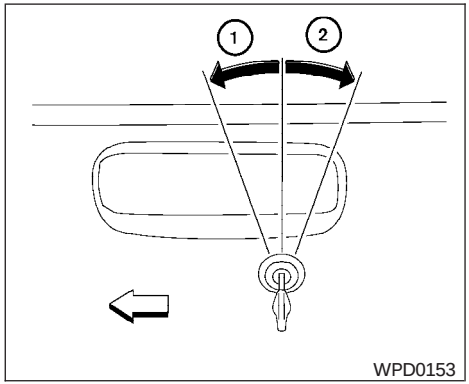

Driver's side

LOCKING WITH KEY

Manual

To lock either the driver or passenger side door, turn the key toward the front of the vehicle ① . To unlock, turn it toward the rear ②.

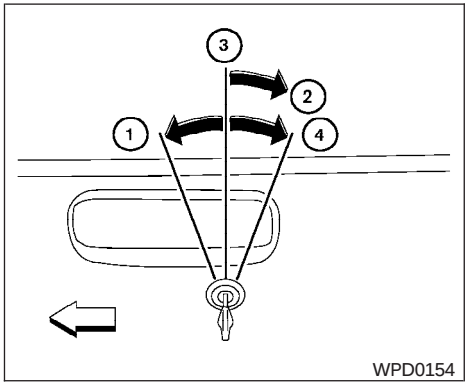

Driver's side

Power (if so equipped)

If your vehicle is equipped with the vehicle security system, the power door lock system allows you to lock or unlock all doors at the same time.

Turning the key toward the front ① of the vehicle locks all doors.

Turning the key one time toward the rear ② of the vehicle unlocks that door. From that position, returning the key to neutral ③ (where the key can only be removed and inserted) and turning it toward the rear again ④ within 5 seconds unlocks all doors.

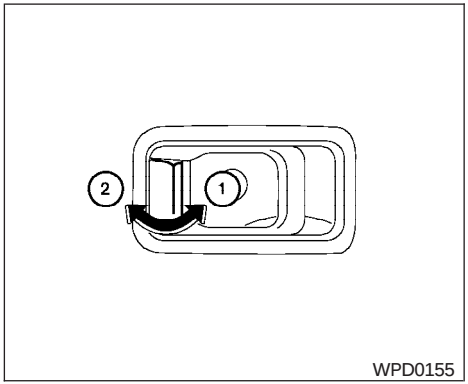

Inside lock

LOCKING WITH INSIDE LOCK KNOB

To lock the door without the key, move the inside lock knob to the lock position ①, then close the door.

To unlock the door without the key, move the inside lock knob to the unlock position ②.

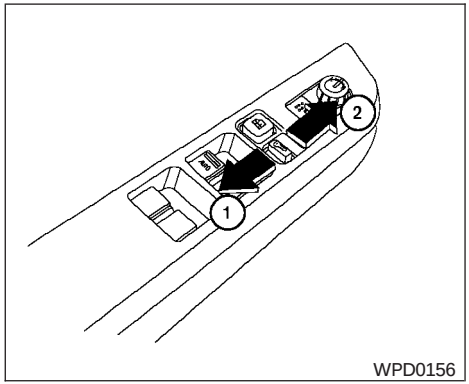

Driver's side

LOCKING WITH POWER DOOR LOCK SWITCH (if so equipped)

To lock all the doors without a key, push the door lock switch (driver's or front passenger's side) to the lock position ①. When locking the door this way, be certain not to leave the key inside the vehicle.

To unlock all the doors without a key, push the door lock switch (driver's or front passenger's side) to the unlock position ②.

Lockout protection

When the power door lock switch (driver's or front passenger's side) is moved to the lock position with the key in the ignition and any door open, all doors will lock and unlock automatically. This helps to prevent the keys from being accidently locked inside the vehicle.

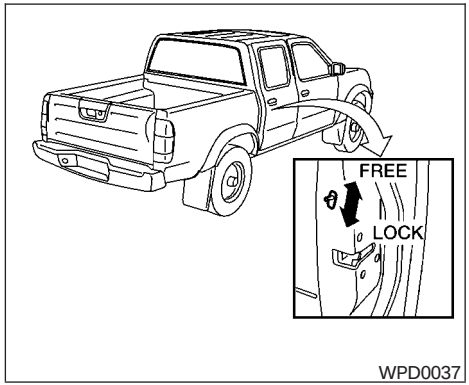

CHILD SAFETY REAR DOOR LOCK (Crew Cab models only)

Child safety locks help prevent the rear doors from being opened accidentally, especially when small children are in the vehicle.

The child safety lock levers are located on the edge of the rear doors.

When the lever is in the lock position, the door can be opened only from the outside.

REMOTE KEYLESS ENTRY SYSTEM (if so equipped)

It is possible to lock/unlock all doors, turn the interior light on, and activate the panic alarm by using the keyfob from outside the vehicle.

Be sure to remove the key from the vehicle before locking the doors.

The keyfob can operate at a distance of approximately 33 ft (10 m) from the vehicle. The effective distance depends on the conditions around the vehicle.

As many as 4 keyfobs can be used with one vehicle. For information concerning the purchase and use of additional keyfobs, contact a NISSAN dealer.

The keyfob will not function when:

- the battery is discharged
- the distance between the vehicle and the keyfob is over 33 ft (10 m)

⚠ CAUTION

Listed below are conditions or occurrences which will damage the keyfob:

- **Do not allow the keyfob to become wet.**
- **Do not drop the keyfob.**
- **Do not strike the keyfob sharply against another object.**

- **Do not place the keyfob for an extended period in an area where temperatures exceed 140°F (60°C).**

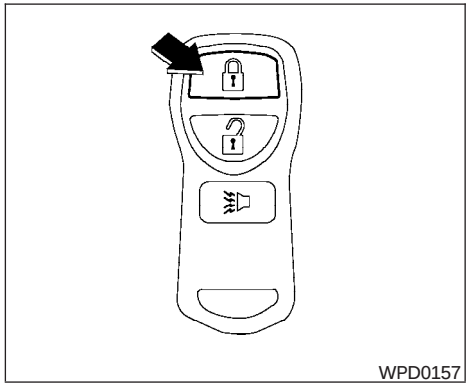

HOW TO USE REMOTE KEYLESS ENTRY SYSTEM

Locking doors

1. Close all windows.
2. Remove the key from the ignition switch.
3. Close the hood and all doors.
4. Push the button on the keyfob. All the doors lock. The hazard lights flash twice and the horn beeps once to indicate all doors are locked.
   - When the button is pushed with all doors locked, the hazard lights flash twice and the horn beeps once as a reminder that the doors are already locked.

The horn may or may not beep once. Refer to “Silencing the horn beep feature” later in this section for details.

- If a door is open and you push the button, the doors will lock but the horn will not beep and the hazard lights will not flash.

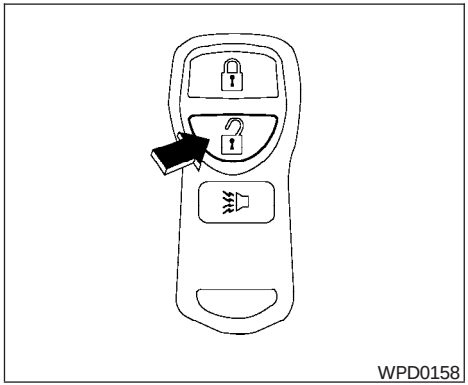

Unlocking doors

Push the button on the keyfob once.

- Only the driver's door unlocks.
- The interior lights illuminate for 30 seconds when the interior light switch is in the normal operation position.

Push the button on the keyfob again with 5 seconds.

- All doors unlock.

The interior lights can be turned off without waiting 30 seconds by inserting the key into the ignition and turning to the ON or START position, locking the doors with the keyfob or pushing the interior light switch to the OFF position.

Auto relock

When the button on the keyfob is pushed, all doors will lock automatically within 5 minutes unless one of the following operations is performed:

- Any door is opened.
- A key is inserted into the ignition switch and the key is turned from OFF to ON.

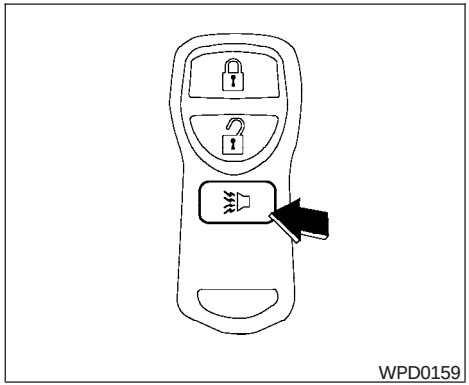

Using the panic alarm

If you are near your vehicle and feel threatened, you may activate the panic alarm to call attention by pushing and holding the button on the keyfob for **longer than 0.5 second.**

The panic alarm and headlights will stay on for about 30 seconds.

The panic alarm stops when:

- it has run for about 30 seconds, or
- the or button is pushed on the keyfob.

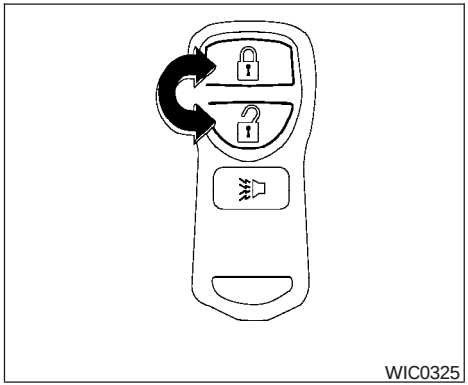

Silencing the horn beep feature

If desired, the horn beep feature can be deactivated using the keyfob.

To deactivate: Press and hold the and buttons **for at least 2 seconds.**

The hazard lights will flash three times to confirm that the horn beep feature has been deactivated.

To activate: Press and hold the and buttons **for at least 2 seconds once more.**

The hazard lights will flash once and the horn will sound once to confirm that the horn beep feature has been reactivated.

Deactivating the horn beep feature does not silence the horn if the alarm is triggered.

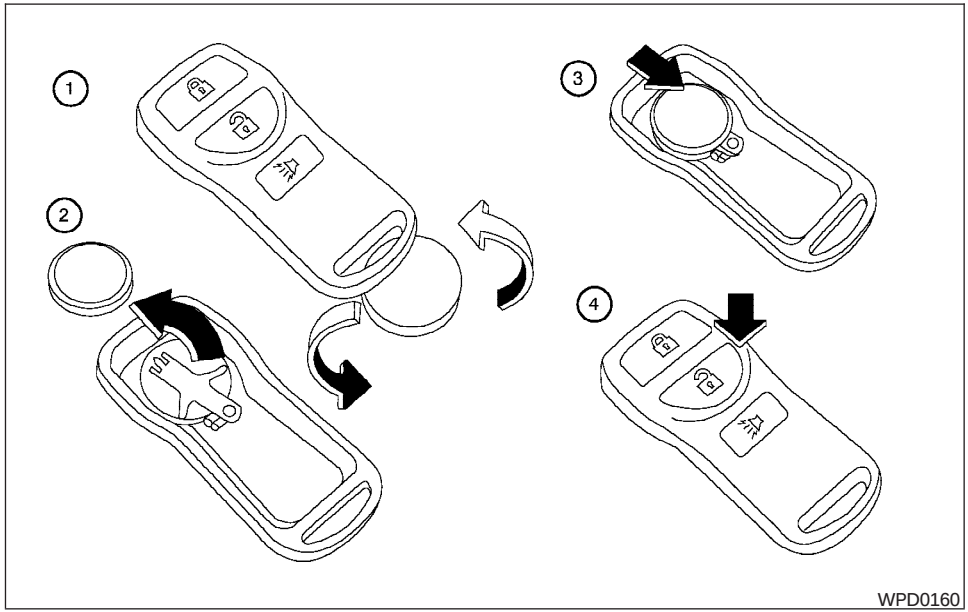

BATTERY REPLACEMENT

Replace the battery in the keyfob as follows:

① Open the lid using a coin.

② Remove the battery.

③ Install a new battery with the "+" facing down.

Recommended battery: Toshiba CR2025 or equivalent.

④ Close the lid securely.

5. Press the button, then the button two or three times to check the keyfob operation.

If the battery is removed for any reason other than replacement, perform step 5.

- **An improperly disposed battery can hurt the environment. Always confirm local regulations for battery disposal.**
- **The keyfob is water-resistant; however, if it does get wet, immediately wipe completely dry.**
- **The operational range of the keyfob extends to approximately 33 ft (10 m) from the vehicle. This range may vary with conditions.**

FCC Notice:
Changes or modifications not expressly approved by the manufacturer for compliance could void the user's authority to operate the equipment.

This device complies with Part 15 of the FCC Rules and RSS-210 of Industry Canada.

Operation is subject to the following two conditions: (1) This device may not cause harmful interference, and (2) this device must accept any interference received, including interference that may cause undesired operation of the device.

HOOD

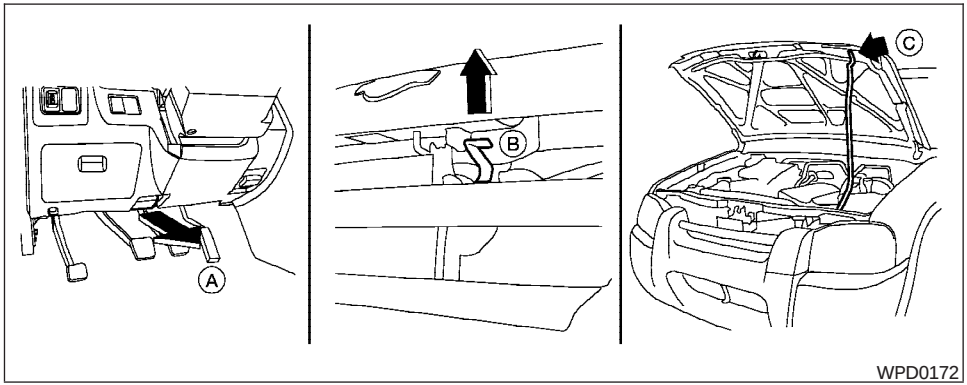

⚠ WARNING

- **Make sure the hood is completely closed and latched before driving. Failure to do so could cause the hood to fly open and result in an accident.**
- **If you see steam or smoke coming from the engine compartment, to avoid injury do not open the hood.**

1. Pull the hood lock release handle Ⓐ located below the driver side instrument panel; the hood springs up slightly.
2. Lift the lever Ⓑ at the front of the hood with your fingertips and raise the hood.
3. Remove the support rod from the clamp.
4. Insert the support rod Ⓒ into the slot in the front edge of the hood.
5. When closing the hood, return the support rod to its original position, lower the hood to approximately 12 inches above the latch and release it. This allows proper engagement of the hood latch.

TUBULAR STEP RAIL (if so equipped)

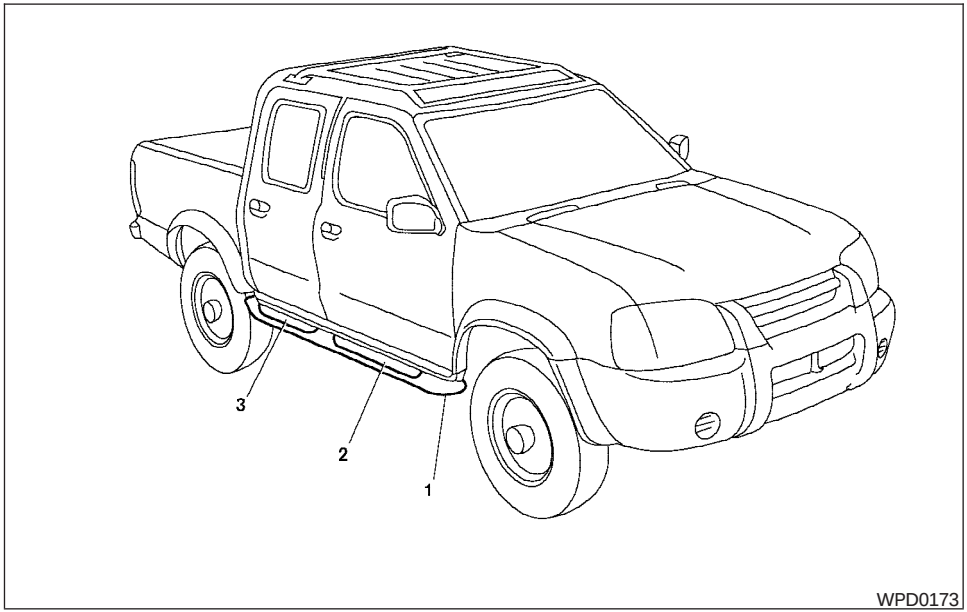

1. Tubular step rail
2. Front passenger step
3. Rear passenger step

The tubular step rail has a front and rear step for assisting passengers getting into and out of the vehicle.

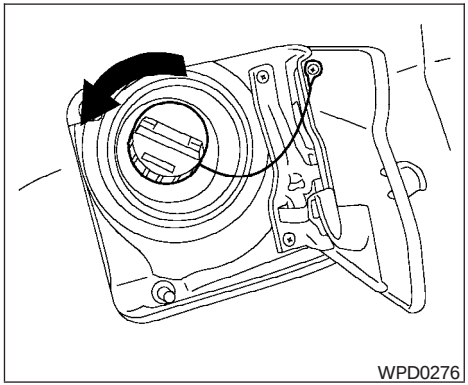
WPD0276

FUEL FILLER CAP

The fuel filler cap is a ratcheting type. Turn the cap counterclockwise to remove. To tighten, turn the cap clockwise until ratcheting clicks are heard.

Put the fuel filler cap in the cap holder while fueling.

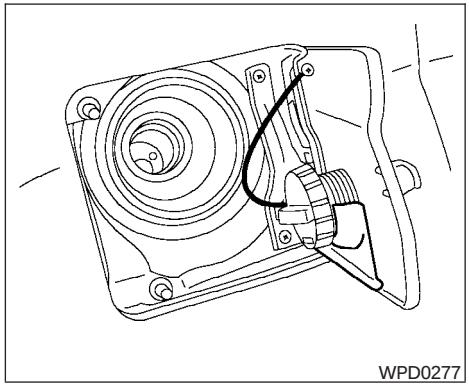
WPD0277

⚠ WARNING

- **Gasoline is extremely flammable and highly explosive under certain conditions. You could be burned or seriously injured if it is misused or mishandled. Always stop the engine and do not smoke or allow open flames or sparks near the vehicle when refueling.**
- **Fuel may be under pressure. Turn the cap a third of a turn, and wait for any "hissing" sound to stop to prevent fuel from spraying out and possibly causing personal injury. Then remove the cap.**
- **Do not attempt to top off the fuel tank after the fuel pump nozzle shuts off automatically. Continued refueling may cause fuel overflow, resulting in fuel spray and possibly a fire.**
- **Use only an original equipment type fuel filler cap as a replacement. It has a built-in safety valve needed for proper operation of the fuel system and emission control system. An incorrect cap can result in a serious malfunction and possible injury. It could also cause the malfunction indicator lamp to come on.**
- **Never pour fuel into the throttle body to attempt to start your vehicle.**
- **Do not fill a portable fuel container on a truck bed liner, rubber truck bed mad, or other insulating material. Static electricity can cause an explosion of flammable liquid, vapor or gas in any vehicle or trailer. To reduce the risk of serious injury or death when filling portable fuel containers:**
  - **Always place the container on the ground when filling.**
  - **Do not use electronic devices when filling.**

- **Keep the pump nozzle in contact with the container while you are filling it.**
- **Use only approved portable fuel containers for flammable liquid.**

⚠ CAUTION

- **If fuel is spilled on the vehicle body, flush it away with water to avoid paint damage.**
- **Tighten until the fuel filler cap clicks. Failure to tighten the fuel filler cap properly may cause the SERVICE ENGINE SOON malfunction indicator lamp (MIL) to illuminate. If the SERVICE ENGINE SOON lamp illuminates because the fuel filler cap is loose or missing, tighten or install the cap and continue to drive the vehicle. The SERVICE ENGINE SOON lamp should turn off after a few driving trips. If the SERVICE ENGINE SOON lamp does not turn off after a few driving trips, have the vehicle inspected by a NISSAN dealer.**
- **For additional information, see the "Malfunction indicator lamp (MIL)" in the "Instruments and Controls" section earlier in this manual.**

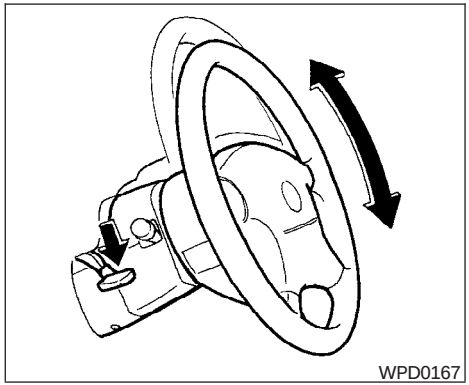

TILT OPERATION (if so equipped)

Pull the lock lever down and adjust the steering wheel up or down to the desired position.

Push the lock lever up firmly to lock the steering wheel in place.

⚠ WARNING

Do not adjust the steering wheel while driving. You could lose control of your vehicle and cause an accident.

SUN VISORS

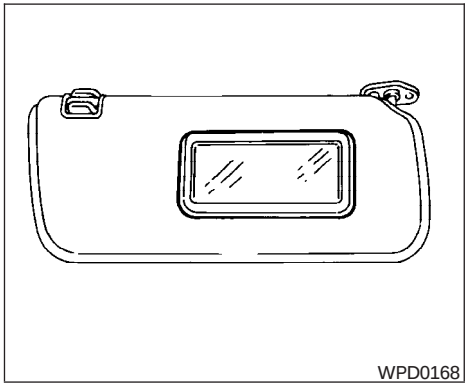

VANITY MIRROR (if so equipped)

A vanity mirror is located on the rear side of the passenger sun visor.

MIRRORS

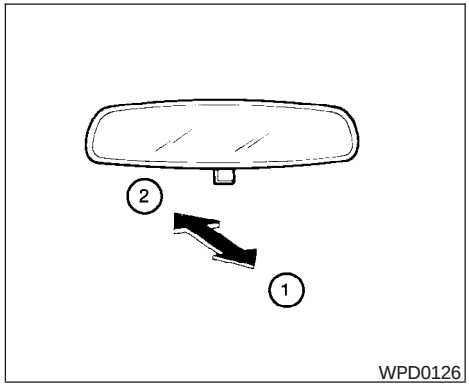

INSIDE MIRROR

The night position ① reduces glare from the headlights of vehicles behind you at night.

Use the day position ② when driving in daylight hours.

⚠ WARNING

Use the night position only when necessary, because it reduces rear view clarity.

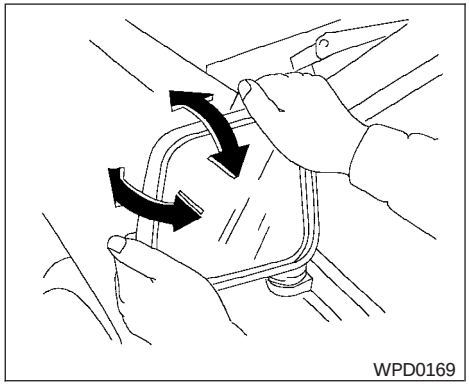

Type A

OUTSIDE MIRRORS

The outside mirrors can be moved in any direction for a better rear view.

Type A: Adjust to the desired position by moving the entire mirror assembly.

Type B: Adjust to the desired position by pressing directly on the mirror surface.

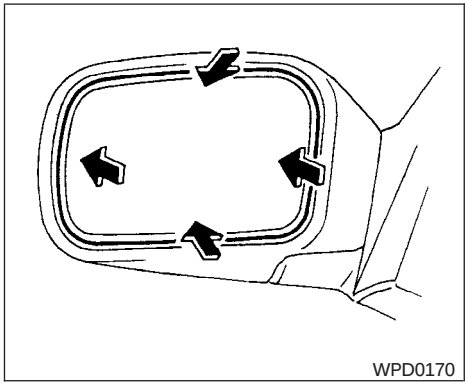

Type B

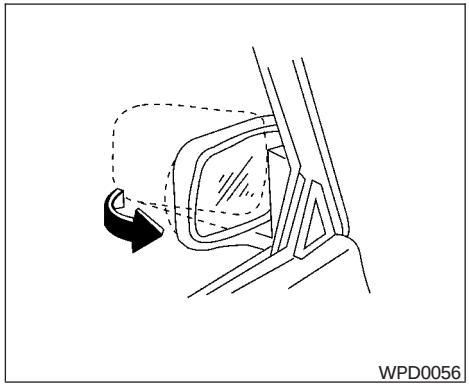

Foldable outside mirrors

Push the mirrors backward to fold them.

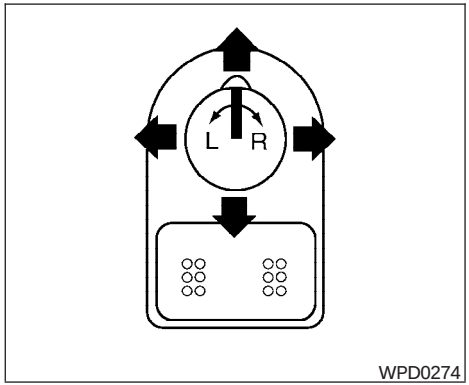

OUTSIDE MIRROR REMOTE CONTROL (if so equipped)

The outside mirror remote control only operates when the ignition switch is in the ACC or ON position.

Rotate the control lever to select the right or left mirror. Adjust the mirror to the desired position by moving the control lever.

⚠ WARNING

- **Objects viewed in the outside mirror on the passenger side are closer than they appear. Be careful when moving to the right. Using only this mirror could cause an accident. Use the inside mirror or glance over your shoulder to properly judge distances to other objects.**
- **Do not adjust the mirrors while driving. You could lose control of your vehicle and cause an accident.**

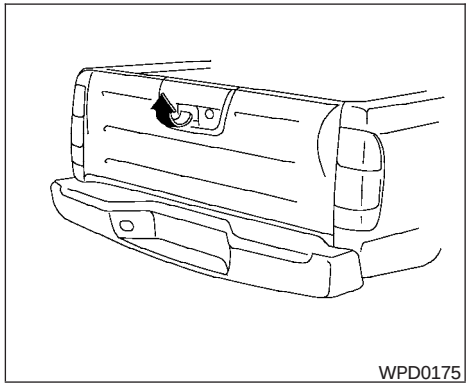
WPD0175

TAILGATE

Opening the tailgate

Pull the tailgate handle upward and lower the tailgate. The support cables hold the tailgate open.

When closing the tailgate, make sure the latches are securely locked.

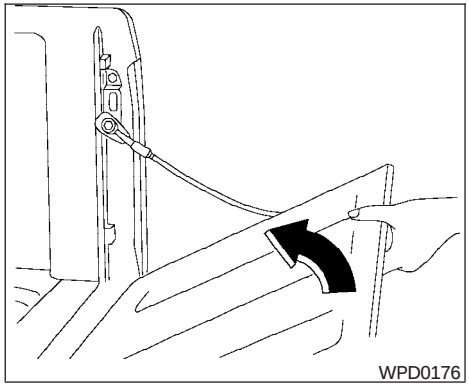
WPD0176

To open the tailgate to the lowest position, lift the tailgate to a 45 degree angle, then release the support cables.

Do not drive the vehicle with the tailgate down, unless equipped with Nissan's Bed Extender (accessory) in the deployed position.

For proper truck box loading see "Loading tips" under the "Vehicle loading information" heading in the "Technical and consumer information" section of this manual.

⚠ WARNING

- **It is extremely dangerous to ride in a cargo area inside a vehicle. In a collision, people riding in these areas are more likely to be seriously injured or killed.**
- **Do not allow people to ride in any area of your vehicle that is not equipped with seats and seat belts.**
- **Be sure everyone in your vehicle is in a seat and using a seat belt properly.**

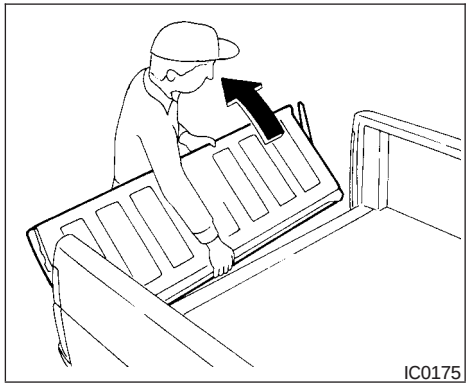

Removing the tailgate

1. Release the tailgate support cables.
2. Hold the tailgate at a 45 degree angle.
3. Pull the tailgate out from the left side hinge.
4. Remove the tailgate from the right side hinge.

⚠ CAUTION

The tailgate is heavy. Be careful not to drop it during removal.

Installing the tailgate

1. Insert the tailgate into the right side hinge.
2. Hold the tailgate at a 45 degree angle and insert into the left side hinge.
3. Continue to hold the tailgate at a 45 degree angle and attach the tailgate support cables.
4. Close the tailgate securely.

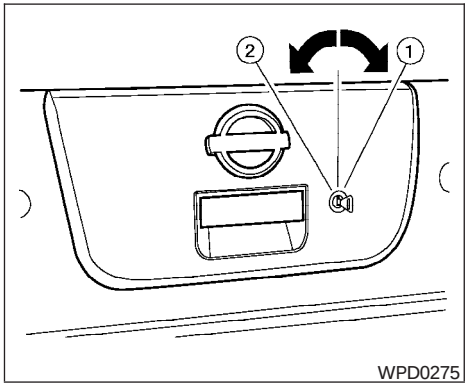

Locking the tailgate

To lock the tailgate, turn the key toward the passenger side of the vehicle ①. To unlock, turn the key toward the driver side ②.

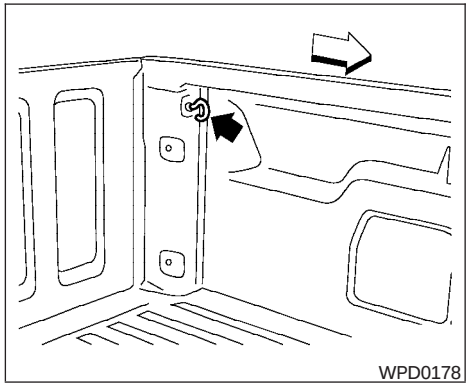

TIE DOWN HOOKS

For your convenience, tie down hooks are placed at each corner of the truck box. These may be used to help secure cargo loaded into the truck box.

- The weight of the cargo load must be evenly distributed over both the front and the rear axles.
- All cargo should be securely fastened with ropes or straps to prevent it from shifting or sliding within the vehicle.

⚠ WARNING

- **Properly secure all cargo with ropes or straps to help prevent it from sliding or shifting. In a sudden stop or collision, unsecured cargo could cause personal injury.**

MEMO

4 Heater, air conditioner and audio systems

Ventilators 4-2
Heater and air conditioner (manual) 4-2
Controls 4-3
Heater operation 4-4
Air conditioner operation (if so equipped) 4-5
Airflow charts 4-6
Servicing air conditioner 4-9
Audio system 4-10
Radio 4-10
FM radio reception 4-10
AM radio reception 4-10
Audio operation precautions 4-11
FM-AM radio with compact disc (CD) player (if so equipped) 4-12
FM-AM radio with compact disc (CD) changer (if so equipped) 4-16
CD care and cleaning 4-27
Steering wheel switch for audio control (if so equipped) 4-28
Antenna 4-28
Car phone or CB radio 4-29

VENTILATORS

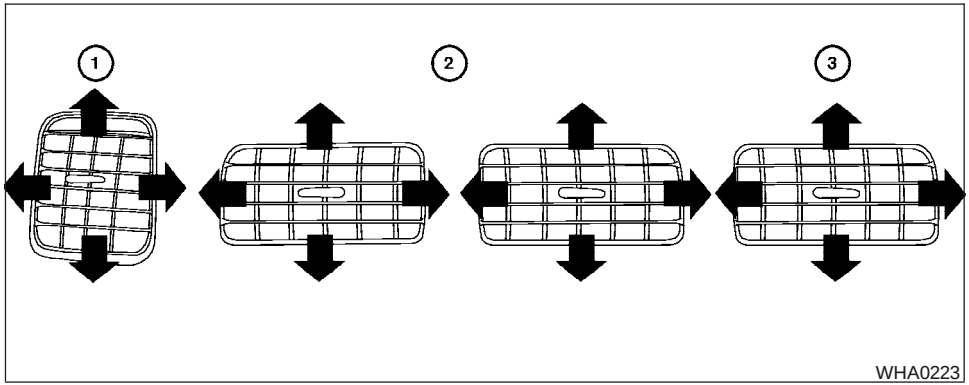

Adjust air flow direction for the driver side ①, center ②, and passenger side ③ ventilators by moving the ventilator slide and/or ventilator assemblies.

HEATER AND AIR CONDITIONER (manual)

⚠ WARNING

- **The air conditioner cooling function operates only when the engine is running.**
- **On hot, sunny days, temperatures in a closed vehicle could quickly become high enough to cause severe or possibly fatal injuries to people or animals. Do not leave children or adults who would normally require the support of others in your vehicle. Unattended pets should not be left alone either.**
- **Do not use the recirculation mode for long periods as it may cause the interior air to become stale and the windows to fog up.**
- **Positioning of the heater and/or air conditioner controls should not be done while driving so full attention may be given to vehicle operation.**

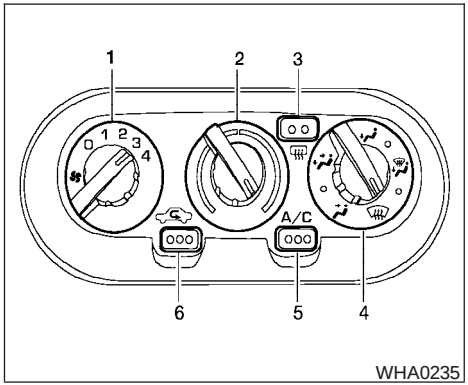

1. Fan control dial
2. Temperature control dial
3. Rear window defroster switch (if so equipped)
4. Air flow control dial
5. Air conditioner button (if so equipped)
6. Air recirculation button (if so equipped)

CONTROLS

Fan control dial

The fan control dial turns the fan on and off, and controls fan speed.

Air flow control dial

The air flow control dial allows you to select the air flow outlets.

— Air flows from center and side ventilators.

— Air flows from center and side ventilators and the front and rear floor outlets.

— Air flows mainly from the front and rear floor outlets.

— Air flows from defroster outlets and the front and rear floor outlets.

— Air flows mainly from defroster outlets.

The air flow control dial also has intermediate positions which allow the air flow to be distributed between 2 of the icon positions on the air flow control dial.

Temperature control dial

The temperature control dial allows you to adjust the temperature of the outlet air. To make the temperature more cool turn the dial more to the left to make the temperature more warm turn the dial more to the right.

Air recirculation button (if so equipped)

NOTE:

The air recirculation feature is available only on those vehicles equipped with air conditioning.

ON position (Indicator light on):
Interior air is recirculated inside the vehicle.

Push the button to the on position when:

- driving on a dusty road.
- to prevent traffic fumes from entering the passenger compartment.
- for maximum cooling when using the air conditioner.

OFF position (Indicator light off):
Outside air is drawn into the passenger compartment and distributed through the selected outlet.

Use the off position for normal heater or air conditioner operation.

A/C Air conditioner button (if so equipped)

The button is provided only on vehicles equipped with an air conditioner.

Start the engine, turn the fan control dial to the desired (1 - 4) position and push the A/C button to turn on the air conditioner. The indicator light comes on when the air conditioner is operating. To turn off the air conditioner, push the A/C button again.

The air conditioner cooling function operates only when the engine is running.

Rear window defroster switch (if so equipped)

For more information about the rear window defroster switch, see “Rear window defroster switch” in the “Instruments and controls” section of this manual.

HEATER OPERATION

Heating

This mode is used to direct heated air to the foot outlets. Some air also flows from the defrost outlets.

1. Push the button (if so equipped) to the off position for normal heating.
2. Turn the air flow control dial to the position.
3. Turn the fan control dial to the desired position.
4. Turn the temperature control dial to the desired position between the middle and the hot position.

Ventilation

This mode directs outside air to the side and center ventilators.

1. Push the button (if so equipped) to the off position.
2. Turn the air flow control dial to the position.
3. Turn the fan control dial to the desired position.
4. Turn the temperature control dial to the desired position.

Defrosting or defogging

This mode directs the air to the defrost outlets to defrost/defog the windows.

1. Turn the air flow control dial to the position.
2. Turn the fan control dial to the desired position.
3. Turn the temperature control dial to the desired position between the middle and the hot position.

- To quickly remove ice or fog from the windows, turn the fan control dial to 4 and the temperature control lever to the full HOT position.
- When the position is selected, the air conditioner automatically turns on (however, the indicator light will not illuminate) if the outside temperature is more than 36°F (2°C). The air conditioning system will continue to operate until the fan control dial is turned to OFF or the vehicle is shut off, even if the air flow control dial is turned to a position other than the position. This dehumidifies the air which helps defog the windshield. The mode automatically turns off, allowing outside air to be drawn into the passenger compartment to further improve the defogging performance.

Bi-level heating

This mode directs cooler air from the side and center vents and warmer air from the floor outlets. When the temperature control dial is moved to the full hot or full cool position, the air between the vents and the floor outlets is the same temperature.

1. Push the button (if so equipped) to the off position.

2. Turn the air flow control dial to the position.
3. Turn the fan control dial to the desired position.
4. Turn the temperature control dial to the desired position.

Heating and defogging

This mode heats the interior and defogs the windshield.

1. Turn the air flow control dial to the position.
2. Turn the fan control dial to the desired position.
3. Turn the temperature control dial to the desired position between the middle and the hot position.

- When the position is selected, the air conditioner automatically turns on (however, the indicator light will not illuminate) if the outside temperature is more than 36°F (2°C). The air conditioning system will continue to operate until the fan control dial is turned to OFF or the vehicle is shut off, even if the air flow control dial is turned to a position other than the position. This dehumidifies the air which helps defog the windshield. The mode (if so equipped) automatically turns off, allowing outside air to be drawn into the passenger compartment to further improve the defogging performance.

Operating tips

Clear snow and ice from the wiper blades and air inlet in front of the windshield. This improves heater operation.

AIR CONDITIONER OPERATION (if so equipped)

Start the engine, turn the fan control dial to the desired (1 - 4) position, and push in the A/C button to activate the air conditioner. When the air conditioner is on, cooling and dehumidifying functions are added to the heater operation.

The air conditioner cooling function operates only when the engine is running.

Cooling

This mode is used to cool and dehumidify the air.

1. Push the button to the off position.
2. Turn the air flow control dial to the position.
3. Turn the fan control dial to the desired position.
4. Push the A/C button. The indicator light comes on.
5. Turn the temperature control dial to the desired position.

- For quick cooling when the outside temperature is high, push the button to the on position (indicator light on). Be sure to return the button to the off position for normal cooling.

Dehumidified heating

This mode is used to heat and dehumidify the air.

1. Push the button to the off position.
2. Turn the air flow control dial to the position.
3. Turn the fan control dial to the desired position.
4. Push the A/C button. The indicator light comes on.
5. Turn the temperature control dial to the desired position.

Dehumidified defogging

This mode is used to defog the windows and dehumidify the air.

1. Turn the air flow control dial to the position.
2. Turn the fan control dial to the desired position.
3. Push the A/C button. The indicator light comes on.

When the , or positions in between are selected, the air conditioner automatically turns on (however, the indicator light will not illuminate) if the outside temperature is more than 36°F (2°C). The air conditioning system will continue to operate until the fan control dial is turned to OFF or the vehicle is shut off, even if the air flow control dial is turned to a position other than the position. This dehumidifies the air which helps defog the windshield. The mode automatically turns off, allowing outside air to be drawn into the passenger compartment to further improve the defogging performance.

4. Turn the temperature control dial to the desired position.

Operating tips

- Keep the windows closed while the air conditioner is in operation.
- After parking in the sun, drive for 2 or 3 minutes with the windows open to vent hot air from the passenger compartment. Then, close the windows. This allows the air conditioner to cool the interior more quickly.
- **The air conditioning system should be operated for approximately 10 minutes at least once a month. This helps prevent damage to the system due to lack of lubrication.**
- **If the engine coolant temperature gauge indicates engine coolant temperature over the normal range, turn the air conditioner off. See "If your vehicle overheats" in the "In case of emergency" section of this manual.**

AIRFLOW CHARTS

The following charts show the button and dial positions for **MAXIMUM AND QUICK** heating, cooling or defrosting. **The air recirculation button should always be in the OFF position for heating and defrosting.**

DEFROSTING/ DEFOGGING

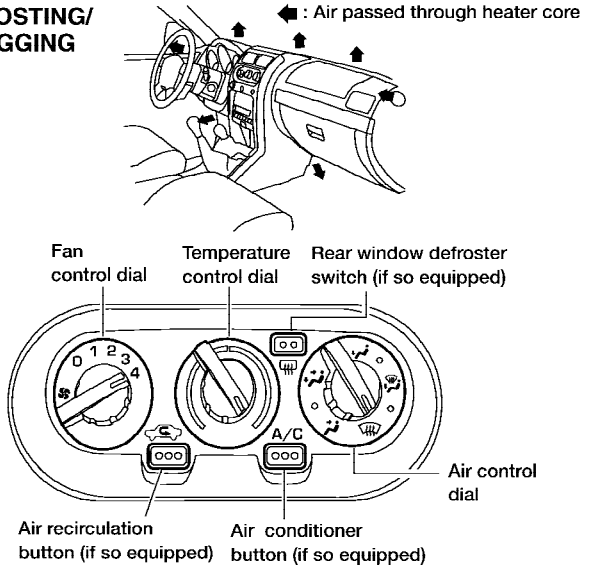

A/C button (if so equipped)	Air recirculation button (if so equipped)	Air control dial	Temp control dial	Fan control dial
OFF (automatically turns on)	OFF (automatically turns off)		HOT (RIGHT)	4

LHA0420

BI-LEVEL HEATING

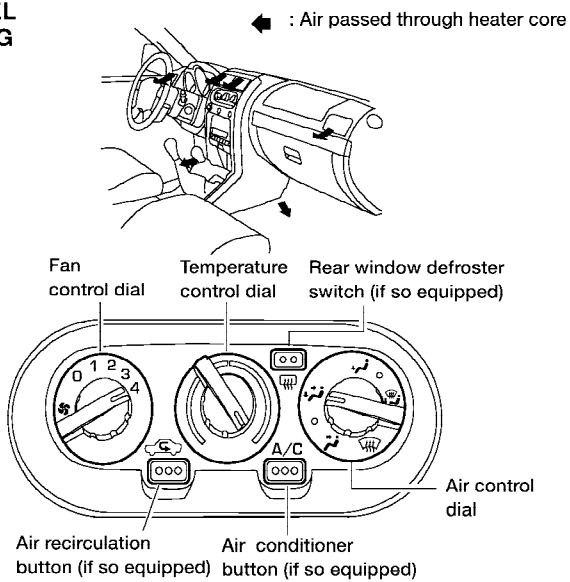

A/C button (if so equipped)	Air recirculation button (if so equipped)	Air control dial	Temp control dial	Fan control dial
OFF	OFF		HOT (RIGHT)	4

LHA0421

HEATING

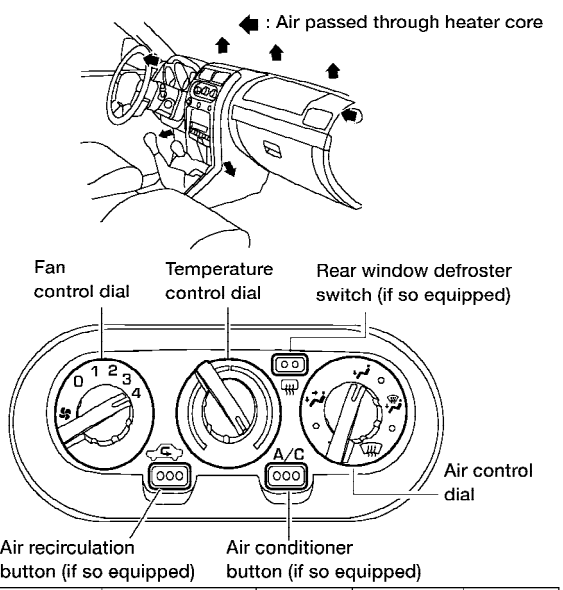

A/C button (if so equipped)	Air recirculation button (if so equipped)	Air control dial	Temp control dial	Fan control dial
OFF	OFF		HOT (RIGHT)	4

LHA0422

HEATING & DEFROSTING/ DEFOGGING

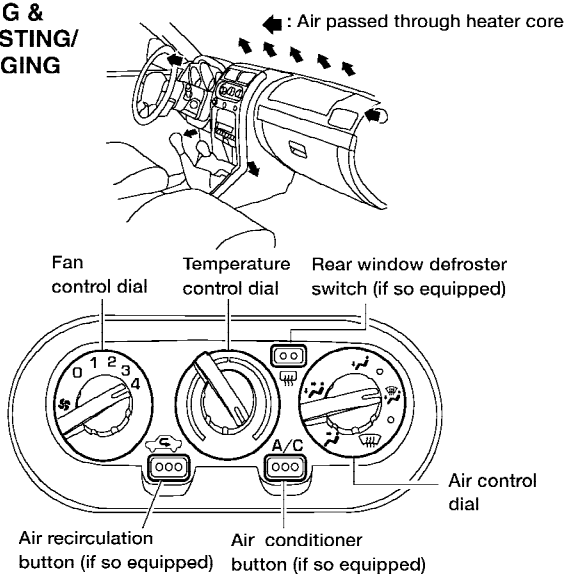

A/C button (if so equipped)	Air recirculation button (if so equipped)	Air control dial	Temp control dial	Fan control dial
OFF (automatically turns on)	OFF (automatically turns off)		HOT (RIGHT)	4

LHA0423

COOLING

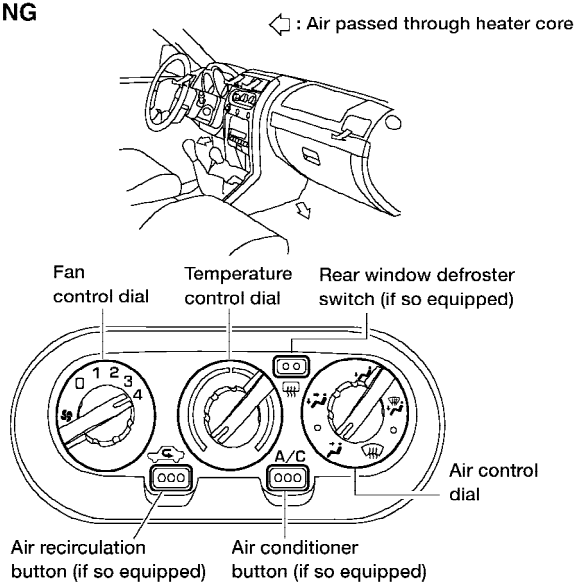

A/C button (if so equipped)	Air recirculation button (if so equipped)	Air control dial	Temp control dial	Fan control dial
ON	ON (Max) OFF (Normal)		COLD (LEFT)	4

LHA0424

SERVICING AIR CONDITIONER

The air conditioner system in your NISSAN vehicle is charged with a refrigerant designed with the environment in mind.

This refrigerant does not harm the earth's ozone layer.

Special charging equipment and lubricant is required when servicing your NISSAN air conditioner. Using improper refrigerants or lubricants will cause severe damage to your air conditioner system. See "Air conditioner system refrigerant and lubricant recommendations" in the "Technical and consumer information" section of this manual.

A NISSAN dealer is able to service your "environmentally friendly" air conditioning system.

⚠ WARNING

The air conditioner system contains refrigerant under high pressure. To avoid personal injury, any air conditioner service should be done only by an experienced technician with proper equipment.

RADIO

Turn the ignition key to the ACC or ON position and press the PWR (power)/VOL (volume) knob to turn the radio on. If you listen to the radio with the engine not running, the key should be turned to the ACC position.

Radio reception is affected by station signal strength, distance from radio transmitter, buildings, bridges, mountains and other external influences. Intermittent changes in reception quality normally are caused by these external influences.

Using a cellular phone in or near the vehicle may influence radio reception quality.

Radio reception

Your NISSAN radio system is equipped with state-of-the-art electronic circuits to enhance radio reception. These circuits are designed to extend reception range, and to enhance the quality of that reception.

However there are some general characteristics of both FM and AM radio signals that can affect radio reception quality in a moving vehicle, even when the finest equipment is used. These characteristics are completely normal in a given reception area, and do not indicate any malfunction in your NISSAN radio system.

Reception conditions will constantly change because of vehicle movement. Buildings, terrain, signal distance and interference from other vehicles can work against ideal reception. Described below are some of the factors that can affect your radio reception.

FM RADIO RECEPTION

Range: FM range is normally limited to 25 - 30 miles (40 - 48 km), with monaural (single channel) FM having slightly more range than stereo FM. External influences may sometimes interfere with FM station reception even if the FM station is within 25 miles (40 km). The strength of the FM signal is directly related to the distance between the transmitter and receiver. FM signals follow a line-of-sight path, exhibiting many of the same characteristics as light. For example they will reflect off objects.

Fade and drift: As your vehicle moves away from a station transmitter, the signals will tend to fade and/or drift.

Static and flutter: During signal interference from buildings, large hills or due to antenna position (usually in conjunction with increased distance from the station transmitter) static or flutter can be heard. This can be reduced by adjusting the treble control to reduce treble response.

Multipath reception: Because of the reflective characteristics of FM signals, direct and reflected signals reach the receiver at the same time. The signals may cancel each other, resulting in momentary flutter or loss of sound.

AM RADIO RECEPTION

AM signals, because of their low frequency, can bend around objects and skip along the ground. In addition, the signals can be bounced off the ionosphere and bent back to earth. Because of these characteristics, AM signals are also subject to interference as they travel from transmitter to receiver.

Fading: Occurs while the vehicle is passing through freeway underpasses or in areas with many tall buildings. It can also occur for several seconds during ionospheric turbulence even in areas where no obstacles exist.

Static: Caused by thunderstorms, electrical power lines, electric signs and even traffic lights.

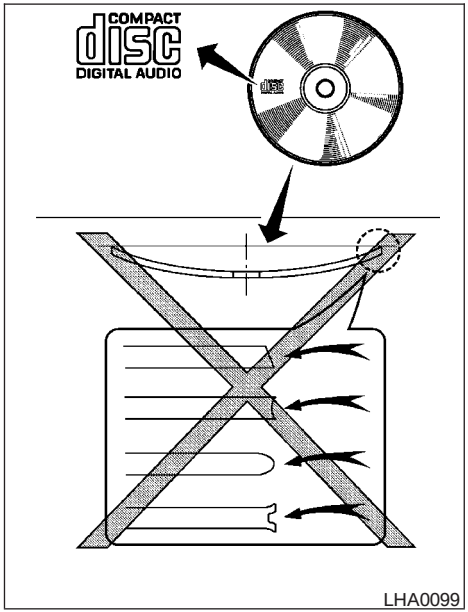

AUDIO OPERATION PRECAUTIONS

Compact disc (CD) player

- **Only use high quality 4.7 inches (12 cm) round discs that have the "COMPACT disc DIGITAL AUDIO" logo on the disc or packaging.**
- **During cold weather or rainy days, the player may malfunction due to the humidity. If this occurs, remove the CD and dehumidify or ventilate the player completely.**
- **The player may skip while driving on rough roads.**
- **The CD player sometimes cannot function when the compartment temperature is extremely high. Decrease the temperature before use.**
- **Do not expose the CD to direct sunlight.**
- **CDs that are in poor condition or are dirty, scratched or covered with fingerprints may not work properly.**
- **The following CDs may not work properly:**
  - **Copy control compact discs (CCCD)**
  - **Recordable compact discs (CD-R)**
  - **Rewritable compact discs (CD-RW)**
- **Do not use the following CDs as they may cause the CD player to malfunction:**
  - **3.1 in (8 cm) discs with an adapter**
  - **CDs that are not round**
  - **CDs with a paper label**
  - **CDs that are warped, scratched, or have abnormal edges**

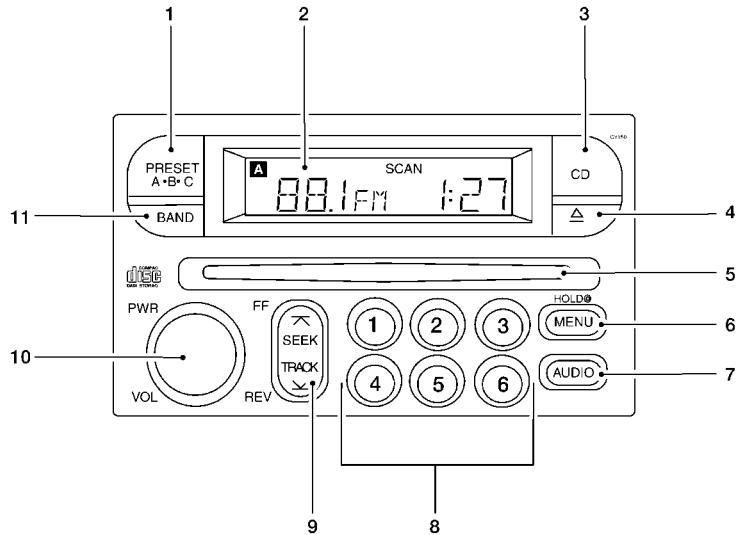

LHA0117

1. PRESET ABC button
2. Display
3. CD button
4. CD eject button
5. CD insert slot
6. MENU button
7. AUDIO button
8. Station select buttons
9. SEEK/TRACK button
10. PWR/VOL control knob
11. BAND select button

FM-AM RADIO WITH COMPACT DISC (CD) PLAYER (if so equipped)

PWR/VOL control knob

Turn the ignition key to the ACC or ON position, then push the PWR/VOL control knob. If you listen to the radio with the engine not running, turn the key to the ACC position. The mode (radio or CD) that was playing immediately before the system was turned off resumes playing.

When no CD is loaded, the radio comes on. Pushing the PWR/VOL control knob again turns the system off.

Turn the PWR/VOL control knob to the right to increase volume or to the left to decrease volume.

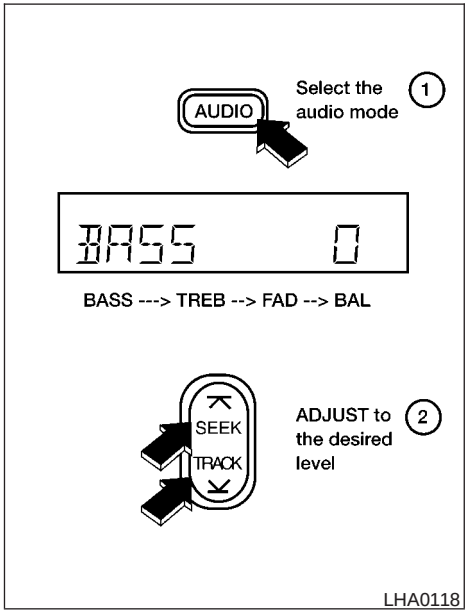

Adjusting tone quality and speaker balance

To adjust the audio levels for bass, treble, fader, and balance, push the AUDIO button and adjust the level with the SEEK/TRACK button. Press the AUDIO button once for BASS (bass), twice for TREB (treble), 3 times for FAD (fader) and 4 times for BAL (balance). Once the audio level is set the display will return back to radio or CD display mode after 7 seconds or the AUDIO button can be pressed again within 7 seconds to set the next audio level. Pressing the AUDIO button a fifth time will return the display back to radio or CD display mode.

Fader adjusts the sound level between the front and rear speakers, balance adjusts the sound level between the right and left speakers.

Clock set

1. Press and hold the MENU button until it beeps (longer than 2 seconds).
2. The hours will start flashing. Press SEEK/TRACK (⌅ or ⌄) to adjust the hours.
3. Press the MENU button until the radio beeps to switch to the minute adjustment.
4. The minutes will start flashing. Press SEEK/TRACK (⌅ or ⌄) to adjust the minutes.
5. Press the MENU button again to exit the clock set mode.

The display will return to the regular clock display after 7 seconds, or you may press the MENU button again to return to the regular clock display.

FM-AM radio operation

BAND **FM-AM band select**

Push the BAND button to change from AM to FM reception.

The FM stereo indicator, ST, illuminates during FM stereo reception. When the stereo broadcast signal is weak, the radio automatically changes from stereo to monaural reception.

⌅ ⌄ SEEK/manual/SCAN tuning

When the MENU button is pushed while the radio is playing, tuning mode is cycled between:

SEEK tuning → manual tuning → SCAN mode

“TUNE” and “SCAN” are shown in the display for each mode. No icon is displayed for SEEK mode.

⚠ WARNING

The radio should not be tuned while driving so full attention may be given to vehicle operation.

SEEK tuning

Push the SEEK/TRACK tuning button (⌅ or ⌄) for less than 1.5 seconds. SEEK tuning begins from low to high frequencies or high to low frequencies, depending on which button is

pressed, and stops at the next broadcasting station. If using the button, once the highest broadcasting station is reached, the radio continues in the SEEK mode at the lowest broadcasting station. If using the button, once the lowest broadcasting station is reached, the radio continues in the SEEK mode at the highest broadcasting station.

Manual tuning

Use the and buttons for manual tuning. To move quickly through the channels, hold either of the tuning buttons down.

SCAN tuning

Push and hold the SEEK/TRACK tuning button (or) for more than 1.5 seconds.

SCAN illuminates in the display window, and the radio station blinks. SCAN tuning begins from low to high frequencies or high to low frequencies, depending on which button is pressed. SCAN tuning stops at each broadcasting station for 5 seconds. When scanning, SCAN is solid and the radio station blinks. When temporarily stopped on a station, SCAN blinks and the station display is solid. Pushing the button again during this 5 second period stops SCAN tuning and the radio remains tuned to that station.

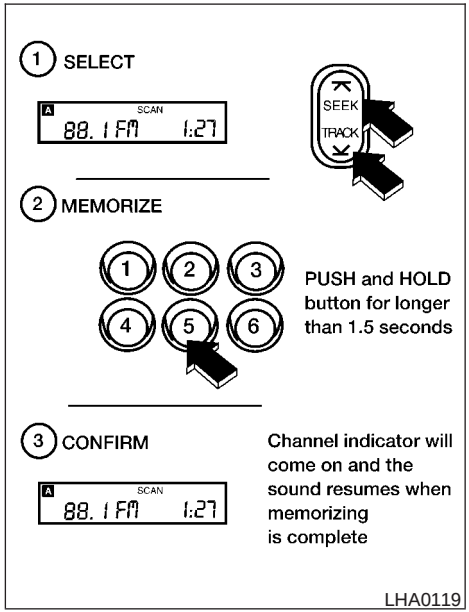

Station memory operations

Each preset mode (A, B or C) has 6 presets, capable of storing any combination of AM and FM stations.

Press the PRESET ABC button to change between the presets:

A→B→C

The radio displays icon A, B or C to indicate which set of presets is active.

To store a radio station in a preset:

1. Select the desired preset by pressing PRESET ABC.
2. Tune to the desired station.
3. Press the desired station select button for more than 3 seconds. For example, in the illustrations, ch2 is to be memorized. The radio mutes when the select button is pushed.
4. When the indicator illuminates in the display and the sound resumes, memorizing is complete.
5. Other station select buttons can be set in the same manner.

If the battery cable is disconnected, or if the radio fuse opens, the radio memory is canceled. In that case, reset the desired stations.

Compact disc (CD) player operation

Turn the ignition key to the ACC or ON position, and carefully insert the compact disc into the slot

with the label side up. The compact disc is automatically pulled into the slot and starts to play.

If the radio is already operating, it automatically turns off and the compact disc begins to play.

⚠ CAUTION

Do not force a compact disc into the CD insert slot. This could damage the CD and/or CD changer/player.

CD button

When the CD button is pushed with a compact disc loaded and the radio playing, the radio turns off and the compact disc starts to play.

Track up/down, FF/REV (rewind) buttons

Track up/down

When the button is pushed and released while the compact disc is playing, the selection following the present one starts to play from the beginning. Push the button several times to skip several selections. Each time the button is pushed, the CD advances 1 additional selection. The number appears in the display window. (When the last selection on the compact disc is skipped, the first selection is played.)

When the button is pushed and released, the selection being played returns to the beginning. Push the button several times to skip back several selections. Each time the button is pushed, the CD moves back 1 selection.

If the play pattern is in MIX mode when the or button is pushed the next selection will be chosen at random.

FF (Fast Forward)/REV (Reverse)

When the or button is pushed and held while the compact disc is playing, the compact disc plays at an increased speed while fast forwarding or rewinding. When the button is released, the compact disc returns to normal play speed.

MENU

When the MENU button is pushed while the compact disc is playing, the play pattern changes as follows:

RPT: The current selection is repeated.

MIX: Selections are played at random, not following the sequence on the compact disc. The same program may be repeated twice. If the button is pushed in the MIX mode, selections will be chosen at random.

Blank (no symbol): All selections are played repeatedly in sequence.

When a new compact disc is inserted, the play pattern automatically changes to ALL.

CD EJECT button

When the button is pushed with a compact disc loaded, the compact disc ejects.

When the button is pushed while the compact disc is playing, the compact disc ejects and the system turns off.

DISC indicator light

This light comes on when a compact disc is loaded into the player.

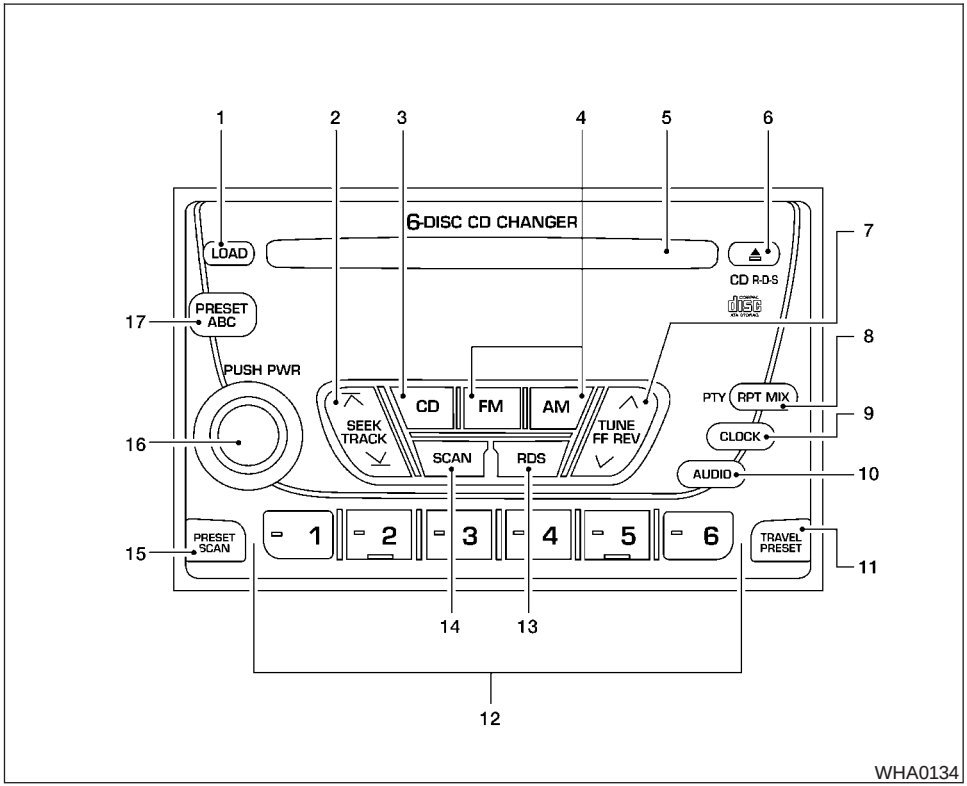

1. Disc loading button
2. SEEK/TRACK button
3. CD select button
4. Band select buttons
5. CD insert slot
6. CD eject button
7. Radio manual tuning buttons
8. RPT MIX/PTY button
9. CLOCK button
10. AUDIO button
11. TRAVEL PRESET button
12. Station select buttons
13. RDS button
14. SCAN button
15. PRESET SCAN button
16. PWR/VOL control knob
17. PRESET ABC button

FM-AM RADIO WITH COMPACT DISC (CD) CHANGER (if so equipped)

PWR/VOL control knob

Turn the ignition key to the ACC or ON position, then push the PWR/VOL control knob. If you listen to the radio with the engine not running, turn the key to the ACC position. The mode (radio or CD) that was playing immediately before the system was turned off resumes playing.

When no CD is loaded, the radio comes on. Pushing the PWR/VOL control knob again turns the system off.

Turn the PWR/VOL control knob to the right to increase volume or to the left to decrease volume.

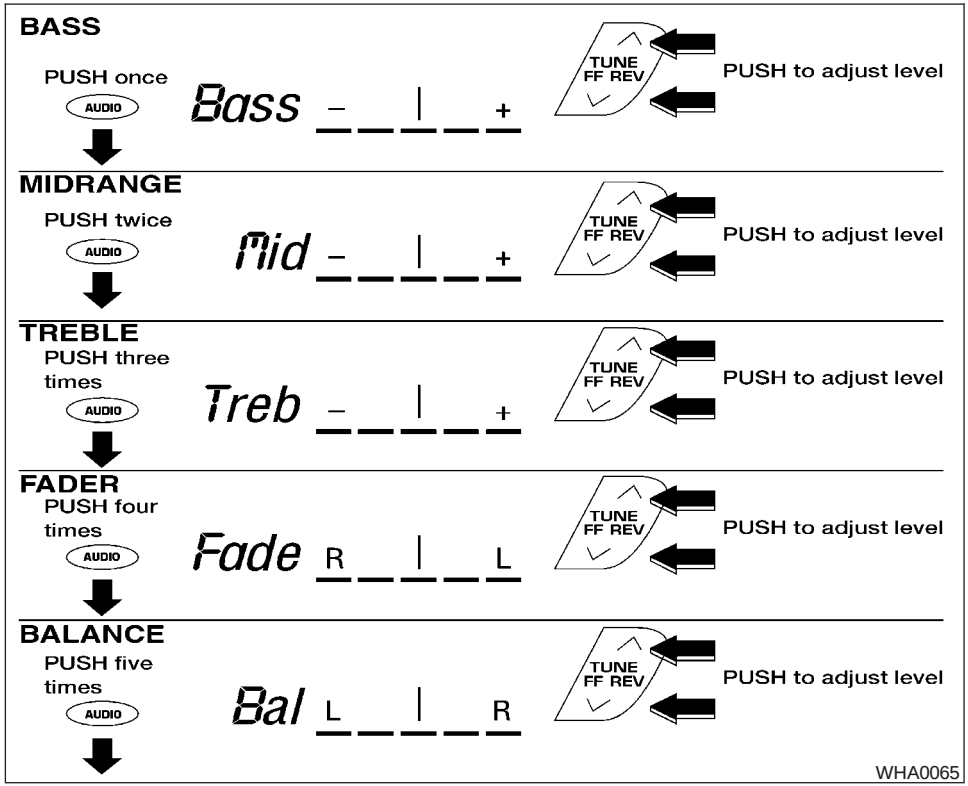

Adjusting tone quality and speaker balance

Press the AUDIO button to enter the audio adjust mode:

Bass→Mid→Treb→Fade→Bal

Press the TUNE/FF-REV (⌃ or ⌄) or SEEK/TRACK (⊼ or ⊻) to adjust to the desired levels. The display will return to the regular radio display after 7 seconds, or you may press the AUDIO button again to return to the regular radio display.

Clock operation

Pressing the CLOCK button displays the clock with the radio on or off. Press the CLOCK button again to turn off the clock display.

Clock set

1. Press and hold the CLOCK button until it beeps (>1.5 seconds).
2. The hours will start flashing. Press TUNE/FF-REV (⌃ or ⌄) or SEEK/TRACK (⊼ or ⊻) to adjust the hours.
3. Press the CLOCK button to switch to the minute adjustment.
4. Press TUNE/FF-REV (⌃ or ⌄) or SEEK/TRACK (⊼ or ⊻) to adjust the minutes.
5. Press the CLOCK button again to exit the clock set mode.

The display will return to the regular clock display after 7 seconds, or you may press the CLOCK button again to return to the regular clock display.

FM-AM radio operation

FM-AM band select

Push the AM or the FM button to change from AM to FM reception.

The FM stereo indicator, ST, illuminates during FM stereo reception. When the stereo broadcast signal is weak, the radio automatically changes from stereo to monaural reception.

⌃ ⌄ TUNE/FF—REV

⚠ WARNING

The radio should not be tuned while driving so full attention may be given to vehicle operation.

Use the ⌄ and ⌃ buttons for manual tuning. To move quickly through the channels, hold the tuning buttons down.

⊼ ⊻ SEEK tuning

Push SEEK/TRACK tuning button (⊼ or ⊻). SEEK tuning begins from low to high frequencies or high to low frequencies, depending on which button is pressed, and stops at the next broadcasting station. If using the up button, once the highest broadcasting station is reached, the radio continues in the SEEK mode at the lowest broadcasting station. If using the down button, once the lowest broadcasting station is reached, the radio continues in the SEEK mode at the highest broadcasting station.

SCAN tuning

Push the SCAN button. SCAN illuminates in the display window. SCAN tuning begins from low to high frequencies. SCAN tuning stops for 5 seconds at each broadcasting station that has sufficient signal strength. When scanning, SCAN blinks in the display. Pushing the SCAN button again during this 5 second period stops SCAN tuning and the radio remains tuned to that station.

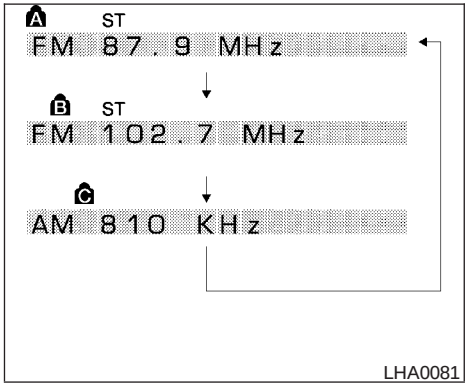

Station memory operation — Travel Preset is OFF

Each preset mode (A, B or C) has 6 presets, capable of storing any combination of AM, FM and FM RDS stations.

Press the PRESET ABC button to change between the presets:

A→B→C

The radio displays icon A, B or C to indicate which set of presets is active.

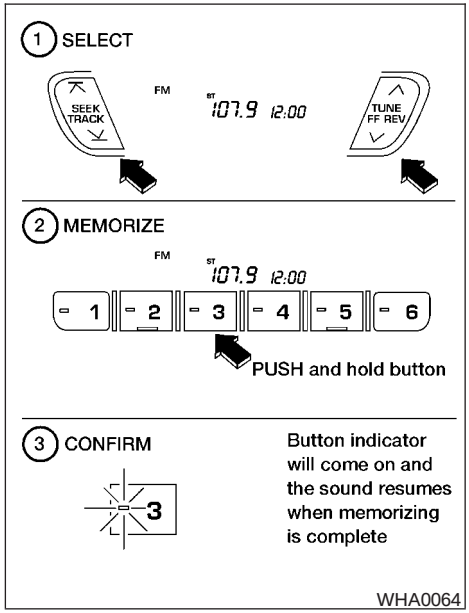

To store a radio station in a preset:

1. Tune to the desired station.
2. Press the desired station select button (>2 seconds). For example, in the illustrations ch3 is to be memorized.
3. When the indicator illuminates in the station selection button, a beep will sound indicating memorization is complete. For FM stations, the indicator will turn green. For AM stations, the indicator will turn amber.
4. Other station select buttons can be set in the same manner.

If the battery cable is disconnected, or if the radio fuse opens, the radio memory is canceled. In that case, reset the desired stations.

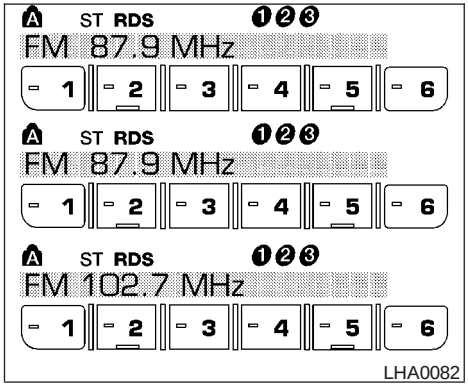

Turning ON travel preset

1. Press the TRAVEL PRESET button (<1.5 seconds). The green TRAVEL PRESET button indicator turns on.
2. The radio selects the strongest stations in the area and stores them in Travel Presets A, B and C. 12 FM stations and 6 AM stations are the default settings. To change the default settings, see “Editing Travel Preset” later in this section.
3. When finished storing radio stations, the radio tunes to the first stored preset of Travel Preset A.
4. If the radio cannot find any stations, the radio displays **“NO STATION”** and mutes the audio.
5. If the radio cannot fill all the presets, the remaining presets are stored with 87.9 for FM and 600 for AM.

The TUNE, SCAN, SEEK and preset memory functions are available while Travel Preset mode is on.

Canceling travel preset

Press the TRAVEL PRESET button (<1.5 seconds) to clear the Travel Preset memory. This turns off the green indicator. The radio returns to the last used preset of A, B or C in the permanent preset memory.

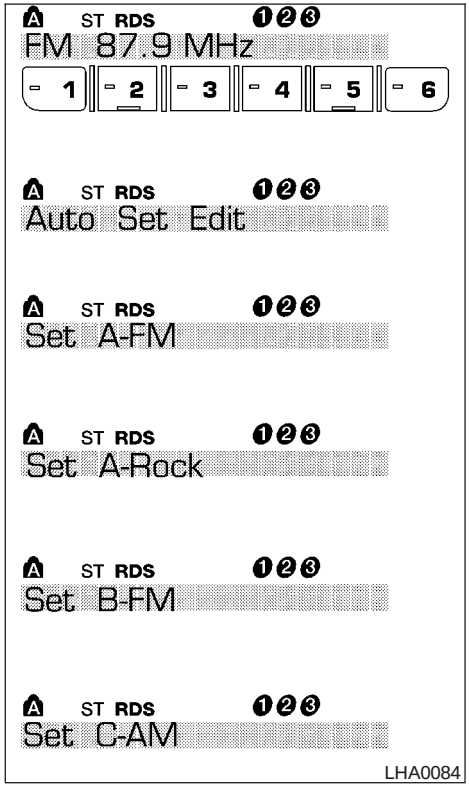

Editing travel preset

1. Press and hold the TRAVEL PRESET button (>3 seconds) until the radio beeps to start the editing mode. The green Travel Preset indicator will flash while in TRAVEL PRESET EDIT mode.
2. The radio displays **"TRAVEL EDIT"** for 2 seconds and then changes to **"SET A-*"** .
3. Press TUNE/FF-REV (∨ or ∧) to select a mode.
4. Press the TRAVEL PRESET button to save the mode.
5. Display is changed to **"SET B-*"** , repeat steps 3 and 4.
6. Display is changed to **"SET C-*"** , repeat step 3.
7. Press the TRAVEL PRESET button to exit the edit mode and return to normal mode.

*: AM, FM, FM RDS, Rock, Classic Rock, Soft Rock, Top 40, Country, Jazz, Classical, Oldies, News, Sports, Talk.

Storing Travel Preset stations in permanent memory

1. While in Travel Preset mode, press and hold the TRAVEL PRESET button until it beeps (>3 seconds).
2. The presets are transferred from Travel Preset memory to the permanent preset memory for A, B, and C. **"PRESETS LOADED"** is displayed.
3. The TRAVEL PRESET indicator turns off.

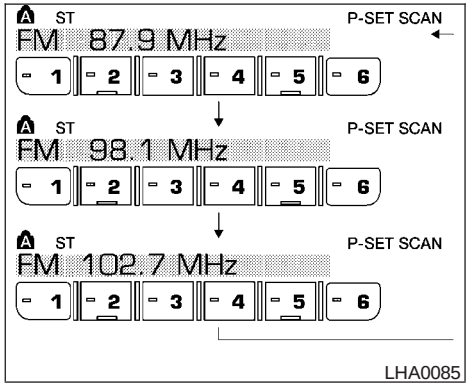

Preset scan

Pressing the PRESET SCAN button (<1.5 seconds) scans the permanent preset memory that is selected (A, B or C) from 1–6 for 5 seconds. If the Travel Preset is ON, the travel preset that is selected (A, B or C) from 1–6 is scanned for 5 seconds.

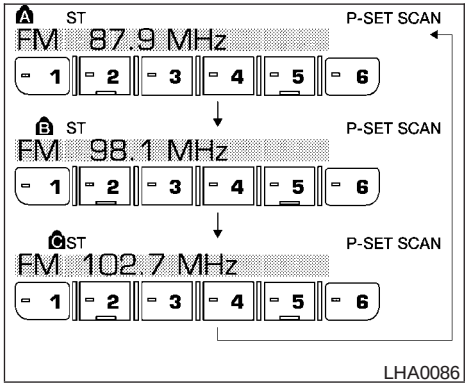

All preset scan

Pressing the PRESET SCAN button (>1.5 seconds) scans all the permanent preset memory banks (A, B or C) from 1–6 for 5 seconds. If the Travel Preset is ON, all the travel preset memory banks (A, B or C) from 1–6 are scanned for 5 seconds.

Canceling preset scan mode

Pressing any button except CLOCK, EJECT and PTY cancels the Preset Scan mode.

RDS (radio data system)

RDS stands for Radio Data System, and is a data information service transmitted by some radio stations on the FM band (not AM band) encoded within a regular radio broadcast. Currently, most RDS stations are in large cities, but many stations are now considering broadcasting RDS data.

RDS can display:

- Station call sign, such as “WHFR 98.3”.
- Station name, such as “The Groove”.
- Music or programming type, such as “Classical”, “Country”, or “Rock”.
- Traffic reports about delays or construction.

If the station broadcasts RDS information the RDS icon is displayed. The RDS information will be displayed according to the option chosen in the RDS setup mode. (FM & RDS is the default.) Press the RDS button again to display the frequency for 3 seconds. The radio will then return to the normal display. If the station does not broadcast RDS information, the RDS icon will not be displayed.

Setting RDS mode

Press and RDS button (>3 seconds) until the display shows **“RDS SET MODE”** . This display will last 2 seconds and then change to **“TRAFFIC-OFF”** . Press TUNE/FF-REV (∨ or ∧) to toggle the RDS traffic mode from “OFF” to “ON”. Press the RDS button again to set your RDS traffic mode selection.

The display changes to **“SHOW”** for the second part of the RDS mode selection. Press TUNE/FF-REV (∨ or ∧) to switch between the following RDS display modes:

- “FM & RDS”: the radio display will show the station’s broadcast frequency and the station’s name.
- “RDS ONLY”: the radio display will show the station’s name only.
- “RDS TEMP”: the radio display will show the station’s name for 5 seconds and then display only the radio station’s broadcast frequency.

PTY (program type)

PTY can be used to search for a certain program type. Certain areas have a limited number of stations that transmit RDS. Many stations transmit call letters and frequencies only. Searching or scanning by program type may yield a limited number of selections.

1. Press the PTY button. The display changes from **“RDS PTY SEARCH”** to **“SELECT BY TUNE”** .
2. Press TUNE/FF-REV (∨ or ∧) up/down button to choose a specific program type:

   ROCK, CLASSIC ROCK, SOFT ROCK, TOP 40, COUNTRY, JAZZ, CLASSICAL, OLDIES, NEWS, SPORTS, TALK, ANY

3. Press the SEEK or SCAN button to search for the next station with the selected PTY. The SCAN icon flashes when the SCAN button is pressed. The radio continues to seek or scan until a radio station is found matching the selected PTY
4. Press the PTY button again to cancel the PTY SEEK mode.

Compact disc (CD) player operation

Turn the ignition key to the ACC or ON position.

⚠ CAUTION

- **Do not force a compact disc into the CD insert slot. This could damage the CD and/or CD changer/player.**
- **Trying to load a CD with the CD door closed could damage the CD and/or CD changer.**

CD button

When the CD button is pressed with a compact disc loaded and the radio playing, the radio turns off and the last used compact disc starts to play.

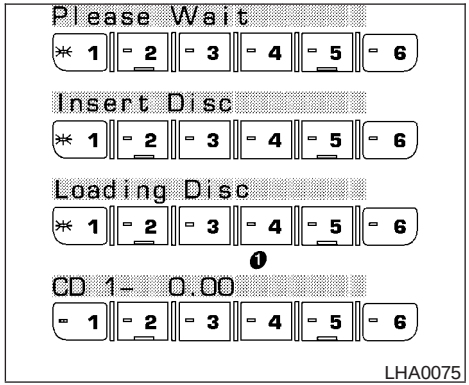

CD loading

Press the LOAD button to start CD loading mode.

The following sequence will occur:

1. The **green** indicator on the lowest available disc select button will start blinking. (Same as preset memory button.) The display shows **"Please Wait"** .
2. The display changes to **"Insert Disc"** for a maximum of 15 seconds.
3. During the 15 second interval, insert the disc. The display changes to **"Loading Disc"** .
4. The CD will play after the disc is set to a play position.
5. The indicator changes from **blinking green** to **solid green** and the display changes to show the Disc number icon, Disc number, Track number and Elapsed time.

All disc loading

1. Press and hold the LOAD button until the radio beeps (>1.5 seconds).
2. The **green** indicator on the lowest available disc select button will start blinking. (Same as preset memory button.) The display shows **"Please Wait".**
3. The display changes to **"Insert Disc"** for a maximum of 15 seconds.
4. During the 15 second interval, insert the disc. The display changes to **"Loading Disc".**
5. The indicator changes from **blinking green** to **solid green.**
6. The disc number icon is turned on.

7. Repeat steps 2–5 until all discs are loaded, then the last loaded disc will begin to play. The display shows the Disc number, Track number and Elapsed Time.

Selected disc loading

1. Press an available disc select button whose indicator is off. The display shows **“Please Wait”.**
2. The **green** indicator starts blinking and the display shows **“Insert Disc”** for 15 seconds.
3. Insert the CD. The display shows **“Loading Disc”.**
4. The CD will play after the disc is set to a play position.
5. The indicator color changes from **blinking green** to **solid green** and the display shows the Disc icon, Disc number, Track number and Elapsed Time.

If a disc is not inserted within 15 seconds or if the load button is pressed during load sequence, the entire disc load sequence will be canceled.

Disc play

Press the CD button. If a CD is loaded and the radio is playing, the radio turns off and the last loaded disc starts to play.

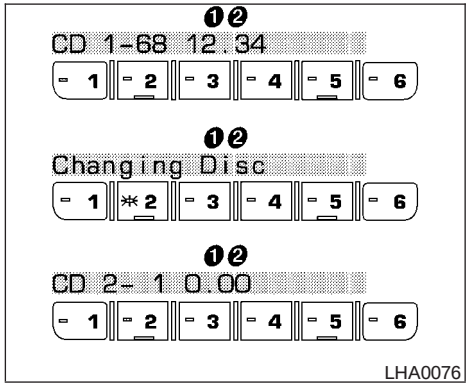

Selected disc play

1. Press the disc select button whose disc icon is displayed.
2. The indicator blinks **green** during the change and the display shows **“Changing Disc”** .
3. The CD plays after the disc is set to a play position.
4. The indicator changes from **blinking green** to **solid green** and the display shows the Disc number, Track number and Elapsed Time.

FF (fast forward) REW (rewind) buttons

When the TUNE/FF-REV (∨ or ∧) button is pressed while the compact disc is playing, the compact disc plays at an increased speed while fast forwarding or rewinding. When the button is released, the CD returns to normal play speed.

SEEK/TRACK buttons

When ⊼ is pressed while the compact disc is playing, the selection following the present one starts to play from the beginning. Press ⊼ several times to skip several selections. Each time the button is pressed, the CD advances 1 additional selection. The track number appears in the display window. (When the last selection on the compact disc is skipped, the first selection is played.)

When ⊻ is pressed, the selection being played returns to the beginning. Press ⊻ several times to skip back several selections. Each time the button is pressed, the CD moves back 1 selection. If the play pattern is in MIX mode when the button is pressed the next random selection will be played.

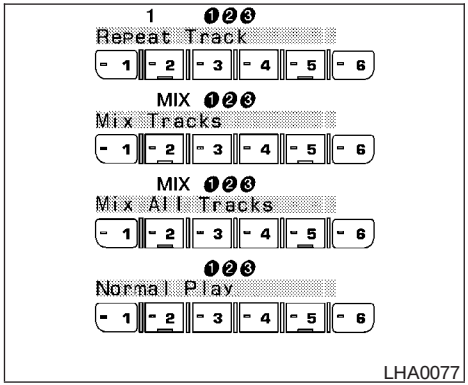

RPT MIX **Repeat/Mix**

Press the RPT MIX button to change CD play patterns:

Repeat→Mix→All Mix→Normal Play

Repeat

Press the RPT MIX button (<1.5 seconds) once to repeat the current track. The "1" icon is turned on, and the display shows **"Repeat Track"** for 2 seconds. The display then shows the Track number and Elapsed time as normal.

Mix

Press the RPT MIX button (<1.5 seconds) again to start shuffle play of the current disc. The "MIX" icon is turned on and the display shows **"Mix Tracks"** for 2 seconds. The display then shows the Track number and Elapsed time as normal.

All mix

Press the RPT MIX button (<1.5 seconds) again to start shuffle play of all discs. The "MIX" icon is turned on, and the display shows **"Mix All Tracks"** for 2 seconds. The display then shows the Track number and Elapsed time as normal. Also, the indicators of the loaded discs are turned on with amber color. (Green for current disc.)

Normal play

Press the RPT MIX button (<1.5 seconds) again to return to normal play mode. The "MIX" icon and the amber LEDs are turned off. The display shows **"Normal Play"** for 2 seconds. The display then shows the Track number and Elapsed time as normal.

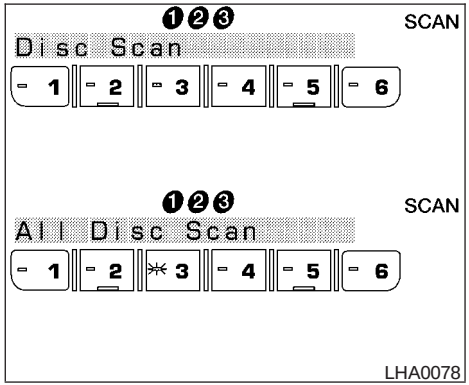

CD scan

1 Disc All Tracks

Press the SCAN button (<1.5 seconds) to scan all tracks of the current disc for 7 seconds per track. The display shows **"Disc Scan"** for 2 seconds, and then shows the track number and elapsed time as normal. The SCAN icon is flashed during Scan mode.

The Scan mode is canceled once it scans through all tracks on the disc, or if the SCAN button is pressed during Scan mode.

All Discs, 1 Track

Press and hold the SCAN button (>1.5 seconds) to scan the first track of all the loaded discs for 7 seconds per track. The display shows **“All Disc Scan”** for 2 seconds, and then shows the track number and elapsed time as normal. The SCAN icon is flashed during Scan mode.

The Scan mode is canceled once it scans through all the loaded discs, or if the SCAN button is pressed during Scan mode.

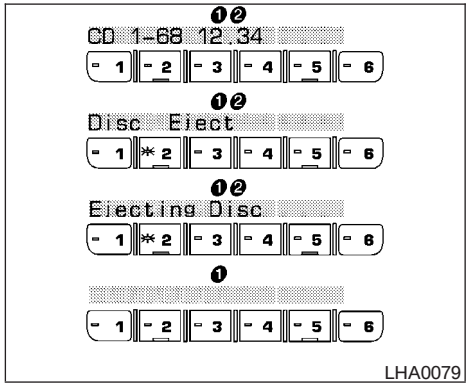

Eject CD

Current disc

1. Press the ⏏ button.
2. The **green** indicator starts to blink and the display shows **“Disc Eject”** for 2 seconds. The display then changes to **“Ejecting Disc”** .
3. The disc ejects. Remove the disc. (If the disc is not removed within 15 seconds, the disc will reload.)
4. The indicator and symbol for the disc are turned off.

Select a disc

1. Press the desired disc, then press the ⏏ button.
2. The **green** indicator starts blinking and the display shows **“Disc Eject”** for 2 seconds. The display then changes to **“Ejecting Disc”** .
3. The disc ejects. Remove the disc. (If the disc is not removed within 15 seconds, the disc will reload.)
4. The indicator and symbol for the disc are turned off.

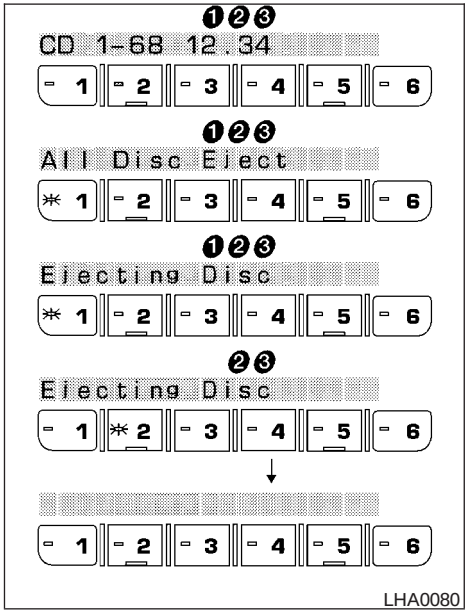

LHA0080

All discs

1. Press and hold the ⏏ button until it beeps (>1.5 seconds).
2. Lowest used disc number indicator blinks **green** and display shows **"All Disc Eject"** for 2 seconds. The display then changes to **"Ejecting Disc"** .
3. When a disc is removed, the indicator and disc icon will be turned off, and then the next disc will emerge, and so on.
4. The display will be turned off after all discs are ejected and removed.

If a disc is not removed within 15 seconds, or if the ⏏ button is pressed again during the Eject sequence, the entire disc Eject sequence will be canceled.

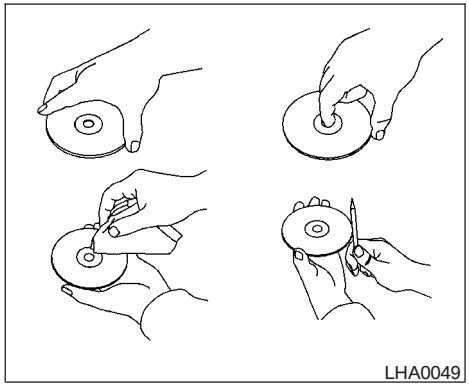
LHA0049

CD CARE AND CLEANING

- Handle a CD by its edges. Do not bend the disc. Never touch the surface of the disc.
- Always place the discs in the storage case when they are not being used.
- To clean a disc, wipe the surface from the center to the outer edge using a clean, soft cloth. Do not wipe the disc using a circular motion.
- Do not use a conventional record cleaner or alcohol intended for industrial use.
- A new disc may be rough on the inner and outer edges. Remove the rough edges by rubbing the inner and outer edges with the side of a pen or pencil as illustrated.

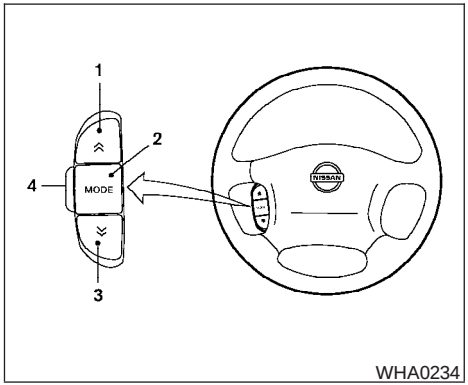

1. SEEK up button
2. Mode button
3. SEEK down button
4. Volume control button

STEERING WHEEL SWITCH FOR AUDIO CONTROL (if so equipped)

The steering wheel switch for audio controls is mounted on the left side of the steering wheel.

Press the MODE button to turn the radio on or, if the radio is already on, to switch between the Radio presets (A, B or C) and CD Mode.

A→B→C→CD Mode

The last CD that was loaded starts to play when in CD Mode. If there is no CD loaded, the CD changer enters Disc Loading Mode.

If in Radio presets A, B or C:

- Press ≫ or ≪ (<1.5 seconds) to advance to the next preset station or to return to the previous preset station.
- Hold down ≫ or ≪ (>1.5 seconds). The radio will seek up or down to the next radio station.

If in CD Mode:

- Press ≫ or ≪ (<1.5 seconds) to advance to the next selection on the CD or return to the previous selection on the CD.
- Hold down ≫ or ≪ (>1.5 seconds) to advance to the next CD or return to the previous CD.

Volume control is located on the side of the audio control switch. Press the top of the volume control to increase volume. Press the bottom of the volume control to decrease volume.

ANTENNA

The antenna cannot be shortened, but can be removed. When you need to remove the antenna, turn the antenna rod counterclockwise.

To install the antenna rod, turn the antenna clockwise. Tighten the antenna rod to specification using a suitable tool such as an open-end wrench. The antenna rod tightening specification is 3.4 - 3.6 N·m (30 - 32 in-lb). Do not use pliers to tighten the antenna as they can leave marks on the antenna surface. The antenna rod cannot be hand tightened to the proper specification.

⚠ CAUTION

Always properly tighten the antenna rod during installation or the antenna rod may break during vehicle operation.

CAR PHONE OR CB RADIO

When installing a CB, ham radio or car phone in your NISSAN, be sure to observe the following cautions, otherwise the new equipment may adversely affect the engine control system and other electronic parts.

⚠ WARNING

- **A cellular telephone should not be used while driving so full attention may be given to vehicle operation. Some jurisdictions prohibit the use of cellular telephones while driving.**
- **If you must make a call while your vehicle is in motion, the hands free cellular phone operational mode (if so equipped) is highly recommended. Exercise extreme caution at all times so full attention may be given to vehicle operation.**
- **If a conversation in a moving vehicle requires you to take notes, pull off the road to a safe location and stop your vehicle before doing so.**

⚠ CAUTION

- **Keep the antenna as far away as possible from the electronic control modules.**
- **Keep the antenna wire more than 8 in (20 cm) away from the electronic control system. Do not route the antenna wire next to any harness.**
- **Adjust the antenna standing-wave ratio as recommended by the manufacturer.**
- **Connect the ground wire from the CB radio chassis to the body.**
- **For details, consult a NISSAN dealer.**

MEMO

5 Starting and driving

Precautions when starting and driving. 5-2
Exhaust gas (carbon monoxide) 5-2
Three-way catalyst. 5-2
Low tire pressure warning system 5-3
On-pavement and off-road driving precautions 5-4
Avoiding collision and rollover. 5-4
Drinking alcohol/drugs and driving. 5-5
Driving safety precautions 5-5
Ignition switch. 5-7
Automatic transmission. 5-7
Manual transmission 5-8
Key positions 5-8
Before starting the engine 5-8
Starting the engine 5-9
Driving the vehicle 5-10
Automatic transmission (if so equipped). 5-10
Manual transmission 5-16
Parking brake 5-18
Cruise control (if so equipped) 5-19
Precautions on cruise control 5-19
Cruise control operations. 5-19
Break-in schedule 5-20
Increasing fuel economy. 5-21
4x4 Using four wheel drive (4WD) 5-21
Transfer case shifting procedures 5-21
4x4 Auto-lock free-running hubs. 5-22
Parking/parking on hills. 5-25
Power steering 5-26
Brake system 5-27
Brake precautions 5-27
Anti-lock brake system (ABS) 5-27
Vehicle dynamic control (VDC) system (if so equipped) 5-29
Cold weather driving 5-30
Freeing a frozen door lock 5-30
Anti-freeze. 5-30
Battery 5-30
Draining of coolant water 5-30
Tire equipment 5-30
Special winter equipment. 5-31
Driving on snow or ice 5-31
Engine block heater (if so equipped). 5-31

⚠ WARNING

- **On hot, sunny days, temperatures in a closed vehicle could quickly become high enough to cause severe or possibly fatal injuries to people or animals. Do not leave children or adults who would normally require the support of others in your vehicle. Unattended pets should not be left alone either.**
- **Properly secure all cargo with ropes or straps to help prevent it from sliding or shifting. Do not place cargo higher than the seatbacks. In a sudden stop or collision, unsecured cargo could cause personal injury.**

EXHAUST GAS (carbon monoxide)

⚠ WARNING

- **Do not breathe exhaust gases; they contain colorless and odorless carbon monoxide. Carbon monoxide is dangerous. It can cause unconsciousness or death.**
- **If you suspect that exhaust fumes are entering the vehicle, drive with all windows fully open, and have the vehicle inspected immediately.**
- **Do not run the engine in closed spaces such as a garage.**
- **Do not park the vehicle with the engine running for any extended length of time.**
- **If a special body, camper, or other equipment is added for recreational or other usage, follow the manufacturer's recommendation to prevent carbon monoxide entry into the vehicle. Do not occupy these areas while the engine is running even if the vehicle is parked. Some recreational vehicle appliances such as stoves, refrigerators, heaters, etc. may also generate carbon monoxide.**
- **The exhaust system and body should be inspected by a qualified mechanic whenever:**
  a. **The vehicle is raised for service.**
  b. **You suspect that exhaust fumes are entering into the passenger compartment.**
  c. **You notice a change in the sound of the exhaust system.**
  d. **You have had an accident involving damage to the exhaust system, underbody, or rear of the vehicle.**

THREE-WAY CATALYST

The three-way catalyst is an emission control device installed in the exhaust system. Exhaust gases in the three-way catalyst are burned at high temperatures to help reduce pollutants.

⚠ WARNING

- **The exhaust gas and the exhaust system are very hot. Keep people, animals or flammable materials away from the exhaust system components.**
- **Do not stop or park the vehicle over flammable materials such as dry grass, waste paper or rags. They may ignite and cause a fire.**

⚠ CAUTION

- **Do not use leaded gasoline. Deposits from leaded gasoline will seriously reduce the three-way catalyst's ability to help reduce exhaust pollutants.**

- **Keep your engine tuned up. Malfunctions in the ignition, fuel injection, or electrical systems can cause overrich fuel flow into the three-way catalyst, causing it to overheat. Do not keep driving if the engine misfires, or if noticeable loss of performance or other unusual operating conditions are detected. Have the vehicle inspected promptly by a NISSAN dealer.**
- **Avoid driving with an extremely low fuel level. Running out of fuel could cause the engine to misfire, damaging the three-way catalyst.**
- **Do not race the engine while warming it up.**
- **Do not push or tow your vehicle to start the engine.**

LOW TIRE PRESSURE WARNING SYSTEM

This vehicle is equipped with the low tire pressure warning system. It monitors tire pressure of all tires except the spare. When the low tire pressure warning light it lit, one or more of your tires is significantly under-inflated.

The low tire pressure warning system will activate only when the vehicle is driven at speeds above 20 MPH (32 km/h). Also, this system may not detect a sudden drop in tire pressure (for example a flat tire while driving).

Tire pressure rises and falls depending on the heat caused by the vehicle's operation and the outside temperature. Low outside temperature can lower the temperature of the air inside the tire which can cause a lower tire inflation pressure. This may cause the low tire pressure warning light to illuminate.

If the warning light illuminates in low ambient temperature as described above, check the tire pressure for all four tires. Adjust the tire pressure to the recommended COLD tire pressure shown on the tire placard to turn the low tire pressure warning light OFF.

Frequently check the tire pressure and adjust pressure of each tire properly.

Low tire pressure warning

If the vehicle is being driven with low tire pressure (lower than 28 psi, 193 kPa), the low tire pressure warning light comes on and the chime sounds for about 10 seconds.

For additional information regarding the above warning, see "Warning/indicator lights and audible reminders" in the "Instruments and controls" section.

⚠ WARNING

- **If the low tire pressure warning light flashes while driving, avoid sudden steering maneuvers or abrupt braking, reduce vehicle speed, pull off the road to a safe location and stop the vehicle as soon as possible. Serious vehicle damage could occur and may lead to an accident and could result in serious personal injury. Check the tire pressure for all four tires. Adjust the tire pressure to the recommended COLD tire pressure shown on the tire placard to turn the low tire pressure warning light OFF. If you have a flat tire, replace it with a spare tire as soon as possible. (See "Flat tire" in the "In case of emergency" section for changing a flat tire.)**
- **When a spare tire is mounted or a wheel is replaced, tire pressure will not be indicated and the low tire pressure warning system will not function. Contact your NISSAN dealer as soon as possible for tire replacement and/or system resetting.**
- **Do not inject any tire liquid or aerosol tire sealant into the tires, as this may cause a malfunction of the tire pressure sensors.**

⚠ CAUTION

Do not place metalized film or any metal parts (antenna, etc.) on the windows. This may cause poor reception of the signals from the tire pressure sensors, and the low tire pressure warning system will not function properly.

FCC Notice:

Changes or modifications not expressly approved by the manufacturer compliance could void the user's authority to operate the equipment.

This device complies with Part 15 of the FCC Rules and RSS-210 of Industry Canada.

Operation is subject to the following two conditions: (1) This device may not cause harmful interface, and (2) this device must accept any interference received, including interference that may cause undesired operation of the device.

ON-PAVEMENT AND OFF-ROAD DRIVING PRECAUTIONS

Utility vehicles have a significantly higher rollover rate than other types of vehicles.

They have higher ground clearance than passenger cars to make them capable of performing in a variety of on-pavement and off-road applications. This gives them a higher center of gravity than ordinary cars. An advantage of higher ground clearance is a better view of the road, allowing you to anticipate problems. However, they are not designed for cornering at the same speeds as conventional two-wheel drive vehicles any more than low-slung sports cars are designed to perform satisfactorily under off-road conditions. If at all possible, avoid sharp turns at high speeds. As with other vehicles of this type, failure to operate this vehicle correctly may result in loss of control or vehicle rollover. In a rollover crash, an unbelted person is significantly more likely to die than a person wearing a seat belt.

Be sure to read the driving safety precautions later in this section.

AVOIDING COLLISION AND ROLLOVER

⚠ WARNING

Failure to operate this vehicle in a safe and prudent manner may result in loss of control or an accident.

Be alert and drive defensively at all times. Obey all traffic regulations. Avoid excessive speed, high speed cornering, or sudden steering maneuvers, because these driving practices could cause you to lose control of your vehicle. **As with any vehicle, loss of control could result in a collision with other vehicles or objects, or cause the vehicle to roll over, particularly if the loss of control causes the vehicle to slide sideways.** Be attentive at all times, and avoid driving when tired. Never drive when under the influence of alcohol or drugs (including prescription or over-the-counter drugs which may cause drowsiness). Always wear your seat belt as outlined in the "Safety – Seats, seat belts and supplemental air bags" section of this manual, and also instruct your passengers to do so.

Seat belts help reduce the risk of injury in collisions and rollovers. **In a rollover crash, an unbelted or improperly belted person is**

significantly more likely to be injured or killed than a person properly wearing a seat belt.

DRINKING ALCOHOL/DRUGS AND DRIVING

⚠WARNING

Never drive under the influence of alcohol or drugs. Alcohol in the bloodstream reduces coordination, delays reaction time and impairs judgement. Driving after drinking alcohol increases the likelihood of being involved in an accident injuring yourself and others. Additionally, if you are injured in an accident, alcohol can increase the severity of the injury.

NISSAN is committed to safe driving. However, you must choose not to drive under the influence of alcohol. Every year thousands of people are injured or killed in alcohol-related accidents. Although the local laws vary on what is considered to be legally intoxicated, the fact is that alcohol affects all people differently and most people underestimate the effects of alcohol.

Remember, drinking and driving don't mix! And that is true for drugs, too (over-the-counter, prescription, and illegal drugs). Don't drive if your ability to operate your vehicle is impaired by alcohol, drugs, or some other physical condition.

DRIVING SAFETY PRECAUTIONS

Your NISSAN is designed for both normal and off-road use. However, avoid driving in deep water or mud as your NISSAN is mainly designed for leisure use, unlike a conventional off-road vehicle.

Remember that two-wheel drive models are less capable than four-wheel drive models for rough road driving and extrication when stuck in deep snow or mud, or the like.

Please observe the following precautions:

⚠WARNING

- **Drive carefully when off the road and avoid dangerous areas. Every person who drives or rides in this vehicle should be seated with their seat belt fastened. This will keep you and your passengers in position when driving over rough terrain.**
- **Do not drive across steep slopes. Instead drive either straight up or straight down the slopes. Off-road vehicles can tip over sideways much more easily than they can forward or backward.**
- **Many hills are too steep for any vehicle. If you drive up them, you may stall. If you drive down them, you may not be able to control your speed. If you drive across them, you may roll over.**
- **Do not shift gears while driving on downhill grades as this could cause loss of control of the vehicle.**
- **Stay alert when driving to the top of a hill. At the top there could be a drop-off or other hazard that could cause an accident.**
- **If your engine stalls or you cannot make it to the top of a steep hill, never attempt to turn around. Your vehicle could tip or roll over. Always back straight down in R (Reverse) gear. Never back down in N (Neutral) or with the clutch depressed (manual transmission vehicles), using only the brake, as this could cause loss of control.**
- **Heavy braking going down a hill could cause your brakes to overheat and fade, resulting in loss of control and an accident. Apply brakes lightly and use a low gear to control your speed.**

- **Unsecured cargo can be thrown around when driving over rough terrain. Properly secure all cargo so it will not be thrown forward and cause injury to you or your passengers.**
- **To avoid raising the center of gravity excessively, do not exceed the rated capacity of the roof rack (if so equipped) and evenly distribute the load. Secure heavy loads in the cargo area as far forward and as low as possible. Do not equip the vehicle with tires larger than specified in this manual. This could cause your vehicle to roll over.**
- **Do not grip the inside or spokes of the steering wheel when driving off-road. The steering wheel could move suddenly and injure your hands. Instead drive with your fingers and thumbs on the outside of the rim.**
- **Before operating the vehicle, ensure that the driver and all passengers have their seat belts fastened.**
- **Always drive with the floor mats in place as the floor may become hot.**
- **Lower your speed when encountering strong crosswinds. With a higher center of gravity, your NISSAN is more affected by strong side winds. Slower speeds ensure better vehicle control.**
- **Do not drive beyond the performance capablity of the tires, even with 4WD engaged.**
- **Accelerating quickly, sharp steering maneuvers or sudden braking may cause loss of control.**
- **If at all possible, avoid sharp turning maneuvers, particularly at high speeds. Your NISSAN four-wheel drive vehicle has a higher center of gravity than a two-wheel drive vehicle. The vehicle is not designed for cornering at the same speeds as conventional two-wheel drive vehicles. Failure to operate this vehicle correctly could result in loss of control and/or a rollover accident.**
- **Always use tires of the same type, size, brand, construction (bias, bias-belted, or radial), and tread pattern on all four wheels. Install tire chains on the rear wheels when driving on slippery roads and drive carefully.**
- **Be sure to check the brakes immediately after driving in mud or water. See "Brake system" later in this section for "Wet brakes".**
- **Avoid parking your vehicle on steep hills. If you get out of the vehicle and it rolls forward, backward or sideways, you could be injured.**
- **Whenever you drive off-road through sand, mud or water as deep as the wheel hub, more frequent maintenance may be required. See "Periodic maintenance" in the "NISSAN Service and Maintenance Guide."**

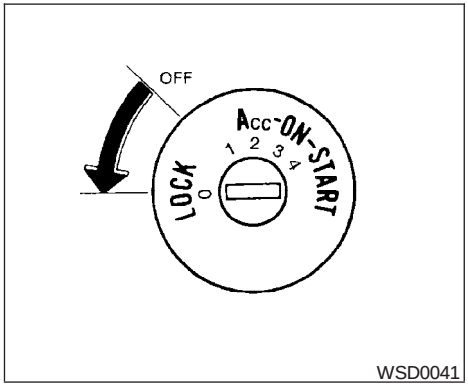

WSD0041

AUTOMATIC TRANSMISSION

On automatic transmission models, the ignition lock is designed so the key cannot be turned to LOCK position and removed until the shift selector lever is moved to the P (Park) position.

When removing the key from the ignition, make sure the shift selector lever is in the P (Park) position.

If the selector lever is not returned to P (Park) position, the key cannot be moved to the LOCK position.

When the key cannot be turned to the LOCK position, proceed as follows to remove the key.

1. Move the shift selector lever into the P (Park) position.
2. Turn the ignition key slightly toward the ON position.
3. Turn the key to the LOCK position.
4. Remove the key.

The shift selector lever is designed so it cannot moved out of P (Park) and into any of the other gear positions if the ignition key is turned to OFF position or if the key is removed from the switch.

The shift selector lever can be moved if the ignition switch is in the ON position and the foot brake pedal is depressed.

There is an OFF position between the LOCK and ACC positions. The OFF position is indicated by a “1” on the key cylinder. When the ignition is in the OFF position, the steering wheel is not locked.

In order for the steering wheel to be locked, it must be turned about 1/8 of a turn clockwise from the straight up position.

To lock the steering wheel, turn the key to the LOCK position. Remove the key. To unlock the steering wheel, insert the key and turn it gently while rotating the steering wheel slightly right and left.

⚠ WARNING

Never remove or turn the key to the LOCK position while driving. The steering wheel will lock. This may cause the driver to lose control of the vehicle and could result in serious vehicle damage or personal injury.

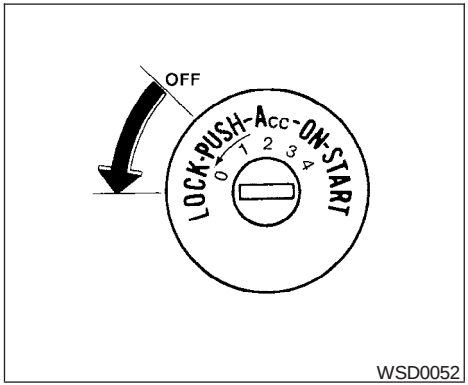

MANUAL TRANSMISSION

The ignition switch includes a device that helps prevent accidental removal of the key while driving.

The key can only be removed when the ignition switch is in the LOCK position.

On manual transmission models, to turn the ignition key to LOCK position from ACC or ON position, turn the key to OFF, push the key in, then turn the key to LOCK.

In order for the steering wheel to be locked, it must be turned about 1/8 of a turn clockwise from the straight up position.

To lock the steering wheel, turn the key to the LOCK position. Remove the key. To unlock the steering wheel, insert the key and turn it gently while rotating the steering wheel slightly right and left.

⚠ WARNING

Never remove or turn the key to the LOCK position while driving. The steering wheel will lock. This may cause the driver to lose control of the vehicle and could result in serious vehicle damage or personal injury.

KEY POSITIONS

LOCK: Normal parking position (0)

OFF: (Manual transmission model) (1)

The engine can be turned off without locking the steering wheel.

ACC: (Accessories) (2)

This position activates electrical accessories such as the radio when the engine is not running.

ON: Normal operating position (3)

This position turns on the ignition system and the electrical accessories.

START: (4)

This position starts the engine. As soon as the engine has started, release the key. It automatically returns to the ON position.

- Make sure the area around the vehicle is clear.
- Check fluid levels such as engine oil, coolant, brake and clutch fluid, and window washer fluid as frequently as possible, or at least whenever you refuel.
- Check that all windows and lights are clean.
- Visually inspect tires for their appearance and condition. Also check tires for proper inflation.
- Lock all doors.
- Position seat and adjust head restraints.
- Adjust inside and outside mirrors.
- Fasten seat belts and ask all passengers to do likewise.
- Check the operation of warning lights when the key is turned to the ON (3) position. See “Warning/indicator lights and audible reminders” in the “Instruments and controls” section of this manual.

STARTING THE ENGINE

1. Apply the parking brake.
2. **Automatic transmission:**

   Move the shift selector lever to P (Park) or N (Neutral). P (Park) is recommended.

   The shift selector lever cannot be moved out of P (Park) and into any of the other gear positions if the ignition key is turned to the OFF position or if the key is removed from the ignition switch.

   The starter is designed not to operate if the shift selector lever is in any of the driving positions.

   Manual transmission:

   Move the shift lever to N (Neutral). Depress the clutch pedal to the floor while cranking the engine.

   The starter is designed not to operate unless the clutch pedal is fully depressed.
3. Crank the engine **with your foot off the accelerator pedal** by turning the ignition key to START. Release the key when the engine starts. If the engine starts, but fails to run, repeat the above procedure.

- If the engine is very hard to start in extremely cold weather or when restarting, depress the accelerator pedal a little (approximately 1/3 to the floor) and hold it and then crank the engine. Release the key and the accelerator pedal when the engine starts.
- If the engine is very hard to start because it is flooded, depress the accelerator pedal all the way to the floor and hold it. Crank the engine for 5-6 seconds. After cranking the engine, release the accelerator pedal. Crank the engine **with your foot off the accelerator pedal** by turning the ignition key to START. Release the key when the engine starts. If the engine starts, but fails to run, repeat the above procedure.

⚠ CAUTION

Do not operate the starter for more than 15 seconds at a time. If the engine does not start, turn the key off and wait 10 seconds before cranking again, otherwise the starter could be damaged.

4. Allow the engine to idle for at least 30 seconds after starting. Do not race the engine while warming it up. Drive at moderate speed for a short distance first, especially in cold weather.

   In cold weather, keep the engine running for a minimum of 2–3 minutes before shutting it off. Starting and stopping the engine over a short period of time may make the vehicle more difficult to start.

AUTOMATIC TRANSMISSION (if so equipped)

⚠ WARNING

- **Do not depress the accelerator pedal while shifting from P (Park) or N (Neutral) to R (Reverse), D (Drive), 2 or 1. Always depress the brake pedal until shifting is completed. Failure to do so could cause you to lose control and have an accident.**
- **Cold engine idle speed is high, so use caution when shifting into a forward or reverse gear before the engine has warmed up.**
- **Never shift to P (Park) or R (Reverse) while the vehicle is moving. This could cause an accident.**

⚠ CAUTION

- **When stopping the vehicle on an uphill grade, do not hold the vehicle by depressing the accelerator pedal. The foot brake should be used for this purpose.**
- **On slippery roads, do not downshift. This may cause a loss of control.**

The automatic transmission in your vehicle is electronically controlled to produce maximum power and smooth operation.

The recommended operating procedures for this transmission are shown on the following pages. Follow these procedures for maximum vehicle performance and driving enjoyment.

Starting the vehicle

1. After starting the engine, fully depress the foot brake pedal before attempting to move the shift selector lever out of the P (Park) position.
2. Keep the foot brake pedal depressed and move the shift selector lever into a driving gear.
3. Release the foot brake, then gradually start the vehicle in motion.

The automatic transmission is designed so the foot brake pedal MUST be depressed before shifting from P (Park) to any drive position while the ignition switch is in the ON position.

The shift selector lever cannot be moved out of P (Park) and into any of the other gear positions if the ignition key is turned to the LOCK position or if the key is removed.

The shift selector lever can be moved if the ignition switch is in the ACC position. This allows the vehicle to be moved if the battery is discharged. The shift selector lever can also be moved if the ignition switch is in the ON position and the foot brake pedal is depressed.

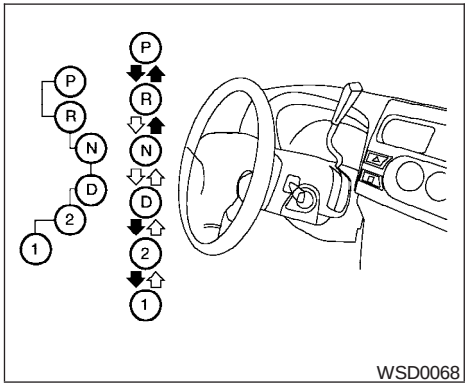

To move the selector lever:

⬆ : Pull lever toward you to shift

⇧ : Shift without pulling lever

Shifting (KA24DE engine)

Pull the shift selector lever to shift into P (Park), R (Reverse) or from D (Drive) to 2 or 1.

⚠ WARNING

Apply the parking brake if the selector lever is in any position while the engine is not running. Failure to do so could cause the vehicle to move unexpectedly or roll away and result in serious personal injury or property damage.

P (Park):

Use this selector position when the vehicle is parked or when starting the engine. Make sure the vehicle is completely stopped. **The brake pedal must be depressed and the selector lever button pushed in to move the selector lever from the N (Neutral) or any drive position to P (Park).** Apply the parking brake. When parking on a hill, apply the parking brake first, then shift the selector lever into the P (Park) position.

Shifting from P (Park)

If the ignition switch is in the ON position and the foot brake pedal is depressed, but the shift selector lever still cannot be moved out of P (Park), follow these instructions.

1. Turn the ignition key to the LOCK position.
2. Apply the parking brake.
3. Reinsert the key and turn it to the ACC position.
4. Depress the foot brake pedal and move the shift selector lever to N (Neutral).
5. Start the engine.

These instructions for starting the vehicle in N (Neutral) should only be used until service can be obtained at a NISSAN dealership.

R (Reverse):

⚠ CAUTION

Use this position only when the vehicle is completely stopped.

Use this position to back up. Make sure the vehicle is completely stopped before selecting R (Reverse) position. **The brake pedal must be depressed and the selector lever button pushed in to move the selector lever from P (Park), N (Neutral) or any drive position to R (Reverse).**

N (Neutral):

Neither forward nor reverse gear is engaged. The engine can be started in this position. You may shift to N (Neutral) and restart a stalled engine while the vehicle is moving.

D (Drive):

Use this position for all normal forward driving.

2 (Second gear)

Use this position for hill climbing or engine braking on downhill grades.

Do not shift into the 2 position at speeds above 58MPH (92 km/h). Do not exceed 58 MPH (92 km/h) in the 2 position.

1 (Low gear)

Use this position when climbing steep hills slowly or slow driving through deep snow, sand or mud, or for maximum engine braking on steep downhill grades.

Do not shift into the 1 position at speeds above 30 MPH (48 km/h). Do not exceed 30 MPH (48 km/h) in the 1 position.

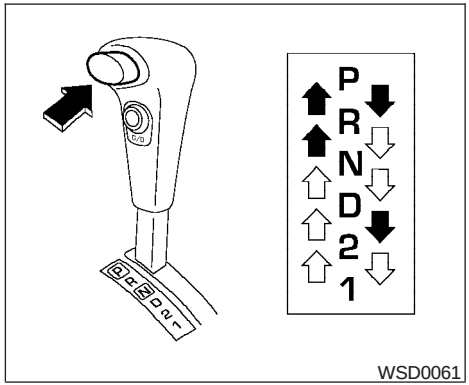

To move the selector lever:

⬆ : Depress the button to shift

⇧ : Shift without depressing button

Shifting (VG33E or VG33ER engine)

Push the shift selector lever button to shift into P (Park), R (Reverse) or from D (Drive) to 2. All other positions can be selected without pushing the button.

⚠WARNING

Apply the parking brake if the selector lever is in any position while the engine is not running. Failure to do so could cause the vehicle to move unexpectedly or roll away and result in serious personal injury or property damage.

P (Park):

Use this selector position when the vehicle is parked or when starting the engine. Make sure the vehicle is completely stopped. **The brake pedal must be depressed and the selector lever button pushed in to move the selector lever from the N (Neutral) or any drive position to P (Park).** Apply the parking brake. When parking on a hill, apply the parking brake first, then shift the selector lever into the P (Park) position.

Shifting from P (Park)

If the ignition switch is in the ON position and the foot brake pedal is depressed, but the shift selector lever still cannot be moved out of P (Park), follow these instructions.

1. Turn the ignition key to the LOCK position.
2. Apply the parking brake.

3. Reinsert the key and turn it to the ACC position.
4. Depress the foot brake pedal and move the shift selector lever to N (Neutral).
5. Start the engine.

These instructions for starting the vehicle in N (Neutral) should only be used until service can be obtained at a NISSAN dealership.

R (Reverse):

⚠ CAUTION

Use this position only when the vehicle is completely stopped.

Use this position to back up. Make sure the vehicle is completely stopped before selecting R (Reverse) position. **The brake pedal must be depressed and the selector lever button pushed in to move the selector lever from P (Park), N (Neutral) or any drive position to R (Reverse).**

N (Neutral):

Neither forward nor reverse gear is engaged. The engine can be started in this position. You may shift to N (Neutral) and restart a stalled engine while the vehicle is moving.

D (Drive):

Use this position for all normal forward driving.

2 (Second gear):

Use this position for hill climbing or engine braking on downhill grades.

Do not shift into the 2 position at speeds above 60 MPH (96 km/h). Do not exceed 60 MPH (96 km/h) in the 2 position.

1 (Low gear):

Use this position when climbing steep hills slowly or driving slowing through deep snow, sand or mud, or for maximum engine braking on steep downhill grades.

Do not shift into the 1 position at speeds above 31 MPH (50 km/h). Do not exceed 31 MPH (50 km/h) in the 1 position.

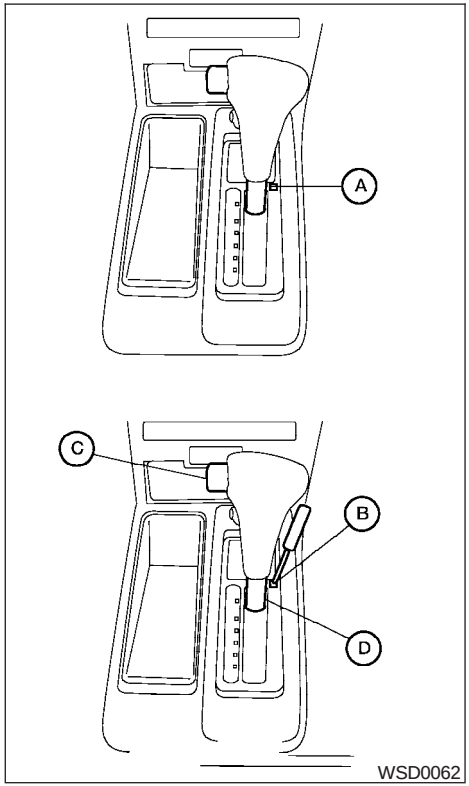

Shift lock release

If the battery is discharged, the shift selector lever may not be moved from the P (Park) position even with the brake pedal depressed and the shift selector lever button pushed.

To move the shift selector lever, release the shift lock and push the shift selector lever button. The shift selector lever can be moved to N (Neutral). However, the steering wheel will be locked unless the ignition switch is turned to the ON position.

To release the shift lock, complete the following procedure:

1. Turn the ignition key to the LOCK position and remove the key.
2. Apply the parking brake.
3. Remove the shift lock cover Ⓐ.
4. Insert a small screwdriver in the shift lock slot, and push down Ⓑ.
5. Push the shift selector lever button Ⓒ and move the shift selector lever to N (Neutral) position Ⓓ while holding down the shift lock.
6. Turn the key to the ON position to unlock the steering wheel. Now the vehicle may be moved to the desired location.

If the shift selector lever cannot be moved out of P (Park), have a NISSAN dealer check the automatic transmission system as soon as possible.

Accelerator downshift — in D position —

For passing or hill climbing, depress the accelerator pedal to the floor. This shifts the transmission down into a lower gear, depending on the vehicle speed.

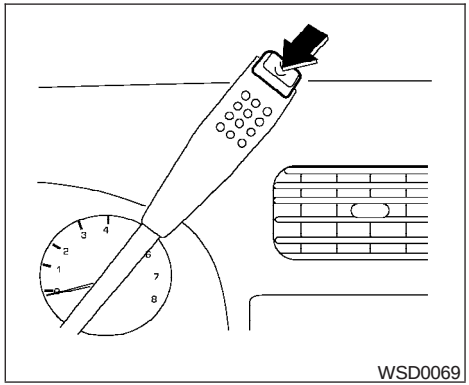

Overdrive switch (KA24DE engine type a)

ON: For typical driving, push the overdrive switch ON with the selector lever in the D (Drive) position. The transmission is upshifted into OVERDRIVE as the vehicle speed increases.

Overdrive does not engage until the engine has reached operating temperature.

OFF: For driving up and down long slopes where engine braking is necessary push the switch OFF . The indicator light in the instrument panel comes on at this time. When cruising at a low speed or climbing a gentle slope, you may feel uncomfortable shift shocks as the transmission repeatedly shifts between 3rd and overdrive. In this case, set the overdrive switch in the OFF position.

When driving conditions change, reset the overdrive switch in the ON position to turn the overdrive on. The indicator light goes out at this time.

Remember not to drive at high speeds for extended periods of time with the overdrive switch set in the OFF position. This reduces fuel economy.

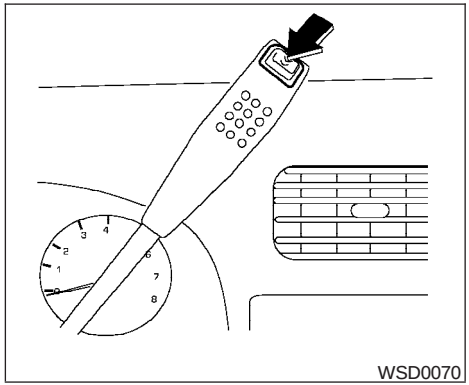

Overdrive switch (KA24DE engine type b)

Each time your vehicle is started, the transmission is automatically “reset” to overdrive ON.

ON: For normal driving the overdrive switch is engaged. The transmission is upshifted into overdrive as the vehicle speed increases.

The overdrive does not engage until the engine has reached operating temperature.

OFF: For driving up and down long slopes where engine braking is necessary, push the overdrive switch once. The O/D OFF indicator light illuminates at this time.

When cruising at a low speed or climbing a gentle slope, you may feel uncomfortable shift shocks as the transmission shifts between 3rd gear and overdrive repeatedly. In this case, press the overdrive switch.

When driving conditions change, press the overdrive switch to turn the Overdrive on. The O/D OFF indicator light goes out.

Remember not to drive at high speeds for extended periods of time with the O/D OFF light illuminated. This reduces fuel economy.

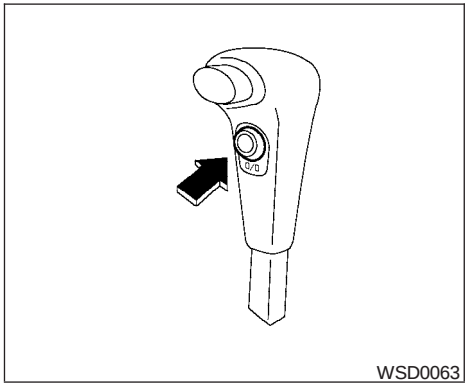

Overdrive switch (VG33E or VG33ER engine)

Each time your vehicle is started, the transmission is automatically “reset” to overdrive ON.

ON: With the engine running and the shift selector lever in the D (Drive) position, the transmission upshifts into Overdrive as vehicle speed increases.

Overdrive does not engage until the engine has reached operating temperature.

OFF: For driving up and down long slopes where engine braking is necessary push the Overdrive switch once. The O/D OFF indicator light in the instrument panel comes on at this time.

When cruising at a low speed or climbing a gentle slope, you may feel uncomfortable shift shocks as the transmission shifts into and out of Overdrive repeatedly. In this case, depress the Overdrive switch to turn the Overdrive off. The O/D OFF indicator light in the instrument panel comes on at this time.

When driving conditions change, depress the Overdrive switch to turn the Overdrive on.

Remember not to drive at high speeds for extended periods of time with the Overdrive off. This reduces fuel economy.

MANUAL TRANSMISSION

⚠ WARNING

- **Do not downshift abruptly on slippery roads. This may cause a loss of control.**
- **Do not over-rev the engine when shifting to a lower gear. This may cause a loss of control or engine damage.**

⚠ CAUTION

- **Do not rest your foot on the clutch pedal while driving. This may cause clutch damage.**
- **Fully depress the clutch pedal before shifting to help prevent transmission damage.**
- **Stop your vehicle completely before shifting into R (Reverse).**
- **When the vehicle is stopped with the engine running (for example, at a stop light), shift to N (Neutral) and release the clutch pedal with the foot brake applied.**

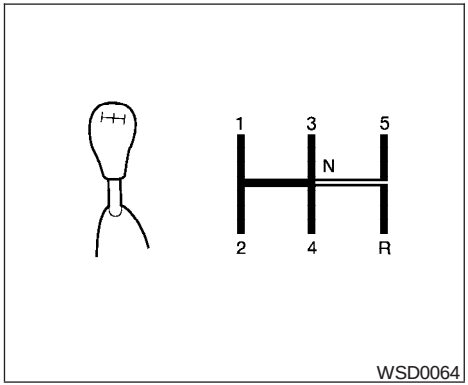

Shifting

To change gears, or when upshifting or downshifting, depress the clutch pedal fully, shift into the appropriate gear, then release the clutch slowly and smoothly.

To ensure smooth gear changes, fully depress the clutch pedal before operating the shift lever. If the clutch pedal is not fully depressed before the transmission is shifted, a gear noise may be heard. Transmission damage could occur.

Start the vehicle in 1st gear and shift to 2nd, 3rd and 4th up to 5th gear in sequence according to vehicle speed.

You cannot shift directly from 5th gear into R (Reverse). First shift into N (Neutral), then into R (Reverse).

If it is difficult to move the shift lever into R (Reverse) or 1 (First), shift into N (Neutral), then release the clutch pedal. Depress the clutch pedal again and shift into R (Reverse) or 1 (First).

If your vehicle is equipped with 4-wheel drive, see " Transfer case shifting procedures" later in this section.

Suggested upshift speeds

The following are suggested vehicle speeds for shifting into a higher gear. These suggestions relate to fuel economy and vehicle performance. Actual upshift speeds will vary according to road conditions, the weather and individual driving habits.

- Two-wheel drive models and four-wheel drive models (2H and 4H position):

GEAR CHANGE	MPH (km/h)
1st to 2nd	15 (24)
2nd to 3rd	25 (40)
3rd to 4th	40 (64)
4th to 5th	45 (72)

- 4–wheel drive model (4L position):

GEAR CHANGE	MPH (km/h)
1st to 2nd	8 (13)
2nd to 3rd	12 (19)
3rd to 4th	20 (32)
4th to 5th	22 (35)

Suggested maximum speed in each gear

Downshift to a lower gear if the engine is not running smoothly, or if you need to accelerate.

Do not exceed the maximum suggested speed (shown below) in any gear. For level road driving, use the highest gear suggested for that speed. Always observe posted speed limits, and drive according to the road conditions, which will ensure safe operation. Do not over-rev the engine when shifting to a lower gear as it may cause engine damage or loss of vehicle control.

Allowable maximum speed in each gear:

2–wheel drive models

GEAR	MPH (km/h)
1st	30 (49)
2nd	55 (89)
3rd	80 (129)
4th	—
5th	—

4–wheel drive models

2H/4H position

GEAR	MPH (km/h)
1st	25 (40)
2nd	43 (69)
3rd	68 (109)
4th	—
5th	—

4L position

GEAR	MPH (km/h)
1st	12 (19)
2nd	22 (35)
3rd	30 (48)
4th	—
5th	—

⚠ WARNING

- **Be sure the parking brake is fully released before driving. Failure to do so can cause brake failure and lead to an accident.**
- **Do not release the parking brake from outside the vehicle.**
- **Do not use the gear shift in place of the parking brake. When parking, be sure the parking brake is fully engaged.**
- **Do not leave children unattended in a vehicle. They could release the parking brake and cause an accident.**

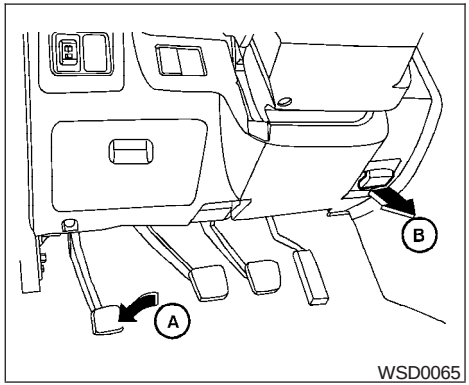

To engage: Firmly depress the parking brake Ⓐ.

To release:

1. Firmly apply the foot brake.
2. **Manual transmission models:**
   Place the shift lever in the N (Neutral) position.

   Automatic transmission models:
   Move the shift selector lever to the P (Park) position.
3. Pull out the parking brake release lever Ⓑ.
4. Before driving, be sure the brake warning light goes out.

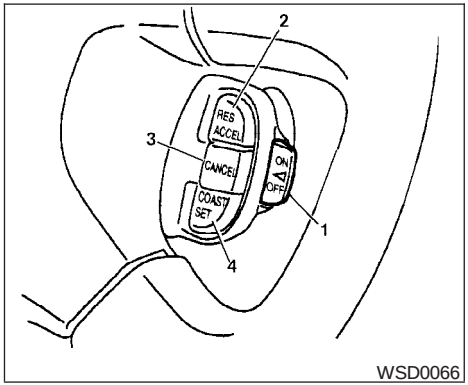

1. Cruise control main switch
2. RES/ACCEL switch
3. CANCEL switch
4. COAST/SET switch

PRECAUTIONS ON CRUISE CONTROL

- If the cruise control system malfunctions, it cancels automatically. The SET indicator light in the instrument panel then blinks to warn the driver.
- If the SET indicator light blinks, turn the cruise control main switch off and have the system checked by a NISSAN dealer.
- The SET indicator light may blink when the cruise control main switch is turned ON while pushing the RES/ACCEL, COAST/SET, or CANCEL switch (located on the steering wheel). To properly set the cruise control system, use the following procedures.

⚠ WARNING

Do not use the cruise control when driving under the following conditions:

- **When it is not possible to keep the vehicle at a set speed.**
- **In heavy traffic or in traffic that varies in speed.**
- **On winding or hilly roads.**
- **On slippery roads (rain, snow, ice, etc.).**
- **In very windy areas.**

Doing so could cause a loss of vehicle control and result in an accident.

⚠ CAUTION

On manual transmission models, do not shift into N (Neutral) without depressing the clutch pedal when the cruise control is set. Should this occur, depress the clutch pedal and turn the main switch off immediately. Failure to do so may cause engine damage.

CRUISE CONTROL OPERATIONS

The cruise control allows driving at a speed between 25 - 89 MPH (40 - 144 km/h) without keeping your foot on the accelerator pedal.

To turn on the cruise control, push the main switch. The CRUISE indicator light in the instrument panel comes on.

To set cruising speed, accelerate the vehicle to the desired speed, push the COAST/SET switch and release it. The SET indicator light in the instrument panel comes on. Take your foot off the accelerator pedal. Your vehicle maintains the set speed.

- **To pass another vehicle,** depress the accelerator pedal. When you release the pedal, the vehicle returns to the previously set speed.

- The vehicle may not maintain the set speed when going up or down steep hills. If this happens, drive without the cruise control.

To cancel the preset speed, use one of the following three methods.

- Push the CANCEL button; the SET indicator light in the instrument panel goes out.
- Tap the brake pedal; the SET indicator light goes out.
- Turn the main switch off. Both the CRUISE indicator light and SET indicator light in the instrument panel go out.

The cruise control is automatically canceled and the SET light in the instrument panel goes out if:

- you depress the brake or clutch pedal while pushing the RES/ACCEL or COAST/SET switch. The preset speed is deleted from memory.
- the vehicle slows down more than 8 MPH (13 km/h) below the set speed.
- you depress the clutch pedal (manual transmission), or move the shift selector lever to N (Neutral) (automatic transmission).

To reset at a faster cruising speed, use one of the following three methods.

- Depress the accelerator pedal. When the vehicle attains the desired speed, push and release the COAST/SET switch.
- Push and hold the RES/ACCEL switch. When the vehicle attains the speed you desire, release the switch.
- Push and release the RES/ACCEL switch. Each time you do this, the set speed increases by about 1 MPH (1.6 km/h).

To reset at a slower cruising speed, use one of the following three methods.

- Lightly tap the brake pedal. When the vehicle attains the desired speed, push the COAST/SET switch and release it.
- Push and hold the COAST/SET switch. Release the switch when the vehicle slows to the desired speed.
- Push and release the COAST/SET switch. Each time you do this, the set speed decreases by about 1 MPH (1.6 km/h).

To resume the preset speed, push and release the RES/ACCEL switch. The vehicle returns to the last set cruising speed when the vehicle speed is over 25 MPH (40 km/h).

⚠ CAUTION

During the first 1,200 miles (2,000 km), follow these recommendations to obtain maximum engine performance and ensure the future reliability and economy of your new vehicle. Failure to follow these recommendations may result in shortened engine life and reduced engine performance.

- Avoid driving for long periods at constant speed, either fast or slow, and do not run the engine over 4,000 rpm.
- Do not accelerate at full throttle in any gear.
- Avoid quick starts.
- Avoid hard braking as much as possible.
- Do not tow a trailer for the first 500 miles (800 km). Your engine, axle or other parts could be damaged.

INCREASING FUEL ECONOMY

- Accelerate slowly and smoothly. Maintain cruising speeds with a constant accelerator position.
- Drive at moderate speeds on the highway. Driving at high speed lowers fuel economy.
- Avoid unnecessary stopping and braking. Maintain a safe distance behind other vehicles.
- Use a proper gear range which suits road conditions. On level roads, shift into high gear as soon as possible.
- Avoid unnecessary engine idling.
- Keep your engine tuned up.
- Follow the recommended periodic maintenance schedule.
- Keep the tires inflated to the correct pressure. Low tire pressure increases tire wear and lowers fuel economy.
- Keep the front wheels in correct alignment. Improper alignment increases tire wear and lowers fuel economy.
- Air conditioner operation lowers fuel economy. Use the air conditioner only when necessary.
- When cruising at highway speeds, it is more economical to use the air conditioner and leave the windows closed to reduce drag.
- 4x4 Use 4H or 4L position only when necessary. Four-wheel drive operation lowers fuel economy.

4x4 USING FOUR WHEEL DRIVE (4WD)

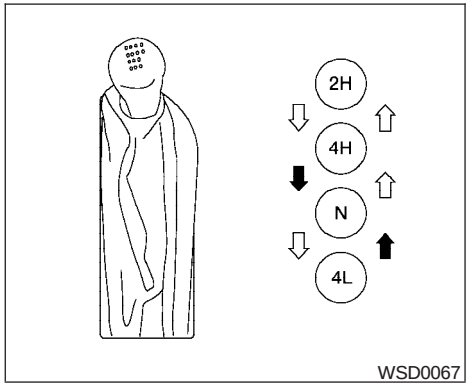

To move the transfer case lever:

⬆ : Push down on the lever to shift

⇧ : Shift without pushing down on the lever

TRANSFER CASE SHIFTING PROCEDURES

⚠WARNING

- **When parking always make sure the transfer control lever is in the 2H, 4H or 4L position and the parking brake is applied.**

- **Do not leave the transfer control lever in the N (Neutral) position. Otherwise, the vehicle could roll unexpectedly even if the manual transmission is in any gear or the automatic transmission is in the P (Park) position. This could result in serious personal injury or property damage.**
- **Failure to engage the transfer control lever in 2H, 4H or 4L could result in the vehicle moving unexpectedly, which could cause serious personal injury or property damage.**

⚠ CAUTION

Do not drive on dry hard surface roads in four-wheel drive. Driving on dry hard surfaces in 4H or 4L may cause unnecessary noise, tire wear, and increased fuel consumption. NISSAN recommends driving in the 2H position under these conditions.

2H — (2WD, high range) Only the rear wheels are driven. Use for driving under the same conditions as standard 2WD vehicles or state dynamometer I/M testing.

4H — (4WD, high range) Four wheels are driven. Use when driving on roads where it is difficult to drive in the 2H position (for example, driving at normal speeds on snow covered, icy, wet, muddy or sandy roads).

The 4H position provides greater power and traction. Avoid excessive speed as it will cause increased fuel consumption, higher oil temperature and could damage drivetrain components. Speed over 50 MPH (80 km/h) in 4H are not recommended.

4L — (4WD, low range) Four wheels are driven. Use when climbing or descending steep hills, or during driving in sand, mud or deep snow. The 4L position provides maximum power and traction. Avoid raising vehicle speed excessively, as the recommended maximum speed is approximately 30 MPH (48 km/h).

N — No wheels are driven. Always keep the transfer lever out of the N (Neutral) position. Shift the lever quickly and smoothly when moving across the N (Neutral) position with the vehicle stopped.

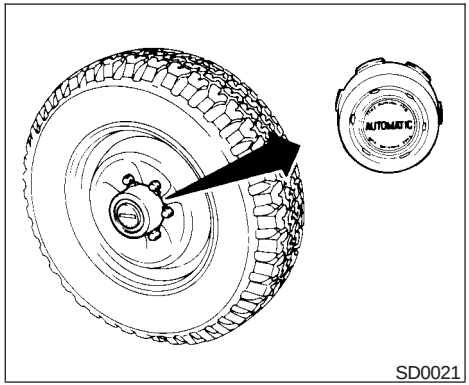

4x4 AUTO-LOCK FREE-RUNNING HUBS

The auto-lock free-running hub is designed to allow for automatic four-wheel drive engagement when the shift lever is moved to the 4H or 4L position. Follow these operational cautions:

⚠ CAUTION

- **The auto-locking hubs will make a clicking noise when engaging and disengaging. This is normal.**

- **Accelerating quickly from a stop after shifting from two-wheel drive to four-wheel drive may not allow engagement of the auto-locking free-running hubs and may cause a clattering noise. If this occurs, release the accelerator pedal to reduce the engine speed or stop the vehicle. Continued use of the vehicle with this noise may damage the hub lock.**
- **If the auto-locking hubs make a clattering noise after shifting from four-wheel drive to two-wheel drive, stop and move the vehicle in reverse gear, in a straight line, about 7 to 10 feet (2 to 3 m).**

- **Under extremely cold conditions [below 5°F (-15°C)], the front axle shafts may rotate even with the transfer lever in the 2H position. If this occurs, the auto-locking hubs may make a clattering noise. To avoid this, drive first in four-wheel drive to warm up the vehicle and differential gear oil. Then, shift to two-wheel drive.**
- **In cold weather, it may be necessary to reduce speed or stop the vehicle in order to shift from two-wheel drive to four-wheel drive.**
- **When shifting into or out of four-wheel drive while driving, do not stop shift lever movement midway. An incomplete shift may cause a clattering noise from the auto-locking hubs. Continued use of the vehicle with this noise may damage the hub lock. Drive in four-wheel drive to stop the noise. Shift to two-wheel drive as described.**

For Automatic transmission models:

When moving the transfer lever from 4H or 4L to 4L or 4H, you must always move it quickly through the N position. If you are slow to shift, the engine idle speed will allow the transfer gears to speed up and gear clashing will occur.

Do not move the transfer lever from 4H or 4L to 4L or 4H, from 2H to 4L and from 4L to 2H with the engine turned off. Otherwise, you may have difficulty in moving the transfer lever to the desired position.

Do not leave the transfer lever in the N position with the engine running. Stopping with the transfer case in the N position may cause gear grinding when selecting another gear. Changing the transfer case gear quickly and smoothly will eliminate this.

TO SHIFT TRANSFER CASE	SHIFT PROCEDURE FOR AUTO-LOCK FREE RUNNING HUBS
From 2H to 4H	Move the transfer case shift lever to 4H at speeds below 25 MPH (40 km/h). It is not necessary to depress the clutch pedal. Perform this operation when driving straight, not while cornering.
From 4H to 2H	1. Move the transfer case shift lever to 2H. This can be done at any speed, and it is not necessary to depress the clutch pedal. Perform this operation when driving straight, not while cornering. 2. Disengage the AUTO-LOCK hubs following the procedure outlined below. **NOTE: The 4WD indicator light may not turn off immediately under certain driving conditions, such as when the vehicle is driven uphill. This is normal and it will shut off as the vehicle is driven further.** AUTO-LOCK HUB DISENGAGEMENT (FREE MODE) The AUTO-LOCK hubs will not disengage until the vehicle is completely stopped and is then moved in a straight line, approximately 7-10 ft (2-3 m), in the opposite direction of travel. For example: If you were driving the vehicle forward, stop and move the vehicle 7-10 ft (2-3 m) backward. If you were driving the vehicle in reverse, stop and move the vehicle 7-10 ft (2-3 m) forward. It is not necessary to immediately return the AUTO-LOCK hubs to FREE MODE when shifting from 4H to 2H. The vehicle may be operated under normal 2H conditions with the AUTO-LOCK hubs engaged. However, disengaging the AUTO-LOCK hubs will allow for better fuel economy, quieter ride and less component wear. Leaving the hubs locked while driving in 2H may be desirable so that you can easily shift to 4H at speeds greater than 25 MPH (40 km/h).
From 4H to 4L or 4L to 4H	1. Stop the vehicle. Keep the engine running. 2. Depress the clutch pedal, or place the transmission selector lever in the N (Neutral) position. 3. Depress the transfer case shift lever and move it to the 4L or 4H position. Change gears quickly and smoothly.
From 2H to 4L	1. Stop the vehicle. Keep the engine running. 2. Depress the clutch pedal, or place the transmission selector lever in the N (Neutral) position. 3. Depress the transfer case shift lever and move it to the 4L position. Change gears quickly and smoothly.
From 4L to 2H	1. Stop the vehicle. Keep the engine running. 2. Depress the clutch pedal, or place the transmission selector lever in the N (Neutral) position. 3. Depress the transfer case shift lever and move it to the 2H position. Change gears quickly and smoothly. 4. Disengage the AUTO-LOCK hubs following the procedure outlined above.

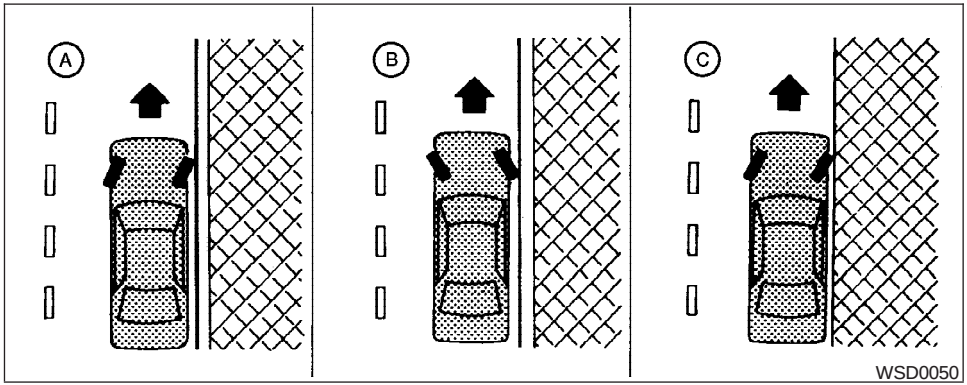

WARNING

- **Do not stop or park the vehicle over flammable materials such as dry grass, waste paper or rags. They may ignite and cause a fire.**
- **4x4 The transfer control lever must be in the 2H, 4H or 4L position and the parking brake set to prevent the vehicle from rolling.**

- **Never place the transfer control lever in the N (Neutral) position. Otherwise, the vehicle could roll unexpectedly even if the manual transmission is in gear or the automatic transmission is in the P (Park) position. This could result in serious injury or property damage.**

- **Safe parking procedures require that both the parking brake be set and the transmission placed into P (Park) for automatic transmission models or in an appropriate gear for manual transmission models. Failure to do so could cause the vehicle to move unexpectedly or roll away and result in an accident. Make sure the shift lever has been pushed as far forward as it can go and cannot be moved without depressing the foot brake pedal.**
- **Never leave the engine running while the vehicle is unattended.**
- **Do not leave children unattended inside the vehicle. They could unknowingly activate switches or controls. Unattended children could become involved in serious accidents.**
- **If the ATP lamp is ON, this indicates that the automatic transmission P (Park) position will not function and the transfer control shift lever is in the N (Neutral) position. Failure to engage the transfer control lever in the 2H, 4H or 4L position could result in the vehicle moving unexpectedly, resulting in serious personal injury or property damage.**

1. Firmly apply the parking brake.
2. **Manual transmission models:**

   Place the shift lever in the R (Reverse) position. When parking on an uphill grade, place the shift lever in 1st gear.

   Automatic transmission models:

   Move the shift selector lever to the P (Park) position.
3. To help prevent the vehicle from rolling into traffic when parked on an incline, it is a good practice to turn the wheels as illustrated.

- HEADED DOWNHILL WITH CURB: ①

  Turn the wheels into the curb and move the vehicle forward until the curb side wheel gently touches the curb.

- HEADED UPHILL WITH CURB: ②

  Turn the wheels away from the curb and move the vehicle back until the curb side wheel gently touches the curb.

- HEADED UPHILL OR DOWNHILL, NO CURB: ③

  Turn the wheels toward the side of the road so the vehicle will move away from the center of the road if it moves.

4. Turn the ignition key to the LOCK position and remove the key.

POWER STEERING

The power assisted steering uses a hydraulic pump, driven by the engine, to assist steering.

If the engine stops or the drive belt breaks, you will still have control of the vehicle. However, much greater steering effort is needed, especially in sharp turns and at low speeds.

⚠ WARNING

If the engine is not running or is turned off while driving, the power assist for the steering will not work. Steering will be much harder to operate.

The brake system has two separate hydraulic circuits. If one circuit malfunctions, you will still have braking at two wheels.

BRAKE PRECAUTIONS

Vacuum assisted brakes

The brake booster aids braking by using engine vacuum. If the engine stops, you can stop the vehicle by depressing the brake pedal. However, greater foot pressure on the brake pedal will be required to stop the vehicle and stopping distance will be longer.

Using the brakes

Avoid resting your foot on the brake pedal while driving. This will overheat the brakes, wear out the brakes and pads faster, and reduce gas mileage.

To help reduce brake wear and to prevent the brakes from overheating, reduce speed and downshift to a lower gear before going down a slope or long grade. Overheated brakes may reduce braking performance and could result in loss of vehicle control.

⚠ WARNING

- **While driving on a slippery surface, be careful when braking, accelerating or downshifting. Abrupt braking or accelerating could cause the wheels to skid and result in an accident.**
- **If the engine is not running or is turned off while driving, the power assist for the brakes will not work. Braking will be harder.**

Wet brakes

When the vehicle is washed or driven through water, the brakes may get wet. As a result, your braking distance will be longer and the vehicle may pull to one side during braking.

To dry the brakes, drive the vehicle at a safe speed while lightly pressing the brake pedal to heat up the brakes. Do this until the brakes return to normal. Avoid driving the vehicle at high speeds until the brakes function correctly.

ANTI-LOCK BRAKE SYSTEM (ABS)

The anti-lock brake system controls the brakes so the wheels do not lock when braking abruptly or when braking on slippery surfaces. The system detects the rotation speed at each wheel and varies the brake fluid pressure to prevent each wheel from locking and sliding. By preventing wheel lockup, the system helps the driver maintain steering control and helps to minimize swerving and spinning on slippery surfaces.

Using the system (4-wheel ABS)

Depress the brake pedal and hold it down.

⚠ WARNING

Do not pump the brake pedal. Doing so may result in increased stopping distances.

Normal operation

The anti-lock brake system does not operate at speeds below 3 - 6 MPH (5 - 10 km/h). (The speeds vary according to road conditions.)

When driving, the anti-lock brake system controls the wheels so they will not lock when braking abruptly or when braking on a slippery road. Thus, difficult steering and swerving of the vehicle due to locked wheels is minimized. The system detects the wheel rotation rate and electronically controls the pressure applied to each brake. Slight vibration on the brake pedal accompanied by noise usually occurs while the ABS system is operating. Such vibration and noise encountered during abrupt braking is not a problem, but indicates that the system is functioning

properly. However, the pulsation may indicate that road conditions are hazardous and extra care is required while driving.

Self-test feature

The anti-lock brake system consists of electronic sensors and hydraulic solenoids controlled by a computer. The computer has a built-in diagnostic feature that tests the system each time you start the engine and move the vehicle at a low speed in forward or reverse. When the self-test occurs, you may hear a ''clunk'' noise and/or feel a pulsation in the brake pedal. This is normal and is not an indication of any malfunction. If the computer senses any malfunction, it switches the anti-lock brake system off and turns on the ABS brake warning light on the instrument panel. The brake system then operates normally, but without anti-lock assistance.

If a malfunction occurs in the system, the anti-lock function will not operate, but the standard vehicle brake system will continue to operate normally. The ABS brake warning light will then come on.

If the light comes on during the self-test or while driving, take the vehicle to a NISSAN dealer for repair.

⚠ WARNING

- **The anti-lock brake system is a sophisticated device, but it cannot prevent accidents resulting from careless or dangerous driving techniques. It can help maintain vehicle control during braking on slippery surfaces, but remember that the stopping distance on slippery surfaces will be longer than on normal surfaces even with the anti-lock brake system. Stopping distances may also be longer on rough, gravel or snow covered roads, or if you are using tire chains. Tire type and condition may also affect braking effectiveness. Always maintain a safe distance from the vehicle in front of you. Ultimately, the responsibility for safety of self and others rests in the hands of the driver.**
- **Tire type and condition of tires may also affect braking effectiveness.**
- **When replacing tires, install the specified size of tires on all four wheels.**
- **When installing a spare tire, make sure it is the proper size and type as specified on the tire placard. For tire placard location information, refer to "Tire placard" in the "Technical and consumer information" section of this manual.**
- **Refer to "Wheels and tires" in the "Maintenance and do-it-yourself" section of this manual.**

VEHICLE DYNAMIC CONTROL (VDC) SYSTEM (if so equipped)

When accelerating or driving on slippery surfaces, the tires may spin or slide. With the Vehicle Dynamic Control (VDC) system, sensors detect these movements and control the braking and engine output to help improve vehicle stability.

- When the vehicle dynamic control (VDC) system is operating, the slip indicator in the instrument panel blinks.
- When only the traction control system (TCS) portion of the vehicle dynamic control system is operating, the slip indicator will also blink.
- If the slip indicator blinks, the road conditions are slippery. Be sure to adjust your speed and driving to these conditions. See “Slip indicator light”, and “Vehicle dynamic control off indicator light” in the “Instruments and controls” section.
- Indicator light
  If malfunction occurs in the system, the **SLIP** and VDC OFF indicator lights come on in the instrument panel.
  As long as these warning lights are on, the traction control function is canceled.

The VDC system uses an Active Brake Limited Slip (ABLS) system to improve vehicle traction. The ABLS system works when one of the driving wheels is spinning on a slippery surface. The ABLS system brakes the spinning wheel which distributes the driving power to the other drive wheel. If the vehicle is operated with the vehicle dynamic control system off using the VDC OFF switch, all VDC and ABLS functions will be turned off. The ABS will still operate with the VDC system off. If the ABLS system is activated, the slip indicator light will blink and you may hear a clunk noise and/or feel a pulsation in the brake pedal. This is normal.

While the VDC system is operating, you may feel a pulsation in the brake pedal and hear a noise or vibration from under the hood. This is normal and indicates that the VDC system is working properly.

The computer has a built in diagnostic feature that tests the system each time you start the engine and move the vehicle forward or in reverse at a slow speed. When the self-test occurs, you may hear a clunk noise and/or feel a pulsation in the brake pedal. This is normal and is not an indication of a malfunction.

⚠ WARNING

- **The vehicle dynamic control system is designed to help improve driving stability but does not prevent accidents due to abrupt steering operation at high speeds or by careless or dangerous driving techniques. Reduce vehicle speed and be especially careful when driving and cornering on slippery surfaces and always drive carefully.**
- **If brake related parts such as brake pads, rotors and calipers are not standard equipment or are extremely deteriorated, the vehicle dynamic control system may not operate properly and the vehicle dynamic control off indicator light may come on.**
- **Do not modify the vehicle’s suspension. If suspension parts such as shock absorbers, struts, springs, stabilizer bars and bushings are not NISSAN approved for your vehicle or are extremely deteriorated the vehicle dynamic control system may not operate properly. This could adversely affect vehicle handling performance, and the vehicle dynamic control off indicator light may come on.**

- **When driving on extremely inclined surfaces such as higher banked corners, the vehicle dynamic control system may not operate properly and the vehicle dynamic control off indicator light may come on. Do not drive on these types of roads.**
- **When driving on unstable surfaces such as a turntable, ferry, elevator or ramp, the vehicle dynamic control off indicator light may illuminate. This is not a malfunction. Restart the engine after driving onto a stable surface**
- **If wheels or tires other than the recommended ones are used, the vehicle dynamic control system may not operate properly and the vehicle dynamic control off indicator light may come on.**
- **The vehicle dynamic control system is not a substitute for winter tires or tire chains on a snow covered road.**

FREEING A FROZEN DOOR LOCK

To prevent a door lock from freezing, apply deicer through the key hole. If the lock becomes frozen, heat the key before inserting it into the key hole.

ANTI-FREEZE

In the winter when it is anticipated that the temperature will drop below 32°F (0°C), check the anti-freeze to assure proper winter protection. For details, see ‘‘Engine cooling system’’ in the ‘‘Maintenance and do-it-yourself’’ section of this manual.

BATTERY

If the battery is not fully charged during extremely cold weather conditions, the battery fluid may freeze and damage the battery. To maintain maximum efficiency, the battery should be checked regularly. For details, see ‘‘Battery’’ in the ‘‘Maintenance and do-it-yourself’’ section of this manual.

DRAINING OF COOLANT WATER

If the vehicle is to be left outside without anti-freeze, drain the cooling system, including the engine block. Refill before operating the vehicle. For details, see ‘‘Changing engine coolant’’ in the ‘‘Maintenance and do-it-yourself’’ section of this manual.

TIRE EQUIPMENT

1. SUMMER tires have a tread designed to provide superior performance on dry pavement. However, the performance of these tires will be substantially reduced in snowy and icy conditions. If you operate your vehicle on snowy or icy roads, NISSAN recommends the use of MUD & SNOW or ALL SEASON TIRES on all four wheels. Please consult a NISSAN dealer for the tire type, size, speed rating and availability information.
2. For additional traction on icy roads, studded tires may be used. However, some U.S. states and Canadian provinces prohibit their use. Check local, state and provincial laws before installing studded tires.

Skid and traction capabilities of studded snow tires on wet or dry surfaces may be poorer than that of non-studded snow tires.

3. Tire chains may be used.

   Use of tire chains may be prohibited according to location. Check the local laws before installing tire chains. When installing tire chains, make sure they are of proper size for

the tires on your vehicle and are installed according to the chain manufacturer's suggestions. **Use only SAE Class "S" chains.** Class "S" chains are used on vehicles with restricted tire to vehicle clearance. Vehicles that can use Class "S" chains are designed to meet the minimum clearances between the tire and the closest vehicle suspension or body component required to accommodate the use of a winter traction device (tire chains or cables). The minimum clearances are determined using the factory equipped tire size. Other types may damage your vehicle. Use chain tensioners when recommended by the tire chain manufacturer to ensure a tight fit. Loose end links of the tire chain must be secured or removed to prevent the possibility of whipping action damage to the fenders or underbody. If possible, avoid fully loading your vehicle when using tire chains. In addition, drive at a reduced speed. Otherwise, your vehicle may be damaged and/or vehicle handling and performance may be adversely affected.

Never install tire chains on spare tires. Do not use tire chains on dry roads.

SPECIAL WINTER EQUIPMENT

It is recommended that the following items be carried in the vehicle during winter:

- A scraper and stiff-bristled brush to remove ice and snow from the windows and wiper blades.
- A sturdy, flat board to be placed under the jack to give it firm support.
- A shovel to dig the vehicle out of snowdrifts.
- Extra window washer fluid to refill the reservoir tank.

DRIVING ON SNOW OR ICE

⚠ WARNING

- **Wet ice (32°F, 0°C and freezing rain), very cold snow or ice can be slick and very hard to drive on. The vehicle will have much less traction or "grip" under these conditions. Try to avoid driving on wet ice until the road is salted or sanded.**
- **Whatever the condition, drive with caution. Accelerate and slow down with care. If accelerating or downshifting too fast, the drive wheels will lose even more traction.**
- **Allow more stopping distance under these conditions. Braking should be started sooner than on dry pavement.**
- **Allow greater following distances on slippery roads.**
- **Watch for slippery spots (glare ice). These may appear on an otherwise clear road in shaded areas. If a patch of ice is seen ahead, brake before reaching it. Try not to brake while on the ice, and avoid any sudden steering maneuvers.**
- **Do not use the cruise control on slippery roads.**
- **Snow can trap dangerous exhaust gases under your vehicle. Keep snow clear of the exhaust pipe and from around your vehicle.**

ENGINE BLOCK HEATER (if so equipped)

An engine block heater to assist in extreme cold temperature starting is available through a NISSAN dealer.

⚠ WARNING

Do not use your heater with an ungrounded electrical system or two-pronged (cheater) adapters. You can be injured by an electrical shock if you use an ungrounded connection.

6 In case of emergency

First aid kit (if so equipped) 6-2
Flat tire 6-2
Low tire pressure warning system (if so equipped) 6-2
Changing a flat tire 6-3
Jump starting 6-9
Push starting 6-11
If your vehicle overheats 6-11
Towing your vehicle 6-12
Towing recommended by NISSAN 6-13
Vehicle recovery (freeing a stuck vehicle) 6-15

FIRST AID KIT (if so equipped)

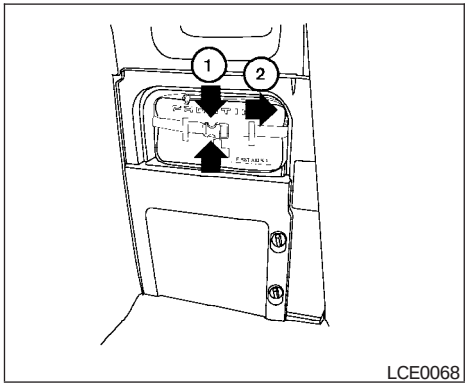

A first aid kit is located behind the driver seat. To remove the first aid kit:

① Squeeze the latch buttons.

② Pull the two straps apart to unfasten.

FLAT TIRE

LOW TIRE PRESSURE WARNING SYSTEM (if so equipped)

This vehicle is equipped with the low tire pressure warning system. It monitors tire pressure of all tires except the spare. When the low tire pressure warning light is lit, one or more of your tires is significantly under-inflated. If the vehicle is being driven with a flat tire or low tire pressure (lower than 28 psi, 193 kPa), the low tire pressure warning system will activate and warn you of it by the low tire pressure warning light. This system will activate only when the vehicle is driven at speeds above 20 MPH (32 km/h). For more details, please refer to “Warning/indicator lights and audible reminders” in the “Instruments and controls” section, and “Low tire pressure warning system” in the “Starting and driving” section.

⚠ WARNING

- **If the low tire pressure warning light flashes while driving, avoid sudden steering maneuvers or abrupt braking, reduce vehicle speed, pull off the road to a safe location and stop the vehicle as soon as possible. Serious vehicle damage could occur and may lead to an accident and could result in serious personal injury. Check the tire pressure for all four tires. Adjust the tire pressure to the recommended COLD tire pressure shown on the tire placard to turn the low tire pressure warning light OFF. If you have a flat tire, replace it with a spare tire as soon as possible.**
- **When a spare tire is mounted or a wheel is replaced, tire pressure will not be indicated and the low tire pressure warning system will not function. Contact your NISSAN dealer as soon as possible for tire replacement and/or system resetting.**
- **Do not inject any tire liquid or aerosol tire sealant into the tires, as this may cause a malfunction of the tire pressure sensors.**

CHANGING A FLAT TIRE

If you have a flat tire, follow the instructions below.

Stopping the vehicle

1. Safely move the vehicle off the road and away from traffic.
2. Turn on the hazard warning flashers.
3. Park on a level surface and apply the parking brake. Shift the manual transmission into R (Reverse), or the automatic transmission into P (Park).

⚠WARNING

- **4x4 The transfer control lever must be in the 2H, 4H or 4L position.**
- **Do not leave the transfer control lever in the N (Neutral) position. Otherwise, the vehicle could roll unexpectedly even if the manual transmission is in any gear or the automatic transmission is in the P (Park) position. This could result in serious personal injury or property damage.**

4. Turn off the engine.
5. Raise the hood to warn other traffic and to signal professional road assistance personnel that you need assistance.
6. Have all passengers get out of the vehicle and stand in a safe place, away from traffic and clear of the vehicle.

⚠WARNING

- **Make sure the parking brake is securely applied and the manual transmission is shifted into R (Reverse), or the automatic transmission into P (Park).**
- **Never change tires when the vehicle is on a slope, ice or slippery areas. This is hazardous.**
- **Never change tires if oncoming traffic is close to your vehicle. Wait for professional road assistance.**
- **When a spare tire is mounted or a wheel is replaced, the low tire pressure warning system will not function. Contact your NISSAN dealer as soon possible for tire replacement and/or system resetting. (For models with the low tire pressure warning system)**

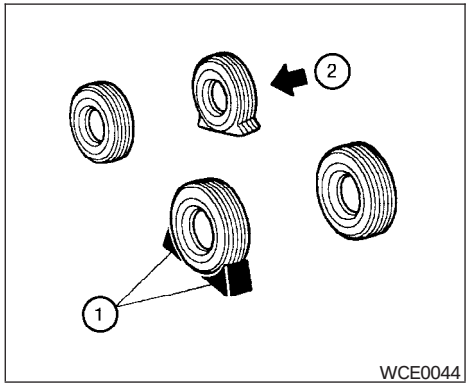

Blocking wheels

Place suitable blocks ① at both the front and back of the wheel diagonally opposite the flat tire ② to prevent the vehicle from rolling when it is jacked up.

⚠WARNING

Be sure to block the wheel as the vehicle may move and result in personal injury.

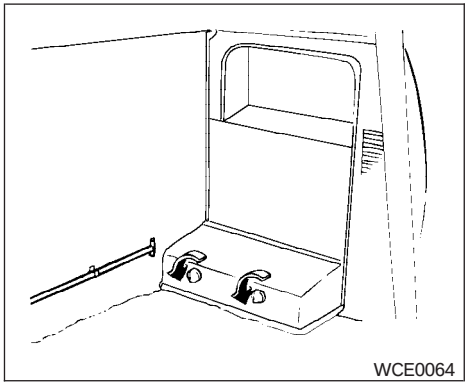

Type A

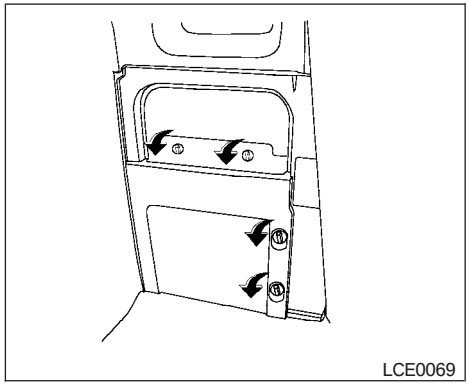

Type B

Getting the spare tire and tools

For King Cab models:

- Move the driver's seatback fully forward.
- Remove the jack and wheel nut wrench from the tool case located behind the driver's seat.
- Remove the jack rod located behind the driver's seat.

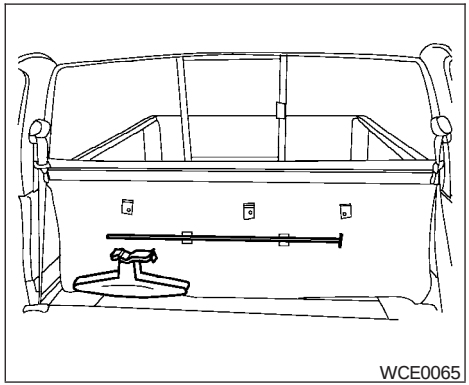

For Crew Cab models:

- Tilt the rear bench seat forward.
- Remove the jack, jack rod, and tool case located behind the rear bench seat.

All models:

1. Fit the square end of the jack rod into the square hole of the wheel nut wrench to form a handle.
2. Find the oval-shaped opening under the middle of the tailgate. Pass the T-shaped end of the jack rod through the opening and direct it toward the spare tire winch, located directly above the spare tire.

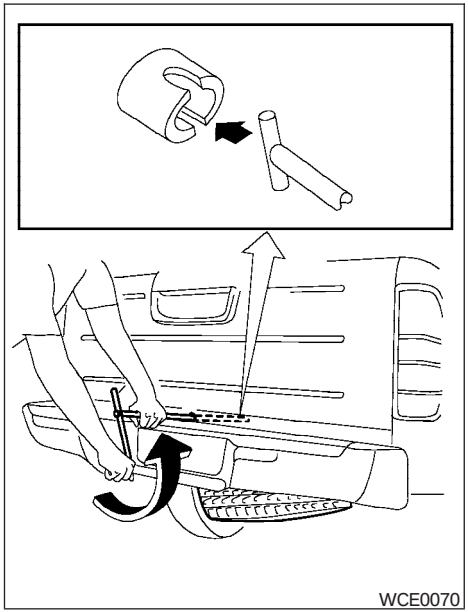

3. Seat the T-shaped end of the jack rod into the T-shaped opening of the spare tire winch. Apply pressure to keep the jack rod engaged in the spare tire winch and turn the jack rod counterclockwise to lower the spare tire.

4. Once the spare tire is completely lowered, reach under the vehicle, remove the retainer chain, and carefully slide the tire from under the rear of the vehicle.

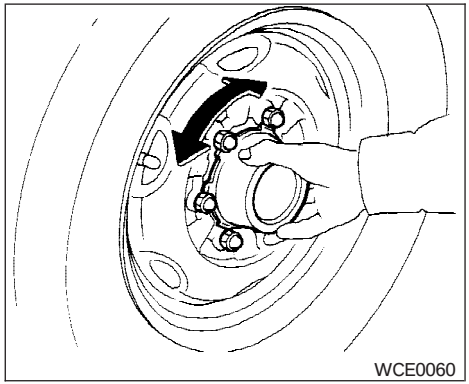

Type A

Removing wheel cover

⚠ CAUTION

Do not use your hands to pry off wheel caps or wheel covers. Doing so could result in personal injury.

Remove the wheel cover as follows:

Use caution not to scratch the wheel cover or wheel surface.

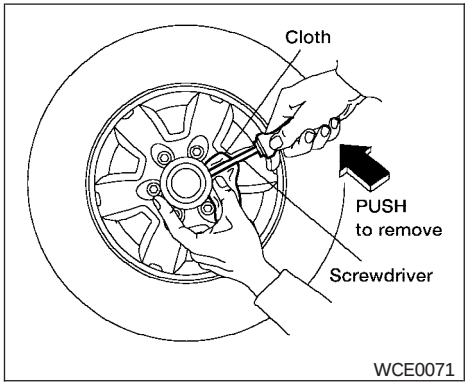

Type B

Type A:

Firmly grasp the center wheel cap and turn either clockwise or counterclockwise to remove.

Type B:

1. Wrap the end of a screwdriver with a cloth.
2. Pry the center wheel cap off by pushing on the handle of the screwdriver in the direction shown.

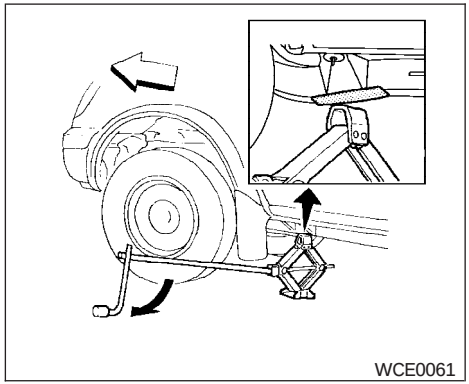

Front

Jacking up vehicle and removing the damaged tire

⚠ WARNING

- **Never get under the vehicle while it is supported only by the jack. If it is necessary to work under the vehicle, support it with safety stands.**
- **Use only the jack provided with your vehicle to lift the vehicle. Do not use the jack provided with your vehicle on other vehicles. The jack is designed for lifting only your vehicle during a tire change.**
- **Use the correct jack-up points. Never use any other part of the vehicle for jack support.**
- **Never jack up the vehicle more than necessary.**
- **Never use blocks on or under the jack.**
- **Do not start or run the engine while vehicle is on the jack. It may cause the vehicle to move. This is especially true for vehicles with limited slip differentials.**
- **Do not allow passengers to stay in the vehicle while it is on the jack.**
- **Never run the engine with a wheel(s) off the ground. It may cause the vehicle to move.**

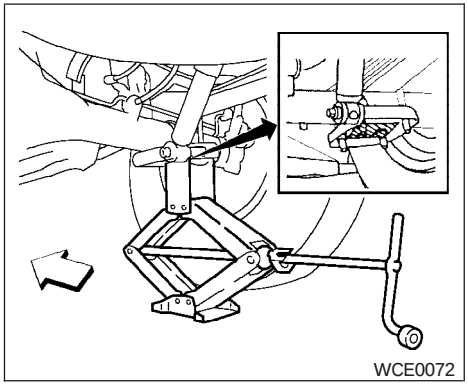

Rear (4–wheel drive models)

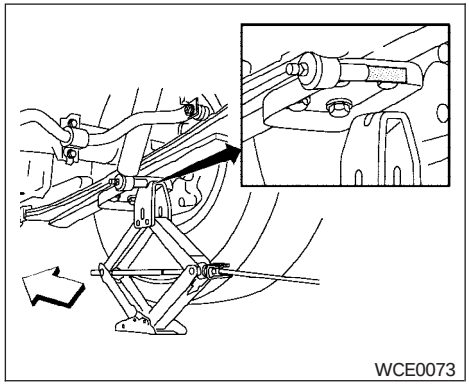

Rear (2–wheel drive models)

Always refer to the proper illustrations for the correct placement and jack-up points for your specific vehicle model and jack type.

Carefully read the caution label attached to the jack body and the following instructions.

1. Loosen each wheel nut one or two turns by turning counterclockwise with the wheel nut wrench. **Do not remove the wheel nuts until the tire is off the ground.**

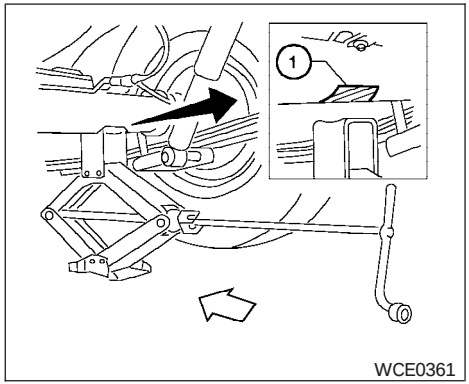

Rear (15 inch wheel alternate jack-up point)

2. Place the jack directly under the jack-up point as illustrated so the top of the jack contacts the vehicle at the jack-up point.

   Under some conditions there will not be sufficient clearance to use the primary rear jacking point on vehicles equipped with 15 inch wheels. If this occurs, use the alternate jack-up point ① for vehicles equipped with 15 inch wheels. When using the alternate jack-up point, position the jack on the axle as close as possible to the tire that needs to be changed.

The jack should be used on firm and level ground.

3. To lift the vehicle, securely hold the jack lever and rod. Carefully raise the vehicle until the tire clears the ground.

   When using alternate rear jack-up point for 15 inch wheels, raise the vehicle so that the tire is no more than 2 inches (50 mm) off the ground.

4. Remove the wheel nuts and then remove the tire.

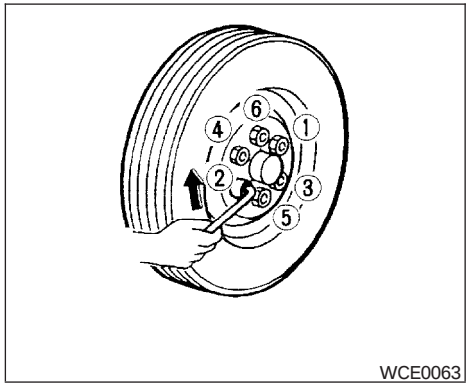

Installing the spare tire

The spare tire is designed for emergency use. See specific instructions under the heading "Wheels and tires" in the "Maintenance and do-it-yourself" section of this manual.

1. Clean any mud or dirt from the surface between the wheel and hub.
2. Carefully put the spare tire on and tighten the wheel nuts finger tight.
3. With the wheel nut wrench, tighten wheel nuts alternately and evenly as illustrated until they are tight.
4. Lower the vehicle slowly until the tire touches the ground. Then, with the wheel nut wrench, tighten the wheel nuts securely in the sequence illustrated. Lower the vehicle completely.

⚠ WARNING

- **Incorrect wheel nuts or improperly tightened wheel nuts can cause the wheel to become loose or come off. This could cause an accident.**
- **Do not use oil or grease on the wheel studs or nuts. This could cause the nuts to become loose.**

Retighten the wheel nuts after the vehicle has been driven for 600 miles (1,000 km) (also in cases of a flat tire, etc.). As soon as possible, tighten the wheel nuts to the specified torque with a torque wrench.

Wheel nut tightening torque:

98 ft-lb (133 N·m)

The wheel nuts must be kept tightened to specification at all times. It is recommended that wheel nuts be tightened to specifications at each lubrication interval.

Adjust tire pressure to the COLD pressure.

COLD pressure: After vehicle has been parked for three hours or more or driven less than 1 mile (1.6 km).

COLD tire pressures are shown on the tire placard affixed to the inside of the glove box lid.

5. Securely store the flat tire and jacking equipment in the vehicle.

⚠ WARNING

- **Always make sure that the spare tire and jacking equipment are properly secured after use. Such items can become dangerous projectiles in an accident or sudden stop.**
- **The spare tire is designed for emergency use. See specific instructions under the heading "Wheels and tires" in the "Maintenance and do-it-yourself" section of this manual.**

⚠ CAUTION

Be sure to center the spare tire suspending plate on the wheel and then lift the spare tire.

To start your engine with a booster battery, the instructions and precautions below must be followed.

⚠ WARNING

- **If done incorrectly, jump starting can lead to a battery explosion, resulting in severe injury or death. It could also damage your vehicle.**
- **Explosive hydrogen gas is always present in the vicinity of the battery. Keep all sparks and flames away from the battery.**
- **Do not allow battery fluid to come into contact with eyes, skin, clothing or painted surfaces. Battery fluid is a corrosive sulfuric acid solution which can cause severe burns. If the fluid should come into contact with anything, immediately flush the contacted area with water.**
- **Keep battery out of the reach of children.**
- **The booster battery must be rated at 12 volts. Use of an improperly rated battery can damage your vehicle.**
- **Whenever working on or near a battery, always wear suitable eye protectors (for example, goggles or industrial safety spectacles) and remove rings, metal bands, or any other jewelry. Do not lean over the battery when jump starting.**
- **Do not attempt to jump start a frozen battery. It could explode and cause serious injury.**
- **Your vehicle has an automatic engine cooling fan. It could come on at any time. Keep hands and other objects away from it.**

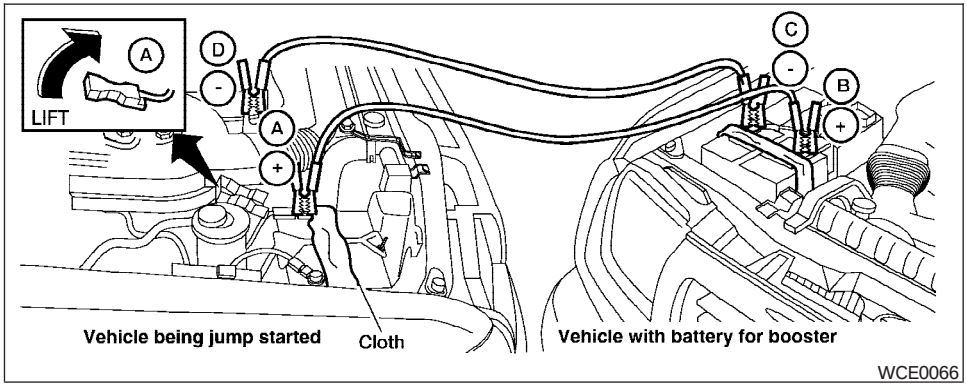

⚠ WARNING

Always follow the instructions below. Failure to do so could result in damage to the charging system and cause personal injury.

1. If the booster battery is in another vehicle, position the two vehicles to bring their batteries near each other.

   Do not allow the two vehicles to touch.

2. Apply the parking brake. Move the shift lever to N (Neutral) (manual transmission) or to P (Park) (automatic transmission). Switch off all unnecessary electrical systems (lights, heater, air conditioner, etc.).

3. Remove vent caps on the battery (if so equipped). Cover the battery with an old cloth to reduce explosion hazard.

4. Connect jumper cables in the sequence illustrated (Ⓐ, Ⓑ, Ⓒ, Ⓓ).

⚠ CAUTION

- **Always connect positive (+) to positive (+) and negative (−) to body ground (for example, strut mounting bolt, engine lift bracket, etc.) — not to the battery.**
- **Make sure the jumper cables do not touch moving parts in the engine compartment and that the cable clamps do not contact any other metal.**

5. Start the engine of the booster vehicle and let it run for a few minutes.

6. Keep the engine speed of the booster vehicle at about 2,000 rpm, and start the engine of the vehicle being jump started.

⚠ CAUTION

Do not keep the starter motor engaged for more than 10 seconds. If the engine does not start right away, turn the key off and wait 3 to 4 seconds before trying again.

7. After starting the engine, carefully disconnect the negative cable and then the positive cable.

8. Replace the vent caps (if so equipped). Be sure to dispose of the cloth used to cover the vent holes as it may be contaminated with corrosive acid.

PUSH STARTING

⚠ WARNING

- **Automatic transmission models cannot be push-started or tow-started. Attempting to do so may cause transmission or other vehicle damage.**
- **Three-way catalyst equipped models should not be started by pushing. The three-way catalyst may be damaged.**
- **Never try to start the vehicle by towing it. When the engine starts, the forward surge could cause the vehicle to collide with the tow vehicle.**

IF YOUR VEHICLE OVERHEATS

If your vehicle is overheating (indicated by an extremely high temperature gauge reading), or if you feel a lack of engine power, detect abnormal noise, etc. take the following steps.

⚠ WARNING

- **Do not continue to drive if your vehicle overheats. Doing so could cause engine damage or a vehicle fire.**
- **To avoid the danger of being scalded, never remove the radiator cap while the engine is still hot. When the radiator cap is removed, pressurized hot water will spurt out, possibly causing serious injury.**
- **Do not open the hood if steam is coming out.**

1. Move the vehicle safely off the road, apply the parking brake and move the shift lever to N (Neutral) (manual transmission) or to P (Park) (automatic transmission).

   Do not stop the engine.

2. Turn off the air conditioner (if so equipped). Open all the windows, move the heater or air conditioner temperature control to maximum hot and fan control to high speed.
3. If engine overheating is caused by climbing a long hill on a hot day, run the engine at a fast idle (approximately 1,500 r/min) until the temperature gauge indicator returns to normal.
4. Get out of the vehicle. Look and listen for steam or coolant escaping from the radiator before opening the hood. Do not open the hood further until no steam or coolant can be seen.
5. Open the engine hood.

⚠ WARNING

If steam or water is coming from the engine, stand clear to prevent getting burned.

6. Visually check drive belts for damage or looseness. Also check if the cooling fan is running. The radiator hoses and radiator should not leak water. If coolant is leaking, the water pump belt is missing or loose, or the cooling fan does not run, stop the engine.

⚠ WARNING

Be careful not to allow your hands, hair, jewelry or clothing to come into contact with, or get caught in, engine belts or the engine cooling fan. The engine cooling fan can start at any time when the coolant temperature is high.

7. After the engine cools down, check the coolant level in the engine coolant reservoir tank with the engine running. Add coolant to the engine coolant reservoir tank if necessary. Have your vehicle repaired at a NISSAN dealer.

When towing your vehicle, all State (Provincial in Canada) and local regulations for towing must be followed. Incorrect towing equipment could damage your vehicle. Towing instructions are available from a NISSAN dealer. Local service operators are generally familiar with the applicable laws and procedures for towing. To assure proper towing and to prevent accidental damage to your vehicle, NISSAN recommends having a service operator tow your vehicle. It is advisable to have the service operator carefully read the following precautions:

⚠ WARNING

- **Never ride in a vehicle that is being towed.**
- **Never get under your vehicle after it has been lifted by a tow truck.**

⚠ CAUTION

- **When towing, make sure that the transmission, axles, steering system and powertrain are in working condition. If any unit is damaged, dollies must be used.**
- **Always attach safety chains before towing.**

For information about towing your vehicle behind a recreational vehicle (RV), refer to “Flat towing” in the “Technical and consumer information” section of this manual.

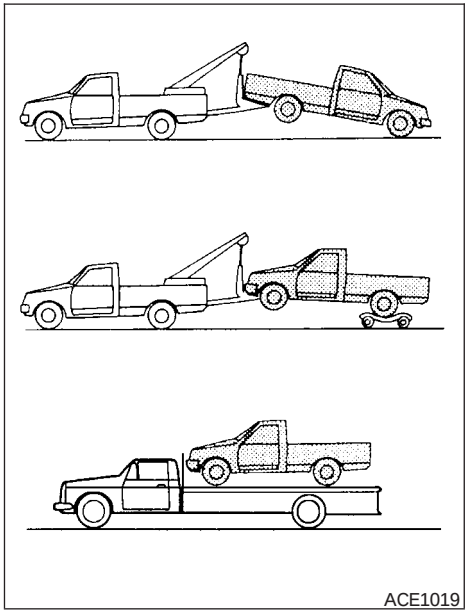

TOWING RECOMMENDED BY NISSAN

Two-wheel drive models

NISSAN recommends that your vehicle be towed with the driving (rear) wheels off the ground or place the vehicle on a flat bed truck as illustrated.

⚠ CAUTION

- **Never tow automatic transmission models with the rear wheels on the ground or four wheels on the ground (forward or backward), as this may cause serious and expensive damage to the transmission. If it is necessary to tow the vehicle with the front wheels raised always use towing dollies under the rear wheels.**
- **When towing automatic or manual transmission models with the front wheels on the ground or on towing dollies:**

– **Turn the ignition key to the OFF position, and secure the steering wheel in a straight-ahead position with a rope or similar device. Never secure the steering wheel by turning the ignition key to the LOCK position. This may damage the steering lock mechanism.**

- **If you have to tow manual transmission models with the rear wheels on the ground (if you do not use towing dollies) or four wheels on the ground:**
  - **Always release the parking brake.**
  - **Move the transmission shift lever to the N (Neutral) position.**
  - **Observe the following restricted towing speeds and distances for manual transmission models only:**

    Speed: Below 60 MPH (97 km/h)

    Distance: Less than 500 miles (805 km)

If the speed or distance must necessarily be greater, remove the propeller shaft before towing to prevent damage to the transmission.

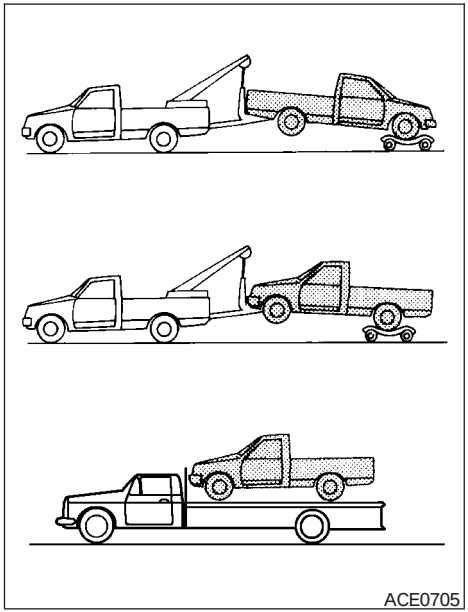

Four-wheel drive models

NISSAN recommends that towing dollies be used when towing your vehicle or place the vehicle on a flat bed truck as illustrated.

⚠ CAUTION

- **Never tow automatic transmission models with the rear wheels on the ground or four wheels on the ground, as this may cause serious and expensive damage to the transmission. If it is necessary to tow the vehicle with the front wheels raised always use towing dollies under the rear wheels.**
- **When towing automatic or manual transmission models with the front wheels on the ground or on towing dollies:**
  - **To disengage auto-lock free- running hubs see the "Starting and driving" section for details.**
  - **Move the transfer case shift lever to the 2H position.**
  - **Turn the ignition key to the OFF position, and secure the steering wheel in a straight-ahead position with a rope or similar device. Never secure the steering wheel by turning the ignition key to the LOCK position. This may damage the steering lock mechanism.**
- **If you have to tow manual transmission models with the rear wheels on the ground (if you do not use towing dollies) or four wheels on the ground:**
  - **To disengage auto-lock free- running hubs see the "Starting and driving" section for details.**
  - **Move the transfer case shift lever to the 2H position.**
  - **Move the transmission shift lever to the N (Neutral) position.**
  - **Always release the parking brake.**
  - **Observe the following restricted towing speeds and distances for manual transmission models only:**

    Speed: Below 60 MPH (97 km/h)

    Distance: Less than 500 miles (805 km)

If the speed or distance must necessarily be greater, remove the propeller shaft before towing to prevent damage to the transmission.

VEHICLE RECOVERY (freeing a stuck vehicle)

⚠ WARNING

- **Stand clear of a stuck vehicle.**
- **Do not spin your tires at high speed. This could cause them to explode and result in serious injury. Parts of your vehicle could also overheat and be damaged.**

⚠ CAUTION

- **Tow chains or cables must be attached only to the vehicle recovery hooks or main structural members of the vehicle. Otherwise, the vehicle body will be damaged.**
- **Pulling devices should be routed so they do not touch any part of the suspension, steering, brake or cooling systems.**
- **Always pull the cable straight out from the front or rear of the vehicle. Never pull the vehicle at an angle.**
- **Pulling devices such as ropes or canvas straps are not recommended for use in vehicle towing or recovery.**

If your vehicle is stuck in sand, snow, mud, etc., use the following procedure:

1. Turn off the Vehicle Dynamic Control System (if so equipped).
2. Make sure the area in front and behind the vehicle is clear of obstructions.
3. Turn the steering wheel right and left to clear an area around the front tires.
4. Slowly rock the vehicle forward and backward.
   - Shift back and forth between R (reverse) and D (drive).
   - Apply the accelerator as little as possible to maintain the rocking motion.
   - Release the accelerator pedal before shifting between R and D.
   - Do not spin the tires above 35 mph (55 km/h).
5. If the vehicle can not be freed after a few tries, contact a professional towing service to remove the vehicle.

MEMO

7 Appearance and care

Cleaning exterior 7-2
Washing 7-2
Waxing 7-2
Removing spots 7-2
Underbody 7-3
Glass 7-3
Aluminum alloy wheels 7-3
Chrome parts 7-3
Cleaning interior 7-3
Floor mats 7-4
Seat belts 7-4
Corrosion protection 7-5
Most common factors contributing to vehicle corrosion 7-5
Environmental factors influence the rate of corrosion 7-5
To protect your vehicle from corrosion 7-5

CLEANING EXTERIOR

In order to maintain the appearance of your vehicle, it is important to take proper care of it.

To protect the paint surfaces, please wash your vehicle as soon as you can:

- after a rainfall to prevent possible damage from acid rain.
- after driving on coastal roads.
- when contaminants such as soot, bird droppings, tree sap, metal particles or bugs get on the paint surface.
- when dust or mud builds up on the surface.

Whenever possible, store or park your vehicle inside a garage or in a covered area.

When it is necessary to park outside, park in a shady area or protect the vehicle with a body cover.

Be careful not to scratch the paint surface when putting on or removing the body cover.

WASHING

Wash dirt off with a wet sponge and plenty of water. Clean the vehicle thoroughly using a mild soap, a special vehicle soap or general purpose dishwashing liquid mixed with clean, lukewarm (never hot) water.

⚠ CAUTION

- **Do not wash the vehicle with strong household soap, strong chemical detergents, gasoline or solvents.**
- **Do not wash the vehicle in direct sunlight or while the vehicle body is hot, as the surface may become water-spotted.**
- **Avoid using tight-napped or rough cloths, such as washing mitts. Care must be taken when removing caked-on dirt or other foreign substances so the paint surface is not scratched or damaged.**

Rinse the vehicle thoroughly with plenty of clean water.

Inside flanges, seams and folds on the doors, hatches and hood are particularly vulnerable to the effects of road salt. Therefore, these areas must be cleaned regularly. Take care that the drain holes in the lower edge of the door are open. Spray water under the body and in the wheel wells to loosen the dirt and wash away road salt.

A damp chamois can be used to dry the vehicle to avoid water spots.

WAXING

Regular waxing protects the paint surface and helps retain new vehicle appearance. After waxing, polishing is recommended to remove built-up residue and to avoid a “weathered” appearance.

A NISSAN dealer can assist you in choosing the proper product.

- Wax your vehicle only after a thorough washing. Follow the instructions supplied with the wax.
- Do not use a wax containing any abrasives, cutting compounds or cleaners that may damage the vehicle finish.
- If the surface does not polish easily, use a “road tar” remover and wax again.

Machine compounding or aggressive polishing on a base coat/clear coat paint finish may dull the finish or leave swirl marks.

REMOVING SPOTS

Remove tar and oil spots, industrial dust, insects, and tree sap as quickly as possible from the surface of the paint to avoid lasting damage or staining. Special cleaning products are available at a NISSAN dealer or any automotive accessory store.

UNDERBODY

In areas where road salt is used in winter, it is necessary to clean the underbody regularly in order to prevent dirt and salt from building up and causing the acceleration of corrosion on the underbody and suspension. Before the winter period and again in the spring, the underseal must be checked and, if necessary, retreated.

GLASS

Use glass cleaner to remove smoke and dust film from the glass surfaces. It is normal for glass to become coated with a film after the vehicle is parked in the hot sun. Glass cleaner and a soft cloth will easily remove this film.

⚠ CAUTION

When cleaning the inside of the windows, do not use sharp-edged tools, abrasive cleaners or chlorine-based disinfectant cleaners. They could damage the electrical conductors, radio antenna elements or rear window defroster elements.

ALUMINUM ALLOY WHEELS

Wash the wheels regularly, especially during winter months in areas where road salt is used. If not removed, road salt could discolor the wheels.

CHROME PARTS

Clean all chrome parts regularly with a non-abrasive chrome polish to maintain the finish.

CLEANING INTERIOR

Occasionally remove loose dust from the interior trim, plastic parts and seats using a vacuum cleaner or soft brush. Wipe the vinyl and leather surfaces with a clean, soft cloth dampened in mild soap solution, then wipe clean with a dry, soft cloth. Before using any fabric protector, read the manufacturer's recommendations. Some fabric protectors contain chemicals that may stain or bleach the seat material.

Use a cloth dampened only with water to clean the meter and gauge lens.

⚠ CAUTION

- **Never use benzine, thinner or any similar material.**
- **Small dirt particles can be abrasive and damaging to leather surfaces and should be removed promptly. Do not use saddle soap, polishes, oils, cleaning fluids, solvents, detergents or ammonia-based cleaners as they may damage the leather's natural finish.**
- **Never use fabric protectors unless recommended by the manufacturer.**
- **Do not use glass or plastic cleaner on meter or gauge lens covers. It may damage the lens cover.**

FLOOR MATS

The use of genuine NISSAN floor mats can extend the life of your vehicle carpet and make it easier to clean the interior. **No matter what mats are used, be sure they are fitted for your vehicle and are properly positioned in the footwell to prevent interference with pedal operation.** Mats should be maintained with regular cleaning and replaced if they become excessively worn.

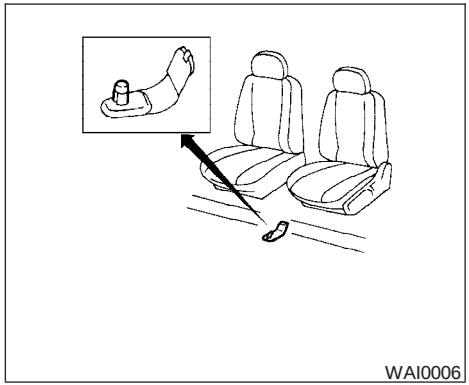

Floor mat positioning aid (driver's side only)

This vehicle includes a front floor mat bracket to act as a floor mat positioning aid. NISSAN floor mats have been specially designed for your vehicle model. The driver's side floor mat has a grommet hole incorporated in it. Position the mat by placing the floor mat bracket hook through the floor mat grommet hole while centering the mat in the footwell.

Periodically check to make certain the mats are properly positioned.

SEAT BELTS

The seat belts can be cleaned by wiping them with a sponge dampened in a mild soap solution. Allow the belts to dry completely in the shade before using them. See "Seat belt maintenance" in the "Safety – Seats, seat belts and supplemental air bags" section of this manual.

⚠ WARNING

Do not allow wet seat belts to roll up in the retractor. NEVER use bleach, dye or chemical solvents to clean the seat belts, since these materials may severely weaken the seat belt webbing.

MOST COMMON FACTORS CONTRIBUTING TO VEHICLE CORROSION

1. The accumulation of moisture-retaining dirt and debris in body panel sections, cavities, and other areas.
2. Damage to paint and other protective coatings caused by gravel and stone chips or minor traffic accidents.

ENVIRONMENTAL FACTORS INFLUENCE THE RATE OF CORROSION

Moisture

Accumulation of sand, dirt and water on the vehicle body underside can accelerate corrosion. Wet floor coverings will not dry completely inside the vehicle, and should be removed for drying to avoid floor panel corrosion.

Relative humidity

Corrosion will be accelerated:

- in areas of high relative humidity.
- in areas where the temperatures stay above freezing.
- where atmospheric pollution exists.
- where road salt is used.

Temperature

High temperatures accelerate the rate of corrosion to those parts which are not well ventilated.

Air pollution

Industrial pollution, the presence of salt in the air in coastal areas, or heavy road salt use accelerates the corrosion process. Road salt also accelerates the disintegration of paint surfaces.

TO PROTECT YOUR VEHICLE FROM CORROSION

- Wash and wax your vehicle often to keep the vehicle clean.
- Always check for minor damage to the paint and repair it as soon as possible.
- Keep drain holes at the bottom of the doors and tailgate open to avoid water accumulation.
- Check the underbody and inside the pick-up box. If any sand, dirt or salt is accumulated, wash it off with water as soon as possible.

⚠ CAUTION

- **NEVER remove dirt, sand or other debris from the passenger compartment by washing it out with a hose. Remove dirt with a vacuum cleaner or broom.**
- **Never allow water or other liquids to come in contact with electronic components inside the vehicle as this may damage them.**

Chemicals used for road surface de-icing are extremely corrosive. They accelerate corrosion and deterioration of underbody components such as the exhaust system, fuel and brake lines, brake cables, floor pan and fenders.

In winter, the underbody must be cleaned periodically.

For additional protection against rust and corrosion, which may be required in some areas, consult a NISSAN dealer.

MEMO

8 Maintenance and do-it-yourself

Maintenance requirements 8-2
General maintenance 8-2
Explanation of general maintenance items 8-2
Maintenance precautions 8-5
Engine compartment check locations 8-6
Engine cooling system 8-9
Checking engine coolant level 8-9
Changing engine coolant 8-10
Engine oil 8-10
Checking engine oil level 8-10
Changing engine oil 8-11
Changing engine oil filter 8-13
Automatic transmission fluid 8-14
Temperature conditions for checking 8-14
Power steering fluid 8-15
Brake and clutch fluid 8-16
Brake fluid 8-16
Clutch fluid 8-16
Window washer fluid 8-17
Window washer fluid reservoir 8-17
Battery 8-17
Jump starting 8-19
Drive belts 8-19
Spark plugs 8-20
Replacing spark plugs 8-20
Air cleaner 8-22
In-cabin Microfilter (if so equipped) 8-23
Windshield wiper blades 8-25
Cleaning 8-25
Replacing 8-25
Parking brake and brake pedal 8-26
Checking parking brake 8-26
Checking brake pedal 8-26
Brake booster 8-27
Fuses 8-28
Passenger compartment 8-28
Keyfob battery replacement 8-29
Lights 8-30
Headlights 8-30
Fog lights (if so equipped) 8-31
Exterior and interior lights 8-32
Wheels and tires 8-35
Tire pressure 8-35
Tire labeling 8-38
Types of tires 8-41
Tire chains 8-41
Changing wheels and tires 8-42

MAINTENANCE REQUIREMENTS

Your new NISSAN has been designed to have minimum maintenance requirements with longer service intervals to save you both time and money. However, some day-to-day and regular maintenance is essential to maintain your NISSAN's good mechanical condition, as well as its emission and engine performance.

It is the owner's responsibility to make sure that the scheduled maintenance, as well as general maintenance, is performed.

As the vehicle owner, you are the only one who can ensure that your vehicle receives proper maintenance. You are a vital link in the maintenance chain.

Scheduled maintenance

For your convenience, both required and optional scheduled maintenance items are described and listed in your "NISSAN Service and Maintenance Guide." You must refer to that guide to ensure that necessary maintenance is performed on your NISSAN at regular intervals.

General maintenance

General maintenance includes those items which should be checked during normal day-to-day operation. They are essential for proper vehicle operation. It is your responsibility to perform these maintenance procedures regularly as prescribed.

Performing general maintenance checks requires minimal mechanical skill and only a few general automotive tools.

These checks or inspections can be done by you, a qualified technician, or, if you prefer, a NISSAN dealer.

Where to go for service

If maintenance service is required or your vehicle appears to malfunction, have the systems checked and corrected by a NISSAN dealer.

NISSAN technicians are well-trained specialists who are kept up-to-date with the latest service information through technical bulletins, service tips, and in-dealership training programs. They are completely qualified to work on NISSAN vehicles **before** they work on your vehicle, rather than after they have worked on it.

You can be confident that a NISSAN dealer's service department performs the best job to meet the maintenance requirements on your vehicle — in a reliable and economic way.

GENERAL MAINTENANCE

During the normal day-to-day operation of the vehicle, general maintenance should be performed regularly as prescribed in this section. If you detect any unusual sounds, vibrations or smells, be sure to check for the cause or have a NISSAN dealer do it promptly. In addition, you should notify a NISSAN dealer if you think that repairs are required.

When performing any checks or maintenance work, closely observe the "Maintenance precautions" later in this section.

EXPLANATION OF GENERAL MAINTENANCE ITEMS

Additional information on the following items with "*" is found later in this section.

Outside the vehicle

The maintenance items listed here should be performed from time to time, unless otherwise specified.

Doors, engine hood and tailgate Check that the doors, engine hood and tailgate operate properly. Also ensure that all latches lock securely. Lubricate hinges, latches, latch pins, rollers and links as necessary. Make sure that the secondary latch keeps the hood from opening when the primary latch is released.

When driving in areas using road salt or other corrosive materials, check lubrication frequently.

Lights* Clean the headlights on a regular basis. Make sure that the headlights, stop lights, tail lights, turn signal lights, and other lights are all operating properly and installed securely. Also check headlight aim.

Road wheel nuts* When checking the tires, make sure no wheel nuts are missing, and check for any loose wheel nuts. Tighten if necessary.

Tire rotation* Tires should be rotated every 7,500 miles (12,000 km).

Tires* Check the pressure with a gauge often and always prior to long distance trips. If necessary, adjust the pressure in all tires, including the spare, to the pressure specified. Check carefully for damage, cuts or excessive wear.

Wheel alignment and balance If the vehicle should pull to either side while driving on a straight and level road, or if you detect uneven or abnormal tire wear, there may be a need for wheel alignment. If the steering wheel or seat vibrates at normal highway speeds, wheel balancing may be needed.

- For additional information regarding tires, refer to “Important Tire Safety Information” (US) or “Tire Safety Information” (Canada) in the Warranty Information Booklet .

Windshield Clean the windshield on a regular basis. Check the windshield at least every six months for cracks or other damage. Have a damaged windshield repaired by a qualified repair facility.

Windshield wiper blades* Check for cracks or wear if they do not wipe properly.

Inside the vehicle

The maintenance items listed here should be checked on a regular basis, such as when performing periodic maintenance, cleaning the vehicle, etc.

Additional information on the following items with an “*” is found later in this section.

Accelerator pedal Check the pedal for smooth operation and make sure the pedal does not bind or require uneven effort. Keep the floor mat away from the pedal.

Automatic transmission P (Park) position mechanism Check that the lock release button on the shift selector lever operates properly and smoothly. On a fairly steep hill check that your vehicle is held securely with the selector lever in the P (Park) position without applying any brakes.

Brake pedal and booster* Check the pedal for smooth operation and make sure it has the proper distance under it when depressed fully. Check the brake booster function. Be certain to keep the floor mat away from the pedal.

Brakes Check that the brakes do not pull the vehicle to one side when applied.

Clutch pedal* Make sure the pedal operates smoothly and check that it has the proper free travel.

Parking brake* Check that the pedal has the proper travel and confirm that your vehicle is held securely on a fairly steep hill with only the parking brake applied.

Seats Check seat position controls such as seat adjusters, seatback recliner, etc. to ensure they operate smoothly and all latches lock securely in every position. Check that the head restraints move up and down smoothly and the locks (if so equipped) hold securely in all latched positions.

Seat belts Check that all parts of the seat belt system (for example, buckles, anchors, adjusters and retractors) operate properly and smoothly, and are installed securely. Check the belt webbing for cuts, fraying, wear or damage.

Steering wheel Check for changes in the steering system, such as excessive freeplay, hard steering or strange noises.

Warning lights and chimes Make sure all warning lights and chimes are operating properly.

Windshield wiper and washer* Check that the wipers and washer operate properly and that the wipers do not streak.

Windshield defroster Check that the air comes out of the defroster outlets properly and in sufficient quantity when operating the heater or air conditioner.

Under the hood and vehicle

The maintenance items listed here should be checked periodically (for example, each time you check the engine oil or refuel).

Automatic transmission fluid level* Check the level after putting the selector lever in P with the engine idling at operating temperature.

Battery* Check the fluid level in each cell. It should be between the MAX and MIN lines. Vehicles operated in high temperatures or under severe conditions require frequent checks of the battery fluid level.

Brake and clutch fluid levels* Make sure that the brake and clutch fluid level is between the MIN and MAX lines on the reservoir.

Engine coolant level* Check the coolant level when the engine is cold.

Engine drive belts* Make sure the drive belts are not frayed, worn, cracked or oily.

Engine oil level* Check the level after parking the vehicle on a level surface with the engine off. Wait more than 10 minutes for the oil to drain back into the oil pan.

Exhaust system Make sure there are no loose supports, cracks or holes. If the sound of the exhaust seems unusual or there is a smell of exhaust fumes, immediately have the exhaust system inspected by a NISSAN dealer. See the carbon monoxide warning in the “Starting and driving” section of this manual.

Fluid leaks Check under the vehicle for fuel, oil, water or other fluid leaks after the vehicle has been parked for a while. Water dripping from the air conditioner after use is normal. If you should notice any leaks or if gasoline fumes are evident, check for the cause and have it corrected immediately.

Power steering fluid level* and lines Check the level when the fluid is cold, with the engine off. Check the lines for proper attachment, leaks, cracks, etc.

Radiator and hoses Check the front of the radiator and clean off any dirt, insects, leaves, etc., that may have accumulated. Make sure the hoses have no cracks, deformation, rot or loose connections.

Underbody The underbody is frequently exposed to corrosive substances such as those used on icy roads or to control dust. It is very important to remove these substances from the underbody, otherwise rust may form on the floor pan, frame, fuel lines and exhaust system. At the end of winter, the underbody should be thoroughly flushed with plain water, in those areas where mud and dirt may have accumulated. See the “Appearance and care” section of this manual.

Windshield washer fluid* Check that there is adequate fluid in the reservoir.

MAINTENANCE PRECAUTIONS

When performing any inspection or maintenance work on your vehicle, always take care to prevent serious accidental injury to yourself or damage to the vehicle. The following are general precautions which should be closely observed.

⚠ WARNING

- **Park the vehicle on a level surface, apply the parking brake securely and block the wheels to prevent the vehicle from moving. For manual transmission models, move the shift lever to N (Neutral). For automatic transmission models, move the selector lever to P (Park).**
- **Be sure the ignition key is in the OFF or LOCK position when performing any parts replacement or repairs.**
- **Never leave the engine or automatic transmission related component harnesses disconnected while the ignition switch is in the ON position.**
- **Never connect or disconnect the battery or any transistorized component while the ignition switch is in the ON position.**
- **If you must work with the engine running, keep your hands, clothing, hair and tools away from moving fans, belts and any other moving parts.**
- **It is advisable to secure or remove any loose clothing and remove any jewelry, such as rings, watches, etc. before working on your vehicle.**
- **Always wear eye protection whenever you work on your vehicle.**
- **If you must run the engine in an enclosed space such as a garage, be sure there is proper ventilation for exhaust gases to escape.**
- **Never get under the vehicle while it is supported only by a jack. If it is necessary to work under the vehicle, support it with safety stands.**
- **Keep smoking materials, flame and sparks away from the fuel tank and battery.**
- **On gasoline engine models with the multiport fuel injection (MFI) system, the fuel filter or fuel lines should be serviced by a NISSAN dealer because the fuel lines are under high pressure even when the engine is off.**

⚠ CAUTION

- **Do not work under the hood while the engine is hot. Turn the engine off and wait until it cools down.**
- **Avoid contact with used engine oil and coolant. Improperly disposed engine oil, engine coolant and/or other vehicle fluids can damage the environment. Always conform to local regulations for disposal of vehicle fluid.**

This “Maintenance and do-it-yourself” section gives instructions regarding only those items which are relatively easy for an owner to perform.

A genuine NISSAN service manual is also available. See “Owner’s Manual/Service Manual order information” in the “Technical and consumer information” section of this manual.

You should be aware that incomplete or improper servicing may result in operating difficulties or excessive emissions, and could affect warranty coverage. **If in doubt about any servicing, have it done by a NISSAN dealer.**

ENGINE COMPARTMENT CHECK LOCATIONS

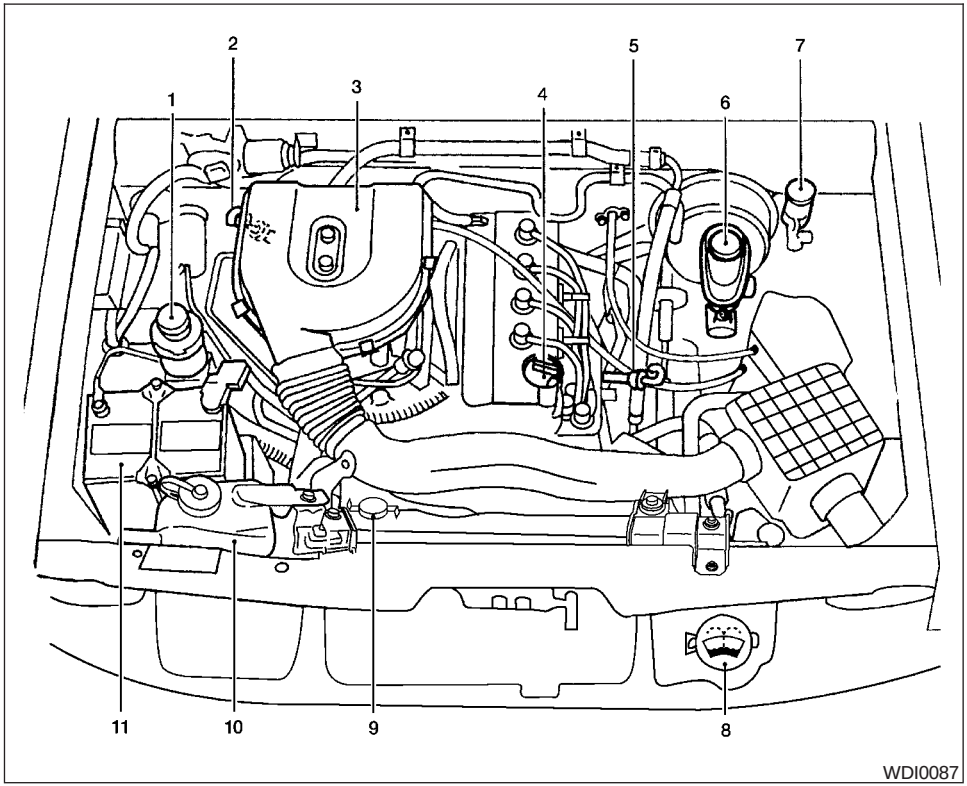

KA24DE engine

1. Power steering fluid reservoir
2. Automatic transmission fluid dipstick (A/T model)
3. Air cleaner
4. Engine oil filler cap
5. Engine oil dipstick
6. Brake fluid reservoir
7. Clutch fluid reservoir (M/T model)
8. Windshield washer fluid reservoir
9. Radiator cap
10. Engine coolant reservoir
11. Battery

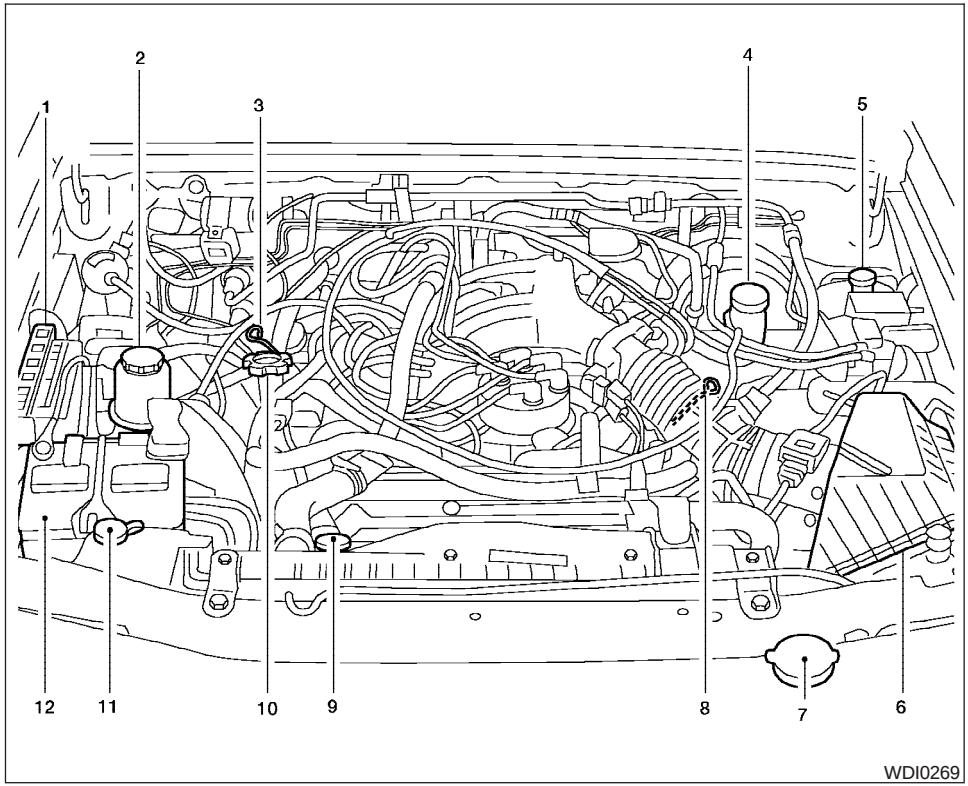

VG33E engine

1. Fuse/fusible link box
2. Power steering fluid reservoir
3. Automatic transmission fluid dipstick (A/T model)
4. Brake fluid reservoir
5. Clutch fluid reservoir (M/T model)
6. Air cleaner
7. Windshield washer fluid reservoir
8. Engine oil dipstick
9. Radiator cap
10. Engine oil filler cap
11. Engine coolant reservoir
12. Battery

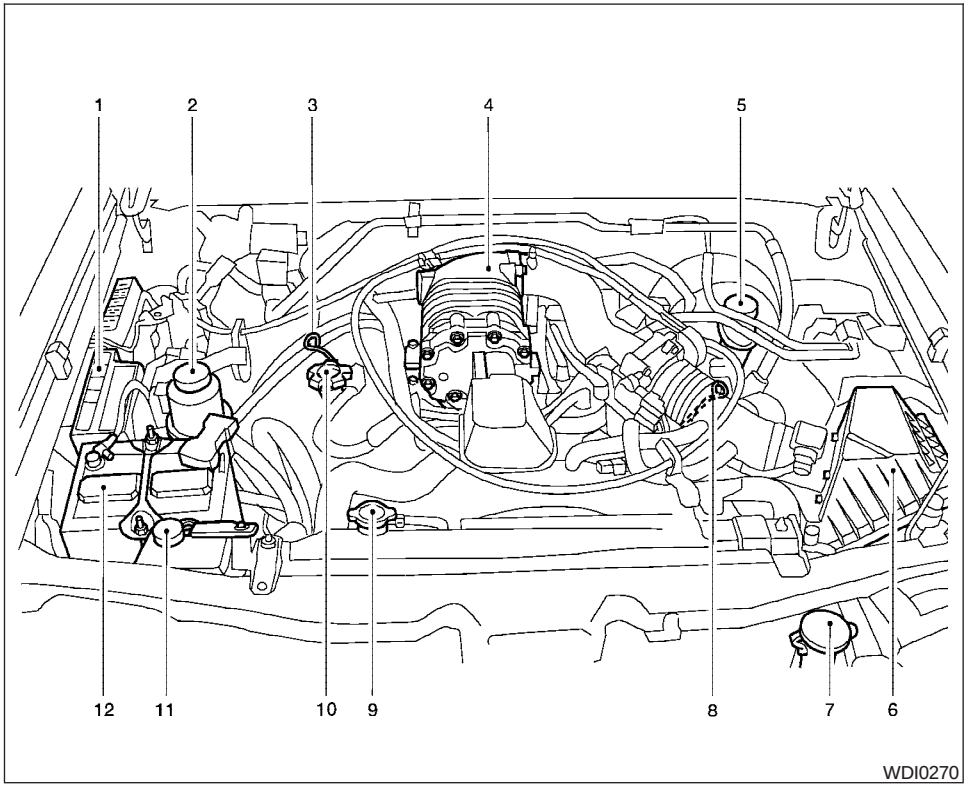

VG33ER engine

1. Fuse/fusible link box
2. Power steering fluid reservoir
3. Automatic transmission fluid dipstick (A/T model)
4. Supercharger
5. Brake fluid reservoir
6. Air cleaner
7. Windshield washer fluid reservoir
8. Engine oil dipstick
9. Radiator cap
10. Engine oil filler cap
11. Engine coolant reservoir
12. Battery

ENGINE COOLING SYSTEM

The engine cooling system is filled at the factory with a high-quality, year-round, anti-freeze coolant solution. The anti-freeze solution contains rust and corrosion inhibitors; therefore, additional engine cooling system additives are not necessary.

⚠ WARNING

- **Never remove the radiator cap when the engine is hot. Wait until the engine and radiator cool down. Serious burns could be caused by high pressure fluid escaping from the radiator. See precautions in "If your vehicle overheats" found in the "In case of emergency" section of this manual.**
- **The radiator is equipped with a pressure type radiator cap. To prevent engine damage, use only a genuine NISSAN radiator cap.**

Outside temperature down to		Genuine NISSAN Long Life Anti-freeze coolant or equivalent	Demineralized or distilled water
°C	°F		
-35	-30	50%	50%

⚠ CAUTION

When adding or replacing coolant, be sure to use only a Genuine NISSAN Long Life Anti-freeze Coolant (green) or equivalent with the proper mixture ratio of 50% anti-freeze and 50% demineralized or distilled water. The use of other types of coolant solutions or coolant colors, such as orange, may damage the engine cooling system.

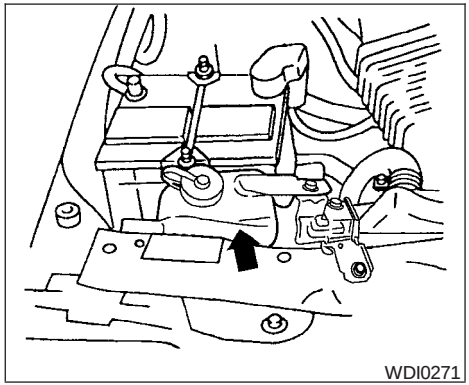

CHECKING ENGINE COOLANT LEVEL

Check the coolant level **in the reservoir when the engine is cold.** If the coolant level is below the MIN level, add coolant to the MAX level. If the reservoir is empty, check the coolant level in the radiator **when the engine is cold.** If there is insufficient coolant in the radiator, fill the radiator with coolant up to the filler opening and also add it to the reservoir up to the MAX level.

If the cooling system frequently requires coolant, have it checked by a NISSAN dealer.

CHANGING ENGINE COOLANT

A NISSAN dealer can change the engine coolant. The service procedure can be found in the NISSAN Service Manual.

Improper servicing can result in reduced heater performance and engine overheating.

⚠ WARNING

- **To avoid the danger of being scalded, never change the coolant when the engine is hot.**
- **Never remove the radiator cap when the engine is hot. Serious burns could be caused by high pressure fluid escaping from the radiator.**
- **Avoid direct skin contact with used coolant. If skin contact is made, wash thoroughly with soap or hand cleaner as soon as possible.**
- **Keep coolant out of the reach of children and pets.**

Engine coolant must be disposed of properly. Check your local regulations.

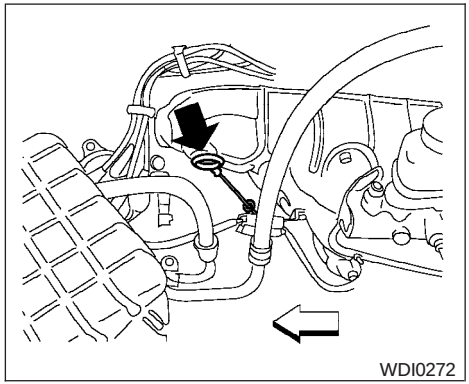

KA24DE engine

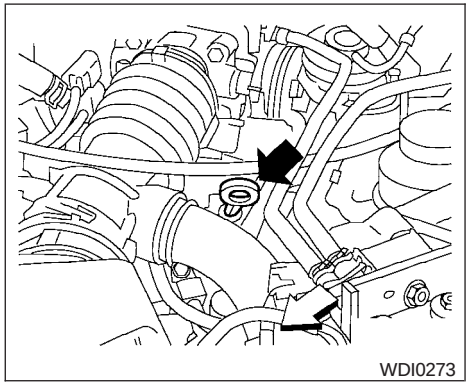

VG33E/VG33ER engine

CHECKING ENGINE OIL LEVEL

1. Park the vehicle on a level surface and apply the parking brake.
2. Start the engine and let it idle until it reaches operating temperature.
3. Turn off the engine. **Wait more than 10 minutes for the oil to drain back into the oil pan.**
4. Remove the dipstick and wipe it clean. Reinsert it all the way.
5. Remove the dipstick again and check the oil level. It should be between the H (High) and L (Low) marks. This is the normal operating oil level range. If the oil level is below the L (Low) mark, remove the oil filler cap and pour recommended oil through the opening. **Do not overfill.**

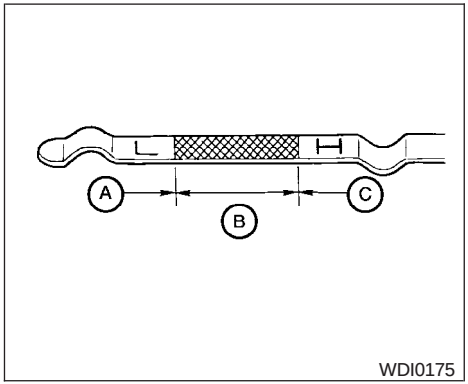

KA24DE engine

6. Recheck oil level with the dipstick.

It is normal to add some oil between oil maintenance intervals or during the break-in period, depending on the severity of operating conditions.

⚠ CAUTION

Oil level should be checked regularly. Operating the engine with an insufficient amount of oil can damage the engine, and such damage is not covered by warranty.

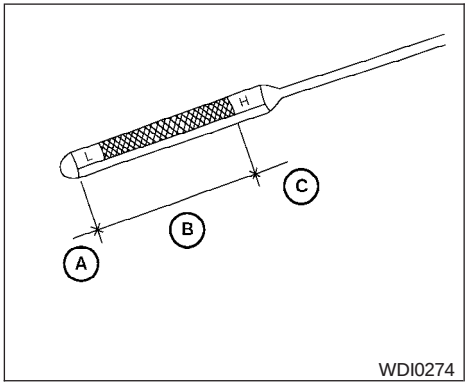

VG33E/VG33ER engine

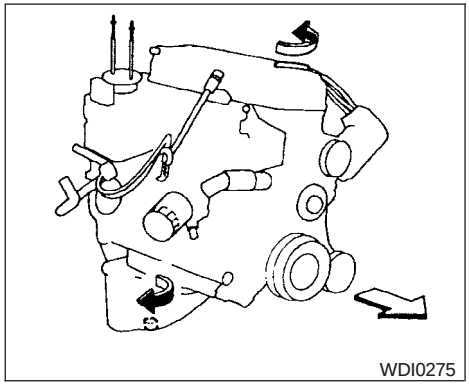

KA24DE engine

CHANGING ENGINE OIL

1. Park the vehicle on a level surface and apply the parking brake.
2. Start the engine and let it idle until it reaches operating temperature, then turn it off.
3. Remove the oil filler cap by turning it counterclockwise.
4. Place a large drain pan under the drain plug.

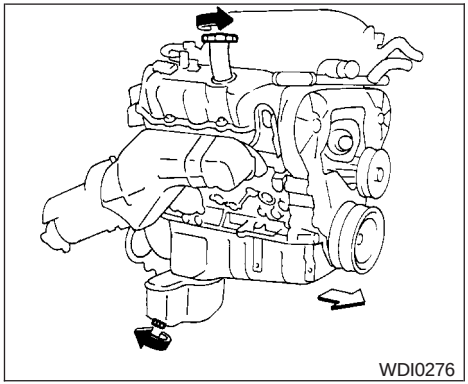

VG33E/VG33ER engine

5. Remove the drain plug with a wrench by turning it counterclockwise and completely drain the oil.

   If the oil filter is to be changed, remove and replace it at this time. See “Changing engine oil filter” later in this section.

⚠ WARNING

- **Prolonged and repeated contact with used engine oil may cause skin cancer.**
- **Try to avoid direct skin contact with used oil. If skin contact is made, wash thoroughly with soap or hand cleaner as soon as possible.**
- **Keep used engine oil out of reach of children.**

⚠ CAUTION

Be careful not to burn yourself. The engine oil may be hot.

- **Waste oil must be disposed of properly.**
- **Check your local regulations.**

6. Clean and reinstall the drain plug and a new washer. Securely tighten the drain plug with a wrench. Do not use excessive force.

   Drain plug tightening torque:
   22 - 29 ft-lb (29 - 39 N·m)

7. Refill engine with recommended oil through the oil filler opening, then install the oil filler cap securely.

   See “Capacities and recommended fuel/lubricants” in the “Technical and consumer information” section of this manual for drain and refill capacity.

   The drain and refill capacity depends on the oil temperature and drain time. Use these specifications for reference only. Always use the dipstick to determine when the proper amount of oil is in the engine.

8. Start the engine. Check for leakage around the drain plug and oil filter. Correct as required.
9. Turn the engine off and wait more than 10 minutes. Check the oil level with the dipstick. Add engine oil if necessary.

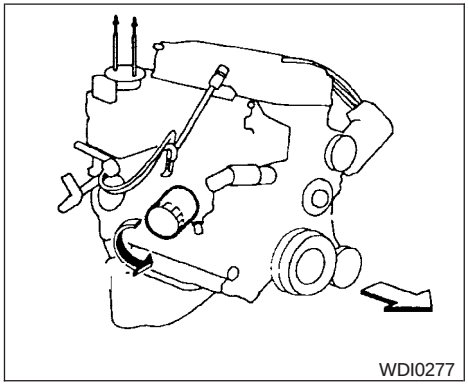

KA24DE engine

CHANGING ENGINE OIL FILTER

1. Park the vehicle on a level surface and apply the parking brake.
2. Turn the engine off.
3. Remove the splash shield.
   - Remove the six push pins.
   - Remove the six bolts and the splash shield.
4. Place a large drain pan under the oil filter.

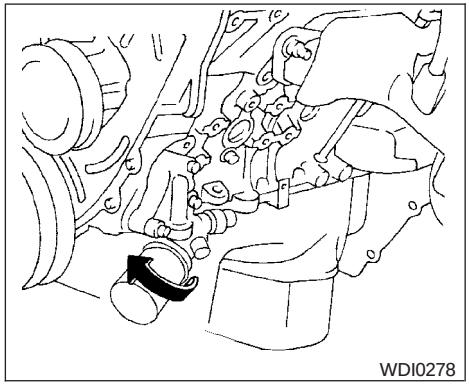

VG33E/VG33ER engine

⚠ CAUTION

Be careful not to burn yourself. The engine oil may be hot.

5. Loosen the oil filter with an oil filter wrench. Then remove the oil filter by turning it by hand.
6. Wipe the engine oil filter mounting surface with a clean rag.

   Be sure to remove any old gasket material remaining on the mounting surface of the engine.
7. Coat the gasket on the new filter with clean engine oil.
8. Screw on the oil filter until a slight resistance is felt, then tighten an additional 2/3 turn.
9. Start the engine and check for leakage around the oil filter. Correct as required.
10. Turn the engine off and wait more than 10 minutes. Check the oil level. Add engine oil if necessary.
11. Install the splash shield.

⚠ WARNING

- **When the engine is running, keep hands, jewelry and clothing away from any moving parts such as the cooling fan and drive belts.**
- **Automatic transmission fluid is poisonous and should be stored carefully in marked containers out of the reach of children.**

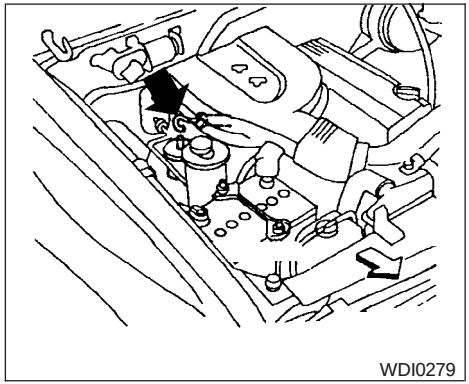

KA24DE engine

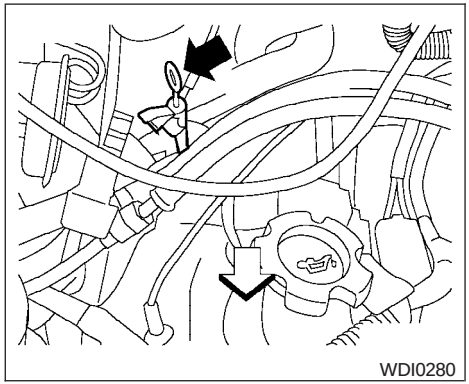

VG33E/VG33ER engine

TEMPERATURE CONDITIONS FOR CHECKING

- The fluid level should be checked using the HOT range on the dipstick after the following conditions have been met:
  - The engine should be warmed up to operating temperature.
  - The vehicle should be driven at least 5 minutes.
  - The automatic transmission fluid should be warmed to 122 - 176°F (50 - 80°C).
- The fluid can be checked at fluid temperatures of 86 - 122°F (30 - 50°C) using the COLD range on the dipstick after the engine is warmed up and before driving. However, the fluid should be re-checked using the HOT range.

1. Park the vehicle on a level surface and set the parking brake.
2. Start the engine and then move the shift selector lever through each gear range, ending in P (Park).
3. Check the fluid level with the engine idling.

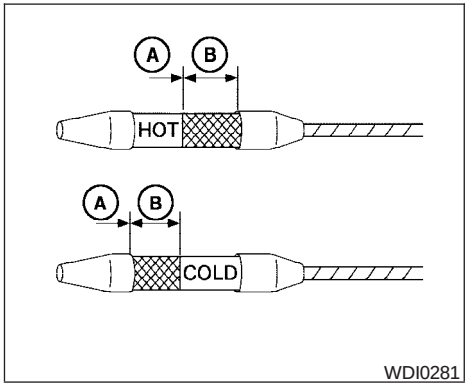

WDI0281

4. Remove the dipstick and wipe it clean with lint-free paper.
5. Reinsert the dipstick into the dipstick tube as far as it will go.
6. Remove the dipstick and note the reading. If the automatic transmission fluid level is within the normal operating range Ⓑ, no additional fluid is required. If the fluid level is low Ⓐ add fluid through the dipstick tube.

⚠ CAUTION

DO NOT OVERFILL. Use ONLY Genuine Nissan Matic D ATF (Continental U.S. and Alaska) or Canada NISSAN Automatic Transmission Fluid. DEXRON™ III/MERCON™ or equivalent may also be used. Outside the continental United States and Alaska contact a NISSAN dealership for more information regarding suitable fluids, including recommended brand(s) of DEXRON™ III/MERCON™ automatic transmission fluid.

NOTE:

If the vehicle has been driven for a long time at high speeds, or in city traffic in hot weather, or if it is being used to pull a trailer, the fluid level cannot be read accurately. You should wait until the fluid has cooled down (about 30 minutes) before checking fluid level.

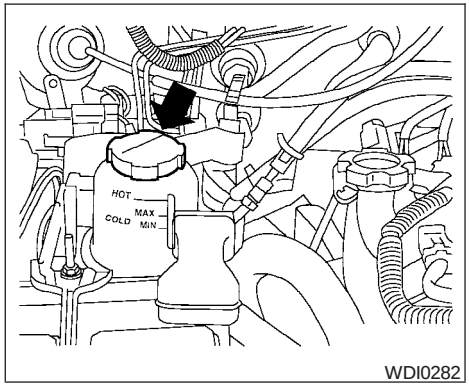

WDI0282

The fluid level should be checked using the HOT MAX range on the power steering fluid reservoir at fluid temperatures of 122° - 176°F (50° - 80°C) or using the COLD MAX range on the power steering fluid reservoir at fluid temperatures of 32° - 86°F (0° - 30°C).

If the fluid is below the MIN line, add Genuine NISSAN PSF fluid. Remove the cap and fill through the opening.

⚠ CAUTION

- **DO NOT OVERFILL.**
- **Recommended fluid is Genuine NISSAN PSF or equivalent.**

BRAKE AND CLUTCH FLUID

For further brake and clutch fluid specification information, refer to “Capacities and recommended fuel/lubricants” in the “Technical and consumer information” section of this manual.

⚠ WARNING

Use only new fluid from a sealed container. Old, inferior or contaminated fluid may damage the brake and clutch systems. The use of improper fluids can damage the brake system and affect the vehicle’s stopping ability.

⚠ CAUTION

Do not spill the fluid on any painted surfaces. This will damage the paint. If fluid is spilled, immediately wash the surface with water.

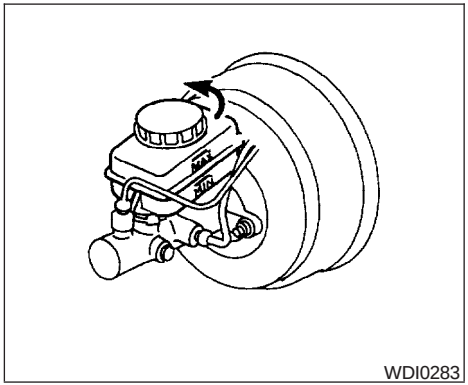

WDI0283

BRAKE FLUID

Check the brake fluid level in the reservoir. If the fluid level is below the MIN line or the brake warning light comes on, add Genuine NISSAN Super Heavy Duty Brake Fluid or equivalent **DOT 3** fluid up to the MAX line. If fluid must be added frequently, the system should be checked by a NISSAN dealer.

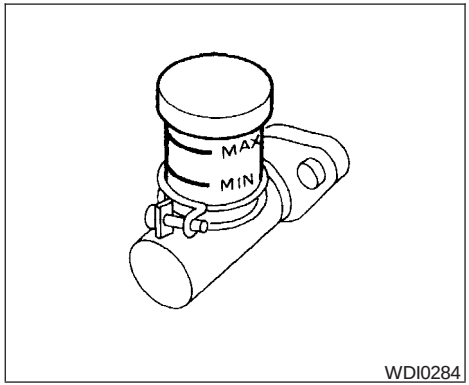

WDI0284

CLUTCH FLUID

Check the clutch fluid level in the reservoir (manual transmissions only). If the fluid level is below the MIN line, add Genuine NISSAN Super Heavy Duty Brake Fluid or equivalent **DOT 3** fluid up to the MAX line. If fluid must be added frequently, the system should be checked by a NISSAN dealer.

For further brake and clutch fluid specification information, refer to “Capacities and recommended fuel/lubricants” in the “Technical and consumer information” section of this manual.

WINDOW WASHER FLUID

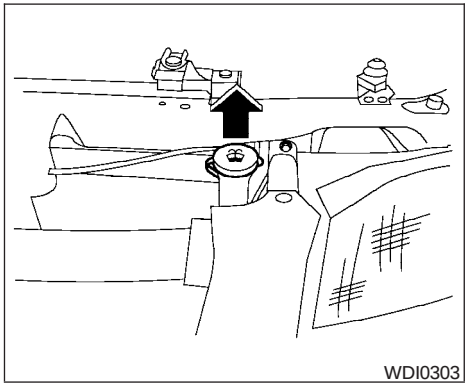

WINDOW WASHER FLUID RESERVOIR

Fill the window washer fluid reservoir periodically. Add window washer fluid when the light comes on (if so equipped).

To fill the window washer fluid reservoir, lift the cap off the reservoir tank and pour the window washer fluid into the tank opening.

Add a washer solvent to the washer for better cleaning. In the winter season, add a windshield washer antifreeze. Follow the manufacturer's instructions for the mixture ratio.

Refill the reservoir more frequently when driving conditions require an increased amount of window washer fluid.

Recommended fluid is Genuine NISSAN Windshield Washer Concentrate Cleaner & Antifreeze or equivalent.

⚠ CAUTION

- **Do not substitute engine anti-freeze coolant for window washer solution. This may result in damage to the paint.**
- **Do not fill the window washer reservoir tank with washer fluid concentrates at full strength. Some methyl alcohol based washer fluid concentrates may permanently stain the grille if spilled while filling the window washer reservoir tank.**
- **Pre-mix washer fluid concentrates with water to the manufacturer's recommended levels before pouring the fluid into the window washer reservoir tank. Do not use the window washer reservoir tank to mix the washer fluid concentrate and water.**

BATTERY

- Keep the battery surface clean and dry. Any corrosion should be washed off with a solution of baking soda and water.
- Make certain the terminal connections are clean and securely tightened.
- If the vehicle is not to be used for 30 days or longer, disconnect the negative (-) battery terminal cable to prevent discharge.

⚠ WARNING

- **Do not expose the battery to flames or electrical sparks. Hydrogen gas generated by the battery is explosive. Do not allow battery fluid to contact your skin, eyes, fabrics or painted surfaces. After touching a battery or battery cap, do not touch or rub your eyes. Thoroughly wash your hands. If the acid contacts your eyes, skin or clothing, immediately flush with water for at least 15 minutes and seek medical attention.**
- **Do not operate the vehicle if the fluid in the battery is low. Low battery fluid can cause a higher load on the battery which can generate heat, reduce battery life, and in some cases lead to an explosion.**

- **When working on or near a battery, always wear suitable eye protection and remove all jewelry.**
- **Battery posts, terminals and related accessories contain lead and lead compounds. Wash hands after handling.**
- **Keep battery out of the reach of children.**

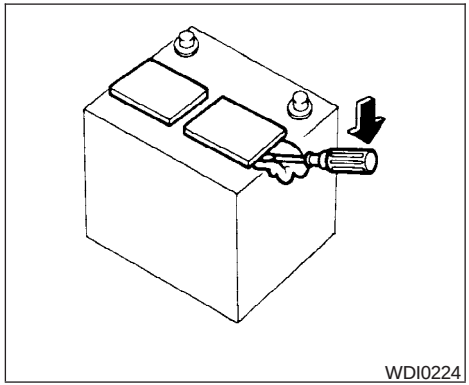

1. Remove the battery caps with a screwdriver as shown. Use a cloth to protect the battery case.

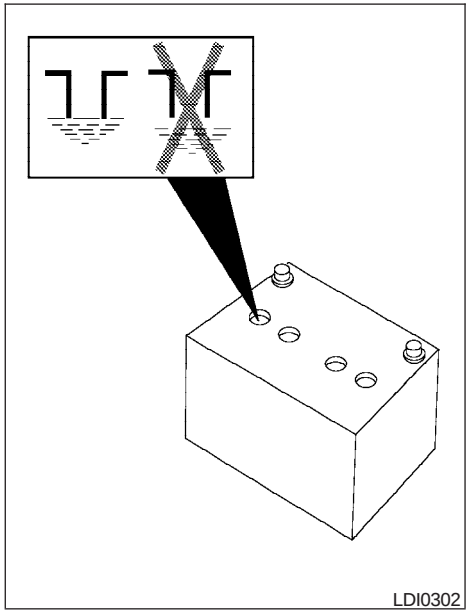

2. Check the fluid level in each cell If it is necessary to add fluid, add only distilled water to bring the level up to the bottom of the filler opening. **Do not overfill.**

Vehicles operated in high temperatures or under severe conditions require frequent checks of the battery fluid level.

JUMP STARTING

If jump starting is necessary, see “Jump starting” in the “In case of emergency” section of this manual. If the engine does not start by jump starting, the battery may have to be replaced. Contact a NISSAN dealer.

DRIVE BELTS

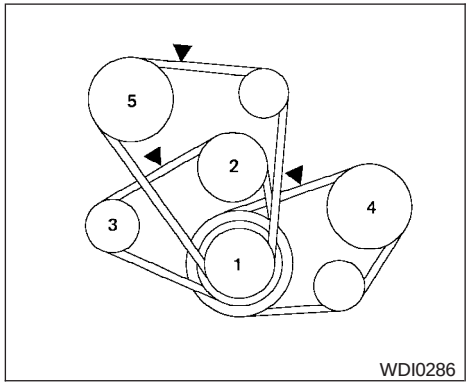

KA24DE engine

1 Crankshaft
2 Water pump
3 Generator
4 Air conditioner compressor
5 Power steering fluid pump
▲ : Tension checking points

⚠ WARNING

Be sure the ignition key is in the OFF or LOCK position. The engine could rotate unexpectedly.

1. Visually inspect each belt for signs of unusual wear, cuts, fraying or looseness. If the belt is in poor condition or is loose, have it replaced or adjusted by a NISSAN dealer.
2. Have the belts checked regularly for condition and tension in accordance with the maintenance schedule found in the “NISSAN Service and Maintenance Guide”.

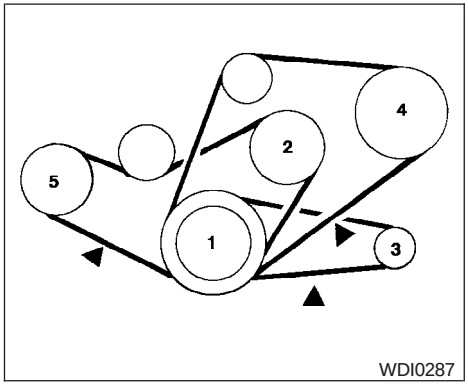

VG33E engine

1 Crankshaft
2 Water pump
3 Generator
4 Air conditioner compressor
5 Power steering fluid pump
▲ : Tension checking points

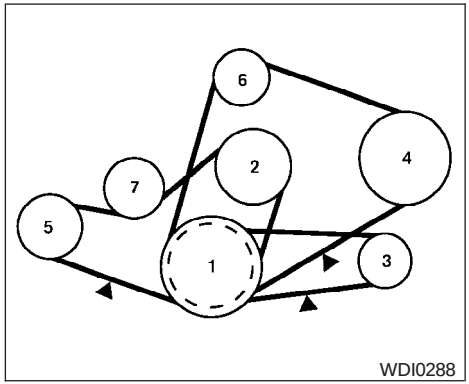

VG33ER engine

1 Crankshaft
2 Water pump
3 Generator
4 Air conditioner compressor
5 Power steering pump
6 Supercharger
7 Idler
▲ : Tension checking points

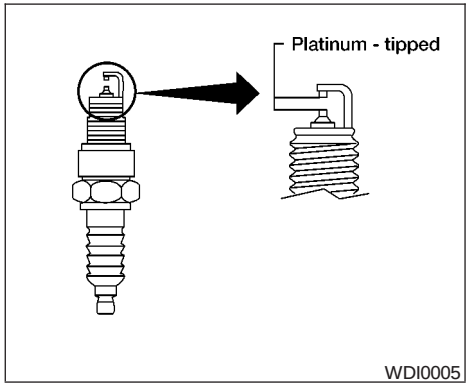

REPLACING SPARK PLUGS

Platinum-tipped spark plugs

It is not necessary to replace platinum-tipped spark plugs as frequently as conventional type spark plugs because they last much longer. Follow the maintenance schedule, but do not reuse the spark plugs by cleaning or regapping.

- **Always replace spark plugs with recommended or equivalent ones.**

⚠ WARNING

Be sure the engine and ignition switch are off and that the parking brake is engaged securely.

⚠ CAUTION

Be sure to use the correct socket to remove the spark plugs. An incorrect socket can damage the spark plugs.

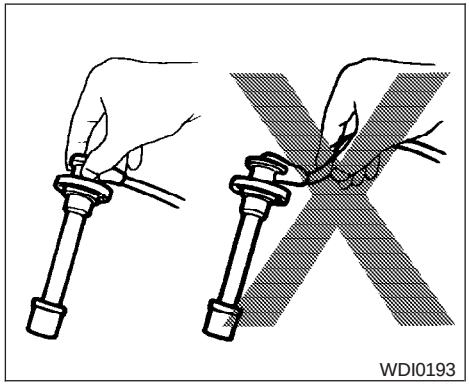

KA24DE engine

Except supercharger

1. Disconnect the spark plug cables.

   When disconnecting, always hold the boots — not the cables. Mark all cables to identify their original location.

2. Remove the spark plugs with a spark plug socket.

   The plug socket has a rubber seal that holds the spark plug so it does not fall when it is pulled out. Make sure each spark plug is snugly fitted into the spark plug socket.

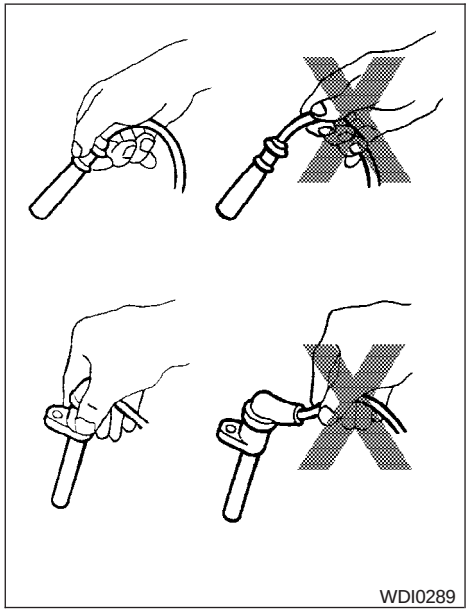

VG33E/VG33ER engine

3. Fit the new plugs, one at a time, into the spark plug socket and install them. **Use only the specified spark plugs.** Turn each plug several full turns by hand, then tighten with the spark plug socket to the correct torque. Do not overtighten.

Spark plug tightening torque:

14 - 22 ft-lb (20 - 29 N·m)

4. Reconnect the spark plug cables to their original positions.

With Supercharger

If replacement is required, please see your NISSAN dealer for assistance.

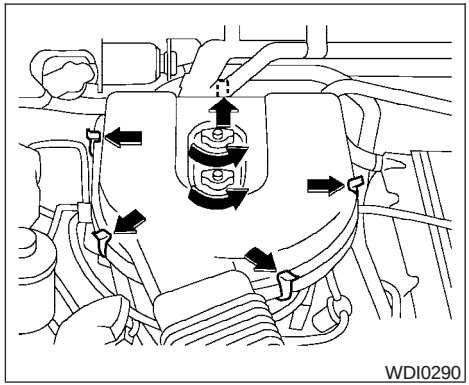
WDI0290

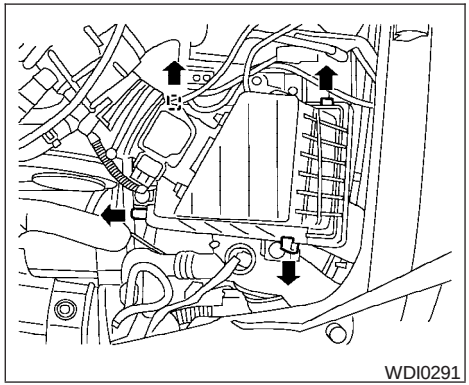
WDI0291

The air cleaner filter should not be cleaned and reused. Replace it according to the maintenance intervals shown in the “NISSAN Service and Maintenance Guide.” When replacing the filter, wipe the inside of the air cleaner filter housing and the cover with a damp cloth.

⚠ WARNING

- **Operating the engine with the air cleaner removed can cause you or others to be burned. The air cleaner not only cleans the air, it stops the flame if the engine backfires. If it isn’t there, and the engine backfires, you could be burned. Do not drive with the air cleaner removed, and be careful when working on the engine with the air cleaner removed.**

- **Never pour fuel into the throttle body or attempt to start the engine with the air cleaner removed. Doing so could result in serious injury.**

IN-CABIN MICROFILTER (if so equipped)

The in-cabin microfilter restricts the entry of airborne dust and pollen particles and reduces some objectionable outside odors. The filter is located behind the glove box. Refer to the "NISSAN Service and Maintenance Guide" for change intervals.

To change the filter, perform the following procedure:

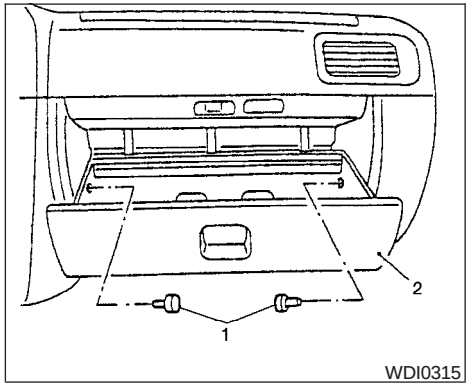

1. Pivot pins
2. Glove box

1. Remove the two pivot pins from the glove box. Remove the glove box.

CAUTION

Do not disturb the front of the air bag module.

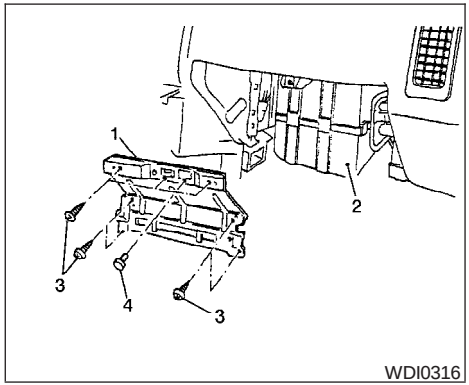

1. Reinforcement panel
2. Cooling unit
3. Screws
4. Clip

2. Remove the 7 screws and 1 clip from the glove box frame. Remove the glove box frame.

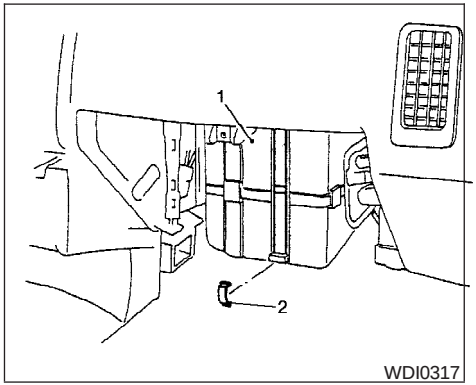

1. Cooling unit
2. Clip

3. Remove the clip securing the filters in the intake unit.

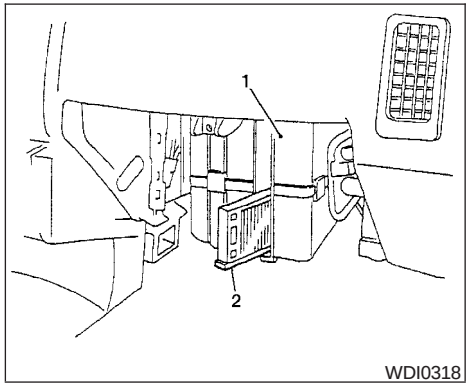

1. Cooling unit
2. Filter

4. Remove the filters.

NOTE:

The filters must be aligned with the plastic hook at the bottom.

5. Insert the first filter in the bottom position. Slide it up to the top position and insert the second filter in the bottom position.
6. Secure the filter with the clip.
7. Install the glove box frame.
8. Install the glove box.

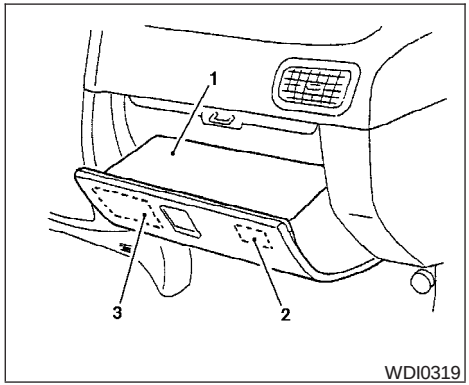

1. Glove box
2. Label (small)
3. Label (large)

9. Fill out the date information on the small label. Attach the small and large labels to the glove box lid.

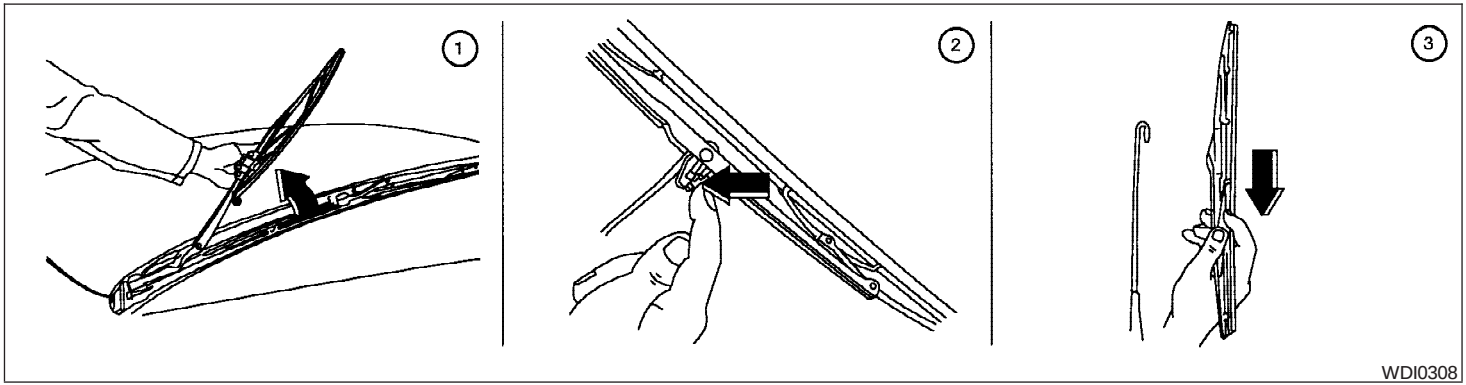

CLEANING

If your windshield is not clear after using the windshield washer or if a wiper blade chatters when running, wax or other material may be on the blade or windshield.

Clean the outside of the windshield with a washer solution or a mild detergent. Your windshield is clean if beads do not form when rinsing with clear water.

Clean each blade by wiping it with a cloth soaked in a washer solution or a mild detergent. Then rinse the blades with clear water. If your windshield is still not clear after cleaning the blades and using the wiper, replace the blades.

⚠ CAUTION

Worn windshield wiper blades can damage the windshield and impair driver vision.

REPLACING

Replace the wiper blades if they are worn.

① Lift the wiper arm away from the windshield.

② Push the release tab, then move the wiper blade down the wiper arm to remove.

③ Remove the wiper blade.

4. Insert the new wiper blade onto the wiper arm until it clicks into place.

⚠ CAUTION

- **After wiper blade replacement, return the wiper arm to its original position; otherwise it may be damaged when the hood is opened.**
- **Make sure the wiper blades contact the glass; otherwise the arms may be damaged from wind pressure.**

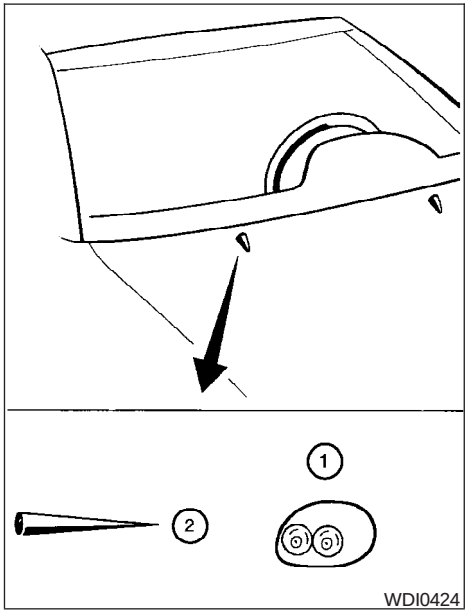

If you wax the surface of the hood, be careful not to let wax get into the washer nozzle ①. This may cause clogging or improper windshield washer operation. If wax gets into the nozzle, remove it with a needle or small pin ②.

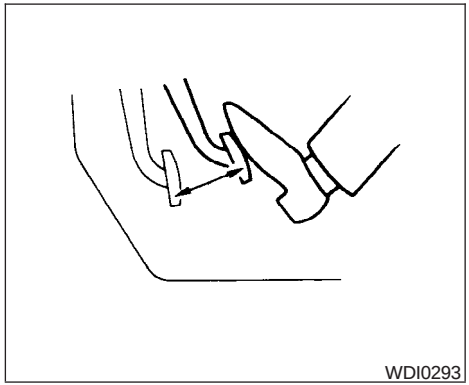

CHECKING PARKING BRAKE

From the released position, firmly push the parking brake down. If the number of clicks is out of the range listed, see a NISSAN dealer.

- 6–7 clicks under depressing force of 44 lb (196 N).

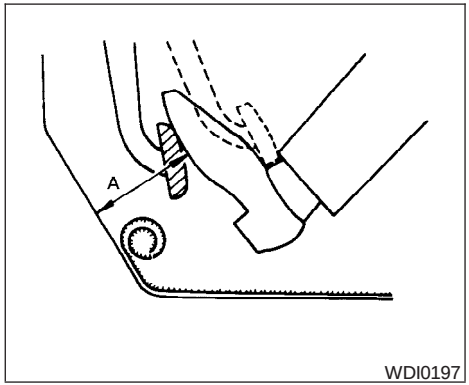

CHECKING BRAKE PEDAL

With the engine running, check the distance **A** between the upper surface of the pedal and the metal floor. If it is out of the range shown, see a NISSAN dealer.

Distance A: Under depressing force of 110 lb (490 N)

Automatic Transmission	Manual Transmission
4 1/4 in (110 mm)	4 in (100 mm)

Self-adjusting brakes

Your vehicle is equipped with self-adjusting brakes.

The front disc-type brakes self-adjust every time the brake pedal is applied. The rear drum-type brakes on two-wheel drive vehicles self-adjust every time the parking brake is applied. The rear drum-type brakes on four-wheel drive vehicles self-adjust every time the brake pedal is applied. If the brake pedal goes down farther than normal, it may be due to lack of adjustment of the rear drum brakes. Apply the parking brake several times.

⚠ WARNING

If the brake pedal height does not return to normal, see a NISSAN dealer and have it checked.

Brake pad wear indicators

The disc brake pads on your vehicle have audible wear indicators. When a brake pad requires replacement, a high pitched scraping or screeching sound will be heard when the vehicle is in motion. The noise will be heard whether or not the brake pedal is depressed. Have the brakes checked as soon as possible if the wear indicator sound is heard.

Under some driving or climate conditions, occasional brake squeak, squeal or other noise may be heard. Occasional brake noise during light to moderate stops is normal and does not affect the function or performance of the brake system.

The rear drum brakes (if so equipped) do not have audible wear indicators. Should you ever hear an unusually loud noise from the rear drum brakes, have them inspected as soon as possible by a NISSAN dealer.

Proper brake inspection intervals should be followed. For more information regarding brake inspections, see the appropriate maintenance schedule information in the “NISSAN Service and Maintenance Guide”.

BRAKE BOOSTER

Check the brake booster function as follows:

1. With the engine off, press and release the brake pedal several times. When brake pedal movement (distance of travel) remains the same from one pedal application to the next, continue on to the next step.
2. While depressing the brake pedal, start the engine. The pedal height should drop a little.
3. With the brake pedal depressed, stop the engine. Keep the pedal depressed for about 30 seconds. The pedal height should not change.
4. Run the engine for one minute without depressing the brake pedal, then turn it off. Depress the brake pedal several times. The pedal travel distance will decrease gradually with each depression as the vacuum is released from the booster.

If the brakes do not operate properly, have the brakes checked by a NISSAN dealer.

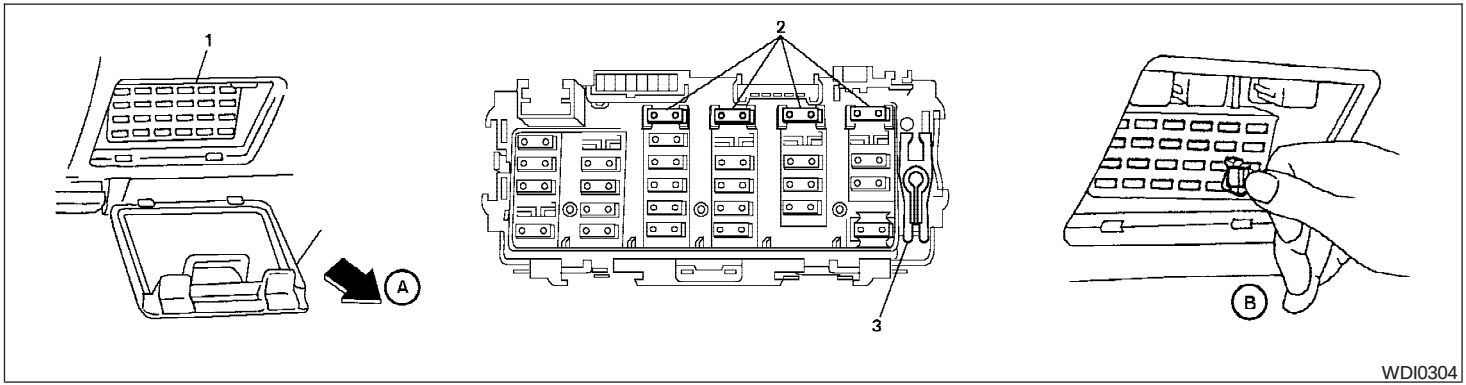

1. Fuse box
2. Spare fuses
3. Fuse puller

PASSENGER COMPARTMENT

⚠ CAUTION

Never use a fuse of a higher or lower amperage rating than specified on the fuse box cover. This could damage the electrical system or cause a fire.

If any electrical equipment does not operate, check for an open fuse.

1. Be sure the ignition switch and the headlight switch are OFF.
2. Pull the fuse box cover to remove Ⓐ.
3. Remove the fuse with the fuse puller Ⓑ.

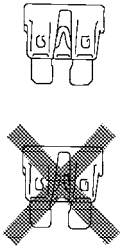

WDI0200

4. If the fuse is open, replace it with a known good fuse.
5. Push the fuse box cover to install.
6. If a new fuse also opens, have the electrical system checked and repaired by a NISSAN dealer.

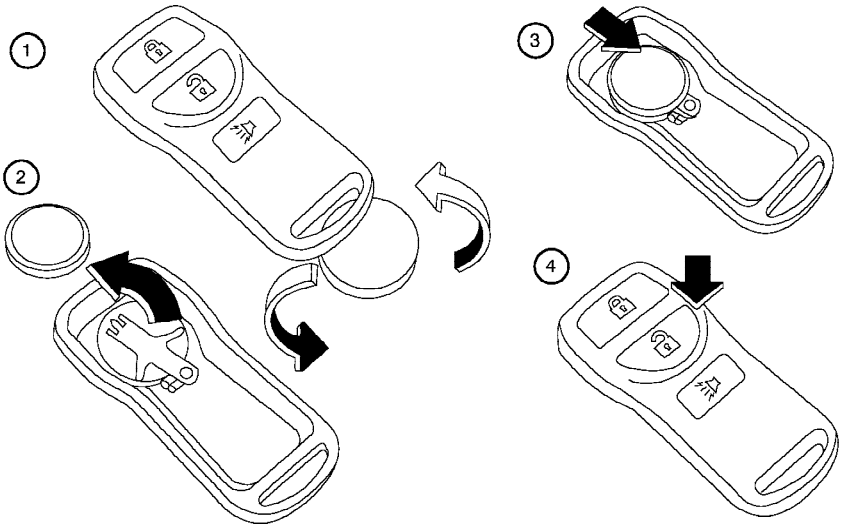

WPD0160

Replace the battery in the keyfob as follows:

① Open the lid using a coin.

② Remove the battery.

③ Install a new battery with the “+” facing down.

Recommended battery: Toshiba CR2025 or equivalent.

④ Close the lid securely.

5. Press the button, then the button two or three times to check the keyfob operation.

If the battery is removed for any reason other than replacement, perform step 5.

- **An improperly disposed battery can hurt the environment. Always confirm local regulations for battery disposal.**
- **The keyfob is water-resistant; however, if it does get wet, immediately wipe completely dry.**
- **The operational range of the keyfob extends to approximately 33 ft (10 m) from the vehicle. This range may vary with conditions.**

FCC Notice:
Changes or modifications not expressly approved by the manufacturer for compliance could void the user's authority to operate the equipment.

This device complies with Part 15 of the FCC Rules and RSS-210 of Industry Canada.

Operation is subject to the following two conditions: (1) This device may not cause harmful interference, and (2) this device must accept any interference received, including interference that may cause undesired operation of the device.

HEADLIGHTS

The headlight is a semi-sealed beam type which uses a replaceable headlight (halogen) bulb. A bulb can be replaced from inside the engine compartment without removing the headlight assembly.

CAUTION

- **High pressure halogen gas is sealed inside the halogen bulb. The bulb may break if the glass envelope is scratched or the bulb is dropped.**
- **When handling the bulb, do not touch the glass envelope.**
- **DO NOT TOUCH THE BULB**
- **Use the same number and wattage as originally installed:**

  Wattage 65/55Bulb No. HB5/9007*

  ***: Always check with the Parts Department at a NISSAN dealer for the latest parts information.**
- **Do not leave the bulb out of the headlight reflector for a long period of time as dust, moisture and smoke may enter the headlight body and affect the performance of the headlight.**
- **Aiming is not necessary after replacing the bulb. When aiming adjustment is necessary, contact a NISSAN dealer.**

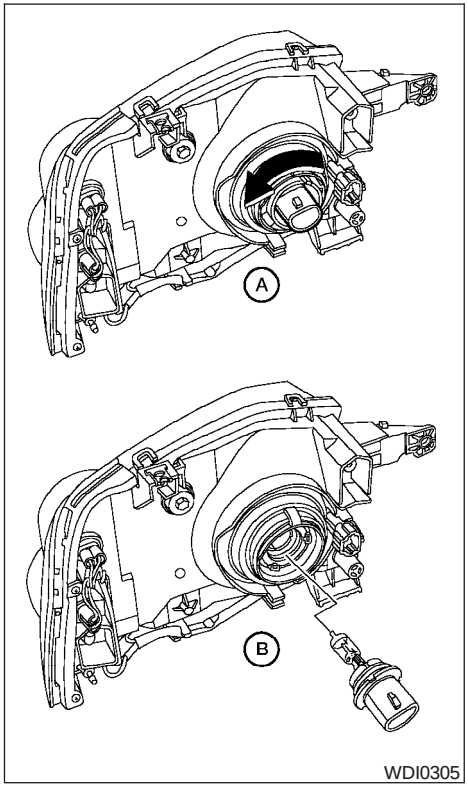

Removing the headlight bulb

1. Open the hood.
2. Disconnect the negative (-) battery cable.
3. Disconnect the electrical connector from the rear end of the bulb.
4. Turn the bulb retaining ring counterclockwise until it is free form the headlight reflector and then remove it Ⓐ.
5. Carefully remove the headlight bulb. Do not shake or rotate the bulb when removing it Ⓑ.

Replacing the headlight bulb

1. Insert the bulb.

   DO NOT TOUCH THE BULB.
2. Install and tighten the bulb retainer.
   - Be sure the lip of the bulb socket contacts the headlight body.
3. Push the electrical connector into the bulb plastic base until it snaps and stops.
4. Connect the negative (-) battery cable.
5. Close the hood.

Adjusting the headlight aim

If the headlights need aiming adjustment, please see a NISSAN dealer.

FOG LIGHTS (if so equipped)

Replacing the fog light bulb

⚠ CAUTION

- **High pressure halogen gas is sealed inside the halogen bulb. The bulb may break if the glass envelope is scratched or the bulb is dropped.**
- **When handling the bulb, do not touch the glass envelope.**

1. Disconnect the negative (-) battery cable.

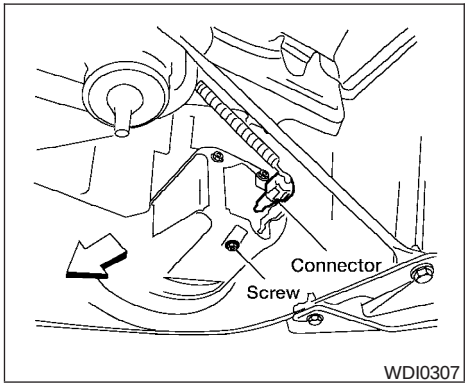

2. Disconnect bulb connector.
3. Rotate the bulb cover counterclockwise and remove.
4. Remove by pulling it straight out of the fog light assembly. Do not shake or rotate the bulb when removing it. Do not touch the glass envelope.
5. Install in the reverse order of removal.

EXTERIOR AND INTERIOR LIGHTS

Item	Wattage (W)	Bulb No.*
Front combination light		
Headlight	65/55	9007 (HB5)
Turn signal light	28.5	3456k
Parking light side front	5	168
Side marker	5	168
Rear combination light		
Turn signal	27	3157NAK
Stop/Tail	27/7	3157k
Back-up	27	3156k
License plate light	3.8	194
Fog light	37.5	899
Dome light type A	8	83
Dome light type B	8	—
Cargo light	10	—
Map light	5	168
High-mounted stop light	See a NISSAN dealer for assistance.	

* Always check with the Parts Department at a NISSAN dealer for the latest parts information.

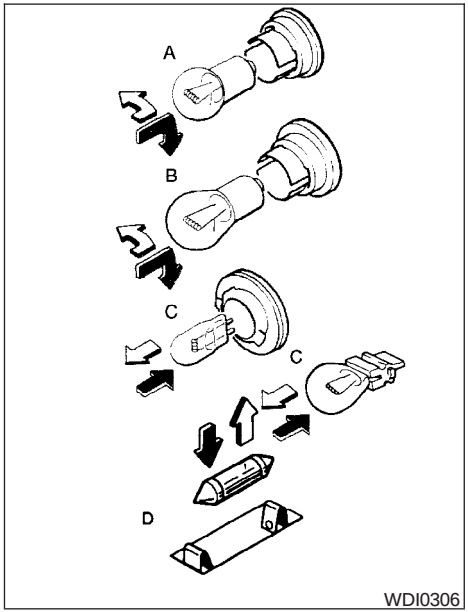

Replacement procedures

All other lights are either type A, B, C or D. When replacing a bulb, first remove the lens and/or cover.

⇧ : Indicates bulb removal

⬆ : Indicates bulb installation

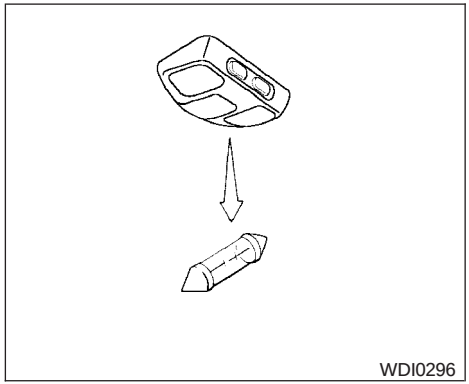

Map light

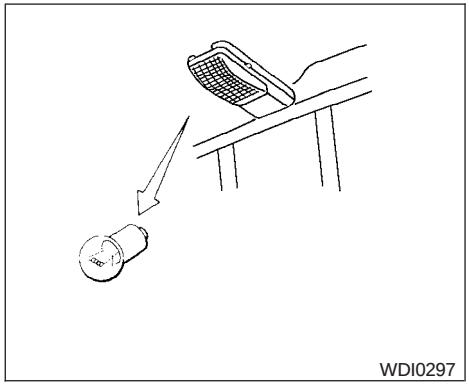

Dome and cargo light

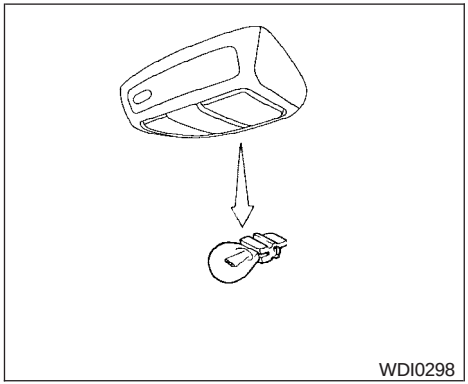

Map/compass light

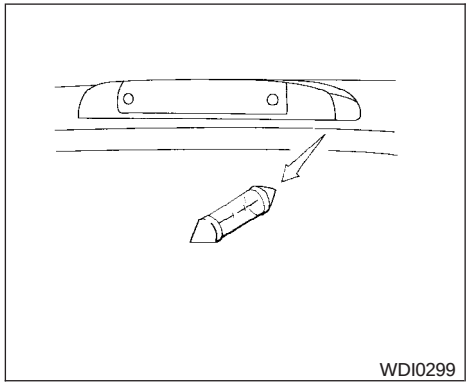

Cargo light - Crew Cab

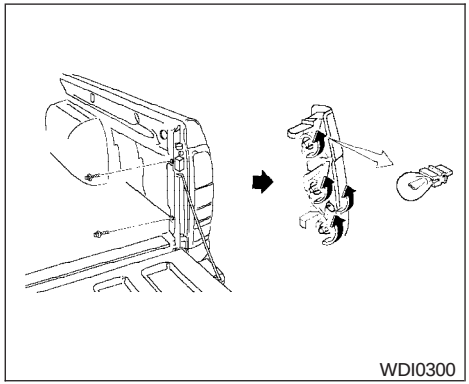

Rear combination light

See a NISSAN dealer for assistance.

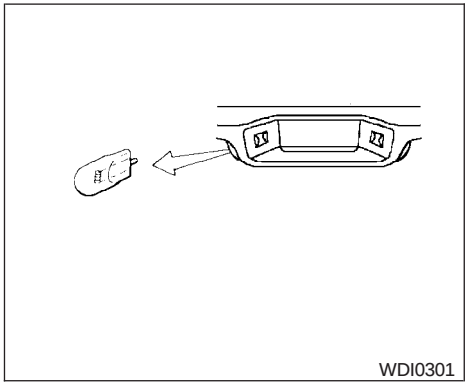

License plate light

If you have a flat tire, see the "In case of emergency" section of this manual.

TIRE PRESSURE

Tire inflation pressure

Check the tire pressures (including the spare) often and always prior to long distance trips. The recommended tire pressure specifications are shown on the Tire and Loading Information label (this label is also known as the tire placard) under the "Recommended Cold Tire Inflation Pressure" heading. The Tire and Loading Information label is affixed to the driver side center pillar. Tire pressures should be checked regularly because:

- Most tires naturally lose air over time.
- Tires can lose air suddenly when driven over potholes or other objects or if the vehicle strikes a curb while parking.

The tire pressures should be checked when the tires are cold. The tires are considered COLD after the vehicle has been parked for 3 or more hours, or driven less than 1 mile (1.6 km) at moderate speeds.

Incorrect tire pressure, including under inflation, may adversely affect tire life and vehicle handling.

⚠ WARNING

- **Improperly inflated tires can fail suddenly and cause an accident.**
- **The vehicle weight capacity is indicated on the Tire and Loading Information label. Do not load your vehicle beyond this capacity. Overloading your vehicle may result in reduced tire life, unsafe operating conditions due to premature tire failure, or unfavorable handling characteristics and could also lead to a serious accident. Loading beyond the specified capacity may also result in failure of other vehicle components.**
- **Before taking a long trip, or whenever you heavily load your vehicle, use a tire pressure gauge to ensure that the tire pressures are at the specified level.**
- **Do not drive your vehicle over 85 MPH (137 km/h) unless it is equipped with high speed rated tires. Driving faster than 85 MPH (137 km/h) may result in tire failure, loss of control and possible injury.**
- **For additional information regarding tires, refer to "Important Tire Safety Information" (US) or "Tire Safety Information" (Canada) in the Warranty Information Booklet.**

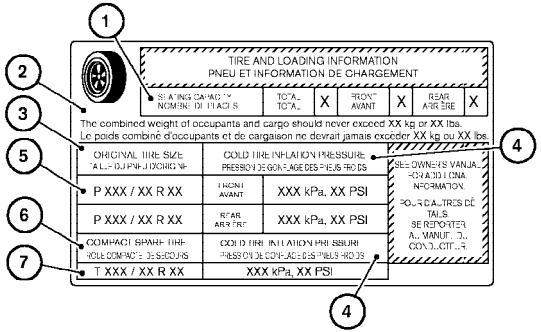

Type a

Tire and loading information label (for US)

① Seating capacity: The maximum number of occupants that should be seated in the vehicle.

② Vehicle load limit: See loading information in the Technical and consumer information section.

③ Original tire size: The size of the tires originally installed on the vehicle at the factory.

④ Recommended cold tire inflation pressure: Inflate the tires to this pressure when the tires are cold. Tires are considered COLD after the vehicle has been parked for 3 or more hours, or driven less than 1 mile (1.6 km) at moderate speeds. The recommended cold tire inflation is set by the manufacturer to provide the best tire wear and vehicle handling characteristics based on the vehicles GVWR.

⑤ Tire size – refer to “Tire labeling” later in this section.

⑥ and ⑦ Spare tire size or compact spare tire size (if so equipped).

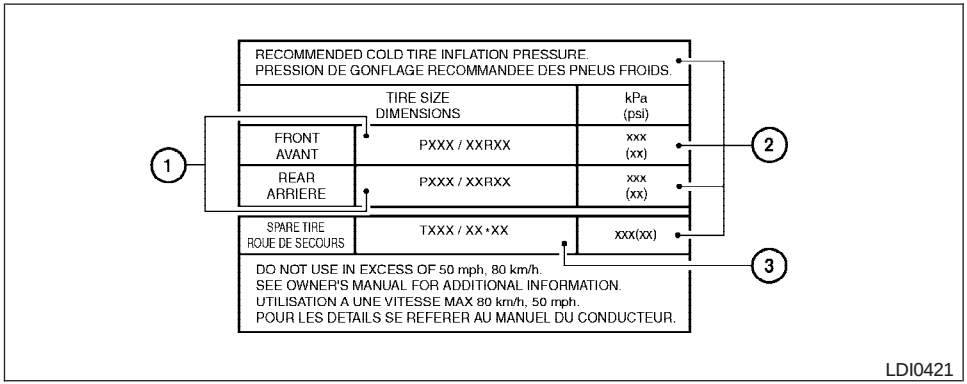

Type b

Tire and loading information label (for US)

① Original tire size: The size of the tires originally installed on the vehicle at the factory.

② Recommended cold tire inflation pressure: Inflate the tires to this pressure when the tires are cold. Tires are considered COLD after the vehicle has been parked for 3 or more hours, or driven less than 1 mile (1.6 km) at moderate speeds. The recommended cold tire inflation is set by the manufacturer to provide the best tire wear and vehicle handling characteristics based on the vehicles GVWR.

③ Spare tire size or compact spare tire size (if so equipped).

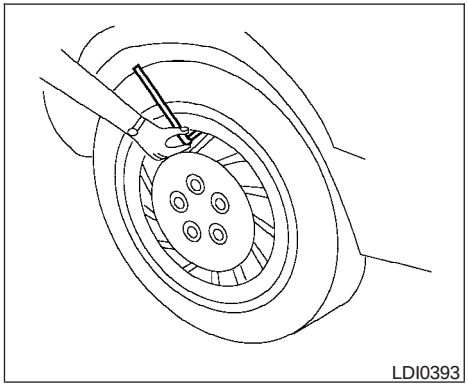

Checking tire pressure

1. Remove the valve stem cap from the tire.
2. Press the pressure gauge squarely onto the valve stem. Do not press too hard or force the valve stem sideways, or air will escape. If the hissing of air escaping from the tire is heard while checking the pressure, reposition the gauge to eliminate this leakage.
3. Remove the gauge.
4. Read the tire pressure on the gauge stem and compare to the specification shown on the Tire and Loading Information label.
5. Add air to the tire as needed. If too much air is added, press the core of the valve stem briefly with the tip of the gauge stem to release pressure. Recheck the pressure and add or release air as needed.
6. Install the valve stem cap.
7. Check the pressure of all other tires, including the spare.

	Size	Cold Tire Inflation Pressure
Front Original Tire	P255/65R16 P265/70R15 P265/70R16 P265/65R17	240 kPa, 35 PSI
	P265/55R17 P225/70R15	210 kPa, 30 PSI
Rear Original Tire	P255/65R16 P265/70R15 P265/70R16 P265/65R17	240 kPa, 35 PSI
	P265/55R17 P225/70R15	210 kPa, 30 PSI
Spare Tire	T135/90 R or D16	420 kPa, 60 PSI

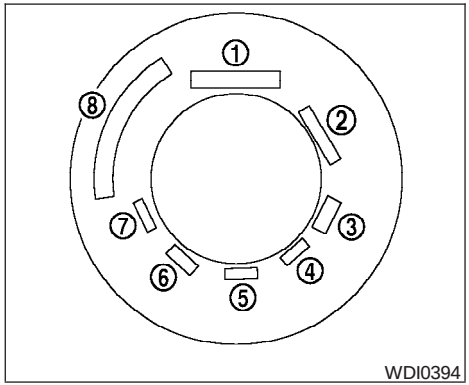

TIRE LABELING

Federal law requires tire manufacturers to place standardized information on the sidewall of all tires. This information identifies and describes the fundamental characteristics of the tire and also provides the tire identification number (TIN) for safety standard certification. The TIN can be used to identify the tire in case of a recall.

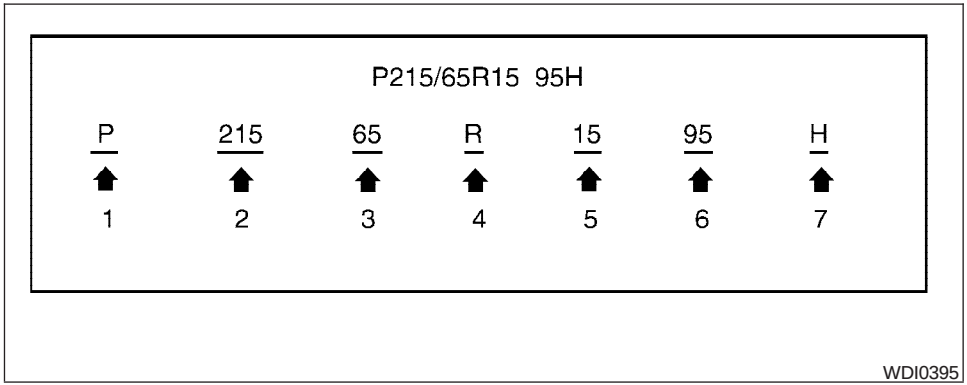

① Tire size (example: P215/65R15 95H)

1. P: The ″P″ indicates the tire is designed for passenger vehicles.
2. Three-digit number: This number gives the width in millimeters of the tire from sidewall edge to sidewall edge.
3. Two-digit number: This number, known as the aspect ratio, gives the tire's ratio of height to width.
4. R: The ″R″ stands for radial.
5. Two-digit number: This number is the wheel or rim diameter in inches.
6. Two- or three-digit number: This number is the tire's load index. It is a measurement of how much weight each tire can support. You may not find this information on all tires because it is not required by law.
7. Tire speed rating. You should not drive the vehicle faster than the tire speed rating.

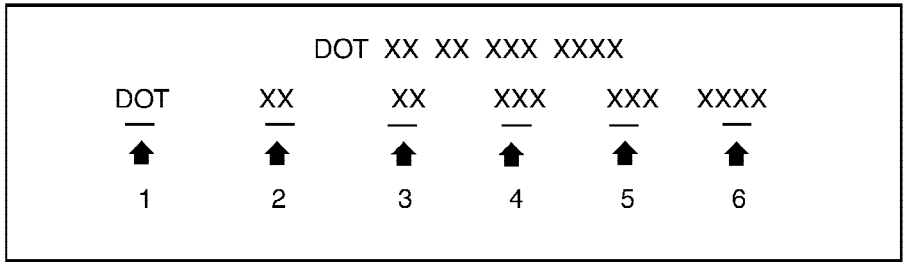

WDI0396

② TIN (Tire Identification Number) for a new tire (example: DOT XX XX XXX XXXX)

1. DOT: Abbreviation for the "Department Of Transportation." The symbol can be placed above, below or to the left or right of Tire Identification Number.
2. Two-digit code: Manufacturer's identification mark
3. Two-digit code: Tire size
4. Three-digit code: Tire type code (Optional)
5. Three-digit code: Date of Manufacture
6. Four numbers represent the week and year the tire was built. For example, the numbers 3103 means the 31st week of 2003. If these numbers are missing, then look on the other sidewall of the tire.

③ Tire ply composition and material

The number of layers or plies of rubber-coated fabric in the tire. Tire manufacturers also must indicate the materials in the tire, which include steel, nylon, polyester, and others.

④ Maximum permissible inflation pressure

This number is the greatest amount of air pressure that should be put in the tire. Do not exceed the maximum permissible inflation pressure.

⑤ Maximum load rating

This number indicates the maximum load in kilograms and pounds that can be carried by the tire. When replacing the tires on the vehicle, always use a tire that has the same load rating as the factory installed tire.

⑥ Term of "tubeless" or "tube type"

Indicates whether the tire requires an inner tube ("tube type") or not ("tubeless").

⑦ The word "radial"

The word "radial" is shown if the tire has radial structure.

⑧ Manufacturer or brand name

Manufacturer or brand name is shown.

Other Tire-related Terminology

In addition to the many terms that are defined throughout this section, Intended Outboard Sidewall is (1) the sidewall that contains a whitewall, bears white lettering or bears manufacturer, brand, and/or model name molding that is higher or deeper than the same molding on the other sidewall of the tire, or (2) the outward facing sidewall of an asymmetrical tire that has a particular side that must always face outward when mounted on a vehicle.

TYPES OF TIRES

⚠ WARNING

- **When changing or replacing tires, be sure all four tires are of the same type (i.e., Summer, All Season or Snow) and construction. A NISSAN dealer may be able to help you with information about tire type, size, speed rating and availability.**
- **Replacement tires may have a lower speed rating than the factory equipped tires, and may not match the potential maximum vehicle speed. Never exceed the maximum speed rating of the tire.**
- **For additional information regarding tires, refer to "Important Tire Safety Information" (US) or "Tire Safety Information" (Canada) in the Warranty Information Booklet.**

All season tires

NISSAN specifies All Season tires on some models to provide good performance all year, including snowy and icy road conditions. All Season tires are identified by ALL SEASON and/or M&S on the tire sidewall. Snow tires have better snow traction than All Season tires and may be more appropriate in some areas.

Summer tires

NISSAN specifies summer tires on some models to provide superior performance on dry roads. Summer tire performance is substantially reduced in snow and ice. Summer tires do not have the tire traction rating "M&S" on the tire sidewall.

If you plan to operate your vehicle in snowy or icy conditions, NISSAN recommends the use of SNOW tires or ALL SEASON tires on all four wheels.

Snow tires

If snow tires are needed, it is necessary to select tires equivalent in size and load rating to the original equipment tires. If you do not, it can adversely affect the safety and handling of your vehicle.

Generally, snow tires have lower speed ratings than factory equipped tires and may not match the potential maximum vehicle speed. Never exceed the maximum speed rating of the tire.

If you install snow tires, they must be the same size, brand, construction and tread pattern on all four wheels.

For additional traction on icy roads, studded tires may be used. However, some U.S. states and Canadian provinces prohibit their use. Check local, state and provincial laws before installing studded tires. Skid and traction capabilities of studded snow tires on wet or dry surfaces may be poorer than that of non-studded snow tires.

TIRE CHAINS

Use of tire chains may be prohibited according to location. Check the local laws before installing tire chains. When installing tire chains, make sure they are the proper size for the tires on your vehicle and are installed according to the chain manufacturer's suggestions. **Use only SAE class "S" chains.** Class "S" chains are used on vehicles with restricted tire to vehicle clearance. Vehicles that can use Class "S" chains are designed to meet the minimum clearances between the tire and the closest vehicle suspension or body component required to accommodate the use of a winter traction device (tire chains or cables). The minimum clearances are determined using the factory equipped tire size. Other types may damage your vehicle. Use chain tensioners when recommended by the tire chain manufacturer to ensure a tight fit. Loose end links of the tire chain must be secured or removed to prevent the possibility of whipping action damage to the fenders or underbody. If possible, avoid fully loading your vehicle when using tire chains. In addition, drive at a reduced speed. Otherwise, your vehicle may be damaged and/or vehicle handling and performance may be adversely affected.

Tire chains must be installed only on the rear wheels and not on the front wheels.

Never install tire chains on a TEMPORARY USE ONLY spare tire.

Do not use tire chains on dry roads. Driving with chains in such conditions can cause damage to the various mechanisms of the vehicle due to some overstress.

Use only the 2WD range when driving on clear paved roads.

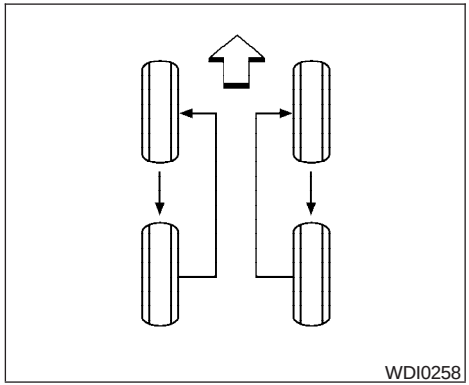

CHANGING WHEELS AND TIRES

Tire rotation

NISSAN recommends rotating the tires every 7,500 miles (12,000 km).

See “Flat tire” in the “In case of emergency” section in this manual for tire replacing procedures.

As soon as possible, tighten the wheel nuts to the specified torque with a torque wrench.

Wheel nut tightening torque:

98 ft-lb (133 N·m)

The wheel nuts must be kept tightened to specifications at all times. It is recommended that wheel nuts be tightened to specification at each tire rotation interval.

⚠ WARNING

- **After rotating the tires, check and adjust the tire pressure.**
- **Retighten the wheel nuts when the vehicle has been driven for 600 miles (1,000 km) (also in cases of a flat tire, etc.).**
- **Do not include the spare tire in the tire rotation.**
- **For additional information regarding tires, refer to “Important Tire Safety Information” (US) or “Tire Safety Information” (Canada) in the Warranty Information Booklet.**

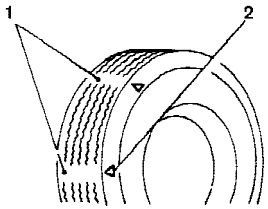

WDI0259

1. Wear indicator
2. Location mark

Tire wear and damage

⚠WARNING

- **Tires should be periodically inspected for wear, cracking, bulging or objects caught in the tread. If excessive wear, cracks, bulging or deep cuts are found, the tire(s) should be replaced.**
- **The original tires have built-in tread wear indicators. When the wear indicators are visible, the tire(s) should be replaced.**
- **Improper service of the spare tire may result in serious personal injury. If it is necessary to repair the spare tire, contact a NISSAN dealer.**
- **For additional information regarding tires, refer to "Important Tire Safety Information" (US) or "Tire Safety Information" (Canada) in the Warranty Information Booklet.**

Replacing wheels and tires

When replacing a tire, use the same size, tread design, speed rating and load carrying capacity as originally equipped. Recommended types and sizes are shown in "Wheels and tires" in the "Technical and consumer information" section of this manual.

⚠WARNING

- **The use of tires other than those recommended or the mixed use of tires of different brands, construction (bias, bias-belted or radial), or tread patterns can adversely affect the ride, braking, handling, ground clearance, body-to-tire clearance, tire chain clearance, speedometer calibration, headlight aim and bumper height. Some of these effects may lead to accidents and could result in serious personal injury.**
- **If the wheels are changed for any reason, always replace with wheels which have the same off-set dimension. Wheels of a different off-set could cause premature tire wear, degrade vehicle handling characteristics and/or interference with the brake discs/drums. Such interference can lead to decreased braking efficiency and/or early brake pad/shoe wear. Refer to "Wheels and tires" in the "Technical and consumer information" section of this manual for wheel off-set dimensions.**

- **When a spare tire is mounted or a wheel is replaced, the low tire pressure warning system will not function. Contact your NISSAN dealer as soon as possible for tire replacement and/or system resetting (for models with the low tire pressure warning system).**
- **Do not install a deformed wheel or tire even if it has been repaired. Such wheels or tires could have structural damage and could fail without warning.**
- **The use of retread tires is not recommended.**
- **For additional information regarding tires, refer to "Important Tire Safety Information" (US) or "Tire Safety Information" (Canada) in the Warranty Information Booklet.**

4x4 Four-wheel drive models

CAUTION

Always use tires of the same type, size, brand, construction (bias, bias-belted or radial), and tread pattern on all four wheels. Failure to do so may result in a circumference difference between tires on the front and rear axles which will cause excessive tire wear and may damage the transmission, transfer case and differential gears.

If excessive tire wear is found, it is recommended that all four tires be replaced with tires of the same size, brand, construction and tread pattern. The tire pressure and wheel alignment should also be checked and corrected as necessary. Contact a NISSAN dealer.

Wheel balance

Unbalanced wheels may affect vehicle handling and tire life. Even with regular use, wheels can get out of balance. Therefore, they should be balanced as required.

Wheel balance service should be performed with the wheels off the vehicle. Spin balancing the wheels on the vehicle could lead to mechanical damage.

- **For additional information regarding tires, refer to "Important Tire Safety Information" (US) or "Tire Safety Information" (Canada) in the Warranty Information Booklet .**

Care of wheels

- Wash the wheels when washing the vehicle to maintain their appearance.
- Clean the inner side of the wheels when the wheel is changed or the underside of the vehicle is washed.
- Do not use abrasive cleaners when washing the wheels.
- Inspect wheel rims regularly for dents or corrosion. Such damage may cause loss of pressure or poor seal at the tire bead.
- NISSAN recommends waxing the road wheels to protect against road salt in areas where it is used during winter.

Spare tire (TEMPORARY USE ONLY spare tire)

Your vehicle may be equipped with a TEMPORARY SPARE USE ONLY spare tire.

Observe the following precautions if the TEMPORARY USE ONLY spare tire must be used, Otherwise, your vehicle could be damaged or involved in an accident:

⚠ WARNING

- **The spare tire should be used for emergency use only. It should be replaced with the standard tire at the first opportunity to avoid possible tire or differential damage.**
- **Drive carefully while the TEMPORARY USE ONLY spare tire is installed. Avoid sharp turns and abrupt braking while driving.**
- **Periodically check spare tire inflation pressure. Always keep the pressure of the TEMPORARY USE ONLY spare tire at 60 psi (420 kPa, 4.2 bar).**
- **With the TEMPORARY USE ONLY spare tire installed do not drive the vehicle at speeds faster than 50 MPH (80 km/h).**
- **When driving on roads covered with snow or ice, the TEMPORARY USE ONLY spare tire should be used on the front wheels and the original tire used on the rear wheels (drive wheels). Use tire chains only on the two rear original tires.**
- **Tire tread of the TEMPORARY USE ONLY spare tire will wear at a faster rate than the standard tire. Replace the spare tire as soon as the tread wear indicators appear.**
- **Do not use the spare tire on other vehicles.**
- **Do not use more than one spare tire at the same time.**
- **Do not tow a trailer when the TEMPORARY USE ONLY spare tire is installed.**

⚠ CAUTION

- **4×4 With the spare tire installed the transfer control lever must be in the 2H position to prevent the transfer case and differential gears from being damaged.**
- **Do not use tire chains on a TEMPORARY USE ONLY spare tire. Tire chains will not fit properly and may cause damage to the vehicle.**
- **Because the TEMPORARY USE ONLY spare tire is smaller than the original tire, ground clearance is reduced. To avoid damage to the vehicle, do not drive over obstacles. Also, do not drive the vehicle through an automatic car wash since it may get caught.**

MEMO

9 Technical and consumer information

Capacities and recommended fuel/lubricants 9-2
Fuel recommendation 9-3
Engine oil and oil filter recommendation 9-5
Recommended SAE viscosity number 9-6
Air conditioner system refrigerant and lubricant recommendations 9-6
Specifications 9-7
Engine 9-7
Wheels and tires 9-8
Dimensions and weights 9-9
When traveling or registering your vehicle in another country 9-10
Vehicle identification 9-10
Vehicle identification number (VIN) plate 9-10
Vehicle identification number (chassis number) 9-10
Engine serial number 9-11
F.M.V.S.S. certification label 9-11
Emission control information label 9-12
Tire placard 9-12
Air conditioner specification label 9-12
Installing front license plate 9-13
Vehicle loading information 9-13
Terms 9-13
Determining vehicle load capacity 9-14
Securing the load 9-14
Loading tips 9-14
Truck-camper loading information 9-15
Crew Cab Models 9-15
King Cab models 9-15
Special Body vehicles 9-15
Location for center of gravity 9-15
Vehicle load weight capacity 9-16
Measurement of weights 9-18
Towing a trailer 9-18
Maximum load limits 9-18
Towing load/specification chart 9-20
Towing safety 9-21
Flat towing 9-23
Uniform tire quality grading 9-24
Emission control system warranty 9-25
Reporting safety defects (US only) 9-25
Readiness for inspection/maintenance (I/M) test 9-25
Dynamometer testing for Inspection/Maintenance (I/M) test (US only) 9-26
Event data recorders 9-26
Owner's Manual/Service Manual order information . . . 9-27
In the event of a collision 9-28

CAPACITIES AND RECOMMENDED FUEL/LUBRICANTS

The following are approximate capacities. The actual refill capacities may be a little different. When refilling, follow the procedure described in the "Maintenance and do-it-yourself" section to determine the proper refill capacity.

				Capacity (Approximate)			Recommended Fluids and Lubricants
				US measure	Imp measure	Liter	
Fuel							
KA24DE (4 cylinder)				15–7/8 gal	13–1/4 gal	60.2	Unleaded gasoline with an octane rating of at least 87 AKI (RON 91)*1
VG33E (6 cylinder)				19–3/8 gal	16–1/8 gal	73.5	
VG33ER (6 cylinder with supercharger)				19–3/8 gal	16–1/8 gal	73.5	Unleaded gasoline with an octane rating of at least 91 AKI (RON 96)*1
Engine oil							
Drain and Refill							
	KA24DE	With oil filter		3–3/4 qt	3–1/8 qt	3.5	▪ API Certification Mark *2 ▪ API grade SG/SH, Energy conserving I & II or API grade SJ or SL, Energy Conserving *2 ▪ ILSAC grade GF-I, GF-II & GF-III
		Without oil filter		3–1/2 qt	2–7/8 qt	3.3	
	VG33E/VG33ER	With oil filter		3–1/2 qt	2–7/8 qt	3.3	
		Without oil filter		3–1/8 qt	2–5/8 qt	3.0	
Cooling system (with heater and reservoir tank)							
	KA24DE	M/T	4X2	7–3/4 qt	6–3/8 qt	7.3	50% Genuine NISSAN Long Life Anti-freeze Coolant or equivalent 50% Demineralized or distilled water
	VG33E/VG33ER	A/T & M/T		11–5/8 qt	9–5/8 qt	10.95	
Manual transmission gear oil							
	KA24DE	4X2		4–1/4 pt	3–1/2 pt	2.0	
	VG33E/VG33ER	4X2		5–7/8 pt	4–7/8 pt	2.8	Genuine NISSAN Manual Transmission Fluid HQ Multi 75W-85 or equivalent
		4X4		10–3/4 pt	9 pt	5.1	
Final drive gear oil							
	KA24DE	4X2	M/T	2–3/4 pt	2–1/4 pt	1.3	
	VG33E/VG33ER	4X4	Front	3–3/4 pt	3–1/8 pt	1.75	API GL-5, Viscosity SAE 80W-90*1 or 80W-90 LS*1for Limited Slip Differential (LSD) applications*2
			Rear	5–7/8 pt	4–7/8 pt	2.8	
Transfer fluid				2–3/8 qt	2 qt	2.2	API GL-4, Viscosity SAE 75W-85 or 75W-90 or Genuine Nissan Matic D ATF (Continental U.S. and Alaska) or Canada NISSAN Automatic Transmission Fluid.*3
Automatic transmission fluid				Refill to the proper level according to the instructions in the "Maintenance and do-it-yourself" section.			Genuine Nissan Matic D ATF (Continental U.S. and Alaska) or Canada NISSAN Automatic Transmission Fluid.*3
Power steering fluid (PSF)							Genuine NISSAN PSF or equivalent.*6
Brake and clutch fluid							Genuine NISSAN Super Heavy Duty Brake Fluid*4 or equivalent Dot 3 (US FMVSS No. 116)
Multi-purpose grease				—	—	—	NLGI No. 2 (Lithium Complex)
Air conditioning system refrigerant			lb (kg)	1.32 – 1.54 (0.60 – 0.70)			HFC-134a (R-134a)*5
Air conditioning system lubricant				6.8 oz	7.0 oz	200 ml	NISSAN A/C System Oil Type R or equivalent*5
Windshield washer fluid				—	—	—	Genuine NISSAN Windshield Washer Concentrate Cleaner & Anti-freeze or equivalent

*1: For hot climates, viscosity SAE 90 is suitable for ambient temperatures above 0° C (32° F).
*2: Contact your NISSAN dealer for a list of approved oils.
*3: DEXRON™ III/MERCON™ or equivalent may also be used. Outside the Continental United States and Alaska contact an authorized NISSAN dealership for more information regarding suitable fluids, including recommended brand(s) of DEXRON™ III/MERCON™ Automatic Transmission Fluid.
*4: Available in mainland USA through your authorized NISSAN dealer.
*5: For further details, see "Air conditioner specification label."
*6: For Canada, NISSAN Automatic Transmission Fluid (ATF), DEXRON™ III/MERCON™, or equivalent ATF may also be used.

FUEL RECOMMENDATION

For 2.4L/3.3L engine

Use unleaded regular gasoline with an octane rating of at least 87 AKI (Anti-Knock Index) number (Research octane number 91).

For 3.3L supercharger

Use unleaded premium gasoline with an octane rating of at least 91 AKI number (Research octane number 96).

If unleaded premium gasoline is not available, unleaded regular gasoline with an octane rating of at least 87 AKI (Research octane number 91) can be used, but only under the following precautions:

- have the fuel tank filled only partially with unleaded regular gasoline, and fill up with unleaded premium as soon as possible.
- avoid full throttle driving and abrupt acceleration

However, for maximum vehicle performance, the use of unleaded premium gasoline is recommended.

⚠ CAUTION

Using a fuel other than that specified could adversely affect the emission control system, and may also affect the warranty coverage.

Under no circumstances should a leaded gasoline be used, because this will damage the three-way catalyst.

Gasoline specifications

NISSAN recommends using gasoline that meets the World-Wide Fuel Charter specifications where it is available. Many of the automobile manufacturers developed this specification to improve emission system and vehicle performance. Ask your service station manager if the gasoline meets the World-wide Fuel Charter specifications.

Reformulated gasoline

Some fuel suppliers are now producing reformulated gasolines. These gasolines are specially designed to reduce vehicle emissions. NISSAN supports efforts towards cleaner air and suggests that you use reformulated gasoline when available.

Gasoline containing oxygenates

Some fuel suppliers sell gasoline containing oxygenates such as ethanol, MTBE and methanol with or without advertising their presence. NISSAN does not recommend the use of fuels of which the oxygenate content and the fuel compatibility for your NISSAN cannot be readily determined. If in doubt, ask your service station manager.

If you use oxygenate-blend gasoline, please take the following precautions as the usage of such fuels may cause vehicle performance problems and/or fuel system damage.

- **The fuel should be unleaded and have an octane rating no lower than that recommended for unleaded gasoline.**
- **If an oxygenate-blend other than methanol blend is used, it should contain no more than 10% oxygenate. (MTBE may, however, be added up to 15%.)**
- **If a methanol blend is used, it should contain no more than 5% methanol (methyl alcohol, wood alcohol). It should also contain a suitable amount of appropriate cosolvents and corrosion inhibitors. If not properly formulated with appropriate cosolvents and**

corrosion inhibitors, such methanol blends may cause fuel system damage and/or vehicle performance problems. At this time, sufficient data is not available to ensure that all methanol blends are suitable for use in NISSAN vehicles.

If any driveability problems such as engine stalling and difficult hot-starting are experienced after using oxygenate-blend fuels, immediately change to a non-oxygenate fuel or a fuel with a low blend of MTBE.

Take care not to spill gasoline during refueling. Gasoline containing oxygenates can cause paint damage.

Aftermarket fuel additives

NISSAN does not recommend the use of any aftermarket fuel additives (for example, fuel injector cleaner, octane booster, intake valve deposit removers, etc.) which are sold commercially. Many of these additives intended for gum, varnish or deposit removal may contain active solvents or similar ingredients that can be harmful to the fuel system and engine.

Octane rating tips

Using unleaded gasoline with an octane rating lower than recommended can cause persistent, heavy "spark knock." ("Spark knock" is a metallic rapping noise.) If severe, this can lead to engine damage. If you detect a persistent heavy spark knock even when using gasoline of the stated octane rating, or if you hear steady spark knock while holding a steady speed on level roads, have a NISSAN dealer correct the condition. Failure to correct the condition is misuse of the vehicle, for which NISSAN is not responsible.

Incorrect ignition timing may result in spark knock, after-run and/or overheating, which may cause excessive fuel consumption or engine damage. If any of the above symptoms are encountered, have your vehicle checked at a NISSAN dealer.

However, now and then you may notice light spark knock for a short time while accelerating or driving up hills. This is not a cause for concern, because you get the greatest fuel benefit when there is light spark knock for a short time under heavy engine load.

API certification mark

API service symbol

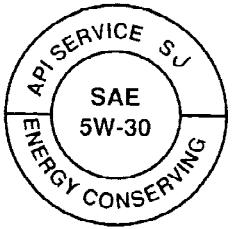

WTI0033

ENGINE OIL AND OIL FILTER RECOMMENDATION

Selecting the correct oil

It is essential to choose engine oil with the correct quality and viscosity to ensure satisfactory engine life and performance. NISSAN recommends the use of a low friction oil (energy conserving oil) in order to improve fuel economy and conserve energy. Oils which do not have the specified quality label should not be used as they could cause engine damage.

Only those engine oils with the American Petroleum Institute (API) CERTIFICATION MARK on the front of the container should be used. This type of oil supersedes the existing API SG, SH, or SJ and Energy Conserving I & II categories.

If you cannot find engine oil with the API CERTIFICATION MARK, use API grade SG/SH, Energy Conserving I & II or API grade SJ or SL, Energy Conserving oil. An oil with a single designation SG or SH, or in combination with other categories (for example, SG/CC or SG/CD) may also be used if one with the API CERTIFICATION MARK cannot be found. An ILSAC grade GF-I, GF-II & GF-III oil can also be used.

NISSAN recommends mineral based oils. These oils must, however, meet the API quality and SAE viscosity ratings specified for your vehicle.

Oil additives

NISSAN does not recommend the use of oil additives. The use of an oil additive is not necessary when the proper oil type is used and maintenance intervals are followed.

Oil which may contain foreign matter or has been previously used should not be used.

Oil viscosity

The engine oil viscosity or thickness changes with temperature. Because of this, it is important to select the engine oil viscosity based on the temperatures at which the vehicle will be operated before the next oil change. The chart “Recommended SAE viscosity number” shows the recommended oil viscosities for the expected ambient temperatures. Choosing an oil viscosity other than that recommended could cause serious engine damage.

Selecting the correct oil filter

Your new NISSAN vehicle is equipped with a high-quality genuine NISSAN oil filter. When replacing, use a genuine NISSAN oil filter or its equivalent for the reason described in “Change intervals”.

Change intervals

The oil and oil filter change intervals for your engine are based on the use of the specified quality oils and filters. Using engine oil and filters that are not of the specified quality, or exceeding recommended oil and filter change intervals could reduce engine life. Damage to the engine caused by improper maintenance or use of incorrect oil and filter quality and/or viscosity is not covered by the NISSAN new vehicle warranty.

Your engine was filled with a high-quality engine oil when it was built. You do not have to change the oil before the first recommended change interval. Oil and filter change intervals depend upon how you use your vehicle.

Operation under the following conditions may require more frequent oil and filter changes:

- repeated short distance driving at cold outside temperatures
- driving in dusty conditions
- extensive idling
- towing a trailer

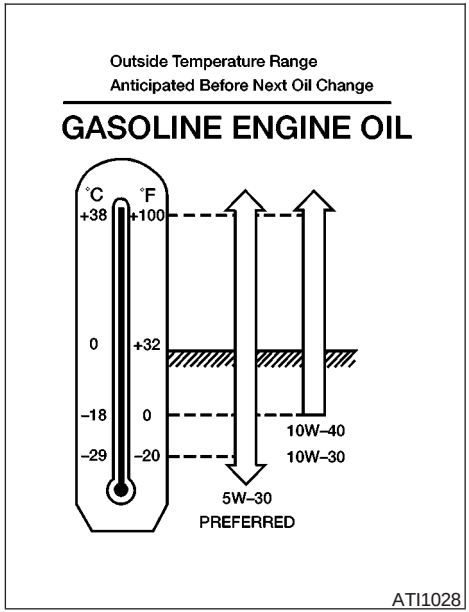

RECOMMENDED SAE VISCOSITY NUMBER

- **SAE 5W-30 viscosity oil is preferred for all temperatures. SAE 10W-30 or SAE 10W-40 viscosity oils may be used if the ambient temperature is above 0°F (-18°C).**

AIR CONDITIONER SYSTEM REFRIGERANT AND LUBRICANT RECOMMENDATIONS

The air conditioner system in your NISSAN vehicle must be charged with the refrigerant HFC-134a (R-134a) and the lubricant, NISSAN A/C system oil Type R or the exact equivalents.

⚠ CAUTION

The use of any other refrigerant or lubricant will cause severe damage to the air conditioning system and will require the replacement of all air conditioner system components.

The refrigerant HFC-134a (R-134a) in your NISSAN vehicle does not harm the earth's ozone layer. Although this refrigerant does not affect the earth's atmosphere, certain government regulations require the recovery and recycling of any refrigerant during automotive air conditioner system service. A NISSAN dealer has the trained technicians and equipment needed to recover and recycle your air conditioner system refrigerant.

Contact a NISSAN dealer when servicing your air conditioner system.

SPECIFICATIONS

ENGINE

Model		KA24DE	VG33E/VG33ER	
Type		Gasoline, 4-cycle	Gasoline, 4-cycle	
Cylinder arrangement		4-cylinder in-line	6-cylinder, V-slanted at 60°	
Bore x Stroke	in (mm)	3.504 x 3.780 (89. x 96.0)	3.602 x 3.268 (91.5 x 83.0)	
Displacement	cu in (cm^3)	145.78 (2,389)	199.84 (3,275)	
Firing order		1–3–4–2	1–2–3–4–5–6	
Idle speed	rpm	See the “Emission Control label” on the underside of the hood.		
Ignition timing degree (B.T.D.C.) at idle speed	degree/rpm			
CO percentage at idle speed	[No air] %			
			Except Supercharger	Supercharger
Spark plug		PFR5G-11 (Standard)*1 PFR6G-11 (Cold)*1	PFR5G-11 (Standard)*1 PFR6G-11 (Cold)*1 PFR4G-11 (Hot) *1	PFR6G-11 (Standard)*1 PFR7G-11 (Cold)*1 PFR5G-11 (Hot) *1
Spark plug gap (Nominal)	in (mm)	0.043 (1.1)	0.043 (1.1)	
Camshaft operation		Timing chain	Timing belt*2	
Generator belt size				
Width x Length	in (mm)	0.413 x 35.63 (10.5 x 905)	0.701 x 31.69 (17.8 x 805)	

*1: Always check with the Parts Department at a NISSAN dealer for the latest parts information.

*2: Periodic maintenance is necessary. See “Periodic maintenace schedules” in the “NISSAN Service and Maintenace Guide.”

The spark ignition system of this vehicle meets all requirements of the Canadian Interference-Causing Equipment Regulations.

WHEELS AND TIRES

			Road wheel/offset in (mm)	Tire	Spare tire size
4X2	King Cab:	XE	15X6JJ/1.18 (30) Steel 15X7JJ/0.79 (20) Alloy 15X7JJ/1.18 (30) Steel* 15X7JJ/1.57 (40) Alloy*	P225/70R15 P225/70R15 P265/70R15* P265/70R15*	T135/90D16 T135/90D16 P265/70R15* P265/70R15*
		SE	16X7JJ/1.57 (40) Alloy	P255/65R16	P255/65R16
		SC	17X7JJ/1.57 (40) Alloy	P265/55R17	P265/55R17
	Crew Cab:	XE	15X7JJ/1.18 (30) Alloy 15X7JJ/1.57 (40) Alloy	P265/70R15 P265/70R15	P265/70R15 P265/70R15
		SE	16X7JJ/1.57 (40) Alloy	P255/65R16	P255/65R16
		SC	17X7JJ/1.57 (40) Alloy	P265/55R17	P265/55R17
4X4	King Cab:	XE	15X7JJ/1.18 (30) Steel 15X7JJ/1.57 (40) Alloy	P265/70R15 P265/70R15	P265/70R15 P265/70R15
		SE	16X7JJ/1.57 (40) Alloy	P265/70R16	P265/70R16
		SC	16X7JJ/1.57 (40) Alloy 17X7JJ/1.57 (40) Alloy	P265/70R16 P265/65R17	P265/70R16 P265/65R17
	Crew Cab:	XE	15X7JJ/1.18 (30) Alloy 15X7JJ/1.57 (40) Alloy	P265/70R15 P265/70R15	P265/70R15 P265/70R15
		SE	16X7JJ/1.57 (40) Alloy	P265/70R16	P265/70R16
		SC	16X7JJ/1.57 (40) Alloy 17X7JJ/1.57 (40) Alloy	P265/70R16 P265/65R17	P265/70R16 P265/65R17

*Not available with KA24DE engine.

DIMENSIONS AND WEIGHTS

Unit: mm (in)

Drive Type	2WD			4WD		
Body	King Cab	Crew Cab	Crew Cab	King Cab	Crew Cab	Crew Cab
Wheelbase	Long	Short	Long	Long	Short	Long
Overall length*1	5153 (202.9)	5077 (199.9)	5532 (217.8)	5153 (202.9)	5077 (199.9)	5532 (217.8)
Overall width	1725 (67.7)*2 1808 (71.2)*3,*4	1808 (71.2)	1808 (71.2)	1808 (71.2)	1808 (71.2)	1808 (71.2)
Overall height	1605 (63.2)*2 1694 (66.7)*3	1694 (66.7)*3 1775 (69.9)*4	1694 (66.7)*3 1775 (69.9)*4	1694 (66.7)	1704 (67.1)*3 1823 (71.8)*4 1836 (72.3)*5	1704 (67.1)*3 1823 (71.8)*4 1836 (72.3)*5
Front tread	1395 (54.9)*2 1525 (60)*3	1525 (60)	1525 (60)	1525 (60)	1525 (60)	1525 (60)
Rear tread	1390 (54.7)*2 1507 (59.3)*3,*4	1507 (59.3)	1507 (59.3)	1507 (59.3)	1507 (59.3)	1507 (59.3)
Wheelbase	2950 (116.1)	2950 (116.1)	3329.9 (131.1)	2950 (116.1)	2950 (116.1)	3329.9 (131.1)
Gross vehicle weight rating lb (kg)	See the “F.M.V.S.S. certification label” on the driver side door jamb pillar.					
Gross axle weight rating						
Front lb (kg)						
Rear lb (kg)						

*1: Includes rear step bumper.
*2: XE with KA24DE engine.
*3: XE with VG33E engine.
*4: SC models.
*5: SE models.

WHEN TRAVELING OR REGISTERING YOUR VEHICLE IN ANOTHER COUNTRY

When planning to drive your NISSAN vehicle in another country, you should first find out if the fuel available is suitable for your vehicle's engine.

Using fuel with an octane rating that is too low may cause engine damage. All gasoline vehicles must be operated with unleaded gasoline. Therefore, avoid taking your vehicle to areas where appropriate fuel is not available.

When transferring the registration of your vehicle to another country, state, province or district, it may be necessary to modify the vehicle to meet local laws and regulations.

The laws and regulations for motor vehicle emission control and safety standards vary according to the country, state, province or district; therefore, vehicle specifications may differ.

When any vehicle is to be taken into another country, state, province or district and registered, its modifications, transportation, and registration are the responsibility of the user. NISSAN is not responsible for any inconvenience that may result.

VEHICLE IDENTIFICATION

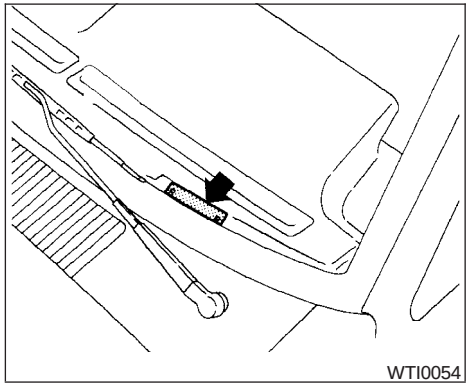

VEHICLE IDENTIFICATION NUMBER (VIN) PLATE

The vehicle identification number (VIN) plate is attached as shown. This number is the identification for your vehicle and is used in the vehicle registration.

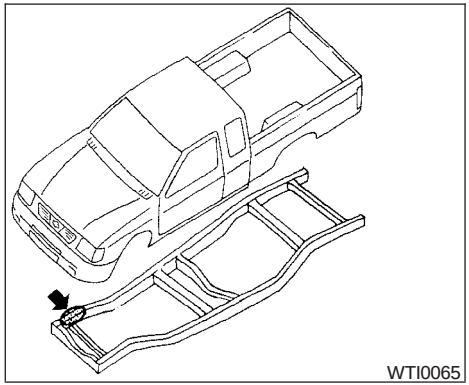

VEHICLE IDENTIFICATION NUMBER (chassis number)

The vehicle identification number is located as shown.

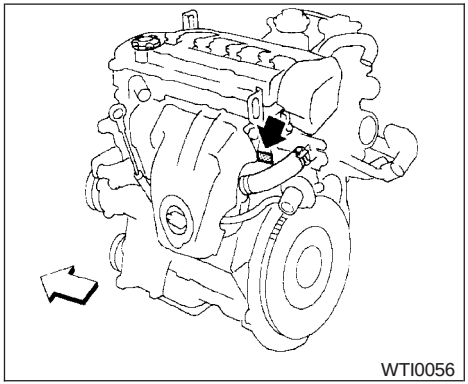

KA24DE engine

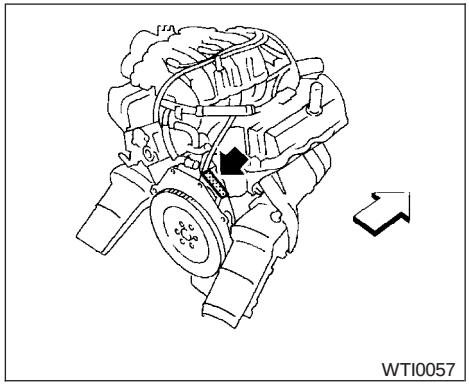

VG33E/VG33ER engine

ENGINE SERIAL NUMBER

The number is stamped on the engine as shown.

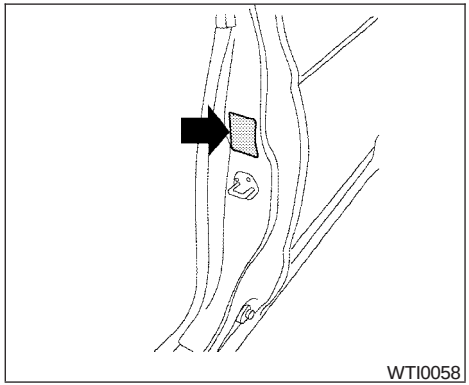

F.M.V.S.S. CERTIFICATION LABEL

The Federal Motor Vehicle Safety Standard (F.M-.V.S.S.) certification label is affixed as shown. This label contains valuable vehicle information, such as: Gross Vehicle Weight Ratings (GVWR), Gross Axle Weight Rating (GAWR), month and year of manufacture, Vehicle Identification Number (VIN), etc. Review it carefully.

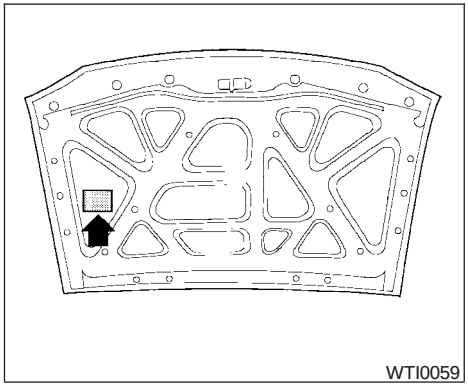

EMISSION CONTROL INFORMATION LABEL

The emission control information label is attached as shown.

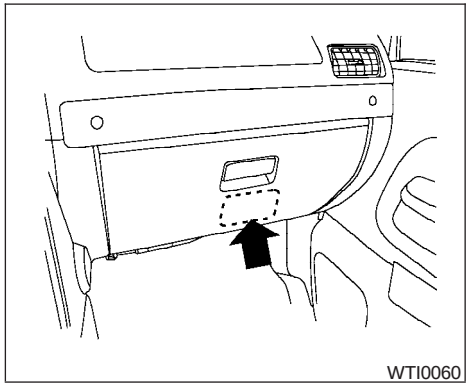

TIRE PLACARD

The cold tire pressure is shown on the tire placard. The tire placard is located as shown.

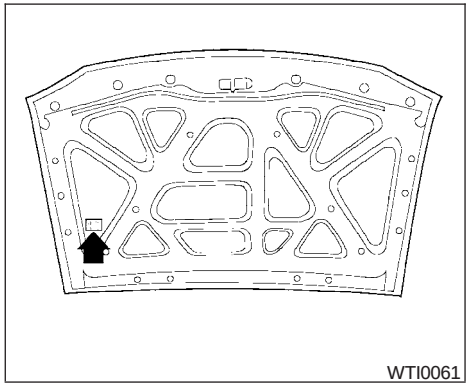

AIR CONDITIONER SPECIFICATION LABEL

The air conditioner specification label is affixed as shown.

INSTALLING FRONT LICENSE PLATE

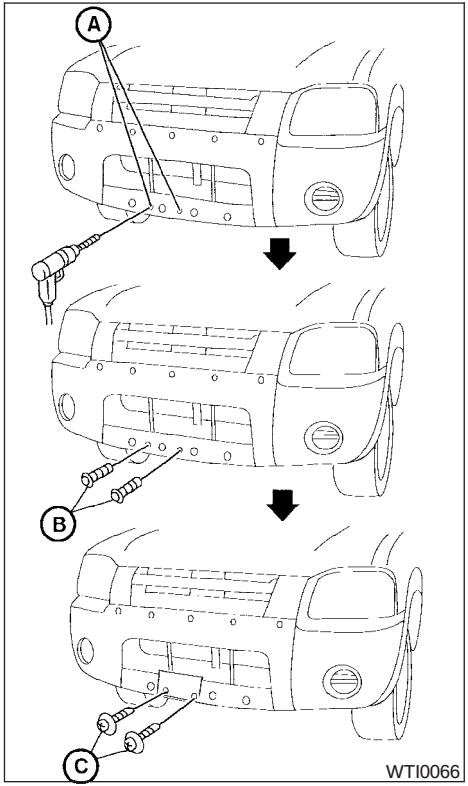

Use the following steps to mount the front license plate:

1. Remove the two screw gromments from the glove box.
2. Carefully drill a hole using a 0.39 inch (10 mm) drill bit at each location mark (small dimple) on the bumper fascia Ⓐ.
3. Insert one grommet into each hole Ⓑ.
4. Insert a small screwdriver into the grommet to turn the plastic insert.
5. Install the license plate with two M5 x 25 mm bolts Ⓒ.

VEHICLE LOADING INFORMATION

⚠ WARNING

- **It is extremely dangerous to ride in a cargo area inside a vehicle. In a collision, people riding in these areas are more likely to be seriously injured or killed.**
- **Do not allow people to ride in any area of your vehicle that is not equipped with seats and seat belts.**
- **Be sure everyone in your vehicle is in a seat and using a seat belt properly.**

TERMS

It is important to familiarize yourself with the following terms before loading your vehicle:

- Curb Weight (actual weight of your vehicle) - vehicle weight including: standard and optional equipment, fluids, emergency tools, and spare tire assembly. This weight **does not** include passengers and cargo.
- GVW (Gross Vehicle Weight) - curb weight plus the combined weight of passengers and cargo.
- GVWR (Gross Vehicle Weight Rating) - maximum total weight (load) limit specified for the vehicle.

- GAWR (Gross Axle Weight Rating) - maximum weight (load) limit specified for the front or rear axle.

DETERMINING VEHICLE LOAD CAPACITY

The load capacity of this vehicle is determined by weight, not by available cargo space. For example, a roof rack, bike carrier, or similar equipment does not increase load carrying capacity of your vehicle.

To determine vehicle load capacity:

Vehicle weight can be determined by using a commercial-grade scale, found at places such as a truck stop, gravel quarry, grain elevator, or a scrap metal recycling facility.

1. Determine the curb weight of your vehicle.
2. Compare the curb weight amount to the GVWR specified for your vehicle to determine how much more weight your vehicle can carry.
3. After loading (cargo and passengers), reweigh your vehicle to determine if either GVWR or GAWR for your vehicle is exceeded. If GVWR is exceeded, remove cargo as necessary. If either the front or rear GAWR is exceeded, shift the load or remove cargo as necessary.

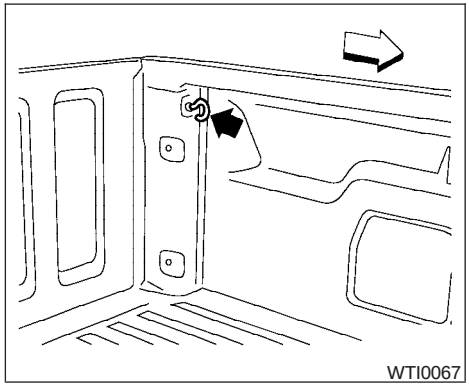

SECURING THE LOAD

For your convenience, tie down hooks are placed at each corner of the truck box. These may be used to help secure cargo loaded into the truck box.

⚠ WARNING

- **Properly secure all cargo with ropes or straps to help prevent it from sliding or shifting. In a sudden stop or collision, unsecured cargo could cause personal injury.**
- **Do not load your vehicle any heavier than the GVWR or the maximum front and rear GAWRs. If you do, parts of your vehicle can break, tire damage could occur, or it can change the way your vehicle handles. This could result in loss of control and cause personal injury.**

LOADING TIPS

- The GVW must not exceed GVWR or GAWR as specified on the F.M.V.S.S. Certification Label.
- Do not load the front and rear axle to the GAWR. Doing so will exceed the GVWR.
- Loads should be spread out, and cargo should be properly secured. Large or heavy objects should be placed toward the front of the truck box to help prevent shifting.

TRUCK-CAMPER LOADING INFORMATION

⚠ WARNING

Overloading not only can shorten the life of your vehicle and the tire, but can also cause unsafe vehicle handling and longer braking distances. This may cause a premature tire failure which could result in a serious accident and personal injury. Failures caused by overloading are not covered by the vehicle's warranty.

CREW CAB MODELS

Crew Cab models should not be used to carry a slide-in camper.

KING CAB MODELS

This information is provided for you to properly install a slide-in camper and is based on the National Highway Traffic Safety Administration regulations. It is recommended that, before installing the camper, you carefully read the following information and ensure that the camper meets the specifications.

This information may not apply to some Canada model vehicles.

SPECIAL BODY VEHICLES

Some vehicles are equipped with commercial or camper bodies. However, this Owner's Manual does not cover these options. For further information, please refer to the body manufacturer's instruction manual.

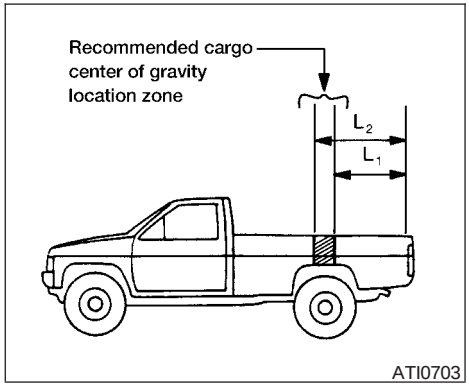

LOCATION FOR CENTER OF GRAVITY

The illustration indicates the recommended cargo center of gravity location zone.

King Cab:

L1 = 960.1 mm (37.8 in), L2 = 1,087.1 mm (42.8 in)

⚠ WARNING

Improper loading may be dangerous. If a load is too far back, it can affect handling characteristics. If a load is too far forward, the front axle may be overloaded.

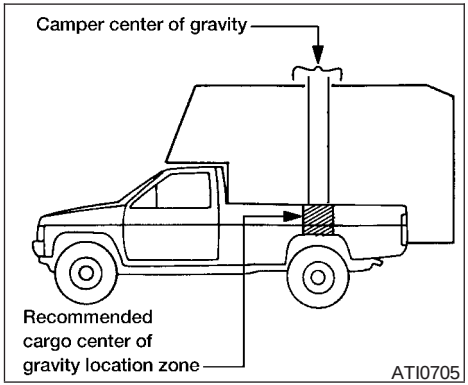

When the truck is used to carry a slide-in camper, the total cargo load of the truck consists of the camper manufacturer's weight figure, plus:

- the weight of installed additional camper equipment not included in the camper manufacturer's weight figure,
- the weight of camper cargo,
- and the weight of occupants in the camper.

The total cargo load should not exceed the truck's pay load weight rating and the camper's center of gravity should fall within the truck's recommended center of gravity location zone when installed.

⚠ WARNING

Overloading or improper loading can adversely affect vehicle handling, braking and performance and may lead to accidents.

VEHICLE LOAD WEIGHT CAPACITY

The vehicle load weight capacity shown on following charts indicate the maximum total weight of passengers, optional equipment (air conditioning, trailer hitch, etc) and cargo that your vehicle is designed to carry.

Before driving a loaded vehicle, confirm that you do not exceed the Gross Vehicle Weight Rating (GVWR) or the Gross Axle Weight Rating (GAWR) for your vehicle. See ''Vehicle Loading Information'' earlier in this section for details.

Also check tires for proper inflation pressures. See the tire placard.

Vehicle Load Weight Capacity (KA24DE Engine)				
	2WD			
	King Cab			
	Manual Transmission		Automatic Transmission	
	XE		XE	
	lbs	kg	lbs	kg
Federal	1312	595	1312	595
California	1312	595	1312	595
Canada	1312	595	1312	595

Vehicle Load Weight Capacity (VG33E Engine)												
	2WD						4WD					
	K/C		C/C S/B		C/C L/B		K/C		C/C S/B		C/C L/B	
	lbs	kg	lbs	kg	lbs	kg	lbs	kg	lbs	kg	lbs	kg
Federal	1191	540	1036	470	1103	500	1147	520	970	440	1080	490
California	1191	540	1036	470	1103	500	1147	520	970	440	1080	490
Canada	1191	540	N/A	N/A	1103	500	1147	520	N/A	N/A	1080	490

Vehicle Load Weight Capacity (VG33ER Engine)												
	2WD						4WD					
	K/C		C/C S/B		C/C L/B		K/C		C/C S/B		C/C L/B	
	lbs	kg	lbs	kg	lbs	kg	lbs	kg	lbs	kg	lbs	kg
Federal	1169	530	1014	460	1080	490	1080	490	915	415	1025	465
California	1169	530	1014	460	1080	490	1080	490	915	415	1025	465
Canada	N/A	N/A	N/A	N/A	1080	490	N/A	N/A	N/A	N/A	1025	465

MEASUREMENT OF WEIGHTS

Secure loose items to prevent weight shifts that could affect the balance of your vehicle. When the vehicle is loaded, drive to a scale and weigh the front and the rear wheels separately to determine axle loads. Individual axle loads should not exceed either of the gross axle weight ratings (GAWR). The total of the axle loads should not exceed the gross vehicle weight rating (GVWR). These ratings are given on the vehicle certification label. If weight ratings are exceeded, move or remove items to bring all weights below the ratings.

Your new vehicle was designed to be used primarily to carry passengers and cargo. Remember that towing a trailer places additional loads on your vehicle's engine, drive train, steering, braking and other systems.

A **Nissan Trailer Towing Guide (U.S. only)** is available from a NISSAN dealer. This guide includes information on trailer towing ability and the special equipment required for proper towing.

MAXIMUM LOAD LIMITS

Maximum trailer loads

Never allow the total trailer load to exceed the value specified in the following Towing Load/Specification Chart found later in this section. The total trailer load equals trailer weight plus its cargo weight.

- When towing a trailer load of 1,000 lbs. (454 kg) or more, trailers with a brake system MUST be used.

The maximum GCWR (Gross Combined Weight Rating) should not exceed the value specified in the following Towing Load/ Specification Chart.

The GCWR equals the combined weight of the towing vehicle (including passengers and cargo) plus the total trailer load. Towing loads greater than these or using improper towing equipment could adversely affect vehicle handling, braking and performance.

The ability of your vehicle to tow a trailer is not only related to the maximum trailer loads, but also the places you plan to tow. Tow weights appropriate for level highway driving may have to be reduced on very steep grades or in low traction situations (for example, on slippery boat ramps).

Temperature conditions can also affect towing. For example, towing a heavy trailer in high outside temperatures on graded roads can affect engine performance and cause overheating.

⚠ CAUTION

Vehicle damage resulting from improper towing procedures are not covered by NISSAN warranties. A NISSAN Trailer Towing Guide (U.S. only) containing information on trailer towing ability and the special equipment required may be obtained from a NISSAN dealer.

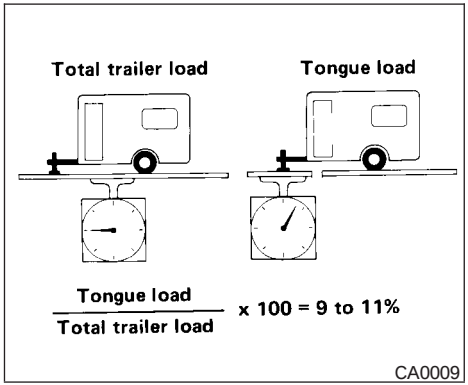

Tongue load

Keep the tongue load between 9 - 11 percent of the total trailer load within the maximum tongue load limits shown in the following Towing Load/Specification Chart. If the tongue load becomes excessive, rearrange cargo to allow for proper tongue load.

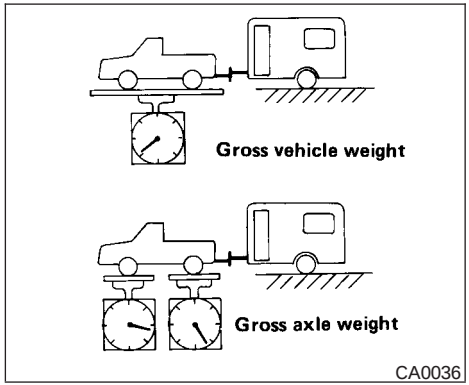

Maximum gross vehicle weight/maximum gross axle weight

The gross vehicle weight of the towing vehicle must not exceed the gross vehicle weight rating (GVWR) shown on the F. M. V. S. S. certification label. The gross vehicle weight equals the combined weight of the unloaded vehicle, passengers, luggage, hitch, trailer tongue load and any other optional equipment. In addition, front or rear gross axle weight must not exceed the gross axle weight rating (GAWR) shown on the F. M. V. S. S. certification label.

TOWING LOAD/SPECIFICATION CHART

Unit: lbs (kg)

Model	2WD				4WD	
Weight	M/T (4 cyl)	A/T (4 cyl)	M/T (V6)	A/T (V6)	M/T (V6)	A/T (V6)
Maxiumum Trailer Weight*1	3,001 (1,361)	2,000 (907)	Except Supercharger 3,500 (1,588)	Except Supercharger 5,000 (2,268)	Except S/C C/C L/B 3,500 (1,588)	Except S/C C/C L/B 5,000 (2,268)
			Supercharger 3,400 (1,542)	Supercharger 4,902 (2,223)	S/C C/C L/B 3,400 (1,542)	S/C C/C L/B 4,902 (2,223)
Maximum Tongue Load	300 (136)	200 (91)	Except Supercharger 350 (159)	Except Supercharger 500 (227)	350 (159)	Except S/C C/C L/B 500 (227)
			Supercharger 340 (154)	Supercharger 490 (222)	S/C C/C L/B 340 (154)	S/C C/C L/B 490 (222)
Gross Combined Weight Rating	7,000 (3,175)	6,000 (2,721)	8,002 (3,629)	9,500 (4,309)	8,002 (3,629)	9,500 (4,309)
Recommended Equipment*2	Sway Control Device	—	Sway Control Device	Sway Control Device	Sway Control Device	Sway Control Device

*1: All towing above 1,000 lb (454 kg) requires the use of trailer brakes. NISSAN recommends the use of a tandem axle trailer whenever towing above 3,000 lb (1,361 kg).

*2: A sway control device is recommended for all towing above 2,000 lb (907 kg). Sway control devices are not offered by NISSAN. See a professional trailer/hitch outlet for a properly designed sway control device for your trailer.

M/T = Manual Transmission

A/T = Automatic Transmission

2WD = 2-wheel drive

4WD = 4-wheel drive

C/C = Crew Cab

L/B = Long Bed

S/C = Supercharger

TOWING SAFETY

Trailer hitch

Check the towing capacity of your bumper hitch or receiver-type frame mounted hitch. Choose a proper hitch for your vehicle and trailer. A genuine Nissan trailer hitch is available from your NISSAN dealer. Make sure the trailer hitch is securely attached to the vehicle to help avoid personal injury or property damage due to sway caused by crosswinds, rough road surfaces or passing trucks.

⚠ CAUTION

- **Special hitches which include frame reinforcements are required for towing above 2,000 lb (907 kg). Suitable genuine NISSAN hitches for pickup trucks and sport utility vehicles are available at a NISSAN dealer.**
- **The hitch should not be attached to or affect the operation of the impact-absorbing bumper.**
- **Do not use axle-mounted hitches.**
- **Do not modify the vehicle exhaust system, brake system, etc. to install a trailer hitch.**
- **To reduce the possibility of additional damage if your vehicle is struck from the rear, where practical, remove the hitch and/or receiver when not in use.**
- **After the hitch is removed, seal the bolt holes to prevent exhaust fumes, water or dust from entering the passenger compartment.**
- **Regularly check that all trailer hitch mounting bolts are securely mounted.**

Tire pressures

- When towing a trailer, inflate the vehicle tires to the recommended cold tire pressure indicated on the tire placard.
- Trailer tire condition, size, load rating and proper inflation pressure should be in accordance with the trailer and tire manufacturer's specifications.

Safety chains

Always use suitable safety chains between your vehicle and the trailer. The safety chains should be crossed and should be attached to the hitch, not to the vehicle bumper or axle. Be sure to leave enough slack in the chains to permit turning corners.

Trailer lights

⚠ CAUTION

When splicing into the vehicle electrical system, a commercially available power-type module/converter must be used to provide power for all trailer lighting. This unit uses the vehicle battery as a direct power source for all trailer lights while using the vehicle tail light, stoplight and turn signal circuits as a signal source. The module/converter must draw no more that 15 milliamps from the stop and tail lamp circuits. Using a module/converter that exceeds these power requirements may damage the vehicle's electrical system. See a reputable trailer dealer to obtain the proper equipment and to have it installed.

Trailer lights should comply with federal and/or local regulations. For assistance in hooking up trailer lights, contact a NISSAN dealer or reputable trailer dealer.

Trailer brakes

If your trailer is equipped with a braking system, make sure it conforms to federal and/or local regulations and that it is properly installed.

⚠ WARNING

Never connect a trailer brake system directly to the vehicle brake system.

Pre-towing tips

- Be certain your vehicle maintains a level position when a loaded and/or unloaded trailer is hitched. Do not drive the vehicle if it has an abnormal nose-up or nose-down condition; check for improper tongue load, overload, worn suspension or other possible causes of either condition.
- Always secure items in the trailer to prevent load shift while driving.
- Be certain your rearview mirrors conform to all federal, state or local regulations. If not, install any mirrors required for towing before driving the vehicle.

Trailer towing tips

In order to gain skill and an understanding of the vehicle's behavior, you should practice turning, stopping and backing up in an area which is free from traffic. Steering stability and braking performance will be somewhat different than under normal driving conditions.

- Always secure items in the trailer to prevent load shift while driving.
- Avoid abrupt starts, acceleration or stops.
- Avoid sharp turns or lane changes.
- Always drive your vehicle at a moderate speed. Some states or provinces have specific speed limits for vehicles that are towing trailers. Obey the local speed limits.
- When backing up, hold the bottom of the steering wheel with one hand. Move your hand in the direction in which you want the trailer to go. Make small corrections and back up slowly. If possible, have someone guide you when you are backing up.
- Always block the wheels on both vehicle and trailer when parking. Parking on a slope is not recommended; however, if you must do so, and if your vehicle is equipped with an automatic transmission, first block the wheels and apply the parking brake, and then move the transmission shift selector lever into the P (Park) position. If you move the shift selector lever to the P (Park) position before blocking the wheels and applying the parking brake, transmission damage could occur.
- When going down a hill, shift into a lower gear and use the engine braking effect. When going up a long grade, downshift the transmission to a lower gear and reduce speed to reduce chances of engine overloading and/or overheating.
- If the engine coolant rises to an extremely high temperature when the air conditioner system is on, turn off the air conditioner. Coolant heat can be additionally vented by opening the windows, switching the fan control to high and setting the temperature control to the HOT position.
- Trailer towing requires more fuel than normal circumstances.
- Avoid towing a trailer for your vehicle's first 500 miles (805 km).
- For the first 500 miles that you do tow, do not drive over 50 MPH (80 km/h).
- Have your vehicle serviced more often than at intervals specified in the recommended Maintenance Schedule in the "NISSAN Service and Maintenance Guide".
- When making a turn, your trailer wheels will be closer to the inside of the turn than your vehicle wheels. To compensate for this, make a larger than normal turning radius during the turn.
- Crosswinds and rough roads will adversely affect vehicle/trailer handling, possibly causing vehicle sway. When being passed by

larger vehicles, be prepared for possible changes in crosswinds that could affect vehicle handling. If swaying does occur, firmly grip the steering wheel, steer straight ahead, and immediately (but gradually) reduce vehicle speed. This combination will help stabilize the vehicle. Never increase speed.

- Be careful when passing other vehicles. Passing while towing a trailer requires considerably more distance than normal passing. Remember, the length of the trailer must also pass the other vehicle before you can safely change lanes.
- To maintain engine braking efficiency and electrical charging performance, do not use 5th gear (manual transmission) or overdrive (automatic transmission).
- Avoid holding the brake pedal down too long or too frequently. This could cause the brakes to overheat, resulting in reduced braking efficiency.
- Increase your following distance to allow for greater stopping distances while towing a trailer. Anticipate stops and brake gradually.
- Do not use cruise control while towing a trailer.
- Check your hitch, trailer wiring harness connections, and trailer wheel lug nuts after 50 miles (80 km) of travel and at every break.
- When stopped in traffic for long periods of time in hot weather, put the vehicle in the P (Park) position.

When towing a trailer, transmission oil/fluid should be changed more frequently. For additional information, see the "Maintenance and do-it-yourself" section earlier in this manual.

FLAT TOWING

Towing your vehicle with all four wheels on the ground is sometimes called flat towing. This method is sometimes used when towing a vehicle behind a recreational vehicle, such as a motor home.

⚠ CAUTION

- **Failure to follow these guidelines can result in severe transmission damage.**
- **Whenever flat towing your vehicle, always tow forward, never backward.**
- **DO NOT tow any automatic transmission vehicle with all four wheels on the ground (flat towing). Doing so WILL DAMAGE internal transmission parts due to lack of transmission lubrication.**
- **For emergency towing procedures refer to "Towing recommended by NISSAN" in the "In case of emergency" section of this manual.**

Automatic Transmission

To tow a vehicle equipped with an automatic transmission, an appropriate vehicle dolly **MUST** be placed under the towed vehicle's drive wheels. **Always** follow the dolly manufacturer's recommendations when using their product.

Manual Transmission

- Always tow with the manual transmission in Neutral.
- On four-wheel drive vehicles, place the transfer case in the 2H range. Failure to do so will cause the powertrain to bind up.
- After towing 500 miles (805 km), start and idle the engine with the transmission in Neutral for two minutes. Failure to idle the engine after every 500 miles (805 km) of towing may cause damage to internal transmission parts.

UNIFORM TIRE QUALITY GRADING

DOT (Department of Transportation) Quality Grades: All passenger car tires must conform to federal safety requirements in addition to these grades.

Quality grades can be found where applicable on the tire sidewall between tread shoulder and maximum section width. For example:

Treadwear 200 Traction AA Temperature A

Treadwear

Treadwear grade is a comparative rating based on tire wear rate when tested under controlled conditions on specified government test courses. For example, a tire graded 150 would wear one and a half (1-1/2) times as well on the government course as a tire graded 100. However, relative tire performance depends on actual driving conditions, and may vary significantly due to variations in driving habits, service practices and differences in road characteristics and climate.

Traction AA, A, B and C

The traction grades, from highest to lowest, are AA, A, B, and C. Those grades represent the tire's ability to stop on wet pavement as measured under controlled conditions on specified government test surfaces of asphalt and concrete. A tire marked C may have poor traction performance.

⚠ WARNING

The traction grade assigned to your vehicle tires is based on straight-ahead braking traction tests and does not include acceleration, cornering, hydroplaning or peak traction characteristics.

Temperature A, B and C

Temperature grades are A (the highest), B, and C. They represent a tire's resistance to heat build-up, and its ability to dissipate heat when tested under controlled conditions on a specified indoor laboratory test wheel. Sustained high temperature can cause tire material to degenerate, reducing tire life. Excessive temperatures can lead to sudden tire failure. Grade C corresponds to a performance level which all passenger car tires must meet under the Federal Motor Vehicle Safety Standard No. 109. Grades A and B represent higher levels of performance on laboratory test wheels than the minimum required by law.

⚠ WARNING

The temperature grade for this tire is established for a tire that is properly inflated and not overloaded. Excessive speed, under-inflation, or excessive loading, either separately or in combination, can cause heat build-up and possible tire failure.

EMISSION CONTROL SYSTEM WARRANTY

Your NISSAN vehicle is covered by the following emission warranties:

For USA

1. Emission Defects Warranty
2. Emissions Performance Warranty

Details of these warranties may be found with other vehicle warranties in your Warranty Information Booklet which comes with your NISSAN vehicle. If you did not receive a Warranty Information Booklet, or it is lost, you may obtain a replacement by writing to:

- Nissan North America, Inc.
  Consumer Affairs Department
  P.O. Box 191
  Gardena, CA 90248-0191

For Canada

Emission Control System Warranty

Details of these warranties may be found with other vehicle warranties in your Warranty Information Booklet which comes with your NISSAN vehicle. If you did not receive a Warranty Information Booklet, or it is lost, you may obtain a replacement by writing to:

- Nissan Canada Inc.
  5290 Orbitor Drive
  Mississauga, Ontario, L4W 4Z5

REPORTING SAFETY DEFECTS (US only)

If you believe that your vehicle has a defect which could cause a crash or could cause injury or death, you should immediately inform the National Highway Traffic Safety Administration (NHTSA) in addition to notifying NISSAN.

If NHTSA receives similar complaints, it may open an investigation, and if it finds that a safety defect exists in a group of vehicles, it may order a recall and remedy campaign. However, NHTSA cannot become involved in individual problems between you, your dealer, or NISSAN.

To contact NHTSA, you may call the Auto Safety Hotline toll-free at 1-888-327-4236. You may also write to: NHTSA, U.S. Department of Transportation, Washington, D.C. 20590. You can also obtain other information about motor vehicle safety from the Hotline.

You may notify NISSAN by contacting our Consumer Affairs Department, toll-free, at 1-800-NISSAN-1.

READINESS FOR INSPECTION/ MAINTENANCE (I/M) TEST

Due to legal requirements in some states and Canadian Provinces, your vehicle may be required to be in what is called the “ready condition” for an Inspection/Maintenance (I/M) test of the emission control system.

The vehicle is set to the “ready condition”’ when it is driven through certain driving patterns. Usually, the ready condition can be obtained by ordinary usage of the vehicle.

If a powertrain system component is repaired or the battery is disconnected, the vehicle may be reset to a “not ready” condition. Before taking the I/M test, drive the vehicle through the following pattern to set the vehicle to the ready condition. If you cannot or do not want to perform the driving pattern, a NISSAN dealer can conduct it for you.

⚠ WARNING

Always drive the vehicle in a safe and prudent manner according to traffic conditions and obey all traffic laws.

1. Start the engine when the engine coolant temperature gauge needle points to C. Allow the engine to idle until the gauge needle points between the C and H (normal operating temperature).

2. Accelerate the vehicle to 55 mph (88 km/h), then quickly release the accelerator pedal completely and keep it released for at least 6 seconds.
3. Quickly depress the accelerator pedal for a moment, then drive the vehicle at a speed of 53 - 60 mph (85 - 97 km/h) for at least 5 minutes.
4. Stop the vehicle.
5. Accelerate the vehicle to 35 mph (55 km/h) and maintain the speed for 20 seconds.
6. Repeat steps 4 through 5 at least three times.
7. Accelerate the vehicle to 55 mph (88 km/h) and maintain the speed for at least 3 minutes.
8. Stop the vehicle and turn the engine off.
9. Repeat steps 1 through 8 at least one more time.

If steps 1 through 7 are interrupted, repeat the preceding step. Any safe driving mode is acceptable between steps. Do not stop the engine until step 7 is completed. If you cannot or do not want to perform the driving pattern, a NISSAN dealer can conduct it for you.

DYNAMOMETER TESTING FOR INSPECTION/MAINTENANCE (I/M) TEST (US only)

Due to legal requirements in some states/areas, your vehicle may be tested for emissions on a dynamometer. The transfer control lever (if so equipped) MUST be in the 2H position for I/M testing on a two wheel dynamometer.

⚠ WARNING

- **If the transfer control lever is not in the 2H position during the dynamometer I/M testing, the vehicle could come off the dynamometer and cause serious personal injury and/or body damage to the vehicle.**
- **Serious damage will occur to the 4WD system if the transfer control lever is not in the 2H position.**

Your vehicle is equipped with a variety of computers that monitor and control a number of systems to optimize performance and help service technicians with diagnosis and repair. Depending on the equipment on your vehicle, some of the computers monitor emission control systems, braking systems and air bag systems, just to name a few. Some data about vehicle operation may be stored in the computers for use during servicing. Other data may be stored if a crash event occurs. For example, air bag readiness, air bag performance, and seat belt use by the driver or passenger may be recorded, depending on vehicle equipment. These types of systems are sometimes called Event Data Recorders.

Special equipment can be used to access the electronic data that may be stored in the vehicle's computers (sounds are not recorded). NISSAN and NISSAN dealers have equipment to access some of this data; others may also have this equipment. The data may be retrieved during routine vehicle servicing or for special research. It might also be accessed with the consent of the vehicle owner or lessee, in response to a request by law enforcement, or as otherwise required or permitted by law.

Genuine Nissan Service Manuals

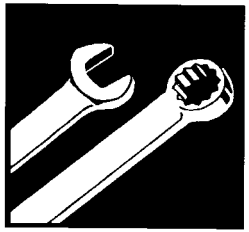

GET THE INSIDE STORY

OWNER'S MANUAL/SERVICE MANUAL ORDER INFORMATION

A genuine NISSAN Service Manual is the best source of service and repair information for your vehicle. Filled with wiring diagrams, illustrations and step-by-step diagnostic and adjustment procedures, this manual is the same one used by the factory trained technicians working at NISSAN dealerships. Also available are genuine NISSAN Owner's Manuals, and genuine NISSAN Service and Owner's Manuals for older NISSAN models.

For USA

For current pricing and availability of genuine **NISSAN Service Manuals** for the 2000 model year and later contact:

Tweddle Litho Company
1-800-450-9491
www.nissan-techinfo.com

For current pricing and availability of genuine **NISSAN Service Manuals** for the 1999 model year and prior, see a NISSAN dealer, or contact:

Resolve Corporation
20770 Westwood Road
Strongsville, OH 44136
1-800-247-5321

For current pricing and availability of genuine **NISSAN Owner's Manuals** for the 2004 model year and prior, see a NISSAN dealer, or contact:

Resolve Corporation
20770 Westwood Road
Strongsville, OH 44136
1-800-247-5321

For Canada

To purchase a copy of a genuine NISSAN Service Manual or Owner's Manual please contact your nearest NISSAN dealer. For the phone number and location of a NISSAN dealer in your area call the NISSAN Information Center at 1-800-387-0122 and a bilingual NISSAN representative will assist you.

Also available are genuine NISSAN Service and Owner's Manuals for older NISSAN models.

IN THE EVENT OF A COLLISION

Unfortunately, accidents do occur. In this unlikely event, there is some important information you should know.

Many insurance companies routinely authorize the use of non-genuine collision parts in order to cut costs, among other reasons.

Insist on the use of genuine NISSAN collision parts!

If you want your vehicle to be restored using parts made to NISSAN's original exacting specifications – if you want to help it to last and hold its resale value, the solution is simple. **Tell your insurance agent and your repair shop to only use Genuine NISSAN Collision Parts.** NISSAN does not warrant non-NISSAN parts, nor does NISSAN's warranty apply to damage caused by a non-genuine part.

Using Genuine NISSAN Parts can help protect your personal safety, preserve your warranty protection and maintain the resale value of your vehicle. And if your vehicle was leased, using Genuine NISSAN Parts may prevent or limit unnecessary excess wear and tear expenses at the end of your lease.

NISSAN designs its hoods with crumple zones to minimize the risk that the hood will penetrate the windshield of your vehicle in an accident. Non-genuine (imitation) parts may not provide such built in safeguards. Also, non-genuine parts often show premature wear, rust and corrosion.

Why should you take a chance?

In over 40 states, the law says you must be advised if non-genuine parts are used to repair your vehicle. And some states have enacted laws that restrict insurance companies from authorizing the use of non-genuine collision parts during the new vehicle warranty. These laws help protect you, so you can take action to protect yourself.

It's your right!

If you should need further information visit us at: www.nissanusa.com.

10 Index

A

Air bag
Passenger supplemental air bag ON/OFF switch and light 1-16
Air bag (See supplemental restraint system) . .1-7
Air bag warning light. 1-18, 2-13
Air cleaner housing filter 8-22
Air conditioner
Air conditioner operation. 4-5
Air conditioner service 4-9
Air conditioner specification label 9-12
Air conditioner system refrigerant and lubrication recommendations 9-6
Heater and air conditioner controls 4-2
Servicing air conditioner 4-9
Air flow charts 4-6
Alarm system (See vehicle security system) . .2-16
Anchor point locations 1-42
Antenna 4-28
Anti-lock brake system (ABS) 5-27
Anti-lock brake warning light. 2-10
Audible reminders. 2-15
Audio system 4-10
Compact disc (CD) player 4-14
FM-AM radio with compact disc (CD) changer 4-16
FM-AM radio with compact disc (CD) player 4-12
Radio 4-10
Steering wheel audio control switch. . . .4-28
Auto-lock free-running hubs 5-22
Automatic
Automatic power window switch 2-33
Automatic transmission fluid (ATF) 8-14
Driving with automatic transmission 5-10
Transmission selector lever lock release 5-14

B

Battery 8-17
Charge warning light 2-11
Battery replacement
(See remote keyless entry system). . . .3-8, 8-29
Before starting the engine 5-8
Belts (See drive belts) 8-19
Brake
Anti-lock brake system (ABS) 5-27
Brake booster 8-27
Brake fluid 8-16
Brake light (See stop light). 8-32
Brake pedal 8-26
Brake system 5-27
Brake warning light 2-10
Brake wear indicators 2-15, 8-27
Parking brake check 8-26
Parking brake operation 5-18
Self-adjusting brakes 8-27
Break-in schedule. 5-20
Brightness control
Instrument panel 2-21
Bulb check/instrument panel 2-9
Bulb replacement 8-32

C

Capacities and recommended fuel/lubricants. 9-2
Car phone or CB radio 4-29
Cargo light switch 2-23
Cargo (See vehicle loading information) . . .9-13
CD care and cleaning 4-27
CD player (See audio system) 4-14
Check engine indicator light
(See malfunction indicator lamp) 2-14
Child restraint with top tether strap 1-41
Child restraints 1-23, 1-30, 1-39
Precautions on child restraints. 1-30
Top tether strap anchor point locations . .1-42
Child safety rear door lock. 3-4
Chimes, audible reminders. 2-15
Cleaning exterior and interior 7-2
Clock 4-13, 4-18
Clutch
Clutch fluid 8-16
Cold weather driving 5-30
Compact disc (CD) player 4-14
Console box. 2-28
Controls
Audio controls (steering wheel) 4-28
Heater and air conditioner controls 4-2

Coolant
Capacities and recommended fuel/lubricants 9-2
Changing engine coolant 8-10
Checking engine coolant level 8-9
Engine coolant temperature gauge 2-5
Corrosion protection 7-5
Cruise control 5-19
Cup holders 2-27

D

Daytime running light system (Canada only) 2-21
Defogger switch
Rear window defogger switch 2-19
Dimensions and weights 9-9
Door locks 3-2
Door open warning light 2-11
Drive belts 8-19
Driving
Auto-lock free-running hubs 5-22
Cold weather driving 5-30
Driving with automatic transmission 5-10
Driving with manual transmission 5-16
Precautions when starting and driving . . .5-2
Dual 12 volt power outlets 2-25

E

Economy - fuel 5-21
Emission control information label 9-12
Emission control system warranty 9-25
Engine
Before starting the engine 5-8
Capacities and recommended fuel/lubricants 9-2
Changing engine coolant 8-10
Changing engine oil 8-11
Changing engine oil filter 8-13
Checking engine coolant level 8-9
Checking engine oil level 8-10
Engine compartment check locations 8-9
Engine coolant temperature gauge 2-5
Engine cooling system 8-9
Engine oil 8-10
Engine oil and oil filter recommendation . .9-5
Engine oil viscosity 9-5
Engine serial number 9-11
Engine specifications 9-7
Starting the engine 5-9
Engine oil pressure low/engine coolant temperature high warning light 2-11
Event data recorders 9-26
Exhaust gas (Carbon monoxide) 5-2

F

First aid kit 6-2
Flashers
(See hazard warning flasher switch) 2-22
Flat tire 6-2
Floor mat positioning aid 7-4
Fluid
Automatic transmission fluid (ATF) 8-14
Brake fluid 8-16
Capacities and recommended fuel/lubricants 9-2
Clutch fluid 8-16
Engine coolant 8-9
Engine oil 8-10
Power steering fluid 8-15
Window washer fluid 8-17
F.M.V.S.S. certification label 9-11
Fog light switch 2-22
Front seats 1-2
Fuel
Capacities and recommended fuel/lubricants 9-2
Fuel economy 5-21
Fuel filler cap 3-11
Fuel filler lid 3-11
Fuel filler lid and cap 3-11
Fuel gauge 2-6
Fuel octane rating 9-4
Fuel recommendation 9-3
Fuses 8-28

G

Gas cap 3-11
Gauge
Engine coolant temperature gauge 2-5
Fuel gauge 2-6
Odometer 2-3
Speedometer 2-3
Tachometer 2-5
General maintenance 8-2
Glove box 2-28
Glove box lock 2-28

H

Hazard warning flasher switch 2-22
Head restraints 1-6
Headlight aiming adjustment 8-31
Headlight and turn signal switch 2-20
Headlights 8-30
Heater
  Heater and air conditioner controls 4-2
  Heater operation 4-4
Hood release 3-9
Horn 2-23
Hubs
  Auto-lock free-running hubs 5-22

I

Ignition switch 5-7
Important vehicle information label 9-11
In-cabin microfilter 8-23
Increasing fuel economy 5-21
Indicator lights and audible reminders
(See warning/indicator lights and audible reminders) 2-9
Inside mirror 3-13
Instrument brightness control 2-21
Instrument panel 2-2
Interior light 2-34
ISOFIX child restraints 1-39

J

Jump seat 1-6
Jump starting 6-9

K

Key 3-2
Keyless entry system
(See remote keyless entry system) 3-4

L

Labels
  Air conditioner specification label 9-12
  Emission control information label 9-12
  Engine serial number 9-11
  F.M.V.S.S. certification label 9-11
  Vehicle identification number (VIN) plate .9-10
  Warning labels (for SRS) 1-18
LATCH (Lower Anchors and Tethers for CHildren)
System 1-39
License plate
  Installing the license plate 9-13
Light
  Air bag warning light 1-18, 2-13
  Brake light (See stop light) 8-32
  Bulb check/instrument panel 2-9
  Bulb replacement 8-32
  Charge warning light 2-11
  Fog light switch 2-22
  Headlight aiming adjustment 8-31
  Headlight and turn signal switch 2-20
  Headlights 8-30
  Interior light 2-34
  Light bulbs 8-30
  Low tire pressure warning light 2-11
  Low washer fluid warning light 2-12
  Passenger supplemental air bag ON/OFF
  switch and light 1-16
  Spotlights (See map light) 2-35
  Warning/indicator lights and audible
  reminders 2-9
Lights
  Map lights 2-35
Lock
  Child safety rear door lock 3-4
  Door locks 3-2
  Glove box lock 2-28
  Power door locks 3-3
Low fuel warning light 2-11
Low tire pressure warning light 2-11
Low tire pressure warning system 5-3
Low washer fluid warning light 2-12
Luggage rack (see roof rack) 2-30
Luggage (See vehicle loading information) . .9-13

M

Maintenance
  General maintenance 8-2
  Inside the vehicle 8-3
  Maintenance precautions 8-5
  Outside the vehicle 8-2
  Seat belt maintenance 1-29
  Under the hood and vehicle 8-4
Malfunction indicator lamp (MIL) 2-14
Manual front seat adjustment 1-2
Manual windows 2-34
Map lights 2-35
Meters and gauges 2-3
  Instrument brightness control 2-21

Mirror
Inside mirror 3-13
Outside mirror control 3-13, 3-14
Outside mirrors 3-13
Vanity mirror 3-13
Multi-remote control system
(See remote keyless entry system) 3-4

O

Octane rating (See fuel octane rating) 9-4
Odometer 2-3
Oil
Capacities and recommended fuel/lubricants. 9-2
Changing engine oil 8-11
Changing engine oil filter. 8-13
Checking engine oil level. 8-10
Engine oil 8-10
Engine oil and oil filter recommendation . .9-5
Engine oil pressure low/engine coolant temperature high warning light. 2-11
Engine oil viscosity 9-5
Outside mirror control 3-13, 3-14
Outside mirrors 3-13
Overdrive switch 5-14, 5-15, 5-16
Overheat
If your vehicle overheats 6-11
Owner's manual order form 9-27
Owner's manual/service manual order information. 9-27

P

Parking
Parking brake check 8-26
Parking brake operation 5-18
Parking/parking on hills. 5-25
Passenger supplemental air bag ON/OFF switch and light 1-16
Power
Dual 12 volt power outlets 2-25
Power door locks. 3-3
Power outlet. 2-24
Power steering fluid. 8-15
Power steering system 5-26
Power windows 2-32
Rear power windows 2-33
Precautions
Maintenance precautions 8-5
On-pavement and off-road driving precautions 5-4
Precautions on child restraints. 1-30
Precautions on seat belt usage 1-20
Precautions on supplemental restraint system. 1-7
Precautions when starting and driving . . .5-2
Push starting 6-11

R

Radio
Car phone or CB radio 4-29
FM-AM radio with compact disc (CD) changer 4-16
FM-AM radio with compact disc (CD) player 4-12
Steering wheel audio control switch. . . .4-28
Readiness for inspection maintenance (I/M) test. 9-25
Rear power windows 2-33
Rear sliding window 2-34
Rear window defogger switch 2-19
Recorders
Event data 9-26
Refrigerant recommendation 9-6
Registering your vehicle in another country. .9-10
Remote keyless entry system 3-4
Reporting safety defects (US only) 9-25
Roof rack 2-30

S

Safety
Child safety rear door lock. 3-4
Reporting safety defects (US only) 9-25
Seat
Jump seat 1-6
Seat adjustment
Front manual seat adjustment 1-2
Seat belt
Infants and small children 1-23
Injured Person. 1-24
Larger children 1-23
Precautions on seat belt usage 1-20
Pregnant women 1-24
Seat belt extenders 1-29
Seat belt maintenance 1-29
Seat belts 1-20
Shoulder belt height adjustment. 1-26

Three-point type with retractor. 1-24
Two-point type without retractor. 1-27
Two-point type without retractor (rear center lap belt) 1-27
Seat belt warning light 2-13
Seats
Adjustment 1-2
Front seats 1-2
Manual front seat adjustment 1-2
Separate seats 8-44
Self-adjusting brakes 8-27
Service manual order form 9-27
Servicing air conditioner 4-9
Shift lock release 5-14
Shifting
Automatic transmission 5-11, 5-12
Manual transmission 5-17
Shoulder belt height adjustment 1-26
Spark plug replacement 8-20
Speedometer 2-3
Spotlights (See map light) 2-35
SRS warning label 1-18
Starting
Before starting the engine 5-8
Jump starting 6-9
Precautions when starting and driving . . .5-2
Push starting 6-11
Starting the engine 5-9
Steering
Power steering fluid. 8-15
Power steering system 5-26
Tilting steering wheel 3-12
Steering wheel audio control switch. 4-28
Step rail 3-10
Stop light 8-32
Storage 2-26
Supplemental air bag warning light. . .1-18, 2-13
Supplemental restraint system
Precautions on supplemental restraint system. 1-7
Supplemental restraint system (Supplemental air bag system) 1-7
Switch
Automatic power window switch 2-33
Fog light switch 2-22
Hazard warning flasher switch 2-22
Headlight and turn signal switch. 2-20
Ignition switch 5-7
Overdrive switch 5-14, 5-15, 5-16
Passenger supplemental air bag ON/OFF switch and light 1-16
Power door lock switch 3-3
Rear window defogger switch 2-19
Vehicle dynamic control (VDC) off switch 2-24
Windshield wiper and washer switch . . .2-18

T

Tachometer 2-5
Tailgate latch 3-15
Temperature gauge
Engine coolant temperature gauge 2-5
Engine oil pressure low/engine coolant temperature high warning light. 2-11
Three-way catalyst 5-2
Tie down hooks 3-17
Tilting steering wheel 3-12
Tire
Flat tire 6-2
Spare tire. 6-4, 8-44
Tire chains. 8-41
Tire placard 9-12
Tire pressure 8-35
Tire rotation 8-42
Tires of 4-wheel drive. 8-44
Types of tires 8-41
Uniform tire quality grading. 9-24
Wheels and tires 8-35
Wheel/tire size 9-8
Tire pressure
Low tire pressure warning light 2-11
Top tether strap child restraint 1-41
Towing
2-wheel drive models. 6-13
4-wheel drive models. 6-14
Flat towing. 9-23
Tow truck towing 6-12
Towing load/specification chart 9-20
Trailer towing 9-18
Transfer case 5-21
Transmission
Automatic transmission fluid (ATF) 8-14
Driving with automatic transmission 5-10
Driving with manual transmission 5-16
Selector lever lock release 5-14
Travel (See registering your vehicle in another country). 9-10
Truck - camper loading 9-15
Turn signal switch (See headlight and turn signal switch) 2-20, 2-22

U

Uniform tire quality grading. 9-24

V

Vanity mirror 3-13
Vehicle dimensions and weights 9-9
Vehicle dynamic control (VDC) off switch. . .2-24
Vehicle dynamic control (VDC) system 5-29
Vehicle identification 9-10
Vehicle identification number (VIN)
(Chassis number). 9-10
Vehicle identification number (VIN) plate . . .9-10
Vehicle loading information. 9-13
Vehicle recovery. 6-15
Vehicle security system. 2-16
Ventilators. 4-2

W

Warning
- Air bag warning light. 1-18, 2-13
- Anti-lock brake warning light. 2-10
- Battery charge warning light 2-11
- Brake warning light 2-10
- Door open warning light 2-11
- Engine oil pressure low/engine coolant temperature high warning light. 2-11
- Hazard warning flasher switch 2-22
- Low fuel warning light 2-11
- Low tire pressure warning light 2-11
- Low washer fluid warning light. 2-12
- Seat belt warning light 2-11
- Vehicle security system. 2-16
- Warning labels (for SRS). 1-18
- Warning/indicator lights and audible reminders 2-9

Warning lights 2-9
Washer switch
- Windshield wiper and washer switch . . .2-18

Weights (See dimensions and weights) 9-9
Wheels and tires 8-35
Wheel/tire size 9-8
When traveling or registering your vehicle in another country 9-10
Window washer fluid 8-17
Windows
- Locking passengers' windows. 2-33
- Manual windows 2-34
- Power windows 2-32
- Rear power windows 2-33
- Rear sliding window 2-34

Windshield wiper and washer switch 2-18
Wiper
- Windshield wiper and washer switch . . .2-18
- Wiper blades 8-25

RECOMMENDED FUEL:

For 2.4L/3.3L engine

Use unleaded regular gasoline with an octane rating of at least 87 AKI (Anti-Knock Index) number (Research octane number 91).

For 3.3L supercharger

Use unleaded premium gasoline with an octane rating of at least 91 AKI number (Research octane number 96).

If unleaded premium gasoline is not available, unleaded regular gasoline with an octane rating of at least 87 AKI (Research octane number 91) can be used, but only under the following precautions:

- have the fuel tank filled only partially with unleaded regular gasoline, and fill up with unleaded premium as soon as possible.
- avoid full throttle driving and abrupt acceleration

However, for maximum vehicle perfomance, the use of unleaded premium gasoline is recommended.

⚠ CAUTION

- **Using a fuel other than that specified could adversely affect the emission control system, and may also affect the warranty coverage.**
- **Under no circumstances should a leaded gasoline be used, because this will damage the three-way catalyst.**

For additional information, see “Capacities and recommended fuel/lubricants in the “Technical and consumer information” section.

RECOMMENDED ENGINE OIL:

- API Certification Mark
- API grade SG/SH Energy Conserving I & II or API grade SJ or SL Energy Conserving
- ILSAC grade GF-I, GF-II & GF-III
- 5W-30 Viscosity preferred

See “Engine oil and oil filter recommendation” in the “Technical and consumer information” section of this manual.

TIRE COLD PRESSURE:

See tire placard.

RECOMMENDED NEW VEHICLE BREAK-IN PROCEDURE:

During the first 1,200 miles (2,000 km) of vehicle use, follow the recommendations outlined in the “BREAK-IN SCHEDULE” information found in the “Starting and driving” section of this manual. Follow these recommendations for the future reliability and economy of your new vehicle. Failure to follow these recommendations may result in vehicle damage or shortened engine life.

QUICK REFERENCE

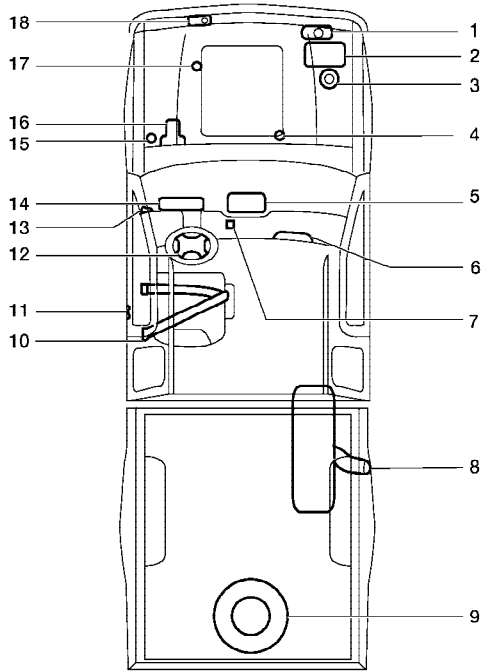

WGS0018

1. Engine coolant 8-9
2. Battery 8-17
3. Power steering fluid 8-15
4. Automatic transmission fluid 8-14
5. Heater and air conditioner 4-2; Audio system 4-10
6. Passenger supplemental air bag1-7
7. Passenger supplemental air bag on/off switch 1-16
8. Fuel filler cap 3-11; Fuel recommendations 9-3
9. Spare tire 6-2
10. Seat belts 1-20
11. Door locks 3-2
12. Driver supplemental air bag 1-7
13. Hood release 3-9
14. Meters and gauges 2-3
15. Clutch fluid 8-16
16. Brake fluid 8-16
17. Engine oil 8-10
18. Window washer fluid 8-17