2009

OWNER'S MANUAL

DODGE

CHARGER

VEHICLES SOLD IN CANADA

With respect to any Vehicles Sold in Canada, the name Chrysler LLC shall be deemed to be deleted and the name Chrysler Canada Inc. used in substitution therefor.

DRIVING AND ALCOHOL

Drunken driving is one of the most frequent causes of accidents.

Your driving ability can be seriously impaired with blood alcohol levels far below the legal minimum. If you are drinking, don't drive. Ride with a designated non-drinking driver, call a cab, a friend, or use public transportation.

WARNING!
Driving after drinking can lead to an accident. Your perceptions are less sharp, your reflexes are slower, and your judgment is impaired when you have been drinking. Never drink and then drive.

This manual illustrates and describes the operation of features and equipment that are either standard or optional on this vehicle. This manual may also include a description of features and equipment that are no longer available or were not ordered on this vehicle. Please disregard any features and equipment described in this manual that are not on this vehicle.

Chrysler LLC reserves the right to make changes in design and specifications, and/or make additions to or improvements to its products without imposing any obligation upon itself to install them on products previously manufactured.

Copyright © 2008 Chrysler LLC

TABLE OF CONTENTS

SECTION		PAGE
1	INTRODUCTION	3
2	THINGS TO KNOW BEFORE STARTING YOUR VEHICLE	9
3	UNDERSTANDING THE FEATURES OF YOUR VEHICLE	81
4	UNDERSTANDING YOUR INSTRUMENT PANEL	165
5	STARTING AND OPERATING	265
6	WHAT TO DO IN EMERGENCIES	355
7	MAINTAINING YOUR VEHICLE	377
8	MAINTENANCE SCHEDULES	431
9	IF YOU NEED CONSUMER ASSISTANCE	449
10	INDEX	459

INTRODUCTION

CONTENTS

■ Introduction 4
■ How To Use This Manual 4
■ Warnings And Cautions 6
■ Vehicle Identification Number 6
■ Vehicle Modifications/Alterations 7

INTRODUCTION

This Owner's Manual has been prepared with the assistance of service and engineering specialists to acquaint you with the operation and maintenance of your vehicle. It is supplemented by a Warranty Information Booklet and various customer-oriented documents. You are urged to read these publications carefully. Following the instructions and recommendations in this manual will help assure safe and enjoyable operation of your vehicle.

NOTE: After you read the manual, it should be stored in the vehicle for convenient referencing and remain with the vehicle when sold, so that the new owner will be aware of all safety warnings.

When it comes to service, remember that your authorized dealer knows your vehicle best, has the factory-trained technicians and genuine Mopar® parts, and is interested in your satisfaction.

HOW TO USE THIS MANUAL

Consult the Table of Contents to determine which section contains the information you desire.

The detailed index at the back of this Owner's Manual contains a complete listing of all subjects.

Consult the following table for a description of the symbols that may be used on your vehicle or throughout this Owner's Manual:

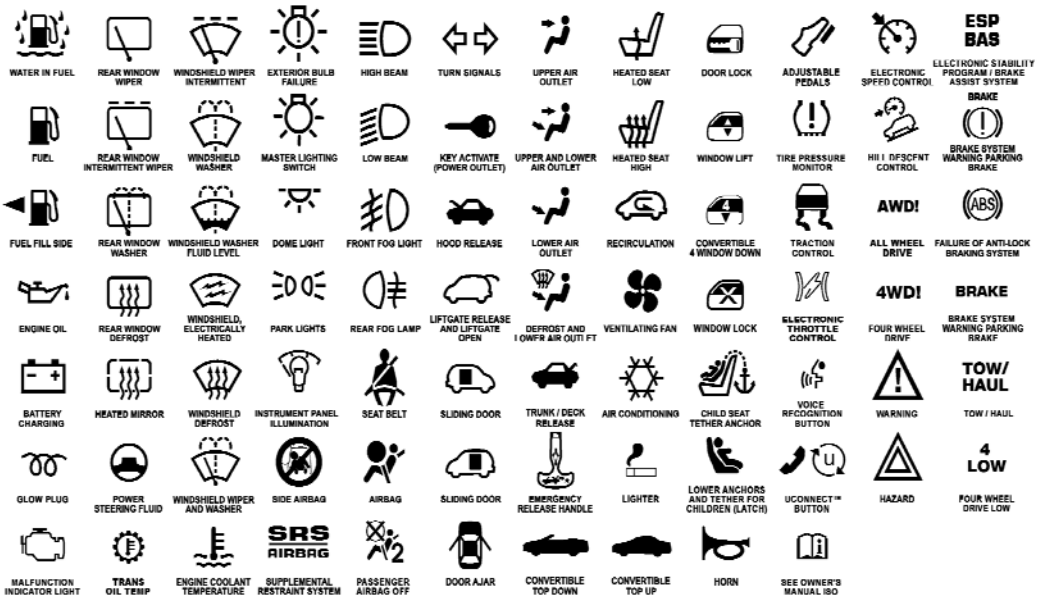
WATER IN FUEL
REAR WINDOW WIPER
WINDSHIELD WIPER INTERMITTENT
EXTERIOR BULB FAILURE
HIGH BEAM
TURN SIGNALS
UPPER AIR OUTLET
HEATED SEAT LOW
DOOR LOCK
ADJUSTABLE PEDALS
ELECTRONIC SPEED CONTROL
ESP BAS
ELECTRONIC STABILITY PROGRAM / BRAKE ASSIST SYSTEM
FUEL
REAR WINDOW INTERMITTENT WIPER
WINDSHIELD WASHER
MASTER LIGHTING SWITCH
LOW BEAM
KEY ACTIVATE (POWER OUTLET)
UPPER AND LOWER AIR OUTLET
HEATED SEAT HIGH
WINDOW LIFT
TIRE PRESSURE MONITOR
HILL DESCENT CONTROL
BRAKE
BRAKE SYSTEM WARNING PARKING BRAKE
FUEL FILL SIDE
REAR WINDOW WASHER
WINDSHIELD WASHER FLUID LEVEL
DOME LIGHT
FRONT FOG LIGHT
HOOD RELEASE
LOWER AIR OUTLET
RECIRCULATION
CONVERTIBLE 4 WINDOW DOWN
TRACTION CONTROL
AWD!
ALL WHEEL DRIVE
ABS
FAILURE OF ANTI-LOCK BRAKING SYSTEM
ENGINE OIL
REAR WINDOW DEFROST
WINDSHIELD, ELECTRICALLY HEATED
PARK LIGHTS
REAR FOG LAMP
LIFTGATE RELEASE AND LIFTGATE OPEN
DEFROST AND LOWER AIR OUTLET
VENTILATING FAN
WINDOW LOCK
ELECTRONIC THROTTLE CONTROL
4WD!
FOUR WHEEL DRIVE
BRAKE
BRAKE SYSTEM WARNING PARKING BRAKE
BATTERY CHARGING
HEATED MIRROR
WINDSHIELD DEFROST
INSTRUMENT PANEL ILLUMINATION
SEAT BELT
SLIDING DOOR
TRUNK / DECK RELEASE
AIR CONDITIONING
CHILD SEAT TETHER ANCHOR
VOICE RECOGNITION BUTTON
WARNING
TOW/ HAUL
TOW / HAUL
GLOW PLUG
POWER STEERING FLUID
WINDSHIELD WIPER AND WASHER
SIDE AIRBAG
AIRBAG
SLIDING DOOR
EMERGENCY RELEASE HANDLE
LIGHTER
LOWER ANCHORS AND TETHER FOR CHILDREN (LATCH)
UCONNECT™ BUTTON
HAZARD
4 LOW
FOUR WHEEL DRIVE LOW
MALFUNCTION INDICATOR LIGHT
TRANS OIL TEMP
ENGINE COOLANT TEMPERATURE
SRS AIRBAG
SUPPLEMENTAL RESTRAINT SYSTEM
PASSENGER AIRBAG OFF
DOOR AJAR
CONVERTIBLE TOP DOWN
CONVERTIBLE TOP UP
HORN
SEE OWNER'S MANUAL ISO

010505550

WARNINGS AND CAUTIONS

This Owner's Manual contains **WARNINGS** against operating procedures that could result in an accident or bodily injury. It also contains **CAUTIONS** against procedures that could result in damage to your vehicle. If you do not read this entire manual, you may miss important information. Observe all Warnings and Cautions.

VEHICLE IDENTIFICATION NUMBER

The Vehicle Identification Number (VIN) is on the left front corner of the instrument panel. The VIN is visible from outside of the vehicle through the windshield. This number also appears on the Automobile Information Disclosure Label affixed to a window on your vehicle, the vehicle registration, and the title.

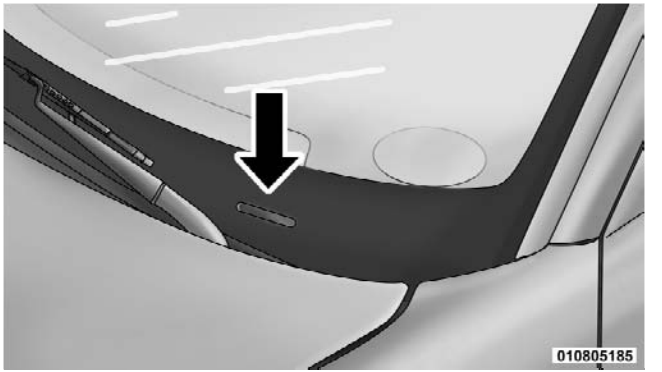

VIN Location

NOTE: It is illegal to remove the VIN.

VEHICLE MODIFICATIONS/ALTERATIONS

WARNING!

Any modifications or alterations to this vehicle could seriously affect its roadworthiness and safety and may lead to an accident resulting in serious injury or death.

THINGS TO KNOW BEFORE STARTING YOUR VEHICLE

CONTENTS

- A Word About Your Keys 12
  - Wireless Ignition Node (WIN) 12
  - FOB With Integrated Key 13
  - Ignition Key Removal 13
  - Key-In-Ignition Reminder 14
- Sentry Key® 15
  - Replacement Keys 16
  - Customer Key Programming 17
  - General Information 18
- Vehicle Security Alarm — If Equipped 18
  - Rearming Of The System 18
  - To Arm The System 18
  - To Disarm The System 19
- Remote Keyless Entry (RKE) 20
  - To Unlock The Doors 20
  - To Lock The Doors 23
  - To Unlatch The Trunk 24
  - Using The Panic Alarm 24

- Programming Additional Transmitters 24
- Transmitter Battery Service 25
- General Information 26

■ Remote Starting System — If Equipped 26
- How To Use Remote Start 27

■ Door Locks 29
- Manual Door Locks 29
- Power Door Locks 30
- Child Protection Door Lock 33

■ Windows 35
- Power Windows 35
- Wind Buffeting 39

■ Trunk Lock And Release 39

■ Trunk Safety Warning 40
- Trunk Emergency Release 41

■ Occupant Restraints 41
- Lap/Shoulder Belts 42
- Lap/Shoulder Belt Untwisting Procedure 48
- Seat Belt Pretensioners 49
- Enhanced Seat Belt Use Reminder System (BeltAlert®) 49
- Automatic Locking Mode — If Equipped 51
- Seat Belts And Pregnant Women 51
- Seat Belt Extender 52
- Driver And Front Passenger Supplemental Restraint System (SRS) - Airbag 52
- Event Data Recorder (EDR) 65

□ Child Restraints 67

■ Engine Break-In Recommendations 77

■ Safety Tips 78

□ Transporting Passengers 78

□ Exhaust Gas 78

□ Safety Checks You Should Make Inside The Vehicle 79

□ Periodic Safety Checks You Should Make Outside The Vehicle 80

A WORD ABOUT YOUR KEYS

Your vehicle uses a keyless ignition system. This system consists of a Fob with Integrated Key and a Wireless Ignition Node (WIN) with integral ignition switch. You can insert the double-sided integrated key into the ignition switch with either side up.

Wireless Ignition Node (WIN)

The Wireless Ignition Node (WIN) operates similar to an ignition switch. It has four operating positions, three with detents and one that is spring-loaded. The detent positions are LOCK, ACC, and ON. The START position is a spring-loaded momentary contact position. When released from the START position, the switch automatically returns to the ON position.

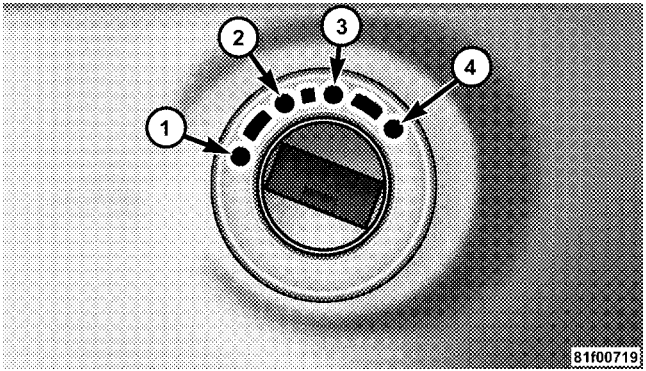

Wireless Ignition Node (WIN)

1 — LOCK
2 — ACC (ACCESSORY)
3 — ON
4 — START

Fob with Integrated Key

The Fob with Integrated Key (FOBIK) operates the ignition switch. It also contains the Remote Keyless Entry (RKE) transmitter and a valet key, which stores in the rear of the Fob.

The valet key allows for entry into the vehicle should the battery in the vehicle or the Fob go dead. The valet key is also for locking the glove box. You can keep the valet key with you when valet parking.

To remove the valet key from the Fob, slide the mechanical latch at the top of the Fob sideways with your thumb and then pull the key out of the Fob with your other hand.

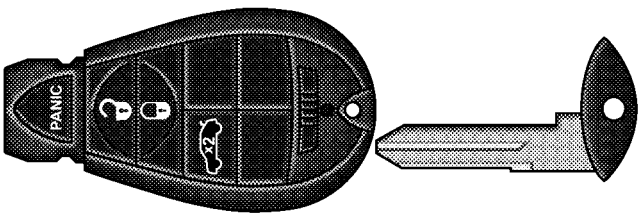

Valet Key Removal

NOTE: You can insert the double-sided valet key into the lock cylinders with either side up.

Ignition Key Removal

Place the shift lever in PARK. Turn the key to the LOCK position and then remove the key.

NOTE:

- For vehicles not equipped with the Electronic Vehicle Information Center (EVIC), the power window switches, radio, power sunroof (if equipped), and power outlets will remain active for 10 minutes after the ignition switch is turned to the LOCK position. Opening either front door will cancel this feature.
- For vehicles equipped with the EVIC, the power window switches, radio, power sunroof (if equipped), and power outlets will remain active for up to 60 minutes after the ignition switch is turned to the LOCK position. Opening either front door will cancel this feature. The time for this feature is programmable. Refer to "Delay Power Off to Accessories Until Exit," under "Personal Settings (Customer-Programmable Features)," under "Electronic Vehicle Information Center (EVIC) – If Equipped" in Section 4.

WARNING!

Never leave children alone in a vehicle. Leaving unattended children in a vehicle is dangerous for a number of reasons. A child or others could be seriously or fatally injured. Don't leave the key in the ignition. A child could operate power windows, other controls, or move the vehicle.

CAUTION!

An unlocked car is an invitation to thieves. Always remove the key from the ignition and lock all doors when leaving the vehicle unattended.

Key-In-Ignition Reminder

If you open the driver's door and the key is in the ignition, a chime will sound to remind you to remove the key.

NOTE: The Key-In-Ignition reminder only sounds when the ignition key is placed in the LOCK or ACC position.

SENTRY KEY®

The Sentry Key® Immobilizer system prevents unauthorized vehicle operation by disabling the engine. The system does not need to be armed or activated. Operation is automatic, regardless of whether the vehicle is locked or unlocked.

The system uses the factory-mated Remote Keyless Entry (RKE) transmitter with integrated key and Wireless Ignition Node (WIN) to prevent unauthorized vehicle operation. Therefore, only RKE transmitters that are programmed to the vehicle can be used to start and operate the vehicle. The system will shut the engine off in two seconds if an invalid RKE transmitter is used to start the engine.

After turning the ignition switch to the ON position, the Vehicle Security Light will turn on for three seconds for a bulb check. If the light remains on after the bulb check, it indicates that there is a problem with the electronics. In addition, if the light begins to flash after the bulb check, it indicates that someone used an invalid RKE transmitter to start the engine. Either of these conditions will result in the engine being shut off after two seconds.

If the Vehicle Security Light turns on during normal vehicle operation (vehicle running for longer than 10 seconds), it indicates that there is a fault in the electronics. Should this occur, have the vehicle serviced as soon as possible.

NOTE:

- The Sentry Key® Immobilizer system is not compatible with aftermarket remote starting systems. Use of these systems may result in vehicle starting problems and loss of security protection.

- Exxon/Mobil Speedpass™, additional RKE transmitters, or any other transponder-equipped components on the same key chain **will not** cause a fault unless the additional part is **physically held against the RKE transmitter** being used to start the vehicle. Cell phones, pagers, or other Radio Frequency (RF) electronics will not cause interference with this system.

All of the RKE transmitters provided with your new vehicle have been programmed to the vehicle electronics.

Replacement Keys

NOTE: Only RKE transmitters that are programmed to the vehicle electronics can be used to start and operate the vehicle. Once an RKE transmitter is programmed to a vehicle, it cannot be programmed to any other vehicle.

CAUTION!

Always remove the keys from the vehicle and lock all doors when leaving the vehicle unattended.

At the time of purchase, the original owner is provided with a four-digit Personal Identification Number (PIN). Keep the PIN in a secure location. This number is required for authorized dealer replacement of RKE transmitters. Duplication of RKE transmitters may be performed at an authorized dealer or by using the Customer Key Programming procedure. This procedure consists of programming a blank RKE transmitter to the vehicle electronics. A blank RKE transmitter is one that has never been programmed.

NOTE: When having the Sentry Key® Immobilizer system serviced, bring all vehicle RKE transmitters with you to an authorized dealer.

Customer Key Programming

If you have two valid RKE transmitters with integrated keys, you can program new RKE transmitters to the system by performing the following procedure:

1. Insert the first valid integrated key into the ignition switch and turn the ignition switch to the ON position for at least three seconds, but no longer than 15 seconds. Turn the ignition switch to the LOCK position and remove the first key.

2. Insert the second valid integrated key and turn the ignition switch to the ON position within 15 seconds. After 10 seconds, a chime will sound and the Vehicle Security Light will begin to flash. Turn the ignition switch to the LOCK position and remove the second key.

3. Insert a blank integrated key into the ignition switch and turn the ignition switch to the ON position within 60 seconds. After 10 seconds, a single chime will sound and the Vehicle Security Light will stop flashing, turn on again for three seconds, and then turn off.

The new integrated key is programmed. **The Remote Keyless Entry (RKE) transmitter will also be programmed during this procedure.**

Repeat this procedure to program up to eight keys. If you do not have a programmed RKE transmitter with integrated key, contact your authorized dealer for details.

NOTE: If a programmed key is lost, see your authorized dealer to have all remaining keys erased from the system's memory. This will prevent the lost key from starting your vehicle. The remaining keys must then be reprogrammed. All vehicle keys must be taken to an authorized dealer at the time of service to be reprogrammed.

General Information

The Sentry Key® system complies with FCC rules Part 15 and with RSS-210 of Industry Canada. Operation is subject to the following conditions:

- This device may not cause harmful interference.
- This device must accept any interference that may be received, including interference that may cause undesired operation.

VEHICLE SECURITY ALARM — IF EQUIPPED

The Vehicle Security Alarm monitors the vehicle doors for unauthorized entry and the ignition switch for unauthorized operation. If something triggers the alarm, the Vehicle Security Alarm will prevent the vehicle from starting and provide the following audible and visible signals: the horn will pulse; the headlights will flash; the park lights will flash; and the Vehicle Security Light in the instrument cluster will flash.

Rearming of the System

If something triggers the alarm, and no action is taken to disarm it, the Vehicle Security Alarm will turn the horn off after three minutes, turn all of the visual signals off after 15 minutes, and then the Vehicle Security Alarm will rearm itself.

To Arm the System

Remove the key from the ignition switch and either press a power door LOCK switch while the driver or passenger door is open or press the LOCK button on the Remote Keyless Entry (RKE) transmitter. After the last door is closed, or if all doors are closed, the Vehicle Security Alarm will arm itself in about 16 seconds. During that time, the Vehicle Security Light will flash. If it does not illuminate, the Vehicle Security Alarm is not arming. In addition, if you open a door during the arming period,

the Vehicle Security Alarm will cancel the arming process. If you wish to rearm the Vehicle Security Alarm after closing the door, you must repeat one of the previously-described arming sequences.

To Disarm the System

Either press the UNLOCK button on the RKE transmitter or insert a valid ignition key into the ignition switch and turn the key to the ON position.

NOTE:

- The driver's door key cylinder and the trunk button on the RKE transmitter cannot arm or disarm the Vehicle Security Alarm.
- The Vehicle Security Alarm remains armed during trunk entry. Pressing the TRUNK button will not disarm the Vehicle Security Alarm. If someone enters the vehicle through the trunk, and opens any door, the alarm will sound.
- When the Vehicle Security Alarm is armed, the interior power door lock switches will not unlock the doors.

The Vehicle Security Alarm is designed to protect your vehicle; however, you can create conditions where the Vehicle Security Alarm will give you a false alarm. If one of the previously-described arming sequences has occurred, the Vehicle Security Alarm will arm regardless of whether you are in the vehicle or not. If you remain in the vehicle and open a door, the alarm will sound. If this occurs, disarm the Vehicle Security Alarm.

If the Vehicle Security Alarm is armed and the battery becomes disconnected the Vehicle Security Alarm will remain armed when the battery is reconnected. The exterior lights will flash, the horn will sound, and the ignition will not start the vehicle. If this occurs, disarm the Vehicle Security Alarm.

Tamper Alert

If something has triggered the Vehicle Security Alarm in your absence, the horn will sound three times when you disarm the Vehicle Security Alarm. Check the vehicle for tampering.

REMOTE KEYLESS ENTRY (RKE)

The RKE system allows you to lock or unlock the doors, open the trunk, or activate the Panic Alarm from distances up to approximately 66 ft (20 m) using a handheld radio RKE transmitter with integrated key. The RKE transmitter need not be pointed at the vehicle to activate the system.

NOTE: Inserting the RKE transmitter with integrated key into the ignition switch disables all buttons on that RKE transmitter; however, the buttons on the remaining RKE transmitters will continue to work. Driving at speeds 5 mph (8 km/h) and above disables all RKE transmitter buttons for all RKE transmitters.

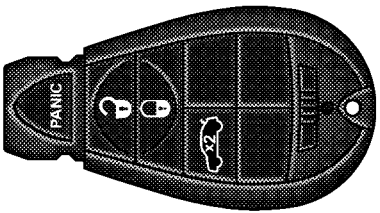

81c6782c

RKE Transmitter with Integrated Key

To Unlock the Doors

Press and release the UNLOCK button on the RKE transmitter once to unlock the driver's door, or twice within five seconds to unlock all doors. The turn signal lights will flash to acknowledge the unlock signal. The illuminated entry system will also turn on.

Remote Key Unlock, Driver Door/All Doors 1st Press

This feature lets you program the system to unlock either the driver's door or all doors on the first press of the UNLOCK button on the RKE transmitter. To change the current setting, proceed as follows:

- For vehicles equipped with the Electronic Vehicle Information Center (EVIC), refer to "Remote Key Unlock," under "Personal Settings (Customer-Programmable Features)," under "Electronic Vehicle Information Center (EVIC) –If Equipped" in Section 4.
- For vehicles not equipped with the EVIC, perform the following procedure:

1. Press and hold the LOCK button on a programmed RKE transmitter for at least four seconds, but no longer than 10 seconds. Then, press and hold the UNLOCK button while still holding the LOCK button.

2. Release both buttons at the same time.

3. Test the feature while outside of the vehicle by pressing the LOCK/UNLOCK buttons on the RKE transmitter with the ignition switch in the LOCK position and the key removed.

4. Repeat these steps if you want to return this feature to its previous setting.

NOTE: Pressing the LOCK button on the RKE transmitter while you are inside the vehicle will activate the security alarm. Opening a door with the Vehicle Security Alarm activated will cause the alarm to sound. Press the UNLOCK button to deactivate the security alarm.

Flash Lights with Remote Key Lock
This feature will cause the turn signal lights to flash when the doors are locked or unlocked with the RKE transmitter. This feature can be turned on or turned off. To change the current setting, proceed as follows:

- For vehicles equipped with the EVIC, refer to "Flash Lights with Remote Key Lock," under "Personal Settings (Customer-Programmable Features)" under "Electronic Vehicle Information Center (EVIC) – If Equipped" in Section 4.
- For vehicles not equipped with the EVIC, perform the following procedure:

1. Press and hold the UNLOCK button on a programmed RKE transmitter for at least four seconds, but no longer than 10 seconds. Then, press and hold the LOCK button while still holding the UNLOCK button.

2. Release both buttons at the same time.

3. Test the feature while outside of the vehicle by pressing the LOCK/UNLOCK buttons on the RKE transmitter with the ignition switch in the LOCK position and the key removed.

4. Repeat these steps if you want to return this feature to its previous setting.

NOTE: Pressing the LOCK button on the RKE transmitter while you are in the vehicle will activate the security alarm. Opening a door with the security alarm activated will cause the alarm to sound. Press the UNLOCK button to deactivate the security alarm.

Turn Headlights On with Remote Key Unlock
This feature activates the headlights for up to 90 seconds when the doors are unlocked with the RKE transmitter. The time for this feature is programmable on vehicles equipped with the EVIC. Refer to "Turn Headlights On with Remote Key Unlock," under "Personal Settings

(Customer-Programmable Features)" under "Electronic Vehicle Information Center (EVIC) – If Equipped" in Section 4.

To Lock the Doors

Press and release the LOCK button on the RKE transmitter to lock all doors. The turn signal lights will flash and the horn will chirp to acknowledge the signal.

Sound Horn with Remote Key Lock

This feature will cause the horn to chirp when the doors are locked with the RKE transmitter. This feature can be turned on or turned off. To change the current setting, proceed as follows:

- For vehicles equipped with the EVIC, refer to "Sound Horn with Remote Key Lock," under "Personal Settings (Customer-Programmable Features)" under "Electronic Vehicle Information Center (EVIC) – If Equipped" in Section 4.
- For vehicles not equipped with the EVIC, perform the following procedure:

1. Press the LOCK button on a programmed RKE transmitter for at least four seconds, but no longer than 10 seconds. Then, press the PANIC button while still holding the LOCK button.

2. Release both buttons at the same time.

3. Test the feature while outside of the vehicle by pressing the LOCK button on the RKE transmitter with the ignition switch in the LOCK position and the key removed.

4. Repeat these steps if you want to return this feature to its previous setting.

NOTE: Pressing the LOCK button on the RKE transmitter while you are in the vehicle will activate the security

alarm. Opening a door with the security alarm activated will cause the alarm to sound. Press the UNLOCK button to deactivate the security alarm.

To Unlatch the Trunk

Press the TRUNK button on the RKE transmitter two times within five seconds to unlatch the trunk.

Using the Panic Alarm

To turn the Panic Alarm feature on or off, press and hold the PANIC button on the RKE transmitter for at least one second and release. When the Panic Alarm is on, the headlights and park lights will flash, the horn will pulse on and off, and the interior lights will turn on.

The Panic Alarm will stay on for three minutes unless you turn it off by either pressing the PANIC button a second time or drive the vehicle at a speed of 15 mph (24 km/h) or greater.

NOTE:

- The interior lights will turn off if you turn the ignition switch to the ACC or ON position while the Panic Alarm is activated. However, the exterior lights and horn will remain on.
- You may need to be less than 35 ft (11 m) from the vehicle when using the RKE transmitter to turn off the Panic Alarm due to the radio frequency noises emitted by the system.

Programming Additional Transmitters

Refer to Sentry Key® “Customer Key Programming.”

If you do not have a programmed RKE transmitter, contact your authorized dealer for details.

Transmitter Battery Service

The recommended replacement battery is one CR2032 battery.

NOTE:

- Do not touch the battery terminals that are on the back housing or the printed circuit board.

1. Battery access is through a door located on the rear of the RKE transmitter. Insert a small, flat blade screwdriver into the slot and gently pry open the access door.

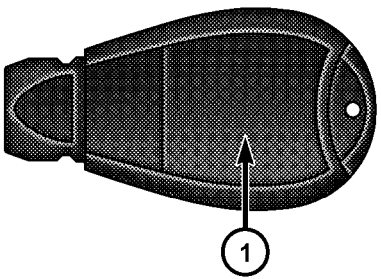

Battery Replacement

1— Battery Access Door

2. Remove and replace the batteries. Avoid touching the new batteries with your fingers. Skin oils may cause battery deterioration. If you touch a battery, clean it with rubbing alcohol.

3. Reposition the access door panel over the battery opening and snap into place.

General Information

This device complies with Part 15 of the FCC rules and RSS 210 of Industry Canada. Operation is subject to the following conditions:

- This device may not cause harmful interference.
- This device must accept any interference received, including interference that may cause undesired operation.

NOTE: Changes or modifications not expressly approved by the party responsible for compliance could void the user's authority to operate the equipment.

If your RKE transmitter fails to operate from a normal distance, check for these two conditions:

1. A weak battery in the RKE transmitter. The expected life of the battery is a minimum of three years.

2. Closeness to a radio transmitter such as a radio station tower, airport transmitter, and some mobile or CB radios.

REMOTE STARTING SYSTEM — IF EQUIPPED

This system uses the Remote Keyless Entry (RKE) transmitter to start the engine conveniently from outside the vehicle while still maintaining security. The system has a range of 328 ft (100 m).

NOTE: The vehicle must be equipped with an automatic transmission to be equipped with Remote Start.

How to Use Remote Start

All of the following conditions must be met before the engine will remote start:

- Shift lever in PARK
- Doors closed
- Hood closed
- Trunk closed
- Hazard switch off
- Brake switch inactive (brake pedal not pressed)
- Ignition key removed from ignition switch
- Battery at an acceptable charge level
- RKE PANIC button not pressed

To Enter Remote Start Mode

Press and release the REMOTE START button on the RKE transmitter twice, within five seconds. The parking lights will flash and the horn will chirp twice (if programmed). Then, the engine will start and the vehicle will remain in the Remote Start mode for a 15-minute cycle.

NOTE:

- The park lamps will turn on and remain on during Remote Start mode.
- For security, power window and power sunroof operation (if equipped) are disabled when the vehicle is in the Remote Start mode.
- The engine can be started two consecutive times (two 15-minute cycles) with the RKE transmitter. However, the ignition switch must be cycled to the ON position before you can repeat the start sequence for a third cycle.

To Exit Remote Start Mode without Driving the Vehicle

Press and release the REMOTE START button one time, or allow the engine to run for the entire 15-minute cycle.

NOTE: To avoid unintentional shut downs, the system will disable the one time press of the REMOTE START button for two seconds after receiving a valid Remote Start request.

To Exit Remote Start Mode and Drive the Vehicle

Before the end of the 15-minute cycle, press and release the UNLOCK button on the RKE transmitter to unlock the doors and disarm the Vehicle Security Alarm (if equipped). Then, prior to the end of the 15-minute cycle, insert the key into the ignition switch and turn the switch to the ON position.

NOTE:

- The ignition switch must be in the ON position in order to drive the vehicle.
- For vehicles equipped with the Electronic Vehicle Information Center (EVIC), the message “Insert Key/ Turn To Run” will flash in the EVIC until you insert the key. Once inserted, the message “Turn To Run” will flash in the EVIC until you turn the key to run.

DOOR LOCKS

Manual Door Locks

To lock each door, push the door lock plunger on each door trim panel downward. To unlock each door, pull the door lock plunger on each door trim panel upward.

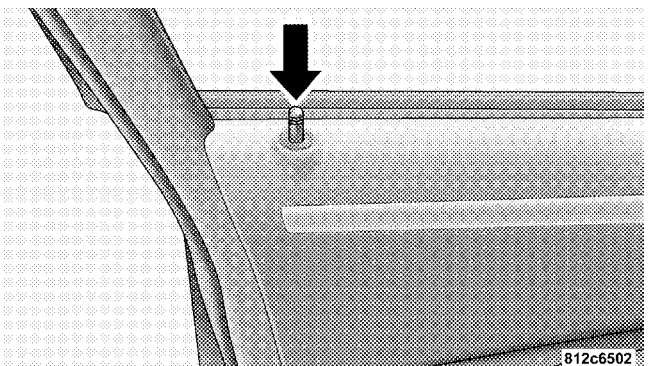

Door Lock Plunger

If the door lock plunger is down when you shut the door, the door will lock. Therefore, make sure the key is not inside the vehicle before closing the door.

WARNING!

- **For personal security and safety in the event of an accident, lock the vehicle doors before you drive as well as when you park and leave the vehicle.**
- **When leaving the vehicle, always remove the key from the ignition and lock your vehicle. Unsupervised use of vehicle equipment may cause severe personal injuries and death.**
- **Never leave children alone in a vehicle. Leaving unattended children in a vehicle is dangerous for a number of reasons. A child or others could be seriously or fatally injured. Don't leave the key in the ignition. A child could operate power windows, other controls, or move the vehicle.**

Power Door Locks

A power door lock switch is on each front door trim panel. Use this switch to lock or unlock the doors.

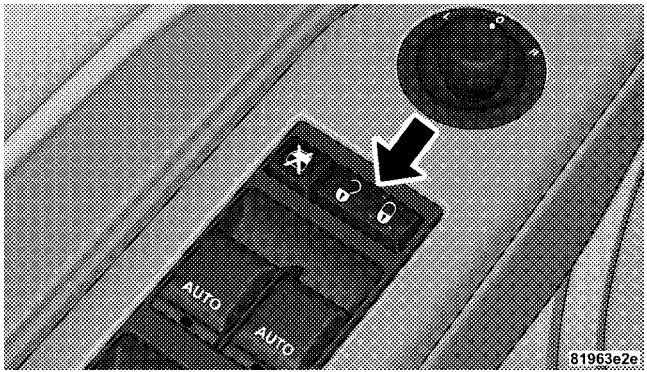

Power Door Lock Switch

If you press the power door lock switch while the key is in the ignition, and any front door is open, the power locks will not operate. This prevents you from accidentally locking the key in the vehicle. Removing the key or closing the door will allow the locks to operate. If a door is open, the key is in the ignition, and the ignition is in the LOCK or ACC position, a chime will sound as a reminder to remove the key.

Automatic Door Locks

The doors will lock automatically on vehicles with power door locks if all of the following conditions are met:

1. The Automatic Door Locks feature is enabled.
2. The transmission is in gear.
3. All doors are closed.
4. The throttle is pressed.
5. The vehicle speed is above 15 mph (24 km/h).

6. The doors were not previously locked using the power door lock switch or Remote Keyless Entry (RKE) transmitter.

Automatic Door Locks Programming
The Automatic Door Locks feature can be enabled or disabled as follows:

- For vehicles equipped with the Electronic Vehicle Information Center (EVIC), refer to "Lock Doors Automatically at 15 mph (24 km/h)" under "Personal Settings (Customer-Programmable Features)" in the "Electronic Vehicle Information Center (EVIC) — If Equipped," in Section 4 of this manual.
- For vehicles not equipped with the EVIC, perform the following procedure:

1. Close all doors and place the key in the ignition switch.

2. Cycle the ignition switch between LOCK and ON and then back to LOCK four times ending up in the LOCK position (do not start the engine).

3. Depress the power door LOCK switch to lock the doors.

4. A single chime will indicate the completion of the programming.

5. Repeat these steps if you want to return this feature to its previous setting.

NOTE: Use the Automatic Door Locks feature in accordance with local laws.

Automatic Unlock Doors on Exit
The doors will unlock automatically on vehicles with power door locks if:

1. The Automatic Unlock Doors On Exit feature is enabled.

2. The transmission was in gear and the vehicle speed returned to 0 mph (0 km/h).

3. The transmission is in NEUTRAL or PARK.

4. The driver door is opened.

5. The doors were not previously unlocked.

6. The vehicle speed is 0 mph (0 km/h).

Automatic Unlock Doors on Exit Programming
The Automatic Unlock Doors On Exit feature can be enabled or disabled as follows:

- For vehicles equipped with the EVIC, refer to "Unlock Doors Automatically on Exit" under "Personal Settings (Customer-Programmable Features)" in the "Electronic Vehicle Information Center (EVIC) — If Equipped," in Section 4 of this manual.
- For vehicles not equipped with the EVIC, perform the following procedure:

1. Close all doors and place the key in the ignition.

2. Cycle the ignition switch between LOCK and ON and then back to LOCK four times ending up in the LOCK position (do not start the engine).

3. Depress the power door UNLOCK switch to unlock the doors.

4. A single chime will indicate the completion of the programming.

5. Repeat these steps if you want to return this feature to its previous setting.

NOTE: Use the Automatic Unlock Doors On Exit feature in accordance with local laws.

Child Protection Door Lock

To provide a safer environment for small children riding in the rear seats, the rear doors are equipped with a Child Protection Door Lock system.

To Engage the Child Protection Door Lock System

1. Open the rear door.

2. Insert the tip of the valet key (or similar object) into the child lock control and pull it upward.

NOTE: For valet key information, refer to "A Word About Your Keys" in this section.

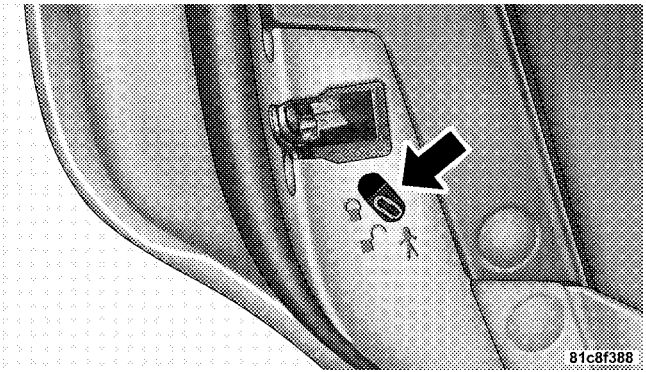

Child Lock Control

3. Repeat Steps 1 and 2 for the opposite rear door.

NOTE: When the Child Protection Door Lock system is engaged, the door can be opened only by using the outside door handle even though the inside door lock is in the unlocked position.

WARNING!

Avoid trapping anyone in a vehicle in a collision. Remember that the rear doors can only be opened from the outside when the child protection locks are engaged. Failure to follow this warning may result in serious injury or death.

NOTE:

- After engaging the Child Protection Door Lock system, always test the door from the inside to make certain it is in the desired position.
- For emergency exit with the system engaged, move the door lock plunger to the UNLOCK position, roll down the window and open the door with the outside door handle.

To Disengage the Child Protection Door Lock System

1. Open the rear door.
2. Insert the tip of the valet key (or similar object) into the child lock control and pull it downward.

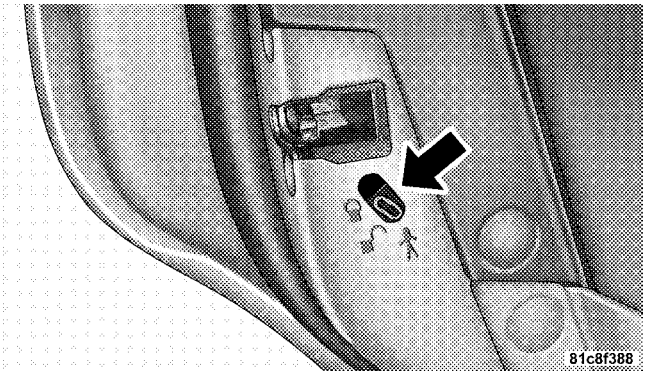

Child Lock Control

3. Repeat Steps 1 and 2 for the opposite rear door.

NOTE: After disengaging the Child Protection Door Lock system, always test the door from the inside to make certain it is in the desired position.

WINDOWS

Power Windows

The window controls on the driver's door control all the door windows.

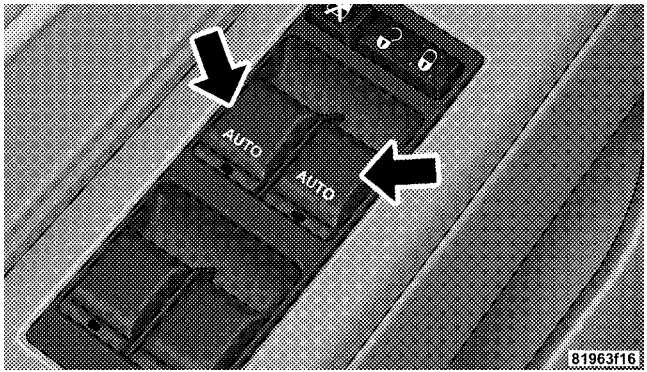

Power Window Switches

There are single window controls on each passenger door trim panel, which operate the passenger door windows. The window controls will operate only when the ignition switch is in the ON or ACC position.

WARNING!

Never leave children in a vehicle with the key in the ignition switch. Occupants, particularly unattended children, can become entrapped by the windows while operating the power window switches. Such entrapment may result in serious injury or death.

AUTO-Down Feature

The driver door power window switch and some model passenger door power window switches have an AUTO-down feature. Press the window switch to the second detent, release, and the window will go down automatically.

To open the window part way, press the window switch to the first detent and release it when you want the window to stop.

To stop the window from going all the way down during the AUTO-down operation, pull up on the switch briefly.

For vehicles not equipped with the Electronic Vehicle Information Center (EVIC), the power window switches will remain active for 10 minutes after the ignition switch is turned to the LOCK position. Opening either front door will cancel this feature.

For vehicles equipped with the EVIC, the power window switches will remain active for up to 60 minutes after the ignition switch is turned to the LOCK position. Opening either front door will cancel this feature. The time is programmable. Refer to "Delay Power Off to Accessories Until Exit," under "Personal Settings (Customer-Programmable Features)" in the "Electronic Vehicle Information Center (EVIC)," in Section 4 of this manual.

AUTO-Up Feature with Anti–Pinch Protection — If Equipped

Lift the window switch to the second detent, release, and the window will go up automatically.

To stop the window from going all the way up during the AUTO-up operation, push down on the switch briefly.

To close the window part way, lift the window switch to the first detent and release it when you want the window to stop.

For vehicles not equipped with the EVIC, the power window switches will remain active for 10 minutes after the ignition switch is turned to the LOCK position. Opening either front door will cancel this feature.

For vehicles equipped with the EVIC, the power window switches will remain active for up to 60 minutes after the ignition switch is turned to the LOCK position. Opening either front door will cancel this feature. The time is programmable. Refer to "Delay Power Off to Accessories Until Exit," under "Personal Settings (Customer-Programmable Features)" in the "Electronic Vehicle Information Center (EVIC)," in Section 4 of this manual.

NOTE:

- If the window runs into any obstacle during auto-closure, it will reverse direction and then stop. Remove the obstacle and use the window switch again to close the window.
- Any impact due to rough road conditions may trigger the auto-reverse function unexpectedly during auto-closure. If this happens, pull the switch lightly to the first detent and hold to close the window manually.

WARNING!

There is no anti-pinch protection when the window is almost closed. Be sure to clear all objects from the window before closing.

Window Lockout Switch

The window lockout switch on the driver's door trim panel allows you to disable the window controls on the passenger doors. To disable the window controls, press and release the window lockout button (setting it in the DOWN position). To enable the window controls, press and release the window lockout button again (setting it in the UP position).

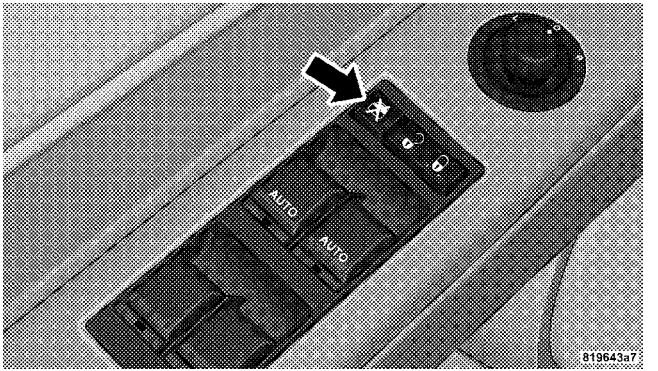

Window Lockout Switch

Reset

Anytime the vehicle battery is disconnected or goes dead, the AUTO-up function will be disabled. To reactivate the AUTO-up feature, perform the following procedure after vehicle power is restored:

1. Pull the window switch up to close window completely and continue to hold the switch up for an additional two seconds after the window is closed.

Wind Buffeting

Wind buffeting can be described as the perception of pressure on the ears or a helicopter type sound in the ears. Your vehicle may exhibit wind buffeting with the windows down, or the sunroof (if equipped) in certain open or partially open positions. This is a normal occurrence and can be minimized. If the buffeting occurs with the rear windows open, then open the front and rear windows together to minimize the buffeting. If the buffeting occurs with the sunroof open, then adjust the sunroof opening to minimize the buffeting.

TRUNK LOCK AND RELEASE

The trunk lid can be released from inside the vehicle by pressing the TRUNK RELEASE button located on the instrument panel to the left of the steering wheel.

NOTE: The transmission must be in PARK before the switch will operate.

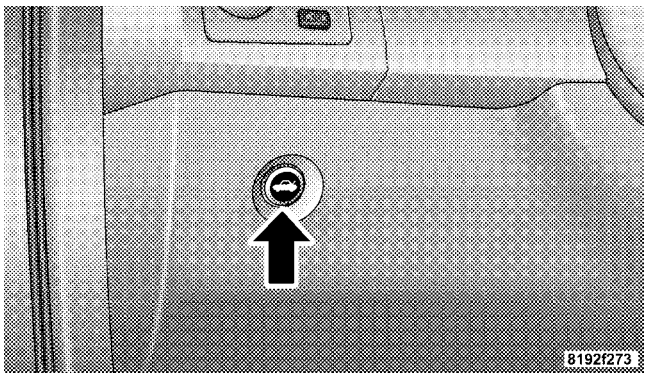

Trunk Release Button

The trunk lid can be released from outside the vehicle by pressing the TRUNK button on the Remote Keyless Entry (RKE) transmitter twice within five seconds.

With the ignition switch in the ON position, the Trunk Open symbol will display in the instrument cluster indicating that the trunk is open. The odometer display will reappear once the trunk is closed.

With the ignition switch in the LOCK position or the key removed from the ignition switch, the Trunk Open symbol will display until the trunk is closed.

TRUNK SAFETY WARNING

WARNING!

Do not allow children to have access to the trunk, either by climbing into the trunk from outside, or through the inside of the vehicle. Always close the trunk lid when your vehicle is unattended. Once in the trunk, young children may not be able to escape, even if they entered through the rear seat. If trapped in the trunk, children can die from suffocation or heat stroke.

Trunk Emergency Release

The trunk of your vehicle is equipped with an emergency release handle. It is located on the inside of the trunk lid, near the latch, and is coated so that it glows in a darkened trunk. Pull on the handle to open the trunk.

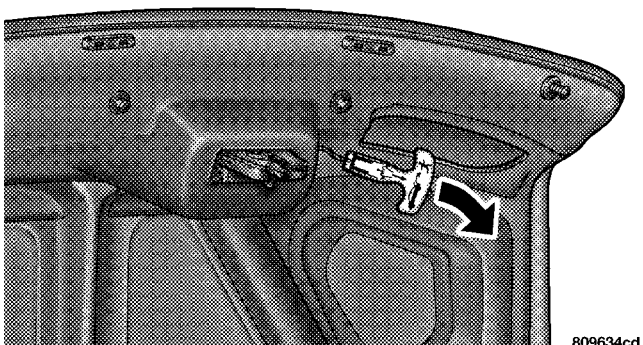

Trunk Emergency Release

OCCUPANT RESTRAINTS

Some of the most important safety features in your vehicle are the restraint systems. These include the front and rear seat belts for the driver and all passengers, the front airbags for both the driver and front passenger, the optional supplemental side curtain airbags for the driver and passengers seated next to a window, and the optional supplemental front seat mounted side airbags. If you will be carrying children too small for adult-size belts, your seat belts also can be used to hold infant and child restraint systems.

Please pay close attention to the information in this section. It tells you how to use your restraint system properly to keep you and your passengers as safe as possible.

WARNING!

In a collision, you and your passengers can suffer much greater injuries if you are not properly buckled up. You can strike the interior of your vehicle or other passengers or you can be thrown out of the vehicle. Always be sure you and others in your vehicle are buckled up properly.

Buckle up even though you are an excellent driver, even on short trips. Someone on the road may be a poor driver and cause a collision that includes you. This can happen far away from home or on your own street.

Research has shown that seat belts save lives, and they can reduce the seriousness of injuries in a collision. Some of the worst injuries happen when people are thrown from the vehicle. Seat belts reduce the possibility of ejection and the risk of injury caused by striking the inside of the vehicle. **Everyone in a motor vehicle should be belted at all times.**

Lap/Shoulder Belts

All seating positions in your vehicle are equipped with lap/shoulder belts.

The belt webbing retractor is designed to lock during very sudden stops or impacts. This feature allows the shoulder part of the belt to move freely with you under normal conditions. However, in a collision, the belt will lock and reduce your risk of striking the inside of the vehicle or being thrown out.

WARNING!

- **It is extremely dangerous to ride in a cargo area, inside or outside of a vehicle. In a collision, people riding in these areas are more likely to be seriously injured or killed.**
- **Do not allow people to ride in any area of your vehicle that is not equipped with seats and seat belts.**
- **Be sure everyone in your vehicle is in a seat and using a seat belt properly.**
- **Wearing a seat belt incorrectly is dangerous. Seat belts are designed to go around the large bones of your body. These are the strongest parts of your body and can take the forces of a collision best.**

(Continued)

WARNING! (Continued)

- **Wearing your belt in the wrong place could make your injuries in a collision much worse. You might suffer internal injuries, or you could even slide out of part of the belt. Follow these instructions to wear your seat belt safely and to keep your passengers safe, too.**
- **Two people should never be belted into a single seat belt. People belted together can crash into one another in an accident, hurting one another badly. Never use a lap/shoulder belt or a lap belt for more than one person, no matter what their size.**

Lap/Shoulder Belt Operating Instructions

1. Enter the vehicle and close the door. Sit back and adjust the front seat.

2. The seat belt latch plate is above the back of your seat. Grasp the latch plate and pull out the belt. Slide the latch plate up the webbing as far as necessary to make the belt go around your lap.

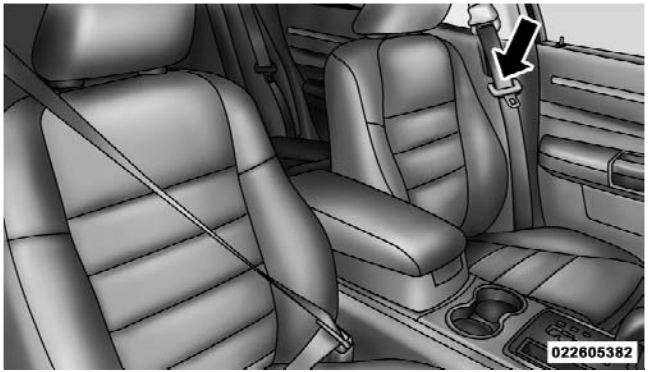

Pulling Out the Lap/Shoulder Belt Latch Plate

3. When the belt is long enough to fit, insert the latch plate into the buckle until you hear a "click."

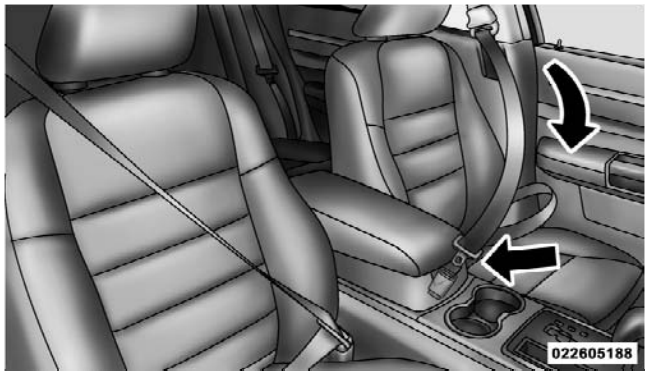

Inserting Latch Plate into Buckle

WARNING!

- **A belt that is buckled into the wrong buckle will not protect you properly. The lap portion could ride too high on your body, possibly causing internal injuries. Always buckle your belt into the buckle nearest you.**
- **A belt that is too loose will not protect you as well. In a sudden stop, you could move too far forward, increasing the possibility of injury. Wear your seat belt snugly.**
- **A belt that is worn under your arm is very dangerous. Your body could strike the inside surfaces of the vehicle in a collision, increasing head and neck injury. A belt worn under the arm can cause internal injuries. Ribs aren't as strong as shoulder bones. Wear the belt over your shoulder so that your strongest bones will take the force in a collision.**

(Continued)

WARNING! (Continued)

• A shoulder belt placed behind you will not protect you from injury during a collision. You are more likely to hit your head in a collision if you do not wear your shoulder belt. The lap and shoulder belt are meant to be used together.

4. Position the lap belt across your thighs, below your abdomen. To remove slack in the lap belt portion, pull up a bit on the shoulder belt. To loosen the lap belt if it is too tight, tilt the latch plate and pull on the lap belt. A snug belt reduces the risk of sliding under the belt in a collision.

Removing Slack from Belt

WARNING!

• A lap belt worn too high can increase the risk of internal injury in a collision. The belt forces won't be at the strong hip and pelvic bones, but across your abdomen. Always wear the lap belt as low as possible and keep it snug.
• A twisted belt can't do its job as well. In a collision, it could even cut into you. Be sure the belt is straight. If you can't straighten a belt in your vehicle, take it to your authorized dealer and have it fixed.

5. Position the shoulder belt on your chest so that it is comfortable and not resting on your neck. The retractor will withdraw any slack in the belt.

6. To release the belt, push the red button on the buckle. The belt will automatically retract to its stowed position. If necessary, slide the latch plate down the webbing to allow the belt to retract fully.

WARNING!

A frayed or torn belt could rip apart in a collision and leave you with no protection. Inspect the belt system periodically, checking for cuts, frays, or loose parts. Damaged parts must be replaced immediately. Do not disassemble or modify the system. Seat belt assemblies must be replaced after a collision if they have been damaged (bent retractor, torn webbing, etc.).

Adjustable Upper Shoulder Belt Anchorage

In the driver and front passenger seats, the shoulder belt can be adjusted upward or downward to position the belt away from your neck. Push and fully depress the button above the webbing to release the anchorage, then move it up or down to the position that fits you best.

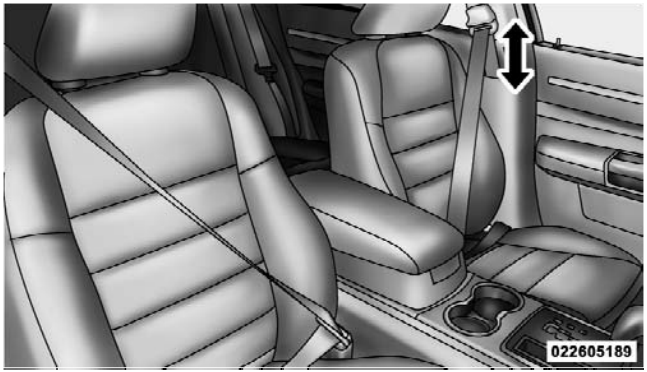

Adjusting Upper Shoulder Belt

As a guide, if you are shorter than average you will prefer a lower position, and if you are taller than average you will prefer a higher position. When you release the anchorage try to move it up and down to make sure that it is locked in position.

In the rear seat, move toward the center of the seat to position the belt away from your neck.

Lap/Shoulder Belt Untwisting Procedure

Use the following procedure to untwist a twisted lap/shoulder belt.

1. Position the latch plate as close as possible to the anchor point.

2. At about 6 to 12 in (15 to 30 cm) above the latch plate, grasp and twist the belt webbing 180 degrees to create a fold that begins immediately above the latch plate.

3. Slide the latch plate upward over the folded webbing. The folded webbing must enter the slot at the top of the latch plate.

4. Continue to slide the latch plate up until it clears the folded webbing.

Seat Belt Pretensioners

The seat belts for both front seating positions are equipped with pretensioning devices that are designed to remove any slack from the seat belts in the event of a collision. These devices improve the performance of the seat belt system by assuring that the belt is tight around the occupant in a collision. Pretensioners work for all size occupants, including those in child restraints.

NOTE: These devices are not a substitute for proper seat belt placement by the occupant. The seat belt still must be worn snugly and positioned properly.

The pretensioners are triggered by the Occupant Restraint Controller (ORC). (Refer to information on Airbags in this section). Like the front airbags, the pretensioners are single use items. After a collision that is severe enough to deploy the airbags and pretensioners, both must be replaced.

Enhanced Seat Belt Use Reminder System (BeltAlert®)

If the driver's seat belt has not been buckled within 60 seconds of starting the vehicle and if the vehicle speed is greater than 5 mph (8 km/h), the Enhanced Seat Belt Use Reminder System (BeltAlert®) will alert the driver to buckle their seat belt. The driver should also instruct all other occupants to buckle their seat belts. Once the warning is triggered, the BeltAlert® will continue to chime and flash the Seat Belt Reminder Light for 96 seconds or until the driver's seat belt is buckled. The

BeltAlert® will be reactivated if the driver's seat belt is unbuckled for more than 10 seconds and the vehicle speed is greater than 5 mph (8 km/h).

BeltAlert® Programming

The BeltAlert® can be enabled or disabled by your authorized dealer or by performing the following procedure:

NOTE: Chrysler LLC does not recommend deactivating the BeltAlert®.

1. With all doors closed, and the ignition switch in any position except ON or START, buckle the driver's seat belt.

2. Turn the ignition switch to the ON position, but do not start the engine. Wait for the Seat Belt Reminder Light to turn off and then proceed to the next step.

NOTE: You must perform the following steps within 60 seconds of turning the ignition switch to the ON position.

3. Within 60 seconds of turning the ignition switch to the ON position, unbuckle and then re-buckle the driver's seat belt at least three times within 10 seconds, ending with the seat belt buckled.

NOTE: Watch for the Seat Belt Reminder Light to turn on while unbuckling the seat belt and turn off while re-buckling the seat belt. It may be necessary to retract the seat belt.

4. Turn the ignition switch to the LOCK position. A single chime will sound to signify that you have successfully completed the programming.

BeltAlert® can be reactivated by repeating this procedure.

NOTE: Although BeltAlert® has been deactivated, the Seat Belt Reminder Light will continue to illuminate as long as the driver's seat belt is unbuckled.

Automatic Locking Mode — If Equipped

In this mode, the shoulder belt is automatically pre-locked. However, the belt will still retract to remove slack in the shoulder belt. Use the Automatic Locking mode any time a child safety seat is installed in a seating position that has a seat belt with this feature. Seat belts that have the Automatic Locking mode feature have a distinctive label on the webbing. Children 12 years old and younger should be properly restrained in the rear seat whenever possible.

How to Engage the Automatic Locking Mode

1. Buckle the combination lap/shoulder belt.

2. Grasp the shoulder portion and pull downward until the entire belt is extracted.

3. Allow the belt to retract. As the belt retracts, you will here a clicking sound. This indicates the safety belt is now in the Automatic Locking mode.

How to Disengage the Automatic Locking Mode

Unbuckle the combination lap and shoulder belt and allow it to retract completely to disengage the Automatic Locking mode and activate the Vehicle Sensitive (Emergency) Locking mode.

Seat Belts and Pregnant Women

We recommend that pregnant women use the seat belts throughout their pregnancy. Keeping the mother safe is the best way to keep the baby safe.

Pregnant women should wear the lap part of the belt across the thighs and as snug across the hips as possible. Keep the belt low so that it does not come across the abdomen. That way the strong bones of the hips will take the force if there is a collision.

Seat Belt Extender

If a seat belt is too short even when fully extended and when the adjustable upper shoulder belt anchorage (if so equipped) is in its lowest position, your authorized dealer can provide you with a seat belt extender. This extender should be used only if the existing belt is not long enough. When it is not required, remove the extender and store it.

WARNING!

Using a seat belt extender when not needed can increase the risk of injury in a collision. Only use when the seat belt is not long enough when it is worn low and snug and in the recommended seating positions. Remove and store the extender when not needed.

Driver and Front Passenger Supplemental Restraint System (SRS) - Airbag

This vehicle has front airbags for both the driver and front passenger as a supplement to the seat belt restraint systems. The driver's airbag is mounted in the center of the steering wheel. The passenger's front airbag is mounted in the instrument panel, above the glove compartment. The words SRS AIRBAG are embossed on the airbag covers.

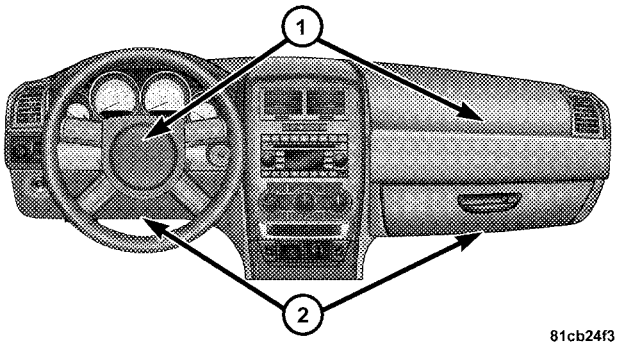

Front Airbag Components

1 — Airbags
2 — Knee Bolsters

NOTE: The front airbags are certified to the Federal regulations that allow less forceful deployment.

The front airbags have a multistage inflator design. This may allow the airbag to have different rates of inflation that are based on collision severity.

WARNING!

- **Do not put anything on or around the front airbag covers or attempt to open them. You may damage the airbags and you could be injured because the airbags are no longer functional. These protective covers for the airbag cushions are designed to open only when the airbags are inflating.**
- **Do not drill, cut or tamper with the knee bolster in any way.**
- **Do not mount any accessories to the knee bolster such as alarm lights, stereos, citizens band radios etc.**

This vehicle may also be equipped with supplemental side curtain airbags to protect the driver and passengers sitting next to a window and/or supplemental front seat-mounted side airbags.

If the vehicle is equipped with supplemental side curtain airbags, they are located above the side windows. Their covers are also labeled SRS AIRBAG.

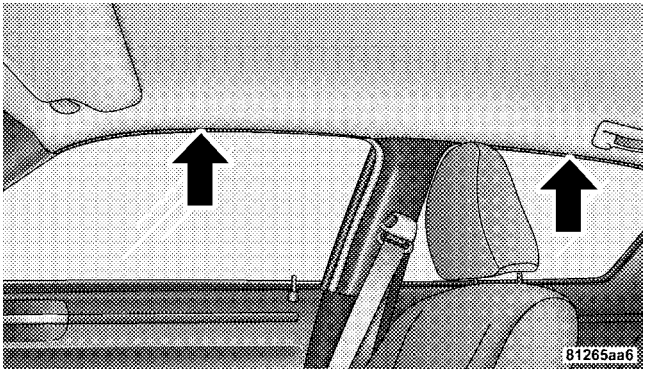

Window Airbag

NOTE: Airbag covers may not be obvious in the interior trim, but they will open to allow airbag deployment.

If the vehicle is equipped with supplemental front seat-mounted side airbags, they are marked with an SRS label sewn into the outboard side of the seat.

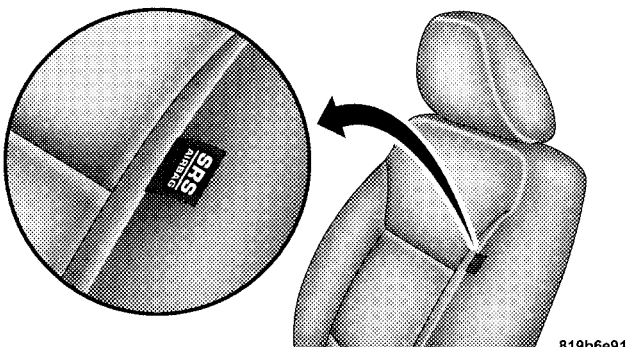

SRS Label Location

WARNING!

- **If your vehicle is equipped with supplemental front seat-mounted side airbags, do not use accessory seat covers or place objects between you and the seat airbags; the performance could be adversely affected and/or objects could be pushed into you, causing serious injury.**
- **If your vehicle is equipped with supplemental front seat-mounted side airbags, do not attach cupholders or any other objects on or around the door. The inflating seat airbag could drive the object into occupants, causing serious injury.**

(Continued)

WARNING! (Continued)

- **If your vehicle is equipped with supplemental side curtain airbags, do not stack luggage or other cargo up high enough to block the location of the side curtain airbag. The area where the side curtain airbag is located should remain free from any obstructions.**
- **If your vehicle is equipped with supplemental side curtain airbags, do not have any accessory items installed which will alter the roof, including adding a sunroof to your vehicle. Do not add roof racks that require permanent attachments (bolts or screws) for installation on the vehicle roof. Do not drill into the roof of the vehicle for any reason.**

NOTE: Do not use a clothing bar mounted to the coat hooks in this vehicle. A clothing bar will impede the proper performance of the curtain airbags.

Along with the seat belts, front airbags work with the instrument panel knee bolsters to provide improved protection for the driver and front passenger. Side curtain and seat airbags also work with seat belts to improve occupant protection.

While the seat belts are designed to protect you in many types of collisions, the front airbags will deploy in moderate to severe frontal collisions. For vehicles so equipped, the supplemental side curtain airbag and front seat-mounted side airbag on the crash side of the vehicle will also trigger in moderate to severe side collisions. However, even in collisions where the airbags deploy, you need the seat belts to keep you in the correct position for the airbags to protect you properly.

Here are some simple steps you can take to minimize the risk of harm from a deploying airbag.

1. Children 12 years old and younger should ride buckled up in the rear seat.

WARNING!

Infants in rear-facing child restraints should NEVER ride in the front seat of a vehicle with a passenger front airbag. An airbag deployment could cause severe injury or death to infants in that position.

2. Children who are not big enough to wear the vehicle seat belt properly should be secured in the rear seat in child restraints or belt-positioning booster seats. (Refer to information on Child Restraints in this section.)

3. Older children who do not use child restraints or belt-positioning booster seats should ride properly buckled up in the rear seat. Never allow children to slide the shoulder belt behind them or under their arm.

4. If a child from 1 to 12 years old must ride in the front passenger seat because the vehicle is crowded, move the seat as far back as possible and use the proper child restraint. (Refer to information on Child Restraints in this section.)

5. You should read the instructions provided with your child restraint to make sure that you are using it properly.

6. All occupants should use their seat belts properly.

7. The driver and front passenger seats should be moved back as far as practical to allow the airbags time to inflate.

8. If your vehicle has supplemental side curtain airbags and/or supplemental front seat mounted side airbags, do not lean against the door, as the airbags will inflate forcefully into the space between you and the door.

9. If the airbag system in this vehicle needs to be modified to accommodate a disabled person, contact the Customer Center. Phone numbers are provided in the "If You Need Customer Assistance" section.

WARNING!

- **Relying on the airbags alone could lead to more severe injuries in a collision. The airbags work with your seat belt to restrain you properly. In some collisions, the airbags won't deploy at all. Always wear your seat belts even though you have airbags.**
- **Being too close to the steering wheel or instrument panel during airbag deployment could cause serious injury. Airbags need room to inflate. Sit back, comfortably extending your arms to reach the steering wheel or instrument panel.**
- **If the vehicle has supplemental side curtain airbags and/or supplemental front seat-mounted side airbags, they also need room to inflate. Do not lean against the door or window. Sit upright in the center of the seat.**

Airbag System Components

The airbag system consists of the following:

- Occupant Restraint Controller (ORC)
- Side Remote Acceleration Sensors (if equipped)
- Airbag Warning Light
- Driver Airbag
- Front Passenger Airbag
- Supplemental Side Curtain Airbags above Side Windows (if equipped)
- Supplemental Front Seat-Mounted Side Airbags (if equipped)
- Steering Wheel and Column
- Instrument Panel
- Interconnecting Wiring

- Seat Belt Reminder Light
- Knee Impact Bolsters
- Front Acceleration Sensors
- Driver and Front Passenger Seat Belt Pretensioners

How the Airbag System Works

- The **Occupant Restraint Controller (ORC)** determines if a frontal collision is severe enough to require the airbags to inflate. The front airbag inflators are designed to provide different rates of airbag inflation from direction provided by the ORC. The ORC will not detect rollover.
- For vehicles so equipped, the ORC also determines if a side impact is severe enough to deploy the supplemental side curtain airbag and/or supplemental front seat-mounted side airbag, as required for each type of impact.
- The ORC also monitors the readiness of the electronic parts of the system whenever the ignition switch is in the START or ON positions. These include all of the items listed above except the knee bolster, the instrument panel, and the steering wheel and column. If the key is in the LOCK position, in the ACC position, or not in the ignition, the airbags are not on and they will not inflate.

- The ORC also turns on the Airbag Warning Light in the instrument panel for six to eight seconds as a self-check when the ignition is first turned on. After the self-check, the Airbag Warning Light will turn off. If the ORC detects a malfunction in any part of the system, it turns on the Airbag Warning Light either momentarily or continuously. A single chime will sound if the light comes on again after initial start-up.

WARNING!

Ignoring the Airbag Warning Light in your instrument panel could mean you won't have the airbags to protect you in a collision. If the light does not come on, stays on after you start the vehicle, or if it comes on as you drive, have the airbag system checked right away.

- The **Driver and Front Passenger Airbag/Inflator Units** are located in the center of the steering wheel and the passenger side of the instrument panel. When the ORC detects a collision requiring the airbags, it signals the inflator units. A large quantity of nontoxic gas is generated to inflate the front airbags. Different airbag inflation rates may be possible based on collision severity. The steering wheel hub trim cover, and the upper passenger side of the instrument panel separate and fold out of the way as the bags inflate to their full size. The bags fully inflate in about 50 to 70 ms. This is about half of the time that it takes to blink your eyes. The bags then quickly deflate while helping to restrain the driver and front passenger. The driver's front airbag gas is vented through vent holes in the sides of the airbag. The passenger's front airbag gas is vented through vent holes in the sides of the airbag. In this way, the airbags do not interfere with your control of the vehicle.
- The **Knee Impact Bolsters** help protect the knees of the driver and the front passenger and position everyone for the best interaction with the front airbag.
- The **Supplemental Side Impact SRS Side Curtain Airbags** are designed to activate only in certain side collisions. When the ORC (with side impact option) detects a collision requiring the side curtain airbag to inflate, it signals the inflators on the crash side of the vehicle. A quantity of nontoxic gas is generated to

inflate the side curtain airbag. The inflating side curtain airbag pushes the outside edge of the headliner out of the way and covers the window. The airbag inflates in about 30 ms (about one-quarter of the time that it takes to blink your eyes) with enough force to injure you if you are not belted and seated properly, or if items are positioned in the area where the side curtain airbag inflates. This especially applies to children. The side curtain airbag is only about 3-1/2 in (9 cm) thick when it is inflated.

- The **Supplemental Front Seat-Mounted Side Airbags** are designed to activate only in certain side collisions. When the ORC (with side impact option) detects a collision requiring the front seat-mounted side airbag to inflate, it signals the inflators on the crash side of the vehicle. A quantity of nontoxic gas is generated to inflate the front seat-mounted side airbag. The inflating front seat-mounted side airbag pushes through the seam in the seat's trim cover and opens into the space between the occupant and the door. The airbag inflates at a very high speed and with enough force to injure you if you are not belted and seated properly, or if items are positioned in the area where the front seat-mounted side airbag inflates. This especially applies to children.

The following requirements must be strictly adhered to:

- Do not make any modifications to the front seat components, assembly, or to the seat cover in any way.
- Do not use prior or future model year seat covers not designated for the specific model being repaired. Always use the correct seat cover specified for the vehicle.
- Do not replace the seat cover with an aftermarket seat cover.

- Do not add a secondary seat cover other than those approved by Chrysler LLC/Mopar®.
- At no time should any supplemental restraint system (SRS) component or SRS-related component or fastener be modified or replaced with any part except those which are approved by Chrysler LLC/Mopar®.

WARNING!

Unapproved modifications or service procedures to the front seat assembly, its related components, or seat cover may inadvertently change the airbag deployment in case of a frontal crash. This could result in death or serious injury to the driver or front seat passenger if the vehicle is involved in an accident. A modified vehicle may not comply with required Federal Motor Vehicle Safety Standards (FMVSS).

If a Deployment Occurs

The airbag system is designed to deploy when the ORC detects a moderate to severe collision to help restrain the driver and front passenger and then to immediately deflate.

NOTE: A frontal collision that is not severe enough to need airbag protection will not activate the system. This does not mean something is wrong with the airbag system.

If you do have a collision that deploys the airbags, any or all of the following may occur:

- The nylon airbag material may sometimes cause abrasions and/or skin reddening to the driver and front passenger as the airbags deploy and unfold. The abrasions are similar to friction rope burns or those you might get sliding along a carpet or gymnasium floor. They are not caused by contact with chemicals. They are not permanent and normally heal quickly.

However, if you haven't healed significantly within a few days or if you have any blistering, see your doctor immediately.

- As the airbags deflate, you may see some smoke-like particles. The particles are a normal by-product of the process that generates the nontoxic gas used for airbag inflation. These airborne particles may irritate the skin, eyes, nose, or throat. If you have skin or eye irritation, rinse the area with cool water. For nose or throat irritation, move to fresh air. If the irritation continues, see your doctor. If these particles settle on your clothing, follow the garment manufacturer's instructions for cleaning.
- It is not advisable to drive your vehicle after the airbags have been deployed. If you are involved in another collision, the airbags will not be in place to protect you.

WARNING!

Deployed airbags can't protect you in another collision. Have the airbags replaced by an authorized dealer as soon as possible.

Enhanced Accident Response System

In the event of an impact that causes airbag deployment, with the vehicle stopped, and the vehicle communication network intact, and the power intact, the Enhanced Accident Response System performs the following functions:

- Cuts off fuel to the engine.
- Flashes hazard lights.
- Turns on the interior lights, which remain on as long as the battery has power or until the ignition key is removed.

- Unlocks the doors automatically.

NOTE: The interior lights can only be deactivated if the key is removed from the ignition switch or the vehicle is driven.

Maintaining Your Airbag System

WARNING!

- **Modifications to any part of the airbag system could cause it to fail when you need it. You could be injured because the airbags are not there to protect you. Do not modify the components or wiring, including adding any kind of badges or stickers to the steering wheel hub trim cover or the upper passenger side of the instrument panel. Do not modify the front bumper, vehicle body structure, or frame.**

(Continued)

WARNING! (Continued)

- **You need proper knee impact protection in a collision. Do not mount or locate any aftermarket equipment on or behind the knee impact bolster.**
- **It is dangerous to try to repair any part of the airbag system yourself. Be sure to tell anyone who works on your vehicle that it has airbags.**

NOTE: Perchlorate Material — special handling may apply. See www.dtsc.ca.gov/hazardouswaste/perchlorate.

Airbag Warning Light

You will want to have the airbags ready to inflate for your protection in an impact. While the airbag system is designed to be maintenance free, if any of the following occurs, have an authorized dealer service the system promptly:

- The Airbag Warning Light does not come on or flickers during the six to eight seconds when the ignition switch is first turned ON.
- The light remains on or flickers after the six to eight second interval.
- The light flickers or comes on and remains on while driving.

Event Data Recorder (EDR)

In the event of an accident, your vehicle is designed to record up to five seconds of specific vehicle data parameters (see the following list) in an event data recorder prior to the moment of airbag deployment, or near deployment, and up to a quarter second of high-speed deceleration data during and/or after airbag deployment. EDR data are ONLY recorded if an airbag deploys, or nearly deploys, and are otherwise unavailable.

NOTE:

1. A near-deployment event occurs when the airbag sensor detects severe vehicle deceleration usually indicative of a crash, but not severe enough to warrant airbag deployment.

2. Under certain circumstances, EDR data may not be recorded (e.g., loss of battery power).

In conjunction with other data gathered during a complete accident investigation, the electronic data may be used by Chrysler LLC and others to learn more about the possible causes of crashes and associated injuries in order to assess and improve vehicle performance. In addition to crash investigations initiated by Chrysler LLC, such

investigations may be requested by customers, insurance carriers, government officials, and professional crash researchers, such as those associated with universities, and with hospital and insurance organizations.

In the event that an investigation is undertaken by Chrysler LLC (regardless of initiative), the company or its designated representative will first obtain permission of the appropriate custodial entity for the vehicle (usually the vehicle owner or lessee) before accessing the electronic data stored, unless ordered to download data by a court with legal jurisdiction (i.e., pursuant to a warrant). A copy of the data will be provided to the custodial entity upon request. General data that does not identify particular vehicles or crashes may be released for incorporation in aggregate crash databases, such as those maintained by the U.S. government and various states. Data of a potentially sensitive nature, such as would identify a particular driver, vehicle, or crash, will be treated confidentially. Confidential data will not be disclosed by Chrysler LLC to any third party except when:

1. Used for research purposes, such as to match data with a particular crash record in an aggregate database, provided confidentiality of personal data is thereafter preserved.

2. Used in defense of litigation involving a Chrysler LLC product.

3. Requested by police under a legal warrant.

4. Otherwise required by law.

Data parameters that may be recorded:

- Diagnostic trouble code(s) and warning light status for electronically-controlled safety systems, including the airbag system
- Airbag disable light status (if equipped)

- "Time" of airbag deployment (in terms of ignition cycles and vehicle mileage)
- Airbag deployment level (if applicable)
- Impact acceleration and angle
- Seat belt status
- Brake status (service and parking brakes)
- Accelerator status (including vehicle speed)
- Engine control status (including engine speed)
- Transmission gear selection
- Cruise control status
- Traction/stability control status
- Tire Pressure Monitoring System status (if equipped)

Child Restraints

Everyone in your vehicle needs to be buckled up all the time, including babies and children. Every state in the United States and all Canadian provinces require that small children ride in proper restraint systems. This is the law, and you can be prosecuted for ignoring it.

Children 12 years and younger should ride properly buckled up in a rear seat, if available. According to crash statistics, children are safer when properly restrained in the rear seats rather than in the front.

WARNING!

In a collision, an unrestrained child, even a tiny baby, can become a missile inside the vehicle. The force required to hold even an infant on your lap could become so great that you could not hold the child, no matter how strong you are. The child and others could be badly injured. Any child riding in your vehicle should be in a proper restraint for the child's size.

There are different sizes and types of restraints for children from newborn size to the child almost large enough for an adult safety belt. Always check the child seat Owner's Manual to ensure you have the correct seat for your child. Use the restraint that is correct for your child.

Infants and Child Restraints

- Safety experts recommend that children ride rearward-facing in the vehicle until they are at least one year old **and** weigh at least 20 lbs (9 kg). Two types of child restraints can be used rearward-facing, infant carriers and convertible child seats.
- The infant carrier is only used rearward-facing in the vehicle. It is recommended for children who weigh up to about 20 lbs (9 kg). Convertible child seats can be used either rearward-facing or forward-facing in the vehicle. Convertible child seats often have a higher weight limit in the rearward-facing direction than infant carriers do, so they can be used rearward-facing by children who weigh more than 20 lbs (9 kg) but are less than one year old. Both types of child restraints are held in the vehicle by the lap/shoulder belt or the LATCH child restraint anchorage system. Refer to

"LATCH — Child Seat Anchorage System (Lower Anchors and Tether for CHildren)" in this section.

WARNING!

Rearward-facing child seats must NEVER be used in the front seat of a vehicle with the front passenger airbag unless the airbag is turned off. An airbag deployment could cause severe injury or death to infants in this position.

Older Children and Child Restraints

Children who weigh more than 20 lbs (9 kg) and who are older than one year can ride forward-facing in the vehicle. Forward-facing child seats and convertible child seats used in the forward-facing direction are for children who weigh 20 to 40 lbs (9 to 18 kg) and who are older than one year. These child seats are also held in the vehicle by the lap/shoulder belt or the LATCH child restraint anchorage system. Refer to "LATCH — Child Seat Anchorage System (Lower Anchors and Tether for CHildren)" in this section.

The belt-positioning booster seat is for children weighing more than 40 lbs (18 kg), but who are still too small to fit the vehicle's seat belts properly. If the child cannot sit with knees bent over the vehicle's seat cushion while the child's back is against the seatback, they should use a belt-positioning booster seat. The child and belt-positioning booster seat are held in the vehicle by the lap/shoulder belt.

Children Too Large for Booster Seats

Children who are large enough to wear the shoulder belt comfortably and whose legs are long enough to bend over the front of the seat when their back is against the seatback should use the lap/shoulder belt in a rear seat.

- Make sure that the child is upright in the seat.

- The lap portion should be low on the hips and as snug as possible.
- Check belt fit periodically. A child's squirming or slouching can move the belt out of position.
- If the shoulder belt contacts the face or neck, move the child closer to the center of the vehicle. Never allow a child to put the shoulder belt under an arm or behind their back.

NOTE: For additional information, refer to www.seatcheck.org or call 1–866–SEATCHECK.

WARNING!

- **Improper installation can lead to failure of an infant or child restraint. It could come loose in a collision. The child could be badly injured or killed. Follow the manufacturer's directions exactly when installing an infant or child restraint.**
- **A rearward-facing child restraint should only be used in a rear seat. A rearward-facing child restraint in the front seat may be struck by a deploying passenger airbag, which may cause severe or fatal injury to the infant.**

Here are some tips on getting the most out of your child restraint:

- Before buying any restraint system, make sure that it has a label certifying that it meets all applicable Safety Standards. We also recommend that you make sure that you can install the child restraint in the vehicle where you will use it before you buy it.
- The restraint must be appropriate for your child's weight and height. Check the label on the restraint for weight and height limits.
- Carefully follow the instructions that come with the restraint. If you install the restraint improperly, it may not work when you need it.
- Buckle the child into the seat according to the child restraint manufacturer's directions.
- When your child restraint is not in use, secure it in the vehicle with the seat belt or remove it from the vehicle. Do not leave it loose in the vehicle. In a sudden stop or collision, it could strike the occupants or seatbacks and cause serious personal injury.

LATCH — Child Seat Anchorage System (Lower Anchors and Tether for CHildren)

Your vehicle's rear seat is equipped with the child restraint anchorage system called LATCH. The LATCH system provides for the installation of the child restraint without using the vehicle's seat belts, instead securing the child restraint using lower anchorages and upper tether straps from the child restraint to the vehicle structure.

LATCH-compatible child restraint systems are now available. However, because the lower anchorages are to be introduced over a period of years, child restraint systems having attachments for those anchorages will continue to have features for installation using the vehicle's seat belts. Child restraints having tether straps and hooks for

connection to the top tether anchorages have been available for some time. For some older child restraints, many child restraint manufacturers offer add-on tether strap kits or retrofit kits. You are urged to take advantage of all the available attachments provided with your child restraint in any vehicle.

All three rear-seating positions have lower anchorages that are capable of accommodating LATCH-compatible child seats. You should **NEVER** install LATCH-compatible child seats so that two seats share a common lower anchorage. If installing child seats in adjacent rear-seating positions, or if your child restraints are not LATCH-compatible, install the restraints using the vehicle's seat belts.

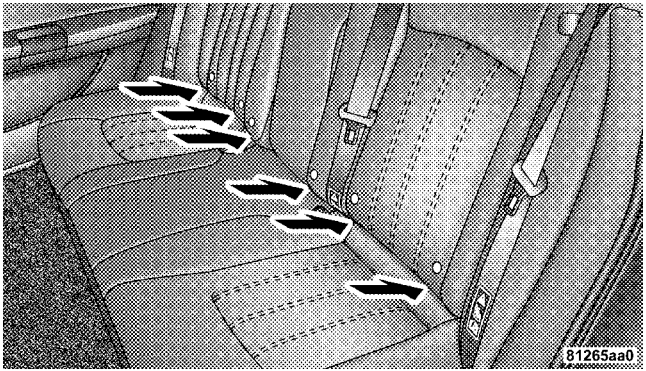

LATCH Anchorages

Installing the LATCH-Compatible Child Restraint System

We urge you to follow the manufacturer's directions carefully when installing your child restraint. Not all child restraint systems will be installed as described here.

Again, carefully follow the installation instructions that are provided with the child restraint system.

The rear seat lower anchorages are round bars located at the rear of the seat cushion where it meets the seatback and are just visible when you lean into the rear seat to install the child restraint. You will easily feel them if you run your finger along the intersection of the seatback and seat cushion surfaces.

In addition, there are tether strap anchorages behind each rear seating position located in the panel between the rear seatback and the rear window. These tether strap anchorages are under a plastic cover with this symbol on it.

Many, but not all restraint systems will be equipped with separate straps on each side, with each having a hook or connector for attachment to the lower anchorage and a means of adjusting the tension in the strap. Forward-facing toddler restraints and some rear-facing infant restraints will also be equipped with a tether strap, a hook for attachment to the tether strap anchorage and a means of adjusting the tension of the strap.

You will first loosen the adjusters on the lower straps and on the tether strap so that you can more easily attach the hooks or connectors to the vehicle anchorages. Next, attach the lower hooks or connectors over the top of the seatcover material. Then rotate the tether anchorage cover directly behind the seat where you are placing the child restraint and attach the tether strap to the anchorage, being careful to route the tether strap to provide the most direct path between the anchor and the child restraint. Finally, tighten all three straps as you push the child restraint rearward and downward into the seat, removing slack in the straps according to the child restraint manufacturer's instructions.

NOTE:

- Ensure that the tether strap does not slip into the opening between the seatbacks as you remove slack in the strap.
- When using the LATCH attaching system to install a child restraint, please ensure that all seat belts not being used for occupant restraints are stowed and out of reach of children. It is recommended that before installing the child restraint, buckle the seat belt so the seat belt is tucked behind the child restraint and out of reach. If the buckled seat belt interferes with the child restraint installation, instead of tucking the seat belt behind the child restraint, route the seat belt through the child restraint belt path and then buckle it. This should stow the seat belt out of the reach of an inquisitive child. Remind all children in the vehicle that the seat belts are not toys and should not be played with, and never leave your child unattended in the vehicle.

WARNING!

Improper installation of a child restraint to the LATCH anchorages can lead to failure of an infant or child restraint. The child could be badly injured or killed. Follow the manufacturer's directions exactly when installing an infant or child restraint.

Installing Child Restraints Using the Vehicle Seat Belts

The passenger seat belts are equipped with either cinching latch plates or Automatic Locking Retractors (ALRs), which are designed to keep the lap portion tight around the child restraint so that it is not necessary to use a locking clip. Pulling up on the shoulder portion of the lap/shoulder belt will tighten the belt. The cinching latch plate will keep the belt tight; however, any seat belt system will loosen with time, so check the belt occasionally and pull it tight if necessary.

Seat belts with an automatic locking retractor have a distinctive label on the seat belt webbing. The seat belt must be in the Automatic Locking mode in order to enable a child restraint to be tightly installed. Refer to "Automatic Locking Mode" in this section. A locking clip should not be necessary once the automatic locking feature is enabled. Position the shoulder and lap belt on the child restraint. The automatic locking retractor is activated by first attaching the child seat, then pulling all of the webbing out of the retractor, then allowing the webbing to retract back into the retractor. Tighten webbing. To release, simply unbuckle the seat belt by depressing the button, allowing the webbing to retract into the retractor.

In the rear seat, you may have trouble tightening the lap/shoulder belt on the child restraint because the buckle or latch plate is too close to the belt path opening on the restraint. Disconnect the latch plate from the buckle and twist the short buckle end belt several times to shorten it. Insert the latch plate into the buckle with the release button facing out.

If the belt still can't be tightened, or if pulling and pushing on the restraint loosens the belt, you may need to do something more. Disconnect the latch plate from the buckle, turn the buckle around, and insert the latch plate into the buckle again. If you still can't make the child restraint secure, try a different seating position.

To attach a child restraint tether strap:

1. Rotate the cover over the anchor directly behind the seat where you are placing the child restraint.

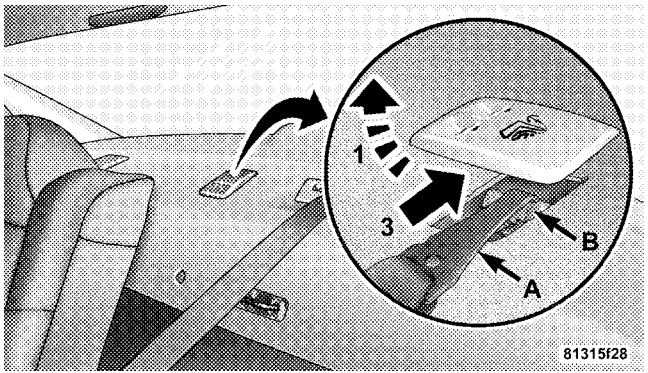

Tether Strap Mounting

1— Cover	A— Tether Strap Hook
3— Attaching Strap	B— Tether Anchor

2. Route the tether strap to provide the most direct path for the strap between the anchor and the child seat.

3. Attach the tether strap hook (A) of the child restraint to the anchor (B) and remove slack in the tether strap according to the child restraint manufacturer's instructions.

NOTE: Ensure that the tether strap does not slip into the opening between the seatbacks as you remove slack in the strap.

WARNING!

An incorrectly anchored tether strap could lead to increased head motion and possible injury to the child. Use only the anchor positions directly behind the child seat to secure a child restraint top tether strap.

Transporting Pets

Airbags deploying in the front seat could harm your pet. An unrestrained pet will be thrown about and possibly injured, or injure a passenger during panic braking or in a collision.

Pets should be restrained in the rear seat in pet harnesses or pet carriers that are secured by seat belts.

ENGINE BREAK-IN RECOMMENDATIONS

A long break-in period is not required for the engine in your vehicle.

Drive moderately during the first 300 miles (500 km). After the initial 60 miles (100 km), speeds up to 50 or 55 mph (80 or 90 km/h) are desirable.

While cruising, brief full-throttle acceleration within the limits of local traffic laws, contributes to a good break-in. Wide-open throttle acceleration in low gear can be detrimental and should be avoided.

The engine oil installed in the engine at the factory is a high-quality energy conserving type lubricant. Oil changes should be consistent with anticipated climate conditions under which vehicle operations will occur. The recommended viscosity and quality grades are shown under “Engine Oil”, under “Maintenance Procedures” in section 7 of this manual. NON-DETERGENT OR STRAIGHT MINERAL OILS MUST NEVER BE USED.

A new engine may consume some oil during its first few thousand miles (kilometers) of operation. This should be considered as a normal part of the break-in and not interpreted as an indication of difficulty.

SAFETY TIPS

Transporting Passengers

NEVER TRANSPORT PASSENGERS IN THE CARGO AREA.

WARNING!

- **It is extremely dangerous to ride in a cargo area, inside or outside of a vehicle. In a collision, people riding in these areas are more likely to be seriously injured or killed.**
- **Do not allow people to ride in any area of your vehicle that is not equipped with seats and seat belts.**
- **Be sure everyone in your vehicle is in a seat and using a seat belt properly.**

Exhaust Gas

WARNING!

Exhaust gases can injure or kill. They contain carbon monoxide (CO), which is colorless and odorless. Breathing it can make you unconscious and can eventually poison you. To avoid breathing (CO) follow these safety tips:

Do not run the engine in a closed garage or in confined areas any longer than needed to move your vehicle in or out of the area.

If it is necessary to sit in a parked vehicle with the engine running, adjust your heating or cooling controls to force outside air into the vehicle. Set the blower at high speed.

If you are required to drive with the trunk/liftgate open, make sure that all windows are closed and the climate control BLOWER switch is set at high speed. DO NOT use the recirculation mode.

The best protection against carbon monoxide entry into the vehicle body is a properly maintained engine exhaust system.

Whenever a change is noticed in the sound of the exhaust system, when exhaust fumes can be detected inside the vehicle, or when the underside or rear of the vehicle is damaged, have a competent mechanic inspect the complete exhaust system and adjacent body areas for broken, damaged, deteriorated, or mispositioned parts. Open seams or loose connections could permit exhaust fumes to seep into the passenger compartment. In addition, inspect the exhaust system each time the vehicle is raised for lubrication or oil change. Replace as required.

Safety Checks You Should Make Inside The Vehicle

Seat Belts

Inspect the belt system periodically, checking for cuts, frays, and loose parts. Damaged parts must be replaced immediately. Do not disassemble or modify the system.

Front seat belt assemblies must be replaced after a collision. Rear seat belt assemblies must be replaced after a collision if they have been damaged (i.e., bent retractor, torn webbing, etc.). If there is any question regarding belt or retractor condition, replace the belt.

Airbag Warning Light

The light should come on and remain on for six to eight seconds as a bulb check when the ignition switch is first turned ON. If the light is not lit during starting, see your authorized dealer. If the light stays on, flickers, or comes on while driving, have the system checked by an authorized dealer.

Defroster
Check operation by selecting the defrost mode and place the blower control on high speed. You should be able to feel the air directed against the windshield. See your authorized dealer for service if your defroster is inoperable.

Periodic Safety Checks You Should Make Outside The Vehicle

Tires
Examine tires for excessive tread wear and uneven wear patterns. Check for stones, nails, glass, or other objects lodged in the tread. Inspect the tread and sidewall for cuts and cracks. Check the wheel nuts for tightness. Check the tires (including spare) for proper pressure.

Lights
Have someone observe the operation of exterior lights while you work the controls. Check turn signal and high beam indicator lights on the instrument panel.

Door Latches
Check for positive closing, latching, and locking.

Fluid Leaks
Check area under vehicle after overnight parking for fuel, engine coolant, oil, or other fluid leaks. Also, if gasoline fumes are detected or if fuel, power steering fluid, or brake fluid leaks are suspected, the cause should be located and corrected immediately.

UNDERSTANDING THE FEATURES OF YOUR VEHICLE

CONTENTS

■ Mirrors 85

□ Inside Day/Night Mirror 85

□ Automatic Dimming Inside Mirror — If Equipped 86

□ Outside Mirrors 86

□ Outside Mirrors Folding Feature — If Equipped 87

□ Driver Side Outside Mirror Auto Dimmer — If Equipped 87

□ Power Mirrors 88

□ Heated Power Mirrors — If Equipped 88

□ Illuminated Vanity Mirrors — If Equipped . . . 88

■ uconnect® phone — If Equipped 89

□ Operation 91

□ Phone Call Features 99

□ uconnect® phone Features 102

□ Advanced Phone Connectivity 107

□ Things You Should Know About Your uconnect® phone 108

- General Information 117

■ Voice Recognition System (VR) — If Equipped 117

- Voice Recognition System (VR) Operation . . . 117
- Commands 119
- Voice Training 122

■ Seats 122

- Manual Seats — If Equipped 122
- Power Seats — If Equipped 124
- Power Reclining Seats — If Equipped 124
- Lumbar Support — If Equipped 126
- Head Restraints 126
- Heated Seats — If Equipped 127
- Folding Rear Seat — If Equipped 128

■ To Open And Close The Hood 129

■ Lights 131

- Headlight Switch 131
- Automatic Headlights — If Equipped 132
- Headlights On With Wipers (Available With Auto Headlights Only) 132
- Headlight Time Delay 132
- Daytime Running Lights — If Equipped 133
- Lights-On Reminder 133
- Fog Lights — If Equipped 133
- Multifunction Lever 134
- Overhead Console Map/Reading Lights 135

- Interior Lights 135
- Windshield Wipers And Washers 137
  - Intermittent Wiper System 137
  - Mist Feature 138
  - Windshield Washers 138
  - Headlights On With Wipers (Available With Auto Headlights Only) 138
- Tilt/Telescoping Steering Column 139
- Adjustable Pedals — If Equipped 140
- Electronic Speed Control 141
  - To Activate 142
  - To Set At A Desired Speed 142
  - To Deactivate 142
  - To Resume Speed 143
  - To Vary The Speed Setting 143
  - To Accelerate For Passing 143
- Overhead Console 145
  - Courtesy/Reading Lights 145
  - Sunglasses Storage 145
- Garage Door Opener — If Equipped 146
  - Programming HomeLink® 147
  - Gate Operator/Canadian Programming 150
  - Using HomeLink® 150
  - Reprogramming A Single HomeLink® Button 151
  - Security 151

- Troubleshooting Tips 151
- General Information 152

■ Power Sunroof — If Equipped 152

- Opening Sunroof — Express 153
- Closing Sunroof — Express 153
- Pinch Protect Feature 153
- Pinch Protect Override 154
- Venting Sunroof — Express 154
- Sunshade Operation 154
- Wind Buffeting 154
- Sunroof Maintenance 155
- Ignition Off Operation 155
- Sunroof Fully Closed 155

■ Electrical Power Outlets 155

■ Cupholders 158

- Front Seat Cupholders 158
- Rear Seat Cupholders 159

■ Storage 159

- Console Features 159
- Cargo Area — Vehicles Equipped With 60/40 Split-Folding Rear Seat 161

■ Rear Window Features 163

- Rear Window Defroster 163

■ Load Leveling System — If Equipped 164

MIRRORS

Inside Day/Night Mirror

A two-point pivot system allows for horizontal and vertical mirror adjustment. Adjust the mirror to center on the view through the rear window.

Headlight glare can be reduced by moving the small control under the mirror to the night position (toward the rear of the vehicle). The mirror should be adjusted while set in the day position (toward the windshield).

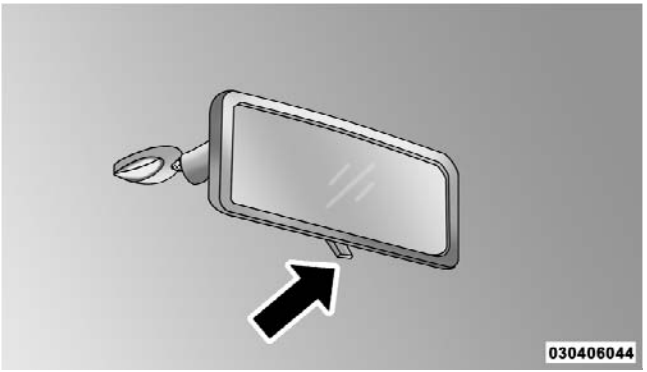

Adjusting Rearview Mirror

Automatic Dimming Inside Mirror — If Equipped

This mirror automatically adjusts for headlight glare from vehicles behind you. You can turn the feature on or off by pressing the button at the base of the mirror. A light next to the button will illuminate to indicate when the dimming feature is activated.

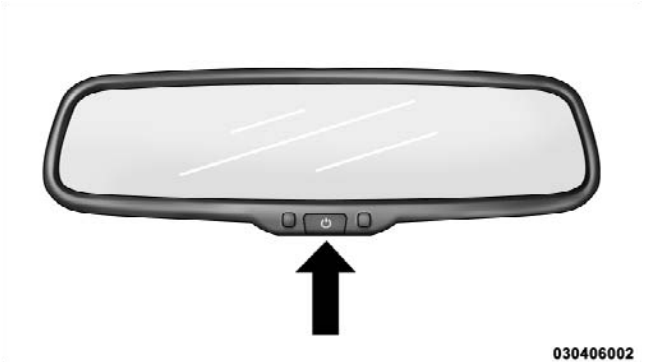

Automatic Dimming Mirror

CAUTION!

To avoid damage to the mirror during cleaning, never spray any cleaning solution directly onto the mirror. Apply the solution onto a clean cloth and wipe the mirror clean.

Outside Mirrors

To receive maximum benefit, adjust the outside mirror(s) to center on the adjacent lane of traffic and a slight overlap of the view obtained from the inside mirror.

NOTE: The passenger-side convex outside mirror will give a much wider view to the rear, and especially of the lane next to your vehicle.

WARNING!

Vehicles and other objects seen in the passenger-side convex mirror will look smaller and farther away than they really are. Relying too much on your passenger-side convex mirror could cause you to collide with another vehicle or other object. Use your inside mirror when judging the size or distance of a vehicle seen in the passenger-side convex mirror.

Outside Mirrors Folding Feature — If Equipped

Some models have outside mirrors that are hinged. The hinge allows the mirror to pivot forward and rearward to resist damage. The hinge has three detent positions, full forward, full rearward and normal.

Driver Side Outside Mirror Auto Dimmer — If Equipped

This mirror automatically adjusts for headlight glare from vehicles behind you. You can turn this feature on or off by pressing the button at the base of the inside rearview mirror.

Power Mirrors

The power mirror switch is located on the drivers door trim panel next to the power door lock switch. A rotary knob selects the left mirror, right mirror or off position.

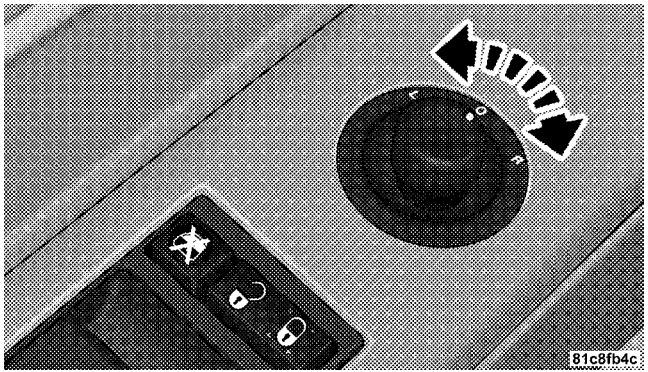

Power Mirror Control

After selecting a mirror, move the knob in the same direction you want the mirror to move. Use the center off position to guard against accidentally moving a mirror position.

Heated Power Mirrors — If Equipped

These mirrors are heated to melt frost or ice. This feature is activated whenever you turn on the rear window defroster. Refer to “Rear Window Features” in this Section, for further information.

Illuminated Vanity Mirrors — If Equipped

An illuminated vanity mirror is located on the sun visor. To use the mirror, rotate the sun visor downward and swing the mirror cover upward. The light turns on automatically. Closing the mirror cover turns off the light.

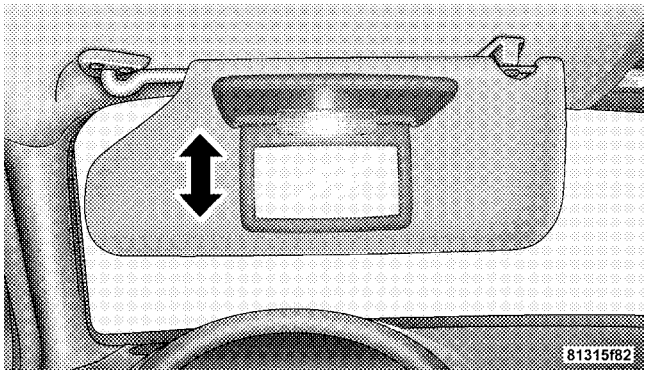

Illuminated Vanity Mirror

uconnect® phone — IF EQUIPPED

NOTE: The sales code RER and REU radios contain an integrated uconnect® phone. Refer to your "Navigation User's Manual" for uconnect® phone operating instructions for these radios. Radio sales code can be located on the lower right corner of the Radio faceplate.

uconnect® phone is a voice-activated, hands-free, in-vehicle communications system. uconnect® allows you to dial a phone number with your cellular phone using simple voice commands (e.g., "Call" ... "Mike" ..."Work" or "Dial" ... "248-555-1212"). Your cellular phone's audio is transmitted through your vehicle's audio system; the system will automatically mute your radio when using the uconnect® phone.

NOTE:

- The uconnect® phone requires a cellular phone equipped with the Bluetooth® "Hands-Free Profile," Version 0.96 or higher. See the uconnect® website for supported phones.

For uconnect® customer support, visit the following websites:

- www.chrysler.com/uconnect
- www.dodge.com/uconnect

- www.jeep.com/uconnect
- or call 1–877–855–8400

uconnect® allows you to transfer calls between the system and your cellular phone as you enter or exit your vehicle and enables you to mute the system's microphone for private conversation.

The uconnect® phone is driven through your Bluetooth® "Hands-Free Profile" cellular phone. uconnect® features Bluetooth® technology - the global standard that enables different electronic devices to connect to each other without wires or a docking station, so uconnect® phone works no matter where you stow your cellular phone (be it your purse, pocket, or briefcase), as long as your phone is turned on and has been paired to the vehicle's uconnect® phone. The uconnect® phone allows up to seven cellular phones to be linked to the system. Only one linked (or paired) cellular phone can be used with the system at a time. The system is available in English, Spanish, or French languages.

Phone Button

The rearview mirror contains the microphone for the system (depending on the type of mirror and radio equipped), and either the radio or the mirror has the two control buttons (PHONE Button and VOICE RECOGNITION button) that will enable you to access the system.

Voice Recognition Button

Actual button location may vary with the radio. The individual buttons are described in the "Operation" section.

The uconnect® phone can be used with any Hands-Free Profile certified Bluetooth® cellular phone. See the uconnect® website for supported phones. If your cellular

phone supports a different profile (e.g., Headset Profile) you may not be able to use any uconnect® phone features. Refer to your cellular service provider or the phone manufacturer for details.

The uconnect® phone is fully integrated with the vehicle's audio system. The volume of the uconnect® phone can be adjusted either from the radio volume control knob or from the steering wheel radio control (right switch), if so equipped.

The radio display will be used for visual prompts from the uconnect® phone such as "CELL" or caller ID on certain radios.

Operation

Voice commands can be used to operate the uconnect® phone and to navigate through the uconnect® phone menu structure. Voice commands are required after most uconnect® phone prompts. You will be prompted for a specific command and then guided through the available options.

- Prior to giving a voice command, one must wait for the beep, which follows the "Ready" prompt or another prompt.
- For certain operations, compound commands can be used. For example, instead of saying "Setup" and then "Phone Pairing," the following compound command can be said: "Setup Phone Pairing."
- For each feature explanation in this section, only the combined form of the voice command is given. You can also break the commands into parts and say each part of the command when you are asked for it. For example, you can use the combined form voice command "Phonebook New Entry," or you can break the combined form command into two voice commands: "Phonebook" and "New Entry." Please remember, the

uconnect® phone works best when you talk in a normal conversational tone, as if speaking to someone sitting a few feet/meters away from you.

Voice Command Tree
Refer to "Voice Tree" in this section.

Help Command
If you need assistance at any prompt, or if you want to know your options at any prompt, say "Help" following the beep. The uconnect® phone will play all the options at any prompt if you ask for help.

To activate the uconnect® phone from idle, simply press the PHONE button and follow the audible prompts for directions. All uconnect® phone sessions begin with a press of the PHONE button on the radio control head.

Cancel Command
At any prompt, after the beep, you can say "Cancel" and you will be returned to the main menu. However, in a few instances the system will take you back to the previous menu.

Pair (Link) uconnect® phone to a Cellular Phone
To begin using your uconnect® phone, you must pair your compatible Bluetooth® enabled cellular phone.

To complete the pairing process, you will need to reference your cellular phone Owner's Manual. The uconnect® website may also provide detailed instructions for pairing.

The following are general phone to uconnect® phone pairing instructions:

- Press the PHONE button to begin.
- After the "Ready" prompt and the following beep, say "Setup Phone Pairing."

- When prompted, after the beep, say "Pair a Phone" and follow the audible prompts.
- You will be asked to say a four-digit Personal Identification Number (PIN), which you will later need to enter into your cellular phone. You can enter any four-digit PIN. You will not need to remember this PIN after the initial pairing process.
- For identification purposes, you will be prompted to give the uconnect® phone a name for your cellular phone. Each cellular phone that is paired should be given a unique phone name.
- You will then be asked to give your cellular phone a priority level between one and seven, with one being the highest priority. You can pair up to seven cellular phones to your uconnect® phone. However, at any given time, only one cellular phone can be in use, connected to your uconnect® phone. The priority allows the uconnect® phone to know which cellular phone to use if multiple cellular phones are in the vehicle at the same time. For example, if priority three and priority five phones are present in the vehicle, the uconnect® phone will use the priority three cellular phone when you make a call. You can select to use a lower priority cellular phone at any time (refer to "Advanced Phone Connectivity" in this section).

Dial by Saying a Number

- Press the PHONE button to begin.
- After the "Ready" prompt and the following beep, say "Dial."
- The system will prompt you to say the number you want to call.
- For example, you can say "234-567-8901".

- The uconnect® phone will confirm the phone number and then dial. The number will appear in the display of certain radios.

Call by Saying a Name

- Press the PHONE button to begin.
- After the "Ready" prompt and the following beep, say "Call."
- The system will prompt you to say the name of the person you want to call.
- After the "Ready" prompt and the following beep, say the name of the person you want to call. For example, you can say "John Doe," where John Doe is a previously stored name entry in the uconnect® phonebook or downloaded phonebook. To learn how to store a name in the phonebook, refer to "Add Names to Your uconnect® Phonebook," in the phonebook.
- The uconnect® system will confirm the name and then dial the corresponding phone number, which may appear in the display of certain radios.

Add Names to Your uconnect® Phonebook

NOTE: Adding names to the uconnect® phonebook is recommended when the vehicle is not in motion.

- Press the PHONE button to begin.
- After the "Ready" prompt and the following beep, say "Phonebook New Entry."
- When prompted, say the name of the new entry. Use of long names helps the voice recognition and it is recommended. For example, say "Robert Smith" or "Robert" instead of "Bob."

- When prompted, enter the number designation (e.g., "Home," "Work," "Mobile," or "Pager"). This will allow you to store multiple numbers for each phonebook entry, if desired.
- When prompted, recite the phone number for the phonebook entry that you are adding.

After you are finished adding an entry into the phonebook, you will be given the opportunity to add more phone numbers to the current entry or to return to the main menu.

The uconnect® phone will allow you to enter up to 32 names in the phonebook with each name having up to four associated phone numbers and designations. Each language has a separate 32-name phonebook accessible only in that language. In addition, if equipped and supported by your phone, uconnect® phone automatically downloads your cellular phone's phonebook.

Phonebook Download – Automatic Phonebook Transfer From Cellular Phone

If equipped and specifically supported by your phone, uconnect® phone automatically downloads names (text names) and number entries from the cellular phone's phonebook. Specific Bluetooth® Phones with Phone Book Access Profile may support this feature. See uconnect® website for supported phones.

- To call a name from downloaded (or uconnect®) Phonebook, follow the procedure in "Call by Saying a Name" section.
- Automatic download and update, if supported, begins as soon as the Bluetooth® wireless phone connection is made to the uconnect® phone, for example, after you start the vehicle.
- A maximum of 1000 entries per phone will be downloaded and updated every time a phone is connected to the uconnect® phone.

- Depending on the maximum number of entries downloaded, there may be a short delay before the latest downloaded names can be used. Until then, if available, the previous downloaded phonebook is available for use.
- Only the phonebook of the currently connected cellular phone is accessible.
- Only the cellular phone's phonebook is downloaded. SIM card phonebook is not part of the Mobile phonebook.
- This downloaded phonebook cannot be edited or deleted on the uconnect® phone. These can only be edited on the cellular phone. The changes are transferred and updated to uconnect® phone on the next phone connection.

Phonebook Download — Single Entry

If equipped and supported by your phone, uconnect® phone allows the user to download entries from their phone via Bluetooth®. To use this feature, press the PHONE button and say "Phonebook Download." The system prompts, "Ready to accept "V" card entry via Bluetooth®…" The system is now ready to accept phonebook entries from your phone using the Bluetooth® Object Exchange Profile (OBEX). Please see your phone Owner's Manual for specific instructions on how to send these entries from your phone.

NOTE:

- The phone handset must support Bluetooth® OBEX transfers of phonebook entries to use this feature.
- Some phones cannot send phonebook entries if they are already connected to any system via Bluetooth®, and you may see a message on the phone display that the Bluetooth® link is busy. In this case, the user must

first disconnect or drop the Bluetooth® connection to the uconnect® phone, and then send the address book entry via Bluetooth®. Please see your phone Owner's Manual for specific instructions on how to drop the Bluetooth® connection.

- If the phonebook entry is longer than 24 characters, it will only use the first 24 characters.

Edit uconnect® Phonebook Entries

NOTE:

- Editing names in the phonebook is recommended when the vehicle is not in motion.
- Automatic downloaded phonebook entries cannot be deleted or edited.
- Press the PHONE button to begin.
- After the "Ready" prompt and the following beep, say "Phonebook Edit."
- You will then be asked for the name of the phonebook entry that you wish to edit.
- Next, choose the number designation (home, work, cellular, or pager) that you wish to edit.
- When prompted, recite the new phone number for the phonebook entry that you are editing.

After you are finished editing an entry in the phonebook, you will be given the opportunity to edit another entry in the phonebook, call the number you just edited, or return to the main menu.

"Phonebook Edit" can be used to add another phone number to a name entry that already exists in the phonebook. For example, the entry John Doe may have a cellular and a home number, but you can add "John Doe's" work number later using the "Phonebook Edit" feature.

Delete uconnect® Phonebook Entry

NOTE: Editing phonebook entries is recommended when the vehicle is not in motion.

- Press the PHONE button to begin.
- After the "Ready" prompt and the following beep, say "Phonebook Delete."
- After you enter the Phonebook Delete menu, you will then be asked for the name of the entry that you wish to delete. You can either say the name of a phonebook entry that you wish to delete or you can say "List Names" to hear a list of the entries in the phonebook from which you choose. To select one of the entries from the list, press the VOICE RECOGNITION button while the uconnect® phone is playing the desired entry and say "Delete."
- After you enter the name, the uconnect® phone will ask you which designation you wish to delete: home, work, cellular, pager, or all. Say the designation you wish to delete.
- Note that only the phonebook entry in the current language is deleted.
- Automatic downloaded phonebook entries cannot be deleted or edited.

Delete/Erase "All" uconnect® Phonebook Entries

- Press the PHONE button to begin.
- After the "Ready" prompt and the following beep, say "Phonebook Erase All."
- The uconnect® phone will ask you to verify that you wish to delete all the entries from the phonebook.
- After confirmation, the phonebook entries will be deleted.

- Note that only the phonebook in the current language is deleted.
- Automatic downloaded phonebook entries cannot be deleted or edited.

List All Names in the uconnect® Phonebook

- Press the PHONE button to begin.
- After the "Ready" prompt and the following beep, say "Phonebook List Names."
- The uconnect® phone will play the names of all the phonebook entries, including the downloaded phonebook entries, if available.
- To call one of the names in the list, press the VOICE RECOGNITION button during the playing of the desired name, and say "Call."

NOTE: The user can also exercise "Edit" or "Delete" operations at this point.

- The uconnect® phone will then prompt you as to the number designation you wish to call.
- The selected number will be dialed.

Phone Call Features

The following features can be accessed through the uconnect® phone if the feature(s) are available on your cellular service plan. For example, if your cellular service plan provides three-way calling, this feature can be accessed through the uconnect® phone. Check with your cellular service provider for the features that you have.

Answer or Reject an Incoming Call - No Call Currently in Progress

When you receive a call on your cellular phone, the uconnect® phone will interrupt the vehicle audio system, if on, and will ask if you would like to answer the call. Press the PHONE button to accept the call. To reject the

call, press and hold the PHONE button until you hear a single beep, indicating that the incoming call was rejected.

Answer or Reject an Incoming Call - Call Currently in Progress

If a call is currently in progress and you have another incoming call, you will hear the same network tones for call waiting that you normally hear when using your cellular phone. Press the PHONE button to place the current call on hold and answer the incoming call.

NOTE: The uconnect® phone compatible phones in the market today do not support rejecting an incoming call when another call is in progress. Therefore, the user can only answer an incoming call or ignore it.

Making a Second Call While Current Call is in Progress

To make a second call while you are currently on a call, press the VOICE RECOGNITION button and say "Dial" or "Call" followed by the phone number or phonebook entry you wish to call. The first call will be on hold while the second call is in progress. To go back to the first call, refer to "Toggling Between Calls" in this section. To combine two calls, refer to "Conference Call" in this section.

Place/Retrieve a Call From Hold

To put a call on hold, press the PHONE button until you hear a single beep. This indicates that the call is on hold. To bring the call back from hold, press and hold the PHONE button until you hear a single beep.

Toggling Between Calls

If two calls are in progress (one active and one on hold), press the PHONE button until you hear a single beep, indicating that the active and hold status of the two calls have switched. Only one call can be placed on hold at a time.

Conference Call

When two calls are in progress (one active and one on hold), press and hold the PHONE button until you hear a double beep indicating that the two calls have been joined into one conference call.

Three-Way Calling

To initiate three-way calling, press the VOICE RECOGNITION button while a call is in progress, and make a second phone call, as described under "Making a Second Call While Current Call is in Progress." After the second call has established, press and hold the PHONE button until you hear a double beep, indicating that the two calls have been joined into one conference call.

Call Termination

To end a call in progress, momentarily press the PHONE button. Only the active call(s) will be terminated and if there is a call on hold, it will become the new active call. If the active call is terminated by the far end, a call on hold may not become active automatically. This is cell phone-dependent. To bring the call back from hold, press and hold the PHONE button until you hear a single beep.

Redial

- Press the PHONE button to begin.
- After the "Ready" prompt and the following beep, say "Redial."
- The uconnect® phone will call the last number that was dialed from your cellular phone.

NOTE: This may not be the last number dialed from the uconnect® phone.

Call Continuation

Call continuation is the progression of a phone call on the uconnect® phone after the vehicle ignition key has been switched to OFF. Call continuation functionality available on the vehicle can be any one of three types:

- After the ignition key is switched to OFF, a call can continue on the uconnect® phone either until the call ends, or until the vehicle battery condition dictates cessation of the call on the uconnect® phone and transfer of the call to the cellular phone.
- After the ignition key is switched to OFF, a call can continue on the uconnect® phone for a certain duration, after which the call is automatically transferred from the uconnect® phone to the cellular phone.
- An active call is automatically transferred to the cellular phone after the ignition key is switched to OFF.

uconnect® phone Features

Language Selection

To change the language that the uconnect® phone is using:

- Press the PHONE button to begin.
- After the "Ready" prompt and the following beep, say the name of the language you wish to switch to English, Espanol, or Francais.
- Continue to follow the system prompts to complete the language selection.

After selecting one of the languages, all prompts and voice commands will be in that language.

NOTE: After every uconnect® phone language change operation, only the language-specific 32-name phonebook is usable. The paired phone name is not language-specific and usable across all languages.

Emergency Assistance

If you are in an emergency and the cellular phone is reachable:

- Pick up the phone and manually dial the emergency number for your area.

If the phone is not reachable and the uconnect® phone is operational, you may reach the emergency number as follows:

- Press the PHONE button to begin.
- After the "Ready" prompt and the following beep, say "Emergency" and the uconnect® phone will instruct the paired cellular phone to call the emergency number. This feature is supported in the U.S., Canada, and Mexico.

NOTE:

- The emergency number dialed is based on the country where the vehicle is purchased (911 for the U.S. and Canada and 060 for Mexico). The number dialed may not be applicable with the available cellular service and area.
- If supported, this number may be programmable on some systems. To do this, press the PHONE button and say 'Setup', followed by 'Emergency'.
- The uconnect® phone does slightly lower your chances of successfully making a phone call as to that for the cell phone directly.

WARNING!

Your phone must be turned on and paired to the uconnect® phone to allow use of this vehicle feature in emergency situations, when the cell phone has network coverage and stays paired to the uconnect® phone.

Towing Assistance

If you need towing assistance:

- Press the PHONE button to begin.

- After the "Ready" prompt and the following beep, say "Towing Assistance."

NOTE:

- The towing assistance number dialed is based on the country where the vehicle is purchased (1-800-528-2069 for the U.S., 1-877-213-4525 for Canada, 55-14-3454 for Mexico City and 1-800-712-3040 for outside Mexico City in Mexico).
- If supported, this number may be programmable on some systems. To do this, press the PHONE button and say "Setup", followed by "Towing Assistance".

Paging

To learn how to page, refer to "Working with Automated Systems." Paging works properly except for pagers of certain companies, which time out a little too soon to work properly with the uconnect® phone.

Voice Mail Calling

To learn how to access your voice mail, refer to "Working with Automated Systems."

Working with Automated Systems

This method is used in instances where one generally has to press numbers on the cellular phone keypad while navigating through an automated telephone system.

You can use your uconnect® phone to access a voice mail system or an automated service, such as a paging service or automated customer service line. Some services require immediate response selection. In some instances, that may be too quick for use of the uconnect® phone.

When calling a number with your uconnect® phone that normally requires you to enter in a touch-tone sequence on your cellular phone keypad, you can press the VOICE RECOGNITION button and say the sequence you wish to enter, followed by the word "Send." For example, if required to enter your PIN followed with a pound, (3 7 4

6 #), you can press the VOICE RECOGNITION button and say, "3 7 4 6 # Send." Saying a number, or sequence of numbers, followed by "Send," is also to be used for navigating through an automated customer service center menu structure, and to leave a number on a pager.

You can also send stored uconnect® phonebook entries as tones for fast and easy access to voice mail and pager entries. To use this feature, dial the number you wish to call and then press the VOICE RECOGNITION button and say, "Send." The system will prompt you to enter the name or number and say the name of the phonebook entry you wish to send. The uconnect® phone will then send the corresponding phone number associated with the phonebook entry, as tones over the phone.

NOTE:

- You may not hear all of the tones due to cellular phone network configurations. This is normal.
- Some paging and voice mail systems have system time out settings that are too short and may not allow the use of this feature.

Barge In - Overriding Prompts

The "Voice Recognition" button can be used when you wish to skip part of a prompt and issue your voice recognition command immediately. For example, if a prompt is asking "Would you like to pair a phone, clear a...," you could press the VOICE RECOGNITION button and say, "Pair a Phone" to select that option without having to listen to the rest of the voice prompt.

Turning Confirmation Prompts ON/OFF

Turning confirmation prompts off will stop the system from confirming your choices (e.g., the uconnect® phone will not repeat a phone number before you dial it).

- Press the PHONE button to begin.

- After the "Ready" prompt and the following beep, say "Setup Confirmations." The uconnect® phone will play the current confirmation prompt status and you will be given the choice to change it.

Phone and Network Status Indicators

If available on the radio and/or on a premium display such as the instrument panel cluster, and supported by your cellular phone, the uconnect® phone will provide notification to inform you of your phone and network status when you are attempting to make a phone call using uconnect® phone. The status is given for roaming, network signal strength, phone battery strength, etc.

Dialing Using the Cellular Phone Keypad

You can dial a phone number with your cellular phone keypad and still use the uconnect® phone (while dialing via the cellular phone keypad, the user must exercise caution and take precautionary safety measures). By dialing a number with your paired Bluetooth® cellular phone, the audio will be played through your vehicle's audio system. The uconnect® phone will work the same as if you dial the number using voice recognition.

NOTE: Certain brands of cellular phones do not send the dial ring to the uconnect® phone to play it on the vehicle audio system, so you will not hear it. Under this situation, after successfully dialing a number the user may feel that the call did not go through even though the call is in progress. Once your call is answered, you will hear the audio.

Mute/Un-Mute (Mute OFF)

When you mute the uconnect® phone, you will still be able to hear the conversation coming from the other party, but the other party will not be able to hear you. In order to mute the uconnect® phone:

- Press the VOICE RECOGNITION button.
- Following the beep, say "Mute."

In order to un-mute the uconnect® phone:

- Press the VOICE RECOGNITION button.
- Following the beep, say "Mute off."

Advanced Phone Connectivity

Transfer Call to and from Cellular Phone

The uconnect® phone allows ongoing calls to be transferred from your cellular phone to the uconnect® phone without terminating the call. To transfer an ongoing call from your uconnect® phone paired cellular phone to the uconnect® phone or vice versa, press the VOICE RECOGNITION button and say "Transfer Call."

Connect or Disconnect Link Between the uconnect® phone and Cellular Phone

Your cellular phone can be paired with many different electronic devices, but can only be actively "connected" with one electronic device at a time.

If you would like to connect or disconnect the Bluetooth® connection between a uconnect® phone paired cellular phone and the uconnect® phone, follow the instructions described in your cellular phone User's Manual.

List Paired Cellular Phone Names

- Press the PHONE button to begin.
- After the "Ready" prompt and the following beep, say "Setup Phone Pairing."
- When prompted, say "List Phones."
- The uconnect® phone will play the phone names of all paired cellular phones in order from the highest to the lowest priority. To "select" or "delete" a paired phone being announced, press the VOICE RECOGNITION button and say "Select" or "Delete." Also, see the next two sections for an alternate way to "select" or "delete" a paired phone.

Select Another Cellular Phone

This feature allows you to select and start using another phone paired with the uconnect® phone.

- Press the PHONE button to begin.
- After the "Ready" prompt and the following beep, say "Setup Select Phone" and follow the prompts.
- You can also press the VOICE RECOGNITION button at any time while the list is being played, and then choose the phone that you wish to select.
- The selected phone will be used for the next phone call. If the selected phone is not available, the uconnect® phone will return to using the highest priority phone present in or near (approximately within 30 ft (9 m)) the vehicle.

Delete uconnect® phone Paired Cellular Phones

- Press the PHONE button to begin.
- After the "Ready" prompt and the following beep, say "Setup Phone Pairing."
- At the next prompt, say "Delete" and follow the prompts.
- You can also press the VOICE RECOGNITION button at any time while the list is being played, and then choose the phone you wish to delete.

Things You Should Know About Your uconnect® phone

uconnect® phone Tutorial

To hear a brief tutorial of the system features, press the PHONE button and say "uconnect® Tutorial."

Voice Training

For users experiencing difficulty with the system recognizing their voice commands or numbers, the uconnect® phone Voice Training feature may be used. To enter this training mode, follow one of the two following procedures:

From outside the uconnect® phone mode (e.g., from radio mode):

- Press and hold the VOICE RECOGNITION button for five seconds until the session begins, or,
- Press the VOICE RECOGNITION button and say the "Setup, Voice Training" command.

Repeat the words and phrases when prompted by the uconnect® phone. For best results, the Voice Training session should be completed when the vehicle is parked with the engine running, all windows closed, and the blower fan switched off.

This procedure may be repeated with a new user. The system will adapt to the last trained voice only.

To restore the Voice Recognition system to factory default settings, enter the Voice Training session via the above procedure and follow the prompts.

Voice Recognition (VR)

- For best performance, adjust the rearview mirror to provide at least ½ in (1 cm) gap between the overhead console (if equipped) and the mirror.
- Always wait for the beep before speaking.
- Speak normally, without pausing, just as you would speak to a person sitting a few feet/meters away from you.
- Make sure that no one other than you is speaking during a voice recognition period.

- Performance is maximized under:
  - low-to-medium blower setting,
  - low-to-medium vehicle speed,
  - low road noise,
  - smooth road surface,
  - fully closed windows,
  - dry weather condition.
- Even though the system is designed for users speaking in North American English, French, and Spanish accents, the system may not always work for some.
- When navigating through an automated system such as voice mail, or when sending a page, at the end of speaking the digit string, make sure to say "Send."
- Storing names in the phonebook when the vehicle is not in motion is recommended.
- It is not recommended to store similar sounding names in the uconnect® phonebook.
- Phonebook (Downloaded and uconnect® phone Local) name recognition rate is optimized when the entries are not similar.
- You can say "O" (letter "O") for "0" (zero). "800" must be spoken "eight-zero-zero."
- Even though international dialing for most number combinations is supported, some shortcut dialing number combinations may not be supported.
- In a convertible vehicle, system performance may be compromised with the convertible top down.

Far End Audio Performance

- Audio quality is maximized under:
  - low-to-medium blower setting,
  - low-to-medium vehicle speed,
  - low road noise,
  - smooth road surface,
  - fully closed windows,
  - dry weather conditions, and
  - operation from the driver's seat.
- Performance, such as audio clarity, echo, and loudness to a large degree rely on the phone and network, and not the uconnect® phone.
- Echo at the far end can sometimes be reduced by lowering the in-vehicle audio volume.
- In a convertible vehicle, system performance may be compromised with the convertible top down.

Bluetooth® Communication Link

Cellular phones have been found to lose connection to the uconnect® phone. When this happens, the connection can generally be reestablished by switching the phone off/on. Your cellular phone is recommended to remain in Bluetooth® ON mode.

Power-Up

After switching the ignition key from OFF to either the ON or ACC position, or after a language change, you must wait at least five seconds prior to using the system.

Voice Tree

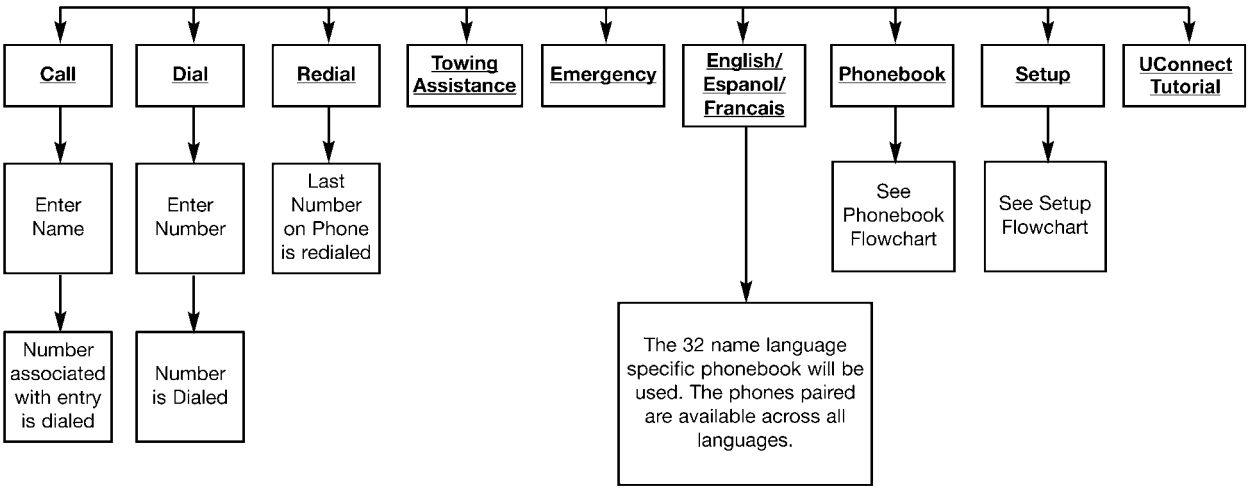

Note: Available Voice commands are shown in bold face and are underlined.

81c6bf7b

Voice Tree – Phonebook

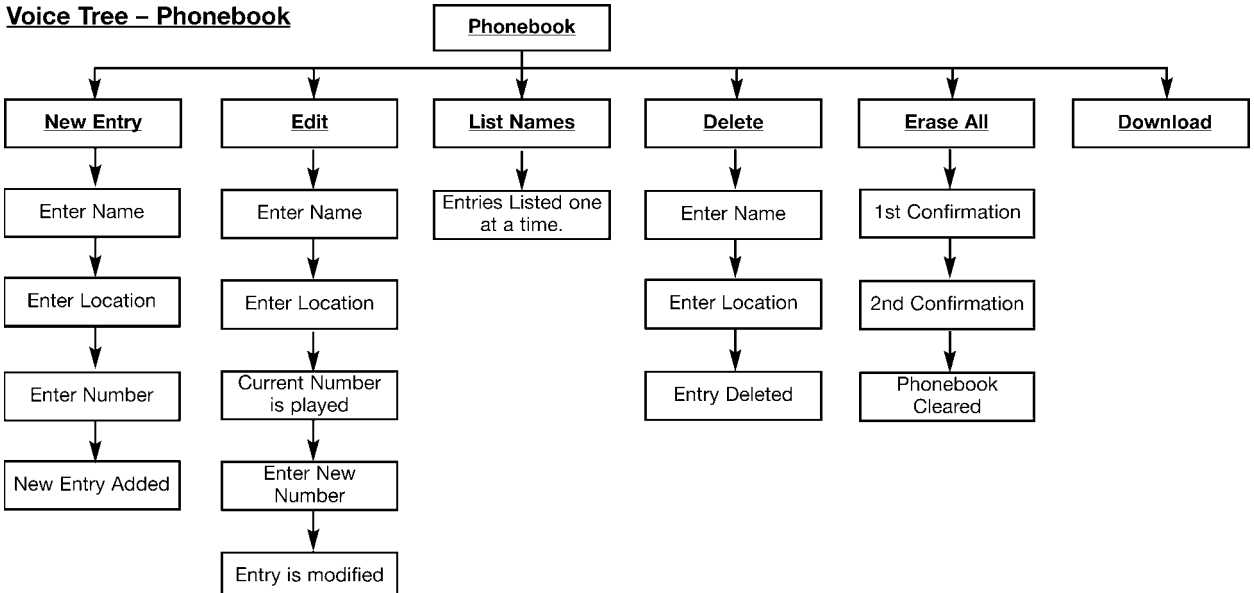

Note: **Available Voice commands are shown in bold face and are underlined.**

81c6bf80

Voice Tree – Setup

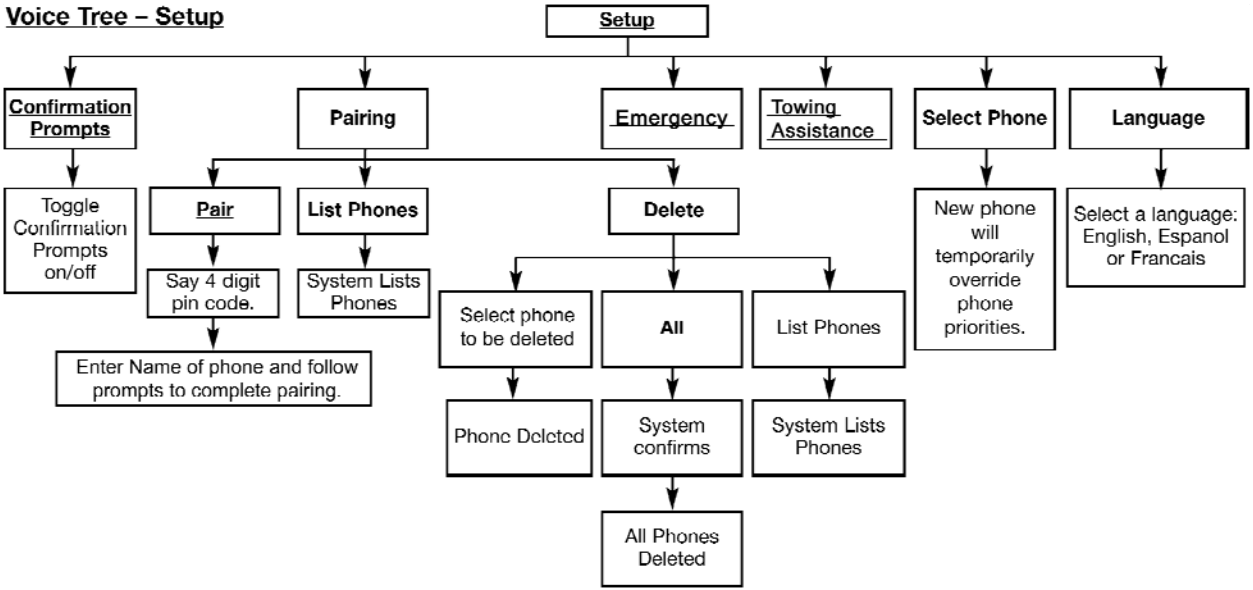

Note: **Available Voice commands are shown in bold face and are underlined.** 030605540

Voice Commands	
Primary	Alternate(s)
zero	
one	
two	
three	
four	
five	
six	
seven	
eight	
nine	
star (*)	
plus (+)	
pound (#)	
add location	
all	

Voice Commands	
Primary	Alternate(s)
call	
cancel	
confirmation prompts	
continue	
delete	
dial	
download	
edit	
emergency	
English	
erase all	
Espanol	
Francais	
help	
home	

Voice Commands	
Primary	Alternate(s)
language	
list names	
list phones	
mobile	
mute	
mute off	
new entry	
no	
pager	
pair a phone	
phone pairing	pairing
phonebook	phone book
previous	
record again	
redial	

Voice Commands	
Primary	Alternate(s)
return to main menu	return or main menu
select phone	select
send	
set up	phone settings or phone set up
towing assistance	
transfer call	
uconnect® Tutorial	
try again	
voice training	
work	
yes	

General Information

This device complies with Part 15 of the FCC rules and RSS 210 of Industry Canada. Operation is subject to the following conditions:

- Changes or modifications not expressly approved by the party responsible for compliance could void the user's authority to operate the equipment.
- This device may not cause harmful interference.
- This device must accept any interference received, including interference that may cause undesired operation.

VOICE RECOGNITION SYSTEM (VR) — IF EQUIPPED

Voice Recognition System (VR) Operation

This Voice Recognition system allows you to control your AM, FM radio, satellite radio, disc player, and a memo recorder.

NOTE: Take care to speak into the Voice Interface System as calmly and normally as possible. The ability of the Voice Interface System to recognize user voice commands may be negatively affected by rapid speaking or a raised voice level.

WARNING!

Any voice commanded system should be used only in safe driving conditions and all attention should be kept on the roadway ahead. Failure to do so may result in an accident causing serious injury or death.

When you press the VR button, you will hear a beep. The beep is your signal to give a command.

NOTE: If you do not say a command within a few seconds, the system will present you with a list of options.

If you ever wish to interrupt the system while it lists options, press the VR button, listen for the beep, and say your command.

Pressing the VR button while the system is speaking is known as "barging in." The system will be interrupted and after the beep you can add or change commands. This will become helpful once you start to learn the options.

NOTE: At any time, you can say the words "Cancel", "Help", or "Main Menu".

These commands are universal and can be used from any menu. All other commands can be used depending upon the active application.

For example, if you are in the disc menu and you are listening to FM radio, you can speak commands from the disc menu or from the FM radio menu.

When using this system, you should speak clearly and at a normal speaking volume.

The system will best recognize your speech if the windows are closed, and the heater/air-conditioning fan is set to low.

At any point, if the system does not recognize one of your commands, you will be prompted to repeat it.

To hear the first available Menu, press the VR button and say "Help" or "Main Menu".

Commands

The Voice Recognition system understands two types of commands. Universal commands are available at all times. Local commands are available if the supported radio mode is active.

Changing the Volume

1. Start a dialogue by pressing the VR button.

2. Say a command (e.g., "Help").

3. Use the ON/OFF VOLUME rotary knob to adjust the volume to a comfortable level while the Voice Recognition system is speaking. Please note the volume setting for VR is different than the audio system.

Main Menu

Start a dialogue by pressing the VR button. You may say "Main Menu" to switch to the main menu.

In this mode, you can say the following commands:

- "Radio" (to switch to the radio mode)
- "Disc" (to switch to the disc mode)
- "Memo" (to switch to the memo recorder)
- "System Setup" (to switch to system setup)

Radio AM (or Radio Long Wave or Radio Medium Wave — If Equipped)

To switch to the AM band say "AM" or "Radio AM". In this mode, you may say the following commands:

- "Frequency" (to change the frequency)
- "Next Station" (to select the next station)
- "Previous Station" (to select the previous station)
- "Radio Menu" (to switch to the radio menu)
- "Main Menu" (to switch to the main menu)

Radio FM
To switch to the FM band say "FM" or "Radio FM". In this mode, you may say the following commands:

- "Frequency" (to change the frequency)
- "Next Station" (to select the next station)
- "Previous Station" (to select the previous station)
- "Radio Menu" (to switch to the radio menu)
- "Main Menu" (to switch to the main menu)

Satellite Radio
To switch to satellite radio mode say "Sat" or "Satellite Radio". In this mode, you may say the following commands:

- "Channel Number" (to change the channel by its spoken number)
- "Next Channel" (to select the next channel)
- "Previous Channel" (to select the previous channel)
- "List Channel" (to hear a list of available channels)
- "Select Name" (to say the name of a channel)
- "Radio Menu" (to switch to the radio menu)
- "Main Menu" (to switch to the main menu)

Disc
To switch to the disc mode say "Disc". In this mode, you may say the following commands:

- "Track" (#) (to change the track)
- "Next Track" (to play the next track)
- "Previous Track" (to play the previous track)
- "Main Menu" (to switch to the main menu)

Memo

To switch to the voice recorder mode say "Memo". In this mode, you may say the following commands:

- "New Memo" (to record a new memo) — During the recording you may press the VR button to stop recording. You proceed by saying one of the following commands:
  - "Save" (to save the memo)
  - "Continue" (to continue recording)
  - "Delete" (to delete the recording)
- "Play Memos" (to play previously recorded memos) — During the playback you may press the VR button to stop playing memos. You proceed by saying one of the following commands:
  - "Repeat" (to repeat a memo)
  - "Next" (to play the next memo)
  - "Previous" (to play the previous memo)
  - "Delete" (to delete a memo)
- "Delete All" (to delete all memos)

System Setup

To switch to system setup say "Setup". In this mode, you may say the following commands:

- "Language German"
- "Language Dutch"
- "Language Italian"
- "Language English"
- "Language French"
- "Language Spanish"
- "Tutorial"
- "Voice Training"

NOTE: Keep in mind that you have to press the VR button first and wait for the beep before speaking the "Barge In" commands.

Voice Training

For users experiencing difficulty with the system recognizing their voice commands or numbers, uconnect® phone Voice Training feature may be used.

1. Press the VR button, say "System Setup" and once you are in that menu then say "Voice Training." This will train your own voice to the system and will improve recognition.

2. Repeat the words and phrases when prompted by uconnect® phone. For best results, the Voice Training session should be completed when the vehicle is parked, engine running, all windows closed, and the blower fan switched off. This procedure may be repeated with a new user. The system will adapt to the last trained voice only.

SEATS

Manual Seats — If Equipped

Seat Adjustment

The adjusting bar is at the front of the seat, near the floor. Pull the bar upward to move the seat forward or rearward. Release the bar once the seat is in the position desired. Then, using body pressure, move forward and rearward on the seat to be sure that the seat adjusters have latched.

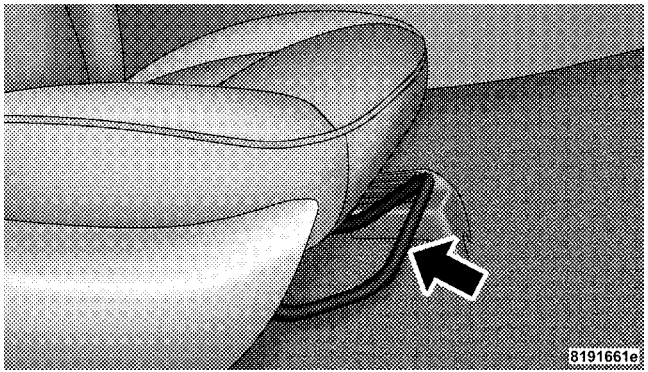

Manual Seat Adjusting Bar

WARNING!

- **Adjusting a seat while the vehicle is moving is dangerous. The sudden movement of the seat could cause you to lose control. The seat belt might not be properly adjusted and you could be injured. Adjust the seat only while the vehicle is parked.**
- **Do not ride with the seatback reclined so that the shoulder belt is no longer resting against your chest. In a collision you could slide under the seat belt and be seriously or even fatally injured. Use the recliner only when the vehicle is parked.**

Power Seats — If Equipped

The power seat switch is located on the outboard side of the seat near the floor. Use this switch to move the driver's seat up or down, forward or rearward or to recline the seatback. The passenger's seat will move up or down, forward or rearward.

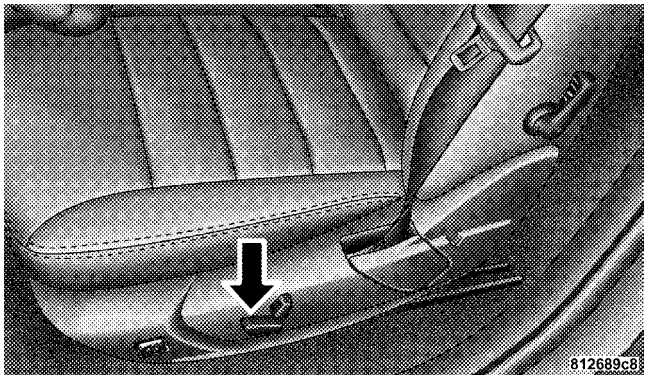

Power Seat Switch

WARNING!

Adjusting a seat while the vehicle is moving is dangerous. The sudden movement of the seat could cause you to lose control. The seat belt might not be properly adjusted and you could be injured. Adjust the seat only while the vehicle is parked.

CAUTION!

Do not place any article under a power seat as it may cause damage to the seat controls.

Power Reclining Seats — If Equipped

The recliner control is located on the outboard side of the seat.

Use the recline control to adjust the forward or rearward position of the seatback.

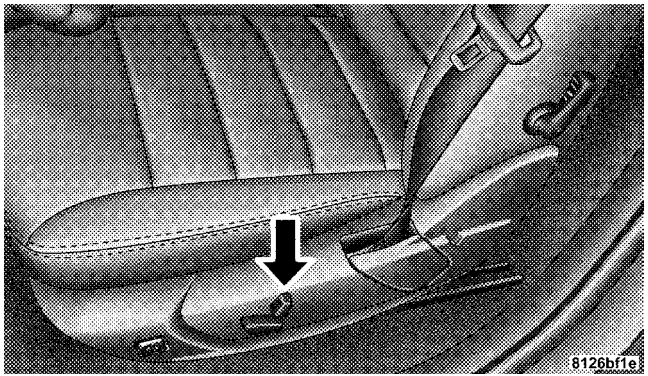

Power Seat Recline Switch

WARNING!

Do not ride with the seatback reclined so that the shoulder belt is no longer resting against your chest. In a collision you could slide under the seat belt and be seriously or even fatally injured. Use the recliner only when the vehicle is parked.

Lumbar Support — If Equipped

This feature allows you to increase or decrease the amount of lumbar support. Turn the control lever forward to increase and rearward to decrease the desired amount of lumbar support.

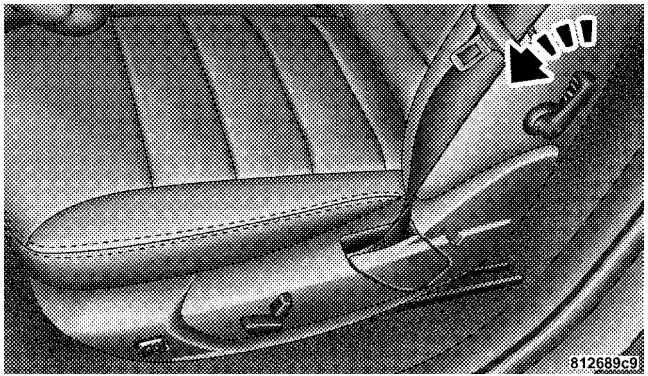

Lumbar Support Control Lever

Head Restraints

Head restraints can reduce the risk of whiplash injury in the event of impact from the rear. Adjust the restraint so that the upper edge is as high as practical. To raise it, pull upward on the head restraint. To lower it, press the button on the post guide and push downward on the head restraint.

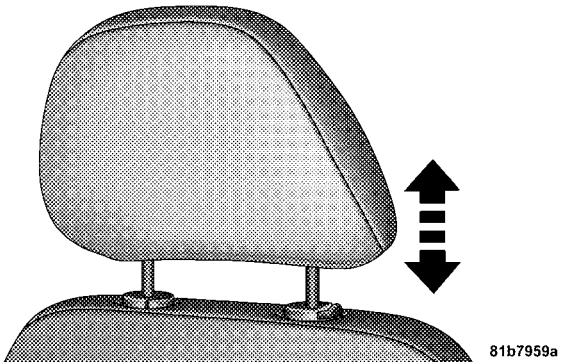

Adjustable Head Restraint

Heated Seats — If Equipped

This feature heats the front driver and passenger seats.

The controls for each front seat are located near the bottom center of the instrument panel.

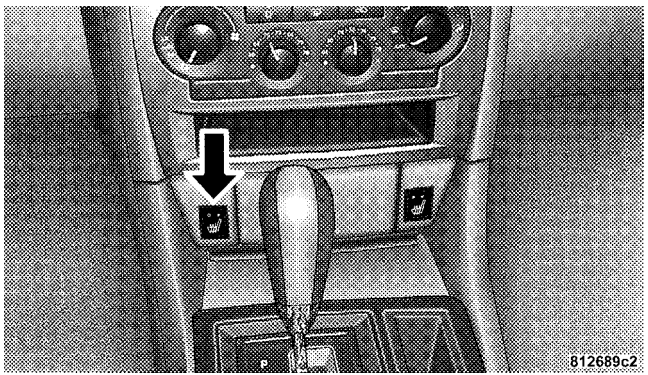

Front Heated Seat Switch

Press the switch once to select High-level heating. Press the switch a second time to select Low-level heating. Press the switch a third time to shut the heating elements Off. Two indicators will illuminate for High, one for Low, and none for Off.

If High-level heating is selected, the system will automatically switch to the Low-level after approximately 30 minutes of continuous operation. At that time, the number of indicators illuminated changes from two to one, indicating the change. Operation on the Low-level setting also turns off automatically after approximately 30 minutes.

NOTE: Once a heat setting is selected, heat will be felt within two to five minutes.

WARNING!

- **Persons who are unable to feel pain to the skin because of advanced age, chronic illness, diabetes, spinal cord injury, medication, alcohol use, exhaustion, or other physical conditions must exercise care when using the seat heater. It may cause burns even at low temperatures, especially if used for long periods.**
- **Do not place anything on the seat that insulates against heat, such as a blanket or cushion. This may cause the seat heater to overheat.**

Folding Rear Seat — If Equipped

On some models, the rear seatbacks can be folded forward to provide an additional storage area. Pull on the loops shown in the illustration to fold down either or both seatbacks. These loops can be tucked away when not in use.

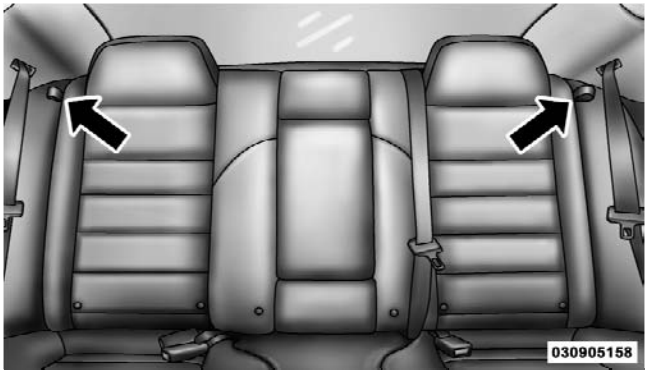

Folding Rear Seats

When the seatback is folded to the upright position, make sure it is latched by strongly pulling on the top of the seatback above the seat strap.

WARNING!

- **Be certain that the seatback is securely locked into position. If the seatback is not securely locked into position, the seat will not provide the proper stability for child seats and/or passengers. An improperly latched seat could cause serious injury.**
- **The cargo area in the rear of the vehicle (with the rear seatbacks in the locked-up or folded down position) should not be used as a play area by children when the vehicle is in motion. They could be seriously injured in an accident. Children should be seated and using the proper restraint system.**

TO OPEN AND CLOSE THE HOOD

Two latches must be released to open the hood.

1. Pull the hood release lever located under the left side of the instrument panel.

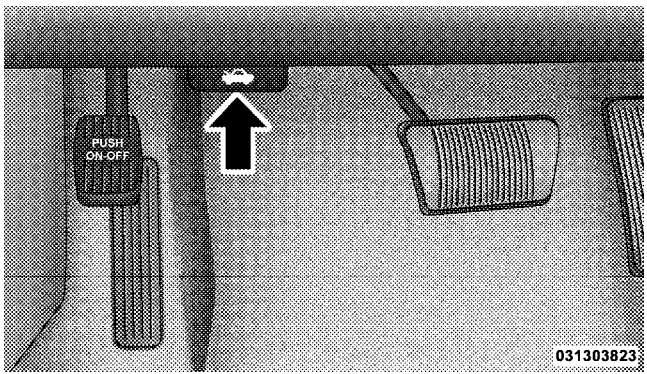

Hood Release Lever

2. Move to the outside of the vehicle and push the safety catch to the left. The safety catch is located under the center front edge of the hood.

Hood Safety Catch

Use the hood prop rod (if equipped) to secure the hood in the open position.

CAUTION!

To prevent possible damage, do not slam the hood to close it. Lower the hood, until it is open approximately 6 in (15 cm), and then drop it. This should secure both latches. Never drive your vehicle unless the hood is fully closed, with both latches engaged.

WARNING!

If the hood is not fully latched, it could fly up when the vehicle is moving and block your forward vision. You could have a collision. Be sure all hood latches are fully latched before driving.

LIGHTS

Headlight Switch

The headlight switch is located on the left side of the instrument panel. This switch controls the operation of the headlights, parking lights, instrument panel lights, instrument panel light dimming, interior lights and fog lights.

Headlight Switch

Rotate the headlight switch clockwise to the first detent for parking light and instrument panel light operation. Rotate the headlight switch to the second detent for headlight, parking light and instrument panel light operation.

Automatic Headlights — If Equipped

This system automatically turns the headlights on or off according to ambient light levels. To turn the system on, rotate the headlight switch counterclockwise to the AUTO (A) position. When the system is on, the headlight time delay feature is also on. This means the headlights will stay on for up to 90 seconds after you turn the ignition switch OFF. To turn the automatic system off, move the headlight switch out of the AUTO (A) position.

NOTE: The engine must be running before the headlights will come on in the automatic mode.

Headlights On with Wipers (Available with Auto Headlights Only)

When this feature is active, the headlights will turn on approximately 10 seconds after the wipers are turned on if the headlight switch is placed in the AUTO position. In addition, the headlights will turn off when the wipers are turned off if they were turned on by this feature.

The Headlights On with Wipers feature can be turned on or off through the Electronic Vehicle Information Center (EVIC) (if equipped). Refer to ”Headlights On with Wipers,” under “Personal Settings (Customer-Programmable Features)” under “Electronic Vehicle Information Center (EVIC)” in Section 4.

Headlight Time Delay

This feature provides the safety of headlight illumination for up to 90 seconds (programmable) when leaving your vehicle in an unlit area.

To activate the delay feature, turn OFF the ignition switch while the headlights are still on. Then, turn off the headlights within 45 seconds. The delay interval begins when the headlight switch is turned off.

If you turn the headlights, park lights or ignition switch ON again, the system will cancel the delay.

If you turn the headlights off before the ignition, they will turn off in the normal manner.

NOTE: The lights must be turned off within 45 seconds of turning the ignition OFF to activate this feature.

The headlight delay time is programmable on vehicles equipped with the EVIC. Refer to "Delay Turning Headlights Off," under "Personal Settings (Customer-Programmable Features)" under "Electronic Vehicle Information Center (EVIC)" in Section 4.

Daytime Running Lights — If Equipped

The high beam headlights will come on as Daytime Running Lights whenever the ignition switch is ON, the headlights are off and the parking brake is off. The headlight switch must be used for normal nighttime driving.

Lights-On Reminder

If the headlights or parking lights are on after the ignition is turned OFF, a chime will sound to alert the driver when the driver's door is opened.

Fog Lights — If Equipped

The front fog light switch is built into the headlight switch. To activate the front fog lights, turn on the parking lights or the low beam headlights and press the headlight switch. To turn off the front fog lights, either press the headlight switch a second time or turn off the headlight switch.

An indicator light in the instrument cluster illuminates when the fog lights are turned on.

NOTE: The fog lights will operate with the low beam headlights or parking lights on. However, selecting the high beam headlights will turn off the fog lights.

Multifunction Lever

The multifunction lever controls the operation of the turn signals, headlight beam selection and passing lights. The multifunction lever is located on the left side of the steering column.

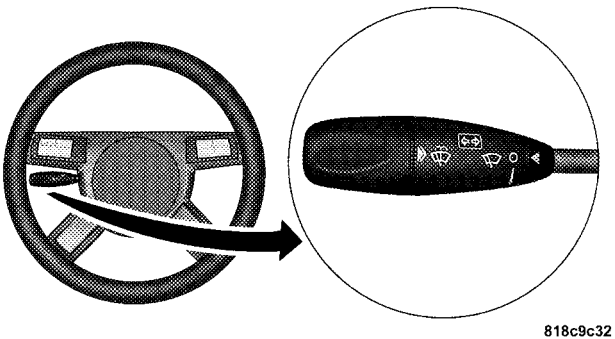

Multifunction Lever

Turn Signals

Move the multifunction lever up or down and the corresponding turn signal indicator in the instrument cluster flashes to show proper operation of the front and rear turn signal lights. You can also signal a lane change by moving the multifunction lever partially up or down without moving beyond the detent. Releasing the multifunction lever at the detent will provide three flashes.

If either indicator has a very fast flash rate, check for a defective outside light bulb. If an indicator fails to light when the multifunction lever is moved, see your authorized dealer for service.

NOTE: A “Turn Signal On” message will appear in the EVIC (if equipped) and a continuous chime will sound if the vehicle is driven more than 1 mile (1.6 km) with either turn signal on.

High Beam/Low Beam Select Switch
Push the multifunction lever away from you to switch the headlights to high beam. Pull the multifunction lever toward you to switch the headlights back to low beam.

Flash-to-Pass
You can signal another vehicle with your headlights by lightly pulling the multifunction lever toward you. This will cause the headlights to turn on at high beam and remain on until the multifunction lever is released.

Overhead Console Map/Reading Lights

These lights are mounted between the sun visors on the overhead console. Each light is turned on by pressing the lens. Press the lens a second time to turn off the light. These lights also turn on when a door is opened, or when the UNLOCK button on the Remote Keyless Entry (RKE) transmitter is pressed or when the dimmer control is turned fully upward, past the second detent.

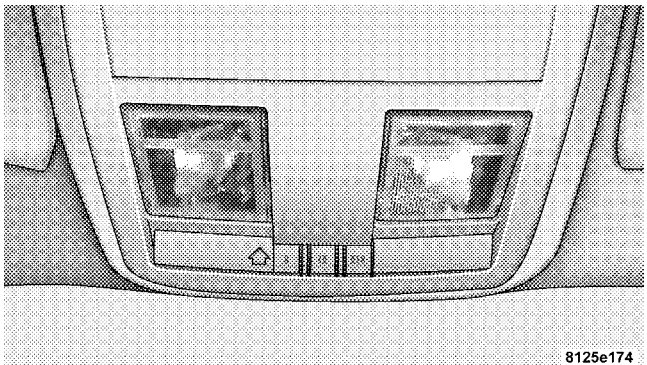

Overhead Console

Interior Lights

The interior lights come on when a door is opened.

To protect the battery, the interior lights will turn off automatically 10 minutes after the ignition switch is moved to the LOCK position. This will occur if the interior lights were switched on manually or are on

because a door is open. This includes the glove box light, but not the trunk light. To restore interior light operation, either turn the ignition switch ON or cycle the light switch.

Dimmer Control

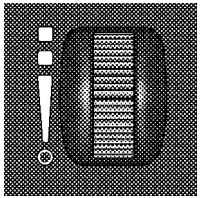

The dimmer control is part of the headlight switch and is located on the left side of the instrument panel. With the parking lights or headlights on, rotating the dimmer control upward will increase the brightness of the instrument panel lights and, if so equipped, the lighting in the door map pockets and cupholders.

Dome Light Position

Rotate the dimmer control completely upward to the second detent to turn on the interior lights. The interior lights will remain on when the dimmer control is in this position.

Interior Light Defeat (OFF)

Rotate the dimmer control to the extreme bottom off position. The interior lights will remain off when the doors are open.

Parade Mode (Daytime Brightness Feature)

Rotate the dimmer control upward to the first detent. This feature brightens all text displays such as the odometer, EVIC (if equipped), and radio when the parking lights or headlights are on.

WINDSHIELD WIPERS AND WASHERS

The multifunction lever operates the windshield wipers and washer when the ignition switch is in the ON position. The lever is located on the left side of the steering column.

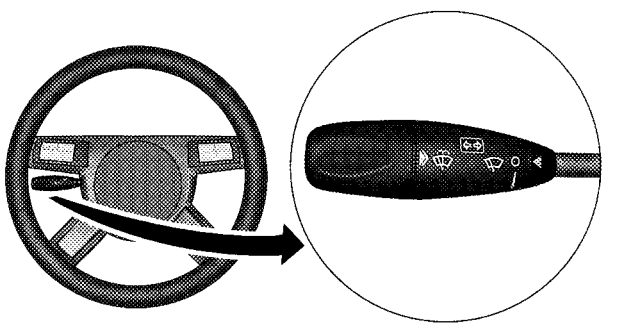

Windshield Wiper/Washer Control

Rotate the end of the multifunction lever to the first detent past the intermittent settings for low speed wiper operation, or to the second detent past the intermittent settings for high speed wiper operation.

CAUTION!

Turn the windshield wipers off when driving through an automatic car wash. Damage to the windshield wipers may result if the wiper switch is left in any position other than off.

Intermittent Wiper System

Use the intermittent wiper when weather conditions make a single wiping cycle with a variable pause between cycles desirable. Rotate the end of the multifunction lever to the first detent position, and then turn the end of the lever to select the desired delay interval. There are six delay settings, which allow you to regulate the

wipe interval from a minimum of one cycle every second to a maximum of approximately 23 seconds between cycles.

WARNING!

Sudden loss of visibility through the windshield could lead to an accident. You might not see other vehicles or other obstacles. To avoid sudden icing of the windshield during freezing weather, warm the windshield with the defroster before and during windshield washer use.

Mist Feature

Push the multifunction lever inward (toward the steering column) to the first detent to activate a single wipe cycle to clear off road mist or spray from a passing vehicle. The wipers will continue to operate until you release the lever.

Windshield Washers

To use the washer, push the multifunction lever inward (toward the steering column) to the second detent and hold it for as long as washer spray is desired.

If you activate the washer while the windshield wiper control is in the delay range, the wipers will operate for two wipe cycles after releasing the lever and then resume the intermittent interval previously selected.

If you activate the washer while the windshield wiper is turned off, the wipers will operate for three wipe cycles and then turn off.

Headlights On with Wipers (Available with Auto Headlights Only)

When this feature is active, the headlights will turn on approximately 10 seconds after the wipers are turned on if the headlight switch is placed in the AUTO position. In addition, the headlights will turn off when the wipers are turned off if they were turned on by this feature.

The "Headlights On with Wipers" feature can be turned on or off through the Electronic Vehicle Information Center (EVIC) (if equipped). Refer to "Headlights On with Wipers," under "Personal Settings (Customer-Programmable Features)" under "Electronic Vehicle Information Center (EVIC)" in Section 4.

TILT/TELESCOPING STEERING COLUMN

This feature allows you to tilt the steering column upward or downward. It also allows you to lengthen or shorten the steering column. The tilt/telescoping control handle is located below the steering wheel at the end of the steering column.

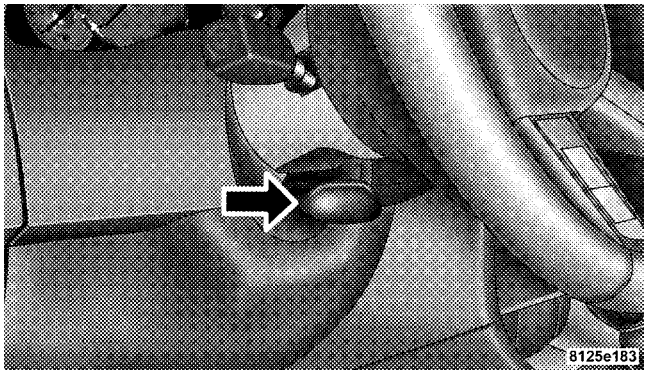

To unlock the steering column, pull the control handle outward. To tilt the steering column, move the steering wheel upward or downward as desired. To lengthen or shorten the steering column, pull the steering wheel outward or push it inward as desired. To lock the steering column in position, push the control handle inward until fully engaged.

WARNING!

Do not adjust the steering wheel while driving. The telescoping adjustment must be locked while driving. Adjusting the steering wheel while driving or driving without the telescoping adjustment locked could cause the driver to lose control of the vehicle.

ADJUSTABLE PEDALS — IF EQUIPPED

The adjustable pedals system is designed to allow a greater range of driver comfort for steering wheel tilt and seat position. This feature allows both the brake and accelerator pedal to move toward or away from the driver to provide improved position with the steering wheel. The switch is located on the front side of the driver's seat cushion side shield.

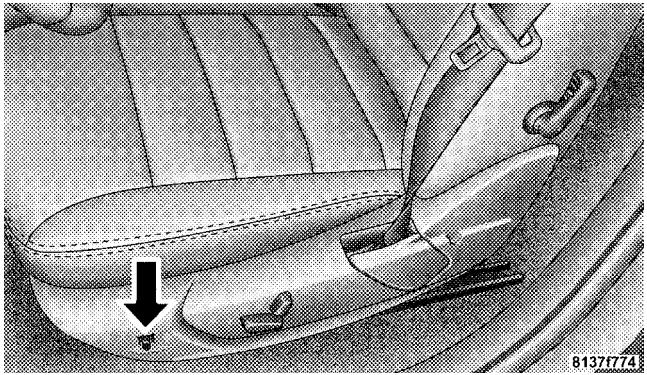

Adjustable Pedals Switch

Press the switch forward to move the pedals forward (toward the front of the vehicle).

Press the switch rearward to move the pedals rearward (toward the driver).

- The pedals can be adjusted with the ignition OFF.

- The pedals can be adjusted while driving.
- The pedals **cannot** be adjusted when the transmission is in REVERSE or when the speed control is on.

CAUTION!

Do not place any article under the adjustable pedals or impede its ability to move as it may cause damage to the pedal controls. Pedal travel may become limited if movement is stopped by an obstruction in the adjustable pedal's path.

ELECTRONIC SPEED CONTROL

When engaged, Electronic Speed Control takes over the accelerator operation at speeds greater than 25 mph (40 km/h).

The Electronic Speed Control lever located on the right side of the steering wheel operates the system.

81bc4c2c

1 — CANCEL
2 — RESUME ACCEL
3 — ON/OFF
4 — SET DECEL

To Activate

Push and release the ON/OFF button located on the end of the Electronic Speed Control lever. The indicator light in the instrument cluster will illuminate to show that the speed control system is on. To turn the system off, push and release the ON/OFF button again. The system and the indicator light will turn off.

WARNING!

Leaving the Electronic Speed Control system on when not in use is dangerous. You could accidentally set the system or cause it to go faster than you want. You could lose control and have an accident. Always leave the Electronic Speed Control system off when you are not using it.

To Set At A Desired Speed

When the vehicle reaches the speed desired, push the lever downward to SET DECEL and release. Remove your foot from the accelerator pedal and the vehicle will operate at the selected speed.

NOTE:

- Electronic Speed Control will only function in 3rd, 4th, or 5th gear when in the Autostick® mode (if equipped).
- The Electronic Speed Control may not engage if a different size tire is installed on one wheel, such as the compact spare tire.

To Deactivate

The system will disable Electronic Speed Control without erasing the memory if you:

- Softly tap the brake pedal,
- Depress the brake pedal, or

- Pull the Electronic Speed Control lever toward you to CANCEL.

Pushing and releasing the ON/OFF button or turning off the ignition erases the set speed from memory.

To Resume Speed

If you deactivated the Electronic Speed Control without erasing the set speed from memory and your vehicle speed is above 20 mph (32 km/h) you can resume the previous set speed. To do so, push the lever upward to RESUME ACCEL and release. Then remove your foot from the accelerator pedal.

To Vary the Speed Setting

When the Electronic Speed Control is set, you can increase speed by pushing up and holding the Electronic Speed Control lever in RESUME ACCEL. When the Electronic Speed Control lever is released, a new set speed will be established.

Tapping the Electronic Speed Control lever to RESUME ACCEL once will result in a 1 mph (1.6 km/h) speed increase. Each time the Electronic Speed Control lever is tapped speed increases, so tapping the Electronic Speed Control lever three times will increase speed by 3 mph (4.8 km/h), etc.

To decrease speed while Electronic Speed Control is set, push down and hold the Electronic Speed Control lever in SET DECEL. Release the Electronic Speed Control lever when the desired speed is reached, and a new set speed will be established.

Tapping the Electronic Speed Control lever to SET DECEL once will result in a 1 mph (1.6 km/h) speed decrease. Each time the Electronic Speed Control lever is tapped, speed decreases.

To Accelerate For Passing

Depress the accelerator as you would normally. When the pedal is released, the vehicle will return to the set speed.

Using Electronic Speed Control on Hills

NOTE: The Electronic Speed Control system maintains speed up and down hills. A slight speed change on moderate hills is normal.

The automatic transmission will downshift while climbing uphill or descending downhill. This downshift is necessary to maintain vehicle set speed.

On steep hills, a greater speed loss or gain may occur, so it may be preferable to drive without Electronic Speed Control.

WARNING!

Electronic Speed Control can be dangerous where the system cannot maintain a constant speed. Your vehicle could go too fast for the conditions and you could lose control. An accident could be the result. Do not use Electronic Speed Control in heavy traffic or on roads that are winding, icy, snow-covered or slippery.

OVERHEAD CONSOLE

The overhead console contains courtesy/reading lights, an optional universal garage door opener (HomeLink®), storage for sunglasses, and an optional power sunroof switch.

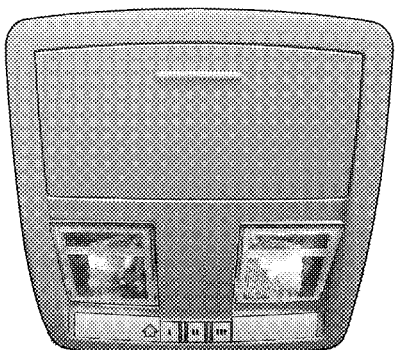

8125e191

Overhead Console

Courtesy/Reading Lights

At the forward end of the console are two courtesy/reading lights.

Press the lens to turn on the light. Press it a second time to turn off the light.

These lights also turn on when a door is opened, or when the UNLOCK button on the Remote Keyless Entry (RKE) transmitter is pressed, or when the dimmer control is turned fully upward, past the second detent.

Sunglasses Storage

At the rear of the console, a compartment is provided for the storage of a pair of sunglasses.

The storage compartment access is a "push/push" design. Push on the raised bar on the compartment door to open. Push on the raised bar to close.

GARAGE DOOR OPENER — IF EQUIPPED

HomeLink® replaces up to three remote controls (hand-held transmitters) that operate devices such as garage door openers, motorized gates, lighting, or home security systems. The HomeLink® unit operates off your vehicle's battery.

The HomeLink® buttons are located in the overhead console, and contain one, two, or three dots/lines designating the different HomeLink® channels.

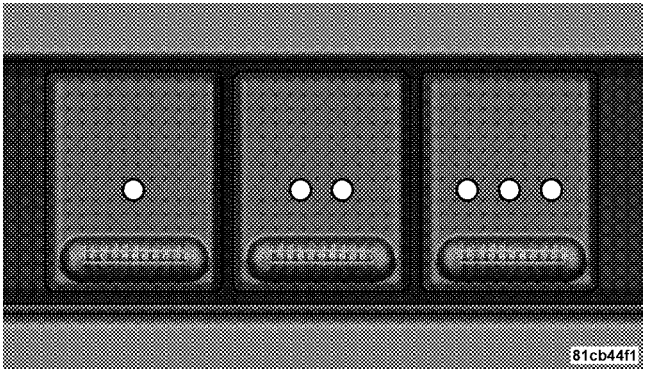

HomeLink® Buttons

NOTE: HomeLink® is disabled when the Vehicle Security Alarm is active.

WARNING!

- **Your motorized door or gate will open and close while you are training the Universal Transceiver. Do not train the transceiver if people or pets are in the path of the door or gate. Only use this transceiver with a garage door opener that has a "stop and reverse" feature as required by federal safety standards. This includes most garage door opener models manufactured after 1982. Do not use a garage door opener without these safety features. Call toll-free 1–800–355–3515 or, on the Internet at www.HomeLink.com for safety information or assistance.**
- **Vehicle exhaust contains carbon monoxide, a dangerous gas. Do not run your vehicle in the garage while training the transceiver. Exhaust gas can cause serious injury or death.**

Programming HomeLink®

Before You Begin

If you have not trained any of the HomeLink® buttons, erase all channels before you begin training.

To do this, press and hold the two outside buttons for up to 20 seconds. The EVIC will display "CLEARING CHANNELS." Release the buttons when the EVIC message states "CHANNELS CLEARED."

It is recommended that a new battery be placed in the hand-held transmitter of the device being programmed to HomeLink® for more efficient training and accurate transmission of the radio-frequency signal.

Your vehicle should be parked outside of the garage while training.

1. Turn the ignition switch to the ON/RUN position.

2. Place the hand-held transmitter 1 to 3 in (3 to 8 cm) from the HomeLink® buttons while keeping the EVIC display in view.

For optimal training, point the battery end of the hand-held transmitter away from the HomeLink®.

3. Simultaneously, press and hold both the chosen HomeLink® button and the hand-held transmitter button until the EVIC display changes from "CHANNEL # TRAINING" to "CHANNEL # TRAINED."

Then release both the HomeLink® and hand-held transmitter buttons.

If the EVIC display states "DID NOT TRAIN" repeat Step 3. If the signal is too weak, replace the battery in the original hand-held transmitter.

It may take up to 30 seconds, or longer, in rare cases. The garage door may open and close while you train.

NOTE: Some gate operators and garage door openers may require you to replace Step 3 with procedures noted in the "Gate Operator/Canadian Programming" section.

4. Press and hold the just-trained HomeLink® button. If the channel has been trained, the EVIC display will now state "CHANNEL # TRANSMIT."

If the EVIC display still states "CHANNEL # TRAINING" repeat Step 3.

NOTE: After training a HomeLink® channel, if the garage door does not operate with HomeLink® and the garage door opener was manufactured after 1995, the garage door opener may have rolling code. If so, proceed to the heading "Programming A Rolling Code System."

5. PROGRAMMING A ROLLING CODE SYSTEM

At the garage door opener motor (in the garage), locate the "learn" or "training" button.

This can usually be found where the hanging antenna wire is attached to the garage door opener motor (it is NOT the button normally used to open and close the door).

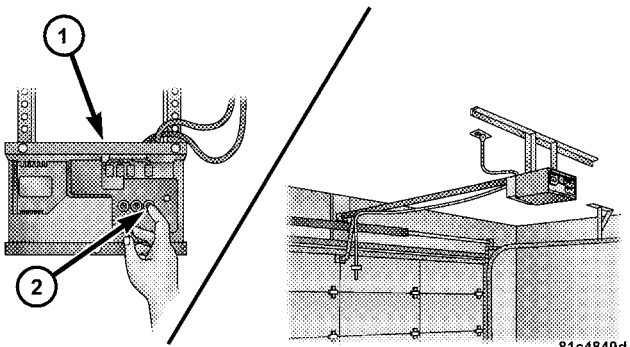

1 — Garage Door Opener
2 — Training Button

6. Firmly press and release the "learn" or "training" button. The name and color of the button may vary by manufacturer.

NOTE: There are 30 seconds in which to initiate the next step after the "Learn" button has been pressed.

7. Return to the vehicle and press the programmed HomeLink® button twice (holding the button for two seconds each time). If the device is plugged in and activates, programming is complete.

If the device does not activate, press the button a third time (for two seconds) to complete the training.

If you have any problems, or require assistance, please call toll-free 1–800–355–3515 or, on the Internet at www.HomeLink.com for information or assistance.

To program the remaining two HomeLink® buttons, repeat each step for each remaining button. DO NOT erase the channels.

Gate Operator/Canadian Programming

Canadian radio-frequency laws require transmitter signals to "time-out" (or quit) after several seconds of transmission – which may not be long enough for HomeLink® to pick up the signal during programming. Similar to this Canadian law, some U.S. gate operators are designed to "time-out" in the same manner.

It may be helpful to unplug the device during the cycling process to prevent possible overheating of the garage door or gate motor.

If you are having difficulties programming a garage door opener or a gate operator, replace "Programming HomeLink" Step 3 with the following:

3. Continue to press and hold the HomeLink® button while you press and release - every two seconds ("cycle") your hand-held transmitter until HomeLink® has successfully accepted the frequency signal. The EVIC display will change from "CHANNEL # TRAINING" to "CHANNEL # TRAINED."

If you unplugged the device for training, plug it back in at this time.

Then proceed with Step 4 under "Programming HomeLink®" earlier in this section.

Using HomeLink®

To operate, simply press and release the programmed HomeLink® button. Activation will now occur for the trained device (i.e., garage door opener, gate operator, security system, entry door lock, home/office lighting, etc.) The hand-held transmitter of the device may also be used at any time.

Reprogramming A Single HomeLink® Button

To reprogram a channel that has been previously trained, follow these steps:

1. Turn the ignition switch to the ON/RUN position.

2. Press and hold the desired HomeLink® button for 20 seconds until the EVIC display states "CHANNEL # TRAINING." **Do not release the button.**

3. **Without releasing the button,** proceed with Programming HomeLink® Step 2 and follow all remaining steps.

Security

It is advised to erase all channels before you sell or turn in your vehicle.

To do this, press and hold the two outside buttons for 20 seconds until the EVIC message states "CHANNELS CLEARED." Note that all channels will be erased. Individual channels cannot be erased.

The HomeLink® Universal Transceiver is disabled when the Vehicle Security Alarm is active.

Troubleshooting Tips

If you are having trouble programming HomeLink®, here are some of the most common solutions:

- Replace the battery in the original transmitter.
- Press the learn button on the garage door opener to complete the training for rolling code.
- Did you unplug the device for training, and remember to plug it back in?

If you are having any problems or require assistance, please call toll-free 1–800–355–3515 or, on the Internet at www.HomeLink.com for information or assistance.

General Information

This device complies with FCC rules Part 15 and Industry Canada RSS-210. Operation is subject to the following two conditions:

1. This device may not cause harmful interference

2. This device must accept any interference that may be received including interference that may cause undesired operation

NOTE: The transmitter has been tested and it complies with FCC and IC rules. Changes or modifications not expressly approved by the party responsible for compliance could void the user's authority to operate the device.

The term "IC:" before the certification/registration number only signifies that Industry Canada technical specifications were met.

POWER SUNROOF — IF EQUIPPED

The power sunroof switch is located between the sun visors on the overhead console.

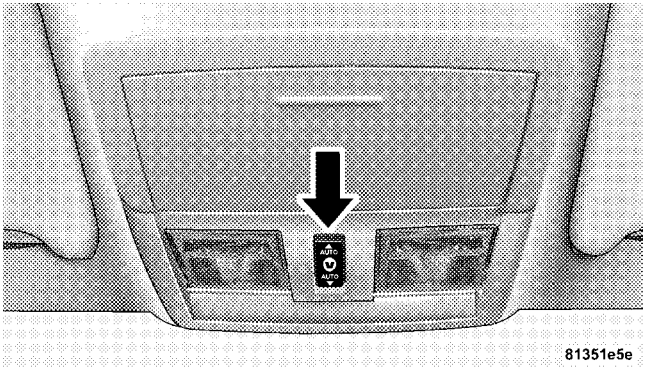

Power Sunroof Controls

WARNING!

- **Never leave children in a vehicle with the key in the ignition switch. Occupants, particularly unattended children, can become entrapped by the power sunroof while operating the power sunroof switch. Such entrapment may result in serious injury or death.**
- **In an accident, there is a greater risk of being thrown from a vehicle with an open sunroof. You could also be seriously injured or killed. Always fasten your seat belt properly and make sure all passengers are also properly secured.**
- **Do not allow small children to operate the sunroof. Never allow fingers or other body parts, or any object, to project through the sunroof opening. Injury may result.**

Opening Sunroof — Express

Press the switch rearward and release, and the sunroof will open automatically from any position. The sunroof will open fully and then stop automatically. This is called "Express Open". During Express Open operation, any movement of the sunroof switch will stop the sunroof.

Closing Sunroof — Express

Press the switch forward and release, and the sunroof will close automatically from any position. The sunroof will close fully and stop automatically. This is called "Express Close". During Express Close operation, any movement of the sunroof switch will stop the sunroof.

Pinch Protect Feature

This feature will detect an obstruction in the opening of the sunroof during Express Close operation. If an obstruction in the path of the sunroof is detected, the

sunroof will automatically retract. Remove the obstruction if this occurs. Next, press the switch forward and release to Express Close.

Pinch Protect Override

If a known obstruction (ice, debris, etc.) prevents closing, press the switch forward and hold for two seconds after the reversal occurs. This allows the sunroof to move toward the closed position.

NOTE: Pinch protection is disabled while the switch is pressed.

Venting Sunroof — Express

Press and release the "V" button in the center of the switch, and the sunroof will open to the vent position. This is called "Express Vent", which operates regardless of sunroof position. During Express Vent operation, any movement of the sunroof switch will stop the sunroof.

Sunshade Operation

The sunshade can be opened manually. However, the sunshade will open automatically as the sunroof opens.

NOTE: The sunshade cannot be closed if the sunroof is open.

Wind Buffeting

Wind buffeting can be described as the perception of pressure on the ears or a helicopter-type sound in the ears. Your vehicle may exhibit wind buffeting with the windows down, or the sunroof (if equipped) in certain open or partially open positions. This is a normal occurrence and can be minimized. If the buffeting occurs with the rear windows open, then open the front and rear windows together to minimize the buffeting. If the buffeting occurs with the sunroof open, then adjust the sunroof opening to minimize the buffeting or open any window.

Sunroof Maintenance

Use only a nonabrasive cleaner and a soft cloth to clean the glass panel.

Ignition Off Operation

For vehicles not equipped with the Electronic Vehicle Information Center (EVIC), the power sunroof switch will remain active for 10 minutes after the ignition switch is turned OFF. Opening either front door will cancel this feature.

For vehicles equipped with the EVIC, the power sunroof switch will remain active for up to 60 minutes after the ignition switch is turned OFF. Opening either front door will cancel this feature. The time is programmable. Refer to "Delay Power Off to Accessories Until Exit," under "Personal Settings (Customer-Programmable Features)" under "Electronic Vehicle Information Center (EVIC)" in Section 4.

Sunroof Fully Closed

Press the switch forward and release to ensure that the sunroof is fully closed.

ELECTRICAL POWER OUTLETS

There are two 12-Volt electrical outlets on this vehicle. Both of the outlets are protected by a fuse.

The 12-Volt power outlet next to the ash receiver tray (if equipped with an optional Smoker's Package) has power available only when the ignition is ON. This outlet will also operate a conventional cigar lighter unit.

WARNING!

Do not place ashes inside the cubby bin located on the center console on vehicles not equipped with the ash receiver tray. A fire leading to bodily injury could result.

NOTE: If desired, the power outlet next to the ash receiver tray (if equipped) can be converted by your authorized dealer to provide power with the ignition switch in the LOCK position.

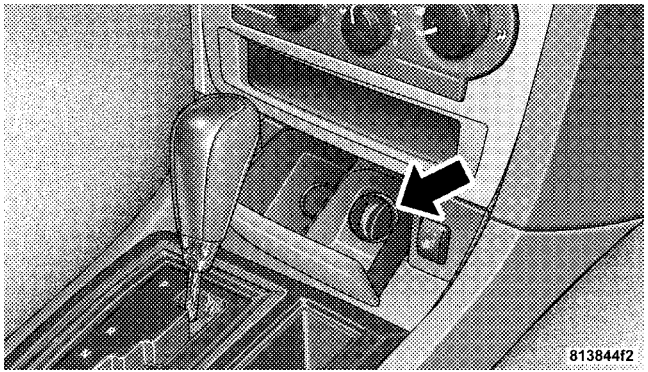

Front Power Outlet

The center console outlet is powered directly from the battery (power available at all times). Items plugged into this outlet may discharge the battery and/or prevent engine starting.

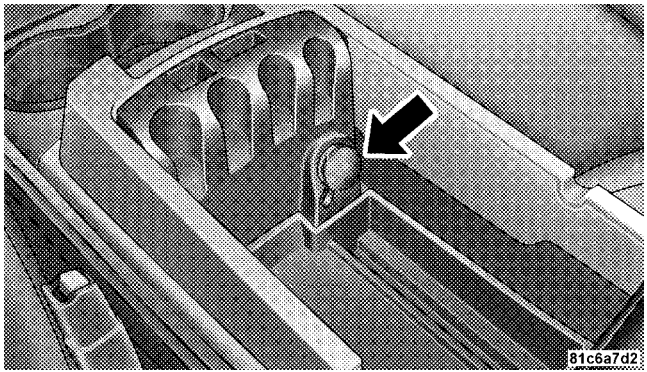

Center Console Power Outlet

WARNING!

To avoid serious injury or death:

- Do not use a three-prong adapter.
- Do not insert any objects into the receptacles.
- Do not touch with wet hands.
- Close the lid when not in use and while driving the vehicle.
- If this outlet is mishandled, it may cause an electric shock and failure.

CAUTION!

- Many accessories that can be plugged in draw power from the vehicle's battery even when not in use (i.e., cellular phones, etc.). Eventually, if plugged in long enough, the vehicle's battery will discharge sufficiently to degrade battery life and/or prevent engine starting.
- Accessories that draw higher power (i.e., coolers, vacuum cleaners, lights, etc.) will degrade the battery even more quickly. Only use these intermittently and with greater caution.
- After the use of high power draw accessories or long periods of the vehicle not being started (with accessories still plugged in), the vehicle must be driven a sufficient length of time to allow the alternator to recharge the vehicle's battery.

(Continued)

CAUTION! (Continued)

- **Power outlets are designed for accessory plugs only. Do not hang any type of accessory or accessory bracket from the plug. Improper use of the power outlet can cause damage.**

CUPHOLDERS

Front Seat Cupholders

The cupholders are located in the forward edge of the center console.

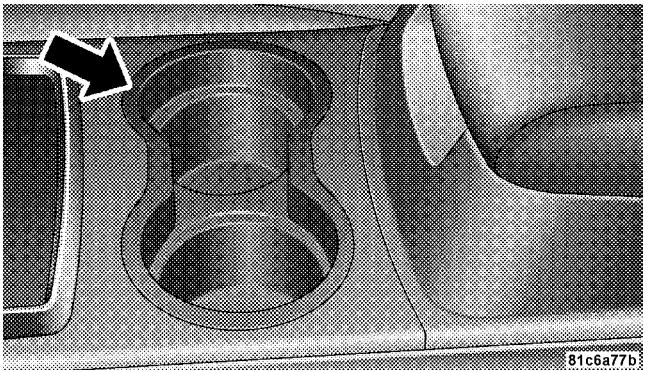

Front Seat Cupholders

Rear Seat Cupholders

The rear seat cupholders are located in the center armrest between the rear seats. The cupholders are positioned forward in the armrest and side-by-side to provide convenient access to beverage cans or bottles while maintaining a resting place for the rear occupants elbows.

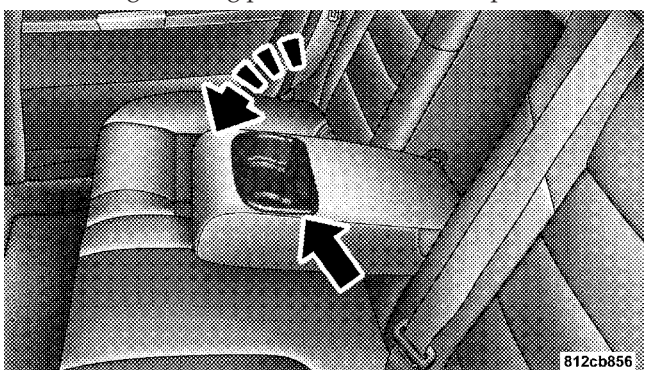

Rear Seat Cupholders

STORAGE

Console Features

The center console contains two shift bezel cubby bins with rubber mats for holding small items. For vehicles not equipped with navigation radio, the console also contains an extra storage bin located below the climate control, which holds up to four CD jewel cases.

Without Vehicle Entertainment System (VES®)

Two separate storage compartments are also located underneath the armrest.

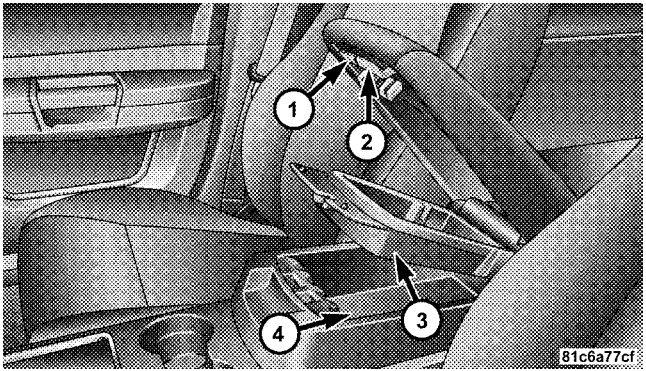

1 — Release button for bottom compartment
2 — Release button for top compartment
3 — Top Compartment
4 — Bottom Compartment. (You can access this compartment directly, without first exposing the upper compartment, by operating the Release Button for the bottom compartment with the armrest down.)

The top compartment holds small items, such as a pen and note pad, while the larger bottom compartment will hold CDs and alike. The bottom compartment also contains a 12-Volt power outlet and a molded-in coin holder (designed to hold various size coins). A slot in the left and right side of the top compartment provides clearance for power cords to pass conveniently out of the bin with the lid closed. This feature is ideal for games, laptop's, cellular phones, or other electrical equipment. The console's front opening lid allows for easy access to these compartments.

With Vehicle Entertainment System (VES®)

The center console contains a large storage compartment. The storage compartment contains a 12-Volt power outlet and a molded-in coin holder (designed to hold various size coins). A slot in the top left and right side of the storage compartment provides clearance for power cords to pass conveniently out of the compartment with the lid closed. This feature is ideal for games, laptop's, cellular phones, or other electrical equipment. The console's front-opening lid allows for easy access to the storage compartment for both the driver and the front passenger.

Cargo Area — Vehicles Equipped with 60/40 Split-Folding Rear Seat

The 60/40 split-folding rear seat provides cargo-carrying versatility. The seatbacks fold down easily by pulling nylon tabs between the seatbacks and the bolsters. When the seats are folded down, they provide a continuous, nearly-flat extension of the load floor.

When the seatback is folded to the upright position, make sure it is latched by strongly pulling on the top of the seatback above the seat strap.

WARNING!

- **Be certain that the seatback is securely locked into position. If the seatback is not securely locked into position, the seat will not provide the proper stability for child seats and/or passengers. An improperly latched seat could cause serious injury.**
- **The cargo area in the rear of the vehicle (with the rear seatbacks in the locked-up or folded down position) should not be used as a play area by children when the vehicle is in motion. They could be seriously injured in an accident. Children should be seated and using the proper restraint system.**

(Continued)

WARNING! (Continued)

- **To help protect against personal injury, passengers should not be seated in the rear cargo area. The rear cargo space is intended for load carrying purposes only, not for passengers, who should sit in seats and use seat belts.**

WARNING!

The weight and position of cargo and passengers can change the vehicle center of gravity and vehicle handling. To avoid loss of control resulting in personal injury, follow these guidelines for loading your vehicle:

- **Always place cargo evenly on the cargo floor. Put heavier objects as low and as far forward as possible.**

(Continued)

WARNING! (Continued)

- **Place as much cargo as possible in front of the rear axle. Too much weight or improperly placed weight over or behind the rear axle can cause the rear of the vehicle to sway.**
- **Do not pile luggage or cargo higher than the top of the seatback. This could impair visibility or become a dangerous projectile in a sudden stop or collision.**

REAR WINDOW FEATURES

Rear Window Defroster

The electric rear window defroster button is located on the climate control. Press this button to turn on the rear window defroster and the heated outside rearview mirrors (if equipped). An indicator in the button will illuminate when the rear window defroster is on. The rear window defroster automatically turns off after approximately 10 minutes. For an additional five minutes of operation, press the button a second time.

CAUTION!

- **To avoid damaging the electrical conductors of the rear window defroster, do not use scrapers, sharp instruments, or abrasive window cleaners on the interior surface of the window.**
- **Labels can be peeled off after soaking with warm water.**

LOAD LEVELING SYSTEM — IF EQUIPPED

The automatic load leveling system will provide a level-riding vehicle under most passenger and cargo loading conditions.

A hydraulic pump contained within the shock absorbers raises the rear of the vehicle to the correct height. It takes approximately 1 mile (1.6 km) of driving for the leveling to complete depending on road surface conditions.

If the leveled vehicle is not moved for approximately 15 hours, the leveling system will bleed itself down. The vehicle must be driven to reset the system.

UNDERSTANDING YOUR INSTRUMENT PANEL

CONTENTS

- Instrument Panel Features 169
- Instrument Cluster – Base 170
- Instrument Cluster – Premium 171
- Instrument Cluster Descriptions 172
- Electronic Vehicle Information Center (EVIC) – If Equipped 183
  - Electronic Vehicle Information Center (EVIC) Displays 185
  - Oil Change Required 186
  - Trip Functions 187
  - Automatic All Wheel Drive (AWD) Displays — If Equipped 189
  - Compass Display 190
  - Driver-Selectable Surround Sound (DSS) – If Equipped 192
  - uconnect® gps (Navigation) — If Equipped . . 193
  - Personal Settings (Customer-Programmable Features) 193
- Sales Code REQ — AM/FM Stereo Radio And 6–Disc CD/DVD Changer (MP3/WMA AUX Jack) 197

- □ Operating Instructions - Radio Mode 198
- □ Operation Instructions - (Disc Mode For CD And MP3/WMA Audio Play, DVD-Video) . . . 206
- □ Notes On Playing MP3/WMA Files 208
- □ List Button (Disc Mode For MP3/WMA Play) 210
- □ Info Button (Disc Mode For MP3/WMA Play) 210

■ AM/FM/CD/DVD Radio (RER/REN) – If Equipped 213

- □ Operating Instructions — Voice Recognition System (VR) — If Equipped 213
- □ Operating Instructions — uconnect® phone — If Equipped 213
- □ Clock Setting Procedure 213

■ Sales Code RES — AM/FM Stereo Radio With CD Player (MP3 AUX Jack) 215

- □ Operating Instructions — Radio Mode 216
- □ Operation Instructions — CD Mode For CD And MP3 Audio Play 219
- □ Notes On Playing MP3 Files 221
- □ Operation Instructions - Auxiliary Mode 223

■ Sales Code RES/RSC — AM/FM Stereo Radio With CD Player (MP3 AUX Jack) And Sirius Radio. 224

- □ Operating Instructions — Radio Mode 225
- □ Operation Instructions — CD Mode For CD And MP3 Audio Play 230
- □ Notes On Playing MP3 Files 232
- □ List Button (CD Mode For MP3 Play) 235

□ Info Button (CD Mode For MP3 Play) 235

■ Universal Consumer Interface (UCI) — If Equipped 236

□ Connecting The iPod® 237

□ Using This Feature 237

□ Controlling The iPod® Using Radio Buttons 237

□ Play Mode 238

□ List Or Browse Mode 239

■ uconnect® studios (Satellite Radio) — If Equipped (REN/REQ/RER/RES/REU Radios Only) 241

□ System Activation 241

□ Electronic Serial Number/Sirius Identification Number (ESN/SID) 242

□ Selecting uconnect® studios (Satellite) Mode 243

□ Satellite Antenna 243

□ Reception Quality 243

□ Operating Instructions — uconnect® studios (Satellite) Mode 243

□ Operating Instructions — uconnect® phone (If Equipped) 246

□ Operating Instructions — Video Entertainment System (VES)™ (If Equipped) 246

■ Kicker® High Performance Sound System With Driver-Selectable Surround (DSS) – If Equipped 246

■ uconnect studios® (Sirius Backseat TV™) — If Equipped 247

■ Video Entertainment System (VES)™ — If Equipped 248
■ Remote Sound System Controls 250
■ CD/DVD Maintenance 252
■ Radio Operation And Cellular Phones 252
■ Climate Controls 253
□ Manual Air Conditioning And Heating System 253
□ Automatic Temperature Control — If Equipped 256
□ Operating Tips 261

INSTRUMENT PANEL FEATURES

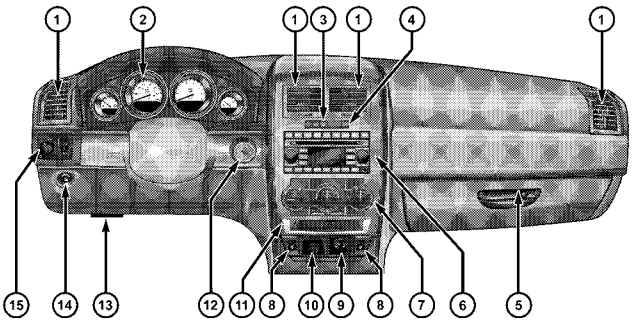

81cb31db

1 — Air Outlet
2 — Instrument Cluster
3 — Hazard Switch
4 — Electronic Stability Program OFF Button* / Traction Control System OFF Button*
5 — Glove Compartment
6 — Radio
7 — Climate Control
8 — Heated Seat Switch*
9 — Power Outlet
10 — Ash Tray*
11 — Storage Compartment*
12 — Ignition Switch
13 — Hood Release
14 — Trunk Release Switch
15 — Headlight Switch
* If Equipped

INSTRUMENT CLUSTER – BASE

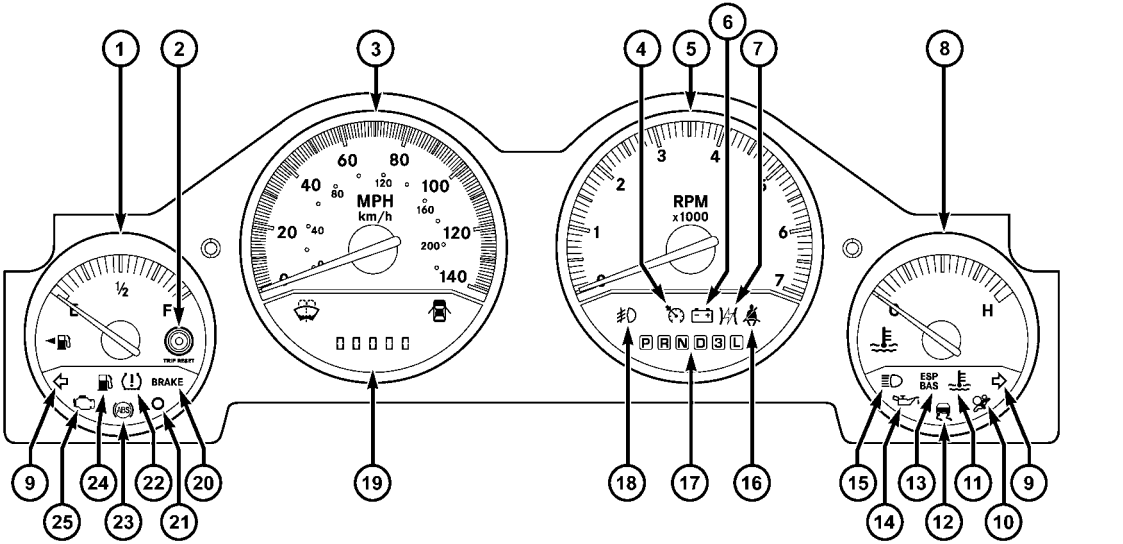

INSTRUMENT CLUSTER – PREMIUM

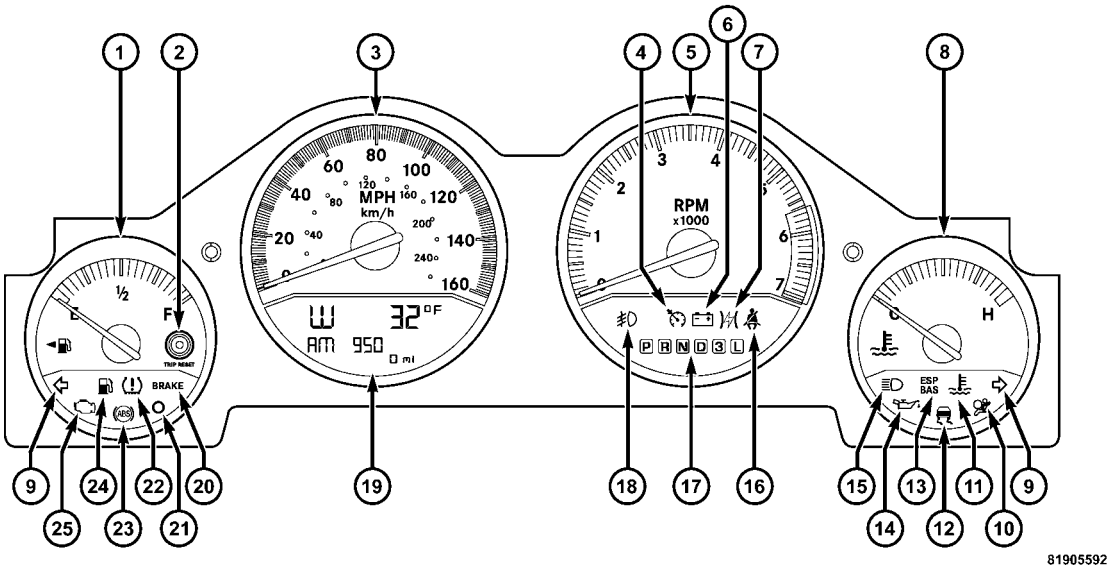

4

INSTRUMENT CLUSTER DESCRIPTIONS

1. Fuel Gauge

The pointer shows the level of fuel in the fuel tank when the ignition switch is in the ON position.

2. Trip Odometer Button

Base Cluster

The word "TRIP" will appear when this button is pressed. Push in and hold the button for two seconds when the trip odometer displays to reset it to 0 miles (km). A second press of the button will display the outside temperature in the odometer.

Premium Cluster

Press this button to change the display from odometer to either of two trip odometer settings. The letter "A" or "B" will appear when in the trip odometer mode. Push in and hold the button for two seconds to reset the trip odometer to 0 miles (km). The odometer must be in TRIP mode to reset it.

3. Speedometer

Indicates vehicle speed.

4. Electronic Speed Control Indicator Light — If Equipped

This light will turn on when the electronic speed control is ON.

5. Tachometer

The red segments indicate the maximum permissible engine revolutions per minute (RPM x 1000) for each gear range. Ease up on the accelerator before reaching the red area.

6. Charging System Light

This light shows the status of the electrical charging system. The light should come on when the ignition switch is first turned ON and remain on briefly as a bulb check. If the light stays on or comes on while driving, turn off some of the vehicle's non-essential electrical devices or increase engine speed (if at idle). If the charging system light remains on, it means that the vehicle is experiencing a problem with the charging system. Obtain SERVICE IMMEDIATELY. See an authorized dealer.

7. Electronic Throttle Control (ETC) Light

This light will turn on briefly as a bulb check when the ignition switch is turned ON. This light will also turn on while the engine is running if there is a problem with the Electronic Throttle Control (ETC) system.

If the light comes on while the engine is running, safely bring the vehicle to a complete stop as soon as possible, place the shift lever in PARK, and cycle the ignition key. The light should turn off. If the light remains lit with the engine running, your vehicle will usually be drivable. However, see an authorized dealer for service as soon as possible.

If the light is flashing when the engine is running, immediate service is required. In this case, you may experience reduced performance, an elevated/rough idle or engine stall, and your vehicle may require towing.

Also, have the system checked by an authorized dealer if the light does not come on during starting.

8. Temperature Gauge

The temperature gauge shows engine coolant temperature. Any reading within the normal range indicates that the engine cooling system is operating satisfactorily.

The gauge pointer will likely indicate a higher temperature when driving in hot weather, up mountain grades, or when towing a trailer. It should not be allowed to exceed the upper limits of the normal operating range.

CAUTION!

Driving with a hot engine cooling system could damage your vehicle. If the temperature gauge reads "H," pull over and stop the vehicle. Idle the vehicle with the air conditioner turned off until the pointer drops back into the normal range. If the pointer remains on the "H," and you hear a chime, turn the engine OFF immediately and call for service.

WARNING!

A hot engine cooling system is dangerous. You or others could be badly burned by steam or boiling coolant. You may want to call a service center if your vehicle overheats. If you decide to look under the hood yourself, refer to Section 7 and follow the warnings under the Cooling System Pressure Cap paragraph.

9. Turn Signal Indicators

⇦ The arrow will flash with the exterior turn signal when the turn signal lever is operated.

NOTE:

- A continuous chime will sound if the vehicle is driven more than 1 mile (1.6 km) with either turn signal on.
- Check for an inoperative outside light bulb if either indicator flashes at a rapid rate.

10. Airbag Warning Light

This light will turn on for six to eight seconds as a bulb check when the ignition switch is first turned ON. If the light is either not on during starting, or stays on, or turns on while driving, then have the system inspected at an authorized dealer as soon as possible.

11. Engine Temperature Warning Light

This light will turn on and a single chime will sound to warn of an overheated engine condition. When this light turns on, the engine temperature is critically hot. If the light turns on while driving, safely pull over and stop the vehicle. The vehicle should be turned OFF immediately and serviced as soon as possible. (Refer to "If Your Engine Overheats" in Section 6 for more information).

12. Electronic Stability Program (ESP)/Traction Control System (TCS) Indicator Light — If Equipped

If this indicator light flashes during acceleration, ease up on the accelerator and apply as little throttle as possible. Adapt your speed and driving to the prevailing road conditions, and do not switch off the Electronic Stability Program (ESP).

13. Electronic Stability Program (ESP) / Brake Assist System (BAS) Malfunction Indicator Light — If Equipped

The yellow Electronic Stability Program (ESP) / Brake Assist System (BAS) Malfunction Indicator Light will turn on when the key in the ignition switch is turned to the ON position. The light should go out with the engine running. The system will turn this light on continuously while the engine is running if it detects a malfunction in either the ESP or the BAS or both.

14. Oil Pressure Warning Light

This light indicates low engine oil pressure. The light should turn on momentarily when the engine is started. If the light turns on while driving, stop the vehicle, and shut OFF the engine as soon as possible. A single chime will sound when this light turns on.

Do not operate the vehicle until the cause is corrected. This light does not show how much oil is in the engine. The engine oil level must be checked using the procedure shown in Section 7.

15. High Beam Light

This light will turn on when the high beam headlights are ON. Push the multifunction lever away from the steering wheel to switch the headlights to high beam.

16. Seat Belt Reminder Light

This light will turn on for five to eight seconds as a bulb check when the ignition switch is first turned ON. A chime will sound if the driver's seat belt is unbuckled during the bulb check. The Seat Belt Reminder Light will flash or remain on continuously if the driver's seat belt remains unbuckled after the bulb check or when driving.

17. Shift Lever Indicator

This indicator shows the automatic transmission shift lever selection.

18. Front Fog Light Indicator — If Equipped

This light will turn on when the front fog lights are ON.

19. Odometer/Trip Odometer Display / Electronic Vehicle Information Center (EVIC) Display — If Equipped

The odometer shows the total distance the vehicle has been driven. The trip odometer shows individual trip mileage. Refer to "Trip Odometer Button" for additional information.

NOTE: U.S. Federal regulations require upon transfer of vehicle ownership, the seller certify the mileage the vehicle has been driven. Therefore, if the odometer reading is changed because of repair or replacement, be sure to keep a record of the reading before and after the service so that the correct mileage can be determined.

Rear Wheel Drive (RWD) / All Wheel Drive (AWD) Displays (Base Cluster)

On vehicles equipped with a Base Instrument Cluster, the odometer will display "2drivE" when the vehicle is in Rear Wheel Drive (RWD), and "4drivE" when All Wheel Drive (AWD) is activated.

If the odometer displays the "tCASE" warning message after engine start up, or during driving, the AWD system is not functioning properly and service is required.

NOTE: Vehicles equipped with Electronic Vehicle Information Center (EVIC) will display SERVICE AWD SYSTEM if the system is not functioning properly and service is required. Refer to Electronic Vehicle Information Center (EVIC) in this section for more information.

Change Oil Message (Base Cluster)

Your vehicle is equipped with an engine oil change indicator system. The "Change Oil" message will flash in the instrument cluster odometer for approximately 12 seconds after a single chime has sounded to indicate the next scheduled oil change interval. The engine oil change indicator system is duty cycle based, which means the engine oil change interval may fluctuate dependent upon your personal driving style.

Unless reset, this message will continue to display each time you turn the ignition switch to the ON position. To turn off the message temporarily, press and release the TRIP ODOMETER button on the instrument cluster. To reset the oil change indicator system (after performing the scheduled maintenance) perform the following procedure:

1. Turn the ignition switch to the ON position. (Do not start the engine).
2. Fully depress the accelerator pedal slowly three times within 10 seconds.
3. Turn the ignition switch to the LOCK position.

NOTE: If the indicator message illuminates when you start the vehicle, the oil change indicator system did not reset. If necessary, repeat this procedure.

On vehicles equipped with a Premium Instrument Cluster, this display shows the Electronic Vehicle Information Center (EVIC) messages when the appropriate conditions exist.

Lo tirE

When the appropriate condition exists the odometer display will toggle between Lo and tirE for three cycles.

Loose Fuel Filler Cap Message

If the vehicle diagnostic system determines that the fuel filler cap is loose, improperly installed, or damaged, a "Check Gascap" message will display in the EVIC. Tighten the fuel filler cap properly and press the TRIP ODOMETER button to turn off the message. If the problem continues, the message will appear the next time the vehicle is started.

A loose, improperly installed, or damaged fuel filler cap may also turn on the Malfunction Indicator Light (MIL).

Refer to "Electronic Vehicle Information Center (EVIC)" in this section for more information.

20. Brake Warning Light

BRAKE

This light monitors various brake functions, including brake fluid level and parking brake application. If the brake light turns on, it may indicate that the parking brake is applied, that the brake fluid level is low, or that there is a problem with the anti-lock brake system reservoir.

If the light remains on when the parking brake has been disengaged, and the fluid level is at the full mark on the master cylinder reservoir, it indicates a possible brake hydraulic system malfunction or a problem with the Brake Booster has been detected by the Anti-Lock Brake System (ABS) / Electronic Stability Program (ESP) system. In this case, the light will remain on until the condition has been corrected. If the problem is related to the brake booster, the ABS pump will run when applying the brake and a brake pedal pulsation may be felt during each stop.

The dual brake system provides a reserve braking capacity in the event of a failure to a portion of the hydraulic system. A leak in either half of the dual brake system is indicated by the Brake Warning Light which will turn on when the brake fluid level in the master cylinder has dropped below a specified level.

The light will remain on until the cause is corrected.

NOTE: The light may flash momentarily during sharp cornering maneuvers which change fluid level conditions. The vehicle should have service performed, and the brake fluid level checked.

If brake failure is indicated, immediate repair is necessary.

WARNING!

Driving a vehicle with the brake light on is dangerous. Part of the brake system may have failed. It will take longer to stop the vehicle. You could have an accident. Have the vehicle checked immediately.

Vehicles equipped with the Anti-Lock Brake System (ABS), are also equipped with Electronic Brake Force Distribution (EBD). In the event of an EBD failure, the Brake Warning Light will turn on along with the ABS Light. Immediate repair to the ABS system is required.

Operation of the Brake Warning Light can be checked by turning the ignition switch from the OFF position to the ON position. The light should illuminate for approximately two seconds. The light should then turn off unless the parking brake is applied or a brake fault is detected. If the light does not illuminate, have the light inspected by an authorized dealer.

The light also will turn on when the parking brake is applied with the ignition switch in the ON position.

NOTE: This light shows only that the parking brake is applied. It does not show the degree of brake application.

21. Vehicle Security Light — If Equipped

The Vehicle Security Light flashes rapidly when the Vehicle Security Alarm is arming, and slowly when the Vehicle Security Alarm is armed.

22. Tire Pressure Monitoring Telltale Light

Each tire, including the spare (if provided), should be checked monthly, when cold and inflated to the inflation pressure recommended by the vehicle manufacturer on the vehicle placard or tire inflation pressure label. (If your vehicle has tires of a different size than the size indicated on the vehicle placard or tire inflation pressure label, you should determine the proper tire inflation pressure for those tires.)

As an added safety feature, your vehicle has been equipped with a Tire Pressure Monitoring System (TPMS) that illuminates a low tire pressure telltale when one or more of your tires is significantly under-inflated. Accordingly, when the low tire pressure telltale illuminates, you should stop and check your tires as soon as possible, and inflate them to the proper pressure. Driving on a significantly under-inflated tire causes the tire to overheat and can lead to tire failure. Under-inflation also reduces fuel efficiency and tire tread life, and may affect the vehicle's handling and stopping ability.

Please note that the TPMS is not a substitute for proper tire maintenance, and it is the driver's responsibility to maintain correct tire pressure, even if under-inflation has not reached the level to trigger illumination of the TPMS low tire pressure telltale.

Your vehicle has also been equipped with a TPMS malfunction indicator to indicate when the system is not operating properly. The TPMS malfunction indicator is combined with the low tire pressure telltale. When the system detects a malfunction, the telltale will flash for approximately one minute and then remain continuously illuminated. This sequence will continue upon subsequent vehicle start-ups as long as the malfunction exists. When the malfunction indicator is illuminated, the system may not be able to detect or signal low tire pressure as intended. TPMS malfunctions may occur for a variety of reasons, including the installation of replacement or alternate tires or wheels on the vehicle that prevent the TPMS from functioning properly. Always check the TPMS malfunction telltale after replacing one or more tires or wheels on your vehicle, to ensure that the replacement or alternate tires and wheels allow the TPMS to continue to function properly.

CAUTION!

The TPMS has been optimized for the original equipment tires and wheels. TPMS pressures and warning have been established for the tire size equipped on your vehicle. Undesirable system operation or sensor damage may result when using replacement equipment that is not of the same size, type, and/or style. Aftermarket wheels can cause sensor damage. Do not use tire sealant from a can, or balance beads if your vehicle is equipped with a TPMS, as damage to the sensors may result.

23. Anti-Lock Brake (ABS) Light — If Equipped

This light monitors the Anti-Lock Brake System (ABS). The light will turn on when the ignition switch is turned to the ON position and may stay on for as long as four seconds.

If the ABS light remains on or turns on while driving, then the Anti-Lock portion of the brake system is not functioning and service is required. However, the conventional brake system will continue to operate normally if the BRAKE warning light is not on.

If the ABS light is on, the brake system should be serviced as soon as possible to restore the benefits of Anti-Lock brakes. If the ABS light does not turn on when the ignition switch is turned to the ON position, have the light inspected by an authorized dealer.

24. Low Fuel Indicator Light

This light will turn on and a single chime will sound when the fuel level drops to 1/8 tank.

25. Malfunction Indicator Light (MIL)

The Malfunction Indicator Light (MIL) is part of an onboard diagnostic system called OBD. The OBD system monitors engine and automatic transmission control systems. The MIL will turn on when the key is in the ON position before engine start. If the MIL does not come on when turning the key from LOCK to ON, have the condition checked promptly.

Certain conditions such as a loose or missing gas cap, poor fuel quality, etc., may illuminate the MIL after engine start. The vehicle should be serviced if the MIL stays on through several of your typical driving cycles. In most situations, the vehicle will drive normally and will not require towing.

The MIL flashes to alert you to serious conditions that could lead to immediate loss of power or severe catalytic converter damage. The vehicle should be serviced as soon as possible if this occurs.

ELECTRONIC VEHICLE INFORMATION CENTER (EVIC) – IF EQUIPPED

The Electronic Vehicle Information Center (EVIC) features a driver-interactive display that is located in the instrument cluster.

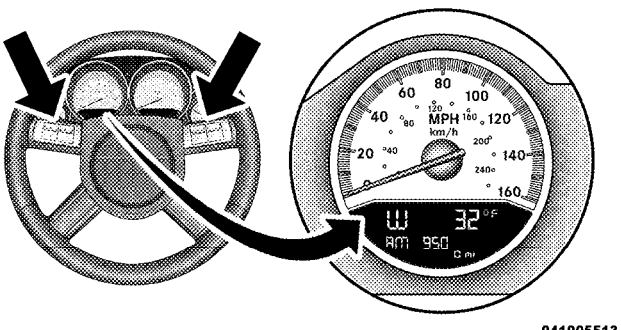

Electronic Vehicle Information Center (EVIC)

This system allows the driver to select a variety of useful information by pressing the switches mounted on the steering wheel. The EVIC consists of the following:

- System status
- Vehicle information warning message displays
- Personal settings (customer programmable features)
- Compass display
- Outside temperature display
- Trip computer functions
- uconnect® phone displays (if equipped)
- uconnect® gps system screens (if equipped)
- Audio mode display
- Surround Sound Modes (If Equipped with Driver-Selectable Surround [DSS])

The system allows the driver to select information by pressing the following buttons mounted on the steering wheel.

MENU Button

Press and release the MENU button and the mode displayed will change between Trip Functions, uconnect® gps (if equipped), System Status, and Personal Settings.

FUNC-TION SELECT Button

Press the FUNCTION SELECT button to accept a selection. The FUNCTION SELECT button also functions as a remote sound system control. Refer to “Remote Sound System Controls” in this section.

SCROLL Button

Press the SCROLL button to scroll through Trip Functions, Navigation (if equipped), System Status Messages, and Personal Settings (Customer-Programmable Features). The SCROLL button also functions as a remote sound system control. Refer to "Remote Sound System Controls" in this section.

AUDIO MODE Button

Press the AUDIO MODE button to select the Compass/Temp/Audio screen. Along with compass reading and outside temperature, this screen will display radio and media mode information depending on which radio is in the vehicle. Refer to "Remote Sound System Controls" in this section.

Electronic Vehicle Information Center (EVIC) Displays

When the appropriate conditions exist, the EVIC displays the following messages:

- Turn Signal On (with a continuous warning chime if the vehicle is driven more than 1 mile [1.6 km] with either turn signal on)
- Left Front Turn Signal Light Out (with a single chime)
- Left Rear Turn Signal Light Out (with a single chime)
- Right Front Turn Signal Light Out (with a single chime)
- Right Rear Turn Signal Light Out (with a single chime)
- RKE Battery Low (with a single chime)
- Personal Settings Not Available – Vehicle Not in PARK

- Left/Right Front Door Ajar (one or more, with a single chime if speed is above 1 mph [1.6 km/h])
- Left/Right Rear Door Ajar (one or more, with a single chime if speed is above 1 mph [1.6 km/h])
- Door(s) Ajar (with a single chime if vehicle is in motion)
- Trunk Ajar (with a single chime)
- Low Washer Fluid (with a single chime)
- Low Tire Pressure
- SERVICE AWD SYSTEM — All Wheel Drive (AWD) system is not functioning properly and service is required.
- Channel # Transmit
- Channel # Training
- Channel # Trained
- Clearing Channels
- Channels Cleared
- Did Not Train
- Insert Key/Turn To Run (refer to "Remote Starting System" in Section 2)
- Check Gascap (refer to "Adding Fuel" in Section 5)
- Oil Change Required (with a single chime)

Oil Change Required

Your vehicle is equipped with an engine oil change indicator system. The "Oil Change Required" message will flash in the EVIC display for approximately 10 seconds after a single chime has sounded to indicate the next scheduled oil change interval. The engine oil change indicator system is duty cycle based, which means the engine oil change interval may fluctuate dependent upon your personal driving style.

Unless reset, this message will continue to display each time you turn the ignition switch to the ON position. To turn off the message temporarily, press and release the MENU button. To reset the oil change indicator system (after performing the scheduled maintenance) perform the following procedure:

1. Turn the ignition switch to the ON position. (Do not start the engine).

2. Fully depress the accelerator pedal slowly three times within 10 seconds.

3. Turn the ignition switch to the LOCK position.

NOTE: If the indicator message illuminates when you start the vehicle, the oil change indicator system did not reset. If necessary, repeat this procedure.

Trip Functions

Press and release the MENU button until one of the following Trip Functions displays in the EVIC:

- Average Fuel Economy
- Distance To Empty
- Trip A
- Trip B
- Elapsed Time
- Display Units of Measure in

Press the SCROLL button to cycle through all the Trip Computer functions.

The Trip Functions mode displays the following.

- ***Average Fuel Economy***

Shows the average fuel economy since the last reset. When the fuel economy is reset, the display will read "RESET" or show dashes for two seconds. Then, the history information will be erased, and the averaging will continue from the last fuel average reading before the reset.

- ***Distance To Empty (DTE)***

Shows the estimated distance that can be traveled with the fuel remaining in the tank. This estimated distance is determined by a weighted average of the instantaneous and average fuel economy, according to the current fuel tank level. DTE cannot be reset through the FUNCTION SELECT button.

NOTE: Significant changes in driving style or vehicle loading will greatly affect the actual drivable distance of the vehicle, regardless of the DTE displayed value.

When the DTE value is less than 30 miles (48 km) estimated driving distance, the DTE display will change to a text display of "LOW FUEL." This display will continue until the vehicle runs out of fuel. Adding a significant amount of fuel to the vehicle will turn off the "LOW FUEL" text and a new DTE value will display.

- ***Trip A***

Shows the total distance traveled for Trip A since the last reset.

- ***Trip B***

Shows the total distance traveled for Trip B since the last reset.

- ***Elapsed Time***

Shows the total elapsed time of travel since the last reset when the ignition switch is in the ACC position. Elapsed time will increment when the ignition switch is in the ON or START position.

- *Display Units of Measure in*

To make your selection, press and release the FUNCTION SELECT button until “US” or “METRIC” appears.

To Reset The Display

Reset will only occur while a resettable function is being displayed. Press and release the FUNCTION SELECT button once to clear the resettable function being displayed. To reset all resettable functions, press and release the FUNCTION SELECT button a second time within three seconds of resetting the currently-displayed function. (>Reset ALL will display during this three-second window.)

Automatic All Wheel Drive (AWD) Displays — If Equipped

Automatic AWD operation could be activated by outside temperature, wheel slip, or other predetermined conditions, when the vehicle automatically transitions from RWD to AWD the EVIC will display the following message for five seconds.

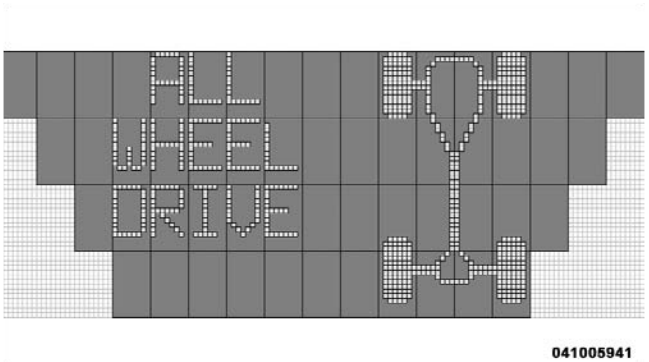

Rear Wheel Drive (RWD) to All Wheel Drive (AWD)

When the vehicle automatically transitions from AWD to RWD the EVIC will display the following message for five seconds.

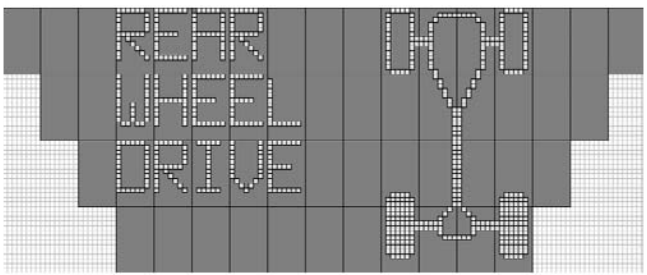

041005942

All Wheel Drive (AWD) to Rear Wheel Drive (RWD)

Refer to "All Wheel Drive — If Equipped" in Section 5 for more information on the All Wheel Drive (AWD) system.

Compass Display

COM-PASS Button

The compass readings indicate the direction the vehicle is facing. Press and release the COMPASS button to display one of eight compass readings and the outside temperature.

Automatic Compass Calibration

This compass is self-calibrating, which eliminates the need to set the compass manually. When the vehicle is new, the compass may appear erratic and the EVIC will display "CAL" until the compass is calibrated. You may also calibrate the compass by completing one or more 360 degree turns (in an area free from large metal or metallic objects) until the "CAL" message displayed in the EVIC turns off. The compass will now function normally.

Manual Compass Calibration

If the compass appears erratic and the "CAL" message does not appear in the EVIC display, you must put the compass into the Calibration Mode manually as follows:

1. Turn the ignition switch ON.

2. Press and hold the COMPASS button for approximately two seconds.

3. Press the SCROLL button until "Calibrate Compass" displays in the EVIC.

4. Press and release the FUNCTION SELECT button to start the calibration. The message "CAL" will display in the EVIC.

5. Complete one or more 360 degree turns (in an area free from large metal or metallic objects) until the "CAL" message turns off. The compass will now function normally.

Compass Variance

Compass Variance is the difference between Magnetic North and Geographic North. To compensate for the differences, the variance should be set for the zone where the vehicle is driven, per the zone map. Once properly set, the compass will automatically compensate for the differences and provide the most accurate compass heading.

NOTE: Keep magnetic materials away from the top of the instrument panel, such as iPod's, Cell Phones, Laptops and Radar Detectors. This is where the compass module is located, and it can cause interference with the compass sensor, and it may give false readings.

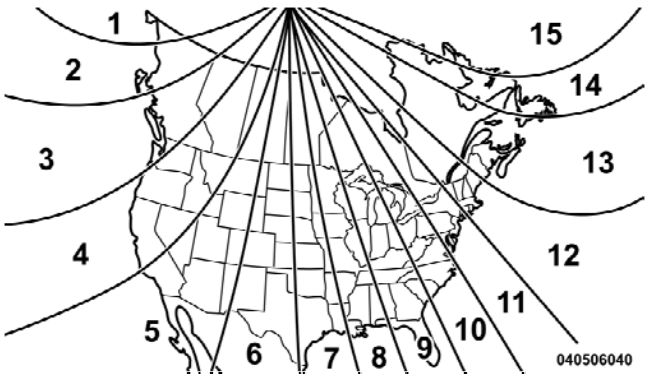

1. Turn the ignition switch ON.

2. Press and hold the COMPASS button for approximately two seconds.

3. Press the SCROLL button until "Compass Variance" message and the last variance zone number displays in the EVIC.

4. Press and release FUNCTION SELECT button until the proper variance zone is selected according to the map.

5. Press and release the COMPASS button to exit.

Driver-Selectable Surround Sound (DSS) – If Equipped

Press and release the MENU button until "Surround Sound" displays in the EVIC. The EVIC provides information on the current surround mode.

- Stereo
- Audio Surround

While in the Surround Sound menu, press the FUNCTION SELECT button to change surround modes.

uconnect® gps (Navigation) — If Equipped

uconnect® gps (Navigation) Display Control

Press and release the MENU button until Navigation displays in the EVIC. When the Navigation System is On, the steering wheel buttons can be used to select the Map or Menu display on the Navigation Unit. When the Menu display is active, the SCROLL button can be used to scroll through the list, the FUNCTION SELECT button can be used to select an item, and the AUDIO MODE button can be used to return to the previous menu. When the Map display is active, pressing the FUNCTION SELECT button will change the Navigation Unit Display to the Menu.

Turn-by-Turn Directions

The EVIC displays turn-by-turn directions to a programmed destination when Turn-by-Turn Navigation is enabled through Personal Settings. When enabled, the EVIC displays the name of the approaching road at the top of the screen, followed by an arrow to indicate the direction to turn the vehicle, and a count down to indicate the distance to the turn.

NOTE: Refer to your "Navigation User's Manual" for detailed operating instructions.

Personal Settings (Customer-Programmable Features)

Personal Settings allows the driver to set and recall features when the transmission is in PARK.

Press and release the MENU button until Personal Settings displays in the EVIC.

Use the SCROLL button to display one of the following choices.

"Language"
When in this display you may select one of five languages for all display nomenclature, including the trip functions and the navigation system (if equipped). Press the FUNCTION SELECT button while in this display to select English, Espanol, Deutsch, Italiano, or Francais. Then, as you continue, the information will display in the selected language.

NOTE: The EVIC will not change the uconnect® language selection. Refer to "Language Selection" under "uconnect® phone" in Section 3.

"Lock Doors Automatically at 15 mph (24 km/h)"
When ON is selected, all doors will lock automatically when the vehicle reaches a speed of 15 mph (24 km/h). To make your selection, press and release the FUNCTION SELECT button until "ON" or "OFF" appears.

"Unlock Doors Automatically on Exit"
When ON is selected, all doors will unlock when the vehicle is stopped and the transmission is in the PARK or NEUTRAL position and the driver's door is opened. To make your selection, press and release the FUNCTION SELECT button until "ON" or "OFF" appears.

"Remote Key Unlock"
When **Driver Door 1st Press** is selected, only the driver's door will unlock on the first press of the Remote Keyless Entry (RKE) transmitter UNLOCK button. When Driver Door 1st Press is selected, you must press the RKE transmitter UNLOCK button twice to unlock the passenger's doors. When **All Doors 1st Press** is selected, all of the doors will unlock on the first press of the RKE transmitter UNLOCK button. To make your selection, press and release the FUNCTION SELECT button until "Driver Door 1st Press" or "All Doors 1st Press" appears.

"Sound Horn with Remote Key Lock"
When ON is selected, a short horn sound will occur when the RKE transmitter LOCK button is pressed. This feature may be selected with or without the flash lights on lock/unlock feature. To make your selection, press and release the FUNCTION SELECT button until "ON" or "OFF" appears.

"Flash Lights with Remote Key Lock"
When ON is selected, the front and rear turn signals will flash when the doors are locked or unlocked with the RKE transmitter. This feature may be selected with or without the sound horn on lock feature selected. To make your selection, press and release the FUNCTION SELECT button until "ON" or "OFF" appears.

"Headlights On with Wipers" (Available with Auto Headlights Only)
When ON is selected, and the HEADLIGHT switch is in the AUTO position, the headlights will turn on approximately 10 seconds after the wipers are turned on. The headlights will also turn off when the wipers are turned off if they were turned on by this feature. To make your selection, press and release the FUNCTION SELECT button until "ON" or "OFF" appears.

NOTE: Turning the headlights on during the daytime causes the instrument panel lights to dim. To increase the brightness, refer to "Lights" in Section 3.

"Delay Turning Headlights Off"
When this feature is selected, the driver can choose to have the headlights remain on for 0, 30, 60, or 90 seconds when exiting the vehicle. To make your selection, press and release the FUNCTION SELECT button until "0," "30," "60," or "90" appears.

"Turn Headlights On with Remote Key Unlock"
When this feature is selected, the headlights will activate and remain on for up to 90 seconds when the doors are unlocked with the RKE transmitter. To make your selection, press and release the FUNCTION SELECT button until "OFF," "30 sec.," "60 sec.," or "90 sec." appears.

"Delay Power Off to Accessories Until Exit"
When this feature is selected, the power WINDOW switches, radio, uconnect® phone (if equipped), DVD video system (if equipped), power sunroof (if equipped), and power outlets will remain active for up to 60 minutes after the ignition switch is turned OFF. Opening a vehicle door will cancel this feature. To make your selection, press and release the FUNCTION SELECT button until "Off," "45 sec.," "5 min.," "10 min.," "30 min.," or "60 min." appears.

"AWD System Displays"
When in this display you may select "ON" or "OFF". When ON is selected, the EVIC displays the current mode of the transfer-case. A five second display appears any time the transfer-case changes from All Wheel Drive (AWD) to Rear Wheel Drive (RWD) or from RWD to AWD. The EVIC also displays the current mode of the transfer-case when you shift into drive or reverse. To make your selection, press and release the FUNCTION SELECT button until "ON" or "OFF" appears.

"Confirmation of Voice Commands" — If Equipped
When ON is selected, all voice commands from the uconnect® system are confirmed. To make your selection, press and release the FUNCTION SELECT button until "ON" or "OFF" appears.

"Turn-by-Turn Navigation" — If Equipped
When ON is selected, the turn-by-turn directions will appear in the display as the vehicle approaches a designated turn within a programmed route. To make your selection, press and release the FUNCTION SELECT button until "ON" or "OFF" appears.

"Display Units of Measure in"
The EVIC, odometer, and uconnect® gps system (if equipped) can be changed between English and Metric units of measure. To make your selection, press and release the FUNCTION SELECT button until "US" or "METRIC" appears.

SALES CODE REQ — AM/FM STEREO RADIO AND 6–DISC CD/DVD CHANGER (MP3/WMA AUX JACK)

NOTE: The radio sales code is located on the lower right side of the radio faceplate.

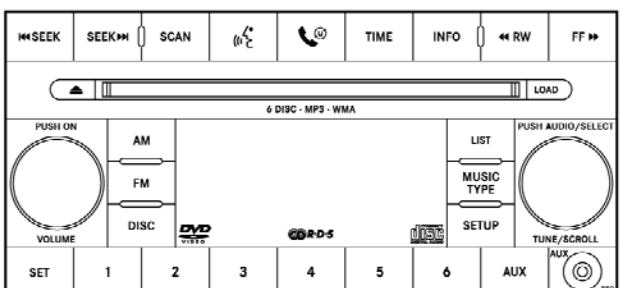

REQ Radio

Operating Instructions - Radio Mode

NOTE: The ignition switch must be in the ON or ACC position to operate the radio.

Power Switch/Volume Control (Rotary)
Push the ON/VOLUME control knob to turn on the radio. Press the ON/VOLUME control knob a second time to turn off the radio.

Electronic Volume Control
The electronic volume control turns continuously (360 degrees) in either direction without stopping. Turning the ON/VOLUME control knob to the right increases the volume and to the left decreases it.

When the audio system is turned ON, the sound will be set at the same volume level as last played.

SEEK Buttons
Press and release the SEEK buttons to search for the next listenable station in AM/FM mode. Press the right switch to seek up and the left switch to seek down. The radio will remain tuned to the new station until you make another selection. Holding either button will bypass stations without stopping until you release it.

SCAN Button
Pressing the SCAN button causes the tuner to search for the next listenable station in AM, FM or Satellite (if equipped) frequencies, pausing for five seconds at each listenable station before continuing to the next. To stop the search, press the SCAN button a second time.

Voice Recognition Button uconnect® phone — If Equipped
Press this button to operate the uconnect® phone feature (if equipped). Refer to “uconnect® phone” in Section 3.

If your vehicle is not equipped with or this feature is not available on your vehicle, a “Not Equipped With uconnect” message will display on the radio screen.

Phone Button uconnect® phone — If Equipped
Press this button to operate the uconnect® phone feature (if equipped). Refer to "uconnect® phone" in Section 3.

If your vehicle is not equipped with or this feature is not available on your vehicle, a "Not Equipped With uconnect" message will display on the radio screen.

TIME Button
Press the TIME button to alternate locations of the time and frequency display.

Clock Setting Procedure

1. Press and hold the TIME button until the hours blink.

2. Adjust the hours by turning the right side TUNE/SCROLL control knob.

3. After adjusting the hours, press the right side TUNE/SCROLL control knob to set the minutes. The minutes will begin to blink.

4. Adjust the minutes using the right side TUNE/SCROLL control knob. Press the TUNE/SCROLL control knob to save the time change.

5. To exit, press any button/knob or wait five seconds.

The clock can also be set by pressing the SETUP button and selecting the "SET HOME CLOCK" entry. Once in this display follow the above procedure, starting at step 2.

INFO Button
Press the INFO button for an RDS station (one with call letters displayed). The radio will return a Radio Text message broadcast from an FM station (FM mode only).

RW/FF
Pressing the RW (Rewind) or FF (Fast Forward) buttons causes the tuner to search for the next frequency in the direction of the arrows. This feature operates in AM, FM or Satellite (if equipped) frequencies.

TUNE Control
Turn the rotary TUNE/SCROLL control knob clockwise to increase or counterclockwise to decrease the frequency.

Setting the Tone, Balance, and Fade
Push the rotary TUNE/SCROLL control knob and BASS will display. Turn the TUNE/SCROLL control knob to the right or left to increase or decrease the bass tones.

Push the rotary TUNE/SCROLL control knob a second time and MID will display. Turn the TUNE/SCROLL control knob to the right or left to increase or decrease the mid-range tones.

Push the rotary TUNE/SCROLL control knob a third time and TREBLE will display. Turn the TUNE/SCROLL control knob to the right or left to increase or decrease the treble tones.

Push the rotary TUNE/SCROLL control knob a fourth time and BALANCE will display. Turn the TUNE/SCROLL control knob to the right or left to adjust the sound level from the right or left side speakers.

Push the rotary TUNE/SCROLL control knob a fifth time and FADE will display. Turn the TUNE/SCROLL control knob to the left or right to adjust the sound level between the front and rear speakers.

Push the rotary TUNE/SCROLL control knob again to exit setting tone, balance, and fade.

MUSIC TYPE Button
Pressing this button once will turn on the Music Type mode for five seconds. Pressing the MUSIC TYPE button or turning the TUNE/SCROLL control knob within five seconds will allow the program format type to be selected. Many radio stations do not currently broadcast Music Type information.

Toggle the MUSIC TYPE button to select the following format types:

Program Type	16-Digit Character Display
No program type or undefined	None
Adult Hits	Adlt Hit
Classical	Classicl
Classic Rock	Cls Rock
College	College
Country	Country
Foreign Language	Language
Information	Inform
Jazz	Jazz
News	News
Nostalgia	Nostalga
Oldies	Oldies
Personality	Persnlty
Public	Public
Rhythm and Blues	R & B
Religious Music	Rel Musc
Religious Talk	Rel Talk
Rock	Rock
Soft	Soft
Soft Rock	Soft Rck
Soft Rhythm and Blues	Soft R & B
Sports	Sports
Talk	Talk
Top 40	Top 40
Weather	Weather

By pressing the SEEK button when the Music Type icon is displayed, the radio will be tuned to the next frequency station with the same selected Music Type name. The Music Type function only operates when in the FM mode.

If a preset button is activated while in the Music Type (Program Type) mode, the Music Type mode will be exited and the radio will tune to the preset station.

SETUP Button
Pressing the SETUP button allows you to select between the following items:

NOTE: Turn the TUNE/SCROLL control knob to scroll through the entries. Push the AUDIO/SELECT button to select an entry and make changes.

- **DVD Enter -** When the disc is in DVD Menu mode, selecting DVD Enter will allow you to play the current highlighted selection. Use the remote control to scroll up and down the menu (if equipped).

- **DISC Play/Pause -** You can toggle between playing the DVD and pausing the DVD by pushing the SELECT button (if equipped).

- **DVD Play Options -** Selecting the DVD Play Options will display the following:
  - Subtitle – Repeatedly pressing SELECT will switch subtitles to different subtitle languages that are available on the disc (if equipped).
  - Audio Stream – Repeatedly pressing SELECT will switch to different audio languages (if supported on the disc) (if equipped).

- Angle – Repeatedly pressing SELECT will change the viewing angle if supported by the DVD disc (if equipped).

NOTE:

- The available selections for each of the above entries varies depending upon the disc.
- These selections can only be made while playing a DVD.
- **VES™ Power -** Allows you to turn VES™ ON and OFF (if equipped).
- **VES™ Lock -** Locks out rear VES™ remote controls (if equipped).
- **VES™ CH1/CH2 -** Allows the user to change the mode of either the IR1 or IR2 wireless headphones by pressing the AUDIO/SELECT button (if equipped).
- **Set Home Clock -** Pressing the SELECT button allows you to set the clock. Turn the TUNE/SCROLL control knob to adjust the hours and then press and turn the TUNE/SCROLL control knob to adjust the minutes. Press the TUNE/SCROLL control knob again to save changes.
- **Player Defaults -** Selecting this item will allow the user to scroll through the following items and set defaults according to customer preference.

Menu Language — If Equipped

Selecting this item will allow the user to choose the default startup DVD menu language (effective only if language supported by disc). If you want to select a language not listed, then scroll down and select "other." Enter the four-digit country code using the TUNE/SCROLL control knob to scroll up and down to select the number and then push to select.

Audio Language — If Equipped
Selecting this item allows you to choose a default audio language (effective only if the language is supported by the disc). You can select a language not listed by scrolling down and selecting "other." Enter the country code using the TUNE/SCROLL control knob to scroll up and down to select the number and then push to select.

Subtitle Language — If Equipped
Selecting this item allows you to choose a default subtitle language (effective only if the language is supported by the disc). You can select a language not listed by scrolling down and selecting "other." Enter the country code using the TUNE/SCROLL control knob to scroll up and down to select the number and then push to select.

Subtitles — If Equipped
Selecting this item allows you to choose between subtitle Off or On.

Audio DRC — If Equipped
Selecting this item allows you to limit maximum audio dynamic range. The default is set to "High," and under this setting, dialogues will play at 11 db higher than if the setting is "Normal."

Aspect Ratio — If Equipped
Selecting this item allows you to choose between wide screen, pan scan, and letter box.

AutoPlay — If Equipped
When this is set to On and a DVD video is inserted, it will bypass the DVD menu screen and automatically play the movie. In some rare cases, the DVD player may not auto-play the main title. In such cases, use the MENU button on the remote control to select desired title to play.

NOTE: The user will have to set these defaults before loading a disc. If changes are made to these settings after

a disc is loaded, changes will not be effective. Also, the defaults are effective only if the disc supports the customer-preferred settings.

AM and FM Buttons
Press the buttons to select AM or FM mode.

SET Button — To Set the Pushbutton Memory
When you are receiving a station that you wish to commit to pushbutton memory, press the SET button. The symbol SET 1 will now show in the display window. Select the button (1-6) you wish to lock onto this station and press and release that button. If a button is not selected within five seconds after pressing the SET button, the station will continue to play but will not be stored into pushbutton memory.

You may add a second station to each pushbutton by repeating the above procedure with this exception: Press the SET button twice and SET 2 will show in the display window. Each button can be set for SET 1 and SET 2 in both AM and FM. This allows a total of 12 AM, 12 FM, and 12 Satellite (if equipped) stations to be stored into pushbutton memory. The stations stored in SET 2 memory can be selected by pressing the pushbutton twice.

Every time a preset button is used, a corresponding button number will display.

Buttons 1 - 6
These buttons tune the radio to the stations that you commit to pushbutton memory {12 AM, 12 FM, and 12 Satellite (if equipped) stations}.

DISC Button
Pressing the DISC button will allow you to switch from AM/FM modes to Disc modes.

Operation Instructions - (DISC MODE for CD and MP3/WMA Audio Play, DVD-VIDEO)

The radio DVD player and many DVD discs are coded by geographic region. These region codes must match in order for the disc to play. If the region code for the DVD disc does not match the region code for the radio DVD player, it will not play the disc. Customers may take their vehicle to an authorized dealer to change the region code of the player a maximum of five times.

CAUTION!

The radio may shut down during extremely hot conditions. When this occurs, the radio will indicate "Disc Hot" and shut off until a safe temperature is reached. This shutdown is necessary to protect the optics of the DVD player and other radio internal components.

NOTE: The ignition switch must be in the ON or ACC position to operate the radio.

LOAD Button — Loading Compact Disc(s)

Press the LOAD button and the pushbutton with the corresponding number (1-6) where the CD is being loaded. The radio will display PLEASE WAIT and prompt when to INSERT DISC. After the radio displays "INSERT DISC," insert the CD into the player.

Radio display will show "LOADING DISC" when the disc is loading and "READING DISC" when the radio is reading the disc.

CAUTION!

This CD player will accept 4–3/4 in (12 cm) discs only. The use of other sized discs may damage the CD player mechanism.

Eject Button — Ejecting Compact Disc(s)

Press the EJECT button and the pushbutton with the corresponding number (1-6) where the CD was loaded and the disc will unload and move to the entrance for easy removal. Radio display will show "EJECTING DISC" when the disc is being ejected and prompt the user to remove the disc.

Press and hold the EJECT button for five seconds and all CDs will be ejected from the radio.

The disc can be ejected with the radio and ignition OFF.

SEEK Button (CD MODE)

Press the right SEEK button for the next selection on the CD. Press the left SEEK button to return to the beginning of the current selection, or return to the beginning of the previous selection if the CD is within the first second of the current selection. Pressing and holding the SEEK button will allow you to scroll through the tracks faster in CD and MP3/MWA modes.

SCAN Button (CD MODE)

Press the SCAN button to scan through each track on the CD currently playing.

TIME Button (CD MODE)

Press this button to change the display from a large CD playing time display to a small CD playing time display.

RW/FF (CD MODE)

Press and hold FF (Fast Forward) and the CD player will begin to fast forward until FF is released, or RW or another CD button is pressed. The RW (Rewind) button works in a similar manner.

AM or FM Button (CD MODE)

Switches the radio into the AM or FM radio mode.

Notes On Playing MP3/WMA Files

The radio can play MP3/WMA files; however, acceptable MP3/WMA file recording media and formats are limited. When writing MP3/WMA files, pay attention to the following restrictions.

Supported Media (Disc Types)

The MP3/WMA file recording media supported by the radio are CDDA, CD-R, CD-RW, MP3,WMA, DVD Video, DVD-R, DVD-RW, DVD+R, DVD+RW, and CDDA+MP3.

Supported Medium Formats (File Systems)

The medium formats supported by the radio are ISO 9660 Level 1 and Level 2 and includes the Joliet extension. When reading discs recorded using formats other than ISO 9660 Level 1 and Level 2, the radio may fail to read files properly and may be unable to play the file normally. UDF and Apple HFS formats are not supported.

The radio uses the following limits for file systems:

- Maximum number of directory levels: 8
- Maximum number of files: 255
- Maximum number of folders: 100
- Maximum number of characters in file/folder names:
  - Level 1: 12 (including a separator "." and a three-character extension)
  - Level 2: 31 (including a separator "." and a three-character extension)

Multisession disc formats are supported by the radio. Multisession discs may contain combinations of normal CD audio tracks and computer files (including MP3/WMA files). Discs created with an option such as "keep disc open after writing" are most likely multisession discs. The use of multisession for CD audio or MP3/WMA playback may result in longer disc loading times.

If a disc contains multi-formats, such as CD audio and MP3/WMA tracks, the radio will only play the MP3/WMA tracks on that disc.

Supported MP3/WMA File Formats

The radio will recognize only files with the *.MP3/WMA extension as MP3/WMA files. Non-MP3/WMA files named with the *.MP3/WMA extension may cause playback problems. The radio is designed to recognize the file as an invalid MP3/WMA and will not play the file.

When using the MP3/WMA encoder to compress audio data to an MP3/WMA file, the bit rate and sampling frequencies in the following table are supported. In addition, variable bit rates (VBR) are also supported. The majority of MP3/WMA files use a 44.1 kHz sampling rate and a 192, 160, 128, 96 or VBR bit rates.

MPEG Specification	Sampling Frequency (kHz)	Bit Rate (kbps)
MPEG-1 Audio Layer 3	48, 44.1, 32	320, 256, 224, 192, 160, 128, 112, 96, 80, 64, 56, 48
MPEG-2 Audio Layer 3	24, 22.05, 16	160, 128, 144, 112, 96, 80, 64, 56, 48

WMA Specification	Sampling Frequency (kHz)	Bit Rate (kbps)
WMA	44.1 and 48	48, 64, 96, 128, 160, 192 VBR

ID3 Tag information for artist, song title, and album title are supported for ID3 version 1 tags. ID3 version 2 is not supported by the radios.

Playlist files are not supported. MP3 Pro files are not supported.

Playback of MP3/WMA Files

When a medium containing MP3/WMA data is loaded, the radio checks all files on the medium. If the medium contains a lot of folders or files, the radio will take more time to start playing the MP3/WMA files.

Loading times for playback of MP3/WMA files may be affected by the following:

- Media - CD-RW media may take longer to load than CD-R media
- Medium formats - Multisession discs may take longer to load than non-multisession discs
- Number of files and folders - Loading times will increase with more files and folders

To increase the speed of disc loading, it is recommended to use CD-R media and single-session discs. To create a single-session disc, enable the "Disc at Once" option before writing to the disc.

LIST Button (DISC Mode for MP3/WMA Play)

Pressing the LIST button will bring up a list of all folders on the disc. Scrolling up or down the list is done by turning the TUNE/SCROLL control knob. Selecting a folder by pressing the TUNE/SCROLL control knob will begin playing the files contained in that folder (or the next folder in sequence if the selection does not contain playable files).

The folder list will time out after five seconds.

INFO Button (DISC Mode for MP3/WMA Play)

Pressing the INFO button repeatedly will scroll through the following TAG information: Song Title, Artist, File Name, and Folder Name (if available).

Press the INFO button once more to return to "elapsed time" priority mode.

Press and hold the INFO button for three seconds or more and radio will display song titles for each file.

Press and hold the INFO button again for three seconds to return to "elapsed time" display.

Operation Instructions - Auxiliary Mode
The auxiliary (AUX) jack is an audio input jack which allows the user to plug in a portable device such as an MP3/WMA player, cassette player, or microphone and utilize the vehicle's audio system to amplify the source and play through the vehicle speakers.

Pressing the AUX button will change the mode to auxiliary device if the AUX jack is connected.

NOTE: The AUX device must be turned on and the device's volume set to the proper level. If the AUX audio is not loud enough, turn the device's volume up. If the AUX audio sounds distorted, turn the device's volume down.

SEEK Button (Auxiliary Mode)
No function.

SCAN Button (Auxiliary Mode)
No function.

EJECT Button (Auxiliary Mode)
No function.

TIME Button (Auxiliary Mode)
Press the TIME button to change the display from elapsed playing time to time of day. The time of day will display for five seconds.

RW/FF (Auxiliary Mode)
No function.

SET Button (Auxiliary Mode)
No function.

Operating Instructions — Voice Recognition System (VR) (If Equipped)
For the radio, refer to "Voice Recognition System (VR)" in Section 3.

For uconnect® "Voice Recognition System (VR)," refer to "uconnect® phone" in Section 3.

Operating Instructions - uconnect® phone (If Equipped)
Refer to "uconnect® phone" in Section 3.

Operating Instructions - uconnect® studios (Satellite Radio) (If Equipped)
Refer to "uconnect® studios (Satellite Radio)" in this section.

Operating Instructions - Video Entertainment System (VES)™ (If Equipped)
Refer to separate "Video Entertainment System (VES)™ Guide."

Dolby®
Manufactured under license from Dolby® Laboratories. "Dolby®" and the double-D symbol are trademarks of Dolby® Laboratories.

Macrovision
This product incorporates copyright protection technology that is protected by U.S. patents and other intellectual property rights. Use of this copyright protection technology must be authorized by Macrovision, and is intended for home and other limited viewing uses only, unless otherwise authorized by Macrovision. Reverse engineering or disassembly is prohibited.

DTS™
"DTS™" and "DTS™ 2.0" are trademarks of Digital Theater Systems, Inc.

AM/FM/CD/DVD RADIO (RER/REN) – IF EQUIPPED

NOTE: The sales code is located on the lower right side of the unit's faceplate.

The REN and RER radios contain a CD/DVD player, USB port, and a 30-gigabyte hard drive (HDD). Sirius Satellite Radio is optional. The 6.5 in (16.5 cm) touch screen allows for easy menu selection.

The RER radio also contains a Global Positioning System (GPS)-based Navigation system.

Refer to your uconnect® tunes (REN) or (RER) user's manual for detailed operating instructions.

Operating Instructions — Voice Recognition System (VR) — If Equipped

For the radio, refer to "Voice Recognition System (VR)" in Section 3.

Operating Instructions — uconnect® phone — If Equipped

Refer to "uconnect® phone" in Section 3.

Clock Setting Procedure

uconnect® gps — RER only

The GPS receiver used in this system is synchronized to the time data being transmitted by the GPS satellite. The satellite clock is Greenwich Mean Time (GMT). This is the worldwide standard for time. This makes the system's clock very accurate once the appropriate time zone and daylight savings information is set.

To Manually Set the Clock — RER/REN

1. Turn on the radio.
2. Touch the screen where the time is displayed.
3. Touch the screen where "User Clock" is displayed. The clock setting menu will appear on the screen.

4. To move the hour forward, touch the screen where the word “Hour” with the arrow pointing upward is displayed. To move the hour backward, touch the screen where the word “Hour” with the arrow pointing downward is displayed.

5. To move the minute forward, touch the screen where the word “Min” with the arrow pointing upward is displayed. To move the minute backward, touch the screen where the word “Min” with the arrow pointing downward is displayed.

6. To save the new time setting, touch the screen where the word “Save” is displayed.

Changing Daylight Savings Time

When selected, this feature will display the time of day in daylight savings time. Proceed as follows to change the current setting:

1. Turn on the radio.

2. Touch the screen where the time is displayed. The clock setting menu will appear on the screen.

3. When this feature is on, a check mark will appear in the box next to the words “Daylight Savings.” Touch the screen where the words “Daylight Savings” are displayed to change the current setting.

Show Time if Radio is Off

When selected, this feature will display the time of day on the touch screen when the radio is turned off. Proceed as follows to change the current setting:

1. Turn on the radio.

2. Touch the screen where the time is displayed. The clock setting menu will appear on the screen.

3. When this feature is on, a check mark will appear in the box next to the words “Show Time if Radio is Off.” Touch the screen where the words “Show Time if Radio is Off” are displayed to change the current setting.

Changing the Time Zone

1. Turn on the radio.

2. Touch the screen where the time is displayed. The clock setting menu will appear on the screen.

3. Touch the screen where the words “Set Time Zone” are displayed. The time zone selection menu will appear on the screen.

4. Select a time zone by touching the screen where your selection appears. If you do not see a time zone that you want to select, touch the screen where the word “Page” is displayed to view additional time zones in the menu.

5. Touch the screen where the word “Save” is displayed.

SALES CODE RES — AM/FM STEREO RADIO WITH CD PLAYER (MP3 AUX JACK)

NOTE: The radio sales code is located on the lower right side of the radio faceplate.

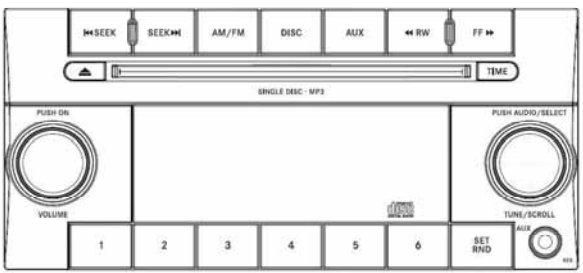

042305232

RES Radio

4

Operating Instructions — Radio Mode

NOTE: The ignition switch must be in the ON or ACC position to operate the radio.

Power Switch/Volume Control (Rotary)
Push the ON/VOLUME control knob to turn on the radio. Push the ON/VOLUME control knob a second time to turn off the radio.

Electronic Volume Control
The electronic volume control turns continuously (360 degrees) in either direction, without stopping. Turning the ON/VOLUME control knob to the right increases the volume, and to the left decreases it.

When the audio system is turned on, the sound will be set at the same volume level as last played.

SEEK Buttons
Press and release the SEEK buttons to search for the next listenable station in AM/FM mode. Press the right switch to seek up and the left switch to seek down. The radio will remain tuned to the new station until you make another selection. Holding either button will bypass stations without stopping, until you release it.

TIME Button
Press the TIME button to alternate locations of the time and frequency display.

Clock Setting Procedure

1. Press and hold the TIME button until the hours blink.

2. Adjust the hours by turning the right side TUNE/SCROLL control knob.

3. After adjusting the hours, press the right side TUNE/SCROLL control knob to set the minutes. The minutes will begin to blink.

4. Adjust the minutes using the right side TUNE/SCROLL control knob. Press the TUNE/SCROLL control knob to save time change.

5. To exit, press any button/knob, or wait five seconds.

RW/FF
Pressing the RW (Rewind) or FF (Fast Forward) buttons causes the tuner to search for the next frequency in the direction of the arrows. This feature operates in either AM or FM frequencies.

TUNE Control
Turn the rotary TUNE/SCROLL control knob clockwise to increase or counterclockwise to decrease the frequency.

Setting the Tone, Balance, and Fade
Push the rotary TUNE/SCROLL control knob and BASS will display. Turn the TUNE/SCROLL control knob to the right or left to increase or decrease the bass tones.

Push the rotary TUNE/SCROLL control knob a second time and MID will display. Turn the TUNE/SCROLL control knob to the right or left to increase or decrease the mid-range tones.

Push the rotary TUNE/SCROLL control knob a third time and TREBLE will display. Turn the TUNE/SCROLL control knob to the right or left to increase or decrease the treble tones.

Push the rotary TUNE/SCROLL control knob a fourth time and BALANCE will display. Turn the TUNE/SCROLL control knob to the right or left to adjust the sound level from the right or left side speakers.

Push the rotary TUNE/SCROLL control knob a fifth time and FADE will display. Turn the TUNE/SCROLL control knob to the left or right to adjust the sound level between the front and rear speakers.

Push the rotary TUNE/SCROLL control knob again to exit setting tone, balance, and fade.

AM/FM Button
Press the buttons to select either AM or FM mode.

SET/RND Button — To Set the Pushbutton Memory
When you are receiving a station that you wish to commit to pushbutton memory, press the SET/RND button. The symbol SET 1 will now show in the display window. Select the button (1 to 6) you wish to lock onto this station and press and release that button. If a button is not selected within five seconds after pressing the SET/RND button, the station will continue to play but will not be stored into pushbutton memory.

You may add a second station to each pushbutton by repeating the above procedure with this exception: Press the SET/RND button twice and SET 2 will show in the display window. Each button can be set for SET 1 and SET 2 in both AM and FM. This allows a total of 12 AM and 12 FM stations to be stored into pushbutton memory. The stations stored in SET 2 memory can be selected by pressing the pushbutton twice.

Every time a preset button is used, a corresponding button number will display.

Buttons 1 - 6
These buttons tune the radio to the stations that you commit to pushbutton memory (12 AM and 12 FM stations).

DISC Button
Pressing the DISC button will allow you to switch from AM/FM modes to Disc modes.

Operation Instructions — CD MODE For CD And MP3 Audio Play

NOTE:

- The ignition switch must be in the ON or ACC position to operate the radio.
- This radio is capable of playing compact discs (CD), recordable compact discs (CD-R), rewritable compact discs (CD-RW), compact discs with MP3 tracks and multisession compact discs with CD and MP3 tracks.

Inserting Compact Disc(s)

Gently insert one CD into the CD player with the CD label facing up. The CD will automatically be pulled into the CD player and the CD icon will illuminate on the radio display. If a CD does not go into the slot more than 1.0 in (2.5 cm), a disc may already be loaded and must be ejected before a new disc can be loaded.

If you insert a disc with the ignition ON and the radio ON, the unit will switch from radio to CD mode and begin to play when you insert the disc. The display will show the track number, and index time in minutes and seconds. Play will begin at the start of track 1.

CAUTION!

- **This CD player will accept 4-3/4 in (12 cm) discs only. The use of other sized discs may damage the CD player mechanism.**
- **Do not use adhesive labels. These labels can peel away and jam the player mechanism.**
- **RES is a single CD player. Do not attempt to insert a second CD if one is already loaded.**
- **Dual-media disc types (one side is a DVD, the other side is a CD) should not be used, and they can cause damage to the player.**

EJECT Button - Ejecting a CD

Press the EJECT button to eject the CD.

If you have ejected a disc and have not removed it within 10 seconds, it will be reloaded. If the CD is not removed, the radio will reinsert the CD but will not play it.

A disc can be ejected with the radio and ignition OFF.

NOTE: Ejecting with the ignition OFF is not allowed on convertible or soft-top models (if equipped).

SEEK Button

Press the right SEEK button for the next selection on the CD. Press the left SEEK button to return to the beginning of the current selection, or return to the beginning of the previous selection if the CD is within the first second of the current selection. Pressing and holding the SEEK button will allow faster scrolling through the tracks in CD and MP3 modes.

TIME Button

Press this button to change the display from a large CD playing time display to a small CD playing time display.

RW/FF

Press and hold the FF (Fast Forward) button and the CD player will begin to fast forward until FF is released, or RW or another CD button is pressed. The RW (Reverse) button works in a similar manner.

AM/FM Button

Press the button to select either AM or FM mode.

SET/RND Button (Random Play Button)
Press this button while the CD is playing to activate Random Play. This feature plays the selections on the compact disc in random order to provide an interesting change of pace.

Press the right SEEK button to move to the next randomly selected track.

Press the RND button a second time to stop Random Play.

Notes on Playing MP3 Files

The radio can play MP3 files; however, acceptable MP3 file recording media and formats are limited. When writing MP3 files, pay attention to the following restrictions.

Supported Media (Disc Types)
The MP3 file recording media supported by the radio are CDDA, CD-R, CD-RW, MP3, and CDDA+MP3.

Supported Medium Formats (File Systems)
The medium formats supported by the radio are ISO 9660 Level 1 and Level 2 and includes the Joliet extension. When reading discs recorded using formats other than ISO 9660 Level 1 and Level 2, the radio may fail to read files properly and may be unable to play the file normally. UDF and Apple HFS formats are not supported.

The radio uses the following limits for file systems:

- Maximum number of folder levels: 8
- Maximum number of files: 255
- Maximum number of folders. (The radio display of file names and folder names is limited. For large numbers of files and/or folders, the radio may be unable to display the file name and folder name, and will assign a number instead. With a maximum number of files,

exceeding 20 folders will result in this display. With 200 files, exceeding 50 folders will result in this display.)

- Maximum number of characters in file/folder names:
  - Level 1: 12 (including a separator "." and a three-character extension)
  - Level 2: 31 (including a separator "." and a three-character extension)

Multisession disc formats are supported by the radio. Multisession discs may contain combinations of normal CD audio tracks and computer files (including MP3 files). Discs created with an option such as "keep disc open after writing" are most likely multisession discs. The use of multisession for CD audio or MP3 playback may result in longer disc loading times.

Supported MP3 File Formats

The radio will recognize only files with the *.MP3 extension as MP3 files. Non-MP3 files named with the *.MP3 extension may cause playback problems. The radio is designed to recognize the file as an invalid MP3 and will not play the file.

When using the MP3 encoder to compress audio data to an MP3 file, the bit rate and sampling frequencies in the following table are supported. In addition, variable bit rates (VBR) are also supported. The majority of MP3 files use a 44.1 kHz sampling rate and a 192, 160, 128, 96 or VBR bit rate.

MPEG Specification	Sampling Frequency (kHz)	Bit Rate (kbps)
MPEG-1 Audio Layer 3	48, 44.1, 32	320, 256, 224, 192, 160, 128, 112, 96, 80, 64, 56, 48, 40, 32

MPEG Specification	Sampling Frequency (kHz)	Bit Rate (kbps)
MPEG-2 Audio Layer 3	24, 22.05, 16	160, 128, 144, 112, 96, 80, 64, 56, 48, 40, 32, 24, 16, 8

ID3 Tag information for artist, song title, and album title are supported for version 1 ID3 tags. ID3 version 2 is not supported by the radios.

Playlist files are not supported. MP3 Pro files are not supported.

Playback of MP3 Files
When a medium containing MP3 data is loaded, the radio checks all files on the medium. If the medium contains a lot of folders or files, the radio will take more time to start playing the MP3 files.

Loading times for playback of MP3 files may be affected by the following:

- Media - CD-RW media may take longer to load than CD-R media
- Medium formats - Multisession discs may take longer to load than non-multisession discs
- Number of files and folders - Loading times will increase with more files and folders

To increase the speed of disc loading, it is recommended to use CD-R media and single-session discs. To create a single-session disc, enable the “Disc at Once” option before writing to the disc.

Operation Instructions - Auxiliary Mode
The auxiliary (AUX) jack is an audio input jack, which allows the user to plug in a portable device, such as an

MP3 player, or cassette player, and utilize the vehicle's audio system to amplify the source and play through the vehicle speakers.

Pressing the DISC/AUX button will change the mode to auxiliary device if the AUX jack is connected.

NOTE: The AUX device must be turned on and the device's volume set to proper level. If the AUX audio is not loud enough, turn the device's volume up. If the AUX audio sounds distorted, turn the device's volume down.

TIME Button (Auxiliary Mode)
Press this button to change the display to time of day. The time of day will display for five seconds (when ignition is OFF).

SALES CODE RES/RSC — AM/FM STEREO RADIO WITH CD PLAYER (MP3 AUX JACK) AND SIRIUS RADIO

NOTE: The radio sales code is located on the lower right side of the radio faceplate.

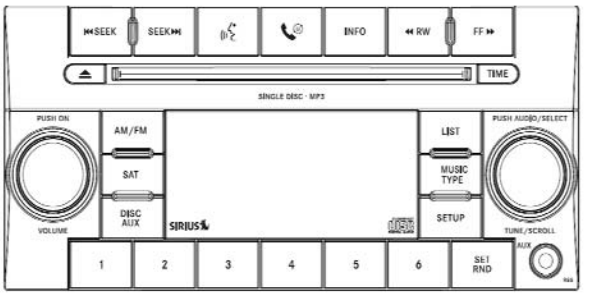

042305233

RES/RSC Radio

Operating Instructions — Radio Mode

NOTE: The ignition switch must be in the ON or ACC position to operate the radio.

Power Switch/Volume Control (Rotary)
Push the ON/VOLUME control knob to turn on the radio. Push the ON/VOLUME control knob a second time to turn off the radio.

Electronic Volume Control
The electronic volume control turns continuously (360 degrees) in either direction without stopping. Turning the ON/VOLUME control knob to the right increases the volume and to the left decreases it.

When the audio system is turned on, the sound will be set at the same volume level as last played.

SEEK Buttons
Press and release the SEEK buttons to search for the next listenable station in AM/FM mode. Press the right switch to seek up and the left switch to seek down. The radio will remain tuned to the new station until you make another selection. Holding either button will bypass stations without stopping until you release it.

Voice Recognition System (Radio) — If Equipped
Refer to "Voice Recognition System (VR)" in Section 3.

Voice Recognition Button uconnect® phone — If Equipped
Press this button to operate the uconnect® phone feature (if equipped). Refer to "uconnect® phone" in Section 3.

If your vehicle is not equipped with or this feature is not available on your vehicle, a "Not Equipped With uconnect" message will display on the radio screen.

Phone Button uconnect® phone — If Equipped
Press this button to operate the uconnect® phone feature (if equipped). Refer to "uconnect® phone" in Section 3.

If your vehicle is not equipped with or this feature is not available on your vehicle, a “Not Equipped With uconnect” message will display on the radio screen.

TIME Button
Press the TIME button to alternate locations of the time and frequency display.

Clock Setting Procedure

1. Press and hold the TIME button until the hours blink.

2. Adjust the hours by turning the right side TUNE/SCROLL control knob.

3. After adjusting the hours, press the right side TUNE/SCROLL control knob to set the minutes. The minutes will begin to blink.

4. Adjust the minutes using the right side TUNE/SCROLL control knob. Press the TUNE/SCROLL control knob to save time change.

5. To exit, press any button/knob or wait five seconds.

The clock can also be set by pressing the SETUP button. For vehicles equipped with satellite radio, press the SETUP button, use the TUNE/SCROLL control to select SET CLOCK, and then follow the above procedure, starting at Step 2. For vehicles not equipped with satellite radio, press the SETUP button and then follow the above procedure, starting at Step 2.

INFO Button
Press the INFO button for an RDS station (one with call letters displayed). The radio will return a Radio Text message broadcast from an FM station (FM mode only).

RW/FF
Pressing the RW (Rewind) or FF (Fast Forward) buttons causes the tuner to search for the next frequency in the direction of the arrows. This feature operates in either AM or FM frequencies.

TUNE Control
Turn the rotary TUNE/SCROLL control knob clockwise to increase or counterclockwise to decrease the frequency.

Setting the Tone, Balance, and Fade
Push the rotary TUNE/SCROLL control knob and BASS will display. Turn the TUNE/SCROLL control knob to the right or left to increase or decrease the bass tones.

Push the rotary TUNE/SCROLL control knob a second time and MID will display. Turn the TUNE/SCROLL control knob to the right or left to increase or decrease the mid-range tones.

Push the rotary TUNE/SCROLL control knob a third time and TREBLE will display. Turn the TUNE/SCROLL control knob to the right or left to increase or decrease the treble tones.

Push the rotary TUNE/SCROLL control knob a fourth time and BALANCE will display. Turn the TUNE/SCROLL control knob to the right or left to adjust the sound level from the right or left side speakers.

Push the rotary TUNE/SCROLL control knob a fifth time and FADE will display. Turn the TUNE/SCROLL control knob to the left or right to adjust the sound level between the front and rear speakers.

Push the rotary TUNE/SCROLL control knob again to exit setting tone, balance, and fade.

MUSIC TYPE Button
Pressing this button once will turn on the Music Type mode for five seconds. Pressing the MUSIC TYPE button or turning the TUNE/SCROLL control knob within five seconds will allow the program format type to be selected. Many radio stations do not currently broadcast Music Type information.

Toggle the MUSIC TYPE button to select the following format types:

Program Type	16-Digit Character Display
No program type or undefined	None
Adult Hits	Adlt Hit
Classical	Classicl
Classic Rock	Cls Rock
College	College
Country	Country
Foreign Language	Language
Information	Inform
Jazz	Jazz
News	News
Nostalgia	Nostalga
Oldies	Oldies
Personality	Persnlty
Public	Public
Rhythm and Blues	R & B
Religious Music	Rel Musc
Religious Talk	Rel Talk
Rock	Rock
Soft	Soft
Soft Rock	Soft Rck
Soft Rhythm and Blues	Soft R&B
Sports	Sports
Talk	Talk
Top 40	Top 40
Weather	Weather

By pressing the SEEK button when the Music Type icon is displayed, the radio will be tuned to the next frequency station with the same selected Music Type name. The Music Type function only operates when in the FM mode.

If a preset button is activated while in the Music Type (Program Type) mode, the Music Type mode will be exited and the radio will tune to the preset station.

SETUP Button
Pressing the SETUP button allows you to select between the following items:

- **Set Clock** — Pressing the SELECT button will allow you to set the clock. Turn the TUNE/SCROLL control knob to adjust the hours and then press and turn the TUNE/SCROLL control knob to adjust the minutes. Press the TUNE/SCROLL control knob again to save changes.

AM/FM Button
Press the button to select either AM or FM mode.

SET/RND Button — To Set the Pushbutton Memory
When you are receiving a station that you wish to commit to pushbutton memory, press the SET/RND button. The symbol SET 1 will now show in the display window. Select the button (1 to 6) you wish to lock onto this station and press and release that button. If a button is not selected within five seconds after pressing the SET/RND button, the station will continue to play but will not be stored into pushbutton memory.

You may add a second station to each pushbutton by repeating the above procedure with this exception: Press the SET/RND button twice and SET 2 will show in the display window. Each button can be set for SET 1 and SET 2 in both AM and FM. This allows a total of 12 AM

and 12 FM stations to be stored into pushbutton memory. The stations stored in SET 2 memory can be selected by pressing the pushbutton twice.

Every time a preset button is used, a corresponding button number will display.

Buttons 1 - 6
These buttons tune the radio to the stations that you commit to pushbutton memory (12 AM and 12 FM stations).

DISC/AUX Button
Pressing the DISC/AUX button will allow you to switch from AM/FM modes to DISC/AUX mode.

Operation Instructions — CD MODE for CD and MP3 Audio Play

NOTE:
- The ignition switch must be in the ON or ACC position to operate the radio.
- This radio is capable of playing compact discs (CD), recordable compact discs (CD-R), rewritable compact discs (CD-RW), compact discs with MP3 tracks and multisession compact discs with CD and MP3 tracks.

Inserting Compact Disc(s)
Gently insert one CD into the CD player with the CD label facing up. The CD will automatically be pulled into the CD player and the CD icon will illuminate on the radio display. If a CD does not go into the slot more than 1.0 in (2.5 cm), a disc may already be loaded and must be ejected before a new disc can be loaded.

If you insert a disc with the ignition ON and the radio ON, the unit will switch from radio to CD mode and begin to play when you insert the disc. The display will show the track number, and index time in minutes and seconds. Play will begin at the start of track 1.

CAUTION!

- **This CD player will accept 4–3/4 in (12 cm) discs only. The use of other sized discs may damage the CD player mechanism.**
- **Do not use adhesive labels. These labels can peel away and jam the player mechanism.**
- **RES is a single CD player. Do not attempt to insert a second CD if one is already loaded.**
- **Dual-media disc types (one side is a DVD, the other side is a CD) should not be used, and they can cause damage to the player.**

EJECT Button - Ejecting a CD

Press the EJECT button to eject the CD.

If you have ejected a disc and have not removed it within 10 seconds, it will be reloaded. If the CD is not removed, the radio will reinsert the CD but will not play it.

A disc can be ejected with the radio and ignition OFF.

NOTE: Ejecting with the ignition OFF is not allowed on convertible or soft-top models (if equipped).

SEEK Button

Press the right SEEK button for the next selection on the CD. Press the left SEEK button to return to the beginning of the current selection, or return to the beginning of the previous selection if the CD is within the first second of the current selection. Pressing and holding the SEEK button will allow faster scrolling through the tracks in CD and MP3 modes.

TIME Button

Press this button to change the display from a large CD playing time display to a small CD playing time display.

RW/FF
Press and hold FF (Fast Forward) and the CD player will begin to fast forward until FF is released or RW or another CD button is pressed. The RW (Reverse) button works in a similar manner.

AM/FM Button
Press the button to select either AM or FM mode.

SET/RND Button (Random Play Button)
Press this button while the CD is playing to activate Random Play. This feature plays the selections on the compact disc in random order to provide an interesting change of pace.

Press the right SEEK button to move to the next randomly selected track.

Press the SET/RND button a second time to stop Random Play.

Notes On Playing MP3 Files

The radio can play MP3 files; however, acceptable MP3 file recording media and formats are limited. When writing MP3 files, pay attention to the following restrictions.

Supported Media (Disc Types)
The MP3 file recording media supported by the radio are CDDA, CD-R, CD-RW, MP3, and CDDA+MP3.

Supported Medium Formats (File Systems)
The medium formats supported by the radio are ISO 9660 Level 1 and Level 2 and includes the Joliet extension. When reading discs recorded using formats other than ISO 9660 Level 1 and Level 2, the radio may fail to read files properly and may be unable to play the file normally. UDF and Apple HFS formats are not supported.

The radio uses the following limits for file systems:

- Maximum number of folder levels: 8

- Maximum number of files: 255
- Maximum number of folders. (The radio display of file names and folder names is limited. For large numbers of files and/or folders, the radio may be unable to display the file name and folder name and will assign a number instead. With a maximum number of files, exceeding 20 folders will result in this display. With 200 files, exceeding 50 folders will result in this display.)
- Maximum number of characters in file/folder names:
  - Level 1: 12 (including a separator "." and a three-character extension)
  - Level 2: 31 (including a separator "." and a three-character extension)

Multisession disc formats are supported by the radio. Multisession discs may contain combinations of normal CD audio tracks and computer files (including MP3 files). Discs created with an option such as "keep disc open after writing" are most likely multisession discs. The use of multisession for CD audio or MP3 playback may result in longer disc loading times.

Supported MP3 File Formats

The radio will recognize only files with the *.MP3 extension as MP3 files. Non-MP3 files named with the *.MP3 extension may cause playback problems. The radio is designed to recognize the file as an invalid MP3 and will not play the file.

When using the MP3 encoder to compress audio data to an MP3 file, the bit rate and sampling frequencies in the following table are supported. In addition, variable bit rates (VBR) are also supported. The majority of MP3 files use a 44.1 kHz sampling rate and a 192, 160, 128, 96 or VBR bit rates.

MPEG Specification	Sampling Frequency (kHz)	Bit Rate (kbps)
MPEG-1 Audio Layer 3	48, 44.1, 32	320, 256, 224, 192, 160, 128, 112, 96, 80, 64, 56, 48, 40, 32
MPEG-2 Audio Layer 3	24, 22.05, 16	160, 128, 144, 112, 96, 80, 64, 56, 48, 40, 32, 24, 16, 8

ID3 Tag information for artist, song title, and album title are supported for version 1 ID3 tags. ID3 version 2 is not supported by the radios.

Playlist files are not supported. MP3 Pro files are not supported.

Playback of MP3 Files

When a medium containing MP3 data is loaded, the radio checks all files on the medium. If the medium contains a lot of folders or files, the radio will take more time to start playing the MP3 files.

Loading times for playback of MP3 files may be affected by the following:

- Media - CD-RW media may take longer to load than CD-R media
- Medium formats - Multisession discs may take longer to load than non-multisession discs
- Number of files and folders - Loading times will increase with more files and folders

To increase the speed of disc loading, it is recommended to use CD-R media and single-session discs. To create a single-session disc, enable the “Disc at Once” option before writing to the disc.

LIST Button (CD Mode for MP3 Play)

Pressing the LIST button will bring up a list of all folders on the disc. Scrolling up or down the list is done by turning the TUNE/SCROLL control knob. Selecting a folder by pressing the TUNE/SCROLL control knob will begin playing the files contained in that folder (or the next folder in sequence if the selection does not contain playable files).

The folder list will time out after five seconds.

INFO Button (CD Mode for MP3 Play)

Pressing the INFO button repeatedly will scroll through the following TAG information: Song Title, Artist, File Name, and Folder Name (if available).

Press the INFO button once more to return to "elapsed time" priority mode.

Press and hold the INFO button for three seconds or more and the radio will display song titles for each file.

Press and hold the INFO button again for three seconds to return to "elapsed time" display.

Operation Instructions - Auxiliary Mode

The auxiliary (AUX) jack is an audio input jack which allows the user to plug in a portable device such as an MP3 player or cassette player and utilize the vehicle's audio system to amplify the source and play through the vehicle speakers.

Pressing the AUX button will change the mode to auxiliary device if the AUX jack is connected.

NOTE: The AUX device must be turned on and the device's volume set to the proper level. If the AUX audio is not loud enough, turn the device's volume up. If the AUX audio sounds distorted, turn the device's volume down.

TIME Button (Auxiliary Mode)
Press this button to change the display to time of day. The time of day will display for five seconds (when the ignition is OFF).

Operating Instructions - uconnect® phone (If Equipped)
Refer to "uconnect® phone" in Section 3.

Operating Instructions - uconnect® studios (Satellite Radio) (If Equipped)
Refer to "uconnect® studios (Satellite Radio)" in this section.

UNIVERSAL CONSUMER INTERFACE (UCI) — IF EQUIPPED

NOTE: This section is for sales code RES and REQ/REL/RET radios only with uconnect®. For sales code RER, REN, REP, REW or REZ touch-screen radio UCI feature, refer to the separate RER, REN or REZ User's Manual. UCI is available only if equipped as an option with these radios.

This feature allows you to plug an iPod® into the vehicle's sound system through a 16–pin connector using the provided interface cable.

UCI supports Mini, 4G, Photo, Nano, 5G iPod® and iPhone® devices. Some iPod® software versions may not fully support the UCI features. Please visit Apple's website for software updates.

NOTE:
- If the radio has a USB port, connecting an iPod® to this port does not play the media. For playing an iPod®, use the separate 16–pin connector port (in the glove compartment on some vehicles).

- Connecting an iPod® to the AUX port located in the radio faceplate, plays media, but does not use the UCI feature to control the connected device.

Connecting The iPod®

Use the optional connection cable to connect an iPod® to the vehicle's 16–pin connector port (which is located in the glove compartment on some vehicles). Once the iPod® is connected and synchronized to the vehicle's UCI system (iPod® may take a few seconds to connect), the iPod® starts charging and is ready for use by pressing radio switches, as described below.

NOTE:

- You may have to remove the connector pin protection cap from the 16–pin connector port, prior to connecting the cable.
- If the iPod® battery is completely discharged, it may not communicate with the UCI system until a minimum charge is attained. Leaving the iPod® connected to the UCI system may charge it to the required level.

Using This Feature

By using the optional connection cable to connect an iPod® to the vehicle's UCI 16–pin connector port:

- The iPod® audio can be played on the vehicle's sound system, providing metadata (Artist, track title, album, etc.) information on the radio display.
- The iPod® can be controlled using the radio buttons to Play, Browse, and List the iPod® contents.
- The iPod® battery charges when plugged into the UCI connector.

Controlling The iPod® Using Radio Buttons

To get into the UCI (iPod®) mode and access a connected iPod®, press the 'AUX' button on the radio faceplate.

Once in the UCI (iPod®) mode, iPod® audio tracks (if available from iPod®) start playing over the vehicle's audio system.

Play Mode

When switched to UCI mode, the iPod® automatically starts Play mode. In Play mode, you may use the following buttons on the radio faceplate to control the iPod® and display data:

- Use the TUNE control knob to select the next or previous track.
  - Turning it clockwise (forward) by one click, while playing a track, skips to the next track.
  - Turning it counterclockwise (backward) by one click, during the first two seconds of the track, will jump to the previous track in the list. Turning this button at any other time in the track, will jump to the beginning of the current track.
  - Jump backward in the current track by pressing and holding the << **RW** button. Holding the << **RW** button long enough will take you to the beginning of the current track.
- Jump forward in the current track by pressing and holding the **FF** >> button.
- A single press backward << **RW** or forward **FF** >> will jump backward or forward respectively, for five seconds.
- Use the << **SEEK** and **SEEK** >> buttons to jump to the previous or next track. If the << **SEEK** button is pressed during the first two seconds of the track, it will jump to the previous track in the list, if you press this button at any other time in the track it will jump to the beginning of the track. If you press the **SEEK** >> button during play mode, it will jump to the next track in the list.

- While a track is playing, press the **INFO** button to see the associated metadata (Artist, track title, album, etc.) for that track. Pressing the **INFO** button again jumps to the next screen of data for that track. Once you have seen all screens, the last **INFO** button press will take you back to the play mode screen on the radio.
- Pressing the **REPEAT** button will change the iPod® mode to repeat the current playing track.
- Press the **SCAN** button to use iPod® scan mode, which will play the first five seconds of each track in the current list and then forward to the next song. To stop SCAN mode and start playing the desired track, when it is playing the track, press the **SCAN** button again. During Scan mode you can also press the << **SEEK** and **SEEK** >> buttons to select the previous and next tracks.
- **RND** button (available on sales code RES radio only): Pressing this button toggles between Shuffle ON and Shuffle OFF modes for the iPod®. If the **RND** icon is showing on the radio display, then the shuffle mode is ON.

List Or Browse Mode

During Play mode, pressing any of the buttons described below, takes you to List mode. List mode enables you to scroll through the list of menus and tracks on the iPod®.

- **TUNE** control knob: The **TUNE** control knob functions in a similar manner as the scroll wheel on the iPod®.
  - Turning it clockwise (forward) and counterclockwise (backward) scrolls through the lists, displaying the track detail on the radio display. Once you have the track to be played highlighted on the radio display, press the **TUNE** control knob to select and start playing the track. Turning the **TUNE** control knob fast will scroll through the list faster. During fast scroll, you may notice a slight delay in updating the information on the radio display.

- During all List modes, the iPod® displays all lists in "wrap-around" mode. So if the track is at the bottom of the list just turn the wheel backwards (counter-clockwise) to get to the track faster.
- In List mode, the radio **PRESET** Buttons are used as shortcuts to the following lists on the iPod®.
  - Preset 1 – Playlists
  - Preset 2 – Artists
  - Preset 3 – Albums
  - Preset 4 – Genres
  - Preset 5 - Audiobooks
  - Preset 6 – Podcasts
- Pressing a PRESET button, will display the current list on the top line and the first item in that list on the second line.
  - To Exit List mode without selecting a track, press the same **PRESET** button again to go back to **Play mode**.
- **LIST** button: The **LIST** button will display the top level menu of the iPod®. Turn the **TUNE** control knob to list the top-menu item you wish to select and press the **TUNE** control knob. This will display the next sub-menu list item on the iPod® then you can follow the same steps to go to the desired track in that list. Not all iPod® sub-menu levels are available on this system.
- **MUSIC TYPE** button: The **MUSIC TYPE** button is another shortcut button to the genre listing on your iPod®.

CAUTION!

- **Leaving the iPod® (or any supported device) anywhere in the vehicle in extreme heat or cold can alter the operation, or damage the device. Follow the device manufacturer's guidelines.**
- **Placing items on the iPod®, or connections to the iPod® in the vehicle, can cause damage to the device and/or to the connectors.**

WARNING!

Do not plug in or remove the iPod® while driving. Failure to following this warning could result in an accident.

uconnect® studios (SATELLITE RADIO) — IF EQUIPPED (REN/REQ/RER/RES/REU RADIOS ONLY)

Satellite radio uses direct satellite-to-receiver broadcasting technology to provide clear digital sound, coast to coast. The subscription service provider is Sirius Satellite Radio. This service offers over 130 channels of music, sports, news, entertainment, and programming for children, directly from its satellites and broadcasting studios.

NOTE: Sirius service is not available in Hawaii and has limited coverage in Alaska.

System Activation

Sirius Satellite Radio service is pre-activated and you may begin listening immediately to the one year of audio service that is included with the factory-installed satellite radio system in your vehicle. Sirius will supply a welcome kit that contains general information, including

how to setup your on-line listening account at no additional charge. For further information, call the toll-free number 888-539-7474, or visit the Sirius web site at www.sirius.com, or at www.siriuscanada.ca for Canadian residents.

Electronic Serial Number/Sirius Identification Number (ESN/SID)

Please have the following information available when calling:

1. The Electronic Serial Number/Sirius Identification Number (ESN/SID).

2. Your Vehicle Identification Number.

To access the ESN/SID, refer to the following steps:

ESN/SID Access With REQ/RES Radios

With the ignition switch in the ON/RUN or ACC position and the radio on, press the SETUP button and scroll using the TUNE/SCROLL control knob until Sirius ID is selected. Press the TUNE/SCROLL control knob and the Sirius ID number will display. The Sirius ID number display will time out in two minutes. Press any button on the radio to exit this screen.

ESN/SID Access With REN/RER Radios

While in SAT mode, press the MENU button on the radio faceplate.

Next, touch the SUBSCRIPTION tab on the touch screen. All the ESNs that apply to your vehicle will display.

ESN/SID Access With REU Radio

While in SAT mode, press the MENU button on the radio faceplate.

Next, turn the knob surrounding the joystick in the center of the radio to scroll to Subscription, and then press and release the joystick. All of the ESNs that apply to your vehicle will display.

Selecting uconnect® studios (Satellite) Mode

Press the SAT button until "SAT" appears in the display. A CD may remain in the radio while in the Satellite radio mode.

Satellite Antenna

To ensure optimum reception, do not place items on the roof around the rooftop antenna location or strap items to the trunk lid around the trunk lid antenna (if equipped). Metal objects placed within the line of sight of the antenna will cause decreased performance. Larger luggage items such as bikes should be placed as far rearward as possible, within the loading design of the rack. Do not place items directly on or above the antenna.

Reception Quality

Satellite reception may be interrupted due to one of the following reasons:

- The vehicle is parked in an underground parking structure or under a physical obstacle.
- Dense tree coverage may interrupt reception in the form of short audio mutes.
- Driving under wide bridges or along tall buildings can cause intermittent reception.
- Placing objects over or too close to the antenna can cause signal blockage.

Operating Instructions — uconnect® studios (Satellite) Mode

NOTE: The ignition switch must be in the ON or ACC position to operate the radio.

SEEK Buttons

Press and release the SEEK buttons to search for the next channel in Satellite mode. Press the right switch to seek up and the left switch to seek down. The radio will remain tuned to the new channel until you make another selection. Holding either button will bypass channels without stopping until you release it.

SCAN Button (When Equipped)
Pressing the SCAN button causes the tuner to search for the next channel, pausing for eight seconds before continuing to the next. To stop the search, press the SCAN button a second time.

INFO Button — Except REU Radio
Pressing the INFO button will cycle the display information between Artist, Song Title, and Composer (if available). Also, pressing and holding the INFO button for an additional three seconds will make the radio display the song title all of the time (press and hold again to return to normal display).

INFO Button — REU Radio
Pressing the INFO button will display information about Artist, Song Title, and Composer (if available). Pressing the INFO button again will close the INFO screen.

RW/FF
Pressing the RW (Rewind) or FF (Fast Forward) buttons causes the tuner to search for the next channel in the direction of the arrows.

TUNE Control (Rotary)
Turn the rotary TUNE/SCROLL control knob clockwise to increase or counterclockwise to decrease the channel.

MUSIC TYPE Button — Except REU Radio
Pressing this button once will turn on the Music Type mode for five seconds. Pressing the MUSIC TYPE button or turning the TUNE/SCROLL control knob within five seconds will allow the program format type to be selected.

Toggle the MUSIC TYPE button again to select the music type.

By pressing the SEEK button when the Music Type function is active, the radio will be tuned to the next channel with the same selected Music Type name.

If a preset button is activated while in the Music Type (Program Type) mode, the Music Type mode will be exited and the radio will tune to the preset channel.

MUSIC TYPE Button — REU Radio

Pressing this button provides a Music Type list from which you can make a selection. Once a selection is made, you can seek up or down or scan the channels and the radio will tune to the next station matching the selected format. There is no time-out for this screen. Pressing the MUSIC TYPE button again will close the Music Type screen. Once closed, seek up, seek down, and scan will no longer be based on your selection.

SETUP Button

Pressing the SETUP button allows you to select the following items:

- Display Sirius ID number — Press the AUDIO/ SELECT button to display the Sirius ID number. This number is used to activate, deactivate, or change the Sirius subscription.

SET Button – To Set the Pushbutton Memory

When you are receiving a channel that you wish to commit to pushbutton memory, press the SET button. The symbol SET 1 will now show in the display window. Select the button (1-6) you wish to lock onto this channel and press and release that button. If a button is not selected within five seconds after pressing the SET button, the channel will continue to play but will not be stored into pushbutton memory.

You may add a second channel to each pushbutton by repeating the above procedure with this exception: Press the SET button twice and SET 2 will show in the display window. Each button can be set for SET 1 and SET 2. This allows a total of 12 Satellite channels to be stored into pushbutton memory. The channels stored in SET 2 memory can be selected by pressing the pushbutton twice.

Every time a preset button is used, a corresponding button number will display.

Buttons 1 - 6
These buttons tune the radio to the channels that you commit to pushbutton memory (12 Satellite stations).

Operating Instructions — uconnect® phone (If Equipped)

Refer to "uconnect® phone" in Section 3.

Operating Instructions — Video Entertainment System (VES)™ (If Equipped)

Refer to separate "Video Entertainment System (VES)™ Guide."

KICKER® HIGH PERFORMANCE SOUND SYSTEM WITH DRIVER-SELECTABLE SURROUND (DSS) – IF EQUIPPED

Your vehicle is equipped with a state of the art audio amplifier that provides 5.1-channel surround sound from any stereo audio source. A new feature of the Kicker® audio system offers the ability to choose surround sound for any audio source.

"Audio Surround" is optimized for front seat passengers for any audio source. This surround effect is available for audio from any source – AM/FM/CD/ Satellite Radio or AUX – and is activated through the Electronic Vehicle Information Center (EVIC). Refer to "Driver-Selectable Surround Sound (DSS)" under "Electronic Vehicle Information Center (EVIC)" in Section 4.

DSS modes for audio sources are "Stereo" and "Audio Surround," which is surround sound equalized for the front seat occupants. Please note that DSS effects are dependent on the mix of the original recording. Some audio will sound better in DSS modes, others in Stereo mode.

When in "Audio Surround" mode, balance is set automatically. Fader control is available to add more surround audio if desired.

uconnect studios® (SIRIUS BACKSEAT TV™) — IF EQUIPPED

Satellite video uses direct satellite receiver broadcasting technology to provide streaming video. The subscription service provider is SIRIUS Satellite Radio. SIRIUS Backseat TV™ offers three video channels for family entertainment, directly from its satellites and broadcasting studios.

NOTE: SIRIUS service is not available in Hawaii and has limited coverage in Alaska.

Refer to your Video Entertainment System (VES)™, RER Navigation or REN Multimedia User Manuals for detailed operating instructions.

VIDEO ENTERTAINMENT SYSTEM (VES)™ — IF EQUIPPED

The optional Video Entertainment System (VES)™ includes the following components for rear seat entertainment:

- A diagonal 7 in (17.8 cm) Liquid Crystal Display (LCD) screen integrated into the center console armrest. The screen features brightness control for optimum daytime and nighttime viewing.

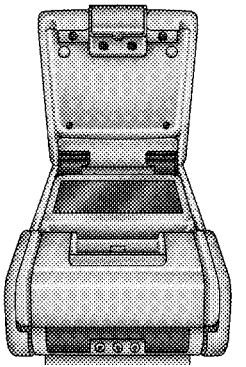

Opening the Rear Seat VES™

- The LCD screen swings up from the rear of the armrest to allow the rear seat passenger(s) to view the display.

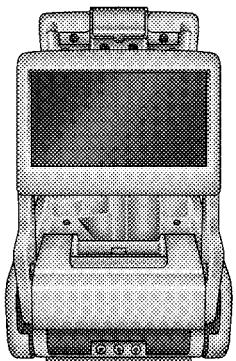

VES™ Video Screen

NOTE: Close the armrest after the LCD screen has been raised to its viewing position.

- The radio and DVD player controls allow front seat operation for easy setup in the case of younger rear seat passengers.
- A battery-powered infrared remote control snaps into a molded compartment in the center console armrest upper storage bin.

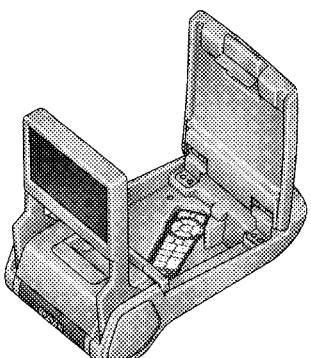

VES™ Remote Control

- Two wireless infrared headsets allow rear seat passengers to listen to the same or individual audio sources.

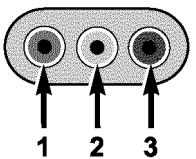

Audio/Video RCA Jacks (AUX Jacks) on the rear of the center console enable the monitor to display video directly from a video camera, connect video games for display on the screen, or play music directly from an MP3 player.

1. Video in (yellow)
2. Left audio in (white)
3. Right audio in (red)

NOTE: Refer to your "Vehicle Entertainment System (VES)™ Users Manual" for detailed operating instructions.

REMOTE SOUND SYSTEM CONTROLS

The remote sound system controls are located on the surface of the steering wheel at the three and nine o'clock positions.

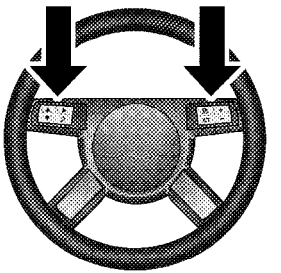

045105297

Remote Sound System Controls

Vehicles equipped with steering wheel-mounted buttons are also equipped with the Electronic Vehicle Information Center (EVIC). The EVIC features a driver-interactive display which is located in the instrument cluster.

VOLUME Button

The VOLUME button controls the sound level of the sound system. Press the top of the VOLUME button to increase the sound level. Press the bottom of the VOLUME button to decrease the sound level.

AUDIO MODE Button

Press the AUDIO MODE button to select the Compass/Temp/Audio screen. This screen displays radio and media mode information depending on which radio is in the vehicle.

If the Compass/Temp/Audio screen is already displayed when the AUDIO MODE button is pressed, then the mode will change (i.e., from AM to FM, to Media mode, etc., depending on which radio is in the vehicle).

FUNCTION SELECT Button

When the EVIC is in the Compass/Temp/Audio screen, press the FUNCTION SELECT button to operate various radio, media, and Universal Customer Interface (UCI) functions (i.e., advance presets, select next folder, jump to or start playing songs in playlists, etc., depending on which radio is in the vehicle and if equipped with UCI).

SCROLL Button

When the EVIC is in the Compass/Temp/Audio screen, press the SCROLL button to seek up and down radio stations, tracks, chapters, files, etc., depending on which radio is in the vehicle.

CD/DVD MAINTENANCE

To keep a CD/DVD in good condition, take the following precautions:

1. Handle the disc by its edge; avoid touching the surface.

2. If the disc is stained, clean the surface with a soft cloth, wiping from center to edge.

3. Do not apply paper or tape to the disc; avoid scratching the disc.

4. Do not use solvents such as benzene, thinner, cleaners, or antistatic sprays.

5. Store the disc in its case after playing.

6. Do not expose the disc to direct sunlight.

7. Do not store the disc where temperatures may become too high.

NOTE: If you experience difficulty in playing a particular disc, it may be damaged (i.e. scratched, reflective coating removed, a hair, moisture or dew on the disc) oversized, or have protection encoding. Try a known good disc before considering disc player service.

RADIO OPERATION AND CELLULAR PHONES

Under certain conditions, the cellular phone being on in your vehicle can cause erratic or noisy performance from your radio. This condition may be lessened or eliminated by relocating the cellular phone antenna. This condition is not harmful to the radio. If your radio performance does not satisfactorily “clear” by the repositioning of the antenna, it is recommended that the radio volume be turned down or off during cellular phone operation.

CLIMATE CONTROLS

The air conditioning and heating system is designed to make you comfortable in all types of weather.

Manual Air Conditioning and Heating System

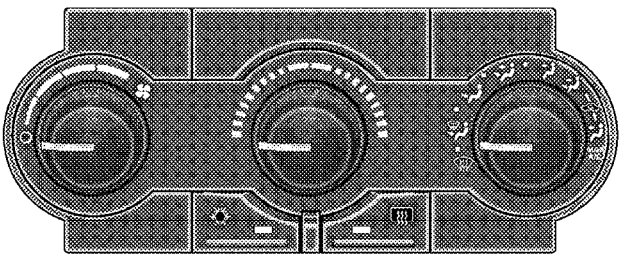

045605916

Manual Temperature Controls

Blower Control

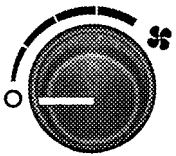

812d1942

The rotary knob on the left controls the blower. The control has an OFF position and four speed settings. **The blower will remain on until the control is turned to the OFF position or the ignition is turned OFF.**

NOTE: For vehicles equipped with Remote Start, the climate controls will not function during Remote Start operation if the blower control is left in the "O" (Off) position.

Temperature Control

The rotary knob in the center controls air temperature. Rotate the control to the left for cooler air temperature and to the right for warmer air temperature. Rotating the control to the extreme left provides the coldest setting. Rotating the control to the extreme right provides the warmest setting.

Mode Control

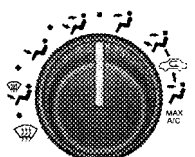

The rotary knob on the right controls airflow distribution. Dots between each of the mode selections identify intermediate modes that allow the operator to fine-tune airflow distribution. The mode settings are as follows:

- *Defrost*

Air is directed to the windshield through the outlets at the base of the windshield. Air is also directed to the front door windows through the side window demister grilles.

NOTE: To improve fuel economy, leave in defrost only when necessary.

- *Defrost/Floor*

Air flows through the front and rear floor outlets and the outlets at the base of the windshield. Air is also directed to the front door windows through the side window demister grilles.

- *Floor*

Air flows through the floor outlets located under the instrument panel and into the rear seating area through vents under the front seats.

- *Bi-Level*

Air flows through the outlets located in the instrument panel and through the outlets located on the floor. Air flows through the registers in the back of the center console to the rear seat passengers. These registers can be closed to partially block airflow.

- *Panel*

Air flows through the outlets located in the instrument panel. Air flows through the registers in the back of the center console to the rear seat passengers. These registers can be closed to block airflow.

- *Recirculation Control*

The mode control knob also controls the recirculation feature. You can choose Bi-Level Recirculation air outlets, Panel Recirculation air outlets, or a mix or both while in this mode. Normally, air enters from outside the vehicle. However, when in Recirculation mode air inside the vehicle is re-used. Use this mode to cool the inside of the vehicle rapidly. The Recirculation mode can also be used to temporarily block out outside odors, smoke, and dust.

Air Conditioning Control

Press this button to turn on and turn off the air conditioning. When the air conditioning is turned on, cool dehumidified air will flow through the outlets selected with the mode control. Press this button a second time to turn off the air conditioning. An indicator in the button will illuminate when compressor operation is selected.

Automatic Temperature Control — If Equipped

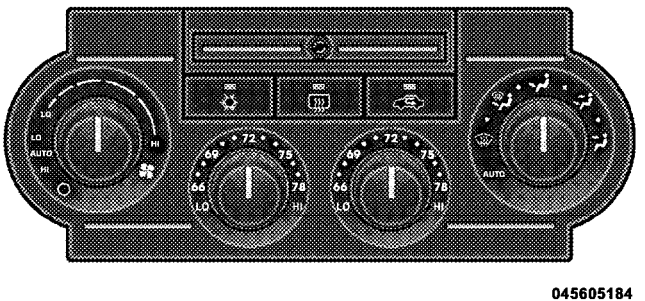

Automatic Temperature Controls

Automatic Operation

The Dual-Zone Climate Control System automatically maintains the climate in the cabin of the vehicle at the comfort levels desired by the driver and passenger.

Operation of the system is quite simple. Begin by turning the mode control knob (on the right) to AUTO, and place the blower control knob (on the left) to either LO AUTO or HI AUTO. The LO AUTO position should be used for front seat occupants only. The HI AUTO position should be used when more airflow is desired, or when rear seat occupants are present. Then, dial in the temperature you would like the system to maintain by rotating the driver or passenger temperature control knob. Once the comfort level is selected, the system will maintain that level automatically using the heating system. Should the desired comfort level require air conditioning, the system will automatically make the adjustment.

You will experience the greatest efficiency by simply allowing the system to function automatically. Selecting the OFF position on the fan control stops the system completely and closes the outside air intake.

72°F (22°C) is the recommended setting for maximum comfort for the average person; however, this may vary.

NOTE: The temperature setting can be adjusted at any time without affecting automatic operation.

Air conditioning in this system is automatic. Pressing the air conditioning control button while in AUTO mode will cause the indicator in the control button to flash three times and then turn off. This indicates that the system is in AUTO mode and requesting the air conditioning is not necessary.

The system will automatically control recirculation. However, pressing the recirculation control button will temporarily put the system in Recirculation mode (10 minutes). This can be used when outside conditions such as smoke, odors, dust, or high humidity are present. Activating recirculation will cause the indicator in the control button to illuminate. After 10 minutes, the system will return to normal AUTO mode function and the indicator will turn off.

NOTE:

- The surface of the climate control panel and the top center of the instrument panel should be kept free of debris due to the location of the climate control sensors. Mud on the windshield may also cause poor operation of this system.
- Extended use of recirculation may cause the windows to fog. If the interior of the windows begin to fog, press the recirculation button to return to outside air. Some temp/humidity conditions will cause captured interior air to condense on windows and hamper visibility. For this reason, the system will not allow recirculation to be selected while in Defrost or Defrost/Floor mode.

Attempting to use the recirculation while in these modes will cause the indicator in the control button to blink and then turn off.

Manual Operation

This system offers a full complement of manual override features, which consist of blower preferred automatic, mode preferred automatic, or blower and mode preferred automatic. This means the operator can override the blower, the mode, or both. There is a manual blower range for times when the AUTO setting is not desired. The blower can be set to any fixed blower speed by rotating the blower control knob (on the left).

NOTE: Please read the automatic temperature control operation chart that follows for details.

Automatic Temperature Control Operation		The system will…				
Operation	**How**	**Blower Control**	**Mode Control**	**Air Temperature Control**	**Air Recirculation Control**	**A/C Operation**
Full Automatic Operation	Set blower knob to either Hi or Lo Auto. Set mode knob to Auto. Set temperature knobs for comfort.	Automatic	Automatic	Automatic	Automatic but can be overridden for 10 minutes at a time.	Automatic
Blower Preferred Automatic	Set blower knob to any desired airflow level other than Hi or Lo Auto. Set mode knob to Auto. Set temperature knobs for comfort.	User selectable to any speed.	Automatic	Automatic	Automatic but can be overridden for 10 minutes at a time.	Automatic
Mode Preferred Automatic	Set mode knob to any desired air delivery point other than Auto. Set blower knob to either Hi or Lo Auto. Set temperature knobs for comfort.	Automatic	User selectable to any air delivery point.	Automatic	User selectable outside or recirculated.	User selectable A/C on or off.
Blower and Mode Preferred Automatic	Set blower knob to any desired airflow level other than Hi or Lo Auto. Set mode knob to any desired air delivery point other than Auto. Set temperature knobs for comfort.	User selectable to any speed.	User selectable to any air delivery point.	Automatic	User selectable outside or recirculated.	User selectable A/C on or off.

The operator can override the AUTO mode setting to change airflow distribution by rotating the mode control knob (on the right) to one of the following positions.

- *Defrost*

Air is directed to the windshield through the outlets at the base of the windshield. Air is also directed to the front door windows through the side window demister grilles.

- *Defrost/Floor*

Air flows through the front and rear floor outlets and the outlets at the base of the windshield. Air is also directed to the front door windows through the side window demister grilles.

- *Floor*

Air flows through the floor outlets located under the instrument panel and into the rear seating area through vents under the front seats.

- *Bi-Level*

Air flows through the outlets located in the instrument panel and through the outlets located on the floor. Air flows through the registers in the back of the center console to the rear seat passengers. These registers can be closed to block airflow.

- *Panel*

Air flows through the outlets located in the instrument panel. Air flows through the registers in the back of the center console to the rear seat passengers. These registers can be closed to block airflow.

- *Air Conditioning Control*

Press this button to turn on the air conditioning during manual operation only. When the air conditioning is turned on, cool dehumidified air will flow through the outlets selected with the mode control dial. Press this button a second time to turn off the air

conditioning. An indicator in the button illuminates when manual compressor operation is selected.

NOTE: To control the air conditioning manually, the mode selector must be moved out of the AUTO position.

- ***Recirculation Control***

This button can be used to block out smoke, odors, dust, high humidity, or if rapid cooling is desired. The Recirculation mode should only be used temporarily. An indicator in the button illuminates when the Recirculation mode is active. You may use this feature separately.

NOTE: Extended use of recirculation may cause the windows to fog. If the interior of the windows begins to fog, press the recirculation button to return to outside air. Some temp/humidity conditions will cause captured interior air to condense on windows and hamper visibility. For this reason, the system will not allow recirculation to be selected while in Defrost or Defrost/Floor mode. Attempting to use the recirculation while in these modes will cause the indicator in the control button to blink and then turn off.

Operating Tips

NOTE: Refer to the chart at the end of this section for suggested control settings for various weather conditions.

Summer Operation

The engine cooling system in air-conditioned vehicles must be protected with a high-quality antifreeze coolant to provide proper corrosion protection and to protect against engine overheating. A 50% solution of ethylene glycol antifreeze coolant in water is recommended. Refer to “Maintenance Procedures” in Section 7 for proper coolant selection.

Winter Operation
Use of the air Recirculation mode during Winter months is not recommended because it may cause window fogging.

Vacation Storage
Any time you store your vehicle or keep it out of service (i.e., vacation) for two weeks or more, run the air conditioning system at idle for about five minutes in the fresh air and high blower setting. This will insure adequate system lubrication to minimize the possibility of compressor damage when the system is started again.

Window Fogging
Interior fogging on the windshield can be quickly removed by turning the mode selector to Defrost. The Defrost/Floor mode can be used to maintain a clear windshield and provide sufficient heating. If side window fogging becomes a problem increase blower speed. Vehicle windows tend to fog on the inside in mild but rainy or humid weather.

NOTE: Recirculate without A/C should not be used for long periods, as fogging may occur.

Outside Air Intake
Make sure the air intake, located directly in front of the windshield, is free of obstructions such as leaves. Leaves collected in the air intake may reduce airflow, and if they enter the plenum, they could plug the water drains. In Winter months, make sure the air intake is clear of ice, slush, and snow.

A/C Air Filter
The climate control system filters outside air containing dust, pollen and some odors. Strong odors cannot be totally filtered out. Refer to “Maintenance Procedures” in Section 7 for filter replacement instructions.

Control Setting Suggestions for Various Weather Conditions

WEATHER	CONTROL SETTINGS
HOT WEATHER AND VEHICLE INTERIOR IS VERY HOT	Open the windows, start the vehicle, set the Mode control to Panel or Bi-Level, and turn on A/C. Set the Fan control to the High position (full clockwise). Set the temperature control to full cool. After the hot air is flushed from the vehicle, set the Mode control to Recirculate with A/C on and roll up the windows. Once you are comfortable, set the Mode control to Panel or Bi-Level with A/C on.
WARM WEATHER	If it's sunny, set the Mode control to Panel and turn on A/C. If it's cloudy or dark, set the Mode control to Bi-Level with A/C on. Adjust Temperature control for comfort.
COOL OR COLD HUMID CONDITIONS	Set the Mode control to Defrost/Floor or Defrost. Set the Fan Control to the High position (full clockwise). Adjust Fan and Temperature control for comfort if windows are clear.
COLD DRY CONDITIONS	Set the Mode control to Floor. If it's sunny, you may want more upper air. In this case, set the Mode control to Bi-Level. In very cold weather, if you need extra heat at the windshield, set the Mode control to Defrost/Floor or Defrost as needed. Adjust Fan and Temperature control for comfort.

81352266

4

STARTING AND OPERATING

CONTENTS

■ Starting Procedures 269
- □ Automatic Transmission 269
- □ Normal Starting (Tip Start) 270

■ Engine Block Heater — If Equipped 272

■ Automatic Transmission 273
- □ General Information 273
- □ Brake/Transmission Shift Interlock System . . 275
- □ Brake/Transmission Interlock Manual Override 275
- □ 4-Speed Automatic Transmission 276
- □ 5-Speed Automatic Transmission 282

■ AutoStick® — If Equipped 286
- □ AutoStick® Operation 286

■ All-Wheel Drive (AWD) — If Equipped 286

■ Driving On Slippery Surfaces 287
- □ Acceleration 287
- □ Traction 288

■ Driving Through Water 288
□ Flowing/Rising Water 289
□ Shallow Standing Water 289
■ Power Steering 291
□ Power Steering Fluid Check 291
■ Parking Brake 292
■ Anti-Lock Brake System 294
■ Electronic Brake Control System 296
□ ABS (Anti-Lock Brake System) 296
□ TCS (Traction Control System) 297
□ BAS (Brake Assist System) 297
□ ESP (Electronic Stability Program) 298
□ Synchronizing ESP 300
□ ESP/BAS Malfunction Indicator Light And ESP/TCS Indicator Light 300
■ Tire Safety Information 301
□ Tire Markings 301
□ Tire Identification Number (TIN) 305
□ Tire Loading And Tire Pressure 306
■ Tires — General Information 310
□ Tire Pressure 310
□ Tire Inflation Pressures 311
□ Tire Pressures For High Speed Operation . . . 312
□ Radial Ply Tires 313
□ Compact Spare Tire — If Equipped 313
□ Limited-Use Spare — If Equipped 314

- Tire Spinning 315
- Tread Wear Indicators 316
- Life Of Tire 316
- Replacement Tires 317

■ Self-Sealing Tires — If Equipped 318

■ Tire Chains 319

■ Snow Tires 320

■ Tire Rotation Recommendations 321

■ Tire Pressure Monitor System (TPMS) 322

- Base System 324
- Premium System — If Equipped 327
- General Information 332

■ Fuel Requirements 332

- 2.7L Engine 332
- 3.5L And 5.7L Engines 332
- Reformulated Gasoline 333
- Gasoline/Oxygenate Blends 333
- E-85 Usage In Non-Flex Fuel Vehicles 334
- MMT In Gasoline 335
- Materials Added To Fuel 335
- Fuel System Cautions 335
- Carbon Monoxide Warnings 336

■ Adding Fuel 337

- Fuel Filler Cap (Gas Cap) 337
- Loose Fuel Filler Cap Message 339

■ Vehicle Loading 340
□ Vehicle Certification Label 340
□ Gross Vehicle Weight Rating (GVWR) 340
□ Gross Axle Weight Rating (GAWR) 340
□ Overloading 341
□ Loading 341
■ Trailer Towing 342
□ Common Towing Definitions 342
□ Trailer Hitch Classification 344
□ Trailer Towing Weights (Maximum Trailer Weight Ratings) 346
□ Trailer And Tongue Weight 347
□ Towing Requirements 348
□ Towing Tips 353
■ Recreational Towing (Behind Motorhome, Etc.) 354
□ Two-Wheel Drive And All-Wheel Drive 354

STARTING PROCEDURES

Before starting your vehicle, adjust your seat, adjust the inside and outside mirrors, fasten your seat belt, and if present, instruct all other occupants to buckle their seat belts.

WARNING!

- **Never leave children alone in a vehicle. Leaving unattended children in a vehicle is dangerous for a number of reasons. A child or others could be seriously or fatally injured. Do not leave the key in the ignition. A child could operate power windows, other controls, or move the vehicle.**
- **Do not leave animals or children inside parked vehicles in hot weather; interior heat buildup may cause serious injury or death.**

(Continued)

WARNING! (Continued)

- **Be sure to turn OFF the engine and remove the key from the ignition switch if you want to rest or sleep in your car. Accidents can be caused by inadvertently moving the shift lever. Accidents can also be caused by pressing the accelerator pedal. This may cause excessive heat in the exhaust system, resulting in overheating and vehicle fire, which may cause serious or fatal injuries.**

Automatic Transmission

The shift lever must be in the NEUTRAL or PARK position before you can start the engine. Apply the brakes before shifting into any driving gear.

CAUTION!

Damage to the transmission may occur if the following precautions are not observed:

- **Shift into PARK only after the vehicle has come to a complete stop.**
- **Shift into or out of REVERSE only after the vehicle has come to a complete stop and the engine is at idle speed.**
- **Do not shift from REVERSE, PARK, or NEUTRAL into any forward gear when the engine is above idle speed.**
- **Before shifting into any gear, make sure your foot is firmly on the brake pedal.**

Normal Starting (Tip Start)

NOTE: Normal Starting of either a cold or a warm engine is obtained without pumping or depressing the accelerator pedal.

Do not press the accelerator. Use the Fob with Integrated Key to briefly turn the ignition switch to the START position and release it as soon as the starter engages. The starter motor will continue to run, and it will disengage automatically when the engine is running. If the engine fails to start, the starter will disengage automatically in 10 seconds. If this occurs, turn the ignition switch to the LOCK position, wait 10 to 15 seconds, then repeat the normal starting procedure.

Extremely Cold Weather (Below −20°F or −29°C)
To ensure reliable starting at these temperatures, use of an externally powered electric engine block heater (available from your authorized dealer) is recommended.

If Engine Fails To Start

WARNING!

- **Never pour fuel or other flammable liquids into the throttle body air inlet opening in an attempt to start the vehicle. This could result in a flash fire causing serious personal injury.**

(Continued)

WARNING! (Continued)

- **Do not attempt to push or tow your vehicle to get it started. Vehicles equipped with an automatic transmission cannot be started this way. Unburned fuel could enter the catalytic converter and once the engine has started, ignite and damage the converter and vehicle. If the vehicle has a discharged battery, booster cables may be used to obtain a start from a booster battery or the battery in another vehicle. This type of start can be dangerous if done improperly. Refer to Section 6 for proper jump-starting procedures and follow them carefully.**

If the engine fails to start after you have followed the "Normal Starting" or "Extreme Cold Weather" procedures, it may be flooded. To clear any excess fuel, push the accelerator pedal all the way to the floor and hold it. Then, turn the ignition switch to the START position and

release it as soon as the starter engages. The starter motor will disengage automatically in 10 seconds. Once this occurs, release the accelerator pedal, turn the ignition switch to the LOCK position, wait 10 to 15 seconds, then repeat the normal starting procedure.

CAUTION!

To prevent damage to the starter, wait 10 to 15 seconds before trying again.

After Starting

The idle speed is controlled automatically and it will decrease as the engine warms up.

ENGINE BLOCK HEATER — IF EQUIPPED

The engine block heater warms the engine, and permits quicker starts in cold weather. Connect the cord to a standard 110-115 Volt AC electrical outlet with a grounded, three-wire extension cord.

The engine block heater cord is routed under the hood on the driver side of the vehicle. It has a removable cap that is located on the driver side of the Integrated Power Module.

WARNING!

Remember to disconnect the cord before driving. Damage to the 110-115 Volt electrical cord could cause electrocution.

AUTOMATIC TRANSMISSION

CAUTION!

Damage to the transmission may occur if the following precautions are not observed:

- **Shift into PARK only after the vehicle has come to a complete stop.**
- **Shift into or out of REVERSE only after the vehicle has come to a complete stop and the engine is at idle speed.**
- **Do not shift from REVERSE, PARK, or NEUTRAL into any forward gear when the engine is above idle speed.**
- **Before shifting into any gear, make sure your foot is firmly on the brake pedal.**

WARNING!

It is dangerous to move the shift lever out of PARK or NEUTRAL if the engine speed is higher than idle speed. If your foot is not firmly on the brake pedal, the vehicle could accelerate quickly forward or in reverse. You could lose control of the vehicle and hit someone or something. Only shift into gear when the engine is idling normally and when your right foot is firmly on the brake pedal.

General Information

The automatic transmission selects individual gears automatically, dependent upon:

- Altitude
- Vehicle loading
- Driving style

- Shift lever position
- Accelerator position
- Vehicle speed

The gear shifting process is continuously adapted, dependent on the driving style, the driving situation, and the road characteristics.

NOTE:

- After selecting any driving position, wait a moment to allow the gear to engage fully before accelerating, especially when the engine is cold.
- If there is a need to restart the engine, be sure to cycle the key to the LOCK position before restarting. Transmission engagement may be delayed up to 10 seconds after restart if the key is not cycled to the LOCK position first.
- The electronically-controlled transmission provides a precise shift schedule. The transmission electronics are self-calibrating. Therefore, the first few shifts on a new vehicle may be somewhat abrupt or soft until after the break-in period. This is a normal condition, and precision shifts will develop within a few shift cycles.

The shift lever is automatically locked while in the PARK position. To move the shift lever out of the PARK position, the brake pedal must be firmly depressed before the shift lock will release.

Move the shift lever to the desired position only when the engine is idling normally and the brake pedal is applied. Do not release the brake pedal until ready to drive. The vehicle may otherwise accelerate quickly when the shift lever is in DRIVE or REVERSE position.

WARNING!

Unintended movement of a vehicle could injure those in and near the vehicle. As with all vehicles, you should never exit a vehicle while the engine is running. Before exiting a vehicle, you should always shift the transmission into PARK, remove the key from the ignition, and apply the parking brake. Once the key is removed from the ignition, the transmission shift lever is locked in the PARK position, securing the vehicle against unwanted movement. Furthermore, you should never leave unattended children inside a vehicle.

Over-Temperature Mode

The transmission electronics constantly monitor the transmission oil temperature. If the transmission exceeds normal operating temperature, the transmission will change the way it shifts to help control the condition. This may result in a slightly different feeling or response during normal operation in DRIVE position. After the transmission cools down, it will return to normal operation.

Brake/Transmission Shift Interlock System

This vehicle is equipped with a Brake Transmission Shift Interlock System (BTSI) that holds the shift lever in the PARK position when the ignition switch is in the LOCK position. To move the shift lever out of the PARK position, the ignition switch must be turned to the ON/RUN position, and the brake pedal must be depressed.

Brake/Transmission Interlock Manual Override

There is an override for the BTSI that allows you to move the shift lever out of the PARK position if an electrical system malfunction occurs (i.e., dead battery). To access the override, remove the rubber tray from the storage bin

located to the right of the shift lever. The override access port is at the top of the bin to the right of the shift lever gate.

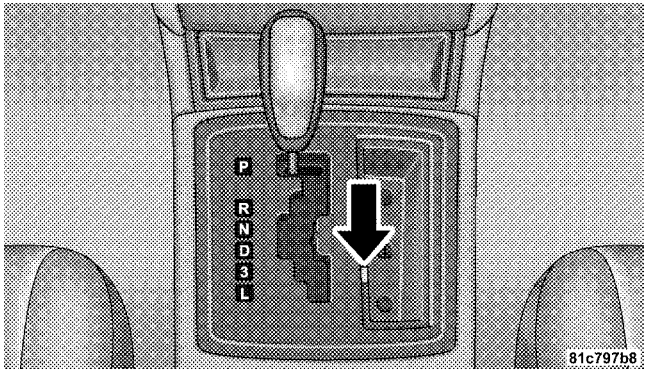

Interlock Manual Override

To activate the override, first insert the key into the ignition switch and turn it to the ON position. Then, press the pink-colored tab through the access port with a small flat blade screwdriver or alike. While pressing the override, move the shift lever out of the PARK position. When complete, return the rubber tray to its original position.

4-Speed Automatic Transmission

NOTE: Under extreme cold temperatures (-6°F (-21°C) and when in DRIVE, transmission operation may be briefly limited to only 2nd gear operation. Normal operation will resume once the transmission temperature has risen to a suitable level.

Shifting from DRIVE to PARK or REVERSE should be done only after the accelerator pedal is released and the vehicle is stopped. Be sure to keep your foot on the brake pedal when moving the shift lever between these gears.

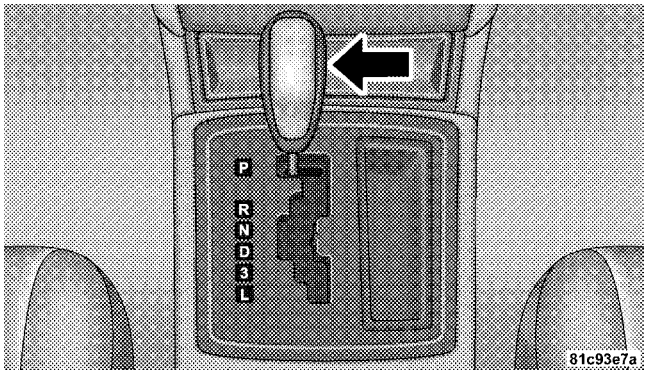

Shift Lever

Gear Ranges

PARK

PARK supplements the parking brake by locking the transmission. The engine can be started in this range. Never use PARK while the vehicle is in motion. Apply the parking brake when leaving the vehicle in this range.

When parking on a flat surface, place the shift lever in the PARK position first, and then apply the parking brake.

When parking on a hill, it is important to set the parking brake before placing the shift lever in PARK, otherwise the load on the transmission locking mechanism may make it difficult to move the shift lever out of park. As an added precaution, turn the front wheels toward the curb on a downhill grade and away from the curb on an uphill grade.

WARNING!

Never use PARK position on an automatic transmission as a substitute for the parking brake. Always apply the parking brake fully when parked to guard against vehicle movement and possible injury or damage.

The following indicators should be used to ensure that you have engaged the shift lever in the PARK position:

- When shifting into PARK move the shift lever all the way forward and left until it stops and is fully seated.
- Look at the shift indicator display on the instrument panel to ensure it is in the P position.

CAUTION!

Damage to the shifter could result if the shift lever is moved out of PARK before the ignition is turned from the LOCK to ON position.

REVERSE

Use REVERSE for moving the vehicle rearward. Always stop before moving the shift lever to REVERSE.

NEUTRAL

The engine may be started in this range.

CAUTION!

Coasting the vehicle or driving for any other reason with shift lever in NEUTRAL can result in transmission damage.

WARNING!

Do not coast in NEUTRAL and never turn off the ignition to coast down a hill. These are unsafe practices that limit your response to changing traffic or road conditions. You might lose control of the vehicle and have an accident.

"D" (Overdrive)

This range should be used for most city and highway driving. It provides the smoothest up shifts and down

shifts and the best fuel economy. Select the "3" range when frequent transmission shifting occurs when using the Overdrive range, such as when operating the vehicle under heavy loading conditions (in hilly terrain, traveling into strong head winds, or while towing heavy trailers).

NOTE:

- If the vehicle is started in cold temperatures, shifts into Overdrive may be delayed. Normal Overdrive and shifting operation will resume when the temperature of the transmission reaches the appropriate temperature. Refer to the Note under "Torque Converter Clutch" later in this section.
- If the transmission temperature gets too hot, the transmission may downshift out of Overdrive or engage Overdrive at higher vehicle speeds until the transmission cools down. After cooldown, Overdrive will resume normal operation.

"3" (Third)

This range eliminates shifts into Overdrive. The transmission will operate normally in 1st, 2nd, and 3rd while in this range. The "3" position should also be used when descending steep grades to prevent brake system distress.

NOTE: Using the "3" range while operating the vehicle under heavy operating conditions will improve performance and extend transmission life by reducing excessive shifting and heat buildup.

"L" (Low)

This range should be used for engine braking when descending very steep grades. In this range, upshifts will occur only to prevent engine overspeed while downshifts occur earlier than in other gear range selections.

CAUTION!

Never race the engine with the brakes on and the vehicle in gear, and never hold the vehicle on an incline without applying the brakes. These practices can cause overheating and damage to the transmission.

Torque Converter Clutch

A feature designed to improve fuel economy has been added to the automatic transmission in this vehicle. A clutch within the torque converter engages automatically at calibrated speeds. This may result in a slightly different feeling or response during normal operation in high gear. When the vehicle speed drops or during acceleration, the clutch automatically and smoothly disengages.

NOTE:

- The torque converter clutch will not engage until the transmission fluid and engine coolant is warm (usually after 1–3 miles [1.6–4.8 km] of driving). Because engine speed is higher when the torque converter clutch is not engaged, it may seem as if the transmission is not shifting into Overdrive when cold. This is considered a normal condition. Pulling the shift lever into the “3” position will show that the transmission is able to shift into and out of Overdrive.

- If the vehicle has not been driven for several days, the first few seconds of operation after shifting the transmission into gear may seem sluggish. This is due to the transmission fluid partially draining from the torque converter into the transmission. This is considered a normal condition and it will not cause damage to the transmission. The torque converter will refill within five seconds of shifting from PARK into any other gear position.

Transmission Limp Home Mode

The transmission is monitored for abnormal conditions. If a condition is detected that could cause damage, the transmission automatically shifts into second gear. The transmission remains in second gear despite the forward gear selected. PARK, REVERSE, and NEUTRAL will continue to operate. This reset feature allows the vehicle to be driven to an authorized dealer for service without damaging the transmission.

If the problem has been momentary, the transmission can be reset to regain all forward gears.

- Stop the vehicle and shift into PARK.
- Turn the key to LOCK, then start the engine.
- Shift into DRIVE and resume driving.

NOTE: Even if the transmission can be reset, we recommend that you visit an authorized dealer at your earliest possible convenience. Your authorized dealer has diagnostic equipment to determine if the problem could recur.

If the transmission cannot be reset, authorized dealer service is required.

5-Speed Automatic Transmission

Shifting from DRIVE to PARK or REVERSE should be done only after the accelerator pedal is released and the vehicle is stopped. Be sure to keep your foot on the brake pedal when moving the shift lever between these gears.

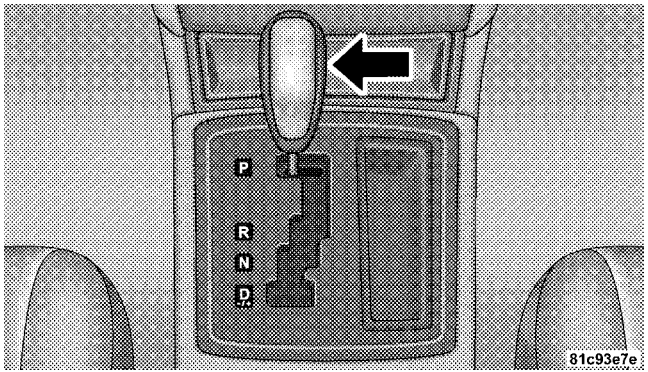

Shift Lever

Gear Ranges

PARK

PARK supplements the parking brake by locking the transmission. The engine can be started in this range. Never use PARK while the vehicle is in motion. Apply the parking brake when leaving the vehicle in this range.

When parking on a flat surface, place the shift lever in the PARK position first, and then apply the parking brake.

When parking on a hill, it is important to set the parking brake before placing the shift lever in PARK, otherwise the load on the transmission locking mechanism may make it difficult to move the shift lever out of PARK. As an added precaution, turn the front wheels toward the curb on a downhill grade and away from the curb on an uphill grade.

WARNING!

Never use PARK position on an automatic transmission as a substitute for the parking brake. Always apply parking brake fully when parked to guard against vehicle movement and possible injury or damage.

The following indicators should be used to ensure that you have engaged the shift lever in the PARK position:

- When shifting into PARK, move the shift lever all the way forward and left until it stops and is fully seated.
- Look at the shift indicator display on the instrument panel to ensure it is in the P position.

CAUTION!

Damage to the shifter could result if the shift lever is moved out of PARK before the ignition is turned from the LOCK to ON position.

REVERSE

Shift into REVERSE gear only when the vehicle is completely stopped.

NEUTRAL

In NEUTRAL, no power is transmitted from the engine to the drive axle. When the brakes are released, the vehicle can be moved freely (pushed or towed). Do not engage NEUTRAL position while driving except to coast when the vehicle is in danger of skidding (e.g., on icy roads).

The engine may be started in this range. Use this range for starting your vehicle if it is moving or being towed.

CAUTION!

Coasting the vehicle or driving for any other reason with the shift lever in NEUTRAL can result in transmission damage.

WARNING!

Do not coast in NEUTRAL and never turn off the ignition to coast down a hill. These are unsafe practices that limit your response to changing traffic or road conditions. You might lose control of the vehicle and have an accident.

DRIVE

This range should be used for most city and highway driving. It provides the smoothest upshifts and downshifts and the best fuel economy.

The transmission automatically upshifts through 5th gear. The DRIVE position provides optimum driving characteristics under all normal operating conditions.

When frequent transmission shifting occurs when using the Overdrive range, such as when operating the vehicle under heavy loading conditions (in hilly terrain, traveling into strong head winds, or while towing heavy trailers, use the AutoStick® mode and select the "3" range.

Delayed Shifts in Cold Temperatures

During cold temperature operation, you may notice delayed upshifts depending on engine and transmission temperature as well as vehicle speed. This feature improves warm up time of the engine and transmission to achieve maximum efficiency.

Temporary Transmission Limp Home Mode

The transmission is monitored for abnormal conditions. If a condition is detected that could result in transmission damage, the transmission will engage Limp Home Mode. If vehicle acceleration worsens, or the transmission no longer shifts, the transmission is most likely operating in the Limp Home Mode. In this mode, the transmission will remain in the current gear until the vehicle is brought to a stop. After the vehicle has stopped, PARK, REVERSE, and NEUTRAL will continue to operate. Second gear will operate in the DRIVE position. The Malfunction Indicator Light (MIL) may be illuminated.

A reset feature is available to allow the vehicle to be driven to an authorized dealer for service. To reset the transmission, use the following procedure:

1. Stop the vehicle.
2. Move the shift lever to the PARK position.
3. Turn OFF the engine.
4. Wait approximately 10 seconds.
5. Restart the engine.
6. Move the shift lever to the desired range. If the problem is no longer detected, the transmission will return to normal operation.

NOTE: Even if the transmission can be reset, we recommend that you visit your authorized dealer at your earliest possible convenience. Your authorized dealer has diagnostic equipment to determine if the problem could recur.

Have the transmission checked at your authorized dealer as soon as possible.

If the problem has been momentary, the transmission can be reset to regain all forward gears.

AUTOSTICK® — IF EQUIPPED

Autostick® is a driver-interactive transmission that offers manual gear shifting to provide you with more control of the vehicle. Autostick® allows you to maximize engine braking, eliminate undesirable upshifts and downshifts, and improve overall vehicle performance. This system can also provide you with more control during passing, city driving, cold slippery conditions, mountain driving, trailer towing, and many other situations.

Autostick® Operation

By placing the shift lever in the DRIVE position, it can be moved from side to side. This allows the driver to select a higher or lower range of gears. Moving the shift lever to the left (-) triggers a downshift and to the right (+) an upshift. The gear position will display in the instrument cluster on the transmission range indicator.

You can shift in or out of the Autostick® mode at any time without taking your foot off the accelerator pedal. If you choose the Overdrive mode, the transmission will operate automatically, shifting between the five available gears. When you wish to engage Autostick®, simply move the shift lever to the right or left (D+/D-) while in the DRIVE position. The transmission will remain in the current gear until an upshift or downshift is chosen.

ALL-WHEEL DRIVE (AWD) — IF EQUIPPED

This vehicle is equipped with an active on-demand All Wheel Drive (AWD) system which makes available optimum traction for a wide variety of road surface and driving conditions. The system minimizes wheel slip by automatically redirecting torque to the front and rear wheels as necessary.

To maximize fuel economy, your AWD vehicle automatically defaults to Rear Wheel Drive (RWD) when road and environmental conditions are such that wheel slip is unlikely to occur. When specific road and environmental conditions require increased levels of road traction, the

vehicle automatically shifts into AWD mode. Automatic AWD operation could be activated by outside temperature, wheel slip, or other predetermined conditions (there may be a slight delay for AWD engagement after a wheel slip condition occurs). AWD can also be manually selected by moving the shift lever into the Autostick® mode (+/-) or activating the windshield wipers for an extended period of time.

NOTE: If the "t CASE" or "SERVICE AWD SYSTEM" warning message appears after engine start up, or during driving, it means that the AWD system is not functioning properly and that service is required. Refer to "Electronic Vehicle Information Center" in Section 4 of this manual.

CAUTION!

All wheels must have the same size and type tires. Unequal tire sizes must not be used. Unequal tire size may cause failure of the front differential and/or the transfer case.

DRIVING ON SLIPPERY SURFACES

Acceleration

Rapid acceleration on snow covered, wet, or other slippery surfaces may cause the rear wheels to pull erratically to the right or left. This phenomenon occurs when there is a difference in the surface traction under the rear (driving) wheels.

WARNING!

Rapid acceleration on slippery surfaces is dangerous. Unequal traction can cause sudden pulling of the rear wheels. You could lose control of the vehicle and possibly have an accident. Accelerate slowly and carefully whenever there is likely to be poor traction (ice, snow, wet mud, loose sand, etc.).

Traction

When driving on wet or slushy roads, it is possible for a wedge of water to build up between the tire and road surface. This is known as hydroplaning and may cause partial or complete loss of vehicle control and stopping ability. To reduce this possibility, the following precautions should be observed:

1. Slow down during rainstorms or when the roads are slushy.

2. Slow down if the road has standing water or puddles.

3. Replace tires when tread wear indicators first become visible.

4. Keep tires properly inflated.

5. Maintain sufficient distance between your vehicle and the vehicle in front of you to avoid a collision in a sudden stop.

DRIVING THROUGH WATER

Driving through water more than a few inches/centimeters deep will require extra caution to ensure safety and prevent damage to your vehicle.

Flowing/Rising Water

WARNING!

Do not drive on or cross a road or a path where water is flowing and/or rising (as in storm run-off). Flowing water can wear away the road or path's surface and cause your vehicle to sink into deeper water. Furthermore, flowing and/or rising water can carry your vehicle away swiftly. Failure to follow this warning may result in injuries that are serious or fatal to you, your passengers, and others around you.

Shallow Standing Water

Although your vehicle is capable of driving through shallow standing water, consider the following Caution and Warning before doing so.

CAUTION!

- **Always check the depth of the standing water before driving through it. Never drive through standing water that is deeper than the bottom of the tire rims mounted on the vehicle.**
- **Determine the condition of the road or the path that is under water and if there are any obstacles in the way before driving through the standing water.**
- **Do not exceed 5 mph (8 km/h) when driving through standing water. This will minimize wave effects.**

(Continued)

CAUTION! (Continued)

- **Driving through standing water may cause damage to your vehicle's drivetrain components. Always inspect your vehicle's fluids (i.e., engine oil, transmission/transaxle, axle, etc.) for signs of contamination (i.e., fluid that is milky or foamy in appearance) after driving through standing water. Do not continue to operate the vehicle if any fluid appears contaminated, as this may result in further damage. Such damage is not covered by the New Vehicle Limited Warranty.**
- **Getting water inside your vehicle's engine can cause it to lock up and stall out, and cause serious internal damage to the engine. Such damage is not covered by the New Vehicle Limited Warranty.**

WARNING!

- **Driving through standing water limits your vehicle's traction capabilities. Do not exceed 5 mph (8 km/h) when driving through standing water.**
- **Driving through standing water limits your vehicle's braking capabilities, which increases stopping distances. Therefore, after driving through standing water, drive slowly and lightly press on the brake pedal several times to dry the brakes.**
- **Getting water inside your vehicle's engine can cause it to lock up and stall out, and leave you stranded.**
- **Failure to follow these warnings may result in injuries that are serious or fatal to you, your passengers, and others around you.**

POWER STEERING

The standard power steering system will give you good vehicle response and increased ease of maneuverability in tight spaces. The system will provide mechanical steering capability if power assist is lost.

If for some reason the power assist is interrupted, it will still be possible to steer your vehicle. Under these conditions, you will observe a substantial increase in steering effort, especially at very low vehicle speeds and during parking maneuvers.

NOTE: Increased noise levels at the end of the steering wheel travel are considered normal and do not indicate that there is a problem with the power steering system.

Upon initial start-up in cold weather, the power steering pump may make noise for a short amount of time. This is due to the cold, thick fluid in the steering system. This noise should be considered normal, and it does not in any way damage the steering system.

WARNING!

Continued operation with reduced power steering assist could pose a safety risk to yourself and others. Service should be obtained as soon as possible.

CAUTION!

Prolonged operation of the steering system at the end of the steering wheel travel will increase the steering fluid temperature and it should be avoided when possible. Damage to the power steering pump may occur.

Power Steering Fluid Check

Checking the power steering fluid level at a defined service interval is not required. The fluid should only be checked if a leak is suspected, abnormal noises are

apparent, and/or the system is not functioning as anticipated. Coordinate inspection efforts through an authorized dealer.

No chemical flushes should be used in any power steering system; only the approved lubricant may be used.

WARNING!

Fluid level should be checked on a level surface and with the engine off to prevent injury from moving parts and to ensure accurate fluid level reading. Do not overfill. Use only manufacturer's recommended power steering fluid.

If necessary, add fluid to restore to the proper indicated level. With a clean cloth, wipe any spilled fluid from all surfaces. Refer to "Fluids, Lubricants, and Genuine Parts" in Section 7 for the correct fluid type.

PARKING BRAKE

The parking brake should always be applied when the driver is not in the vehicle.

WARNING!

Never use the PARK position as a substitute for the parking brake. Always apply the parking brake fully when parked to guard against vehicle movement and possible injury or damage.

When parking on a flat surface, place the shift lever in the PARK position first and then apply the parking brake.

When parking on a hill, it is important to apply the parking brake before placing the shift lever in PARK, otherwise the load on the transmission locking mechanism may make it difficult to move the shift lever out of

PARK. As an added precaution, turn the front wheels toward the curb on a downhill grade and away from the curb on an uphill grade.

The foot operated parking brake is positioned below the lower left corner of the instrument panel. To apply the parking brake, push the parking brake pedal down and then remove your foot from the pedal. To release the parking brake, push down on the parking brake pedal and then release.

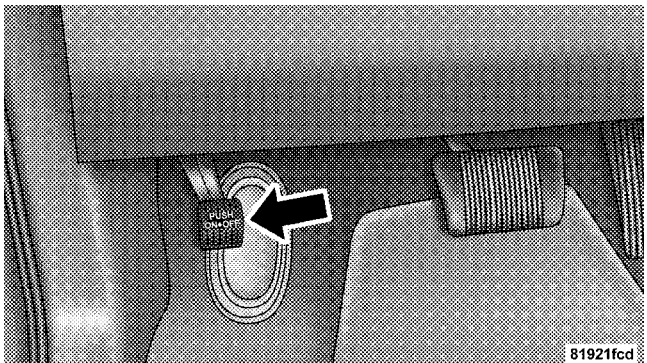

Parking Brake

The BRAKE light in the instrument cluster will turn on when the parking brake is applied and the ignition switch is ON.

NOTE: This light only shows that the parking brake is applied. It does not show the degree of brake application.

WARNING!

- **Never leave children alone in a vehicle. Leaving unattended children in a vehicle is dangerous for a number of reasons. A child or others could be seriously or fatally injured. Do not leave the key in the ignition. A child could operate power windows, other controls, or move the vehicle.**
- **Be sure the parking brake is fully disengaged before driving; failure to do so can lead to brake failure and an accident.**

ANTI-LOCK BRAKE SYSTEM

The Anti-Lock Brake System (ABS) provides increased vehicle stability and brake performance under most braking conditions. The system automatically "pumps" the brakes during severe braking conditions to prevent wheel lock-up.

The Electronic Brake Force Distribution (EBD) prevents the rear wheels from over-braking and provides greater control of available braking forces applied to the rear axle.

When the vehicle is driven over 7 mph (11 km/h), you may also hear a slight clicking sound as well as some related motor noises. These noises are the system performing its self check cycle to ensure that the ABS is working properly. This self check occurs each time the vehicle is started and accelerated past 7 mph (11 km/h).

ABS is activated during braking under certain road or stopping conditions. ABS-inducing conditions can include ice, snow, gravel, bumps, railroad tracks, loose debris, or panic stops.

You also may experience the following when the brake system goes into Anti-Lock:

- The ABS motor running (it may continue to run for a short time after the stop),
- The clicking sound of solenoid valves,
- Brake pedal pulsations, and
- A slight drop or fall away of the brake pedal at the end of the stop.

These are all normal characteristics of ABS.

WARNING!

- **The ABS contains sophisticated electronic equipment that may be susceptible to interference caused by improperly installed or high output radio transmitting equipment. This interference can cause possible loss of anti-lock braking capability. Installation of such equipment should be performed by qualified professionals.**
- **Pumping of the Anti-Lock Brakes will diminish their effectiveness and may lead to an accident. Pumping makes the stopping distance longer. Just press firmly on your brake pedal when you need to slow down or stop.**

(Continued)

WARNING! (Continued)

- **The ABS cannot prevent the natural laws of physics from acting on the vehicle, nor can it increase braking or steering efficiency beyond that afforded by the condition of the vehicle brakes and tires or the traction afforded.**
- **The ABS cannot prevent accidents, including those resulting from excessive speed in turns, following another vehicle too closely, or hydroplaning. Only a safe, attentive, and skillful driver can prevent accidents.**
- **The capabilities of an ABS equipped vehicle must never be exploited in a reckless or dangerous manner that could jeopardize the user's safety or the safety of others.**

All vehicle wheels and tires must be the same size and type and tires must be properly inflated to produce accurate signals for the computer.

ELECTRONIC BRAKE CONTROL SYSTEM

Your vehicle is equipped with an advanced electronic brake control system that include ABS (Anti-Lock Brake System), TCS (Traction Control System), BAS (Brake Assist System), and ESP (Electronic Stability Program). All four of these systems work together to enhance vehicle stability and control in various driving conditions.

ABS (Anti-Lock Brake System)

This system aids the driver in maintaining vehicle control under adverse braking conditions by controlling hydraulic brake pressure. This prevents wheel lock-up to help avoid skidding on slippery surfaces during braking. Refer to "Anti-Lock Brake System" in Section 5 of this manual.

WARNING!

The ABS cannot prevent the natural laws of physics from acting on the vehicle, nor can it increase the traction afforded by prevailing road conditions. The ABS cannot prevent accidents, including those resulting from excessive speed in turns, driving on very slippery surfaces, or hydroplaning. Only a safe, attentive, and skillful driver can prevent accidents. The capabilities of an ABS-equipped vehicle must never be exploited in a reckless or dangerous manner that could jeopardize the user's safety or the safety of others.

TCS (Traction Control System)

This system monitors the amount of wheel spin of each driven wheel. If wheel spin is detected, brake pressure is applied to the slipping wheel(s) and engine power is reduced to provide enhanced acceleration and stability.

BAS (Brake Assist System)

This system complements the ABS by optimizing the vehicle braking capability during emergency brake maneuvers. This system detects an emergency braking situation by sensing the rate and amount of brake application and then applies optimum pressure to the brakes. This can help reduce braking distances.

Applying the brakes very quickly results in the best BAS assistance. To receive the benefits of this system, you must apply continuous brake pedal pressure during the stopping sequence. Do not reduce brake pedal pressure unless braking is no longer desired. Once the brake pedal is released, the BAS is deactivated.

WARNING!

The BAS cannot prevent the natural laws of physics from acting on the vehicle, nor can it increase the traction afforded by prevailing road conditions. The BAS cannot prevent accidents, including those resulting from excessive speed in turns, driving on very slippery surfaces, or hydroplaning. Only a safe, attentive, and skillful driver can prevent accidents. The capabilities of a BAS-equipped vehicle must never be exploited in a reckless or dangerous manner that could jeopardize the user's safety or the safety of others.

ESP (Electronic Stability Program)

This system enhances directional control and stability of the vehicle under various driving conditions. The ESP corrects for oversteering and understeering the vehicle by applying the brake of the appropriate wheel. Engine power may also be reduced to assist in counteracting the condition of oversteer or understeer and help the vehicle maintain the desired path.

The ESP uses sensors in the vehicle to determine the path that the driver intends to steer the vehicle and compares it to the actual path of the vehicle. When the actual path does not match the intended path, the ESP applies the brake of the appropriate wheel to assist in counteracting the condition of oversteer or understeer.

- Oversteer - when the vehicle is turning more than appropriate for the steering wheel position.
- Understeer - when the vehicle is turning less than appropriate for the steering wheel position.

The ESP/TCS Indicator Light located in the instrument cluster, starts to flash as soon as the tires lose traction and the ESP system becomes active. The ESP/TCS Indicator Light also

flashes when the TCS is active. If the ESP/TCS Indicator Light begins to flash during acceleration, ease up on the accelerator and apply as little throttle as possible. Be sure to adapt your speed and driving to the prevailing road conditions.

WARNING!

The ESP cannot prevent the natural laws of physics from acting on the vehicle, nor can it increase the traction afforded by prevailing road conditions. The ESP cannot prevent accidents, including those resulting from excessive speed in turns, driving on very slippery surfaces, or hydroplaning. Only a safe, attentive, and skillful driver can prevent accidents. The capabilities of an ESP-equipped vehicle must never be exploited in a reckless or dangerous manner that could jeopardize the user's safety or the safety of others.

The ESP system has two available operating modes:

ESP On

This is the normal operating mode for the ESP. Whenever the vehicle is started, the ESP system will be in this mode. This mode should be used for most driving conditions. The ESP should only be turned OFF for specific reasons as noted in the following paragraphs.

Partial Off

The "Partial Off" mode is intended for times when a more spirited driving experience is desired. It is also intended for driving in deep snow, sand, or gravel. This mode disables the TCS portion of the ESP and raises the threshold for ESP activation, which allows for more wheel spin than what ESP normally allows.

The ESP OFF switch is located on the switch bank in the center of the instrument panel. To enter the "Partial Off" mode, momentarily depress the ESP OFF switch and the "ESP/TCS Indicator Light" will illuminate. To turn the

ESP on again, momentarily depress the ESP OFF switch and the "ESP/TCS Indicator Light" will turn off.

NOTE: To improve the vehicle's traction when driving with snow chains, or when starting off in deep snow, sand, or gravel, it may be desirable to switch to the "Partial Off" mode by momentarily depressing the ESP OFF switch. Once the situation requiring "Partial Off" mode is overcome, turn the ESP on again by momentarily depressing the ESP OFF switch. This may be done while the vehicle is in motion.

Synchronizing ESP

ESP
BAS

The Malfunction Indicator Light for the ESP is combined with BAS indicator. If the power supply is interrupted (battery disconnected or discharged), the ESP/BAS Malfunction Indicator Light may illuminate with the engine running. If this should occur, turn the steering wheel completely to the left and then to the right. The ESP/BAS Malfunction Indicator Light should go out. However, if the light remains on, have the ESP and BAS checked at your authorized dealer as soon as possible.

ESP/BAS Malfunction Indicator Light and ESP/TCS Indicator Light

ESP
BAS

The Malfunction Indicator Light for the ESP is combined with the BAS indicator. The ESP/BAS Malfunction Indicator Light and the ESP/TCS Indicator Light in the instrument cluster both come on when the ignition switch is turned to the ON position. They should go out with the engine running.

The system will turn the ESP/BAS Malfunction Indicator Light on continuously while the engine running if it detects a malfunction in either the ESP or the BAS or both. If the light remains on after several ignition cycles, and you have driven the vehicle several miles (kilometers) at speeds greater than 30 mph (48 km/h), and the

ESP is synchronized (refer to Synchronizing ESP), see your authorized dealer as soon as possible to have the problem diagnosed and corrected.

NOTE:

- The ESP/TCS Indicator Light and the ESP/BAS Malfunction Indicator Light will turn on momentarily each time the ignition switch is turned ON.
- Each time the ignition switch is turned ON, the ESP system will be on even if it was turned off previously.
- The ESP control system will make buzzing or clicking sounds when it is active. This is NORMAL; the sounds will stop when ESP becomes inactive following the maneuver that caused the ESP activation.

TIRE SAFETY INFORMATION

Tire Markings

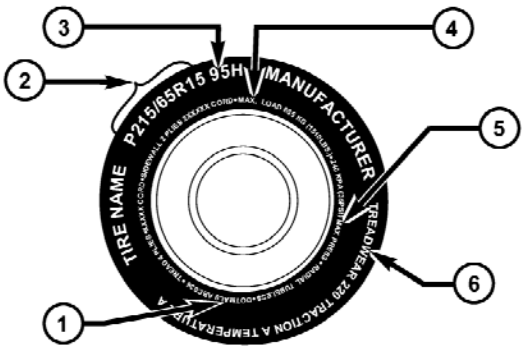

1 — U.S. DOT Safety Standards Code (TIN)	4 — Maximum Load
2 — Size Designation	5 — Maximum Pressure
3 — Service Description	6 — Treadwear, Traction and Temperature Grades

NOTE:

- P (Passenger) - Metric tire sizing is based on U.S. design standards. P-Metric tires have the letter "P" molded into the sidewall preceding the size designation. Example: P215/65R15 95H.
- European-Metric tire sizing is based on European design standards. Tires designed to this standard have the tire size molded into the sidewall beginning with the section width. The letter "P" is absent from this tire size designation. Example: 215/65R15 96H.
- LT (Light Truck) - Metric tire sizing is based on U.S. design standards. The size designation for LT-Metric tires is the same as for P-Metric tires except for the letters "LT" that are molded into the sidewall preceding the size designation. Example: LT235/85R16.
- Temporary spare tires are high-pressure compact spares designed for temporary emergency use only. Tires designed to this standard have the letter "T" molded into the sidewall preceding the size designation. Example: T145/80D18 103M.
- High flotation tire sizing is based on U.S. design standards and it begins with the tire diameter molded into the sidewall. Example: 31x10.5 R15 LT.

Tire Sizing Chart

EXAMPLE:
Size Designation:
P = Passenger car tire size based on U.S. design standards **"....blank...."** = Passenger car tire based on European design standards **LT** = Light truck tire based on U.S. design standards **T** = Temporary spare tire **31** = Overall diameter in inches (in)
215 = Section width in millimeters (mm)
65 = Aspect ratio in percent (%) — Ratio of section height to section width of tire **10.5** = Section width in inches (in)
R = Construction code — "R" means radial construction —"D" means diagonal or bias construction
15 = Rim diameter in inches (in)

EXAMPLE:
Service Description:
95 = Load Index — A numerical code associated with the maximum load a tire can carry
H = Speed Symbol — A symbol indicating the range of speeds at which a tire can carry a load corresponding to its load index under certain operating conditions — The maximum speed corresponding to the speed symbol should only be achieved under specified operating conditions (i.e., tire pressure, vehicle loading, road conditions, and posted speed limits)
Load Identification:
"....blank...." = Absence of any text on the sidewall of the tire indicates a Standard Load (SL) tire
Extra Load (XL) = Extra load (or reinforced) tire
Light Load = Light load tire
C, D, E = Load range associated with the maximum load a tire can carry at a specified pressure
Maximum Load — Maximum load indicates the maximum load this tire is designed to carry
Maximum Pressure — Maximum pressure indicates the maximum permissible cold tire inflation pressure for this tire

Tire Identification Number (TIN)

The TIN may be found on one or both sides of the tire, however, the date code may only be on one side. Tires with white sidewalls will have the full TIN, including the date code, located on the white sidewall side of the tire. Look for the TIN on the outboard side of black sidewall tires as mounted on the vehicle. If the TIN is not found on the outboard side, then you will find it on the inboard side of the tire.

EXAMPLE:
DOT MA L9 ABCD 0301
DOT = Department of Transportation — This symbol certifies that the tire is in compliance with the U.S. Department of Transportation tire safety standards and is approved for highway use
MA = Code representing the tire manufacturing location (two digits)
L9 = Code representing the tire size (two digits)
ABCD = Code used by the tire manufacturer (one to four digits)
03 = Number representing the week in which the tire was manufactured (two digits) —03 means the 3rd week.
01 = Number representing the year in which the tire was manufactured (two digits) —01 means the year 2001 — Prior to July 2000, tire manufacturers were only required to have one number to represent the year in which the tire was manufactured. Example: 031 could represent the 3rd week of 1981 or 1991

Tire Loading and Tire Pressure

Tire Placard Location

NOTE: The proper cold tire inflation pressure is listed on the driver's side B-Pillar.

Tire and Loading Information Placard

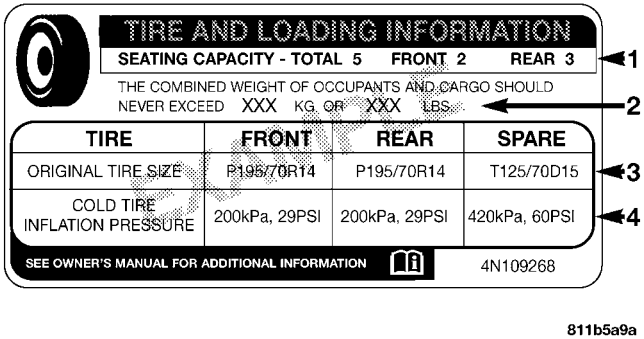

Tire and Loading Information Placard

This placard tells you important information about the:

1) number of people that can be carried in the vehicle
2) total weight your vehicle can carry
3) tire size designed for your vehicle
4) cold tire inflation pressures for the front, rear, and spare tires.

Loading

The vehicle maximum load on the tire must not exceed the load carrying capacity of the tire on your vehicle. You will not exceed the tire's load carrying capacity if you adhere to the loading conditions, tire size, and cold tire inflation pressures specified on the Tire and Loading Information placard and in the "Vehicle Loading" section of this manual.

NOTE: Under a maximum loaded vehicle condition, gross axle weight ratings (GAWRs) for the front and rear

axles must not be exceeded. For further information on GAWRs, vehicle loading, and trailer towing, refer to "Vehicle Loading" in this section.

To determine the maximum loading conditions of your vehicle, locate the statement "The combined weight of occupants and cargo should never exceed XXX lbs or XXX kg" on the Tire and Loading Information placard. The combined weight of occupants, cargo/luggage and trailer tongue weight (if applicable) should never exceed the weight referenced here.

Steps for Determining Correct Load Limit

1. Locate the statement "The combined weight of occupants and cargo should never exceed XXX lbs or XXX kg" on your vehicle's placard.

2. Determine the combined weight of the driver and passengers that will be riding in your vehicle.

3. Subtract the combined weight of the driver and passengers from XXX lbs or XXX kg.

4. The resulting figure equals the available amount of cargo and luggage load capacity. For example, if "XXX" amount equals 1,400 lbs (635 kg) and there will be five 150 lb (68 kg) passengers in your vehicle, the amount of available cargo and luggage load capacity is 650 lbs (295 kg) (since 5 x 150 = 750, and 1400 – 750 = 650 lbs [295 kg]).

5. Determine the combined weight of luggage and cargo being loaded on the vehicle. That weight may not safely exceed the available cargo and luggage load capacity calculated in step 4.

6. If your vehicle will be towing a trailer, load from your trailer will be transferred to your vehicle. Consult this manual to determine how this reduces the available cargo and luggage load capacity of your vehicle.

NOTE:

- The following table shows examples on how to calculate total load, cargo/luggage, and towing capacities of your vehicle with varying seating configurations and number and size of occupants. This table is for illustration purposes only and may not be accurate for the seating and load carry capacity of your vehicle.
- For the following example, the combined weight of occupants and cargo should never exceed 865 lbs (392 kg).

Occupants			Combined weight of occupants and cargo from Tire Placard	MINUS	Combined Occupant's weight	=	AVAILABLE Cargo/Luggage and Trailer Tongue Weight
TOTAL	FRONT	REAR					
EXAMPLE 1							
5	2	3	865 lbs	minus	Occupant 1: 200 lbs Occupant 2: 130 lbs Occupant 3: 160 lbs Occupant 4: 100 lbs Occupant 5: 80 lbs TOTAL WEIGHT: 670 lbs 670 lbs	=	195 lbs
EXAMPLE 2							
3	2	1	865 lbs	minus	Occupant 1: 210 lbs Occupant 2: 180 lbs Occupant 3: 150 lbs TOTAL WEIGHT: 540 lbs 540 lbs	=	325 lbs
EXAMPLE 3							
2	2	0	865 lbs	minus	Occupant 1: 200 lbs Occupant 2: 200 lbs TOTAL WEIGHT: 400 lbs 400 lbs	=	465 lbs

EXAMPLE

811a4d11

WARNING!

Overloading of your tires is dangerous. Overloading can cause tire failure, affect vehicle handling, and increase your stopping distance. Use tires of the recommended load capacity for your vehicle. Never overload them.

TIRES — GENERAL INFORMATION

Tire Pressure

Proper tire inflation pressure is essential to the safe and satisfactory operation of your vehicle. Three primary areas are affected by improper tire pressure:

Safety

WARNING!

- **Improperly inflated tires are dangerous and can cause accidents.**
- **Under-inflation increases tire flexing and can result in tire failure.**
- **Over-inflation reduces a tire's ability to cushion shock. Objects on the road and chuckholes can cause damage that result in tire failure.**
- **Unequal tire pressures can cause steering problems. You could lose control of your vehicle.**
- **Over-inflated or under-inflated tires can affect vehicle handling and can fail suddenly, resulting in loss of vehicle control.**

(Continued)

WARNING! (Continued)

- **Unequal tire pressures from one side of the vehicle to the other can cause the vehicle to drift to the right or left.**
- **Always drive with each tire inflated to the recommended cold tire inflation pressure.**

Economy

Improper inflation pressures can cause uneven wear patterns to develop across the tire tread. These abnormal wear patterns will reduce tread life resulting in a need for earlier tire replacement. Under-inflation also increases tire rolling resistance and results in higher fuel consumption.

Ride Comfort and Vehicle Stability

Proper tire inflation contributes to a comfortable ride. Over-inflation produces a jarring and uncomfortable ride.

Tire Inflation Pressures

The proper cold tire inflation pressure is listed on the driver's side "B" Pillar.

Some vehicles may have Supplemental Tire Pressure Information for vehicle loads that are less than the maximum loaded vehicle condition. These pressure conditions will be found in the "Supplemental Tire Pressure Information" section of this manual.

The pressure should be checked and adjusted as well as inspecting for signs of tire wear or visible damage at least once a month. Use a good quality pocket-type gauge to check tire pressure. Do not make a visual judgement when determining proper inflation. Radial tires may look properly inflated even when they are under-inflated.

CAUTION!

After inspecting or adjusting the tire pressure, always reinstall the valve stem cap (if equipped). This will prevent moisture and dirt from entering the valve stem, which could damage the valve stem.

Inflation pressures specified on the placard are always "cold tire inflation pressure." Cold tire inflation pressure is defined as the tire pressure after the vehicle has not been driven for at least three hours, or driven less than 1 mile (1.6 km) after a three hour period. The cold tire inflation pressure must not exceed the maximum inflation pressure molded into the tire sidewall.

Check tire pressures more often if subject to a wide range of outdoor temperatures, as tire pressures vary with temperature changes.

Tire pressures change by approximately 1 psi (7 kPa) per 12°F (7°C) of air temperature change. Keep this in mind when checking tire pressure inside a garage, especially in the Winter.

Example: If garage temperature = 68°F (20°C) and the outside temperature = 32°F (0°C) then the cold tire inflation pressure should be increased by 3 psi (21 kPa), which equals 1 psi (7 kPa) for every 12°F (7°C) for this outside temperature condition.

Tire pressure may increase from 2 to 6 psi (13 to 40 kPa) during operation. DO NOT reduce this normal pressure build up or your tire pressure will be too low.

Tire Pressures for High Speed Operation

The manufacturer advocates driving at safe speeds within posted speed limits. Where speed limits or conditions are such that the vehicle can be driven at high speeds, maintaining correct tire inflation pressure is very important. Increased tire pressure and reduced vehicle

loading may be required for high-speed vehicle operation. Refer to original equipment or an authorized tire dealer for recommended safe operating speeds, loading and cold tire inflation pressures.

WARNING!

High speed driving with your vehicle under maximum load is dangerous. The added strain on your tires could cause them to fail. You could have a serious accident. Do not drive a vehicle loaded to the maximum capacity at continuous speeds above 75 mph (120 km/h).

Radial Ply Tires

WARNING!

Combining radial ply tires with other types of tires on your vehicle will cause your vehicle to handle poorly. The instability could cause an accident. Always use radial ply tires in sets of four (or six, in case of trucks with dual rear wheels). Never combine them with other types of tires.

Cuts and punctures in radial tires are repairable only in the tread area because of sidewall flexing. Consult your authorized tire dealer for radial tire repairs.

Compact Spare Tire — If Equipped

The compact spare is for temporary emergency use with radial tires. It is engineered to be used on your style

vehicle only. Since this tire has limited tread life, the original tire should be repaired (or replaced) and reinstalled at the first opportunity.

WARNING!

Temporary use spare tires are for emergency use only. With these tires, do not drive more than 50 mph (80 km/h). Temporary use spare tires have limited tread life. When the tread is worn to the tread wear indicators, the temporary use spare tire needs to be replaced. Be sure to follow the warnings, which apply to your spare. Failure to do so could result in spare tire failure and loss of vehicle control.

Do not install a wheel cover or attempt to mount a conventional tire on the compact spare wheel, since the wheel is designed specifically for the compact spare.

Do not install more than one compact spare tire/wheel on the vehicle at any given time.

CAUTION!

Because of the reduced ground clearance, do not take your vehicle through an automatic car wash with the compact spare installed. Damage to the vehicle may result.

Limited-Use Spare — If Equipped

The limited-use spare tire is for temporary emergency use on your vehicle. This tire is identified by a limited-use spare tire warning label located on the limited-use spare tire and wheel assembly. This tire may look like the original equipped tire on the front or rear axle of your vehicle, but it is not. Installation of this limited-use spare tire affects vehicle handling. Since it is not the same tire, replace (or repair) the original tire and reinstall on the vehicle at the first opportunity.

WARNING!

The limited-use spare tires are for emergency use only. Installation of this limited-use spare tire affects vehicle handling. With this tire, do not drive more than 50 mph (80 km/h). Keep inflated to the cold tire inflation pressure listed on either your tire placard or limited-use spare tire and wheel assembly. Replace (or repair) the original tire at the first opportunity and reinstall it on your vehicle. Failure to do so could result in loss of vehicle control.

Tire Spinning

When stuck in mud, sand, snow, or ice conditions, do not spin your vehicle's wheels faster than 30 mph (48 km/h) or for longer than 30 seconds continuously without stopping when you are stuck.

WARNING!

Fast spinning tires can be dangerous. Forces generated by excessive wheel speeds may cause tire damage or failure. A tire could explode and injure someone. Do not spin your vehicle's wheels faster than 30 mph (48 km/h) or for more than 30 seconds continuously when you are stuck, and do not let anyone near a spinning wheel, no matter what the speed.

Tread Wear Indicators

Tread wear indicators are in the original equipment tires to help you in determining when your tires should be replaced.

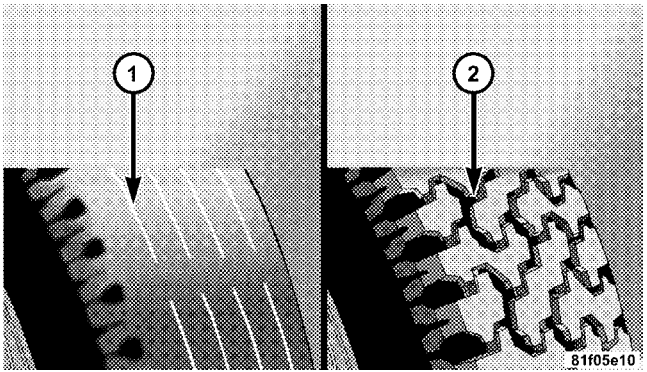

1 — Worn Tire
2 — New Tire

These indicators are molded into the bottom of the tread grooves. They will appear as bands when the tread depth becomes 1/16 in (2 mm). When the tread is worn to the tread wear indicators, the tire should be replaced.

Many states have laws requiring tire replacement at this point.

Life of Tire

The service life of a tire is dependent upon varying factors including, but not limited to:

- Driving style
- Tire pressure
- Distance driven

WARNING!

Tires and the spare tire should be replaced after six years, regardless of the remaining tread. Failure to follow this warning can result in sudden tire failure. You could lose control and have an accident resulting in serious injury or death.

Keep dismounted tires in a cool, dry place with as little exposure to light as possible. Protect tires from contact with oil, grease, and gasoline.

Replacement Tires

The tires on your new vehicle provide a balance of many characteristics. They should be inspected regularly for wear and correct cold tire inflation pressure. The manufacturer strongly recommends that you use tires equivalent to the originals in size, quality and performance when replacement is needed. (Refer to the paragraph on "Tread Wear Indicators"). Refer to the "Tire and Loading Information" placard for the size designation of your tire. The service description and load identification will be found on the original equipment tire. Failure to use equivalent replacement tires may adversely affect the safety, handling, and ride of your vehicle. We recommend that you contact your original equipment or an authorized tire dealer with any questions you may have on tire specifications or capability.

WARNING!

- **Do not use a tire, wheel size or rating other than that specified for your vehicle. Some combinations of unapproved tires and wheels may change suspension dimensions and performance characteristics, resulting in changes to steering, handling, and braking of your vehicle. This can cause unpredictable handling and stress to steering and suspension components. You could lose control and have an accident resulting in serious injury or death. Use only the tire and wheel sizes with load ratings approved for your vehicle.**
- **Never use a tire with a smaller load index or capacity, other than what was originally equipped on your vehicle. Using a tire with a smaller load index could result in tire overloading and failure. You could lose control and have an accident.**

(Continued)

WARNING! (Continued)

- **Failure to equip your vehicle with tires having adequate speed capability can result in sudden tire failure and loss of vehicle control.**

CAUTION!

Replacing original tires with tires of a different size may result in false speedometer and odometer readings.

SELF-SEALING TIRES — IF EQUIPPED

A non-hardening viscous sealant applied to the inner liner of each tire fills punctures up to 0.19 in (5 mm) to minimize the loss of air pressure. This contributes to the safety of the vehicle by significantly reducing the probability of a roadside stop due to a flat tire.

TIRE CHAINS

Use only compact chains or other traction aids that meet SAE type "Class S" specifications. Chains must be the proper size for the vehicle, as recommended by the chain manufacturer. In addition, only install tire chains on P215/65 R17 and P225/60 R18 size tires. The P245/45 R20 size tires do not provide adequate clearance for tire chains.

NOTE: Do not use tire chains on a compact spare tire.

CAUTION!

To avoid damage to your vehicle or tires, observe the following precautions:

(Continued)

CAUTION! (Continued)

- **Because of restricted chain clearance between tires and other suspension components, it is important that only chains in good condition are used. Broken chains can cause serious damage. Stop the vehicle immediately if noise occurs that could indicate chain breakage. Remove the damaged parts of the chain before further use.**
- **Install chains on the rear wheels as tightly as possible and then retighten after driving about ½ mile (0.8 km).**
- **Do not exceed 30 mph (48 km/h).**
- **Drive cautiously and avoid severe turns and large bumps, especially with a loaded vehicle.**
- **Use on rear wheels only.**
- **Do not drive for prolonged period on dry pavement.**

(Continued)

CAUTION! (Continued)

- **Observe the tire chain manufacturer's instructions on the method of installation, operating speed, and conditions for use. Always use the lower suggested operating speed of the chain manufacturer if different from the speed recommended by the manufacture.**

NOTE: In order to avoid damage to tires, chains, and your vehicle do not drive for a prolonged period on dry pavement. Observe the tire chain manufacturer's instructions on method of installation, operating speed, and conditions for usage.

Always use the lower suggested operating speed if both the chain manufacturer and vehicle manufacturer suggest a maximum speed. This notice applies to all chain traction devices, including link and cable (radial) chains.

SNOW TIRES

Some areas of the country require the use of snow tires during the winter. Standard tires are of the all season type and satisfy this requirement as indicated by the M+S designation on the tire sidewall.

If you need snow tires, select tires equivalent in size and type to the original equipment tires. Use snow tires only in sets of four. Failure to do so may adversely affect the safety and handling of your vehicle.

Snow tires generally have lower speed ratings than what was originally equipped with your vehicle and should not be operated at sustained speeds over 75 mph (120 km/h).

TIRE ROTATION RECOMMENDATIONS

Tires on the front and rear axles of vehicles operate at different loads and perform different steering, driving, and braking functions. For these reasons, they wear at unequal rates and tend to develop irregular wear patterns. These effects can be reduced by timely rotation of tires. The benefits of rotation are especially worthwhile with aggressive tread designs such as those on all season type tires. Rotation will increase tread life, help to maintain mud, snow and wet traction levels, and contribute to a smooth, quiet ride.

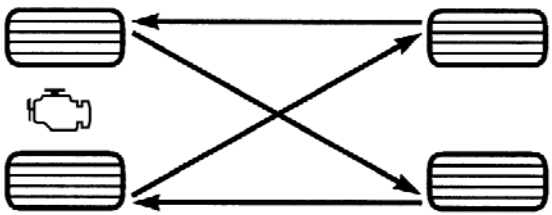

055703771

Follow the recommended tire rotation frequency for your type of driving found in the “Maintenance Schedules” section of this manual. More frequent rotation is permissible if desired. The reasons for any rapid or unusual wear should be corrected prior to rotation being performed.

TIRE PRESSURE MONITOR SYSTEM (TPMS)

The Tire Pressure Monitor System (TPMS) will warn the driver of a low tire pressure based on the vehicle recommended cold placard pressure.

The tire pressure will vary with temperature by about 1 psi (6.9 kPa) for every 12°F (6.5°C). This means that when the outside temperature decreases, the tire pressure will decrease. Tire pressure should always be set based on cold inflation tire pressure. This is defined as the tire pressure after the vehicle has not been driven for at least three hours, or driven less than 1 mile (1 km) after a three hour period. The cold tire inflation pressure must not exceed the maximum inflation pressure molded into the tire sidewall. Refer to the "Tires – General Information" in this section for information on how to properly inflate the vehicle's tires. The tire pressure will also increase as the vehicle is driven - this is normal and there should be no adjustment for this increased pressure.

The TPMS will warn the driver of a low tire pressure if the tire pressure falls below the low-pressure warning limit for any reason, including low temperature effects and natural pressure loss through the tire.

The TPMS will continue to warn the driver of low tire pressure as long as the condition exists, and will not turn off until the tire pressure is at or above the recommended cold placard pressure. Once the low tire pressure warning (Tire Pressure Monitoring [TPM] Telltale Light) illuminates, you must increase the tire pressure to the recommended cold placard pressure in order for the TPM Telltale Light to turn off. The system will automatically update and the TPM Telltale Light will turn off once the system receives the updated tire pressures. The vehicle may need to be driven for up to 20 minutes above 15 mph (25 km/h) in order for the TPMS to receive this information.

For example, your vehicle may have a recommended cold (parked for more than three hours) placard pressure of 30 psi (207 kPa). If the ambient temperature is 68°F (20°C) and the measured tire pressure is 27 psi (186 kPa), a temperature drop to 20°F (-7°C) will decrease the tire pressure to approximately 23 psi (158 kPa). This tire pressure is sufficiently low enough to turn ON the TPM Telltale Light. Driving the vehicle may cause the tire pressure to rise to approximately 27 psi (186 kPa), but the TPM Telltale Light will still be ON. In this situation, the TPM Telltale Light will turn OFF only after the tires are inflated to the vehicle's recommended cold placard pressure value.

CAUTION!

- **The TPMS has been optimized for the original equipment tires and wheels. TPMS pressures and warning have been established for the tire size equipped on your vehicle. Undesirable system operation or sensor damage may result when using replacement equipment that is not of the same size, type, and/or style. Aftermarket wheels can cause sensor damage. Do not use aftermarket tire sealants or balance beads if your vehicle is equipped with a TPMS, as damage to the sensors may result.**
- **After inspecting or adjusting the tire pressure, always reinstall the valve stem cap. This will prevent moisture and dirt from entering the valve stem, which could damage the TPM sensor.**

NOTE:

- The TPMS is not intended to replace normal tire care and maintenance or to provide warning of a tire failure or condition.
- The TPMS should not be used as a tire pressure gauge while adjusting your tire pressure.
- Driving on a significantly under-inflated tire causes the tire to overheat and can lead to tire failure. Under-inflation also reduces fuel efficiency and tire tread life, and may affect the vehicle's handling and stopping ability.
- The TPMS is not a substitute for proper tire maintenance, and it is the driver's responsibility to maintain correct tire pressure using an accurate tire pressure gauge, even if under-inflation has not reached the level to trigger illumination of the TPM Telltale Light.
- Seasonal temperature changes will affect tire pressure, and the TPMS will monitor the actual tire pressure in the tire.

Base System

The Tire Pressure Monitor System (TPMS) uses wireless technology with wheel rim mounted electronic sensors to monitor tire pressure levels. Sensors mounted to each wheel as part of the valve stem transmit tire pressure readings to the receiver module.

NOTE: It is particularly important for you to check the tire pressure in all of the tires on your vehicle monthly and to maintain the proper pressure.

The TPMS consists of the following components:

- Receiver module,
- Four TPM sensors, and
- TPM Telltale Light

The matching full size spare wheel and tire assembly (if equipped) has a TPM sensor. The matching full size spare can be used in place of any of the four road tires. The TPMS will only monitor the pressure in the full size spare when it is used in place of a road tire. Otherwise, a spare with a pressure below the low-pressure limit will not cause the TPM Telltale Light to illuminate or the chime to sound.

Tire Pressure Monitoring Low Pressure Warnings

The TPM Telltale Light will illuminate in the instrument cluster and a chime will sound when tire pressure is low in one or more of the four active road tires. Should this occur, you should stop as soon as possible, check the inflation pressure of each tire on your vehicle, and inflate each tire to the vehicle's recommended cold placard pressure value. Once the system receives the updated tire pressures, the system will automatically update and the TPM Telltale Light will turn off. The vehicle may need to be driven for up to 20 minutes above 15 mph (25 km/h) in order for the TPMS to receive this information.

Check TPMS Warning

If a system fault is detected, the TPM Telltale Light will flash on and off for 75 seconds and then remain on solid. The system fault will also sound a chime. If the ignition key is cycled, this sequence will repeat, providing the system fault still exists. The TPM Telltale Light will turn off when the fault condition no longer exists. A system fault can occur due to any of the following:

1. Signal interference due to electronic devices or driving next to facilities emitting the same radio frequencies as the TPM sensors.

2. Installing aftermarket window tinting that contains materials that may block radio wave signals.

3. Accumulation of snow or ice around the wheels or wheel housings.

4. Using tire chains on the vehicle.

5. Using wheels/tires not equipped with TPM sensors.

NOTE:

Vehicles with Full Size Spare

1. The matching full size spare wheel and tire assembly has a TPM sensor that can be monitored by the TPMS.
2. If you install the full size spare in place of a road tire that has a pressure below the low-pressure warning limit, upon the next ignition key cycle, a chime will sound and the TPM Telltale Light will turn ON.
3. Driving the vehicle for up to 20 minutes above 15 mph (25 km/h) will turn off the TPM Telltale Light, as long as no tire pressure is below the low-pressure warning limit in any of the four active road tires.

NOTE:

Vehicles with Compact Spare

1. The compact spare tire does not have a TPM sensor. Therefore, the TPMS will not monitor the pressure in the compact spare tire.
2. If you install the compact spare tire in place of a road tire that has a pressure below the low-pressure warning limit, upon the next ignition key cycle, a chime will sound and the TPM Telltale Light will turn ON.
3. After driving the vehicle for up to 20 minutes above 15 mph (25 km/h), the TPM Telltale Light will flash on and off for 75 seconds and then remain on solid.
4. For each subsequent ignition key cycle, a chime will sound and the TPM Telltale Light will flash on and off for 75 seconds and then remain on solid.

5. Once you repair or replace the original road tire, and reinstall it on the vehicle in place of the compact spare, the TPMS will update automatically and the TPM Telltale Light will turn OFF, as long as no tire pressure is below the low-pressure warning limit in any of the four active road tires. The vehicle may need to be driven for up to 20 minutes above 15 mph (25 km/h) in order for the TPMS to receive this information.

Premium System — If Equipped

The Tire Pressure Monitor System (TPMS) uses wireless technology with wheel rim mounted electronic sensors to monitor tire pressure levels. Sensors mounted to each wheel as part of the valve stem transmit tire pressure readings to the receiver module.

NOTE: It is particularly important for you to check the tire pressure in all of the tires on your vehicle monthly and to maintain the proper pressure.

The TPMS consists of the following components:

- Receiver module,
- Four TPM sensors,
- Various TPMS messages, which display in the Electronic Vehicle Information Center (EVIC), and
- TPM Telltale Light

The matching full size spare wheel and tire assembly (if equipped) has a TPM sensor. The full size spare can be used in place of any of the four road tires. A spare with a pressure below the low-pressure limit will not cause the TPM Telltale Light to illuminate or the chime to sound.

Tire Pressure Monitoring Low Pressure Warnings

The TPM Telltale Light will illuminate in the instrument cluster and a chime will sound when tire pressure is low in one or more of the four active road tires. In addition, the EVIC will display one or more low pressure messages (Left Front, Left Rear, Right Front, Right Rear) for three seconds and a graphic showing the pressure values of each tire with the low tire pressure values flashing.

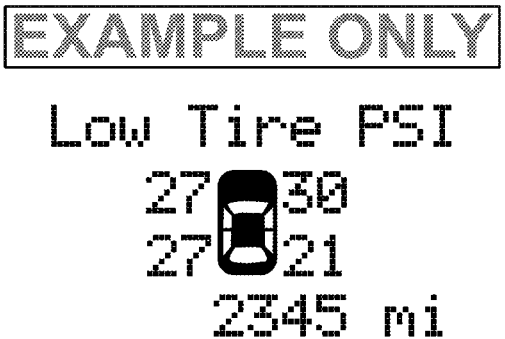

819793fc

Should this occur, you should stop as soon as possible and inflate all of the tires with low pressure (including those flashing in the EVIC graphic) to the vehicle's recommended cold placard pressure value. Once the system receives the updated tire pressures, the system will automatically update, the graphic display in the EVIC will stop flashing, and the TPM Telltale Light will

turn off. The vehicle may need to be driven for up to 20 minutes above 15 mph (25 km/h) in order for the TPMS to receive this information.

Check TPMS Warning

If a system fault is detected, the TPM Telltale Light will flash on and off for 75 seconds and then remain on solid. The system fault will also sound a chime. In addition, the EVIC will display a "CHECK TPM SYSTEM" message for three seconds and then display dashes (- -) in place of the pressure value to indicate which sensor is not being received.

81979401

If the ignition key is cycled, this sequence will repeat, providing the system fault still exists. If the system fault no longer exists, the TPM Telltale Light will no longer flash, and the "CHECK TPM SYSTEM" message will no longer display, and a pressure value will display in place of the dashes. A system fault can occur due to any of the following:

1. Signal interference due to electronic devices or driving next to facilities emitting the same radio frequencies as the TPM sensors.

2. Installing aftermarket window tinting that contains materials that may block radio wave signals.

3. Accumulation of snow or ice around the wheels or wheel housings.

4. Using tire chains on the vehicle.

5. Using wheels/tires not equipped with TPM sensors.

NOTE:

Vehicles with Full Size Spare

1. The matching full size spare wheel and tire assembly has a TPM sensor that can be monitored by the TPMS.
2. If you install the full size spare in place of a road tire that has a pressure below the low-pressure warning limit, upon the next ignition key cycle, a chime will sound and the TPM Telltale Light will turn ON. In addition, the EVIC will display a low pressure message and a graphic showing the low tire pressure value flashing.
3. After driving the vehicle for up to 20 minutes above 15 mph (25 km/h) the TPM Telltale Light will turn OFF, as long as no tire pressure is below the low-pressure warning limit in any of the four active road tires.

NOTE:

Vehicles with Compact Spare

1. The compact spare tire does not have a TPM sensor. Therefore, the TPMS will not monitor the pressure in the compact spare tire.
2. If you install the compact spare tire in place of a road tire that has a pressure below the low-pressure warning limit, upon the next ignition key cycle, the TPM Telltale Light will remain ON and a chime will sound. In addition, the graphic in the EVIC will still display a flashing pressure value.
3. After driving the vehicle for up to 20 minutes above 15 mph (25 km/h), the TPM Telltale Light will flash on and off for 75 seconds and then remain on solid. In addition, the EVIC will display a "CHECK TPM SYSTEM" message for three seconds and then display dashes (- -) in place of the pressure value.
4. For each subsequent ignition key cycle, a chime will sound, the TPM Telltale Light will flash on and off for 75 seconds and then remain on solid, and the EVIC will display a "CHECK TPM SYSTEM" message for three seconds and then display dashes (- -) in place of the pressure value.
5. Once you repair or replace the original road tire and reinstall it on the vehicle in place of the compact spare, the TPMS will update automatically. In addition, the TPM Telltale Light will turn OFF and the graphic in the EVIC will display a new pressure value instead of dashes (- -), as long as no tire pressure is below the low-pressure warning limit in any of the four active road tires. The vehicle may need to be driven for up to 20 minutes above 15 mph (25 km/h) in order for the TPMS to receive this information.

General Information

This device complies with Part 15 of the FCC rules and RSS 210 of Industry Canada. Operation is subject to the following conditions:

- This device may not cause harmful interference.
- This device must accept any interference received, including interference that may cause undesired operation.

The TPM sensors are regulated under one of the following licenses:

United States KR5S120123
Canada 2671-S120123

FUEL REQUIREMENTS

2.7L Engine

800dfab6

The 2.7L engine is designed to meet all emissions regulations and provide excellent fuel economy and performance when using high-quality unleaded "regular" gasoline having an octane rating of 87. The use of premium gasoline is not recommended, as it will not provide any benefit over regular gasoline in these engines.

3.5L and 5.7L Engines

800dfab7

The 3.5L and 5.7L engines are designed to meet all emissions regulations and provide satisfactory fuel economy and performance when using high-quality unleaded gasoline having an octane range of 87 to 89. The manufacturer recommends the use of 89 octane for optimum performance.

The use of premium gasoline is not recommended, as it will not provide any benefit over regular gasoline in these engines.

Light spark knock at low engine speeds is not harmful to your engine. However, continued heavy spark knock at high speeds can cause damage and immediate service is required. Poor quality gasoline can cause problems such as hard starting, stalling, and hesitations. If you experience these symptoms, try another brand of gasoline before considering service for the vehicle.

Over 40 auto manufacturers worldwide have issued and endorsed consistent gasoline specifications (the World Wide Fuel Charter, WWFC) which define fuel properties necessary to deliver enhanced emissions, performance, and durability for your vehicle. The manufacturer recommends the use of gasolines that meet the WWFC specifications, if they are available.

Reformulated Gasoline

Many areas of the country require the use of cleaner burning gasoline referred to as "Reformulated Gasoline." Reformulated gasolines contain oxygenates and are specifically blended to reduce vehicle emissions and improve air quality.

The manufacturer supports the use of reformulated gasolines. Properly blended reformulated gasolines will provide excellent performance and durability of engine and fuel system components.

Gasoline/Oxygenate Blends

Some fuel suppliers blend unleaded gasoline with oxygenates such as 10% ethanol, MTBE, and ETBE. Oxygenates are required in some areas of the country during the winter months to reduce carbon monoxide emissions. Fuels blended with these oxygenates may be used in your vehicle.

CAUTION!

DO NOT use gasolines containing Methanol or E85 Ethanol. Use of these blends may result in starting and driveability problems and may damage critical fuel system components.

Problems that result from using methanol/gasoline or E85 ethanol blends are not the responsibility of the manufacturer. While MTBE is an oxygenate made from methanol, it does not have the negative effects of methanol.

E-85 Usage In Non-Flex Fuel Vehicles

Non-FFV vehicles are compatible with gasoline containing 10% ethanol (E10). Gasoline with higher ethanol content may void the vehicle's warranty.

If a Non-FFV vehicle is inadvertently fueled with E-85 fuel, the engine will have some or all of these symptoms:

- operate in a lean mode
- OBD II "Malfunction Indicator Light" on
- poor engine performance
- poor cold start and cold drivability
- increased risk for fuel system component corrosion

To fix a Non-FFV vehicle inadvertently fueled once with E-85 perform the following:

- change the engine oil and oil filter
- disconnect and reconnect the battery
- drain the fuel tank (see your authorized dealer)

More extensive repairs will be required for prolonged exposure to E-85 fuel.

MMT In Gasoline

MMT is a manganese-containing metallic additive that is blended into some gasoline to increase octane. Gasoline blended with MMT provides no performance advantage beyond gasoline of the same octane number without MMT. Gasoline blended with MMT reduces spark plug life and reduces emissions system performance in some vehicles. The manufacturer recommends that gasoline without MMT be used in your vehicle. The MMT content of gasoline may not be indicated on the gasoline pump, therefore, you should ask your gasoline retailer whether the gasoline contains MMT. It is even more important to look for gasoline without MMT in Canada, because MMT can be used at levels higher than those allowed in the United States. MMT is prohibited in Federal and California reformulated gasoline.

Materials Added to Fuel

All gasoline sold in the United States is required to contain effective detergent additives. Use of additional detergents or other additives is not needed under normal conditions and they would result in additional cost. Therefore, you should not have to add anything to the fuel.

Fuel System Cautions

CAUTION!

Follow these guidelines to maintain your vehicle's performance:

- The use of leaded gas is prohibited by Federal law. Using leaded gasoline can impair engine performance and damage the emissions control system.
- An out-of-tune engine or certain fuel or ignition malfunctions can cause the catalytic converter to overheat. If you notice a pungent burning odor or some light smoke, your engine may be out of tune or malfunctioning and may require immediate service. Contact your authorized dealer for service assistance.

- The use of fuel additives, which are now being sold as octane enhancers, is not recommended. Most of these products contain high concentrations of methanol. Fuel system damage or vehicle performance problems resulting from the use of such fuels or additives is not the responsibility of the manufacturer.

NOTE: Intentional tampering with the emissions control system can result in civil penalties being assessed against you.

Carbon Monoxide Warnings

WARNING!

Carbon monoxide (CO) in exhaust gases is deadly. Follow the precautions below to prevent carbon monoxide poisoning:

- Do not inhale exhaust gases. They contain carbon monoxide, a colorless and odorless gas, which can kill. Never run the engine in a closed area, such as a garage, and never sit in a parked vehicle with the engine running for an extended period. If the vehicle is stopped in an open area with the engine running for more than a short period, adjust the ventilation system to force fresh, outside air into the vehicle.
- Guard against carbon monoxide with proper maintenance. Have the exhaust system inspected every time the vehicle is raised. Have any abnormal conditions repaired promptly. Until repaired, drive with all side windows fully open.
- Keep the trunk closed when driving your vehicle to prevent carbon monoxide and other poisonous exhaust gases from entering the vehicle.

ADDING FUEL

Fuel Filler Cap (Gas Cap)

The gas cap is located behind the fuel filler door on the left side of the vehicle. If so equipped, use the finger pull to open the door. Otherwise, push in on the left side (near the edge) of the fuel filler door to access the fuel filler cap. If the gas cap is lost or damaged, be sure the replacement cap is for use with this vehicle.

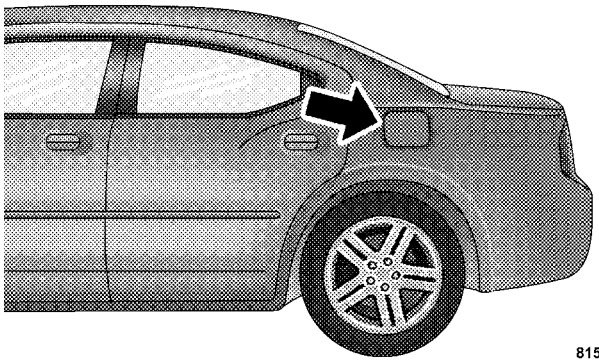

Fuel Filler Door

NOTE: When removing the fuel filler cap, lay the cap tether in the hook, located on the fuel filler cap door reinforcement.

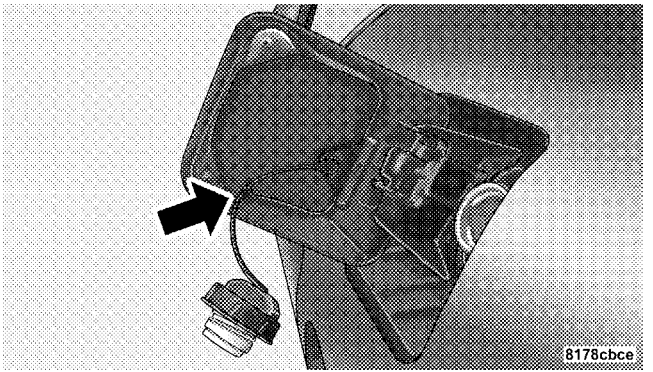

Gas Cap Tether Hook

CAUTION!

- **Damage to the fuel system or emissions control system could result from using an improper fuel tank filler tube cap (gas cap).**
- **A poorly fitting gas cap could let impurities into the fuel system.**
- **A poorly fitting gas cap may cause the Malfunction Indicator Light (MIL) to turn on.**
- **To avoid fuel spillage and overfilling, do not "top off" the fuel tank after filling. When the fuel nozzle "clicks" or shuts off, the fuel tank is full.**

WARNING!

- **Never have any smoking materials lit in or near the vehicle when the gas cap is removed or the tank filled.**
- **Never add fuel to the vehicle when the engine is running.**
- **A fire may result if gasoline is pumped into a portable container that is inside of a vehicle. You could be burned. Always place gas containers on the ground while filling.**

NOTE:

- Tighten the gas cap until you hear a "clicking" sound. This is an indication that the gas cap is tightened properly. The MIL in the instrument cluster may turn on if the gas cap is not secured properly. Make sure that the gas cap is tightened each time the vehicle is refueled.
- When the fuel nozzle "clicks" or shuts off, the fuel tank is full.

Loose Fuel Filler Cap Message

If the vehicle diagnostic system determines that the fuel filler cap is loose, improperly installed, or damaged, a "Check Gascap" message will display in the Electronic Vehicle Information Center (EVIC) (if equipped). If this occurs, tighten the fuel filler cap properly and press the TRIP ODOMETER button to turn off the message. If the problem continues, the message will appear the next time the vehicle is started.

A loose, improperly installed, or damaged fuel filler cap may also turn on the MIL. Refer to "Onboard Diagnostic System" in Section 7.

VEHICLE LOADING

The load carrying capacity of your vehicle is shown on the "Vehicle Certification Label." This information should be used for passenger and luggage loading as indicated.

Do not exceed the specified Gross Vehicle Weight Rating (GVWR) or the Gross Axle Weight Rating (GAWR).

Vehicle Certification Label

Your vehicle has a Vehicle Certification Label affixed to the rear of the driver's door.

The label contains the following information:

- Name of manufacturer
- Month and year of manufacture
- Gross Vehicle Weight Rating (GVWR)
- Gross Axle Weight Rating (GAWR) front
- Gross Axle Weight Rating (GAWR) rear
- Vehicle Identification Number (VIN)
- Type of Vehicle
- Month Day and Hour of Manufacture (MDH)

The bar code allows a computer scanner to read the VIN.

Gross Vehicle Weight Rating (GVWR)

The GVWR is the total allowable weight of your vehicle. This includes driver, passengers, and cargo. The total load must be limited so that you do not exceed the GVWR.

Gross Axle Weight Rating (GAWR)

The GAWR is the maximum capacity of the front and rear axles. Distribute the load over the front and rear axles evenly. Make sure that you do not exceed either front or rear GAWR.

WARNING!

Because the front wheels steer the vehicle, it is important that you do not exceed the maximum front or rear GAWR. A dangerous driving condition can result if either rating is exceeded. You could lose control of the vehicle and have an accident.

Overloading

The load carrying components (axle, springs, tires, wheels, etc.) of your vehicle will provide satisfactory service as long as you do not exceed the GVWR and the front and rear GAWR.

The best way to figure out the total weight of your vehicle is to weigh it when it is fully loaded and ready for operation. Weigh it on a commercial scale to ensure that it is not over the GVWR.

Figure out the weight on the front and rear of the vehicle separately. It is important that you distribute the load evenly over the front and rear axles.

Overloading can cause potential safety hazards and shorten useful service life. Heavier axles or suspension components do not necessarily increase the vehicle's GVWR.

Loading

To load your vehicle properly, first figure out its empty weight, axle-by-axle and side-by-side. Store heavier items down low and be sure you distribute their weight as evenly as possible. Stow all loose items securely before driving. If weighing the loaded vehicle shows that you have exceeded either GAWR, but the total load is within the specified GVWR, you must redistribute the weight. Improper weight distribution can have an adverse effect on the way your vehicle steers and handles and the way the brakes operate.

NOTE:

- Refer to the "Vehicle Certification Label" affixed to the rear of the driver's door for your vehicle's GVWR and GAWRs.
- Refer to the "Tire Placard" for your vehicle's proper tire pressure.

TRAILER TOWING

In this section, you will find safety tips and information on limits to the type of towing you can reasonably do with your vehicle. Before towing a trailer, carefully review this information to tow your load as efficiently and safely as possible.

To maintain warranty coverage, follow the requirements and recommendations in this manual concerning vehicles used for trailer towing.

Common Towing Definitions

The following trailer towing related definitions will assist you in understanding the following information:

Gross Vehicle Weight Rating (GVWR)

The GVWR is the total allowable weight of your vehicle. This includes driver, passengers, cargo, and tongue weight. The total load must be limited so that you do not exceed the GVWR.

Gross Trailer Weight (GTW)

The GTW is the weight of the trailer plus the weight of all cargo, consumables, and equipment (permanent or temporary) loaded in or on the trailer in its "loaded and ready for operation" condition. The recommended way to measure GTW is to put your fully loaded trailer on a vehicle scale. The entire weight of the trailer must be supported by the scale.

Gross Combination Weight Rating (GCWR)
The GCWR is the total permissible weight of your vehicle and trailer when weighed in combination. (Note that GCWR ratings include a 150 lbs [68 kg] allowance for the presence of a driver.)

Gross Axle Weight Rating (GAWR)
The GAWR is the maximum capacity of the front and rear axles. Distribute the load over the front and rear axles evenly. Make sure that you do not exceed either front or rear GAWR.

WARNING!

It is important that you do not exceed the maximum front or rear GAWR. A dangerous driving condition can result if either rating is exceeded. You could lose control of the vehicle and have an accident.

Tongue Weight (TW)
The TW is the downward force exerted on the hitch ball by the trailer. In most cases, it should not be less than 10% or more than 15% of the trailer load. You must consider this as part of the load on your vehicle.

Frontal Area
The frontal area is the maximum height and maximum width of the front of a trailer.

Trailer Sway Control
The trailer sway control is a telescoping link that can be installed between the hitch receiver and the trailer tongue that typically provides adjustable friction associated with the telescoping motion to dampen any unwanted trailer swaying motions while traveling.

Weight-Carrying Hitch
A weight-carrying hitch supports the trailer tongue weight, just as if it were luggage located at a hitch ball or some other connecting point of the vehicle. These kinds

of hitches are the most popular on the market today and they are commonly used to tow small- and medium-sized trailers.

Weight-Distributing Hitch

A weight-distributing system works by applying leverage through spring (load) bars. They are typically used for heavier loads to distribute trailer tongue weight to the tow vehicle's front axle and the trailer axle(s). When used in accordance with the manufacturer's directions, it provides for a more level ride, offering more consistent steering and brake control thereby enhancing towing safety. The addition of a friction / hydraulic sway control also dampens sway caused by traffic and crosswinds and contributes positively to tow vehicle and trailer stability. Trailer sway control and a weight distributing (load equalizing) hitch are recommended for heavier Tongue Weights (TW) and may be required depending on vehicle and trailer configuration / loading to comply with Gross Axle Weight Rating (GAWR) requirements.

WARNING!

- **An improperly adjusted weight distributing hitch system may reduce handling, stability, braking performance, and could result in an accident.**
- **Weight distributing systems may not be compatible with surge brake couplers. Consult with your hitch and trailer manufacturer or a reputable recreational vehicle dealer for additional information.**

Trailer Hitch Classification

Your vehicle may be factory equipped for safe towing of trailers weighing over 2,000 lbs (907 kg) with the optional Trailer Tow Prep Package. See your authorized dealer for package content.

The following chart provides the industry standard for the maximum trailer weight a given trailer hitch class can tow and should be used to assist you in selecting the correct trailer hitch for your intended towing condition. Refer to the "Trailer Towing Weights (Maximum Trailer Weight Ratings)" chart for the Maximum GTW towable for your given drivetrain.

Trailer Hitch Classification Definitions	
Class	**Max. Trailer Hitch Industry Standards**
Class I - Light Duty	2,000 lbs (907 kg)
Refer to the "Trailer Towing Weights (Maximum Trailer Weight Ratings)" chart for the Maximum Gross Trailer Weight (GTW) towable for your given drivetrain.	

All trailer hitches should be professionally installed on your vehicle.

Trailer Towing Weights (Maximum Trailer Weight Ratings)

The following chart provides the maximum trailer weight ratings towable for your given drivetrain.

Engine/Transmission	Frontal Area	Max. GTW (Gross Trailer Wt.)	Max. Tongue Wt. (◊ see note)
2.7L & 3.5L Rear Wheel Drive (RWD) Automatic	22 sq ft (2.04 sq m)	1,000 lbs (454 kg)	100 lbs (45 kg)
3.5L All Wheel Drive (AWD) & 5.7L Automatic	32 sq ft (2.97 sq m)	2,000 lbs (907 kg)	200 lbs (91 kg)
Refer to local laws for maximum trailer towing speeds			
◊ NOTE: The trailer tongue weight must be considered as part of the combined weight of occupants and cargo, and it should never exceed the weight referenced on the “Tire and Loading Information” placard. Refer to “Tire–Safety Information” in this section.			

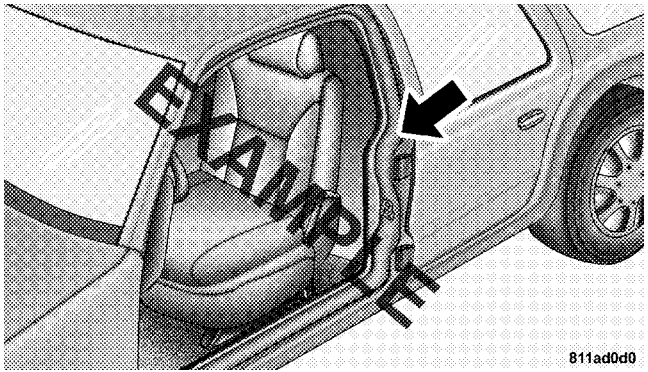

Tire Placard Location

Trailer and Tongue Weight

Always load a trailer with 60% to 65% of the weight in the front of the trailer. This places 10% to 15% of the Gross Trailer Weight (GTW) on the tow hitch of your vehicle. Loads balanced over the wheels or heavier in the rear can cause the trailer to sway **severely** side to side which will cause loss of control of the vehicle and trailer. Failure to load trailers heavier in front is the cause of many trailer accidents.

Never exceed the maximum tongue weight stamped on your bumper or trailer hitch.

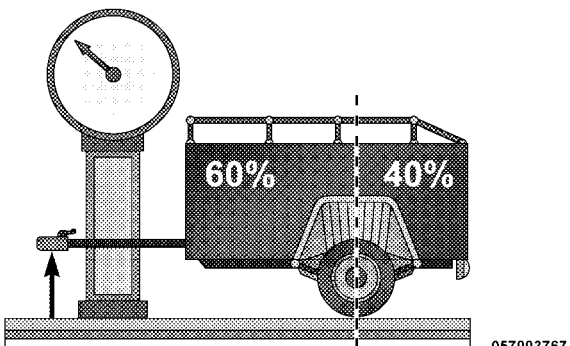

Consider the following items when computing the weight on the rear axle of the vehicle:

- The tongue weight of the trailer.
- The weight of any other type of cargo or equipment put in or on your vehicle.
- The weight of the driver and all passengers.

NOTE: Remember that everything put into or on the trailer adds to the load on your vehicle. Also, additional factory-installed options or dealer-installed options must be considered as part of the total load on your vehicle. Refer to the "Tire and Loading Information" placard for the maximum combined weight of occupants and cargo for your vehicle.

Towing Requirements

To promote proper break-in of your new vehicle drivetrain components the following guidelines are recommended:

CAUTION!

- **Avoid towing a trailer for the first 500 miles (805 km) of vehicle operation. Doing so may damage your vehicle.**
- **During the first 500 miles (805 km) of trailer towing, limit your speed to 50 mph (80 km/h).**

Perform the maintenance listed in Section 8. When towing a trailer, never exceed the GAWR, or GCWR, ratings.

WARNING!

Improper towing can lead to an injury accident. Follow these guidelines to make your trailer towing as safe as possible:

(Continued)

WARNING! (Continued)

Make certain that the load is secured in the trailer and it will not shift during travel. When trailering cargo that is not fully secured, dynamic load shifts can occur that may be difficult for the driver to control. You could lose control of your vehicle and have an accident.

- When hauling cargo or towing a trailer, do not overload your vehicle or trailer. Overloading can cause a loss of control, poor performance, or damage to brakes, axle, engine, transmission, steering, suspension, chassis structure, or tires.
- Safety chains must always be used between your vehicle and trailer. Always connect the chains to the frame or hook retainers of the vehicle hitch. Cross the chains under the trailer tongue and allow enough slack for turning corners.
- Vehicles with trailers should not be parked on a grade. When parking, apply the parking brake on the tow vehicle. Put the tow vehicle automatic transmission in PARK. Always, block or "chock" the trailer wheels.
- GCWR must not be exceeded.
- **Total weight must be distributed between the tow vehicle and the trailer such that the following four ratings are not exceeded:**

  1. Max loading as defined on the "Tire and Loading Information" placard.

  2. GTW

  3. GAWR

  4. Tongue weight rating for the trailer hitch utilized. (This requirement may limit the ability to always achieve the 10% to 15% range of tongue weight as a percentage of total trailer weight.)

Towing Requirements — Tires

– Do not attempt to tow a trailer while using a compact spare tire.

– Proper tire inflation pressures are essential to the safe and satisfactory operation of your vehicle. Refer to "Tires–General Information" in this section for information on tire pressures and for proper tire inflation procedures.

– Also, check the trailer tires for proper tire inflation pressures before trailer usage.

– Check for signs of tire wear or visible tire damage before towing a trailer. Refer to "Tires–General Information" in this section for information on tread wear indicators and for the proper inspection procedure.

– When replacing tires, refer to "Tires–General Information" in this section for information on replacement tires and for the proper tire replacement procedures. Replacing tires with a higher load carrying capacity will not increase the vehicle's GVWR and GAWR limits.

Towing Requirements — Trailer Brakes

– Do **not** interconnect the hydraulic brake system or vacuum system of your vehicle with that of the trailer. This could cause inadequate braking and possible personal injury.

– An electronically actuated trailer brake controller is required when towing a trailer with electronically actuated brakes. When towing a trailer equipped with a hydraulic surge actuated brake system, an electronic brake controller is not required.

– Trailer brakes are recommended for trailers over 1,000 lbs (454 kg) and required for trailers in excess of 2,000 lbs (907 kg).

CAUTION!

If the trailer weighs more than 1,000 lbs (454 kg) loaded, it should have its own brakes, and they should be of adequate capacity. Failure to do this could lead to accelerated brake lining wear, higher brake pedal effort, and longer stopping distances.

WARNING!

Do not connect trailer brakes to your vehicle's hydraulic brake lines. It can overload your brake system and cause it to fail. You might not have brakes when you need them and could have an accident.

Towing any trailer will increase your stopping distance. When towing, you should allow for additional space between your vehicle and the vehicle in front of you. Failure to do so could result in an accident.

Towing Requirements — Trailer Lights and Wiring

Whenever you pull a trailer, regardless of the trailer size, stoplights and turn signals on the trailer are required for motoring safety.

The Trailer Tow Package may include a 4- and 7-pin wiring harness. Use a factory approved trailer harness and connector.

NOTE: Do not cut or splice wiring into the vehicles wiring harness.

The electrical connections are all complete to the vehicle but you must mate the harness to a trailer connector. Refer to the following illustrations.

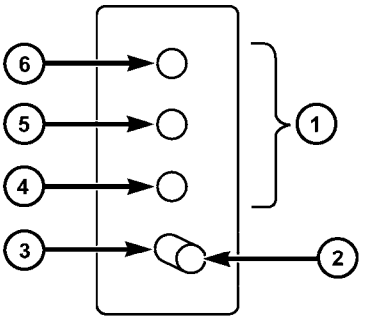

057003766

4-Pin Connector

1 — Female Pins	4 — Park
2 — Male Pin	5 — Left Stop/Turn
3 — Ground	6 — Right Stop/Turn

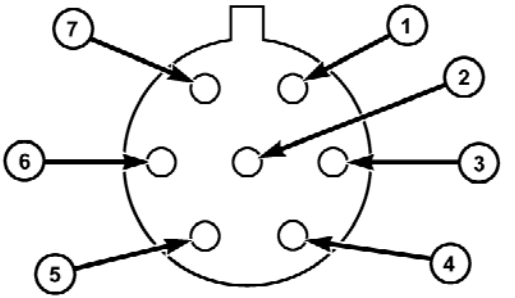

057003765

7-Pin Connector

1 — Battery	5 — Ground
2 — Backup Lamps	6 — Left Stop/Turn
3 — Right Stop/Turn	7 — Running Lamps
4 — Electric Brakes	

Towing Tips

Before setting out on a trip, practice turning, stopping, and backing up the trailer in an area located away from heavy traffic.

Towing Tips — Automatic Transmission

The DRIVE range can be selected when towing. However, if frequent shifting occurs while in this range, the "3" range should be selected.

NOTE: Using the "3" range while operating the vehicle under heavy operating conditions will improve performance and extend transmission life by reducing excessive shifting and heat buildup. This action will also provide better engine braking.

If you REGULARLY tow a trailer for more than 45 minutes of continuous operation, then change the automatic transmission fluid and filter according to the interval specified for "police, taxi, fleet, or frequent trailer towing" in the Maintenance Schedule.

Towing Tips — Electronic Speed Control (If Equipped)

- Don't use in hilly terrain or with heavy loads.
- When using the speed control, if you experience speed drops greater than 10 mph (16 km/h), disengage until you can get back to cruising speed.
- Use speed control in flat terrain and with light loads to maximize fuel efficiency.

Towing Tips — Autostick® (If Equipped)

- By using the Autostick® modes and selecting a specific gear range, frequent shifting can be avoided. The highest gear range should be selected that allows for adequate performance. For example, choose "4" if the desired speed can be maintained. Choose "3" or "2" if needed to maintain the desired speed.

– Extended driving at high RPM should be avoided to prevent excess heat generation. A reduction in vehicle speed may be required to avoid extended driving at high RPM. Return to a higher gear range or vehicle speed when road conditions and RPM level allows.

Towing Tips — Cooling System

To reduce potential for engine and transmission overheating, take the following actions:

– ***City Driving***

When stopped for short periods, put transmission in NEUTRAL and increase engine idle speed.

– ***Highway Driving***

Reduce speed.

– ***Air Conditioning***

Turn off temporarily.

RECREATIONAL TOWING (BEHIND MOTORHOME, ETC.)

Two-Wheel Drive and All-Wheel Drive

Recreational towing for this vehicle is not recommended.

NOTE: If the vehicle requires towing, make sure all four wheels are off the ground.

WHAT TO DO IN EMERGENCIES

CONTENTS

- Hazard Warning Flasher 356
- If Your Engine Overheats 356
- Jacking And Tire Changing 357
  - Jack Location/Spare Tire Stowage 358
  - Preparations For Jacking 360
  - Jacking And Changing a Tire 360
  - Compact Spare Tire 366
  - Wheel Cover Or Center Cap Installation (If Equipped) 366
- Jump-Starting Procedures 369
- Freeing A Stuck Vehicle 372
- Towing A Disabled Vehicle 374
  - Without The Ignition Key 374
  - Towing This Vehicle Behind Another Vehicle 374
  - Towing This Vehicle Behind Another Vehicle With A Tow Dolly 375

HAZARD WARNING FLASHER

The Hazard Warning flasher switch is located in the switch bank near the top center of the instrument panel.

Press the switch to turn on the Hazard Warning flashers. When the Hazard Warning flasher switch is activated, all directional turn signals will flash on and off to warn oncoming traffic of an emergency. Press the switch a second time to turn off flashers.

This is an emergency warning system and it should not be used when the vehicle is in motion. Use it when your vehicle is disabled and it is creating a safety hazard for other motorists.

When you must leave the vehicle to seek assistance, the Hazard Warning flashers will continue to operate even though the ignition switch is in the LOCK position.

NOTE: With extended use, the Hazard Warning flashers may wear down your battery.

IF YOUR ENGINE OVERHEATS

In any of the following situations, you can reduce the potential for overheating by taking the appropriate action.

- On the highways — slow down.
- In city traffic — while stopped, place the transmission in NEUTRAL, but do not increase the engine idle speed.

NOTE: There are steps that you can take to slow down an impending overheat condition. If your air conditioner is on, turn it off. The air conditioning system adds heat to the engine cooling system and turning off the A/C removes this heat. You can also turn the temperature control to maximum heat, the mode control to floor, and the fan control to high. This allows the heater core to act as a supplement to the radiator and aids in removing heat from the engine cooling system.

CAUTION!

Driving with a hot cooling system could damage your vehicle. If the temperature gauge reads "H," pull over and stop the vehicle. Idle the vehicle with the air conditioner turned off until the pointer drops back into the normal range. If the pointer remains on the "H," turn the engine off immediately and call for service.

WARNING!

A hot engine cooling system is dangerous. You or others could be badly burned by steam or boiling coolant. You may want to call a service center if your vehicle overheats. If you decide to look under the hood yourself, refer to Section 7 and follow the warnings under the "Cooling System Pressure Cap" paragraph.

JACKING AND TIRE CHANGING

WARNING!

- **Do not attempt to change a tire on the side of the vehicle close to moving traffic. Pull far enough off the road to avoid the danger of being hit when operating the jack or changing the wheel.**
- **Getting under a jacked-up vehicle is dangerous. The vehicle could slip off the jack and fall on you. You could be crushed. Never get any part of your body under a vehicle that is on a jack. Never start or run the engine while the vehicle is on a jack. If you need to get under a raised vehicle, take it to a service center where it can be raised on a lift.**

(Continued)

WARNING! (Continued)

- **The jack is designed to use as a tool for changing tires only. The jack should not be used to lift the vehicle for service purposes. The vehicle should be jacked on a firm level surface only. Avoid ice or slippery areas.**

Jack Location/Spare Tire Stowage

The jack and spare tire are both stowed under an access cover in the trunk. Follow these steps to access the jack and spare tire.

NOTE: The spare tire must be removed in order to access the jack.

1. Open the trunk.
2. Lift the access cover using the pull strap.

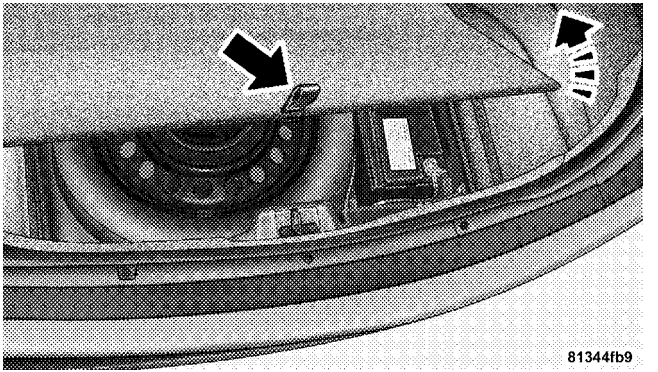

Opening The Access Panel

3. Remove the fastener securing the spare tire.

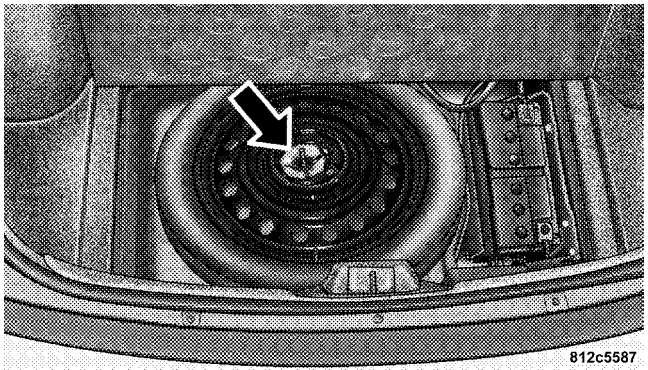

Spare Tire Fastener

4. Remove the spare tire.
5. Remove the fastener securing the jack.

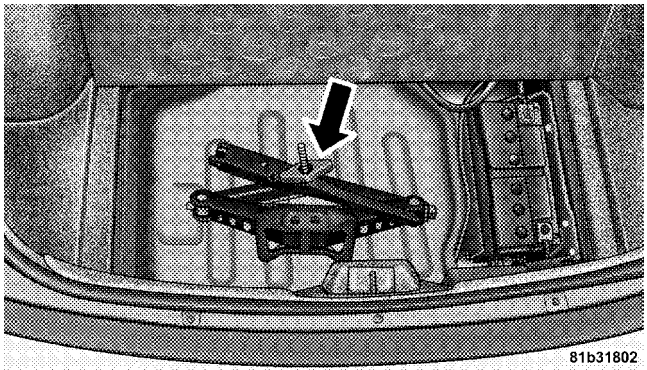

Jack Fastener

WARNING!

A loose tire or jack thrown forward in a collision or hard stop could endanger the occupants of the vehicle. Always stow the jack parts and the spare tire in the places provided.

Preparations For Jacking

6. Park the vehicle on a firm level surface as far from the edge of the roadway as possible. Avoid icy or slippery areas.

7. Set the parking brake.

8. Place the shift lever into PARK.

9. Turn OFF the ignition.

10. Turn on the Hazard Warning flashers.

11. Block the front and rear of the wheel diagonally opposite of the jacking position. For example, if changing the right front tire, block the left rear wheel.

NOTE: Passengers should not remain in the vehicle when the vehicle is being jacked.

Jacking and Changing a Tire

WARNING!

Carefully follow these tire changing warnings to help prevent personal injury or damage to your vehicle:

- **Always park on a firm, level surface as far from the edge of the roadway as possible before raising the vehicle.**
- **Block the wheel diagonally opposite the wheel to be raised.**
- **Set the parking brake firmly and set an automatic transmission in PARK; a manual transmission in REVERSE.**

(Continued)

WARNING! (Continued)

- **Never start or run the engine with the vehicle on a jack.**
- **Do not let anyone sit in the vehicle when it is on a jack.**
- **Do not get under the vehicle when it is on a jack.**
- **Only use the jack in the positions indicated and for lifting this vehicle during a tire change.**
- **If working on or near a roadway, be extremely careful of motor traffic.**
- **To assure that spare tires, flat or inflated are securely stowed, spares must be stowed with the valve stem facing the ground.**
- **Turn on the Hazard Warning flasher.**

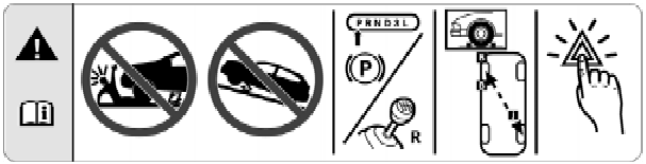

Jack Warning Label

1. Remove the spare tire, jack, and lug wrench.

2. If equipped with steel wheels, do not remove the wheel cover at this time. If equipped with aluminum wheels where the center cap covers the lug nuts, use the lug wrench to pry the center cap off carefully before raising the vehicle.

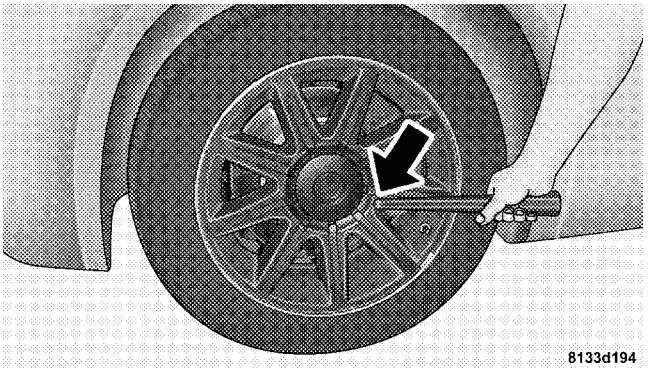

Center Cap Removal

WARNING!

To avoid possible personal injury, handle the wheel covers with care to avoid contact with the metal edges and retention teeth.

3. Before raising the vehicle, use the lug wrench to loosen, but not remove, the lug nuts on the wheel with the flat tire. Turn the lug nuts counterclockwise one turn while the wheel is still on the ground.

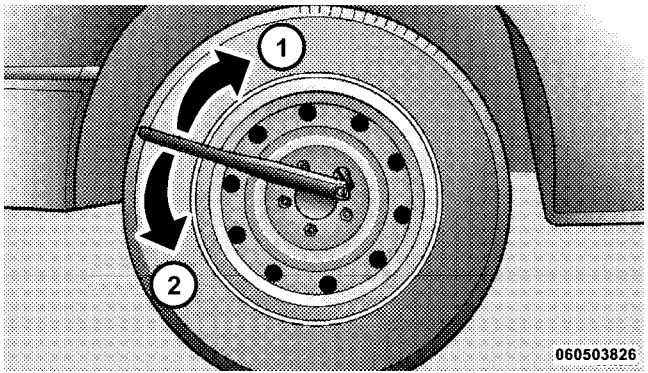

Lug Nut Removal/Installation

1 — Tighten
2 — Loosen

4. Place the jack underneath the lift area that is closest to the flat tire. Turn the jack screw clockwise to firmly engage the jack saddle with the lift area of the sill flange.

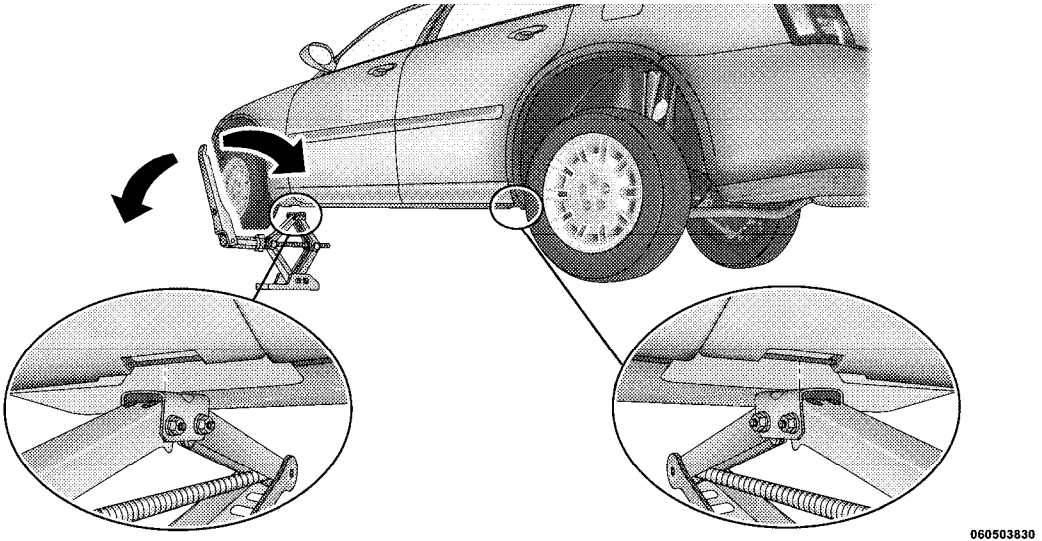

Jack Engagement Locations

5. Raise the vehicle just enough to remove the flat tire and install the spare tire.

WARNING!

Raising the vehicle higher than necessary can make the vehicle less stable. It could slip off the jack and hurt someone near it. Raise the vehicle only enough to remove the tire.

6. Remove the lug nuts, wheel cover (if equipped), and tire. Remove the cover by hand. Do not pry it off.

7. Mount the spare tire.

NOTE: For vehicles so equipped, do not attempt to install a center cap or wheel cover on the compact spare. However, when reinstalling the road tire, follow the procedure under "Wheel Cover or Center Cap Installation" in place of the remaining steps in this procedure.

8. Install the lug nuts with the cone shaped end of the nut toward the wheel. Lightly tighten the lug nuts. To avoid the risk of forcing the vehicle off the jack, do not tighten the lug nuts fully until the vehicle is lowered to the ground.

9. Lower the vehicle to the ground by turning the jack handle counterclockwise.

10. Finish tightening the lug nuts. Push down on the wrench while tightening for increased leverage. Alternate lug nuts until each nut has been tightened twice. The correct tightness of each lug nut is 100 ft/lb. (135 N·m). If in doubt about the correct tightness, have them checked with a torque wrench by your authorized dealer or at a service station.

11. Stow the jack, tools and flat tire. Make sure the base of the jack faces the rear of the vehicle before tightening down the fastener.

WARNING!

A loose tire or jack thrown forward in a collision or hard stop could endanger the occupants of the vehicle. Always stow the jack parts and the spare tire in the places provided.

Compact Spare Tire

The compact spare tire is for temporary emergency use with radial tires. It is engineered to be used on your style vehicle only. Since this tire has limited tread life, the original tire should be repaired (or replaced) and reinstalled at the first opportunity.

- Keep tire inflated to 60 psi (414 KPa) cold inflation pressure.
- This tire is designed as an emergency spare only. Do not exceed 50 mph (80 km/h) speed.

WARNING!

The limited-use spare tires are for emergency use only. Installation of this limited-use spare tire affects vehicle handling. With this tire, do not drive more than 60 mph (100 km/h). Keep inflated to the cold tire inflation pressure listed on either your tire placard or limited-use spare tire and wheel assembly. Replace (or repair) the original tire at the first opportunity and reinstall it on your vehicle. Failure to do so could result in loss of vehicle control.

Wheel Cover or Center Cap Installation (If Equipped)

NOTE: Do not attempt to install a center cap or wheel cover on the compact spare.

1. Mount the road tire on the axle. For vehicles equipped with wheel covers, perform Steps 2 and 3. For vehicles equipped with center caps, proceed to Step 4.

2. Install two lug nuts on the mounting studs, which are on each side of the stud that is in alignment with the valve stem. Install the lug nuts with the cone shaped end of the nut toward the wheel. Lightly tighten the lug nuts. To avoid the risk of forcing the vehicle off the jack, do not tighten the lug nuts fully until the vehicle is lowered to the ground.

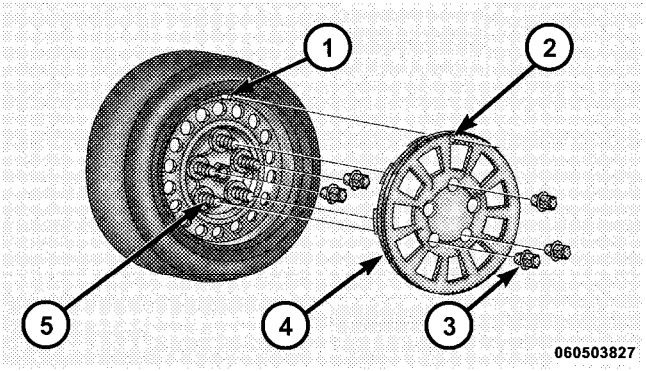

Tire and Wheel Cover Or Center Cap

1 — Valve Stem	4 — Wheel Cover
2 — Valve Notch	5 — Mounting Stud
3 — Wheel Lug Nut	

3. Align the valve notch in the wheel cover with the valve stem on the wheel. Install the cover by hand,

snapping the cover over the two lug nuts. Do not use a hammer or excessive force to install the cover.

4. Install the remaining lug nuts with the cone shaped end of the nut toward the wheel. Lightly tighten the lug nuts. To avoid the risk of forcing the vehicle off the jack, do not tighten the lug nuts fully until the vehicle is lowered to the ground.

5. Lower the vehicle to the ground by turning the jack handle counterclockwise.

6. Finish tightening the lug nuts. Push down on the wrench while tightening for increased leverage. Alternate lug nuts until each nut has been tightened twice. The correct tightness of each lug nut is 100 ft/lb. (135 N·m). If in doubt about the correct tightness, have them checked with a torque wrench by your authorized dealer or at a service station.

7. For vehicles equipped with center caps, install the center cap by hand. Do not use a hammer or excessive force to install the center cap.

8. Stow the jack, tools, and spare tire. Make sure the base of the jack faces the rear of the vehicle before tightening down the fastener.

WARNING!

A loose tire or jack thrown forward in a collision or hard stop could endanger the occupants of the vehicle. Always stow the jack parts and the spare tire in the places provided.

JUMP-STARTING PROCEDURES

WARNING!

- **Take care to avoid the radiator cooling fan whenever the hood is raised. It can start anytime the ignition switch is ON. You can be hurt by the fan.**
- **Do not attempt to push or tow your vehicle to get it started. Vehicles equipped with an automatic transmission cannot be started this way. Unburned fuel could enter the catalytic converter and once the engine has started, ignite and damage the converter and vehicle. If the vehicle has a discharged battery, booster cables may be used to obtain a start from another vehicle. This type of start can be dangerous if done improperly, so follow this procedure carefully.**

(Continued)

WARNING! (Continued)

- **Battery fluid is a corrosive acid solution; do not allow battery fluid to contact eyes, skin, or clothing. Don't lean over battery when attaching clamps or allow the clamps to touch each other. If acid splashes in eyes or on skin, flush contaminated area immediately with large quantities of water.**
- **A battery generates hydrogen gas, which is flammable and explosive. Keep flame or spark away from the vent holes.**
- **Do not use a booster battery or any other booster source with an output that exceeds 12-Volts.**
- **The battery in this vehicle has a vent hose that should not be disconnected and should only be replaced with a battery of the same type (vented).**

NOTE: The battery is stored under an access cover in the trunk. Remote battery terminals are located in the engine compartment for jump-starting.

1. Wear eye protection and remove any metal jewelry such as watchbands or bracelets that might make an inadvertent electrical contact.

2. When boost is provided by a battery in another vehicle, park that vehicle within booster cable reach, but do not allow the vehicles to touch one another.

WARNING!

Do not permit vehicles to touch each other as this could establish a ground connection and personal injury could result.

3. Set the parking brake, place the automatic transmission in PARK, and turn the ignition switch to the LOCK position on both vehicles.

4. Turn off the heater, radio, and all unnecessary electrical loads.

5. Connect one end of the jumper cable to the remote jump-start positive battery post **(+)** in the engine compartment. Connect the other end of the same cable to the positive terminal of the booster battery. Refer to the following illustration for jump-starting connections.

6. Connect the other cable, first to the negative terminal of the booster battery and **then to the engine ground (-) of the vehicle with the discharged battery.** Make sure you have a good contact on the engine ground. Refer to the following illustration for jump-starting connections.

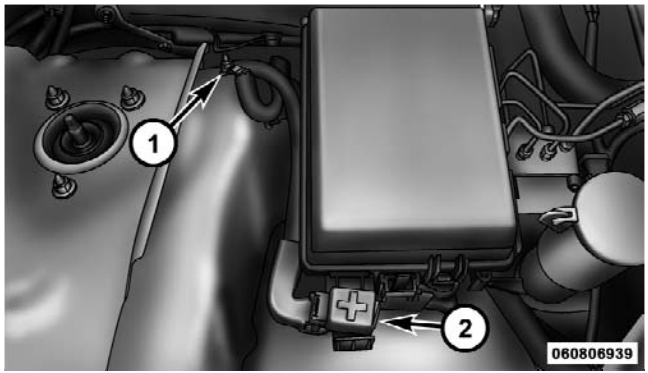

Jump-Starting

1 — Engine Ground
2 — Positive Battery Post

WARNING!

- **You should not try to start your vehicle by pushing or towing.**
- **Do not connect the cable to the negative post of the discharged battery. The resulting electrical spark could cause the battery to explode.**
- **During cold weather when temperatures are below the freezing point, electrolyte in a discharged battery may freeze. Do not attempt jump-starting because the battery could rupture or explode. The battery temperature must be brought above the freezing point before attempting jump-start.**

7. Start the engine in the vehicle that has the booster battery. Let the engine idle a few minutes then start the engine in the vehicle with the discharged battery.

NOTE: Refer to "Synchronizing ESP" under "Electronic Stability Program" in Section 5 if the ESP/BAS light (in

the instrument cluster) remains on continuously after starting the engine of the vehicle with the discharged battery.

8. When removing the jumper cables, reverse the above sequence exactly. Be careful of the moving belts and fan.

WARNING!

Any procedure other than above could result in:

- **Personal injury caused by electrolyte squirting out the battery vent**
- **Personal injury or property damage due to battery explosion**
- **Damage to charging system of booster vehicle or of immobilized vehicle**

FREEING A STUCK VEHICLE

If your vehicle becomes stuck in mud, sand, or snow, it can often be moved by a rocking motion. Turn your steering wheel right and left to clear the area around the front wheels. Then shift back and forth between REVERSE and DRIVE. Usually, the least accelerator pedal pressure to maintain the rocking motion without spinning the wheels is most effective.

NOTE: Turn OFF the Electronic Stability Program (ESP) — if equipped, or Traction Control System (TCS) — if equipped before rocking the vehicle. Refer to "Electronic Stability Program" or "Traction Control System" in Section 5.

CAUTION!

- When "rocking" a stuck vehicle by moving between 1st and REVERSE, do not spin the wheels faster than 15 mph (24 km/h), or drivetrain damage may result.
- Racing the engine or spinning the wheels too fast may lead to transmission overheating and failure. It can also damage the tires. Do not spin the wheels above 35 mph (55 km/h).

WARNING!

Fast spinning tires can be dangerous. Forces generated by excessive wheel speeds may cause tire damage or failure. A tire could explode and injure someone. Do not spin your vehicle's wheels faster than 35 mph (55 km/h) when you are stuck, and don't let anyone near a spinning wheel, no matter what the speed.

TOWING A DISABLED VEHICLE

Without The Ignition Key

Special care must be taken when the vehicle is towed with the ignition in the LOCK position. The only approved method of towing without the ignition key is with a flatbed truck. Proper towing equipment is necessary to prevent damage to the vehicle.

Towing This Vehicle Behind Another Vehicle

Flatbed towing is recommended. DO NOT tow an AWD vehicle with the rear wheels on the ground unless the rear driveshaft is removed and the transmission is in NEUTRAL.

Vehicles WITHOUT AWD may be towed (with rear wheels on the ground) with the transmission in NEUTRAL under the following conditions:

- The distance to be traveled must not exceed 15 miles (24 km).
- The towing speed must not exceed 30 mph (48 km/h).

CAUTION!

Exceeding these towing limits may cause transmission failure.

Vehicles equipped with AWD can be towed with the transmission in NEUTRAL and the rear wheels OFF the ground (or the rear driveshaft removed) with no limitation on speed or distance.

CAUTION!

- **Do not attempt to tow this vehicle from the front with sling type towing equipment. Damage to the front fascia will result.**

(Continued)

CAUTION! (Continued)

- **If the transmission is not operative or if the vehicle is to be towed more than 15 miles (24 km), then the only approved method of towing is with a flatbed truck. Otherwise, damage to the transmission may result.**
- **Do not tow the vehicle from the rear. Damage to the rear sheet metal and fascia will occur.**
- **Do not push or tow this vehicle with another vehicle as damage to the bumper fascia and transmission may result.**

If you must use the accessories (wipers, defrosters, etc.) while being towed, the key must be in the ON position, not the ACC position. Make certain the transmission remains in NEUTRAL.

Towing This Vehicle Behind Another Vehicle With A Tow Dolly

The manufacturer **does not recommend** that you tow this vehicle on a tow dolly. Vehicle damage may occur.

MAINTAINING YOUR VEHICLE

CONTENTS

- Engine Compartment — 2.7L 379
- Engine Compartment — 3.5L 380
- Engine Compartment — 5.7L 381
- Onboard Diagnostic System — OBD II 382
  - Loose Fuel Filler Cap 382
- Emissions Inspection And Maintenance Programs 383
- Replacement Parts 384
- Dealer Service 385
- Maintenance Procedures 385
  - Engine Oil 385
  - Engine Oil Filter 388
  - Engine Air Cleaner Filter 389
  - Maintenance-Free Battery 389
  - Air Conditioner Maintenance 391
  - A/C Air Filter 392
  - Body Lubrication 392
  - Windshield Wiper Blades 393

- Windshield Washers 393
- Exhaust System 394
- Cooling System 397
- Brake System 402
- Automatic Transmission 404
- All Wheel Drive (AWD) — If Equipped 405
- Appearance Care And Protection From Corrosion 406

■ Fuses 411
- Integrated Power Module 411
- Rear Power Distribution Center 413

■ Vehicle Storage 418

■ Replacement Light Bulbs 418

■ Bulb Replacement 419
- Low Beam Headlight, High Beam Headlight, Park/Turn Light, And Front Side Marker Light — Models With Halogen Headlights . . 419
- Low Beam Headlight, High Beam Headlight, And Park/Turn Light — Models With High Intensity Discharge Headlights (HID) 422
- Backup Light, Side Marker Light, Tail/Turn Light, And Tail/Stop Light 423
- License Light 426

■ Fluids And Capacities 427

■ Fluids, Lubricants, And Genuine Parts 429
- Engine 429
- Chassis 430

ENGINE COMPARTMENT — 2.7L

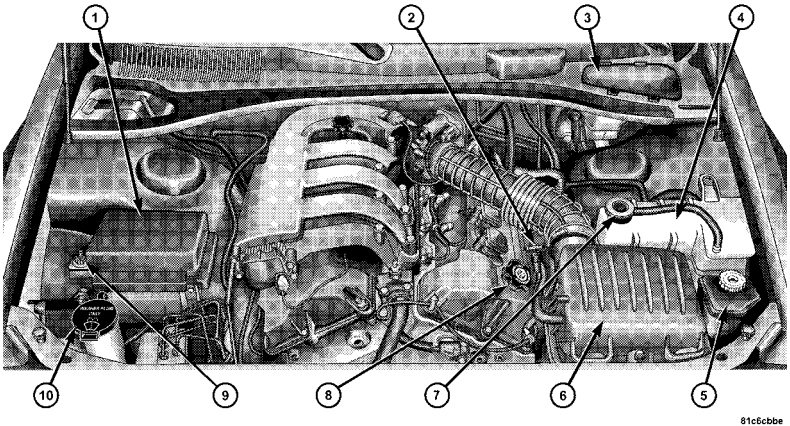

1 — Integrated Power Module
2 — Engine Oil Dipstick
3 — Brake Fluid Reservoir Access Cover
4 — Engine Coolant Reservoir
5 — Power Steering Fluid Reservoir
6 — Air Cleaner Filter
7 — Coolant Pressure Cap
8 — Engine Oil Fill
9 — Remote Jump-Start Positive Battery Post
10 — Washer Fluid Reservoir

ENGINE COMPARTMENT — 3.5L

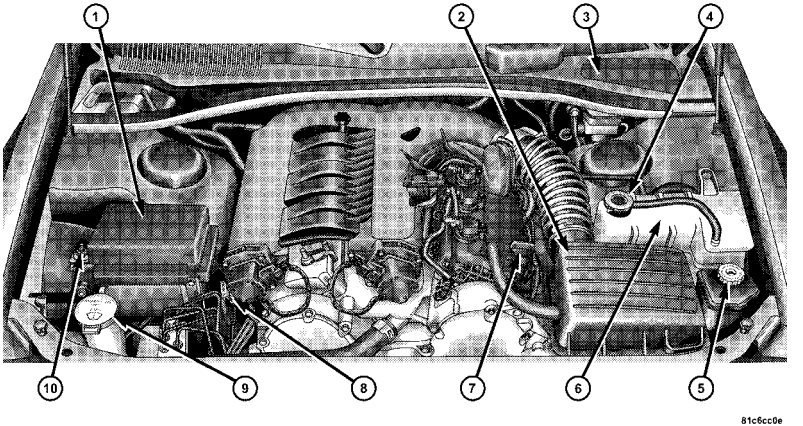

1 — Integrated Power Module
2 — Air Cleaner Filter
3 — Brake Fluid Reservoir Access Cover
4 — Coolant Pressure Cap
5 — Power Steering Fluid Reservoir
6 — Engine Coolant Reservoir
7 — Engine Oil Fill
8 — Engine Oil Dipstick
9 — Washer Fluid Reservoir
10 — Remote Jump-Start Positive Battery Post

ENGINE COMPARTMENT — 5.7L

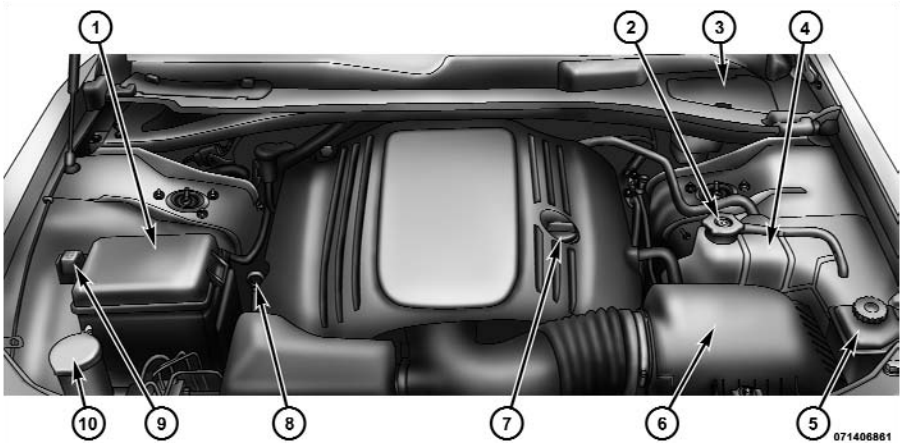

1 — Integrated Power Module
2 — Coolant Pressure Cap
3 — Brake Fluid Reservoir Access Cover
4 — Engine Coolant Reservoir
5 — Power Steering Fluid Reservoir
6 — Air Cleaner Filter
7 — Engine Oil Fill
8 — Engine Oil Dipstick
9 — Remote Jump-Start Positive Battery Post
10 — Washer Fluid Reservoir

ONBOARD DIAGNOSTIC SYSTEM — OBD II

Your vehicle is equipped with a sophisticated onboard diagnostic system called OBD II. This system monitors the performance of the emissions, engine, and automatic transmission control systems. When these systems are operating properly, your vehicle will provide excellent performance and fuel economy, as well as engine emissions well within current government regulations.

If any of these systems require service, the OBD II system will turn on the Malfunction Indicator Light (MIL). It will also store diagnostic codes and other information to assist your service technician in making repairs. Although your vehicle will usually be drivable and not need towing, see your authorized dealer for service as soon as possible.

CAUTION!

Prolonged driving with the MIL on could cause further damage to the emissions control system. It could also affect fuel economy and driveability. The vehicle must be serviced before any emissions tests can be performed.

If the MIL is flashing while the engine is running, severe catalytic converter damage and power loss will soon occur. Immediate service is required.

Loose Fuel Filler Cap

If the vehicle diagnostic system determines that the fuel filler cap is loose, improperly installed, or damaged, a “Check Gascap” message will display in the Electronic Vehicle Information Center (EVIC) (if equipped). If this occurs, tighten the fuel filler cap properly and press the

TRIP ODOMETER button to turn off the message. If the problem continues, the message will appear the next time the vehicle is started.

A loose, improperly installed, or damaged fuel filler cap may also turn on the MIL.

EMISSIONS INSPECTION AND MAINTENANCE PROGRAMS

In some localities, it may be a legal requirement to pass an inspection of your vehicle's emissions control system. Failure to pass could prevent vehicle registration.

For states that require an Inspection and Maintenance (I/M), this check verifies the Malfunction Indicator Light (MIL) is functioning and is not on when the engine is running, and that the OBD II system is ready for testing.

Normally, the OBD II system will be ready. The OBD II system may **not** be ready if your vehicle was recently serviced, recently had a dead battery or a battery replacement. If the OBD II system should be determined not ready for the I/M test, your vehicle may fail the test.

Your vehicle has a simple ignition key-actuated test, which you can use prior to going to the test station. To check if your vehicle's OBD II system is ready, you must do the following:

1. Insert your ignition key into the ignition switch.

2. Turn the ignition to the ON position, but do not crank or start the engine.

3. If you crank or start the engine, you will have to start this test over.

4. As soon as you turn your key to the ON position, you will see the MIL symbol come on as part of a normal bulb check.

5. Approximately 15 seconds later, one of two things will happen:

a. The MIL will flash for about 10 seconds and then return to being fully illuminated until you turn OFF the ignition or start the engine. This means that your vehicle's OBD II system is **not ready** and you should **not** proceed to the I/M station.

b. The MIL will not flash at all and will remain fully illuminated until you turn OFF the ignition or start the engine. This means that your vehicle's OBD II system is **ready** and you can proceed to the I/M station.

If your OBD II system is **not ready,** you should see your authorized dealer or repair facility. If your vehicle was recently serviced or had a battery failure or replacement, you may need to do nothing more than drive your vehicle as you normally would in order for your OBD II system to update. A recheck with the above test routine may then indicate that the system is now ready.

Regardless of whether your vehicle's OBD II system is ready or not, if the MIL is illuminated during normal vehicle operation you should have your vehicle serviced before going to the I/M station. The I/M station can fail your vehicle because the MIL is on with the engine running.

REPLACEMENT PARTS

Use of genuine MOPAR® parts for normal/scheduled maintenance and repairs is highly recommended to ensure the designed performance. Damage or failures caused by the use of non-MOPAR® parts for maintenance and repairs will not be covered by the manufacturer's warranty.

DEALER SERVICE

Your authorized dealer has the qualified service personnel, special tools, and equipment to perform all service operations in an expert manner. Service Manuals are available which include detailed service information for your vehicle. Refer to these manuals before attempting any procedure yourself.

NOTE: Intentional tampering with emissions control systems can result in civil penalties being assessed against you.

WARNING!

You can be badly injured working on or around a motor vehicle. Only do service work for which you have the knowledge and the proper equipment. If you have any doubt about your ability to perform a service job, take your vehicle to a competent mechanic.

MAINTENANCE PROCEDURES

The pages that follow contain the **required** maintenance services determined by the engineers who designed your vehicle.

Besides the maintenance items for which there are fixed maintenance intervals, there are other items that should operate satisfactorily without periodic maintenance. However, if a malfunction of these items does occur, it could adversely affect the engine or vehicle performance. These items should be inspected if a malfunction is observed or suspected.

Engine Oil

Checking Oil Level — 2.7L and 3.5L Engines

To assure proper engine lubrication, the engine oil must be maintained at the correct level. Check the oil level at regular intervals, such as every fuel stop.

The best time to check the engine oil level is about five minutes after a fully warmed engine is shut off.

Checking the oil while the vehicle is on level ground will improve the accuracy of the oil level readings. Maintain the oil level between the MIN and MAX markings on the dipstick. Adding 1.0 qt (1.0 L) of oil when the reading is at the MIN mark will result in a MAX reading on these engines.

CAUTION!

Overfilling or underfilling will cause oil aeration or loss of oil pressure. This could damage your engine.

Checking Oil Level — 5.7L Engine

To assure proper engine lubrication, the engine oil must be maintained at the correct level. Check the oil level at regular intervals, such as every fuel stop.

The best time to check the engine oil level is about five minutes after a fully warmed engine is shut off.

Checking the oil while the vehicle is on level ground will improve the accuracy of the oil level readings. Maintain the oil level in the “SAFE” range. Adding 1.0 qt (1.0 L) of oil when the reading is at the bottom of the “SAFE” range will result in an oil level at the top of the “SAFE” range on these engines.

CAUTION!

Overfilling or underfilling will cause oil aeration or loss of oil pressure. This could damage your engine.

Change Engine Oil

The oil change indicator system will remind you that it is time to take your vehicle in for scheduled maintenance. Refer to the “Maintenance Schedule” in Section 8 for information on this system.

NOTE: Under no circumstances should oil change intervals exceed 6,000 miles (10 000 km) or six months, whichever occurs first.

Engine Oil Selection

For best performance and maximum protection under all types of operating conditions, the manufacturer only recommends engine oils that are API Certified and meet the requirements of Chrysler Material Standard MS-6395.

American Petroleum Institute (API) Engine Oil Identification Symbol

This symbol means that the oil has been certified by the American Petroleum Institute (API). The manufacturer only recommends API Certified engine oils.

Engine Oil Viscosity (SAE Grade) — 2.7L and 5.7L Engines

SAE 5W-20 engine oil is recommended for all operating temperatures. This engine oil improves low temperature starting and vehicle fuel economy.

The engine oil filler cap also shows the recommended engine oil viscosity for your engine. For information on engine oil filler cap location, refer to “Engine Compartment” in this section.

Lubricants that do not have both, the engine oil certification mark and the correct SAE viscosity grade number should not be used.

Engine Oil Viscosity (SAE Grade) — 3.5L Engine

SAE 10W-30 engine oil is recommended for all operating temperatures.

The engine oil filler cap also shows the recommended engine oil viscosity for your engine. For information on engine oil filler cap location, refer to "Engine Compartment" in this section.

Lubricants that do not have both, the engine oil certification mark and the correct SAE viscosity grade number should not be used.

Synthetic Engine Oils

You may use synthetic engine oils provided the recommended oil quality requirements are met, and the recommended maintenance intervals for oil and filter changes are followed.

Materials Added to Engine Oil

Do not add any supplemental materials, other than leak detection dyes, to the engine oil. Engine oil is an engineered product and its performance may be impaired by supplemental additives.

Disposing of Used Engine Oil and Oil Filters

Care should be taken in disposing of used engine oil and oil filters from your vehicle. Used oil and oil filters, indiscriminately discarded, can present a problem to the environment. Contact your authorized dealer, service station, or governmental agency for advice on how and where used oil and oil filters can be safely discarded in your area.

Engine Oil Filter

The engine oil filter should be replaced at every engine oil change.

Engine Oil Filter Selection

This manufacturer's engines have a full-flow type oil filter. Use a filter of this type for replacement. The quality of replacement filters varies considerably. Only high quality filters should be used to assure most efficient service. MOPAR® engine oil filters are a high quality oil filter and are recommended.

Engine Air Cleaner Filter

Refer to the "Maintenance Schedule" in Section 8 for proper maintenance intervals.

WARNING!

The air induction system (air cleaner, hoses, etc.) can provide a measure of protection in the case of engine backfire. Do not remove the air induction system (air cleaner, hoses, etc.) unless such removal is necessary for repair or maintenance. Make sure that no one is near the engine compartment before starting the vehicle with the air induction system (air cleaner, hoses, etc.) removed. Failure to do so can result in serious personal injury.

Engine Air Cleaner Filter Selection

The quality of replacement engine air cleaner filters varies considerably. Only high quality filters should be used to assure most efficient service. MOPAR® engine air cleaner filters are a high quality filter and are recommended.

Maintenance-Free Battery

The top of the maintenance-free battery is permanently sealed. You will never have to add water, nor is periodic maintenance required.

NOTE: The battery is stored under an access cover in the trunk. Remote battery terminals are located in the engine compartment for jump-starting.

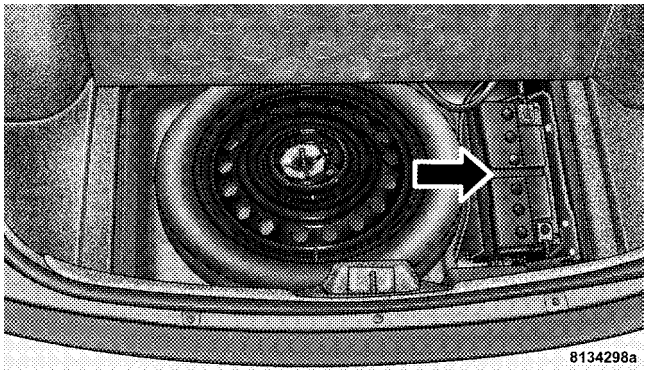

Battery Location

WARNING!

- **Battery fluid is a corrosive acid solution and can burn or even blind you. Don't allow battery fluid to contact your eyes, skin, or clothing. Don't lean over a battery when attaching clamps. If acid splashes in eyes or on skin, flush the area immediately with large amounts of water.**
- **Battery gas is flammable and explosive. Keep flame or sparks away from the battery. Don't use a booster battery or any other booster source with an output greater than 12 Volts. Don't allow cable clamps to touch each other.**
- **Battery posts, terminals, and related accessories contain lead and lead compounds. Wash hands after handling.**

(Continued)

WARNING! (Continued)

- **The battery in this vehicle has a vent hose that should not be disconnected and should only be replaced with a battery of the same type (vented).**

CAUTION!

- **It is essential when replacing the cables on the battery that the positive cable is attached to the positive post and the negative cable is attached to the negative post. Battery posts are marked positive (+) and negative (-) and identified on the battery case. Cable clamps should be tight on the terminal posts and free of corrosion.**
- **If a "fast charger" is used while the battery is in the vehicle, disconnect both vehicle battery cables before connecting the charger to the battery. Do not use a "fast charger" to provide starting voltage.**

Air Conditioner Maintenance

For best possible performance, your air conditioner should be checked and serviced by an authorized dealer at the start of each warm season. This service should include cleaning of the condenser fins and a performance test. Drive belt tension should also be checked at this time.

WARNING!

- **Use only refrigerants and compressor lubricants approved by the manufacturer for your air conditioning system. Some unapproved refrigerants are flammable and can explode, injuring you. Other unapproved refrigerants or lubricants can cause the system to fail, requiring costly repairs. Refer to Section 3 of the Warranty Information book for further warranty information.**

(Continued)

WARNING! (Continued)

- **The air conditioning system contains refrigerant under high pressure. To avoid risk of personal injury or damage to the system, adding refrigerant or any repair requiring lines to be disconnected should be done by an experienced technician.**

Refrigerant Recovery and Recycling

R-134a Air Conditioning Refrigerant is a hydrofluorocarbon (HFC) that is endorsed by the Environmental Protection Agency and is an ozone-saving product. However, the manufacturer recommends that air conditioning service be performed by authorized dealers or other service facilities using recovery and recycling equipment.

NOTE: Use only manufacturer approved A/C System Sealers, Stop Leak Products, Seal Conditioners, Compressor Oil, and Refrigerants.

A/C Air Filter

The filter is located in the fresh air inlet under the hood, behind a removable panel in the cowl on the passenger side of the vehicle, next to the windshield wipers. When installing a new filter, ensure its proper orientation. To replace the filter, remove the access door in the cowl screen by pressing the retaining clips. Slide the lid on the filter adapter forward and down and remove the used filter. Install the new filter with arrows pointing in the direction of airflow, which is toward the rear of the vehicle (text and arrows on the filter indicate this).

Refer to the “Maintenance Schedule” in Section 8 for proper maintenance intervals.

Body Lubrication

Locks and all body pivot points, including such items as seat tracks, door hinge pivot points and rollers, liftgate, tailgate, sliding doors and hood hinges, should be lubricated periodically with a lithium based grease such as

MOPAR® Spray White Lube to assure quiet, easy operation and to protect against rust and wear. Prior to the application of any lubricant, the parts concerned should be wiped clean to remove dust and grit; after lubricating excess oil and grease should be removed. Particular attention should also be given to hood latching components to insure proper function. When performing other underhood services, the hood latch, release mechanism and safety catch should be cleaned and lubricated.

The external lock cylinders should be lubricated twice a year, preferably in the Fall and Spring. Apply a small amount of a high quality lubricant such as MOPAR® Lock Cylinder Lubricant directly into the lock cylinder.

Windshield Wiper Blades

Clean the rubber edges of the wiper blades and the windshield periodically with a sponge or soft cloth and a mild nonabrasive cleaner. This will remove accumulations of salt or road film.

Operation of the wipers on dry glass for long periods may cause deterioration of the wiper blades. Always use washer fluid when using the wipers to remove salt or dirt from a dry windshield.

Avoid using the wiper blades to remove frost or ice from the windshield. Keep the blade rubber out of contact with petroleum products such as engine oil, gasoline, etc.

Windshield Washers

The windshield washer fluid reservoir is located in the front of the engine compartment. Be sure to check the fluid level at regular intervals. Fill the reservoir with windshield washer solvent (not radiator antifreeze) and operate the system for a few seconds to flush out the residual water.

When refilling the washer fluid reservoir, apply some washer fluid to a cloth or towel and wipe the wiper blades clean. This will help blade performance.

To prevent freeze-up of your windshield washer system in cold weather, select a solution or mixture that meets or exceeds the temperature range of your climate. This rating information can be found on most washer fluid containers.

The fluid reservoir will hold nearly 1 gal (4 L) of washer fluid when the message "Low Washer Fluid" appears in the Electronic Vehicle Information Center (EVIC) (if equipped).

WARNING!

Commercially available windshield washer solvents are flammable. They could ignite and burn you. Care must be exercised when filling or working around the washer solution.

Exhaust System

The best protection against carbon monoxide entry into the vehicle body is a properly maintained engine exhaust system.

Whenever a change is noticed in the sound of the exhaust system, when exhaust fumes can be detected inside the vehicle, or when the underside or rear of the vehicle is damaged, have a competent mechanic inspect the complete exhaust system and adjacent body areas for broken, damaged, deteriorated, or mispositioned parts. Open seams or loose connections could permit exhaust fumes to seep into the passenger compartment. In addition, inspect the exhaust system each time the vehicle is raised for lubrication or oil change. Replace as required.

WARNING!

Exhaust gases can injure or kill. They contain carbon monoxide (CO), which is colorless and odorless. Breathing it can make you unconscious and can eventually poison you. To avoid breathing CO, refer to "Exhaust Gas" under "Safety Tips" in Section 2.

The catalytic converter requires the use of unleaded fuel only. Leaded gasoline will destroy the effectiveness of the catalyst as an emissions control device.

Under normal operating conditions, the catalytic converter will not require maintenance. However, it is important to keep the engine properly tuned to assure proper catalyst operation and prevent possible catalyst damage.

CAUTION!

Damage to the catalytic converter can result if your vehicle is not kept in proper operating condition. In the event of engine malfunction, particularly involving engine misfire or other apparent loss of performance, have your vehicle serviced promptly. Continued operation of your vehicle with a severe malfunction could cause the converter to overheat, resulting in possible damage to the converter and the vehicle.

NOTE: Intentional tampering with emissions control systems can result in civil penalties being assessed against you.

WARNING!

A hot exhaust system can start a fire if you park over materials that can burn. Such materials might be grass or leaves coming into contact with your exhaust system. Do not park or operate your vehicle in areas where your exhaust system can contact anything that can burn.

In unusual situations involving grossly malfunctioning engine operation, a scorching odor may indicate severe and abnormal catalyst overheating. If this should occur, safely bring the vehicle to a complete stop, shut the engine OFF, and allow the vehicle to cool. Thereafter, obtain service, including a tune-up to manufacturer's specifications immediately.

To minimize the possibility of catalyst damage:

- Do not shut off the engine or interrupt the ignition when the transmission is in gear and the vehicle is in motion.
- Do not try to start the engine by pushing or towing the vehicle.
- Do not idle the engine with any spark plug wires disconnected or removed, such as when diagnostic testing, or for prolonged periods during very rough idling or malfunctioning operating conditions.

Cooling System

WARNING!

- **When working near the radiator cooling fan, disconnect the fan motor lead or turn the ignition switch to the LOCK position. The fan is temperature controlled and can start at any time the ignition switch is in the ON position.**
- **You or others can be badly burned by hot engine coolant (antifreeze) or steam from your radiator. If you see or hear steam coming from under the hood, do not open the hood until the radiator has had time to cool. Never try to open a cooling system pressure cap when the radiator is hot.**

Coolant Checks

Check engine coolant (antifreeze) protection every 12 months (before the onset of freezing weather, where applicable). If the engine coolant (antifreeze) is dirty or rusty in appearance, the system should be drained, flushed, and refilled with fresh coolant. Check the front of the radiator for any accumulation of bugs, leaves, etc. If dirty, clean by gently spraying water from a garden hose vertically down the face of the condenser.

Check the coolant recovery bottle tubing for brittle rubber, cracking, tears, cuts, and tightness of the connection at the bottle and radiator. Inspect the entire system for leaks.

With the engine at normal operating temperature (but not running), check the cooling system pressure cap for proper vacuum sealing by draining a small amount of engine coolant (antifreeze) from the radiator drain cock. If the cap is sealing properly, the engine coolant (antifreeze) will begin to drain from the coolant recovery bottle. DO NOT REMOVE THE COOLANT PRESSURE CAP WHEN THE COOLING SYSTEM IS HOT.

Cooling System — Drain, Flush, and Refill

If the engine coolant (antifreeze) is dirty or contains a considerable amount of sediment, clean and flush with a reliable cooling system cleaner. Follow with a thorough rinsing to remove all deposits and chemicals. Properly dispose of the old engine coolant (antifreeze) solution.

Refer to the "Maintenance Schedule" in Section 8 for proper maintenance intervals.

Selection of Coolant

Use only the manufacturer's recommended engine coolant (antifreeze). Refer to "Fluids, Lubricants, and Genuine Parts" in this section for the correct fluid type.

CAUTION!

- **Mixing of engine coolant (antifreeze) other than specified HOAT engine coolant (antifreeze), may result in engine damage and may decrease corrosion protection. If a non-HOAT engine coolant (antifreeze) is introduced into the cooling system in an emergency, it should be replaced with the specified engine coolant (antifreeze) as soon as possible.**
- **Do not use water alone or alcohol-based engine coolant (antifreeze) products. Do not use additional rust inhibitors or antirust products, as they may not be compatible with the radiator engine coolant (antifreeze) and may plug the radiator.**

(Continued)

CAUTION! (Continued)

- **This vehicle has not been designed for use with propylene glycol-based engine coolant (antifreeze). Use of propylene glycol-based engine coolant (antifreeze) is not recommended.**

Adding Coolant

Your vehicle has been built with an improved engine coolant (antifreeze) that allows extended maintenance intervals. This engine coolant (antifreeze) can be used up to five years or 102,000 miles (170 000 km) before replacement. To prevent reducing this extended maintenance period, it is important that you use the same engine coolant (antifreeze) throughout the life of your vehicle. Please review these recommendations for using Hybrid Organic Additive Technology (HOAT) engine coolant (antifreeze).

When adding engine coolant (antifreeze):

- The manufacturer recommends using MOPAR® Antifreeze/Coolant 5 Year/100,000 Mile Formula HOAT (Hybrid Organic Additive Technology).
- Mix a minimum solution of 50% HOAT engine coolant (antifreeze) and distilled water. Use higher concentrations (not to exceed 70%) if temperatures below −34°F (−37°C) are anticipated.
- Use only high purity water such as distilled or deionized water when mixing the water/engine coolant (antifreeze) solution. The use of lower quality water will reduce the amount of corrosion protection in the engine cooling system.

Please note that it is the owner's responsibility to maintain the proper level of protection against freezing according to the temperatures occurring in the area where the vehicle is operated.

NOTE: Mixing engine coolant (antifreeze) types will decrease the life of the engine coolant (antifreeze) and will require more frequent engine coolant (antifreeze) changes.

Cooling System Pressure Cap

The cap must be fully tightened to prevent loss of coolant, and to ensure that engine coolant (antifreeze) will return to the radiator from the coolant recovery bottle.

The cap should be inspected and cleaned if there is any accumulation of foreign material on the sealing surfaces.

WARNING!

- **The warning words "DO NOT OPEN HOT" on the cooling system pressure cap are a safety precaution. Never add engine coolant (antifreeze) when the engine is overheated. Do not loosen or remove the cap to cool an overheated engine. Heat causes pressure to build up in the cooling system. To prevent scalding or injury, do not remove the pressure cap while the system is hot or under pressure.**
- **Do not use a pressure cap other than the one specified for your vehicle. Personal injury or engine damage may result.**

Disposal of Used Coolant

Used ethylene glycol-based engine coolant (antifreeze) is a regulated substance requiring proper disposal. Check with your local authorities to determine the disposal

rules for your community. To prevent ingestion by animals or children, do not store ethylene glycol-based engine coolant (antifreeze) in open containers or allow it to remain in puddles on the ground. If ingested by a child, contact a physician immediately. Clean up any ground spills immediately.

Coolant Level

The coolant bottle provides a quick visual method for determining that the coolant level is adequate. With the engine OFF and cold, the level of the engine coolant (antifreeze) in the bottle should be between the ranges indicated on the bottle.

The radiator normally remains completely full, so there is no need to remove the radiator cap unless checking for engine coolant (antifreeze) freeze point or replacing coolant. Advise your service attendant of this. As long as the engine operating temperature is satisfactory, the coolant bottle need only be checked once a month.

When additional engine coolant (antifreeze) is needed to maintain the proper level, it should be added to the coolant bottle. Do not overfill.

Points to Remember

NOTE: When the vehicle is stopped after a few miles (kilometers) of operation, you may observe vapor coming from the front of the engine compartment. This is normally a result of moisture from rain, snow, or high humidity accumulating on the radiator and being vaporized when the thermostat opens, allowing hot engine coolant (antifreeze) to enter the radiator.

If an examination of your engine compartment shows no evidence of radiator or hose leaks, the vehicle may be safely driven. The vapor will soon dissipate.

- Do not overfill the coolant recovery bottle.
- Check engine coolant (antifreeze) freeze point in the radiator and in the coolant recovery bottle. If engine

coolant (antifreeze) needs to be added, contents of coolant recovery bottle must also be protected against freezing.

- If frequent engine coolant (antifreeze) additions are required, or if the level in the coolant recovery bottle does not drop when the engine cools, the cooling system should be pressure tested for leaks.
- Maintain coolant concentration at 50% HOAT engine coolant (antifreeze) (minimum) and distilled water for proper corrosion protection of your engine, which contains aluminum components.
- Make sure that the radiator and coolant recovery bottle overflow hoses are not kinked or obstructed.
- Keep the front of the radiator clean. If your vehicle is equipped with air conditioning, keep the front of the condenser clean, also.
- Do not change the thermostat for Summer or Winter operation. If replacement is ever necessary, install ONLY the correct type thermostat. Other designs may result in unsatisfactory coolant performance, poor gas mileage, and increased emissions.

Brake System

In order to assure brake system performance, all brake system components should be inspected periodically. Refer to the “Maintenance Schedule” in Section 8 for proper maintenance intervals.

WARNING!

Riding the brakes can lead to brake failure and possibly an accident. Driving with your foot resting or riding on the brake pedal can result in abnormally high brake temperatures, excessive lining wear, and possible brake damage. You wouldn’t have your full braking capacity in an emergency.

Master Cylinder - Brake Fluid Level Check

Check the fluid level in the master cylinder immediately if the brake system warning light indicates system failure.

Check the fluid level in the master cylinder when performing underhood services.

Clean the top of the master cylinder area before removing the cap. Add fluid to bring the level up to the top of the "FULL" mark on the side of the master cylinder reservoir.

Overfilling of fluid is not recommended because it may cause leaking in the system.

Add enough fluid to bring the level up to the requirements described on the brake fluid reservoir. With disc brakes, fluid level can be expected to fall as the brake pads wear. However, low fluid level may be caused by a leak and a checkup may be needed.

Use only manufacturer's recommended brake fluid. Refer to "Fluids, Lubricants, and Genuine Parts" in this section for the correct fluid type.

WARNING!

- **Overfilling the brake fluid reservoir can result in spilling brake fluid on hot engine parts and the brake fluid catching fire.**
- **Use of a brake fluid that may have a lower initial boiling point, or is unidentified as to specification, may result in sudden brake failure during hard prolonged braking. You could have an accident.**

Use only brake fluid that has been in a tightly closed container to avoid contamination from foreign matter or moisture.

CAUTION!

Do not allow petroleum-based fluid to contaminate the brake fluid. Seal damage may result.

Automatic Transmission

Fluid Level Check

Regular automatic transmission fluid level checks are not required. For this reason, the dipstick is omitted.

If you notice fluid loss or gear shift malfunction, have your authorized dealer check the transmission fluid level.

CAUTION!

- **Using a transmission fluid other than the manufacturer's recommended fluid may cause deterioration in transmission shift quality and/or torque converter shudder. Using a transmission fluid other than that recommended by the manufacturer will result in more frequent fluid and filter changes. Refer to "Fluids, Lubricants, and Genuine Parts" in this section for the correct fluid type.**
- **The fluid level is preset at the factory and it does not require adjustment under normal operating conditions. If a transmission fluid leak occurs, visit your authorized dealer immediately. Severe damage to the transmission may occur. Your authorized dealer has the proper tools to adjust the fluid level accurately.**

Fluid and Filter Changes

Refer to the "Maintenance Schedule" in Section 8 for proper maintenance intervals.

If the transmission is disassembled for any reason, the fluid and filter should be changed.

Selection of Lubricant

It is important that the proper lubricant is used in the transmission to assure optimum transmission performance. Use only manufacturer's recommended transmission fluid. Refer to "Fluids, Lubricants, and Genuine Parts" in this section for the correct fluid type. It is important that the transmission fluid be maintained at the prescribed level using the recommended fluid. No chemical flushes should be used in any transmission; only the approved lubricant may be used.

Special Additives

Automatic Transmission Fluid (ATF) is an engineered product and its performance may be impaired by supplemental additives. Therefore, do not add any fluid additives to the transmission. The only exception to this policy is the use of special dyes to aid in detecting fluid leaks. In addition, avoid using transmission sealers as they may adversely affect seals.

All Wheel Drive (AWD) — If Equipped

The all wheel drive system consists of a transfer case and front differential. The exterior surface of these components should be inspected for evidence of fluid leaks. Confirmed leaks should be repaired as soon as possible.

The transfer case fluid fill/inspection plug is located in the middle of the rear housing. To inspect the transfer case fluid level, remove the fill/inspection plug. The fluid level should be even with the bottom of the hole. Use this plug to add fluid as required.

The front differential fill plug is located on the outer cover near the halfshaft attachment. To inspect the differential fluid level, remove the fill plug. The fluid level should be even with or slightly below the bottom of the hole.

Fluid Changes
Refer to the "Maintenance Schedule" in Section 8 for proper maintenance intervals.

Appearance Care and Protection from Corrosion

Protection of Body and Paint from Corrosion
Vehicle body care requirements vary according to geographic locations and usage. Chemicals that make roads passable in snow and ice, and chemicals that are sprayed on trees and road surfaces during other seasons, are highly corrosive to the metal in your vehicle. Outside parking, which exposes your vehicle to airborne contaminants, road surfaces on which the vehicle is operated, extreme hot or cold weather and other extreme conditions will have an adverse effect on paint, metal trim, and underbody protection.

The following maintenance recommendations will enable you to obtain maximum benefit from the corrosion resistance built into your vehicle.

What Causes Corrosion?
Corrosion is the result of deterioration or removal of paint and protective coatings from your vehicle.

The most common causes are:

- Road salt, dirt, and moisture accumulation.
- Stone and gravel impact.
- Insects, tree sap, and tar.
- Salt in the air near seacoast localities.
- Atmospheric fallout/industrial pollutants.

Washing

- Wash your vehicle regularly. Always wash your vehicle in the shade using MOPAR® Car Wash or a mild car wash soap, and rinse the panels completely with clear water.
- If insects, tar, or other similar deposits have accumulated on your vehicle, use MOPAR® Super Kleen Bug and Tar Remover to remove.
- Use MOPAR® Cleaner Wax to remove road film, stains and to protect your paint finish. Take care never to scratch the paint.
- Avoid using abrasive compounds and power buffing that may diminish the gloss or thin out the paint finish.

CAUTION!

Do not use abrasive or strong cleaning materials such as steel wool or scouring powder that will scratch metal and painted surfaces.

Special Care

- If you drive on salted or dusty roads or if you drive near the ocean, hose off the undercarriage at least once a month.
- It is important that the drain holes in the lower edges of the doors, rocker panels, and trunk be kept clear and open.
- If you detect any stone chips or scratches in the paint, touch them up immediately. The cost of such repairs is considered the responsibility of the owner.

- If your vehicle is damaged due to an accident or similar cause that destroys the paint and protective coating, have your vehicle repaired as soon as possible. The cost of such repairs is considered the responsibility of the owner.
- If you carry special cargo such as chemicals, fertilizers, de-icer salt, etc., be sure that such materials are well packaged and sealed.
- If a lot of driving is done on gravel roads, consider mud or stone shields behind each wheel.
- Use MOPAR® Touch Up Paint or equivalent on scratches as soon as possible. Your authorized dealer has touch up paint to match the color of your vehicle.

Wheel and Wheel Trim Care

All wheels and wheel trim, especially aluminum and chrome plated wheels should be cleaned regularly with a mild soap and water to prevent corrosion. To remove heavy soil and/or excessive brake dust, use MOPAR® Wheel Cleaner (05066247AB) or equivalent or select a nonabrasive, non-acidic cleaner. Do not use scouring pads, steel wool, a bristle brush, or metal polishes. Only MOPAR® or equivalent is recommended. Do not use oven cleaner. Avoid automatic car washes that use acidic solutions or harsh brushes that may damage the wheels' protective finish.

Interior Care

Use MOPAR® Fabric Cleaner or equivalent to clean fabric upholstery and MOPAR® Carpet Cleaner for carpeting.

Interior Trim should be cleaned starting with a damp cloth, or MOPAR® Satin Select. Do not use harsh cleaners or Armorall. Use MOPAR® Total Clean to clean vinyl upholstery.

MOPAR® Total Clean is specifically recommended for leather upholstery.

Your leather upholstery can be best preserved by regular cleaning with a damp soft cloth. Small particles of dirt can act as an abrasive and damage the leather upholstery and should be removed promptly with a damp cloth. Stubborn soils can be removed easily with a soft cloth and MOPAR® Total Clean or equivalent. Care should be taken to avoid soaking your leather upholstery with any liquid. Please do not use polishes, oils, cleaning fluids, solvents, detergents, or ammonia-based cleaners to clean your leather upholstery. Application of a leather conditioner is not required to maintain the original condition.

WARNING!

Do not use volatile solvents for cleaning purposes. Many are potentially flammable, and if used in closed areas they may cause respiratory harm.

Cleaning Headlights

Your vehicle has plastic headlights that are lighter and less susceptible to stone breakage than glass headlights.

Plastic is not as scratch resistant as glass and therefore different lens cleaning procedures must be followed.

To minimize the possibility of scratching the lenses and reducing light output, avoid wiping with a dry cloth. To remove road dirt, wash with a mild soap solution followed by rinsing.

Do not use abrasive cleaning components, solvents, steel wool or other aggressive material to clean the lenses.

Glass Surfaces

All glass surfaces should be cleaned on a regular basis with MOPAR® Glass Cleaner or any commercial household-type glass cleaner. Never use an abrasive type cleaner. Use caution when cleaning the inside rear window equipped with electric defrosters or the right rear

quarter window equipped with the radio antenna. Do not use scrapers or other sharp instrument that may scratch the elements.

When cleaning the rear view mirror, spray cleaner on the towel or rag that you are using. Do not spray cleaner directly on the mirror.

Cleaning Plastic Instrument Cluster Lenses
The lenses in front of the instruments in this vehicle are molded in clear plastic. When cleaning the lenses, care must be taken to avoid scratching the plastic.

1. Clean with a wet soft rag or micro-fiber towel. A mild soap solution may be used, but do not use high alcohol content or abrasive cleaners. If soap is used, wipe clean with a clean damp rag.

2. Dry with a soft tissue.

Seat Belt Maintenance
Do not bleach, dye, or clean the belts with chemical solvents or abrasive cleaners. This will weaken the fabric. Sun damage can also weaken the fabric.

If the belts need cleaning, use MOPAR® Total Clean, a mild soap solution, or lukewarm water. Do not remove the belts from the vehicle to wash them.

Replace the belts if they appear frayed or worn or if the buckles do not work properly.

Cleaning the Center Console Cupholders
Clean with a damp cloth or towel using a mild detergent with the cupholder in the center console.

NOTE: The cupholder cannot be removed.

FUSES

Integrated Power Module

The Integrated Power Module (IPM) is located in the engine compartment. This module contains fuses and relays.

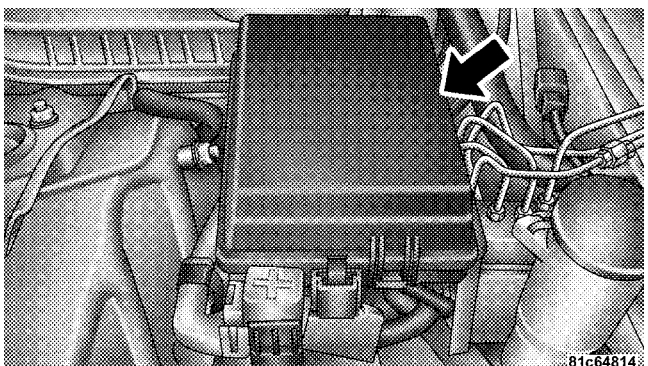

Integrated Power Module

CAUTION!

- **When installing the integrated power module cover, it is important to ensure the cover is properly positioned and fully latched. Failure to do so may allow water to get into the integrated power module and possibly result in an electrical system failure.**
- **When replacing a blown fuse, it is important to use only a fuse having the correct amperage rating. The use of a fuse with a rating other than indicated may result in a dangerous electrical system overload. If a properly rated fuse continues to blow, it indicates a problem in the circuit that must be corrected.**

Cavity	Cartridge Fuse	Mini-Fuse	Description
1	—	15 Amp Blue	Washer Motor
2	—	25 Amp Neutral	Powertrain Control Module (PCM)
3	—	25 Amp Neutral	Ignition Run/Start
4	—	25 Amp Neutral	Alternator/EGR Solenoid
5	—	—	—
6	—	25 Amp Neutral	Ignition Coils/Injectors/Short Runner Valve
7	—	—	—
8	—	25 Amp Neutral	Starter
9	—	—	—

Cavity	Cartridge Fuse	Mini-Fuse	Description
10	30 Amp Pink	—	Windshield Wiper
11	30 Amp Pink	—	Anti-Lock Brake System (ABS) Valves - if equipped
12	40 Amp Green	—	Radiator Fan
13	50 Amp Red	—	Anti-Lock Brake System (ABS) Pump Motor - if equipped
14	—	—	—
15	50 Amp Red	—	Radiator Fan
16	—	—	—
17	—	—	—
18	—	—	—

Cavity	Car-tridge Fuse	Mini-Fuse	Description
19	—	—	—
20	—	—	—
21	—	—	—
22	—	—	—

Rear Power Distribution Center

There is also a power distribution center located in the trunk under the spare tire access panel. This center contains fuses and relays.

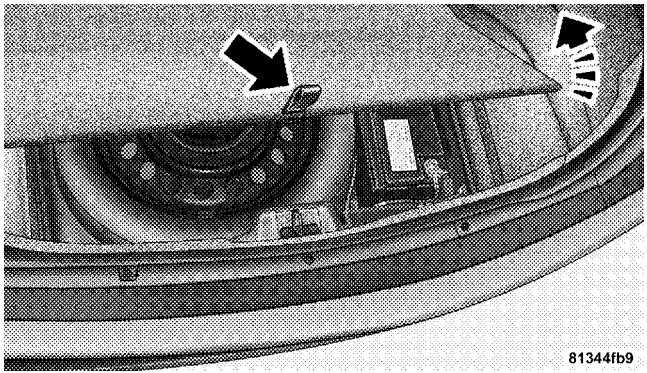

Opening The Access Panel

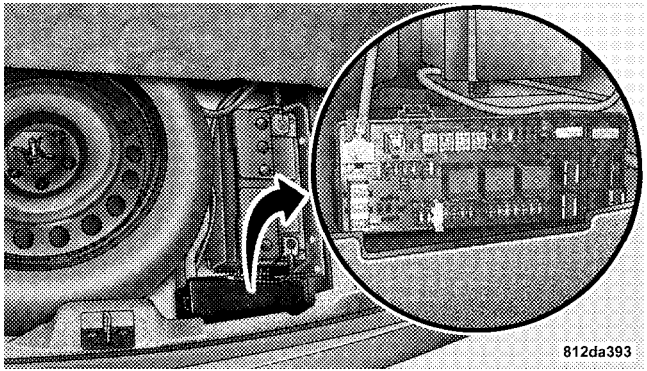

Rear Power Distribution Center

CAUTION!

- **When installing the power distribution center cover, it is important to ensure the cover is properly positioned and fully latched. Failure to do so may allow water to get into the power distribution center and possibly result in an electrical system failure.**
- **When replacing a blown fuse, it is important to use only a fuse having the correct amperage rating. The use of a fuse with a rating other than indicated may result in a dangerous electrical system overload. If a properly rated fuse continues to blow, it indicates a problem in the circuit that must be corrected.**

Cavity	Cartridge Fuse	Mini-Fuse	Description
1	60 Amp Yellow	—	Ignition Off Draw (IOD)
2	40 Amp Green	—	Integrated Power Module (IPM)
3	—	—	—
4	40 Amp Green	—	Integrated Power Module (IPM)
5	30 Amp Pink	—	Heated Seats - if equipped
6	—	20 Amp Yellow	Fuel Pump
7	—	—	—
8	—	15 Amp Blue	Diagnostic Link Connector (DLC)/Wireless Control Module (WCM)/ Wireless Ignition Node (WIN)
9	—	20 Amp Yellow	Power Outlet
10	—	—	—
11 *	—	—	—
12 *	—	—	—
13 *	—	—	—
14	—	10 Amp Red	AC Heater Control/ Cluster/Security Module - if equipped
15	—	20 Amp Yellow	Trailer Tow Brake Module - if equipped

Cavity	Cartridge Fuse	Mini-Fuse	Description
16	—	—	—
17	—	20 Amp Yellow	Cluster
18	—	20 Amp Yellow	Selectable Power Outlet
19	—	10 Amp Red	Stop Lights
20	—	—	—
21	—	—	—
22	—	—	—
23	—	—	—
24	—	—	—
25	—	—	—
26	—	—	—
27	—	10 Amp Red	Occupant Restraint Controller (ORC)
28	—	10 Amp Red	Ignition Run
29	—	5 Amp Orange	Cluster/Electronic Stability Program (ESP) - if equipped/Powertrain Control Module (PCM)/ STOP LIGHT Switch
30	—	10 Amp Red	Door Modules/Power Mirrors/Steering Control Module (SCM)
31	—	—	—
32	—	—	—
33	—	—	—
34	—	—	—

Cavity	Cartridge Fuse	Mini-Fuse	Description
35	—	5 Amp Orange	Antenna Module - if equipped/Power Mirrors
36	—	20 Amp Yellow	Hands-Free Phone - if equipped/Video Monitor - if equipped/Radio
37	—	15 Amp Blue	Transmission
38	—	10 Amp Red	Cargo Light/Satellite Receiver (SDARS) Video - if equipped/Vehicle Information Module - if equipped
39	—	10 Amp Red	Heated Mirrors - if equipped
40	—	5 Amp Orange	Auto Inside Rearview Mirror - if equipped/Heated Seats - if equipped/Switch Bank
41	—	10 Amp Red	AC Heater Control/Headlights/Tire Pressure Monitoring - if equipped
42	30 Amp Pink	—	Front Blower Motor
43	30 Amp Pink	—	Rear Window Defroster
44	20 Amp Blue	—	Amplifier - if equipped/Sunroof - if equipped

* Cavities 11, 12, and 13 contain self-resetting fuses (circuit breakers) that are only serviceable by an authorized dealer. The cluster and the driver seat switch (if equipped) are fused by the 25-Amp circuit breaker in Cavity 11. The passenger seat switch (if equipped) is fused by the 25-Amp circuit breaker in Cavity 12. The door modules, the driver power window switch, and the passenger power window switch are fused by the 25-Amp circuit breaker in Cavity 13. If you experience temporary or permanent loss of these systems, see your authorized dealer for service.

VEHICLE STORAGE

If you are leaving your vehicle dormant for more than 21 days, you may want to take these steps to protect your battery.

- Disconnect the negative cable from the battery.
- Anytime you store your vehicle, or keep it out of service (i.e., vacation) for two weeks or more, run the air conditioning system at idle for about five minutes in the fresh air and high blower setting. This will ensure adequate system lubrication to minimize the possibility of compressor damage when the system is started again.

REPLACEMENT LIGHT BULBS

Interior	Bulb Number
Rear Courtesy/Reading Lights	W5W
Rear Compartment (Trunk) Light	562
Overhead Console Reading Lights	578
Visor Vanity Lights	A6220
Glove Box Light	194
Door Courtesy	562
Shift Indicator Light	JKLE14140
Optional Door Map Pocket / Cupholder Lighting	LED (Serviced at Authorized Dealer)

NOTE: For lighted switches, see your authorized dealer for replacement instructions.

All of the interior bulbs are glass wedge base or glass cartridge types. Aluminum base bulbs are not approved and should not be used for replacement.

Exterior	Bulb Number
Low Beam Headlight (Standard Halogen)	9006
Low Beam Headlight – High Intensity Discharge (HID)	D1S (Serviced at Authorized Dealer)
High Beam Headlight	9005
Front Park/Turn Light	3157A
Front Fog Light — If Equipped	9145/H10 (Serviced at Authorized Dealer)
Front Side Marker	194 (Serviced at Authorized Dealer)
Tail/Stop Light	3057
Tail/Turn Light	3057
Rear Side Marker	168
Backup Light	921
Center High-Mount Stop Light (CHMSL)	LED (Serviced at Authorized Dealer)
License	168

BULB REPLACEMENT

Low Beam Headlight, High Beam Headlight, Park/Turn Light, and Front Side Marker Light — Models with Halogen Headlights

1. Open the hood.

NOTE: Removal of the air cleaner filter housing may be necessary prior to replacing bulbs in the headlight assembly on the driver side of the vehicle.

2. Twist the appropriate bulb and socket assembly counterclockwise, and then pull it out of the headlight assembly.

CAUTION!

Do not touch the new bulb with your fingers. Oil contamination will severely shorten bulb life. If the bulb comes in contact with an oily surface, clean the bulb with rubbing alcohol.

3. Disconnect the bulb from the socket assembly and install the replacement bulb.

4. Reinstall the bulb and socket assembly into the headlight assembly, and then turn it clockwise.

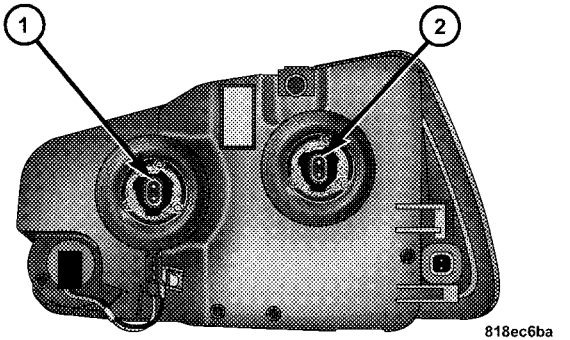

1 — High Beam Headlight Bulb
2 — Low Beam Headlight Bulb

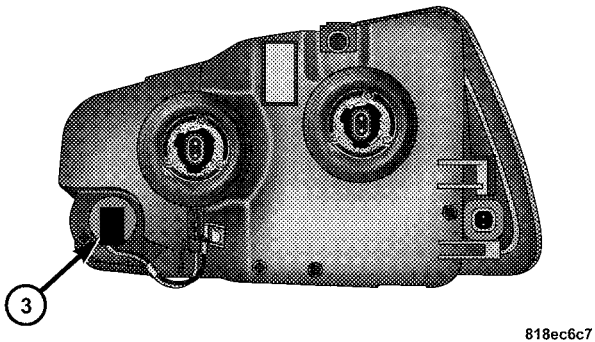

3 — Park/Turn Light Bulb

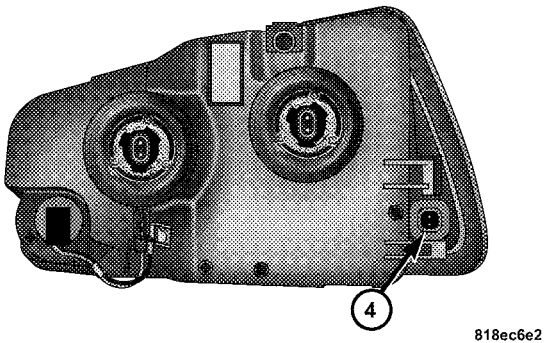

4 — Side Marker Light Bulb

Low Beam Headlight, High Beam Headlight, and Park/Turn Light — Models with High Intensity Discharge Headlights (HID)

HID Headlights

The headlights are a type of high voltage discharge tube. High voltage can remain in the circuit even with the HEADLIGHT switch off and the key removed. **Because of this, you should not attempt to service a headlight bulb yourself. If a headlight bulb fails, take your vehicle to an authorized dealer for service.**

WARNING!

A transient high tension occurs at the bulb sockets of HID headlights when the HEADLIGHT switch is turned ON. It may cause serious electrical shock or electrocution if not serviced properly. See your authorized dealer for service.

NOTE: On vehicles equipped with HID headlights, when the headlights are turned on, there is a blue hue to the lights. This diminishes and becomes more white after approximately 10 seconds, as the system charges.

Backup Light, Side Marker Light, Tail/Turn Light, and Tail/Stop Light

1. Open the Trunk.

2. Remove two fasteners from the back of the tail light assembly.

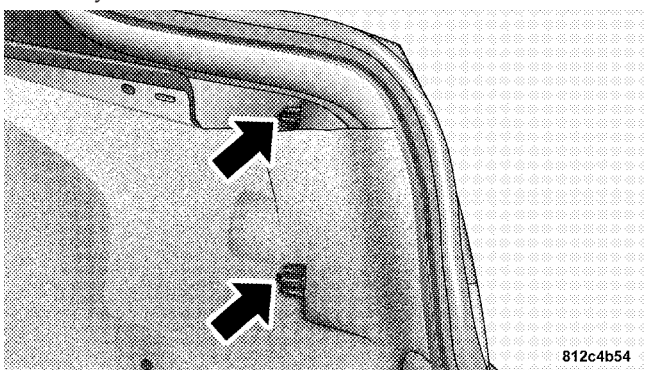

3. Pull back the trunk liner.

4. Remove the remaining fastener from the back of the tail light assembly.

5. Push the electrical connector locking tab to the side.

6. Disconnect the electrical connector.

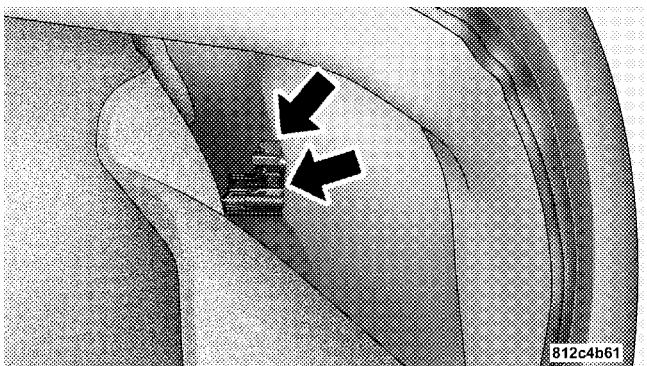

7. Pull the tail light assembly clear from the vehicle to access the bulbs.

8. Turn the appropriate bulb and socket assembly counterclockwise to remove it from the tail light assembly.

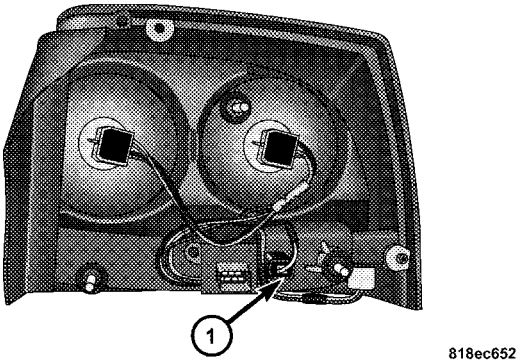

1 — Backup Light Bulb

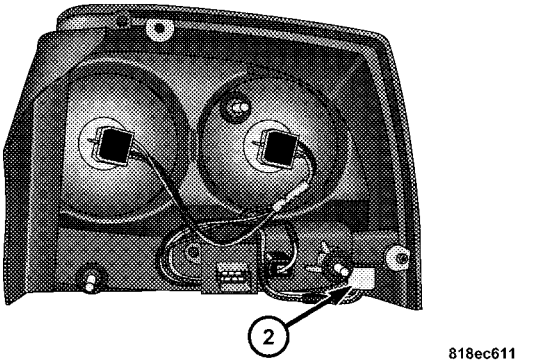

2 — Side Marker Light Bulb

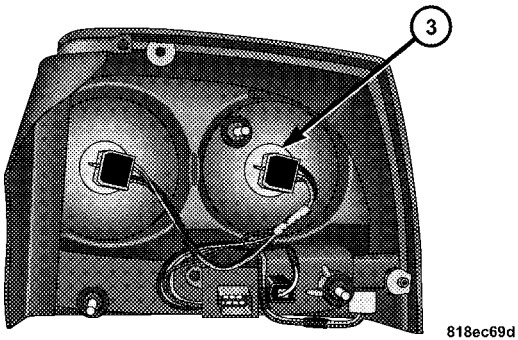

3 — Tail/Turn Light Bulb

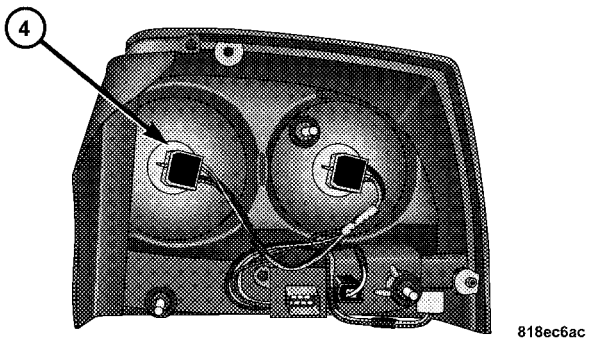

4 — Tail/Stop Light Bulb

9. Disconnect the bulb from the socket assembly and install the replacement bulb.

10. Reinstall the bulb and socket assembly into the tail light assembly, and then turn it clockwise.

11. Reinstall the tail light assembly, fasteners, electrical connector, and trunk liner.

12. Close the trunk.

License Light

1. Remove the screws securing the light to the rear fascia.

2. Remove the bulb and socket assembly.

3. Disconnect the bulb from the socket assembly and install the replacement bulb.

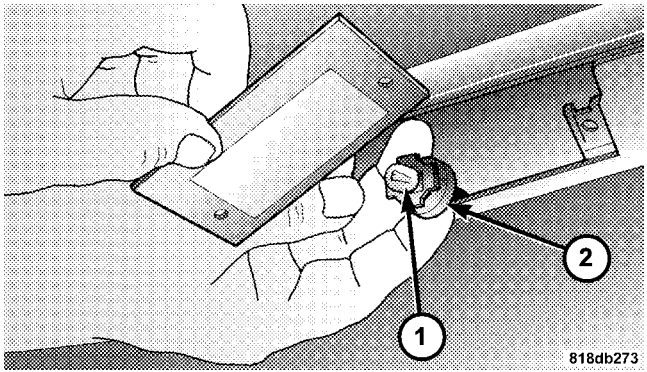

1 — License Light Bulb
2 — Socket

4. Reinstall the bulb and socket assembly.

5. Reattach the light to the rear fascia, and then install the screws.

FLUIDS AND CAPACITIES

	U.S.	Metric
Fuel (Approximate)		
2.7 Liter Engine	18 Gallons	68 Liters
3.5 Liter Engine without All Wheel Drive	18 Gallons	68 Liters
3.5 Liter Engine with All Wheel Drive	19 Gallons	72 Liters
5.7 Liter Engine	19 Gallons	72 Liters
Engine Oil with Filter		
2.7 Liter Engine (SAE 5W-20, API Certified)	6.0 Quarts	5.7 Liters
3.5 Liter Engine (SAE 10W-30, API Certified)	6.0 Quarts	5.7 Liters
5.7 Liter Engine (SAE 5W-20, API Certified)	7.0 Quarts	6.6 Liters
Cooling System *		
2.7 Liter Engine (MOPAR® Antifreeze/Coolant 5 Year/100,000 Mile Formula)	9.9 Quarts	9.4 Liters
3.5 Liter Engine without All Wheel Drive (MOPAR® Antifreeze/ Coolant 5 Year/100,000 Mile Formula)	11.1 Quarts	10.5 Liters

3.5 Liter Engine with All Wheel Drive (MOPAR® Antifreeze/Coolant 5 Year/100,000 Mile Formula)	11.4 Quarts	10.8 Liters
5.7 Liter Engine without Severe Duty II Cooling System (MOPAR® Antifreeze/Coolant 5 Year/100,000 Mile Formula)	14.7 Quarts	13.9 Liters
5.7 Liter Engine with Severe Duty II Cooling System (MOPAR® Antifreeze/Coolant 5 Year/100,000 Mile Formula)	15.1 Quarts	14.3 Liters
* Includes heater and coolant recovery bottle filled to MAX level.		

FLUIDS, LUBRICANTS, AND GENUINE PARTS

Engine

Component	Fluid, Lubricant, or Genuine Part
Engine Coolant	MOPAR® Antifreeze/Coolant 5 Year/100,000 Mile Formula HOAT (Hybrid Organic Additive Technology) or equivalent
Engine Oil (2.7L Engine)	Use API Certified SAE 5W-20 Engine Oil, meeting the requirements of Chrysler Material Standard MS-6395. Refer to the engine oil fill cap for correct SAE grade.
Engine Oil (3.5L Engine)	Use API Certified SAE 10W-30 Engine Oil, meeting the requirements of Chrysler Material Standard MS-6395. Refer to the engine oil fill cap for correct SAE grade.
Engine Oil (5.7L Engine)	Use API Certified SAE 5W-20 Engine Oil, meeting the requirements of Chrysler Material Standard MS-6395. Refer to the engine oil fill cap for correct SAE grade.
Spark Plugs (2.7L Engine)	TE10MCC5 (Gap 0.050 in [1.27 mm])
Spark Plugs (3.5L Engine)	ZFR5LP–13G (Gap 0.050 in [1.27 mm])
Spark Plugs (5.7L Engine)	LZFR5C–11 (Gap 0.043 in [1.1 mm])

Component	Fluid, Lubricant, or Genuine Part
Oil Filter (2.7L, 3.5L, and 5.7L Engines)	MOPAR® Engine Oil Filter (P/N 04884899AB) or equivalent
Fuel Selection (2.7L Engine)	87 Octane
Fuel Selection (3.5L and 5.7L Engines)	87 Octane Acceptable — 89 Octane Recommended

Chassis

Component	Fluid, Lubricant, or Genuine Part
Automatic Transmission	MOPAR® ATF+4 Automatic Transmission Fluid
Brake Master Cylinder	MOPAR® DOT 3 and SAE J1703 should be used or equivalent. If DOT 3 brake fluid is not available, then DOT 4 is acceptable. Use only recommended brake fluids.
Power Steering Reservoir	MOPAR® Power Steering Fluid + 4, MOPAR® ATF+4 Automatic Transmission Fluid
Front Axle	API GL-5 SAE 75W90 Synthetic Gear Lubricant or equivalent
Rear Axle	API GL-5 SAE 75W140 Synthetic Gear Lubricant or equivalent
Transfer Case	MOPAR® (P/N 68049954AA) BW 44–40 Transfer Case Lubricant

MAINTENANCE SCHEDULES

CONTENTS

■ Emissions Control System Maintenance 432
■ Maintenance Schedule 432
□ Required Maintenance Intervals 434

EMISSIONS CONTROL SYSTEM MAINTENANCE

The Scheduled Maintenance services listed in **bold type** must be done at the times or mileages specified to ensure the continued proper functioning of the emissions control system. These and all other maintenance services included in this manual, should be done to provide best vehicle performance and reliability. More frequent maintenance may be needed for vehicles in severe operating conditions, such as dusty areas and very short trip driving.

Inspection and service should also be done anytime a malfunction is suspected.

NOTE: Maintenance, replacement or repair of the emissions control devices and systems on your vehicle may be performed by any automotive repair establishment or individual using any automotive part that has been certified pursuant to U.S. EPA or in the State of California, California Air Resources Board regulations.

MAINTENANCE SCHEDULE

The oil change indicator system will remind you that it is time to take your vehicle in for scheduled maintenance.

On Electronic Vehicle Information Center (EVIC) equipped vehicles, “Oil Change Required” will be displayed in the EVIC and a single chime will sound, indicating that an oil change is necessary.

On Non-EVIC equipped vehicles, “Change Oil” will flash in the instrument cluster odometer and a single chime will sound, indicating that an oil change is necessary.

Based on engine operation conditions, the oil change indicator message will illuminate. This means that service is required for your vehicle. Have your vehicle serviced as soon as possible, within the next 500 miles (805 km).

NOTE:

- The oil change indicator message will not monitor the time since the last oil change. Change your vehicle's oil if it has been six months since your last oil change, even if the oil change indicator message is NOT illuminated.
- Change your engine oil more often if you drive your vehicle off-road for an extended period of time.
- Under no circumstances should oil change intervals exceed 6,000 miles (10,000 km) or six months, whichever comes first.

Your authorized dealer will reset the oil change indicator message after completing the scheduled oil change. If a scheduled oil change is performed by someone other than your authorized dealer, the message can be reset by referring to the steps described under "Oil Change Required" under "Electronic Vehicle Information Center (EVIC)" in Section 4 or under "Odometer/Trip Odometer" under "Instrument Cluster Descriptions" in Section 4.

At Each Stop for Fuel

- Check the engine oil level. Refer to "Engine Oil" under "Maintenance Procedures" in Section 7.
- Check the windshield washer solvent and add if required.

Once a Month

- Check tire pressure and look for unusual wear or damage.
- Inspect the battery, and clean and tighten the terminals as required.
- Check the fluid levels of coolant reservoir, brake master cylinder, power steering, and transmission, and add as needed.

- Check all lights and other electrical items for correct operation.

At Each Oil Change

- Change the engine oil filter.
- Inspect the brake hoses and lines.

CAUTION!

Failure to perform the required maintenance items may result in damage to the vehicle.

Required Maintenance Intervals

Refer to the Maintenance Schedules on the following pages for the required maintenance intervals.

6,000 Miles (10,000 km) or 6 Months Maintenance Service Schedule

- ❏ Change the engine oil and engine oil filter.
- ❏ Rotate tires.

Odometer Reading Date

Repair Order # Dealer Code

Signature Authorized Chrysler Dealer

12,000 Miles (20,000 km) or 12 Months Maintenance Service Schedule

- ❏ Change the engine oil and engine oil filter.
- ❏ Rotate tires.
- ❏ If using your vehicle for any of the following: Dusty or off-road conditions. Inspect the engine air cleaner filter; replace if necessary.
- ❏ Replace the air conditioning filter (if equipped)
- ❏ Inspect the brake linings; replace if necessary.
- ❏ Inspect the CV joints. Perform the first inspection at 12,000 miles (20 000 km) or 12 months.
- ❏ Inspect exhaust system. Perform the first inspection at 12,000 miles (20 000 km) or 12 months.

Odometer Reading Date

Repair Order # Dealer Code

Signature Authorized Chrysler Dealer

18,000 Miles (30,000 km) or 18 Months Maintenance Service Schedule

- ❏ Change the engine oil and engine oil filter.
- ❏ Rotate tires.
- ❏ Inspect the rear axle fluid. Inspect the front axle fluid — All Wheel Drive (AWD).

Odometer Reading Date

Repair Order # Dealer Code

Signature Authorized Chrysler Dealer

24,000 Miles (40,000 km) or 24 Months Maintenance Service Schedule

- ❏ Change the engine oil and engine oil filter.
- ❏ Rotate tires.
- ❏ If using your vehicle for any of the following: Dusty or off-road conditions. Inspect the engine air cleaner filter; replace if necessary.
- ❏ Replace the air conditioning filter (if equipped)
- ❏ Inspect the brake linings; replace if necessary.
- ❏ Inspect the CV joints.
- ❏ Inspect exhaust system.
- ❏ Inspect the front suspension, tie rod ends and boot seals; replace if necessary.

Odometer Reading Date

Repair Order # Dealer Code

Signature Authorized Chrysler Dealer

30,000 Miles (50,000 km) or 30 Months Maintenance Service Schedule

- ❏ Change the engine oil and engine oil filter.
- ❏ Rotate tires.
- ❏ Replace the engine air cleaner filter.
- ❏ **Replace the spark plugs (2.7L and 5.7L Engines).**
- ❏ Inspect the transfer case fluid — All Wheel Drive (AWD).
- ❏ Adjust parking brake on vehicles equipped with four-wheel disc brakes.

Odometer Reading Date

Repair Order # Dealer Code

Signature Authorized Chrysler Dealer

36,000 Miles (60,000 km) or 36 Months Maintenance Service Schedule

- ❏ Change the engine oil and engine oil filter.
- ❏ Rotate tires.
- ❏ If using your vehicle for any of the following: Dusty or off-road conditions. Inspect the engine air cleaner filter; replace if necessary.
- ❏ Replace the air conditioning filter (if equipped)
- ❏ Inspect the rear axle fluid. Inspect the front axle fluid — All Wheel Drive (AWD).
- ❏ Inspect the brake linings; replace if necessary.

Odometer Reading Date

Repair Order # Dealer Code

Signature Authorized Chrysler Dealer

42,000 Miles (70,000 km) or 42 Months Maintenance Service Schedule

- ❏ Change the engine oil and engine oil filter.
- ❏ Rotate tires.

Odometer Reading Date

Repair Order # Dealer Code

Signature Authorized Chrysler Dealer

48,000 Miles (80,000 km) or 48 Months Maintenance Service Schedule

- ❏ Change the engine oil and engine oil filter.
- ❏ Rotate tires.
- ❏ If using your vehicle for any of the following: Dusty or off-road conditions. Inspect the engine air cleaner filter; replace if necessary.
- ❏ Replace the air conditioning filter (if equipped)
- ❏ Inspect the brake linings; replace if necessary.
- ❏ Inspect the CV joints.
- ❏ Inspect exhaust system.
- ❏ Inspect the front suspension, tie rod ends and boot seals; replace if necessary.
- ❏ Change the rear axle fluid and on models equipped with All Wheel Drive (AWD) change the front axle fluid if using your vehicle for any of the following: police, taxi, fleet, off-road, or frequent trailer towing.

Odometer Reading Date

Repair Order # Dealer Code

Signature Authorized Chrysler Dealer

54,000 Miles (90,000 km) or 54 Months Maintenance Service Schedule

- ❏ Change the engine oil and engine oil filter.
- ❏ Rotate tires.
- ❏ Inspect the rear axle fluid. Inspect the front axle fluid — All Wheel Drive (AWD).

Odometer Reading Date

Repair Order # Dealer Code

Signature Authorized Chrysler Dealer

60,000 Miles (100,000 km) or 60 Months Maintenance Service Schedule

- ❏ Change the engine oil and engine oil filter.
- ❏ Rotate tires.
- ❏ Replace the engine air cleaner filter.
- ❏ **Replace the spark plugs (2.7L and 5.7L Engines).**
- ❏ Replace the air conditioning filter (if equipped)
- ❏ Inspect the brake linings; replace if necessary.
- ❏ Adjust parking brake on vehicles equipped with four-wheel disc brakes.
- ❏ Change the automatic transmission fluid and filter if using your vehicle for any of the following: police, taxi, fleet, or frequent trailer towing.
- ❏ Change the transfer case fluid if using your vehicle for any of the following: police, taxi, fleet, or frequent trailer towing — All Wheel Drive (AWD).
- ❏ Flush and replace the engine coolant at 60 months if not done at 102,000 miles (170 000 km).

Odometer Reading Date

Repair Order # Dealer Code

Signature Authorized Chrysler Dealer

66,000 Miles (110,000 km) or 66 Months Maintenance Service Schedule

- ❏ Change the engine oil and engine oil filter.
- ❏ Rotate tires.

Odometer Reading Date

Repair Order # Dealer Code

Signature Authorized Chrysler Dealer

72,000 Miles (120,000 km) or 72 Months Maintenance Service Schedule

- ❏ Change the engine oil and engine oil filter.
- ❏ Rotate tires.
- ❏ If using your vehicle for any of the following: Dusty or off-road conditions. Inspect the engine air cleaner filter; replace if necessary.
- ❏ Replace the air conditioning filter (if equipped)
- ❏ Inspect the rear axle fluid. Inspect the front axle fluid — All Wheel Drive (AWD).
- ❏ Inspect the brake linings; replace if necessary.
- ❏ Inspect the CV joints.
- ❏ Inspect exhaust system.
- ❏ Inspect the front suspension, tie rod ends and boot seals; replace if necessary.

Odometer Reading Date

Repair Order # Dealer Code

Signature Authorized Chrysler Dealer

78,000 Miles (130,000 km) or 78 Months Maintenance Service Schedule

- ❏ Change the engine oil and engine oil filter.
- ❏ Rotate tires.

Odometer Reading Date

Repair Order # Dealer Code

Signature Authorized Chrysler Dealer

84,000 Miles (140,000 km) or 84 Months Maintenance Service Schedule

- ❏ Change the engine oil and engine oil filter.
- ❏ Rotate tires.
- ❏ If using your vehicle for any of the following: Dusty or off-road conditions. Inspect the engine air cleaner filter; replace if necessary.
- ❏ Replace the air conditioning filter (if equipped)
- ❏ Inspect the brake linings; replace if necessary.

Odometer Reading Date

Repair Order # Dealer Code

Signature Authorized Chrysler Dealer

90,000 Miles (150,000 km) or 90 Months Maintenance Service Schedule

- ❏ Change the engine oil and engine oil filter.
- ❏ Rotate tires.
- ❏ Replace the engine air cleaner filter.
- ❏ **Replace the spark plugs (2.7L and 5.7L Engines).**
- ❏ **Inspect and replace PCV valve if necessary. †**
- ❏ Inspect the rear axle fluid. Inspect the front axle fluid — All Wheel Drive (AWD).
- ❏ Inspect the transfer case fluid — All Wheel Drive (AWD).
- ❏ Adjust parking brake on vehicles equipped with four-wheel disc brakes.

Odometer Reading Date

Repair Order # Dealer Code

Signature Authorized Chrysler Dealer

96,000 Miles (160,000 km) or 96 Months Maintenance Service Schedule

- ❏ Change the engine oil and engine oil filter.
- ❏ Rotate tires.
- ❏ If using your vehicle for any of the following: Dusty or off-road conditions. Inspect the engine air cleaner filter; replace if necessary.
- ❏ Replace the air conditioning filter (if equipped)
- ❏ Inspect the brake linings; replace if necessary.
- ❏ Inspect the CV joints.
- ❏ Inspect exhaust system.
- ❏ Inspect the front suspension, tie rod ends and boot seals; replace if necessary.
- ❏ Change the rear axle fluid and on models equipped with All Wheel Drive (AWD) change the front axle fluid if using your vehicle for any of the following: police, taxi, fleet, off-road, or frequent trailer towing.

Odometer Reading Date

Repair Order # Dealer Code

Signature Authorized Chrysler Dealer

102,000 Miles (170,000 km) or 102 Months Maintenance Service Schedule

- ❏ Change the engine oil and engine oil filter.
- ❏ Rotate tires.
- ❏ **Replace the spark plugs (3.5L Engines).**
- ❏ **Replace the timing belt (3.5L Engine).**
- ❏ Flush and replace the engine coolant if not done at 60 months.

Odometer Reading Date

Repair Order # Dealer Code

Signature Authorized Chrysler Dealer

108,000 Miles (180,000 km) or 108 Months Maintenance Service Schedule

- ❏ Change the engine oil and engine oil filter.
- ❏ Rotate tires.
- ❏ If using your vehicle for any of the following: Dusty or off-road conditions. Inspect the engine air cleaner filter; replace if necessary.
- ❏ Replace the air conditioning filter (if equipped)
- ❏ Inspect the rear axle fluid. Inspect the front axle fluid — All Wheel Drive (AWD).
- ❏ Inspect the brake linings; replace if necessary.

Odometer Reading Date

Repair Order # Dealer Code

Signature Authorized Chrysler Dealer

114,000 Miles (190,000 km) or 114 Months Maintenance Service Schedule

- ❏ Change the engine oil and engine oil filter.
- ❏ Rotate tires.

Odometer Reading Date

Repair Order # Dealer Code

Signature Authorized Chrysler Dealer

120,000 Miles (200,000 km) or 120 Months Maintenance Service Schedule

- ❏ Change the engine oil and engine oil filter.
- ❏ Rotate tires.
- ❏ Replace the engine air cleaner filter.
- ❏ Replace the air conditioning filter (if equipped)
- ❏ **Replace the spark plugs (2.7L and 5.7L Engines).**
- ❏ Inspect the brake linings; replace if necessary.
- ❏ Adjust parking brake on vehicles equipped with four-wheel disc brakes.
- ❏ Inspect the CV joints.
- ❏ Inspect exhaust system.
- ❏ Inspect the front suspension, tie rod ends and boot seals; replace if necessary.
- ❏ Change the automatic transmission fluid and filter.
- ❏ Change the transfer case fluid if using your vehicle for any of the following: police, taxi, fleet, or frequent trailer towing — All Wheel Drive (AWD).
- ❏ Replace the accessory drive belt (2.7L/3.5L Engines).

Odometer Reading Date

Repair Order # Dealer Code

Signature Authorized Chrysler Dealer

126,000 Miles (210,000 km) or 126 Months Maintenance Service Schedule

- ❏ Change the engine oil and engine oil filter.
- ❏ Rotate tires.
- ❏ Inspect the rear axle fluid. Inspect the front axle fluid — All Wheel Drive (AWD).

Odometer Reading Date

Repair Order # Dealer Code

Signature Authorized Chrysler Dealer

132,000 Miles (220,000 km) or 132 Months Maintenance Service Schedule

- ❏ Change the engine oil and engine oil filter.
- ❏ Rotate tires.
- ❏ If using your vehicle for any of the following: Dusty or off-road conditions. Inspect the engine air cleaner filter; replace if necessary.
- ❏ Replace the air conditioning filter (if equipped)
- ❏ Inspect the brake linings; replace if necessary.

Odometer Reading Date

Repair Order # Dealer Code

Signature Authorized Chrysler Dealer

138,000 Miles (230,000 km) or 138 Months Maintenance Service Schedule

- ❏ Change the engine oil and engine oil filter.
- ❏ Rotate tires.

Odometer Reading Date

Repair Order # Dealer Code

Signature Authorized Chrysler Dealer

144,000 Miles (240,000 km) or 144 Months Maintenance Service Schedule

- ❏ Change the engine oil and engine oil filter.
- ❏ Rotate tires.
- ❏ If using your vehicle for any of the following: Dusty or off-road conditions. Inspect the engine air cleaner filter; replace if necessary.
- ❏ Replace the air conditioning filter (if equipped)
- ❏ Inspect the brake linings; replace if necessary.
- ❏ Inspect the CV joints.
- ❏ Inspect exhaust system.
- ❏ Inspect the front suspension, tie rod ends and boot seals; replace if necessary.
- ❏ Change the rear axle fluid and on models equipped with All Wheel Drive (AWD) change the front axle fluid if using your vehicle for any of the following: police, taxi, fleet, off-road, or frequent trailer towing.

Odometer Reading Date

Repair Order # Dealer Code

Signature Authorized Chrysler Dealer

150,000 Miles (250,000 km) or 150 Months Maintenance Service Schedule

- ❏ Change the engine oil and engine oil filter.
- ❏ Rotate tires.
- ❏ Replace the engine air cleaner filter.
- ❏ **Replace the spark plugs (2.7L and 5.7L Engines).**
- ❏ Inspect the transfer case fluid — All Wheel Drive (AWD).
- ❏ Adjust parking brake on vehicles equipped with four-wheel disc brakes.

Odometer Reading Date

Repair Order # Dealer Code

Signature Authorized Chrysler Dealer

† This maintenance is recommended by the manufacturer to the owner, but is not required to maintain emissions warranty.

WARNING!

You can be badly injured working on or around a motor vehicle. Do only service work for which you have the knowledge and the right equipment. If you have any doubt about your ability to perform a service job, take your vehicle to a competent mechanic.

IF YOU NEED CONSUMER ASSISTANCE

CONTENTS

- Suggestions For Obtaining Service For Your Vehicle 451
  - Prepare For The Appointment 451
  - Prepare A List 451
  - Be Reasonable With Requests 451
- If You Need Assistance 451
  - Chrysler LLC Customer Center 452
  - Chrysler Canada Inc. Customer Center 452
  - In Mexico Contact 452
  - Customer Assistance For The Hearing Or Speech Impaired (TDD/TTY) 453
  - Service Contract 453
- Warranty Information (U.S. Vehicles Only) 454
- MOPAR® Parts 454
- Reporting Safety Defects 454
  - In The 50 United States And Washington, D.C. 454
  - In Canada 455

■ Publication Order Forms 455

■ Department Of Transportation Uniform Tire Quality Grades 457

□ Treadwear 457

□ Traction Grades 457

□ Temperature Grades 458

SUGGESTIONS FOR OBTAINING SERVICE FOR YOUR VEHICLE

Prepare For The Appointment

If you're having warranty work done, be sure to have the right papers with you. Take your warranty folder. All work to be performed may not be covered by the warranty. Discuss additional charges with the service manager. Keep a maintenance log of your vehicle's service history. This can often provide a clue to the current problem.

Prepare A List

Make a written list of your vehicle's problems or the specific work you want done. If you've had an accident or work done that is not on your maintenance log, let the service advisor know.

Be Reasonable With Requests

If you list a number of items and you must have your vehicle by the end of the day, discuss the situation with the service advisor and list the items in order of priority. At many authorized dealers, you may obtain a rental vehicle at a minimal daily charge. If you need a rental, it is advisable to make these arrangements when you call for an appointment.

IF YOU NEED ASSISTANCE

The manufacturer and its authorized dealers are vitally interested in your satisfaction. We want you to be happy with our products and services.

Warranty service must be done by an authorized dealer. We strongly recommend that you take the vehicle to an authorized dealer. They know you and the vehicle best, and are most concerned that you get prompt and high quality service. The manufacturer's authorized dealers have the facilities, factory-trained technicians, special tools, and the latest information to ensure the vehicle is fixed correctly and in a timely manner.

This is why you should always talk to an authorized dealer's service manager first. Most matters can be resolved with this process.

- If for some reason you are still not satisfied, talk to the general manager or owner of the authorized dealership. They want to know if you need assistance.
- If an authorized dealership is unable to resolve the concern, you may contact the manufacturer's customer center.

Any communication to the manufacturer's customer center should include the following information:

- Owner's name and address
- Owner's telephone number (home and office)
- Authorized dealership name
- Vehicle Identification Number (VIN)
- Vehicle delivery date and mileage

Chrysler LLC Customer Center
P.O. Box 21–8004
Auburn Hills, MI 48321–8004
Phone: (800) 992-1997

Chrysler Canada Inc. Customer Center
P.O. Box 1621
Windsor, Ontario N9A 4H6
Phone: (800) 465–2001

In Mexico contact:
Av. Prolongacion Paseo de la Reforma, 1240
Sante Fe C.P. 05109
Mexico, D. F.
In Mexico City: 5081-7568
Outside Mexico City: 1-800-505-1300

Customer Assistance For The Hearing Or Speech Impaired (TDD/TTY)

To assist customers who have hearing difficulties, the manufacturer has installed special TDD (Telecommunication Devices for the Deaf) equipment at its customer center. Any hearing or speech impaired customer, who has access to a TDD or a conventional teletypewriter (TTY) in the United States, can communicate with the manufacturer by dialing 1–800–380–CHRY.

Service Contract

You may have purchased a service contract for a vehicle to help protect you from the high cost of unexpected repairs after the manufacturer's New Vehicle Limited Warranty expires. The manufacturer stands behind only the manufacturer's service contracts. If you purchased a manufacturer's service contract, you will receive Plan Provisions and an Owner Identification Card in the mail within three weeks of the vehicle delivery date. If you have any questions about the service contract, call the manufacturer's Service Contract National Customer Hotline at 1-800-521-9922.

The manufacturer will not stand behind any service contract that is not the manufacturer's service contract. It is not responsible for any service contract other than the manufacturer's service contract. If you purchased a service contract that is not a manufacturer's service contract, and you require service after the manufacturer's New Vehicle Limited Warranty expires, please refer to the contract documents, and contact the person listed in those documents.

We appreciate that you have made a major investment when you purchased the vehicle. An authorized dealer has also made a major investment in facilities, tools, and training to assure that you are absolutely delighted with

the ownership experience. You'll be pleased with their sincere efforts to resolve any warranty issues or related concerns.

WARNING!

Engine exhaust, some of its constituents, and certain vehicle components contain, or emit, chemicals known to the State of California to cause cancer and birth defects, or other reproductive harm. In addition, certain fluids contained in vehicles and certain products of component wear contain, or emit, chemicals known to the State of California to cause cancer and birth defects, or other reproductive harm.

WARRANTY INFORMATION (U.S. Vehicles Only)

See the Warranty Information Booklet for the terms and provisions of Chrysler Motors LLC warranties applicable to this vehicle.

MOPAR® PARTS

Mopar® fluids, lubricants, parts, and accessories are available from an authorized dealer. They will help keep the vehicle operating at its best.

REPORTING SAFETY DEFECTS

In The 50 United States And Washington, D.C.

If you believe that your vehicle has a defect that could cause a crash or cause injury or death, you should immediately inform the National Highway Traffic Safety Administration (NHTSA) in addition to notifying the manufacturer.

If NHTSA receives similar complaints, it may open an investigation, and if it finds that a safety defect exists in

a group of vehicles, it may order a recall and remedy campaign. However, NHTSA cannot become involved in individual problems between you, your authorized dealer, and the manufacturer.

To contact NHTSA, you may either call the Auto Safety Hotline toll free at 1–888–327–4236 (TTY: 1–800–424–9153), or go to http://www.safercar.gov; or write to: Administrator, NHTSA, 400 Seventh Street, SW., Washington, D.C. 20590. You can also obtain other information about motor vehicle safety from http://www.safercar.gov.

In Canada

If you believe that your vehicle has a safety defect, you should contact the Customer Service Department immediately. Canadian customers who wish to report a safety defect to the Canadian government should write to: Transport Canada, Motor Vehicle Defect Investigations and Recalls, 2780 Sheffield Road, Ottawa, Ontario K1B 3V9.

PUBLICATION ORDER FORMS

To order the following manuals, you may use either the website or the phone numbers listed below. Visa, Mastercard, American Express, and Discover orders are accepted. If you prefer mailing your payment, please call for an order form.

NOTE: A street address is required when ordering manuals (no P.O. Boxes).

- *Service Manuals*

  These comprehensive Service Manuals provide the information that students and professional technicians need in diagnosing/troubleshooting, problem solving, maintaining, servicing, and repairing Chrysler LLC

vehicles. A complete working knowledge of the vehicle, system, and/or components is written in straightforward language with illustrations, diagrams, and charts.

- *Diagnostic Procedure Manuals*

  Diagnostic Procedure Manuals are filled with diagrams, charts and detailed illustrations. These practical manuals make it easy for students and technicians to find and fix problems on computer-controlled vehicle systems and features. They show exactly how to find and correct problems the first time, using step-by-step troubleshooting and drivability procedures, proven diagnostic tests and a complete list of all tools and equipment.

- *Owner's Manuals*

  These Owner's Manuals have been prepared with the assistance of service and engineering specialists to acquaint you with specific Chrysler LLC vehicles. Included are starting, operating, emergency and maintenance procedures as well as specifications, capabilities and safety tips.

Call toll free at:

- **1–800–890–4038 (U.S.)**
- **1–800–387–1143 (Canada)**

Or

Visit us on the Worldwide Web at:

- **www.techauthority.com**

DEPARTMENT OF TRANSPORTATION UNIFORM TIRE QUALITY GRADES

The following tire grading categories were established by the National Highway Traffic Safety Administration. The specific grade rating assigned by the tire's manufacturer in each category is shown on the sidewall of the tires on your vehicle.

All passenger car tires must conform to Federal safety requirements in addition to these grades.

Treadwear

The Treadwear grade is a comparative rating, based on the wear rate of the tire when tested under controlled conditions on a specified government test course. For example, a tire graded 150 would wear one and one-half times as well on the government course as a tire graded 100. The relative performance of tires depends upon the actual conditions of their use, however, and may depart significantly from the norm due to variations in driving habits, service practices, and differences in road characteristics and climate.

Traction Grades

The Traction grades, from highest to lowest, are AA, A, B, and C. These grades represent the tire's ability to stop on wet pavement, as measured under controlled conditions on specified government test surfaces of asphalt and concrete. A tire marked C may have poor traction performance.

WARNING!

The traction grade assigned to this tire is based on straight-ahead braking traction tests, and does not include acceleration, cornering, hydroplaning, or peak traction characteristics.

Temperature Grades

The temperature grades are A (the highest), B, and C, representing the tire's resistance to the generation of heat and its ability to dissipate heat, when tested under controlled conditions on a specified indoor laboratory test wheel. Sustained high temperature can cause the material of the tire to degenerate and reduce tire life, and excessive temperature can lead to sudden tire failure. The grade C corresponds to a level of performance, which all passenger car tires must meet under the Federal Motor Vehicle Safety Standard No. 109. Grades B and A represent higher levels of performance on the laboratory test wheel, than the minimum required by law.

WARNING!

The temperature grade for this tire is established for a tire that is properly inflated and not overloaded. Excessive speed, under-inflation, or excessive loading, either separately or in combination, can cause heat buildup and possible tire failure.

INDEX

About Your Brakes 292
ABS (Anti-Lock Brake System) 294
Adding Engine Coolant (Antifreeze) 399
Adding Fuel 337
Adding Washer Fluid 393
Additives, Fuel 335
Adjustable Pedals 140
Air Cleaner, Engine (Engine Air Cleaner Filter) . . . 389
Air Conditioner Maintenance 391
Air Conditioning 253,255
Air Conditioning Controls 253
Air Conditioning Filter 262,392
Air Conditioning, Operating Tips 263
Air Conditioning Refrigerant 391,392
Air Conditioning System 253,255,256,391
Air Pressure, Tires 311
Airbag 52
Airbag Deployment 59,62
Airbag Light 60,65,79,175
Airbag Maintenance 64
Airbag, Side 54,60
Airbag, Window (Side Curtain) 54,60
Alarm, Panic 24
Alarm (Security Alarm) 18,180
Alarm System (Security Alarm) 18
All Wheel Drive (AWD) 286,405
Alterations/Modifications, Vehicle 7
Antenna, Satellite Radio 243
Antifreeze (Engine Coolant) 398,399,427
  Disposal 400
Anti-Lock Brake System (ABS) 294,296
Anti-Lock Warning Light 182
Anti-Theft Security Alarm (Theft Alarm) 18
Appearance Care 406
Arming Theft System (Security Alarm) 18
Assistance Towing 103
Auto Down Power Windows 36
Auto Unlock, Doors 31

Auto Up Power Windows 37
Automatic Dimming Mirror 86
Automatic Door Locks 30,31
Automatic Headlights 132
Automatic Oil Change Indicator 177,186
Automatic Temperature Control (ATC) 256
Automatic Transaxle
  Special Additives 405
Automatic Transmission 276,282,404,405
  Adding Fluid 405,430
  Autostick 286
  Fluid and Filter Changes 405
  Fluid Change 405
  Fluid Level Check 404
  Fluid Type 430
  Gear Ranges 277,282
  Overdrive 278
  Shifting 276,282
  Special Additives 405
  Torque Converter 280
Automatic Transmission Limp Home Mode . . 281,285
Autostick 286
Axle Fluid 430
Axle Lubrication (Axle Fluid) 430

Battery 389
  Emergency Starting 369
  Jump Starting 369
  Keyless Transmitter Replacement (RKE) 25
  Location 370,390
Belts, Seat 42,79
Body Mechanism Lubrication 392
B-Pillar Location 306
Brake Assist System 297
Brake Control System, Electronic 296
Brake Fluid 430
Brake, Parking 292
Brake System 402

Anti-Lock (ABS) 294
Fluid Check 403,430
Master Cylinder 403
Parking 292
Warning Light 179
Brakes 402
Brake/Transmission Interlock 275
Break-In Recommendations, New Vehicle 77
Brightness, Interior Lights 136
Bulb Replacement 418,419
Bulbs, Light 80,418

Calibration, Compass 191
Capacities, Fluid 427
Caps, Filler
Fuel 337
Oil (Engine) 387
Power Steering 291
Radiator (Coolant Pressure) 400
Car Washes 407
Carbon Monoxide Warning 78,336
Cargo (Vehicle Loading) 340
Cellular Phone 89,252
Certification Label 340
Chains, Tire 319
Changing A Flat Tire 357
Chart, Tire Sizing 303
Check Engine Light
(Malfunction Indicator Light) 383
Checking Your Vehicle For Safety 78
Checks, Safety 78
Child Restraint 67,69,72,74
Child Restraint Tether Anchors 71,72
Child Safety Locks 33
Clean Air Gasoline 333
Cleaning
Wheels 408
Windshield Wiper Blades 393

Climate Control 253
Clock 199,213,216,226
Coin Holder 159
Compact Disc (CD) Maintenance 252
Compact Spare Tire 313
Compass 190
Compass Calibration 191
Compass Variance 191
Computer, Trip/Travel 187
Connector
  UCI 236
  Universal Consumer Interface (UCI) 236
Console, Floor 159
Console, Overhead 145
Contract, Service 453
Coolant Pressure Cap (Radiator Cap) 400
Cooling System 397
  Adding Coolant (Antifreeze) 399
  Coolant Capacity 427
  Coolant Level 397,401
  Disposal of Used Coolant 400
  Drain, Flush, and Refill 398
  Inspection 401
  Points to Remember 401
  Pressure Cap 400
  Radiator Cap 400
  Selection of Coolant (Antifreeze) 398,427,429
Corrosion Protection 406
Cruise Control (Speed Control) 141
Cruise Light 172
Cupholders 158,410
Customer Assistance 451
Customer Programmable Features 193

Data Recorder, Event 65
Daytime Brightness, Interior Lights 136
Daytime Running Lights 133
Dealer Service 385

Deck Lid, Emergency Release 41
Deck Lid, Power Release 39
Defroster, Rear Window 163
Defroster, Windshield 80,254,260
Delay (Intermittent) Wipers 137
Diagnostic System, Onboard 382
Dimmer Switch, Headlight 135
Dipsticks
  Oil (Engine) 385,386
  Power Steering 291
Disabled Vehicle Towing 374
Disposal
  Antifreeze (Engine Coolant) 400
  Engine Oil 388
Door Locks 29
Door Locks, Automatic 30
Door Opener, Garage 146
Driving
  On Slippery Surfaces 287
  Through Flowing, Rising, or Shallow Standing Water 288
DVD Player (Video Entertainment System™) 248

Electric Rear Window Defrost 163
Electric Remote Mirrors 88
Electrical Power Outlets 155
Electronic Brake Control System 296
  Anti-Lock Brake System 296
  Brake Assist System 297
  Electronic Stability Program 298
  Traction Control System 297
Electronic Power Distribution Center (Fuses) 411
Electronic Speed Control (Cruise Control) 141
Electronic Stability Program (ESP) 298
Electronic Throttle Control Warning Light 173
Electronic Vehicle Information Center (EVIC) 183
Emergency Deck Lid Release 41

Emergency, In Case of
Freeing Vehicle When Stuck 372
Hazard Warning Flasher 356
Jacking 357
Jump Starting 369
Overheating 356
Towing 374
Emergency Trunk Release 41
Emission Control System Maintenance 383,432
Engine 379,380,381
Air Cleaner 389
Block Heater 272
Break-In Recommendations 77
Checking Oil Level 385,386
Compartment 379,380,381
Coolant (Antifreeze) 397,429
Cooling 397
Exhaust Gas Caution 78,336
Fails to Start 271
Flooded, Starting 271
Fuel Requirements 332
Jump Starting 369
Oil 385,427,429
Oil Change Interval 177,186,386
Oil Filler Cap 387
Oil Filter 388
Oil Filter Disposal 388
Oil Selection 387,427
Oil Synthetic 388
Overheating 356
Temperature Gauge 173
Engine Oil Viscosity 387
Enhanced Accident Response Feature 63
Ethanol 333
Event Data Recorder 65
Exhaust Gas Caution 78,336,395
Exhaust System 78,394
Exterior Folding Mirrors 87

Exterior Lighting 131
Exterior Lights 80

Filler Location Fuel 337
Filters
  Air Cleaner 389
  Air Conditioning 262,392
  Engine Oil 388,429
  Engine Oil Disposal 388
Flashers
  Hazard Warning 356
  Turn Signal 80,134,174
Flash-To-Pass 135
Flat Tire Changing 357
Flooded Engine Starting 271
Floor Console 159
Fluid, Brake 430
Fluid Capacities 427
Fluid Leaks 80
Fluid Level Checks
  Automatic Transmission 404
  Brake 403
  Cooling System 397
  Engine Oil 385,386
  Power Steering 291
  Transfer Case 405
Fluids 429
Fluids, Lubricants and Genuine Parts 429
Fog Lights 133,176
Folding Rear Seat 128
Freeing A Stuck Vehicle 372
Fuel 332
  Adding 337
  Additives 335
  Clean Air 333
  Ethanol 333
  Filler Cap (Gas Cap) 337
  Gasoline 332

Gauge 172
Materials Added 335
Methanol 333
Octane Rating 332,429
Requirements 332
Specifications 429
Tank Capacity 427
Fuel System Caution 338
Fueling 337
Fuses 411

Garage Door Opener (HomeLink®) 146
Gas Cap (Fuel Filler Cap) 337,382
Gasoline, Clean Air 333
Gasoline, Reformulated 333
Gauges
Coolant Temperature 173
Fuel 172
Odometer 177
Speedometer 172
Tachometer 172
Gear Ranges 277,282
General Information 18,26,117,332
General Maintenance 385
Glass Cleaning 409
Gross Axle Weight Rating 340,343
Gross Vehicle Weight Rating 340,342
GVWR 340

Hands-Free Phone (uconnect) 89
Hazard
Driving Through Flowing, Rising, or Shallow Standing Water 288
Hazard Warning Flasher 356
Head Restraints 126
Headlight Washers 393
Headlights 422
Automatic 132

Bulb Replacement 419
Cleaning 409
Delay 132
High Beam/Low Beam Select Switch 135
Lights On Reminder 133
On With Wipers 132,138
Passing 135
Switch 131
Time Delay 132
Washers 393
Heated Mirrors 88
Heated Seats 127
Heater 253
Heater, Engine Block 272
High Beam/Low Beam Select (Dimmer) Switch . . 135
Hitches
Trailer Towing 344
Holder, Coin 159
Holder, Cup 158
HomeLink® (Garage Door Opener) Transmitter . . . 146
Hood Release 129

Ignition 13
Key 12,13
Ignition Key Removal 13
Immobilizer (Sentry Key) 15
Infant Restraint 67,68
Information Center, Vehicle 183
Inside Rearview Mirror 85
Instrument Cluster 170,172
Instrument Panel and Controls 169
Instrument Panel Lens Cleaning 410
Interior Appearance Care 408
Interior Fuses 411
Interior Lights 135
Intermittent Wipers (Delay Wipers) 137
Introduction 4

Jack Location 358
Jack Operation 360
Jacking Instructions 360
Jump Starting 369

Key, Programming 17
Key, Replacement 16
Key, Sentry (Immobilizer) 15
Key-In Reminder 14
Keyless Entry System 20
Keys 12
Kicker Sound System 246
Knee Bolster 52

Lane Change and Turn Signals 134
Lap/Shoulder Belts 42
LATCH (Lower Anchors and Tether
for CHildren) 71,72
Latch Plate 44
Latches 80
  Hood 129
Lead Free Gasoline 332
Leaks, Fluid 80
Life of Tires 316
Light Bulbs 80,418
Lights 80,131
  Airbag 60,65,79,175
  Anti-Lock 182
  Automatic Headlights 132
  Brake Assist Warning 300
  Brake Warning 179
  Bulb Replacement 418,419
  Courtesy/Reading 135,145
  Cruise 172
  Daytime Running 133
  Dimmer Switch, Headlight 134,135
  Electronic Stability Program (ESP) Indicator . . . 300
  Electronic Throttle Control Warning 173

Engine Temperature Warning 175
Exterior 80
Fog 133,176
Hazard Warning Flasher 356
Headlight Switch 131
Headlights 131,422
Headlights On Reminder 133
Headlights On With Wipers 132,138
High Beam 135,176
High Beam Indicator 176
High Beam/Low Beam Select 135
Instrument Cluster 131,172
Intensity Control 136
Interior 135,145
License 426
Lights On Reminder 133
Low Fuel 182
Malfunction Indicator (Check Engine) 183
Map Reading 135,145
Oil Pressure 176
Parade Mode (Daytime Brightness) 136
Passing 135
Reading 135,145
Seat Belt Reminder 176
Service 418,419
Service Engine Soon (Malfunction Indicator) . . . 183
Tire Pressure Monitoring (TPMS) 180,322
Traction Control 300
Turn Signal 80,134,174
Vanity Mirror 88
Voltage 173
Warning (Instrument Cluster Description) 172
Load Leveling System 164
Loading Vehicle 340,341
Capacities 341
Tires 306
Locks 29
Auto Unlock 31

Automatic Door 30
Child Protection 33
Door 29
Power Door 30
Low Tire Pressure System 322
Lower Anchors and Tether for CHildren (LATCH) 71,72
Lubrication, Body 392
Lumbar Support 126

Maintenance Free Battery 389
Maintenance, General 385
Maintenance Procedures 385
Maintenance Schedule 432
Maintenance, Sunroof 155
Malfunction Indicator Light (Check Engine) . . 183,383
Manual, Service 455
Map/Reading Lights 135,145
Master Cylinder (Brakes) 403
Methanol 333
Mini-Trip Computer 187
Mirrors 85
Automatic Dimming 86
Electric Powered 88
Electric Remote 88
Exterior Folding 87
Heated 88
Outside 86
Rearview 85
Vanity 88
Modifications/Alterations, Vehicle 7
Monitor, Tire Pressure System 322
Mopar Parts 384,454
MTBE/ETBE 333
Multi-Function Control Lever 134

New Vehicle Break-In Period 77

Occupant Restraints 41
Octane Rating, Gasoline (Fuel) 332,429
Odometer 172,177
  Trip 172,177
Oil Change Indicator 177,186
Oil Change Indicator, Reset 177,186
Oil, Engine 385,429
  Capacity 427
  Change Interval 177,186,386
  Checking 385,386
  Dipstick 385,386
  Disposal 388
  Filter 388,429
  Filter Disposal 388
  Identification Logo 387
  Materials Added to 388
  Recommendation 387,427
  Synthetic 388
  Viscosity 387,427
Oil Filter, Change 388
Oil Filter, Selection 388
Onboard Diagnostic System 382,383
Opener, Garage Door (HomeLink®) 146
Operating Precautions 382
Operator Manual (Owner's Manual) 4
Outside Rearview Mirrors 86
Overdrive 278
Overhead Console 145
Overheating, Engine 174,356
Owner's Manual (Operator Manual) 4,455

Paint Care 406
Panic Alarm 24
Parking Brake 292
Passing Light 135
Pedals, Adjustable 140
Personal Settings 193
Pets 77

Phone, Cellular 89
Phone, Hands-Free (uconnect) 89
Placard, Tire and Loading Information 306
Power
  Deck Lid Release 39
  Distribution Center (Fuses) 411
  Door Locks 30
  Mirrors 88
  Outlet (Auxiliary Electrical Outlet) 155
  Seats 124
  Steering 291
  Sunroof 152
  Windows 35
Power Steering Fluid 430
Pregnant Women and Seat Belts 51
Preparation for Jacking 360
Pretensioners
  Seat Belts 49
Programmable Electronic Features 193
Programming Transmitters
(Remote Keyless Entry) 20

Radial Ply Tires 313
Radiator Cap (Coolant Pressure Cap) 400
Radio Operation 252
Radio Remote Controls 250
Radio, Satellite (uconnect gps) 241,247
Rear Cupholder 159
Rear Seat, Folding 128
Rear Window Defroster 163
Rear Window Features 163
Rearview Mirrors 85
Reclining Front Seats 124
Recorder, Event Data 65
Recreational Towing 354
Reformulated Gasoline 333
Refrigerant 392
Release, Hood 129

Reminder, Lights On 133
Reminder, Seat Belt 49
Remote Control
  Starting System 26
Remote Keyless Entry (RKE) 20
Remote Sound System (Radio) Controls 250
Remote Starting System 26
Remote Trunk Release 39
Replacement Bulbs 418
Replacement Keys 16
Replacement Parts 384
Replacement Tires 317
Reporting Safety Defects 454
Resetting Oil Change Indicator 177,186
Restraint, Head 126
Restraints, Child 67
Restraints, Occupant 41
Rocking Vehicle When Stuck 372
Rotation, Tires 321
Safety Checks Inside Vehicle 79
Safety Checks Outside Vehicle 80
Safety Defects, Reporting 454
Safety, Exhaust Gas 78
Safety Information, Tire 301
Safety Tips 78
Satellite Radio Antenna 243
Satellite Radio (uconnect studios) 241,247
Schedule, Maintenance 432
Seat Belt Maintenance 410
Seat Belt Reminder 49
Seat Belts 41,42,79
  Adjustable Upper Shoulder Anchorage 48
  And Pregnant Women 51
  Child Restraint 67,68,69,74
  Extender 52
  Front Seat 42,44
  Inspection 79
  Operating Instructions 44

Pretensioners 49
Rear Seat 42
Reminder 176
Untwisting Procedure 48
Seats 122
Adjustment 122
Head Restraints 126
Heated 127
Height Adjustment 124
Lumbar Support 126
Power 124
Rear Folding 128
Reclining 124
Seatback Release 128
Tilting 124
Security Alarm (Theft Alarm) 18
Selection of Coolant (Antifreeze) 398,429
Selection of Oil 387
Self-Sealing Tires 318
Sentry Key (Immobilizer) 15
Sentry Key Programming 17
Sentry Key Replacement 16
Service Assistance 451
Service Contract 453
Service Engine Soon Light
(Malfunction Indicator) 183
Service Manuals 455
Setting the Clock 199,213,216,226
Settings, Personal 193
Shifting 273
Automatic Transmission 273,276,282
Shoulder Belt Upper Anchorage 48
Shoulder Belts 42
Side Airbag 54,60
Side Curtain (Window Airbag) 54
Signals, Turn 80,134,174
Sirius Backseat TV™ (uconnect studios) 247
Slippery Surfaces, Driving On 287

Snow Chains (Tire Chains) 319
Snow Tires 320
Sound System
Kicker 246
Spare Tire 313,314,358
Spark Plugs 429
Specifications
Fuel (Gasoline) 429
Oil 429
Speed Control (Cruise Control) 141
Speedometer 172
Starting 26,269
Automatic Transmission 269
Emergency (Jump Starting) 369
Engine Fails to Start 271
Remote 26
Starting and Operating 269
Starting Procedures 269
Steering
Column Controls 134
Column Lock 139
Power 291
Tilt Column 139
Wheel, Tilt 139
Steering Wheel Mounted Sound
System Controls 250
Storage 159,418
Storage, Vehicle 262,418
Storing Your Vehicle 418
Stuck, Freeing 372
Sun Roof 152
Sunglasses Storage 145
Sunroof Maintenance 155
Supplemental Restraint System - Airbag 52
Sway Control, Trailer 343
Synthetic Engine Oil 388
System, Remote Starting 26

Tachometer 172
Telescoping Steering Column 139
Temperature Control, Automatic (ATC) 256
Temperature Gauge, Engine Coolant 173,357
Tether Anchor, Child Restraint 71
Theft Alarm (Security Alarm) 18
Theft System (Security Alarm) 18
Tilt Steering Column 139
Time Delay, Headlight 132
Tire and Loading Information Placard 306
Tire Identification Number (TIN) 305
Tire Markings 301
Tire Safety Information 301
Tires 80,310,457
  Aging (Life of Tires) 316
  Air Pressure 310
  Chains 319
  Changing 357,360
  Compact Spare 313
  Flat Changing 357
  General Information 310
  High Speed 312
  Inflation Pressures 311
  Jacking 360
  Life of Tires 316
  Load Capacity 306
  Pressure Monitor System (TPMS) 322
  Pressure Warning Light 180
  Quality Grading 457
  Radial 313
  Replacement 317
  Rotation 321
  Safety 301,310
  Self-Sealing 318
  Sizes 303
  Snow Tires 320
  Spare Tire 358
  Spinning 315

Trailer Towing 350
Tread Wear Indicators 316
To Open Hood 129
Tongue Weight/Trailer Weight 347
Torque Converter Clutch 280
Towing 342
24-Hour Towing Assistance 103
Behind a Motor Home 354
Disabled Vehicle 374
Guide 346
Recreational 354
Weight 346
Towing Assistance 103
Towing Vehicle Behind a Motor Home 354
Traction Control 297
Trailer Towing 342
Cooling System Tips 354
Hitches 344
Minimum Requirements 348
Tips 353
Trailer and Tongue Weight 347
Wiring 351
Trailer Towing Guide 346
Trailer Weight 346
Transfer Case 405
Fluid 405,430
Maintenance 406
Transmission 404
Automatic 273,276,282,404
Fluid 430
Range Indicator 277,282
Shifting 273
Transmitter Battery Service
(Remote Keyless Entry) 25
Transmitter, Garage Door Opener (HomeLink®) . . 146
Transmitter Programming
(Remote Keyless Entry) 20
Transmitter, Remote Keyless Entry (RKE) 20

Transporting Pets 77
Tread Wear Indicators 316
Trip Odometer 172,177
Trunk Lid (Deck Lid) 39,41
Trunk Release, Emergency 41
Trunk Release Remote Control 39
Turn Signals 134,174

UCI Connector 236
uconnect (Hands-Free Phone) 89
Uniform Tire Quality Grades 457
Universal Consumer Interface (UCI) Connector . . . 236
Universal Transmitter 146
Unleaded Gasoline 332
Untwisting Procedure, Seat Belt 48

Vanity Mirrors 88
Variance, Compass 191
Vehicle Certification Label 340
Vehicle Identification Number (VIN) 6
Vehicle Loading 306,340,341
Vehicle Modifications/Alterations 7
Vehicle Storage 262,418
Vehicle Theft Alarm (Security Alarm) 18
Video Entertainment System™ (Rear Seat Video System) 248
Viscosity, Engine Oil 387
Voice Recognition System (VR) 117

Warning Flasher, Hazard 356
Warning Lights
(Instrument Cluster Description) 172
Warnings and Cautions 6
Warranty Information 454
Washer, Adding Fluid 393
Washers, Windshield 137,138,393
Washing Vehicle 407

Water
Driving Through 288
Wheel and Wheel Trim 408
Wheel and Wheel Trim Care 408
Wind Buffeting 39,154
Window Airbag (Side Curtain) 54,60
Window Fogging 262
Windows 35
Power 35
Windshield Defroster 80,254,260
Windshield Washers 137,138
Fluid 393
Windshield Wiper Blades 393
Windshield Wipers 137
Wiper Blade Replacement 393
Wiper, Delay 137
Wipers, Intermittent 137

INSTALLATION OF RADIO TRANSMITTING EQUIPMENT

Special design considerations are incorporated into this vehicle's electronic system to provide immunity to radio frequency signals. Mobile two-way radios and telephone equipment must be installed properly by trained personnel. The following must be observed during installation.

The positive power connection should be made directly to the battery and fused as close to the battery as possible. The negative power connection should be made to body sheet metal adjacent to the negative battery connection. This connection should not be fused.

Antennas for two-way radios should be mounted on the roof or the rear area of the vehicle. Care should be used in mounting antennas with magnet bases. Magnets may affect the accuracy or operation of the compass on vehicles so equipped.

The antenna cable should be as short as practical and routed away from the vehicle wiring when possible. Use only fully shielded coaxial cable.

Carefully match the antenna and cable to the radio to ensure a low Standing Wave Ratio (SWR).

Mobile radio equipment with output power greater than normal may require special precautions.

All installations should be checked for possible interference between the communications equipment and the vehicle's electronic systems.

DODGE

SERVICE

STICK WITH THE SPECIALISTS®

Chrysler LLC
81-226-0920

Second Edition

Printed in U.S.A.