OWNER'S MANUAL

OPEL

INTRODUCTION..... 5 1
GETTING TO KNOW YOUR VEHICLE.....9 2
DASHBOARD INSTRUMENTS AND CONTROL.....99 3
INFOTAINMENT SYSTEM..... 133 4
STARTING & OPERATING..... 145 5
ADVANCED DRIVING ASSISTANCE SYSTEMS (ADAS) 178 6
IN CASE OF EMERGENCY 214 7
MAINTENANCE AND VEHICLE CARE 232 8
TECHNICAL SPECIFICATIONS..... 267 9
CUSTOMER INFORMATION 286 10
INDEX.....301 11

CONTENTS

Introduction.....5
Link to Company App and Website 5
How To Use This Manual 6
Propulsion Type 6
Vehicle Modifications / Alterations.....7
Getting to know your vehicle..... 9
Keys 9
Vehicle Security System 16
Doors 18
Windows 24
Mirrors 28
Head Restraints 33
Seats 33
Seat Belts 41
Airbag System 44
Child Restraints 49
Steering Wheel 77
Ignition Switch 79
Wipers and Washers 79
Exterior Lights 81
Interior Lights 87
Sunroof 88
Interior Storage / Interior Features 88
Dashboard Instruments And Control.....99
Instrument Panel 99
Instrument Cluster 102
Warning And Control Indicator Lights..... 107
Climate Controls 120
Display 130
Infotainment System.....133
Introduction about Infotainment System.....133
Radio 137
Multimedia System 140
Starting & Operating..... 145
Starting And Stopping The Engine 145
Stop & Start Automatic Function..147
Brakes 149
Transmission 152
Driving Modes 156
Engine exhaust 157
Fuel 158
Charging 161
Vehicle Loading 171
Trailer Towing 173
Advanced Driving Assistance Systems (ADAS) 178
Introduction To Assistance Systems..... 178
Speed Control Assistance System.....178
Collision Avoidance Assistance System.....187
Vehicle Stability Assistance System 190
Braking Performance Assistance System.....192
Visibility Enhancement Assistance System.....192
Lane Assistance System.....195
Parking and Reverse Operations Assistance System.... 199
Driver's Attention Assistance System.....205
Driver Drowsiness Detection (DDD) 206
Offroad and Low-Range Operations Assistance System.... 208
Utility Assistance Features.....210
In Case Of Emergency 214
Hazard Warning Lights 214
Assist And SOS 214
Warning triangle 217
Jacking the Vehicle and Wheel Changing 217
Tire Repair Kit 220
Jump Starting 224
Towing 229

Maintenance And Vehicle Care 232
Introduction To Maintenance And Vehicle Care 232
Scheduled Servicing 233
Recommended Fluids, Lubricants, and Parts 235
Engine Compartment 238
Vehicle Maintenance 245
Fuses 249
Bulb Replacement 249
Tires and Wheels 258
Vehicle Storage 260
Bodywork-Exterior Care 262
Interior Care 264
Technical Specifications..... 267
Vehicle Identification..... 267
Vehicle Data 269
Engine Data 277
Electric motor 278
Towed loads.....279
Fluids and lubricants 281
Fluid Capacities 283
Wheels and Tires..... 284
Customer Information 286
Declaration of Conformity 286
Fuel consumption and CO Emissions 289
Disposal Prescriptions 289
REACH 290
Registered trademarks 290
Vehicle Data Recording and Privacy 290

INTRODUCTION

Your vehicle is a designed combination of advanced technology, safety, environmental friendliness and economy.
This Owner's Manual provides you with all the necessary information to enable you to drive your vehicle safely and efficiently.
Additionally, video tutorials for some vehicle functions can be viewed on the Touch Screen.
Some functions are only operational when ignition is switched on, when combustion engine is running or when electric engine is ready.
Make sure your passengers are aware of the possible risk of accident and injury which may result from improper use of the vehicle.
You must always comply with the specific laws and regulations of the country that you are in. These laws may differ from the information in this Owner's Manual.
Disregarding the description given in this manual may affect your warranty.
When this Owner's Manual refers to a workshop visit contact a qualified workshop that has the required technical information, skills and equipment. We recommend your Opel Service Partner.
The customer literature pack should always be kept ready to hand in the vehicle.
We wish you many hours of pleasurable driving.

Your Opel Team

Link to Company App and Website

You can access and download the full digital version of the Owner's Manual in the myOpel webportal or on Service Box using the following link:
https://public-service-box.opel.com/OVddb/OV/en_GB/index.html
For direct access to the Owner's Manual, use the QR code below.

You may also find more details and information in the myOpel app.
Installation of the app with the following QR code:

GET IT ON Google Play

Download on the App Store

How To Use This Manual

- This manual describes all options and features available for this model. Certain descriptions, including those for display and menu functions, may not apply to your vehicle due to model variant, country specifications, special equipment or accessories.
- The table of contents at the beginning of this manual and within each section shows where the information is located.
- The index will enable you to search for specific information.
- This Owner's Manual depicts lefthand drive vehicles. Operation is similar for right-hand drive vehicles.
- The Owner's Manual uses the engine identifier code. The corresponding sales designation and engineering code can be found in the section "Technical Specification".
- Directional data, e.g. left or right, or front or back, always relate to the direction of travel.
- Displays may not support your specific language.
- Display messages and interior labeling are written in bold letters.

Safety Messages

⚠ DANGER

Text marked Danger provides information on risk of fatal injury.

Disregarding this information may endanger life.

⚠ WARNING

Text marked Warning provides information on risk of accident or injury.

Disregarding this information may lead to injury.

⚠ CAUTION

Text marked Caution provides information on possible damage to the vehicle.

Disregarding this information may lead to vehicle damage.

Symbols Keys

Note

Environmental protection feature

Van

Crew Cab

Vehicle with third seat row

Page references are indicated with ⇨.
⇨ means "see page".
Page references and index entries refer to the indented headings given in the section table of content.

Propulsion Type

Internal Combustion Engine (ICE)

An ICE vehicle is propelled by an internal combustion engine - diesel or petrol - only.

Battery Electric Vehicle (BEV)

A BEV is propelled exclusively by an electric motor only.
The high voltage battery can be charged while the vehicle is parked using the provided charging cable. Additionally, it is charged through regenerative braking and energy recovery during deceleration.

Vehicle Modifications / Alterations

⚠ WARNING

Do not remove the labels attached in different places on your vehicle. They include safety warnings as well as identification information for the vehicle.

⚠ WARNING

Installing electrical accessories

The fitting of electrical equipment or accessories not approved by the Manufacturer may cause excessive current consumption and faults and failures with the electrical system of your vehicle. Contact a dealer for information on the range of approved accessories.

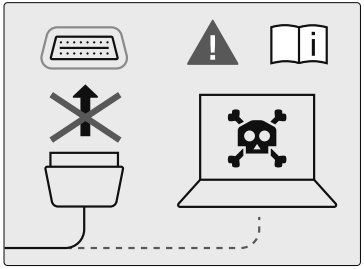

As a safety measure, access to the diagnostic socket, used for the vehicle's electronic systems, is reserved strictly for authorised dealers or qualified workshops, equipped with the special tools required (risk of malfunctions of the vehicle's electronic systems that could cause breakdowns or serious accidents). The Manufacturer cannot be held responsible if this advice is not followed.

Any modification or adaptation not intended or authorised by the Manufacturer or carried out without meeting the technical requirements defined by the Manufacturer will result in the suspension of the commercial warranty.

⚠ WARNING

Installation of accessory radio communication transmitters.

Before installing a radio communication transmitter with an external aerial, you must without fail contact a dealer for the specification of transmitters which can be fitted (frequency, maximum power, aerial position, specific installation requirements), in line with the UN ECE Regulation 10.

Accessories Purchased by the Owner

If after buying the vehicle, you decide to install electrical accessories that require a permanent electrical supply (e.g. radio, satellite anti-theft system, etc.) or accessories that in any case burden the electrical supply, contact a dealer, whose personnel will check whether the electrical system of the vehicle is able to withstand the load required, or whether it needs to be in-

tegrated with a more powerful conventional battery.

⚠ WARNING

Take care when fitting additional spoilers, alloy wheel rims or non-standard wheel hubs: they could reduce the ventilation of the brakes and affect efficiency under sharp, repeated braking or on long descents.

Make sure that nothing obstructs the pedal stroke (mats, etc.).

Electric Devices Installation

Electrical and electronic devices installed after buying the vehicle in the context of after-sales service must carry the following label: The Manufacturer authorizes the installation of transceivers provided that installation is carried out at a specialized center, in a workmanlike fashion and in compliance with manufacturer's specifications.

⚠ WARNING

Traffic police may not allow the car on the road if devices have been installed which modify the features of the car.

This may also cause invalidation of warranty in relation to faults caused by the change either directly or indirectly related to it.
The Manufacturer all not be liable for damage caused by the installation of accessories either not supplied or recommended by the Manufacturer and/or not installed in compliance with the provided instructions.

Radio Transmitting Equipment Installation

Radio transmitter equipment (vehicle mobile phones, CB radios, amateur radio etc.) cannot be used inside the vehicle unless a separate aerial is mounted on the roof.

GETTING TO KNOW YOUR VEHICLE

Keys

⚠ WARNING

Do not attach heavy or bulky items to the ignition key.

⚠ CAUTION

The electronic components inside the key may be damaged if the key is subjected to strong shocks. In order to ensure complete efficiency of the electronic devices inside the key, it should never be exposed to direct sunlight.

Radio Remote Control Function

Locking the vehicle

Locks or unlocks all doors or selected doors.
e.g only the front doors or only the sliding doors together with the tailgate / rear doors

Open or close power sliding doors

Unlocking the vehicle

Depending on the version, the radio remote control enables the operation of the following functions:

- Central locking system ⇨ 10
- Selective unlocking ⇨ 11
- Anti-theft locking system ⇨ 16
- Anti-theft alarm system ⇨ 16
- Tailgate unlocking ⇨ 22
- Power sliding doors ⇨ 20
- Power windows ⇨ 24
- Mirrors folding ⇨ 28
- Vehicle locator lighting ⇨ 88

The remote control has a range of up to several meters, but may also be much less due to external influences.
The hazard warning flashers confirm operation.
Handle with care, protect from moisture and high temperatures and avoid unnecessary operation.

Key with foldaway key section

⚠ WARNING

Never remove the key from ignition switch during driving as this will cause, depending on version, steering wheel lock.

Press button to extend.
To fold the key, first press the button.

Electronic Key System

⚠ WARNING

The electronic key can affect a pacemaker.
Keep the electronic key away from the breast.

Depending on the version, the electronic key system enables a keyless operation of the following functions:

- central locking system
- tailgate unlocking
- ignition switching on and starting the engine
- headlight activation

The electronic key simply needs to be on the driver's person.
Additionally, the electronic key includes the functionality of the radio remote control.
Handle with care, protect from moisture and high temperatures and avoid unnecessary operation.

ⓘ NOTE

To save battery power, the keyless functions are set to stand-by after 21 days of non-use. To reactivate the functions, press a button on the electronic key.

Electronic Immobilizer

The keys contain a code, which must be recognized by the vehicle before starting is possible.
If the system malfunctions, indicated by the display of a message, the engine will not start.
Contact a workshop.

Central Locking System

Unlocks and locks doors, load compartment and fuel filler flap.
A pull on an interior door handle unlocks and opens the respective door.

ⓘ NOTE

In the event of an accident in which airbags or belt pretensioners are deployed, the vehicle is automatically unlocked.

ⓘ NOTE

A short time after unlocking with the remote control the doors are locked automatically if no door has been opened. A precondition is that the

setting is activated in the vehicle personalisation.

Selective unlocking

Selective unlocking allows you to unlock either the front doors and the fuel filler flap or the sliding doors, the rear doors / the tailgate. Selective unlocking has to be configured.

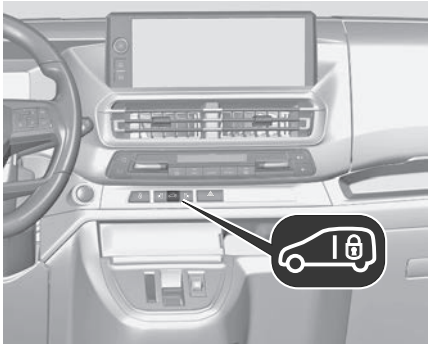

To activate, switch on the ignition and then press more than two seconds. The LED illuminates.
An audible signal is given and depending on the configuration of the vehicle, a message is displayed in Touch Screen.

To deactivate, switch on the ignition and then press for more than two seconds. The LED extinguishes.

Remote control operation

Unlocking

Press unlocking mode can be set. Two settings are selectable:

- All doors and load compartment will be unlocked by pressing .
- Only the driver's door and the passenger door will be unlocked by pressing .

Unlocking the load compartment

Press or press two times to unlock the load compartment only, i.e. sliding doors and rear doors or tailgate.

Locking

Close doors and the load compartment.

Press .
If the vehicle is not closed properly, the central locking system will not work.

Confirmation

Operation of the central locking system is confirmed by the hazard warning flashers. A precondition is that the setting is activated in the vehicle personalisation.

Electronic key system operation

This system allows automatic vehicle locking and unlocking simply by detection of the electronic key. The electronic key must be outside the vehicle.

NOTE

If the vehicle is not closed properly or the electronic key remains in the vehicle, locking will not be permitted. If the vehicle is equipped with an anti-theft alarm system, a warning chime sounds after a few seconds.

NOTE

The electronic key may not operate if placed close to electronic devices such as mobile phones or laptop computers.

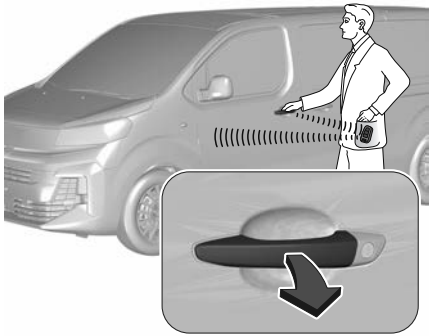

The electronic key must be outside the vehicle, within a range of approx. one meter of the relevant door side.

Unlocking

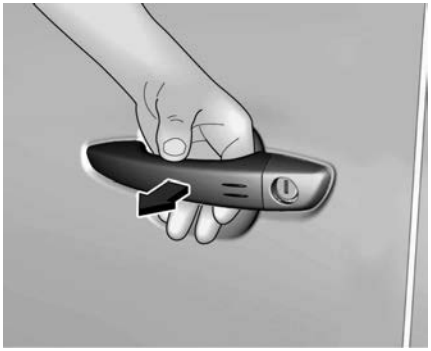

Pass a hand behind the door handle of one of the front doors, the sliding doors, the hinged doors or press the tailgate button.
Keep the hand behind the door handle or keep the tailgate button pressed to open the windows.
Unlocking mode can be set in the vehicle personalization menu in the Touch Screen. Two settings are selectable:

- All doors, the hinged doors / the load compartment and the fuel filler flap will be unlocked by passing a hand behind one of the front door handles, the handles of the sliding doors or the handles of the hinged doors. If the vehicle is equipped with a tailgate, press the tailgate button.
- Only the front doors and the fuel filler flap will be unlocked by passing a hand behind one of front door handles.

Unlocking the load compartment

Only the load compartment, i.e. the hinged doors or the tailgate, will be unlocked by passing a hand behind the hinged doors handle or pressing the tailgate button.
Locking

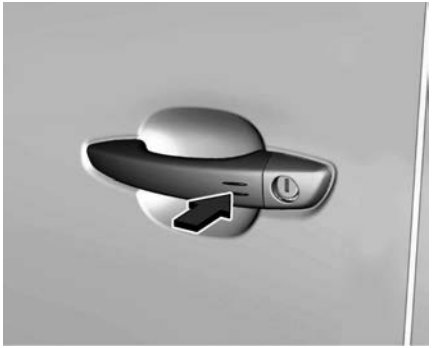

Press on one of the door handles or press the tailgate button.

All doors, load compartment and fuel filler flap will be locked.

Confirmation

Operation of central locking system is confirmed by the hazard warning flashers.

Central locking button

Locks or unlocks all doors and the load compartment from inside the passenger compartment. If the vehicle is equipped with electronic key system, the fuel filler flap is locked or unlocked, too.

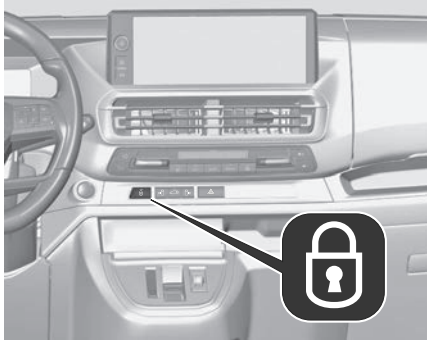

Press 🔒 to lock. The LED in the button illuminates.
Press 🔒 again to unlock. The LED in the button extinguishes.

Operation with the key in case of a central locking system fault

In case of a fault, e.g. vehicle battery or remote control / electronic key battery is discharged, the driver's door can be locked or unlocked with the mechanical key.

Manual unlocking

Electronic key: press and hold the latch to extract the integral key.

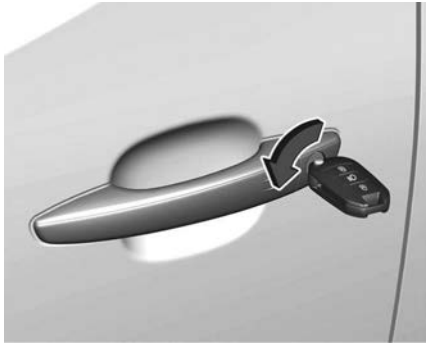

Manually unlock the left front door by inserting and turning the key in the lock cylinder. With working central locking system the vehicle will be unlocked. Without a working central locking system, the other doors can be opened by pulling the interior handle.

The load compartment and fuel filler flap will possibly not be unlocked.
By switching on the ignition, the anti theft locking system is deactivated.

Manual locking

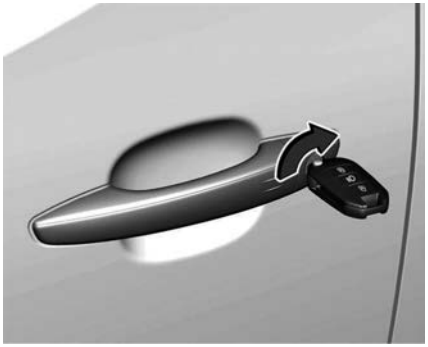

Manually lock the left front door by inserting and turning the key in the lock cylinder. With working central locking system the vehicle will be locked.

To lock the other doors if the central locking system is not working:

- Make sure the child lock is not activated.
- Remove the black cover by using a key and turning clockwise.
- Insert key carefully and move to the inner side of the door without turning the key.
- Remove key and attach black cover.

The fuel filler flap and tailgate are possibly not locked.

Automatic locking

Automatic locking after driving off

This system allows automatic locking of the doors and the tailgate as soon as the speed of the vehicle exceeds 10 km/h.
If one of the doors or the tailgate is open, the automatic central locking does not take place. This is signaled by the sound of the locks rebounding, accompanied by illumination of in the instrument cluster, an audible signal and the display of an alert message.

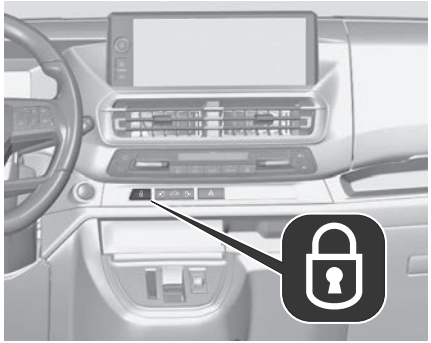

Depending on version, this function can be activated or deactivated at any time. With the ignition on, press until an audible signal starts and a corresponding message is displayed.
The state of the system stays in memory when switching off the ignition.

Automatic relock after unlocking

This feature automatically locks all doors, load compartment and fuel filler flap a short time after unlocking with the remote control or electronic key, provided no door has been opened.

Battery Replacement

Replace the battery as soon as the system no longer operates properly or the range is reduced.
In the event of a discharged battery, illuminates and a warning message is displayed in the Instrument cluster. ⇨ 102

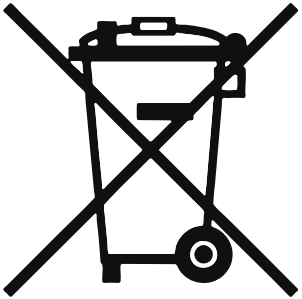

Batteries do not belong in household waste. They must be disposed of at an appropriate recycling collection point.

Battery type: CR2032/3 volts.

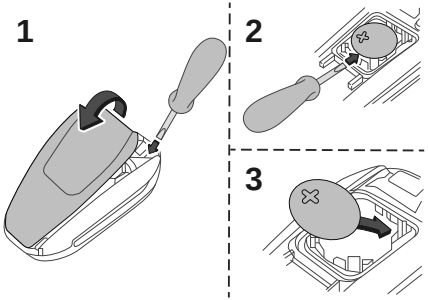

1. To unclip the cover insert a small screwdriver between the back cover and the remote control;
2. Remove the back cover from the remote control;
3. Extract the flat battery from its location;
4. Replace battery with a battery of the same type. Pay attention to the installation position;
5. Clip the cover in place.

Do not throw remote control batteries away, as they contain metals that are harmful to the environment. Take them to an approved disposal point.

⚠ WARNING

This equipment contains a button type battery.
Do not swallow the battery. Risk of chemical burns! Swallowing the battery can cause serious internal burning in only 2 hours and can be fatal.
If batteries have been swallowed or inserted into a part of the body, seek immediate medical advice.
Keep new and used batteries out of the reach of children.
If the battery compartment does not close properly, stop using the product and keep it out of the reach of children.

⚠ WARNING

Risk of explosion if the battery is replaced with an incorrect type! Replace the battery with the same type.

⚠ WARNING

Risk of explosion or leaking of inflammable liquid or gas!
Do not use in/store in/place in an environment where the temperature is extremely high or where the pressure is extremely low due to very high altitude.
Do not try to burn, crush or cut a used battery.

Fault

If the central locking cannot be operated or the engine cannot be started, the cause may be one of the following:

- Fault in radio remote control.
- Electronic key is out of reception range.
- The battery voltage is too low.
- The battery voltage is too high.
- Frequent, repeated operation of the radio remote control while not in range.
- Overload of the central locking system by operating at frequent intervals, the power supply is interrupted for a short time.Interference from higher-power radio waves from other sources.

Manual unlocking ⇨ 10.
Central Locking System ⇨ 10.

Emergency Key

Replacement keys

The key number is specified on a detachable tag. The key number must be quoted when ordering replacement keys as it is a component of the immobilizer system.
The code number of the adapter for the locking wheel nuts is specified on a card. It must be quoted when ordering a replacement adapter.

Vehicle Security System

Anti-theft Locking System

⚠ WARNING

Do not use the system if there are people in the vehicle! The doors cannot be unlocked from the inside.

The system deadlocks all the doors. All doors must be closed otherwise the system cannot be activated.
Unlocking the vehicle disables the mechanical anti-theft locking system. This is not possible with the central locking button.

Activating

Simple key: Insert the key and turn it clockwise twice within 5 seconds.
Remote control: Press 🔒 on the radio remote control twice within five seconds.
Electronic key: Press twice on one of the door handles within five seconds.

Anti-theft Alarm System

⚠ WARNING

Do not use the system if there are people in the vehicle! The doors cannot be unlocked from the inside.

The anti-theft alarm system has been designed to protect the vehicle against theft and break-ins.
The anti-theft alarm system is combined with the anti-theft locking system. The system monitors doors, tailgate, bonnet and the passenger compartment.
Depending on the version of the vehicle, it may not monitor the adjoining load compartment.

Activation

Ignition must be switched off. All doors must be closed and the electronic key must not remain in the vehicle. Otherwise the system cannot be activated.

- Radio remote control: Monitoring of the doors, the tailgate and the bonnet is activated five seconds after locking the vehicle by pressing 🔒. Monitoring of the passenger compartment is activated 45 seconds after locking the vehicle by pressing 🔒.
- Electronic key system: Monitoring of the doors, the tailgate and the bonnet is activated five seconds after locking the vehicle by pressing with a finger or thumb on one of the front door handles at the markings. Monitoring of the passenger compartment is activated 45 seconds after locking the vehicle by pressing with a finger or thumb on one of the front door handles at the markings.

Activation is confirmed by the flashing of the status LED and coming on of the turn lights for a short time.
If a door or the tailgate is not correctly closed and the vehicle is locked via remote control or electronic key system, the vehicle remains unlocked. Howev-

er, the anti-theft alarm system will be activated after 45 seconds.

> **NOTE**
>
> Changes to the vehicle interior such as the use of seat covers and open windows, could impair the function of passenger compartment monitoring.

Activation without monitoring of passenger compartment

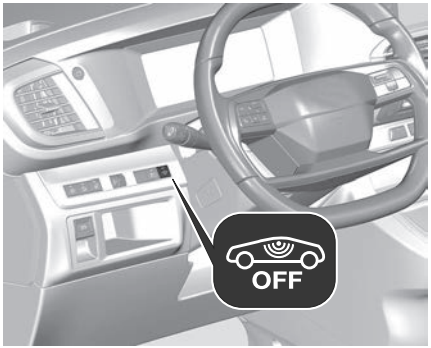

Switch off the monitoring of passenger compartment when animals are being left in the vehicle, because of high volume ultrasonic signals or movements triggering the alarm. Also switch off when the vehicle is on a ferry or train.

1. Switch off ignition.
2. Press OFF within the next ten seconds until the LED of the button illuminates constantly.
3. Get out of the vehicle.
4. Lock the vehicle immediately by using the remote control, pressing one of the door handles or by pressing the tailgate button.

Activation is indicated by the flashing of the status LED.

Indication

LED in the central locking button flashes if the anti-theft alarm system is activated.
Seek the assistance of a workshop in the event of faults.

Deactivation

Radio remote control: Unlocking the vehicle by pressing 🔓 deactivates the anti-theft alarm system.

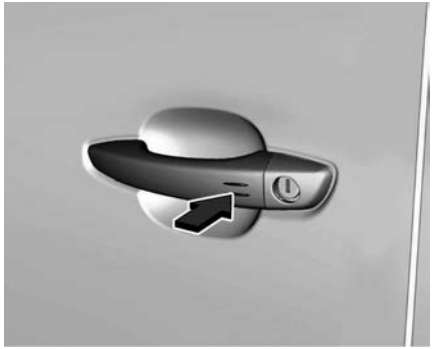

Electronic key system: Unlocking the vehicle by pressing on one of the front door handles at the markings deactivates the anti-theft alarm system.
The electronic key must be outside the vehicle, within a range of approx. one meter of the relevant door side.
The system is not deactivated by unlocking the driver's door with the key or with the central locking button in the passenger compartment.

> **NOTE**
>
> If the vehicle is unlocked and no door is opened, the vehicle is automatically relocked after 30 seconds.

In this case, the anti-theft alarm will be reactivated, too.

Alarm

When triggered, the alarm horn sounds and the hazard warning lights flash simultaneously. The number and duration of alarm signals are stipulated by legislation.
The anti-theft alarm system can be deactivated by pressing 🔓, by pressing on one of the front door handles at the markings with electronic key system.
The LED of the OFF button will extinguish and the turn lights flash for a short time.
A triggered alarm, which has not been interrupted by the driver, will be indicated by the rapid flashing of the LED of the OFF button. If the ignition is switched on, the flashing stops immediately.
If the vehicle's battery is to be disconnected (e.g. for maintenance work), the alarm siren must be deactivated as follows: switch the ignition on then off, then disconnect the vehicle's battery within 15 seconds.
If the battery has been reconnected, wait for ten minutes to restart the engine.

Locking the vehicle without activation of the anti-theft alarm

Lock the vehicle by inserting and turning the integrated key of the remote control or the electronic key system in the lock cylinder of the driver's door.

Malfunction of the remote control

Unlock the vehicle by inserting and turning the integrated key of the remote control or the electronic key system in the lock cylinder of the driver's door.
Open the driver's door.
The horn of the anti-theft alarm will sound.
Switch on ignition.
The horn will stop sounding and the status LED extinguishes.

Immobilizer

The system is part of the ignition switch and checks whether the vehicle is allowed to be started with the key being used.
The immobilizer is activated automatically after the key has been removed from the ignition switch.

NOTE

Radio Frequency Identification (RFID) tags may cause interference with the key. Do not have it placed near the key when starting the vehicle.

NOTE

The immobilizer does not lock the doors. Always lock the vehicle after leaving it.
Switch on the anti-theft alarm system.

Doors

Rear Doors Child Locks

WARNING

Use the child locks whenever children are occupying the rear seats.

Mechanical child locks

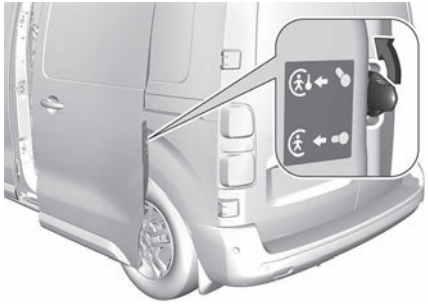

To activate, turn the child lock upwards. The sliding door cannot be opened from the inside.
To deactivate, turn the child lock downwards. The sliding door can be opened from the inside.

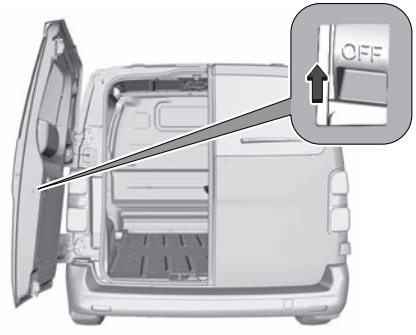

To activate, turn the child lock upwards. The hinged door cannot be opened from the inside.
To deactivate, turn the child lock downwards. The hinged door can be opened from the inside.

Electric child locks

Remotely operated system to prevent opening of the sliding doors via the interior door handles.

Switching on

Press . The indicator light in the button comes on, accompanied by a confirmation message. This indicator light remains on until the child lock is switched off.

Switching off

Press again. The indicator light on button goes off, accompanied by a confirmation message. This indicator light remains on while child lock is switched on.

Sliding Door Operation

Opening

After unlocking, pull the outside door handle and slide the door towards the rear beyond the point of resistance.

To open from inside, push the handle and slide the door towards the rear beyond the point of resistance.

Closing

To close from outside, pull the door handle and slide the door towards the front until it locks.

To close from inside, push the handle and slide the door towards the front until it locks.

⚠ DANGER

Do not drive with the sliding side door open or ajar, e.g. when transporting bulky objects, since toxic exhaust gases, which cannot be seen or smelled, could enter the vehicle. This can cause unconsciousness and even death.

⚠ CAUTION

Ensure the sliding side door is fully closed and secure before driving the vehicle.

⚠ CAUTION

To avoid damage, do not attempt to operate the sliding side door when the fuel filler flap is open.

Power sliding doors

⚠ WARNING

Take care when operating the power sliding doors. Risk of injury, particularly to children.
Take particular care when the vehicle is parked on a slope: open or close the door fully until it latches into its locking position.
Keep a close watch on the moving doors when operating. Ensure that nothing becomes trapped during operation and no-one is standing within the moving area.

The power sliding doors can be operated by:

- Pressing or on the radio remote control
- Pressing or on the electronic key
- Pressing or on the instrument panel
- Pressing or on the door frame
- Hands-free operation with motion sensors below the rear bumper
- Pulling the respective door handle.

Operation with the electronic key

Press or longer to open or close the respective power sliding door.

Hands-free operation

Depending on the vehicle configuration, the vehicle may have one or two hands-free operated sliding doors.

To open or close a sliding door, move the foot below the rear bumper on the respective side back and forth.

The electronic key must be outside the vehicle, within a range of approx. 1 m of the motion sensors. Depending on the configuration of the vehicle, the electronic key has to be located in the respective area. Do not hold the foot longer or move too slow below the bumper.

Initializing the Power Sliding Doors

If the power sliding doors cannot be operated, initialize as follows:

1. Close the door completely by hand.
2. Open the door fully using the electrical control.
3. Close the door fully using the electrical control.
4. Repeat the procedure for the other sliding door.

Tailgate Operation

Opening

After unlocking, press the tailgate button and open the tailgate.

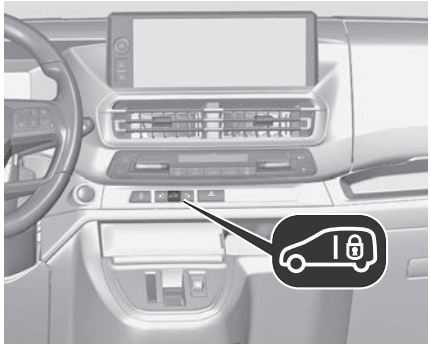

Depending on the version, press to unlock the tailgate from the inside.

Closing

To lower the tailgate use the interior handle. Push the tailgate from above until it is fully closed.
Do not push the tailgate button whilst closing as this will unlock the tailgate again.

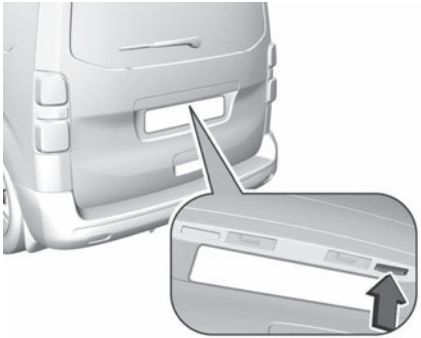

With the electronic key outside the vehicle and within a range of approx. 1 m of the tailgate, press the right tailgate button to lock the vehicle.

General hints for operating tailgate

⚠ DANGER

Do not drive with the tailgate open or ajar, e.g. when transporting bulky objects, since toxic exhaust gases, which cannot be seen or smelled, could enter the vehicle.
This can cause unconsciousness and even death.

⚠ CAUTION

Before opening the tailgate, check overhead obstructions, e.g. a garage door, to avoid damage to the tailgate. Always check the moving area above and behind the tailgate.

ⓘ NOTE

The installation of certain heavy accessories onto the tailgate may affect its ability to remain open.

ⓘ NOTE

At low outside temperatures the tailgate may not open fully by itself.
In this case lift the tailgate manually to its normal end position.

Emergency tailgate opening from inside the vehicle

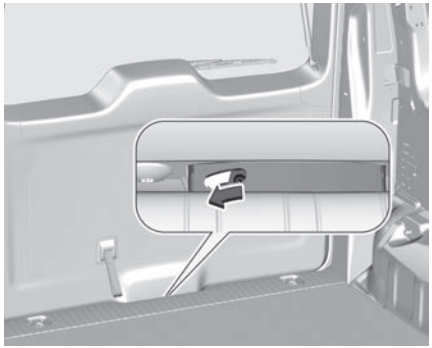

An access hole between the door and the floor enables the tailgate latch to be released using a suitable tool.
Push lever to the left to unlock and open the tailgate.

Hinged doors

Unlock the hinged doors with the remote control or by turning the key in the rear door lock cylinder.

To open the hinged doors, pull the exterior handle.

To release the right hinged door, pull the lever.

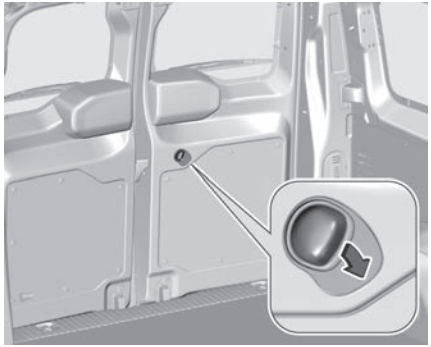

To open the door from inside the vehicle, pull the interior handle.

⚠ WARNING

The rear lights may be obscured if the rear doors are open and the vehicle is parked on the roadside.
Make other road users aware of the vehicle, by using a warning triangle or other equipment specified in the road traffic regulations.

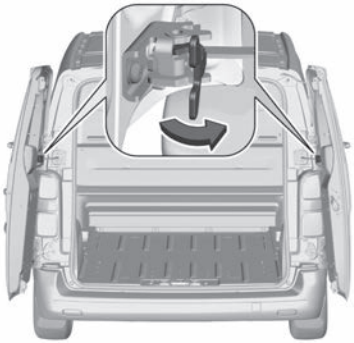

The doors are retained in the 90º position by locking stays. To open the doors to 180º, push the latch and swing open to the desired position.
Before closing the doors ensure that the locking stays are in the 90º position.

⚠ WARNING

Ensure extended opening doors are secured when fully opened.
Opened doors may slam closed due to the force of the wind!

Always close the right hand door before the left hand door.

Windows

Power Windows

⚠ WARNING

Take care when operating the power windows. Risk of injury, particularly to children.
If there are children on the rear seats, switch on the child safety system for the power windows.
Keep a close watch on the windows when closing them.
Ensure that nothing becomes trapped in them as they move.

Switch on ignition to operate power windows.

Operate for the respective window by pushing to open or pulling to close. Pushing or pulling gently to the first detent: window moves up or down as long as the switch is operated.
Pushing or pulling firmly to the second detent then releasing: window moves up or down automatically with safety function enabled. To stop movement, operate the switch once more in the same direction.

Safety function

This function depends upon version.
If the window glass encounters resistance above the middle of the window during automatic closing, it is immediately stopped and opened again.

Override safety function

In the event of closing difficulties due to frost or the like, switch on the ignition, then pull the switch to the first detent and hold. The window moves up without safety function enabled.
To stop movement, release the switch.

Operating windows from outside

The windows can be closed remotely from outside the vehicle.
Press and hold to close windows.
Release button to stop window movement.

Overload

If the windows are repeatedly operated within short intervals, the window operation is disabled for some time.

Initializing the power windows

If the windows cannot be closed automatically (e.g. after disconnecting the vehicle battery), a warning message is displayed in the Instrument cluster. Activate the window electronics as follows:

1. Close doors.
2. Switch on ignition.
3. Push switch until the window is completely open.
4. Pull switch until the window is completely closed and keep pulling for additional two seconds.
5. Repeat for each window.

Rear Window

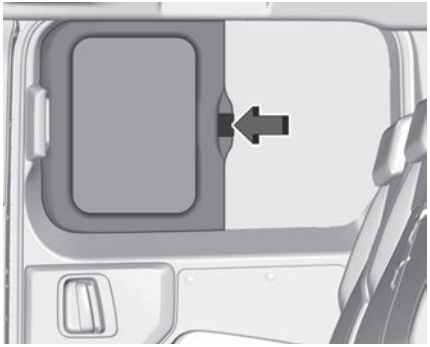

To open and close the rear windows, push the lever and slide the windows backwards or forwards.

Mechanical child lock for rear windows

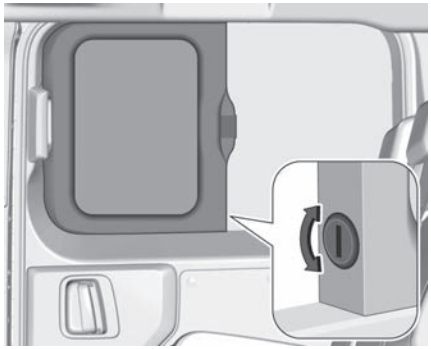

To activate, turn the child lock with the key upwards. The sliding window cannot be opened from the inside.
To deactivate, turn the child lock with the key downwards. The sliding window can be opened from the inside.

Tailgate window

The tailgate window can be opened to give access to the load compartment without opening the tailgate.
The tailgate and the tailgate window cannot be opened at the same time.

⚠ CAUTION

Do not use the rear wiper as handle to open the window.

Opening

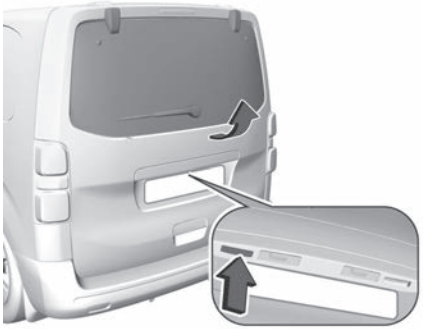

After unlocking, press the button and open the rear window by holding the glass until it is fully open.

Closing

Press the center of the rear window glass until it is fully closed

Heated rear window

Operated by pressing . Depending on the version, the heated rear window is operated together with the heated exterior mirrors.
The heating switches off automatically after a certain time depending on the outside temperature.
Depending on climate control system, is located at a different position.

Windshield

Windshield stickers

Do not attach stickers such as toll road stickers or similar on the windshield in the area of the interior mirror. Otherwise the detection zone of the sensor and the view area of the camera in the mirror housing could be restricted.

Windshield replacement

⚠ CAUTION

If the vehicle has a front-looking camera sensor for the driver assistance systems, it is very important that any windshield replacement is performed accurately according to Manufacturer specifications. Otherwise, these systems may not work properly and there is a risk of unexpected behaviour and / or messages from these systems.

Heated windshield

This function heats the windshield along its bottom and along both sides of the windshield.
Thus, the function allows a fast detaching of the windshield wiper blades if they are frozen to the windshield.
Additionally, an accumulation of snow caused by the operation of the windshield wipers is prevented.

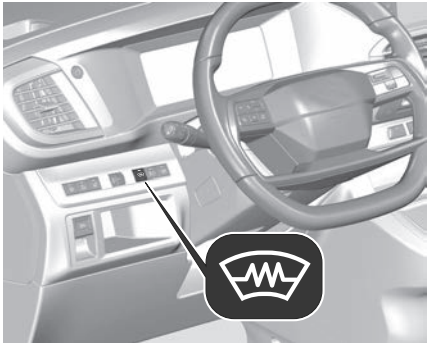

Heating is operated by pressing .
LED in button illuminates.
The heating works only with freezing outside temperatures and switches off automatically after a certain time depending on the outside temperature.
Pressing again switches off the heating operation. LED in button is extinguished.

Sun Visors

The sun visors can be folded down or swiveled to the side to prevent dazzling.
The cover of the mirrors should be closed when driving.
A ticket holder is located on the backside of the sun visor.

Blinds

To reduce sunlight at the second row seats, pull the blind upwards using the grip and engage it at the top of the door frame.

Mirrors

Power Outside Mirrors

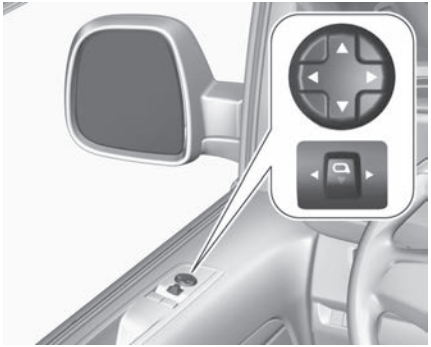

Select the relevant exterior mirror by pushing the mirror button to the left or right.
Adjust the respective mirror with the four-way control.

Folding Mirrors

For pedestrian safety, the exterior mirrors will swing out of their normal mounting position if they are struck with sufficient force. Reposition the mirror by applying slight pressure to the mirror housing.

Electric folding

Pull the mirror button downwards. Both exterior mirrors will fold.
Pull the mirror button downwards again to return both exterior mirrors to their original position.
If an electrically folded mirror is manually extended, pulling mirror button downwards will only electrically extend the other mirror.

Automatic folding

When the vehicle is being locked, both mirrors will fold.
When the vehicle is being unlocked, the mirrors return to their original position.
The function can be deactivated in the vehicle personalisation.

Heated Mirrors

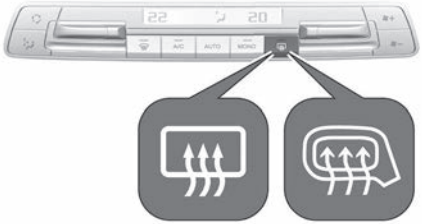

Depending on the version, heating is operated by pressing or .
The heating switches off automatically after a certain time depending on the outside temperature.

Convex Mirrors

The shape of the mirror makes objects appear smaller, which will affect the ability to estimate distances.

Inside Rear view Mirror

Manual anti-dazzle

To reduce dazzle, adjust the lever on the underside of the mirror housing.

Automatic anti-dazzle

Dazzle from following vehicles is automatically reduced, when driving in the dark.

Rear view display mirror

When the ignition is switched on, to improve the visibility of the rear of the vehicle, this system uses a camera to display view of the vehicle's rear environment on the interior rear view mirror. If activated, a camera symbol appears in the upper left corner during 5 seconds.

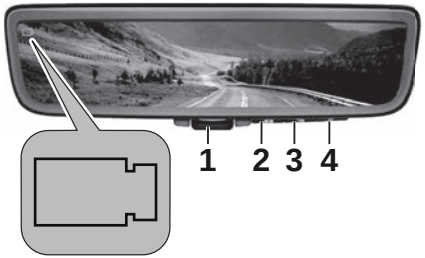

1 Press button to switch on and off.

2 Press button to open setting mode (field of vision angle or brightness adjustment)

3 Press button to decrease brightness or to set the angle downwards (depending on the context)

4 Press button to increase brightness or to set the angle upwards (depending on the context)

- Surveillance rear view : shows a long distance view of the area at the rear.

⚠ WARNING

Please routinely check your exterior mirrors while driving and during maneuvers.

⚠ CAUTION

Some items may not be seen by the rear camera.

⚠ WARNING

Some vehicles may be difficult to see (dark colors, lights off) when the brightness of the screen is reduced using the vehicle's lighting dimmer.

⚠ CAUTION

The image quality may be affected by the environment, the exterior conditions (rain, dirt, dust), the driving mode and the lighting conditions (night, low sun).
In the presence of areas in shade, or in conditions of bright sunlight or inadequate lighting, the image may be darkened.

⚠ WARNING

Obstacles may appear further away than they actually are.
During parking maneuvers and lane changes, it is important to check the sides of the vehicle using the mirrors.
The rear parking sensors also supplement the information on the vehicle's surroundings.

Activation / Deactivation

The system starts when the ignition is switched on. Pull or push the lever 1 to switch to digital or optical mode.

ⓘ NOTE

The optical mode allows you to use the interior mirror without the camera.

Adjust the mirror

ⓘ NOTE

Ensure that the mirror adjustment is done in Optical mode only. Otherwise, there is a risk of a double image in Digital mode.

ⓘ NOTE

- Light reflections may occur in the digital rearview mirror, particularly from the glass roof.
- In optical mode, the mirror provides a direct view through the rear glass.
- In Digital mode, tilting the display slightly downward may result in a sharper image, but it may also increase reflections from rear passengers at night when interior lighting is on.

Settings mode

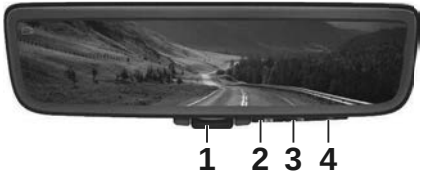

Press the button 2 to display the setting menu (depending on the menu displayed)

Press the button 2 one time to access the brightness setting.

Press the button 2 two times to access the field of vision angle setting.

brightness setting : press arrow buttons 3 and 4 to adjust the brightness of the screen.

field of vision angle : press arrow buttons 3 and 4 to adjust the angle of the camera from up to down.

The setting menu is closed automatically after 5 seconds if the button is not pressed.

Operating limits

The system may be disrupted (or even damaged) and not work in the following situations :

- Installation of a bicycle carrier on the tailgate
- Attachment of a trailer to the tow ball

Fault

In the event of a fault, the reproduction screen becomes black, this symbol is displayed and then the graphical explanation of how to switch to the optical mode is temporarily displayed.

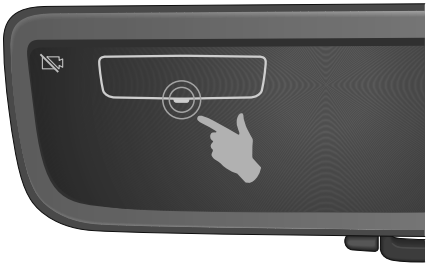

Have it checked by a dealer or a qualified workshop.

- In the event of a stucked button, press of the button for 30 seconds.

⚠ CAUTION

The camera must not be obscured (by a sticker, a bicycle carrier, etc.).

ⓘ NOTE

The field of vision of the rear camera (surveillance rear view and visual reversing aid) may vary depending on the load in the vehicle.

ⓘ NOTE

If a trailer is attached to the towball, when reverse gear is engaged the visual reversing aid will no longer work until the trailer is disconnected. The surveillance rear view becomes the default view.

ⓘ NOTE

If the system develops a malfunction, go to a dealer to avoid any safety problems.

- Switch to “Optical Position” when someone remains in the vehicle, when the vehicle's electrical status is “Stop”. After a while, the image in the monitor disappears, which may cause discomfort or confusion for the person inside.
- Digital display mirror monitor can cause discomfort for people with presbyopia in “Numerical Position“.
- Digital display mirror monitor can cause discomfort for people sensitive to seasickness in “Numerical Position“.
- Don’t be distracted by the Rear view display mirror monitor, due to the quality of the images, especially at night, downtown.
- Rear view display mirror can potentially generate the following artifacts : "Smear", "Blooming and lens flare“ and “Point light sources".
- Rear view display mirror can provide an erroneous rear view in numerical position when tailgate is open.
- Be aware of risk of wrong camera orientation after shock.
- Be careful of risk of camera field view hidden by bicycle rack or by trailer.
- Digital display mirror monitor stays activated one minute after the locking of the vehicle when in “Numerical Position“.

Head Restraints

Head Restraints Position

The upper edge of the head restraint should be at upper head level. If this is not possible for extremely tall people, set to highest position, and set to lowest position for small people.

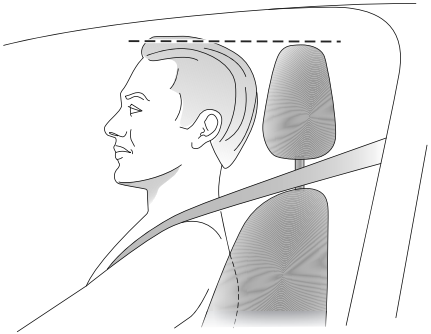

⚠ WARNING

Only drive with the head restraint set to the proper position.

Adjustment

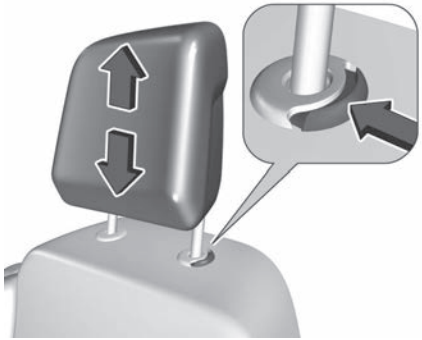

Move the head restraint upwards or downwards. If the head restraint is engaged press the catch and move the head restraint.

Removal

Move the head restraint upwards and remove it. If the head restraint is engaged press the catch and move the head restraint.
The headrests of passenger seats with removable flap are fixed. They can not be adjusted or removed.

Installation

Engage the head restraint rods in the openings and push it downwards.

Seats

Front Seat Position

⚠ WARNING

Do not sit closer than 25 cm to the steering wheel, to allow safe airbag deployment.

⚠ WARNING

For safety reasons, adjustments must only be made when the vehicle is stationary.

Before taking to the road and to make the most of the ergonomic layout of

the instruments and controls, carry out these adjustments in the following order:

- Sit with buttocks as far back against the backrest as possible.
  Adjust the distance between the seat and the pedals so that legs are slightly angled when pressing the pedals. Slide the front passenger seat as far back as possible.
- Set seat height high enough to have a clear field of vision on all sides and of all display instruments. There should be at least one hand of clearance between head and the roof frame. Your thighs should rest lightly on the seat without pressing into it.
- Adjust the head restraint so that its upper edge is at upper head level.
- Sit with shoulders as far back against the backrest as possible.
  Set the backrest rake so that it is possible to easily reach the steering wheel with arms slightly bent. Maintain contact between shoulders and the backrest when turning the steering wheel. Do not angle the backrest too far back. We recommend a maximum rake of approx. 25°.
- Adjust seat and steering wheel in a way that the wrist rests on top of the steering wheel while the arm is fully extended and shoulders are on the backrest.
- Adjust the lumbar support so that it supports the natural shape of the spine

⚠ WARNING

Once these adjustments have been made, check that the instrument panel can be viewed correctly from your driving position.

⚠ WARNING

Before moving the seat backwards, ensure that there is no person or object that might prevent the full travel of the seat.
There is a risk of trapping or pinching passengers if present in the rear seats or of jamming the seat if large objects are placed on the floor behind the seat.

Manual Front Seats

Drive only with engaged seats and backrests.

Longitudinal adjustment

Pull the handle, slide the seat, then release the handle. Try to move the seat back and forth to ensure that the seat is locked in place.

Backrest inclination

Turn handwheel to adjust inclination. Do not lean on the backrest while adjusting.

Seat height

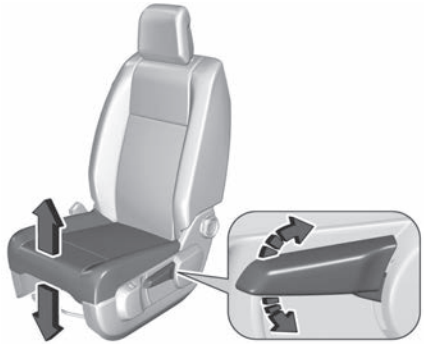

Lever pumping motion.

up	seat higher
down	seat lower

Lumbar support

Turn the handwheel to suit personal requirements.

Power Front Seats

⚠ WARNING

Care must be taken when operating the power seats. There is a risk of injury, particularly for children. Objects could become trapped.

⚠ CAUTION

Ensure that there are no objects stored underneath a seat or blocking the moving area. Risk of damage to the controls or impeding seat travel.

Longitudinal adjustment

Move the switch forwards / backwards.

Seat height

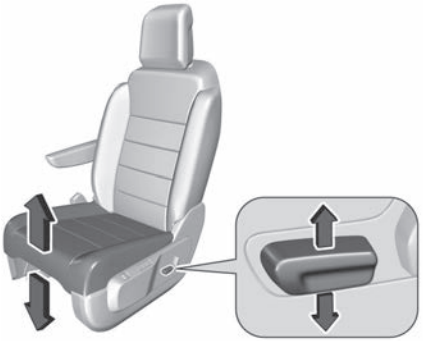

Move the switch upwards / downwards.

Backrest inclination

Tilt the switch forwards / backwards.

Lumbar support

Press to suit personal requirements.

Heated Seats

The seat heating thumb wheel can be located at the seat or on the instrument panel.
Activate seat heating by turning the thumb wheel for the respective front seat. There are three intensity levels of heating.
To deactivate the seat heating turn the thumb wheel to 0.
The heating works only when the outside temperature is below 20 °C.
Prolonged use of the highest setting for people with sensitive skin is not recommended.
Seat heating is operational when engine is running and during an Autostop.

Massage Seats

Activate the back massage function by pressing . The LED in the button illuminates to indicate activation.
The massage function is activated for a period of 1 hour. During this time, massage is performed in six cycles with breaks in between.
To adjust the intensity of the massage press . Two levels of massage are available.
Pressing once more deactivates massage function. The LED goes off.
The massage function is operational when engine is running and during an Autostop.

Easy Entry

To permit an easy entrance to the seats of the third row, the seats of the second row can be tilted.

Pull the release lever and tilt seat to the front.
To restore the original position tilt seat back until it is engaged.

Folding Front Seats

Depending on version, the front seats can be folded flat to the table position.

Front seats backrest

Folding

Slide the front seat as far back as possible, to avoid contact with the instrument panel during folding.
Push the head restraint down or remove it before folding backrest.

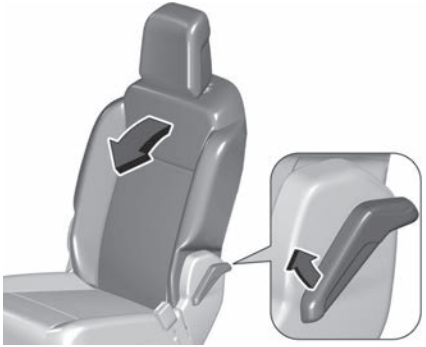

Pull the lever, fold the backrest fully forwards and release the lever.

NOTE

Note In the event of an accident, passengers can be evacuated from the passenger compartment by completely folding down the driver's seat.

WARNING

When the front passenger seat is in the folded position, the front passenger airbag system must be deactivated.

Unfolding

To restore the seat to the upright position, pull the lever and raise backrest fully. Then release the lever.

Bench seat front passenger side

Folding

To lift the seat cushion pull the loop and raise the seat cushion against the backrest.

> ⚠ WARNING
>
> Never put the hand underneath the seat while folding the seat.
> Risk of injury.

Unfolding

To restore the seat cushion to the original position, lower the seat cushion till it is engaged.

Front Armrest

The armrest has several adjustment options.

1. Fold it completely up.
2. Fold it completely down.
3. Raise the armrest slowly and engage it at the desired position.

Rear Seat Position

> ⚠ WARNING
>
> When seats are being adjusted or folded, keep hands and feet away from the moving area. Risk of injury.
> Ensure that there are no objects on the anchor points or rails.
> Never adjust seats while driving as they could move uncontrollably.
> Drive only with engaged seats and backrests.

Depending on version the levers of the seats can be located at different places.

Seat Backrest

Folding backrest down to table position

1. Push the head restraint down or remove it before folding the backrest
2. If available fold up the armrest

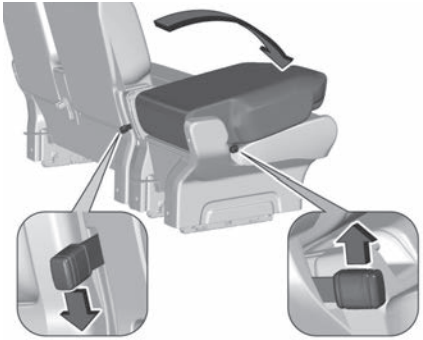

3. Pull the front lever or push the rear lever to release the backrest
4. Fold the backrest fully down

Unfolding the backrest

1. Pull the front lever or press the rear lever.
2. Raise the backrest fully upwards until it engages.

Fixed rear seats

Tilted position

1. Fold the backrest down to the table position.

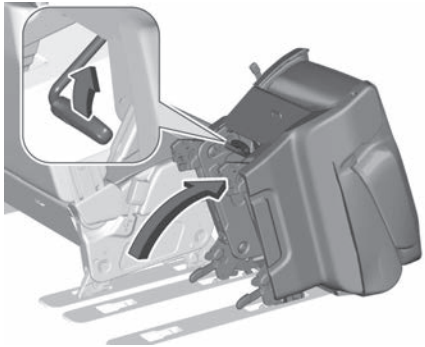

2. Pull the release lever and tilt the seat to the front.

Removing

1. Fold the backrest down to the table position;
2. Move the seat to the tilted position.

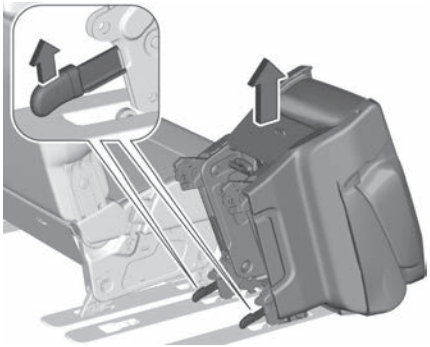

3. Release each front mount by pulling the respective lever;
4. Remove the seat.

Installing

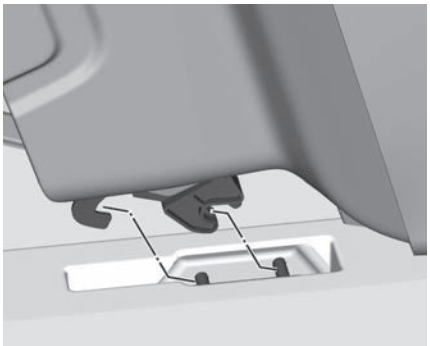

1. Engage front mounts in the anchorages;

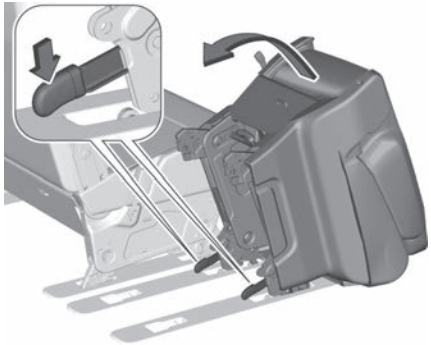

2. Push the levers to lock the front mounts and tilt the seat back until it is engaged;
3. Unfold the backrest.

Vis-à-Vis seats

Longitudinal adjustment

The single seats as well as the seat bench can be moved individually forwards and backwards.

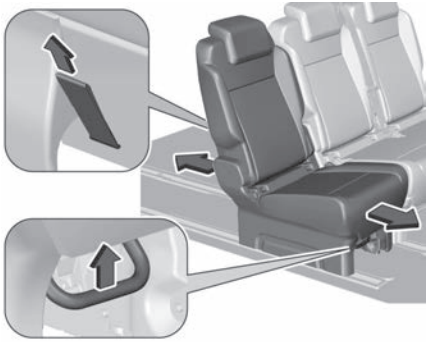

To release the seat, pull the front handle upward or pull the loop on the rear without going beyond the point of resistance.
Slide the seat forwards or backwards.

Backrest inclination

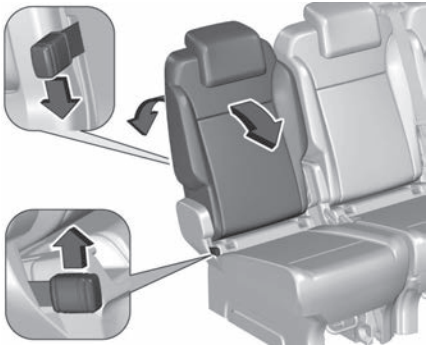

Pull the front lever or push the rear lever to release and adjust the backrest. Release the lever when the desired position is obtained.

Removing

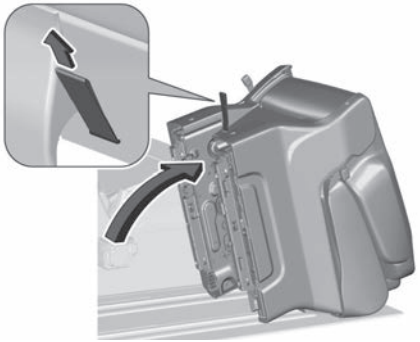

1. Pull the loop on the rear beyond the point of resistance and tilt the seat to the front;
2. Remove the seat.

⚠ CAUTION
Do not use the loop to lift the seat.

Installing

1. The loop on the rear has to be in the release position;

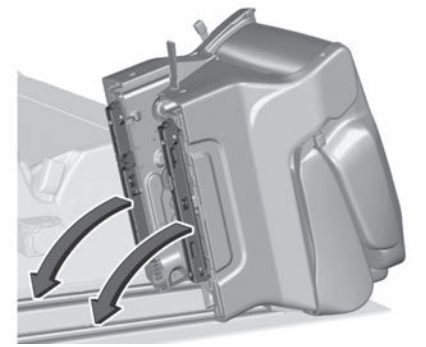

2. Place the front of the seat on the rails and then tip the rear down;
3. Slide the seat until it engages.

⚠ CAUTION

Avoid contact between two seats. This could cause significant wear of the parts in contact.
Move and lock the rearward facing seats of the second row as close as possible to the front row seat, depending on the position of the front row seats. The distance between the rearward facing seats of the second row and the forward facing third row seats should be as big as possible.

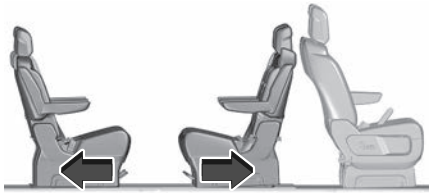

Seat Belts

Seat Belts Introduction

The seat belts are locked during heavy acceleration or deceleration of the vehicle, holding the occupants in the seat position. Therefore the risk of injury is considerably reduced.
The retractor may lock when the car is parked on a steep slope: this is perfectly normal. Furthermore, the reel mechanism locks the belt if it is pulled sharply or in the event of sudden braking, collisions and high-speed bends.

⚠ DANGER

Never place a seat belt around a child seated on an occupant's lap. In the event of sudden braking or a collision, the child may suffer serious or fatal injuries.

⚠ WARNING

Fasten seat belt before each trip.
In the event of an accident, people not wearing seat belts endanger their fellow occupants and themselves.

Seat belts are designed to be used by only one adult person at a time.
Periodically check all parts of the belt system for damage, soiling and proper functionality.

Have damaged components replaced. After an accident, have the belts and triggered belt pretensioners replaced by a workshop.

NOTE

Make sure that the belts are not damaged by shoes or sharp-edged objects or trapped. Prevent dirt from getting into the belt retractors.

NOTE

Use the belt buckle intended for the respective seat belt when fastening in order to ensure proper functionality.

Seat belt reminder

Not removable seats are equipped with a seat belt reminder, indicated by a control indicator in the instrument cluster and in the overhead console.

Belt force limiters

Stress on the body is reduced by the gradual release of the belt during a collision.

Three Points Seat Belt

Fasten

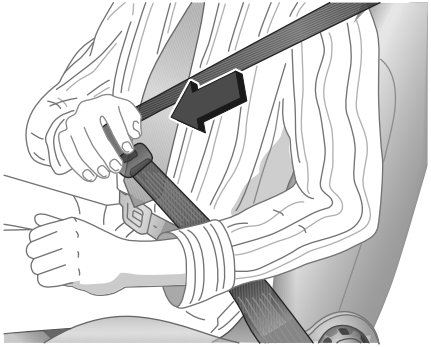

Withdraw the seat belt from the retractor, guide it untwisted across the body. With the other hand, pull the seat belt down and forward so that the latch plate is able to slide without resistance. Insert the latch plate into the buckle. Make sure the seat belt lies across the shoulder and fits tightly to the body while driving.

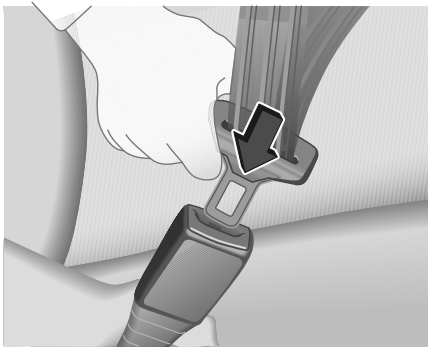

Loose or bulky clothing prevents the seat belt from fitting snugly. Do not place objects such as handbags or mobile phones between the seat belt and your body.

WARNING

The seat belt must not rest against hard or fragile objects in the pockets of your clothing.

Height adjustment

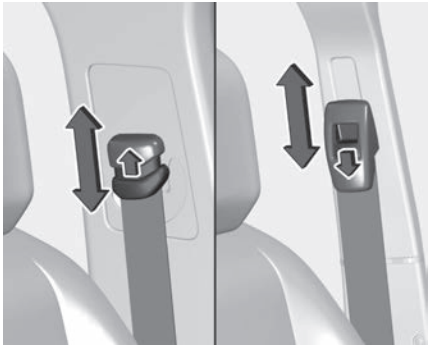

Press the release button and shift the height adjuster upwards or downwards till it engages at the desired position.

Adjust the height so that the seat belt lies across the shoulder. It must not lie across the throat or upper arm.
Do not adjust while driving.

Seat belts on the rear seats and bench seat

The retractor can be located on the backrest of the seat.

Unfasten

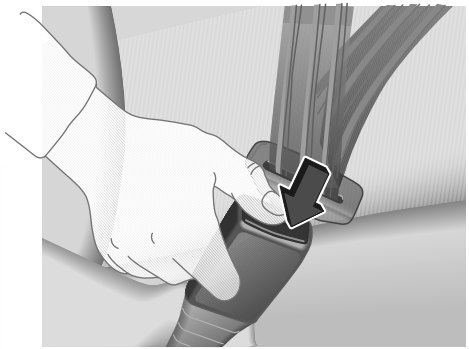

To release seat belt, press red button on belt buckle.

Using seat belts while pregnant

⚠ WARNING

The lap belt must be positioned as low as possible across the pelvis to prevent pressure on the abdomen.

Seat Belt Pretensioner

In the event of a head-on, rear-end or side-on collision of a certain severity, the single front seat belts and the seat belt of the outer front bench seat are tightened by seat belt pretensioners.

⚠ WARNING

Incorrect handling (e.g. removal or fitting of belts) can trigger the belt pretensioners.

Deployment of the belt pretensioners is indicated by continuous illumination of control indicator .
Triggered belt pretensioners must be replaced by a workshop. Belt pretensioners can only be triggered once.

ⓘ NOTE

Do not affix or install accessories or other objects that may interfere with the operation of the belt pretensioners. Do not make any modifications to belt pretensioner components as this will invalidate the operating permit of your vehicle.

Airbag System

Airbag System Introduction

The airbag system consists of a number of individual systems depending on the scope of equipment.
When triggered the airbags inflate within milliseconds. They also deflate so quickly that it is often unnoticeable during the collision.

⚠ WARNING

The airbag system deploys in an explosive manner, repairs must be performed by skilled personnel only.

⚠ WARNING

Adding accessories that change the vehicle frame, bumper system, height, front end or side sheet metal, may keep the airbag system from working properly. The operation of the airbag system can also be affected by changing any parts of the front seats, seat belts, airbag sensing and diagnostic module, steering wheel, instrument panel, inner door seals including the speakers, any of the airbag modules, ceiling or pillar trim, front sensors, side impact sensors or airbag wiring.

⚠ WARNING

Keep the area in which the airbag inflates clear of obstructions.

⚠ WARNING

Do not place anything between the occupants and the airbags (e.g. child, animal, object), do not affix or attach anything near to or in the exit path of the airbags, as this could cause injuries when they are deployed.
Do not affix or attach anything to:

- The steering wheel and dashboard.
- The seat backrests (e.g. clothing).
- The roof.

This system is designed to improve the safety of the occupants of the front seats and the rear outer seats in the event of a violent collision. The airbags supplement the action of the seat belts equipped with a force limiting system. Electronic detectors record and analyze the front and side impacts sustained in the impact detection zones:

- In the event of violent impact, the airbags deploy instantly and help better protect the occupants of the vehicle; immediately after the impact, the airbags deflate rapidly in order not to hinder the visibility or the possible exit of the occupants.
- In the event of a slight impact, a rear impact and under certain rollover conditions, the airbags may not deploy; only the seat belt helps to protect you in these situations.

The seriousness of the impact depends on the nature of the obstacle and the speed of the vehicle at the moment of collision.

NOTE

The airbag systems and belt pretensioner control electronics are located in the centre console area.
Do not put any magnetic objects in this area.
Do not affix any objects onto the airbag covers and do not cover them with other materials. Have damaged covers replaced by a workshop.
Each airbag is triggered only once. Have deployed airbags replaced by a workshop. Furthermore, it may be necessary to have the steering wheel, the instrument panel, parts of the panelling, the door seals, handles and the seats replaced.
Do not make any modifications to the airbag system as this will invalidate the vehicle operating permit.

WARNING

The airbags do not operate when the ignition is switched off.

This equipment will only deploy once. If a second impact occurs (during the same or a subsequent accident), the airbag will not be deployed again.

Front Airbags

The front airbag system consists of one airbag in the steering wheel and one in the instrument panel on the front passenger side. These can be identified by the word AIRBAG.
The front airbag system is triggered in the event of a front-end impact of a certain severity. The ignition must be switched on.

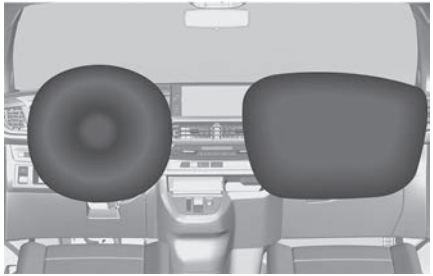

The inflated airbags cushion the impact, thereby reducing the risk of injury to the upper body and head of the front seat occupants considerably.

⚠ WARNING

Optimum protection is only provided when the seat is in the proper position.
Keep the area in which the airbag inflates clear of obstructions.
Fit the seat belt correctly and engage securely. Only then is the airbag able to protect.

Lateral Airbags

The side airbag system consists of an airbag in each front seat backrest. This can be identified by the word AIRBAG.
The side airbag system is triggered in the event of a side impact of a certain severity. The ignition must be switched on.

The inflated airbags cushion the impact, thereby reducing the risk of injury to the upper body in the event of a side-on collision considerably.

⚠ WARNING

Keep the area in which the airbag inflates clear of obstructions.

ⓘ NOTE

Only use protective seat covers that have been approved for the vehicle. Be careful not to cover the airbags.

Curtain Airbags

The curtain airbag system consists of an airbag in the roof frame on each side.
The curtain airbag system is triggered in the event of a side-on impact of a certain severity. The ignition must be switched on.

The inflated airbags cushion the impact, thereby reducing the risk of injury to the head in the event of a side-on impact considerably.

⚠ WARNING

Keep the area in which the airbag inflates clear of obstructions.
The hooks on the handles in the roof frame are only suitable for hanging up light articles of clothing, with-

out coat hangers. Do not keep any items in these clothes.

Airbag System Malfunction

In the event of a malfunction, this warning light lights up on the instrument panel. Contact a dealer or a qualified workshop to have the system checked. The airbags may not be deployed in the event of a serious impact.

⚠ WARNING

In the event of a minor impact or bump at the side of the vehicle or if the vehicle rolls over, the airbags may not be deployed.
In the event of a rear or front collision, none of the lateral airbags are deployed.

Front Passenger Airbag Deactivation

The front passenger airbag must be set in accordance with the type of Child Restraint System used. Follow the Child Restraints Installation Table.
⇨ 55

The side airbag and curtain airbag systems, the belt pretensioners and all driver airbag systems will remain active. The front passenger airbag system can be deactivated via a key-operated switch in the glove box on the passenger side.

⚠ WARNING

Deactivate the passenger airbag only in combination with the use of a child restraint system, subject to the instructions and restrictions in the Child Restraints Installation Table. Otherwise, there is a risk of fatal injury for a person occupying a seat with a deactivated front passenger airbag.

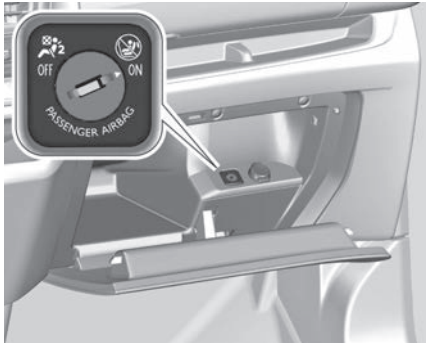

For right-hand drive versions, the switch is located in the storage compartment on the passenger side.

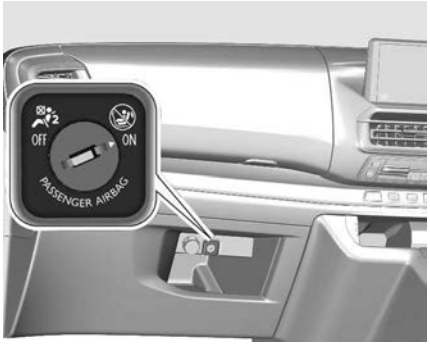

Use the ignition key to choose the position:

OFF
Front passenger airbag is deactivated and will not inflate in the event of a collision. Control indicator illuminates continuously in the center console

ON
Front passenger airbag is active

Activate/Deactivate the airbag only when the vehicle is stopped with the ignition off.

After the ignition is turned on:

- If the control indicator ON illuminates for approx. 60 seconds, the front passenger airbag system will inflate in the event of a collision.
- If the control indicator OFF illuminates, the front passenger airbag system is deactivated. It stays on while the airbag is deactivated.

Consult a workshop immediately :

- If neither of the two control indicators are illuminated.
- If both control indicators are illuminated at the same time, there is a system failure. The status of the system cannot be determined. No person is allowed to occupy the front passenger seat.

Warning label - Front passenger airbag

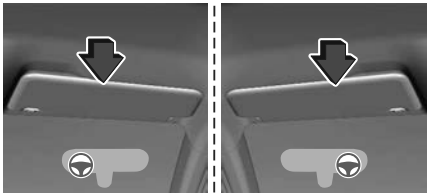

You must comply with the following instruction, as reminded by the warning label on both sides of the passenger sun visor:

⚠ DANGER

NEVER use a rearward-facing child restraint on a seat protected by an ACTIVE AIRBAG in front of it; DEATH or SERIOUS INJURY to the CHILD can occur.

EN: NEVER use a rearward-facing child restraint on a seat protected by an ACTIVE AIRBAG in front of it, DEATH or SERIOUS INJURY to the CHILD can occur.

DE: Montieren Sie auf einem Sitz mit AKTIVIERTEM Front-Airbag NIEMALS einen Kindersitz oder eine Babyschale entgegen der Fahrtrichtung, das Kind Könnte schwere oder sogar tödliche Verletzungen erleiden.

FR: NE JAMAIS installer de système de retenue pour enfants faisant face vers l'arrière sur un siège protégé par un COUSSIN GONFLABLE frontal ACTIVÉ. Cela peut provoquer la MORT de l'ENFANT ou le BLESSER GRAVEMENT.

ES: NO INSTALAR NUNCA un sistema de retención para niños de espaldas al sentido de la marcha en un asiento protegido mediante un AIRBAG frontal ACTIVADO, ya que podría causar lesiones GRAVES o incluso la MUERTE del niño.

IT: NON installare MAI seggiolini per bambini posizionati in senso contrario a quello di marcia su un sedile protetto da un AIRBAG frontale ATTIVATO. Ciò potrebbe provocare la MORTE o FERITE GRAVI al bambino.

Child Restraints

General recommendations

⚠ WARNING

When carrying children in the vehicle, you must install them in a suitable seat. Never carry a child on your lap.

⚠ WARNING

An incorrectly installed child seat in a vehicle compromises the child's safety in the event of an accident. Make sure to comply with the instructions hereinafter and the ones provided with the child seat.

ⓘ NOTE

The regulations on carrying children are specific to each country. Refer to the legislation in force in your country.

For maximum safety, please observe the following recommendations:

- In accordance with European regulations, all children under the age of 12 years old or less than 1.5 meters tall must travel in approved child seats suited to their size or weight, on seats fitted with a seat belt or ISO-FIX mountings.
- Children aged 15 months or less must travel in the "rearward facing" position, whether in the front or rear of the vehicle. The use of "rearward facing" seats is recommended for children until the age of 3.
- Statistically, the safest seats in your vehicle for carrying children are the rear seats.

⚠ WARNING

Do not affix anything on the child restraint systems and do not cover them with any other materials.
A child restraint system which has been subjected to stress in an accident must be replaced.

ⓘ NOTE

Seatbelts

Ensure that there is no seat belt or seat belt buckle under the child seat, as this could destabilize it.
When installing a child seat on a rear seat, ensure that the seat does not interfere with the operation of the seatbelt on the rear center seat.
Ensure that the seatbelt is properly positioned and tighten it or the child seat harness keeping the slack relative to the child's body to a minimum, even for short journeys.

⚠ WARNING

Headrests

Remove the head restraint before installing a child seat with a backrest or a Top Tether system on a passenger seat.
Ensure that the head restraint is stored or attached securely to prevent it from being thrown around the vehicle in the event of sharp braking. Refit the head restraint once the child seat has been removed.

⚠ WARNING

Additional protections.

To prevent accidental opening of the doors and rear windows, use the "Child lock".
Take care not to open the rear windows by more than one third.
To protect young children from the sun's rays, fit side blinds on the rear windows.
As a safety measure, do not leave:

- A child alone and unsupervised inside a vehicle.
- A child or an animal in a vehicle which is exposed to the sun, with the windows closed.
- The keys within reach of children inside the vehicle.

Child Restraint Installation on a Front Seat

⚠ WARNING

The front passenger airbag must be deactivated before installing a rearward-facing child seat. Otherwise, the child risks being seriously in-

jured or killed if the airbag is deployed.

⚠ WARNING

The front passenger airbag must be activated when installing a forward-facing child seat.

ⓘ NOTE

Adjust the front passenger seat to the highest and fully back longitudinal position, with the backrest straightened.

Child Restraint Installation on a Rear Seat

Forward-facing or rearward-facing

1. Move the vehicle's front seat forward and straighten the backrest so that the legs of the child in the forward-facing or rearward-facing child seat itself do not touch the vehicle's front seat.
2. Check that the backrest of the forward-facing child seat is as close as possible to the backrest of the vehicle's rear seat, and ideally in contact with it.

Center rear seat
A child seat with a support leg must never be installed on the center rear passenger seat.

Seat-specific Recommendations

⚠ WARNING

Installing a booster seat

The chest part of the seat belt must be positioned on the child's shoulder without touching the neck.
Ensure that the lap part of the seat belt passes correctly over the child's thighs.
Use a booster seat with a backrest, equipped with a belt guide at shoulder level.

⚠ WARNING

Installing a Child Seat with support leg

Ensure that the Support Leg is in firm and steady contact with the floor.

Never install a seat with support leg on the center rear passenger seat.

⚠ WARNING

When the child restraint system is not used, secure it with the seat belt or with the ISOFIX anchorages, or remove it from the vehicle. Do not leave it unsecured inside the passenger compartment. In this way, in the event of sudden braking or an accident, it will not cause injuries to the occupants.

⚠ WARNING

The head restraint must always be present in the vehicle and fitted if the seat is used by an adult passenger or a child sitting in a restraint system without backrest.

⚠ WARNING

After installing a child restraint system in the vehicle, do not move the seat forwards or back as it could loosen the attachments. Remove the child restraint system to adjust the seat position. Install the child restraint system again once the seat has been adjusted.

Seat Belt Installation

Child restraint systems can be fastened by using a seat belt.
When installing a child seat using the seat belt, ensure that the seat belt is positioned and tightened correctly on the child seat and that it secures the child seat firmly on the vehicle seat.

ISOFIX Anchorage Connectors

Specific vehicle ISOFIX child restraint system positions are marked in the Child Restraints Installation Table.
The rear outer seats feature ISOFIX compliant anchorage points.

The anchorage point are located behind zips between the vehicle seat backrest and cushion. They are indicated by the label on the backrest.
Open the zipper to get access to the mountings.

ⓘ NOTE

When fastening ISOFIX compatible child restraint systems on adjustable passenger seats, first incline the backrest as far as necessary backwards in order to get access to the ISOFIX anchorage connectors.
After the proper fastening of the ISOFIX child restraint system, incline the backrest forward again.

Top-tether anchors

In addition to the ISOFIX rings, Top-tether seats must be secured to an additional ring, located behind the seat.

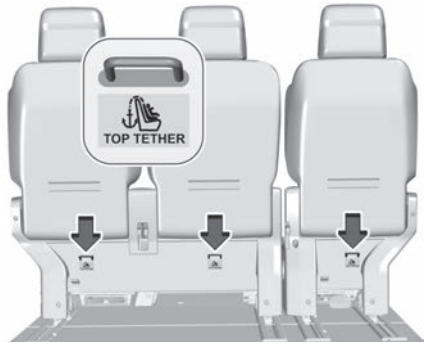

Before installing a Top-Tether seat:

1. Remove and stow the head restraint for the seat before installing the child seat;
2. Install the child seat on ISOFIX mountings;
3. Pass the strap of the Child Seat over the back rest and secure it to the Top-Tether rings;
4. Tighten the strap according to the instructions of the manual provided with the Child Seat.

ISOFIX child restraint systems of universal category positions are marked in the Child Restraints Installation Table.

i-Size Child Seats

An i-Size child restraint system is an universal ISOFIX child restraint system according to UN Regulation No. 129. All i-Size child restraint systems can be used on any vehicle seat suitable for i-Size, as indicated in the Child Restraints Installation Table.

NOTE

Either a Top-tether strap or a support leg must be used in addition to the ISOFIX brackets to prevent the seat from tipping forwards in the event of a collision.

i-Size child seats and vehicle seats with i-Size approval are marked with i-Size symbol.

Child Seats Recommended

Size of the child (ECE R129)	Installation type	Child restraint system	Remark
Size: 40 - 85 cm (From birth to 15 months) (Up to 13 kg)	Rearward facing 	"RÖMER Baby-Safe PRO"	Recommended with its ISOFIX base (RÖMER Vario Base 5Z)
Size: 61- 105 cm (From 3 months to 4 years) (Up to 18 kg)	Rearward facing Size: 61 - 105 cm Forward facing Size: 76 - 105 cm 	"RÖMER Dualfix 5Z"	Installed with its ISOFIX base (RÖMER Vario Base 5Z) Rearward facing installation is recommended
Size: 100 - 150 cm (From 3.5 to 12 years) (Up to 36 kg)	Forward facing 	"RÖMER KidFix Pro"	Can be installed with or without ISOFIX mountings. The child is restrained by the seat belt. Bought in Stellantis & You, Sales and Services We recommend using child seat with the backrest. If the backrest is removed for child over 138 cm, the secure guard must also be removed

⚠ DANGER

If a Universal ISOFIX child restraint system is not fixed to all three anchorages, it will not be able to protect the child correctly. In a crash, the child could be seriously or fatally injured.

ⓘ NOTE

Please follow the child restraint manufacturers' instructions for installing the appropriate child restraint in the vehicle.

ⓘ NOTE

For the semi-universal or vehicle-specific child restraint (ISOFIX or belt-type child restraint), refer to the list of vehicles provided in the child restraint user manual.

ⓘ NOTE

Ensure that the installation location of the child restraint system inside the vehicle is correct.

Refer to the summary table for the installation of child seats.

Child Restraint Installation Locations

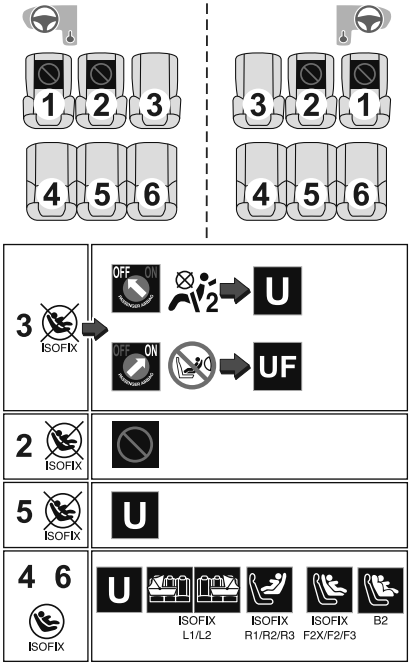

* Depending on versions, see table locations for child seats.

⚠ WARNING

Observe the restrictions and indications in the European Regulation Child Restraints Installation Table.

Key

Seat position where the installation of a child seat is forbidden.

Front passenger airbag deactivated and associated warning light.

Front passenger airbag activated and associated warning light.

Seat position suitable for the installation of a child seat secured using the seat belt and universally approved "rearward facing" and/or "forward facing" (U) for groups 0, 0+, 1, 2 or 3, or dedicated to children between 40 and 150 cm in size.

Seat position suitable for the installation of a child seat secured using the seat belt and universally approved "forward facing" (UF) for groups 1, 2 or 3, or dedicated to children between 76 and 150 cm in size only.

"Rearward facing" ISOFIX child seat:

- R1: ISOFIX child seat for a baby.
- R2: ISOFIX reduced size child seat.
- R3: ISOFIX large size child seat.

"Forward facing" ISOFIX child seat:

- F2X: ISOFIX child seat for toddlers.
- F2: ISOFIX reduced height child seat.
- F3: ISOFIX full height child seat.

Booster child seat, using seat belt or ISOFIX mountings:

- B2: reduced width booster seat.

ISOFIX "carrycot" type child seat:

- L1: left-hand facing.
- L2: right-hand facing.

Seat position authorised for the installation of an ISOFIX child seat.

Seat position where the installation of an ISOFIX child seat is forbidden.

For seat adjustments, refer to the summary table "Installing universal, ISOFIX and i-Size child seats".

In accordance with European regulations, this table indicates the options for installing child seats secured using the seat belt and universally approved (a) as well as the largest ISOFIX and i-Size child seats on seat positions equipped with ISOFIX mountings in the vehicle.

	Seat numbers							
	Front seats (b)					Rear seats (b) row 2		
	1	2 (g)		3		4	5	6
Front passenger airbag		Deactivated "OFF" (c)	Activated "ON" (d)	Deactivated "OFF" (c)	Activated "ON" (d)			
Position compatible with an universal (a) child seat Rearward facing	no	no		yes (e)	no	yes (h)		
Position compatible with an universal (a) child seat Forward facing	no	no		yes (f)		yes (h)		
Position compatible with an i-Size child seat Rearward / Forward facing	no	no		no		no		
Position equipped with a Top Tether hook	no	no		no		no		

	Seat numbers							
	Front seats (b)					Rear seats (b) row 2		
	1	2 (g)		3		4	5	6
Front passenger airbag		Deactivated "OFF" (c)	Activated "ON" (d)	Deactivated "OFF" (c)	Activated "ON" (d)			
"Carrycot" type of child seat (L1 / L2)	no	no		no		yes/no (g)	no	yes/no (g)
"Rearward facing" ISO-FIX child seat (R1 / R2 / R3)	no	no		no		R3 (i)/no (g)	no	R3 (i)/no (g)
"Forward facing" ISO-FIX child seat (F2 / F2X / F3)	no	no		no		F3	no	F3
"Booster" child seat (B2 / B3)	no	no		no		B2 (g)	no	B2 (g)

Rules

- A position that is i-Size compatible is also compatible for R1, R2 and F2X, F2, B2.
- A position that is R3 compatible is also compatible for R1 and R2.
- A position that is R2 compatible is also compatible for R1.
- A position that is F3 compatible is also compatible for F2X and F2.
- A position that is B3 compatible is also compatible for B2.

(a) Universal child seat: child seat that can be installed in all vehicles using the seat belt.

(b) Depending on version, refer to the legislation in force in your country before installing a child in this seat position.

(c) To install a "rearward facing" child seat at this seat position, the front passenger airbag MUST be deactivated "OFF".

(d) Only a "forward facing" child seat is authorised at this seat position with the front passenger airbag activated "ON".

(e) For a "rearward facing" and/or a "forward facing" universal child seat (U) in groups 0, 0+, 1, 2 or 3, or dedicated to children between 40 and 150 cm in size only.

(f) For a "forward facing" universal child seat (UF) in groups 1, 2 or 3, or dedicated to children between 76 and 150 cm in size only.

(g) With fixed row 1 bench seat only.

(h) To install a "rearward facing" or "forward facing" child seat on a rear seat, move the seats in front of it forward, then straighten their backrests to allow sufficient room for the child seat and the child's legs.

(i) The front seat must be adjusted so that there is no contact between the child in row 2 and the seat immediately in front (with the front seat adjusted to 2 notches ahead of the centre of the slide)..

COMBI Version

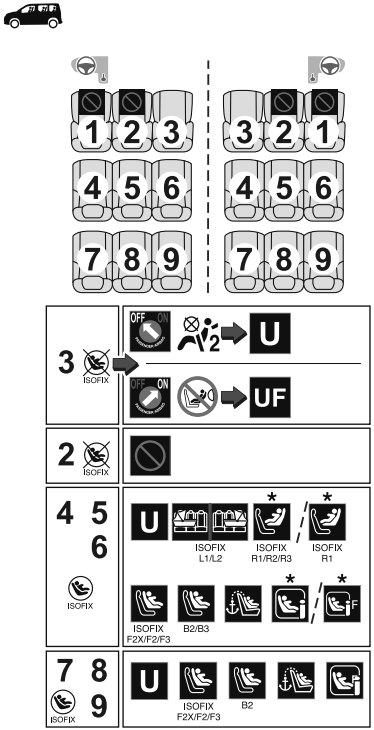

* Depending on versions, see table locations for child seats.

Key

Seat position where the installation of a child seat is forbidden.

Front passenger airbag deactivated and associated warning light.

Front passenger airbag activated and associated warning light.

Seat position suitable for the installation of a child seat secured using the seat belt and universally approved "rearward facing" and/or "forward facing" (U) for groups 0, 0+, 1, 2 or 3, or dedicated to children between 40 and 150 cm in size.

Seat position suitable for the installation of a child seat secured using the seat belt and universally approved "forward facing" (UF) for groups 1, 2 or 3, or dedicated to children between 76 and 150 cm in size only.

Seat position authorised for the installation of an i-Size child seat.

Seat position authorised for the installation of a "forward facing" i-Size child seat.

Presence of a Top Tether anchorage point at the rear of the backrest, authorising the installation of an universal ISOFIX child seat.

"Rearward facing" ISOFIX child seat:

- R1: ISOFIX child seat for a baby.
- R2: ISOFIX reduced size child seat.
- R3: ISOFIX large size child seat.

"Forward facing" ISOFIX child seat:

- F2X: ISOFIX child seat for toddlers.
- F2: ISOFIX reduced height child seat.
- F3: ISOFIX full height child seat.

Booster child seat, using seat belt or ISOFIX mountings:

- B2: reduced width booster seat.
- B3: full width booster seat.

ISOFIX "carrycot" type child seat:

- L1: left-hand facing.
- L2: right-hand facing.

Seat position authorised for the installation of an ISOFIX child seat.

Seat position where the installation of an ISOFIX child seat is forbidden.

For seat adjustments, refer to the summary table Installing universal, ISOFIX and i-Size child seats.

In accordance with European regulations, this table indicates the options for installing child seats secured using the seat belt and universally approved (a) as well as the largest ISOFIX and i-Size child seats on seat positions equipped with ISOFIX mountings in the vehicle.

	Seat numbers										
	Front seats (b)					Rear seats (b) row 2			Rear seats (b) row 3		
	1	2 (g)		3		4	5	6	7	8	9
Front passenger airbag		Deactivated "OFF" (c)	Activated "ON" (d)	Deactivated "OFF" (c)	Activated "ON" (d)						
Position compatible with an universal (a) child seat Rearward facing	no	no		yes (e)	no	yes			yes		
Position compatible with an universal (a) child seat Forward facing	no	no		yes (f)		yes			yes		
Position compatible with an i-Size child seat Rearward facing	no	no		no		yes (k)/no (l)	yes (j) (k)/no (l)	yes (k)/no (j)	yes (n)	yes (j) (n)	yes (n)

	Seat numbers									
	Front seats (b)					Rear seats (b) row 2			Rear seats (b) row 3		
	1	2 (g)		3		4	5	6	7	8	9
Front passenger airbag		Deactivated "OFF" (c)	Activated "ON" (d)	Deactivated "OFF" (c)	Activated "ON" (d)						
Position compatible with an i-Size child seat Forward facing	no	no		no		yes	yes (j)	yes	yes (n)	yes (j) (n)	yes (n)
Position equipped with a Top Tether hook	no	no		no		yes			yes		
"Carrycot" type of child seat (L1 / L2)	no	no		no		yes (h) (i) (l)	yes (h) (i) (j) (l)	yes (h) (i) (l)	no		
"Rearward facing" ISOFIX child seat (R1 / R2 / R3)	no	no		no		R3 (k) (l)/R1 (m)	R3 (j) (k) (l)/ R1 (j) (m)	R3 (k) (l)/R1 (m)	no		
"Forward facing" ISOFIX child seat (F2 / F2X / F3)	no	no		no		F3	F3 (j)	F3	F3	F3 (j)	F3

	Seat numbers									
	Front seats (b)					Rear seats (b) row 2			Rear seats (b) row 3		
	1	2 (g)		3		4	5	6	7	8	9
Front passenger airbag		Deactivated "OFF" (c)	Activated "ON" (d)	Deactivated "OFF" (c)	Activated "ON" (d)						
"Booster" child seat (B2 / B3)	no	no		no		B3	B3 (j)	B3	B2	B2 (j)	B2

Rules

- A position that is i-Size compatible is also compatible for R1, R2 and F2X, F2, B2.
- A position that is R3 compatible is also compatible for R1 and R2.
- A position that is R2 compatible is also compatible for R1.
- A position that is F3 compatible is also compatible for F2X and F2.
- A position that is B3 compatible is also compatible for B2.

(a) Universal child seat: child seat that can be installed in all vehicles using the seat belt.

(b) Depending on version, refer to the legislation in force in your country before installing a child in this seat position.

(c) To install a "rearward facing" child seat at this seat position, the front passenger airbag MUST be deactivated "OFF".

(d) Only a "forward facing" child seat is authorised at this seat position with the front passenger airbag activated "ON".

(e) For a "rearward facing" and/or a "forward facing" universal child seat (U) in groups 0, 0+, 1, 2 or 3, or dedicated to children between 40 and 150 cm in size only.

(f) For a "forward facing" universal child seat (UF) in groups 1, 2 or 3, or dedicated to children between 76 and 150 cm in size only.

(g) Bench seat version.

(h) Installing a carrycot on this seat may prevent the use of one or more of the other seats in this row.

(i) Installation possible only behind the row 1 individual passenger seat.

(j) The seat can be installed centrally in the vehicle; it then prevents the use of the outer seats.

(k) Only with row 1 individual seats.

(l) No compatible if version with row 1 bench seat.

(m) With row 1 bench seat.

(n) The seat in row 2 cannot be used when an i-Size child seat is installed immediately behind.

Business, Active Version

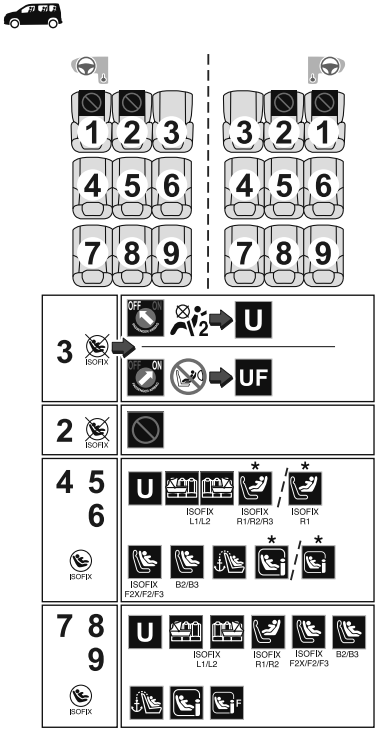

* Depending on versions, see table locations for child seats.

Key

Seat position where the installation of a child seat is forbidden.

Front passenger airbag deactivated and associated warning light.

Front passenger airbag activated and associated warning light.

Seat position suitable for the installation of a child seat secured using the seat belt and universally approved "rearward facing" and/or "forward facing" (U) for groups 0, 0+, 1, 2 or 3, or dedicated to children between 40 and 150 cm in size.

Seat position suitable for the installation of a child seat secured using the seat belt and universally approved "forward facing" (UF) for groups 1, 2 or 3, or dedicated to children between 76 and 150 cm in size only.

Seat position authorised for the installation of an i-Size child seat.

Seat position authorised for the installation of a "forward facing" i-Size child seat.

Presence of a Top Tether anchorage point at the rear of the backrest, authorising the installation of an universal ISOFIX child seat.

"Rearward facing" ISOFIX child seat:

- R1: ISOFIX child seat for a baby.
- R2: ISOFIX reduced size child seat.
- R3: ISOFIX large size child seat.

"Forward facing" ISOFIX child seat:

- F2X: ISOFIX child seat for toddlers.
- F2: ISOFIX reduced height child seat.
- F3: ISOFIX full height child seat.

Booster child seat, using seat belt or ISOFIX mountings:

- B2: reduced width booster seat.
- B3: full width booster seat.

ISOFIX "carrycot" type child seat:

- L1: left-hand facing.
- L2: right-hand facing.

Seat position authorised for the installation of an ISOFIX child seat.

Seat position where the installation of an ISOFIX child seat is forbidden.

For seat adjustments, refer to the summary table "Installing universal, ISOFIX and i-Size child seats".

In accordance with European regulations, this table indicates the options for installing child seats secured using the seat belt and universally approved (a) as well as the largest ISOFIX and i-Size child seats on seat positions equipped with ISOFIX mountings in the vehicle.

	Seat numbers										
	Front seats (b)					Rear seats (b) row 2			Rear seats (b) row 3		
	1	2 (g)		3		4	5	6	7	8	9
Front passenger airbag		Deactivated "OFF" (c)	Activated "ON" (d)	Deactivated "OFF" (c)	Activated "ON" (d)						
Position compatible with an universal (a) child seat Rearward facing	no	no		yes (e)	no	yes			yes		
Position compatible with an universal (a) child seat Forward facing	no	no		yes (f)		yes			yes		
Position compatible with an i-Size child seat Rearward facing	no	no		no		yes (k)/no (l)	yes (j) (k)/no (l)	yes (k)/no (l)	yes (q)	yes (j) (n)	yes (q)

	Seat numbers									
	Front seats (b)					Rear seats (b) row 2			Rear seats (b) row 3		
	1	2 (g)		3		4	5	6	7	8	9
Front passenger airbag		Deactivated "OFF" (c)	Activated "ON" (d)	Deactivated "OFF" (c)	Activated "ON" (d)						
Position compatible with an i-Size child seat Forward facing	no	no		no		yes	yes (j)	yes	yes (q)	yes (j) (q)	yes (q)
Position equipped with a Top Tether hook	no	no		no		yes			yes		
"Carrycot" type of child seat (L1 / L2)	no	no		no		yes (h) (i) (l)	yes (h) (i) (j) (k)	yes (h) (i) (l)	yes (h) (o) (p)/ no (n)	yes (h) (j) (o) (p)/no (n)	yes (h) (o) (p)/ no (n)
"Rearward facing" ISOFIX child seat (R1 / R2 / R3)	no	no		no		R3 (k) (l)/R1 (m)	R3 (j) (k) (l)/ R1 (j) (m)	R3 (k) (l)/R1 (m)	R2 (o) (p)/no (n)		
"Forward facing" ISOFIX child seat (F2 / F2X / F3)	no	no		no		F3	F3 (j)	F3	F3	F3 (j)	F3

	Seat numbers									
	Front seats (b)					Rear seats (b) row 2			Rear seats (b) row 3		
	1	2 (g)		3		4	5	6	7	8	9
Front passenger airbag		Deactivated "OFF" (c)	Activated "ON" (d)	Deactivated "OFF" (c)	Activated "ON" (d)						
"Booster" child seat (B2 / B3)	no	no		no		B3	B3 (j)	B3	B2	B2 (j)	B2

Rules

- A position that is i-Size compatible is also compatible for R1, R2 and F2X, F2, B2.
- A position that is R3 compatible is also compatible for R1 and R2.
- A position that is R2 compatible is also compatible for R1.
- A position that is F3 compatible is also compatible for F2X and F2.
- A position that is B3 compatible is also compatible for B2.

(a) Universal child seat: child seat that can be installed in all vehicles using the seat belt.

(b) Depending on version, refer to the legislation in force in your country before installing a child in this seat position.

(c) To install a "rearward facing" child seat at this seat position, the front passenger airbag MUST be deactivated "OFF".

(d) Only a "forward facing" child seat is authorised at this seat position with the front passenger airbag activated "ON".

(e) For a "rearward facing" and/or a "forward facing" universal child seat (U) in groups 0, 0+, 1, 2 or 3, or dedicated to children between 40 and 150 cm in size only.

(f) For a "forward facing" universal child seat (UF) in groups 1, 2 or 3, or dedicated to children between 76 and 150 cm in size only.

(g) Bench seat version.

(h) Installing a carrycot on this seat may prevent the use of one or more of the other seats in this row.

(i) Installation possible only behind the row 1 individual passenger seat.

(j) The seat can be installed centrally in the vehicle; it then prevents the use of the outer seats.

(k) Only with row 1 individual seats.

(l) No compatible if version with row 1 bench seat.

(m) With row 1 bench seat.

(n) Not compatible with fixed one-piece bench seat row 3 or Seat and fixed rear bench seat row 3.

(o) Compatible only for 3 individual seats in row 3.

(p) The seat in row 2 must be adjusted so that there is no contact between the child in row 3 and the seat immediately in front.

(q) The seat in row 2 cannot be used when an i-Size child seat is installed immediately behind.

Allure, Business VIP

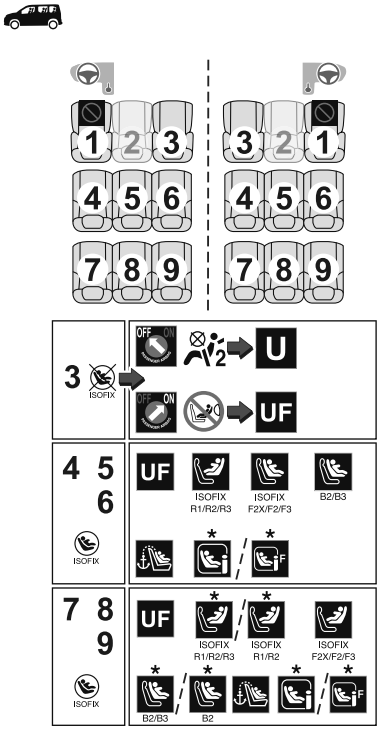

* Depending on versions, see table locations for child seats.

Key

Seat position where the installation of a child seat is forbidden.

Front passenger airbag deactivated and associated warning light.

Front passenger airbag activated and associated warning light.

Seat position suitable for the installation of a child seat secured using the seat belt and universally approved "rearward facing" and/or "forward facing" (U) for groups 0, 0+, 1, 2 or 3, or dedicated to children between 40 and 150 cm in size.

Seat position suitable for the installation of a child seat secured using the seat belt and universally approved "forward facing" (UF) for groups 1, 2 or 3, or dedicated to children between 76 and 150 cm in size only.

Seat position authorised for the installation of an i-Size child seat.

Seat position authorised for the installation of a "forward facing" i-Size child seat.

Presence of a Top Tether anchorage point at the rear of the backrest, authorising the installation of an universal ISOFIX child seat.

"Rearward facing" ISOFIX child seat:

- R1: ISOFIX child seat for a baby.
- R2: ISOFIX reduced size child seat.
- R3: ISOFIX large size child seat.

"Forward facing" ISOFIX child seat:

- F2X: ISOFIX child seat for toddlers.
- F2: ISOFIX reduced height child seat.
- F3: ISOFIX full height child seat.

Booster child seat, using seat belt or ISOFIX mountings:

- B2: reduced width booster seat.
- B3: full width booster seat.

Seat position authorised for the installation of an ISOFIX child seat.

Seat position where the installation of an ISOFIX child seat is forbidden.

For seat adjustments, refer to the summary table "Installing universal, ISOFIX and i-Size child seats".

In accordance with European regulations, this table indicates the options for installing child seats secured using the seat belt and universally approved (a) as well as the largest ISOFIX and i-Size child seats on seat positions equipped with ISOFIX mountings in the vehicle.

	Seat numbers										
	Front seats (b)					Rear seats (b) row 2			Rear seats (b) row 3		
	1	2 (g)		3		4	5	6	7	8	9
Front passenger airbag		Deactivated "OFF" (c)	Activated "ON" (d)	Deactivated "OFF" (c)	Activated "ON" (d)						
Position compatible with an universal (a) child seat Rearward facing	no	yes (e)		no		no			no		
Position compatible with an universal (a) child seat Forward facing	no	yes (f)				yes (g)	yes (g) (j)	yes (g)	yes (g)	yes (g) (j)	yes (g)
Position compatible with an i-Size child seat Rearward facing	no	no				yes (m)/ no (n)	yes (j)/ no (n)	yes (m)/ no (n)	yes (m)/ no (o)	yes (j) (m)/no (o)	yes (m)/ no (o)

	Seat numbers										
	Front seats (b)					Rear seats (b) row 2			Rear seats (b) row 3		
	1	2 (g)		3		4	5	6	7	8	9
Front passenger airbag		Deactivated "OFF" (c)	Activated "ON" (d)	Deactivated "OFF" (c)	Activated "ON" (d)						
Position compatible with an i-Size child seat Forward facing	no	no				yes (f) (m) (p)	yes (f) (j) (m) (p)	yes (f) (m) (p)	yes (f) (p)	yes (f) (j) (p)	yes (f) (p)
Position equipped with a Top Tether hook	no	no				yes			yes		
"Carrycot" type of child seat (L1 / L2)	no	no				no			no		
"Rearward facing" ISOFIX child seat (R1 / R2 / R3)	no	no				R3 (h)	R3 (h) (j)	R3 (h)	R3 (i) (k)/R2 (i) (l)	R3 (i) (j) (k)/R2 (i) (j) (l)	R3 (i) (k)/R2 (i) (l)
"Forward facing" ISOFIX child seat (F2 / F2X / F3)	no	no				F3	F3 (j)	F3	F3	F3 (j)	F3

	Seat numbers										
	Front seats (b)					Rear seats (b) row 2			Rear seats (b) row 3		
	1	2 (g)		3		4	5	6	7	8	9
Front passenger airbag		Deactivated "OFF" (c)	Activated "ON" (d)	Deactivated "OFF" (c)	Activated "ON" (d)						
"Booster" child seat (B2 / B3)	no	no				B3	B3 (j)	B3	B3 (k)/ B2 (l)	B3 (j) (k)/B2 (l)	B3 (k)/ B2 (l)

Rules

- A position that is i-Size compatible is also compatible for R1, R2 and F2X, F2, B2.
- A position that is R3 compatible is also compatible for R1 and R2.
- A position that is R2 compatible is also compatible for R1.
- A position that is F3 compatible is also compatible for F2X and F2.
- A position that is B3 compatible is also compatible for B2.

(a) Universal child seat: child seat that can be installed in all vehicles using the seat belt.

(b) Depending on version, refer to the legislation in force in your country before installing a child in this seat position.

(c) To install a "rearward facing" child seat at this seat position, the front passenger airbag MUST be deactivated "OFF".

(d) Only a "forward facing" child seat is authorised at this seat position with the front passenger airbag activated "ON".

(e) For a "rearward facing" and/or a "forward facing" universal child seat (U) in groups 0, 0+, 1, 2 or 3, or dedicated to children between 40 and 150 cm in size only.

(f) For a "forward facing" universal child seat (UF) in groups 1, 2 or 3, or dedicated to children between 76 and 150 cm in size only.

(g) To install a "rearward facing" or "forward facing" child seat on a rear seat, move the seats in front of it forward, then straighten their backrests to allow sufficient room for the child seat and the child's legs.

(h) The front seat must be adjusted so that there is no contact between the child in row 2 and the seat immediately in front.

(i) The seat in row 2 must be adjusted so that there is no contact between the child in row 3 and the seat immediately in front.

(j) The seat can be installed centrally in the vehicle; it then prevents the use of the outer seats.

(k) If 2 individual seats or 1 single individual seat installed in row 3.

(l) If 3 individual seats installed in row 3.

(m) The seat in row 2 cannot be used when an i-Size child seat is installed immediately behind.

(n) Not compatible If 2 individual seats or 1 single individual seat installed in row 2.

(o) Not compatible If 2 individual seats or 1 single individual seat installed in row 3.

(p) Install an i-Size child restraint system only if the individual seats are installed in forward direction.

Steering Wheel

Steering Wheel Adjustment

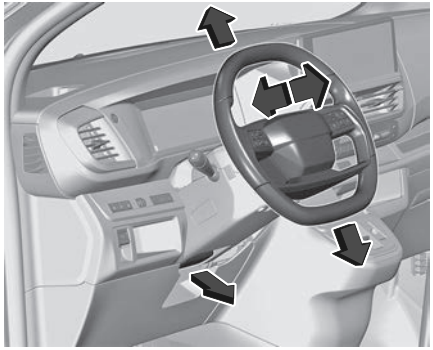

- When stationary, pull the control to release the steering wheel.
- Adjust the height and reach to suit your driving position.
- Push the control to lock the steering wheel.

Steering Wheel Controls

Some driver assistance systems, Infotainment system and a connected mobile phone can be operated via the controls on the steering wheel.

Steering Wheel Lock

The steering wheel lock activates automatically when:

- The vehicle is stationary.
- The ignition has been switched off.

To release steering wheel lock, open and close driver's door and switch the ignition on power mode or start the engine directly.

⚠ WARNING

If the vehicle battery is discharged or in the event of a malfunction, the vehicle must not be towed or tow-started as the steering wheel lock cannot be disengaged.

⚠ WARNING

In the event of a malfunction of the key battery, the steering wheel lock remains engaged. Do not try to start the vehicle by pushing it and do not tow it.

Steering Wheel Shift Paddles (BEV vehicles)

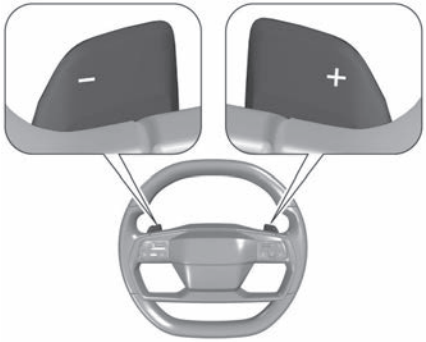

On vehicles with automatic transmission, gearshifting can be operated via + or -.
On BEVs, the regenerative braking mode can be operated via + or -.

Steering Wheel Heating

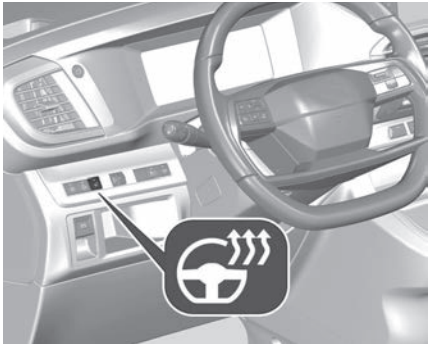

Activate heating by pressing .
Activation is indicated by the LED in the button.
The heating works only when the outside temperature is below 20 °C.

Horn

Press .
The pedestrian horn operates once the vehicle is moving and at speeds of up to 30 Km/h (19 mph), in forward or reverse gear.
This function cannot be deactivated.

Ignition Switch

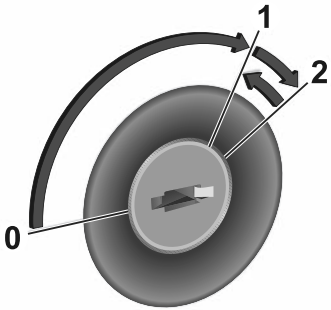

0 Ignition off: Some functions remain active until key is removed or driver's door is opened, provided the ignition was on previously.

1 Ignition on "Power mode": Ignition is on, diesel engine is preheating, control indicators illuminate and most electrical functions are operable.

2 Engine start: Release key after engine has been started.

⚠ DANGER

Never remove the key from ignition switch during driving as this will cause, depending on version, steering wheel lock.

Power Button

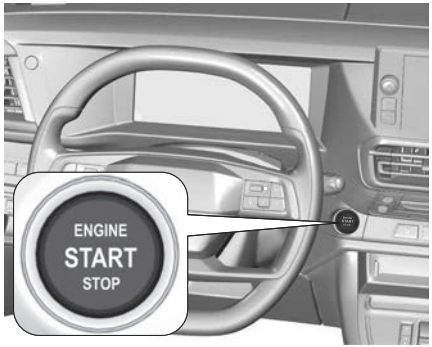

The electronic key must be inside the vehicle.
Refer to the Starting and Stopping the Engine section ⇨ 145

Wipers and Washers

Windshield wiper and washer

ⓘ NOTE

With the wiper lever in position AUTO or INT, 1 or 2 and the ignition switched on after more than one mi-

nute: When the outside temperature is below +3°C, the windshield wiper activates only at a speed above 10 km/h. When the outside temperature is above +3°C, the windshield wiper activates immediately.

NOTE

In position 1 or 2, the wiping frequency is automatically reduced at a speed below 5 km/h and returns to the original frequency at a speed above 10 km/h.

Windshield wiper with adjustable wiper frequency

0	Off
1	Normal
2	Fast
INT	Intermittent wiping
x1	Single wipe

Do not use if the windshield is frozen. Switch off in vehicle washes.

Adjustable wiper frequency

Wiper lever in position INT, it is possible to select five frequency levels by turning the ring.

When selecting a lower frequency, a confirmation wiping is given.

Windshield washer

Pull lever. Washer fluid is sprayed onto the windshield and the wiper wipes a few times.

Rain sensing wiper control

Windshield wiper with rain sensor

0	Off
1	Normal
2	Fast
AUTO	Automatic wiping
x1	Single wipe

In AUTO position, the rain sensor detects the amount of water on the windshield and automatically regulates the frequency of the windshield wiper.

Do not use if the windshield is frozen. Switch off in vehicle washes.

Keep the sensor free from dust, dirt and ice.

Adjustable sensitivity of the rain sensor

Turn the adjuster wheel to adjust the sensitivity.
The longest dash indicates the highest sensitivity and the shortest dash indicates the lowest sensitivity.
A wiping cycle confirms the selection.

Rear window wiper and washer

Rear window wiper

0 Off

Intermittent wiping

Screen wash

Do not use if the rear window is frozen or when a bicycle carrier is used.
Switch off in vehicle washes.
The rear window wiper comes on automatically when the windshield wiper is switched on and reverse gear is engaged.
The function can be activated or deactivated in the settings app in the Touch Screen.
To activate the rear wiper the next time the ignition is switched on, turn to position 0 and back to .

Rear window washer

Select , washer fluid is sprayed onto the rear window and the wiper wipes as long as is selected.

Exterior Lights

⚠ WARNING

Do not look directly into the LED headlights. Risk of eye damage.

Lighting Controls

Depending on version, the light control stalk may be fitted with either a two-position or a three-position lighting ring:

Three position

Two position

To activate the exterior lighting, rotate the outer knob on the left multi function lever to one of the following positions:

AUTO Automatic light control switches automatically between daytime running light and headlight

Sidelights

High beam

Low beam

Automatic Lighting

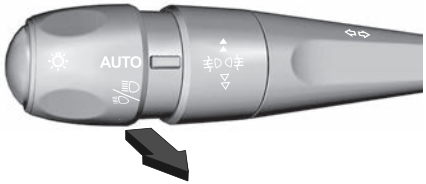

When the adjuster wheel is in position AUTO and the engine is running, the system switches between daytime running lights and headlights automatically depending on the external lighting conditions and information given by the wiper system.

Automatic headlight activation

Turn the adjuster wheel in position: AUTO During poor lighting conditions the headlights are switched on.

Additionally, headlights are switched on if the windshield wipers have been activated for several wipes.

Automatic Lighting

The automatic lighting systems use a detection camera, located at the top of the windshield.

Operating limits

The system may be disrupted or not work correctly:

- When visibility conditions are poor (e.g. snowfall, heavy rain).
- If the windshield is dirty, misted-up or masked (e.g. sticker) in front of the camera.
- If the vehicle is facing highly reflective signs or safety barrier reflectors.

The system is not able to detect:

- Road users that do not have their own lighting, such as pedestrians.

- Vehicles with hidden lighting (e.g. travelling behind a safety barrier on the motorway).
- Vehicles at the top or bottom of a steep slope, on winding roads, on crossroads.

⚠ CAUTION

Clean the windscreen regularly, particularly the area in front of the camera.
The internal surface of the windscreen can also become misted around the camera.
In humid and cold weather, demist the windscreen regularly.
Do not allow snow to accumulate on the bonnet or roof of the vehicle as this could obstruct the camera.

Headlight height adjustment

Manual adjustment

To adapt headlight range to the vehicle load to prevent dazzling: turn thumb wheel to required position.

0	Front seats occupied
1	Front row and third row occupied; All rows occupied.
2, 3	All seat rows occupied plus load in trunk
4, 5	Driver and permissible max. load in trunk

0	Driver's seat occupied
2, 3, 4	Driver and permissible max. load

ⓘ NOTE

Travelling abroad

If planning to use your vehicle in a country that drives on the other side of the road, the dipped beam headlamps must be adjusted to avoid dazzling oncoming drivers.
Contact a dealer or a qualified workshop.

Headlights when driving abroad

If planning to use your vehicle in a country that drives on the other side of the road, the dipped beam headlamps must be adjusted to avoid dazzling oncoming drivers.
Contact your dealer or a qualified workshop.

High beam

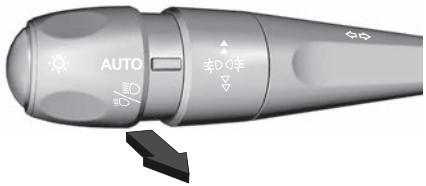

To activate or deactivate the high beam, pull the lever beyond the resistance point.

High beam assist

The system switches from low beam to high beam and vice versa to prevent glaring. Once activated, high beam assist remains active and switches high beam on and off depending on surrounding conditions. The latest setting of the high beam assist will remain set after the ignition is switched on again.

Activation

The high beam assist can be activated via the vehicle settings menu in the Touch Screen.
High beam is switched on automatically in dark surroundings at a speed above 45 km/h. High beam is switched off at a speed below 35 km/h, but high beam assist remains active.
The green control indicator illuminates continuously when the high beam assist is activated, the blue illuminates when high beam is on.
High beam assist switches automatically to low beam when:

- Driving in urban areas.
- Camera detects heavy fog.
- Rear fog light is switched on.
- Oncoming or preceding vehicles are detected by the camera.

If there are no restrictions detected, the system switches back to high beam.

Deactivation

The system can be deactivated via the vehicle settings menu in the Touch Screen.

Headlight flash

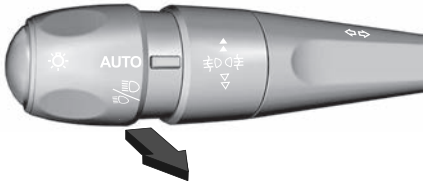

To activate the headlight flash, pull the lever briefly without passing the resistance point.

Turn Signals

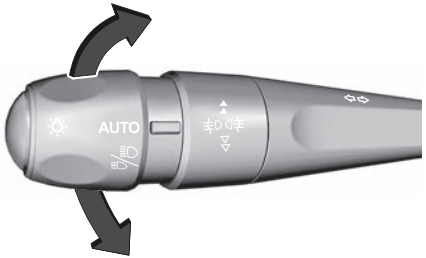

Up	Right turn light
Down	Left turn light

A resistance point can be felt when moving the indicator lever.
Constant flashing is activated when the indicator lever is being moved beyond the resistance point. It is deactivated when the steering wheel is moved in the opposite direction or indicator lever is manually moved back to its neutral position. After 20 seconds the volume of the audible signal will increase if the speed is above 80 km/h (50 mph).
Activate temporary flashing by holding the indicator lever just before the resist-

ance point. Turn lights will flash until indicator lever is being released.
To activate three flashes, tap the indicator lever briefly without passing the resistance point.

Emergency Signals

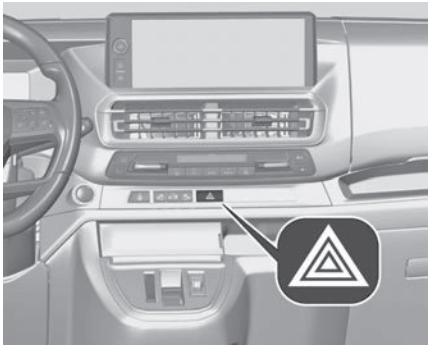

Operated by pressing ⚠.
Hazard warning flashers are switched on automatically in the following situations:

- Braking in an emergency (depending on the force of deceleration).
- In the event of an accident.

They are switched off the first time you accelerate or if you press ⚠.

Front Fog lights

Turn the control wheel once to activate or deactivate the front fog lights.

Light switch in position AUTO: switching on front fog lights will switch headlights on automatically.

Rear Fog lights

Depending on version:

Turn the adjuster wheel forwards / backwards to switch on / off the rear fog light.

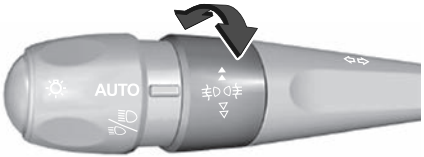

Turn the adjuster wheel forwards / backwards to switch on / off the front fog light.
Turn the adjuster wheel two times forwards / backwards to switch on / off the rear fog light.

Light switch in position AUTO: switching on rear fog light will switch headlights on automatically.

Light switch in position : rear fog light can only be switched on with front fog lights.

Reverse lights

The reverse light comes on when the ignition is on and reverse gear is selected.

Daytime running lights

Daytime running lights increase visibility of the vehicle during daylight.
They are switched on automatically when the engine is running or by adjusting 0 or AUTO.

The system switches between daytime running lights and low beam automatically, depending on the lighting conditions.

Automatic Headlights Dipping

Available only on versions equipped with Full LED technology headlamps.

With the ring of the lighting control stalk in the AUTO position and the function activated on the touch screen, this system automatically switches between dipped and main beam headlamps, according to lighting and traffic conditions, using a camera located at the top of the windshield.

⚠ WARNING

This system is a driving aid.
The driver remains responsible for the vehicle's lighting, its correct use in the prevailing light, visibility and traffic conditions, and for compliance with driving and vehicle regulations.

ⓘ NOTE

The system becomes operational when the vehicle exceeds 16 mph (25 km/h).
When the speed falls below 9 mph (15 km/h), the function is no longer operational.

Welcome Lighting

Some or all of the following lights are switched on for a short time by unlocking the vehicle with the radio remote control:

- Headlights;
- Tail lights;
- Interior lights.

The number of activated lights depends on the surrounding light conditions.
The lighting switches off immediately when the ignition is switched on.
The following lights will additionally switch on when the driver's door is opened:

- Illumination of some switches;
- Instrument cluster.

Exit lighting

The following lights are switched on when the ignition is switched off:

- Headlights;
- Interior lights;
- Center console lighting.

They will switch off automatically after a delay. This function works only in the dark.
The function can be activated or deactivated in the settings app ⚙ in the Touch Screen.

Corner Lights

Activated at a speed of up to 40 km/h when turning off. Depending on the steering angle or the activation of the turn lights the front fog light illuminate the direction of travel.
This function can be activated or deactivated in the vehicle personalisation.

Interior Lights

Courtesy Lights

During entry and exit of the vehicle, the front and rear courtesy lights automatically switch on and then off after a delay.

Front and rear courtesy light

Operate rocker switch:

Automatic switching on and off

Press for turn the light on

Press for turn the light off

Illustration shows rear courtesy light.

Reading lights

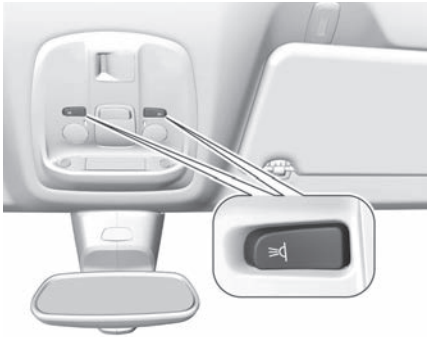

Operated by pressing and in the courtesy lights.

Illustration shows rear courtesy lights

Vehicle Locator Lighting

This function allows to locate the vehicle, e.g., in weak lighting conditions using the remote control.
The headlights come on and the turn lights flash for ten seconds.
Press 🔒 on the remote control.

Interior Ambient Lights

The brightness of the following lights can be adjusted in the settings app ⚙ in the Touch Screen when the exterior lights are on:

- Instrument panel illumination;
- Touch screen;
- Illuminated switches and operation elements.

Load compartment lighting

The lower load compartment lights come on when the load compartment is opened.

One of the load compartment lights can also be used as a torch.
Pull the torch out from the top of the recess.

Sunvisor lights

Illuminates when the cover is opened.

Sunroof

Glass panel

Sunblinds

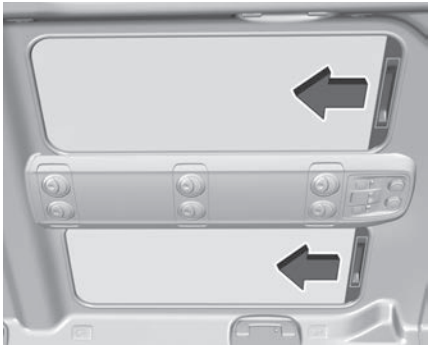

The sunblinds are operated manually. Slide the respective sunblind to the desired position.

Interior Storage / Interior Features

Storage compartments

⚠ WARNING

Do not store heavy or sharp objects in the storage compartments.

Glove Compartment

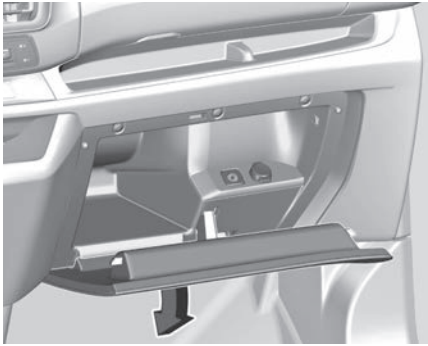

To open the glovebox pull the handle. Some versions have a power outlet and the switch for the front passenger airbag deactivation in the storage compartment.
The glovebox should be closed whilst driving.

Cupholders

Front cupholder

Cup holders are located at the sides of the instrument panel.

Rear cupholder

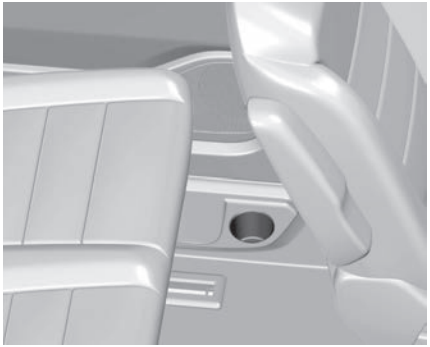

A cup holder for the second row seat can be located in the storage compartment in the foot well.

Depending on version, cupholders for the third row seats can be located in the sides of the load compartment.

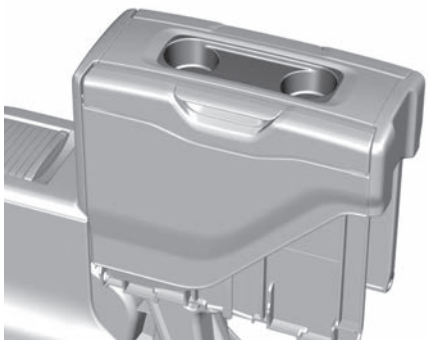

Fold up the multifunctional table.

Front storage

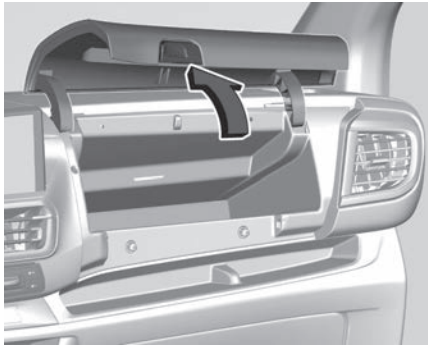

To open the storage compartment press the button and open the cover. Some versions have a glovebox cooler in the storage compartment.

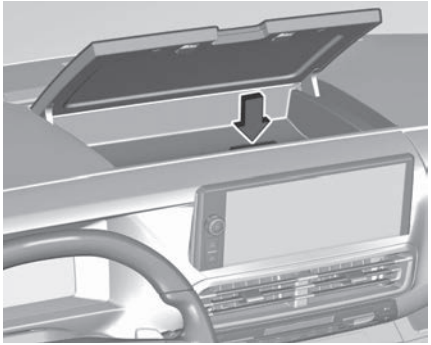

To open the storage compartment press the button and open the cover.

Seatback Storage

Storage box

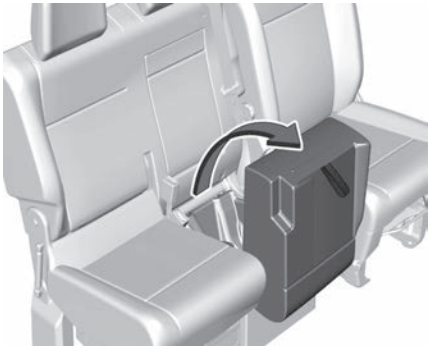

There may be a storage box under the centre bench seat next to the driver seat. Lift up the seat cushion by pulling the handle.

There may be a storage box under the centre and left bench seat. Lift up the seat cushion.
Depending on version the storage box can be removed from the back to accommodate long objects.

12V Power Outlets

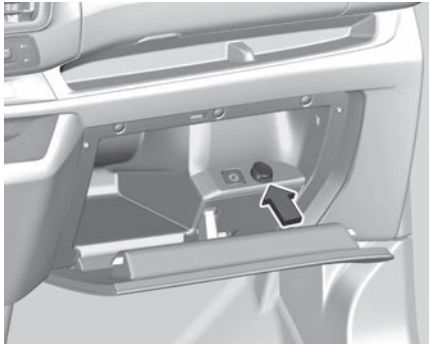

A 12 V power outlet is located in the glovebox.

A 12 V power outlet may be located on the third row left side trim.

Do not exceed the maximum power consumption of 120 W.

A 220 V power outlet may be located underneath the front passenger seat.
Do not exceed the maximum power consumption of 120 W.
With ignition off, the power outlets are deactivated. Additionally the power outlets are deactivated in the event of low vehicle battery voltage.
Electrical accessories that are connected must comply with the electromagnetic compatibility requirements laid down in DIN VDE 40 839.
Do not connect any current-delivering accessories, e.g. electrical charging devices or batteries.
Do not damage the outlet by using unsuitable plugs.

USB Ports

Depending on version, two USB ports are located in the instrument panel. The left USB port can charge external devices and provide a data connection to the Infotainment system. The right USB port can only charge external devices.

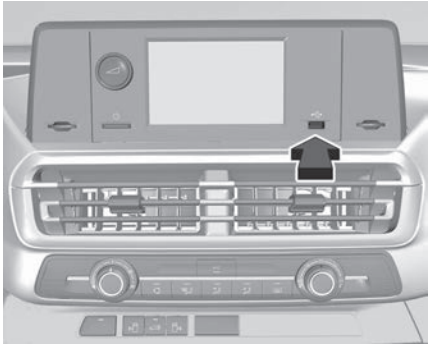

Depending on version, a USB port is located next to the Touch Screen. It can charge external devices and provide a data connection to the Infotainment system.

Two USB ports may be located at the lower left side of the B-pillar. Both USB ports can only charge external devices.

NOTE

The sockets must always be kept clean and dry.

Wireless Phone Charger

WARNING

Inductive charging can affect the operation of implanted pacemakers or other medical devices. If applicable, seek medical advice before using the inductive charging device.

WARNING

Remove any metal objects from the charging device before charging a mobile device, as these objects could become very hot.

To charge a mobile device:

1. Remove all objects from the charging device.
2. Place the mobile device on the charging area. Note that the mobile device must be placed between the positioning aids.

Qi compatible mobile devices can be charged inductively.
On some mobile devices, a back cover with an integrated coil or a jacket may be required to use inductive charging.
Protective cover for the mobile device could have impact on the inductive charging.
In the event that the mobile device is not charging properly, rotate it 180° and place it on the charging device again.

Status LED

The LED indicates the current charging status.

Illuminates green

The mobile device is charging.

Flashes yellow

The mobile device has not been centred properly in the charging zone or an unknown object has been detected in the charging zone.

Illuminates yellow

There is a problem with the mobile device's battery or a fault of the inductive charger has been detected.
If the problem persists, seek the assistance of a workshop.

Load compartment

Depending on version, the load compartment area can be increased by folding up or removing the seats in the second and third row.

Vehicle version with seat benches in second and third row

When loading the following has to be observed:

- Only store objects on seats of the third row folded down to the table position, when the seats in the second row are also folded down to the table position.

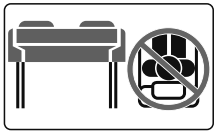

- Bench seat in the second or third row in the tilted position: the outer seat must not be occupied.

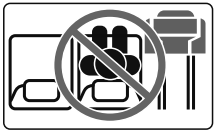

- Single bench seat in the second or third row in the tilted position: the center seat must not be occupied.

- Seat in the second row folded down to the table position: respective seat in the third row must not be occupied.

- Seat in the second row in the tilted position: respective seat in the third row must not be occupied.

Load compartment cover

Do not place any objects on the cover.

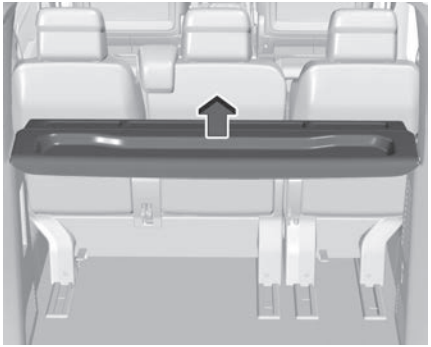

Raise the load compartment cover to remove it.
To install the load compartment cover insert it in the retainers on both sides.

Lashing eyes

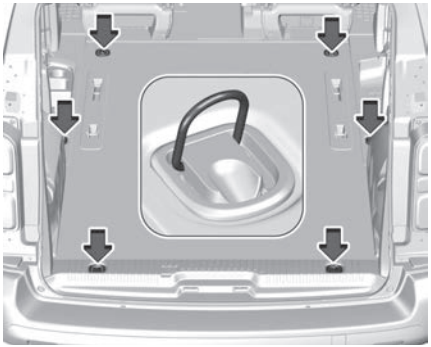

The lashing eyes are designed to secure items against slippage, e.g. using lashing straps or luggage net.
Lashing eyes may be located on the vehicle floor. The number and location of the lashing eyes may vary depending on the vehicle.

Cargo management system

Flap behind the passenger seat

Depending on version, a partition behind the front seats protects the driver and front passengers against the risk of load movement.
There may be a flap in the partition behind the passenger seat which can be removed to accommodate long objects.
If the outer passenger seat is folded and the flap is open, the centre seat has to stay free.

Removing the flap (type A)

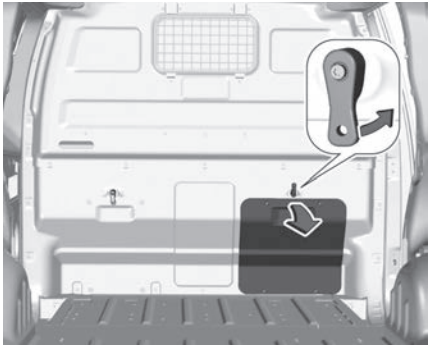

1. Release the locking device, lower the flap and then remove it;
2. Stow the flap behind the driver's seat;
3. Turn the locking device upwards.;
4. Put the hinges of the flap in their housing, lift the flap and close the locking device.

Sliding the flap (type B)

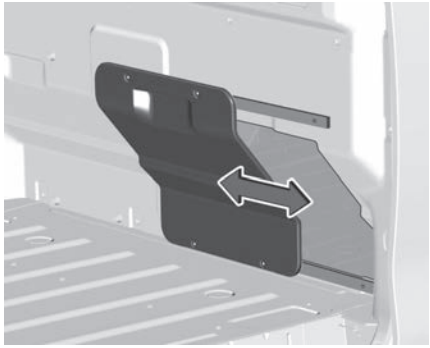

Slide the flap to the side. It is kept in position by magnets.

Fitting the protective net

The protective net must be installed whenever the bench seat of the front passenger side is folded and the partition flap is open.

1. Lift the seat cushion of the bench seat of the front passenger side.

See the section seat folding in the chapter Front Seats.

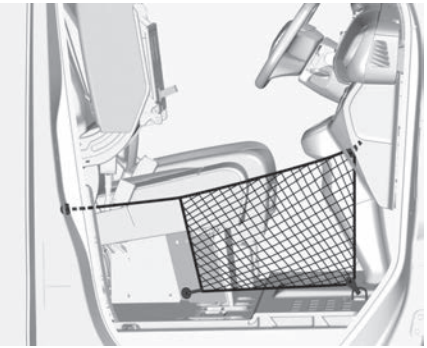

2. Fix the net like shown on the picture.

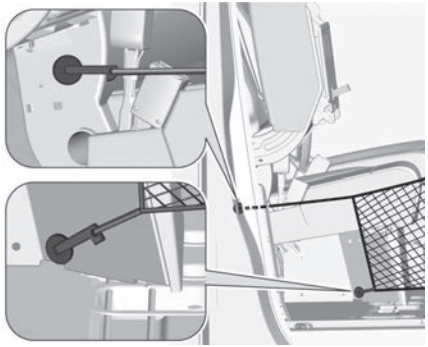

3. Fit the attachment in the opening. To lock the attachment turn it clockwise a quarter turn.

4. Attach the hooks to the lashing eyes in the glovebox and on the floor.

After transportation remove the protective net and fold down the seat.

Second row bench seat in the commercial vehicle

The bench seat in the second row can be folded to increase the load compartment.

⚠ WARNING

When seats are being adjusted or folded, keep hands and feet away from the moving area. Risk of injury.
Ensure that there are no objects on the anchor points or rails.
Never adjust seats while driving as they could move uncontrollably.
Drive only with engaged seats and backrests.

Folding

1. Tilt the head restraints to the front;
2. Pull the loop upwards to unlock the bench seat;
3. Raise the bench seat taking the handle and fold the bench seat to the front until it is engaged.

Unfolding

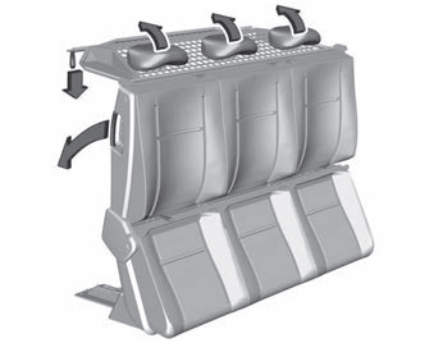

1. To restore the bench seat to the original position pull the loop to unlock it;
2. Take the handle to fold the bench seat to the back until it is engaged in the original position;
3. Tilt up the head restraints.

Safety net

Safety net behind the seats

Depending on version, the safety net can be installed behind the second row seats, the third row seats or behind the front seats.
To increase the loading capacity the seats behind the safety net can be folded or removed.

Seat backrests in front of the safety net must be raised up.
Passengers must not be transported behind the safety net.

Installation in the roof frame

1. There are installation openings on both sides in the roof frame. If present, open the covers.
2. Suspend and engage the rod of net at one side, compress rod and suspend and engage at the other side.

Installation on the floor

1. a) Installation with lashing eyes. Attach the hooks of safety net straps in the lashing eyes.

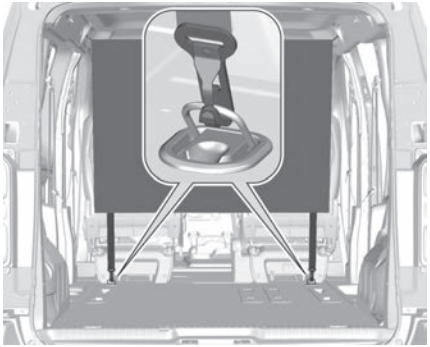

b) Installation with rear seats on rails Insert the fixings in the floor anchorages on both sides. To lock the fixings turn them clockwise a quarter turn. Place them as close as possible to the end of the rail.

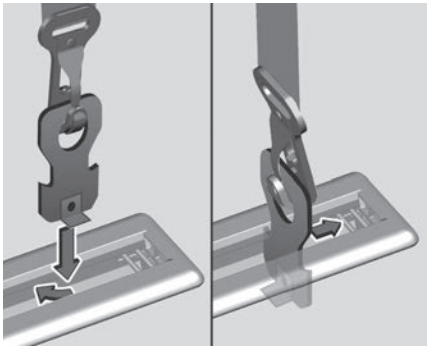

c) Installation with fixed rear seats
Insert the fixings in the floor anchorages on both sides.

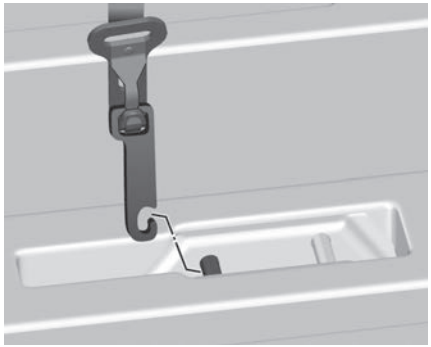

It is possible to install the safety net together with folded seats.

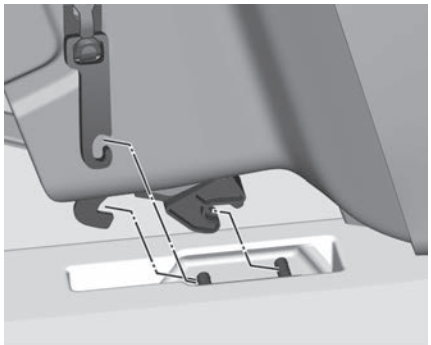

2. Tension both straps by pulling at the loose end.

Safety net on the floor

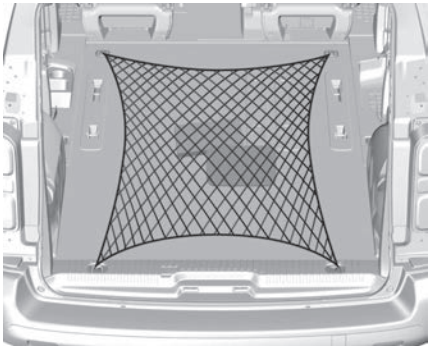

Attached to the lashing eyes on the rear floor, it allows objects to be held down.

DASHBOARD INSTRUMENTS AND CONTROL

Instrument Panel

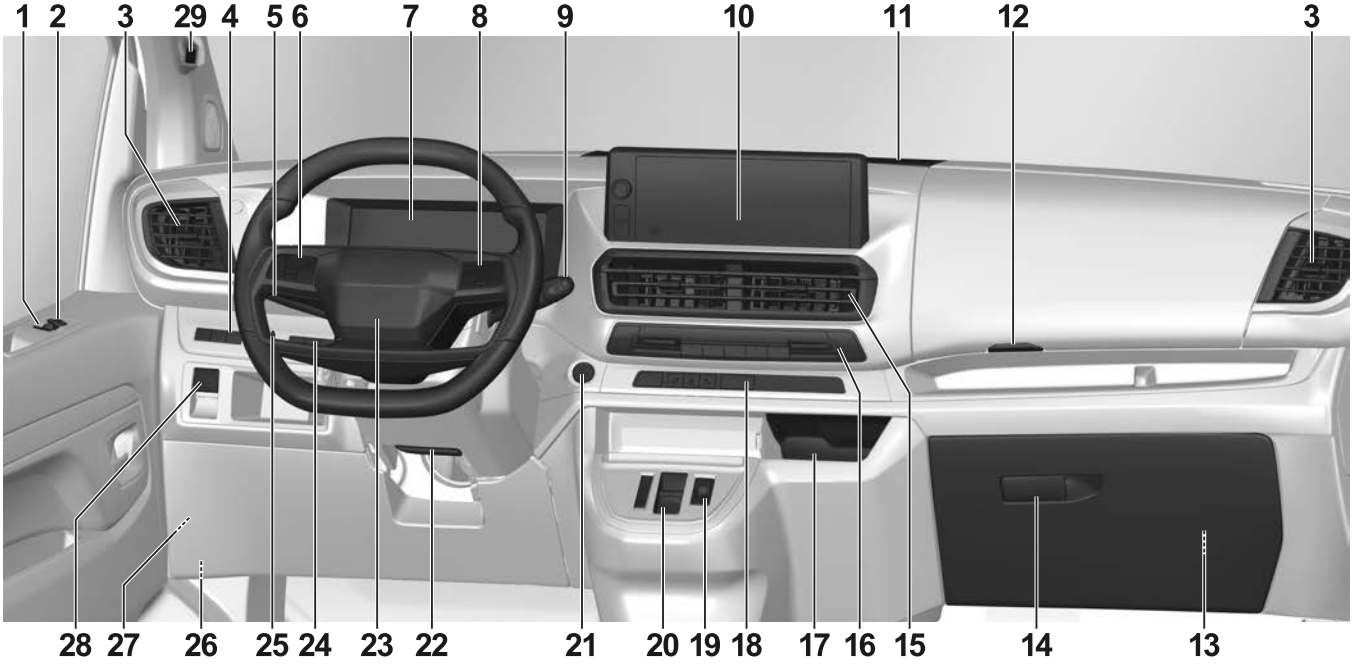

1 Power windows

2 Exterior mirrors

3 Side air vents

4 Lane keep assist, Descent control system, Heated steering wheel

5 High beam, Headlight flash, Turn lights, Fog lights, Parking lights

6 Cruise control system, Speed limiter, Adaptive cruise control

7 Instrument Cluster

8 Infotainment controls

9 Windshield wiper and washer, Rear window wiper and washer

10 Touch Screen

11 Front storage

12 Front storage

13 Airbag deactivation, Power outlet

14 Glovebox

15 Centre air vents

16 Climate control system

17 Inductive charging

18 Central locking system, Automatic locking, Electric child locks, Hazard warning flashers, Power sliding doors

19 Drive modes

20 Selector drive unit, Selector automatic transmission

21 Power button

22 Steering wheel adjustment

23 Horn

24 Temperature preconditioning, Anti-theft system, Heated windshield

25 Headlight range adjustment

26 Hood release lever

27 Fuse box

28 Electric parking brake

29 Driver Attention Assistance Camera

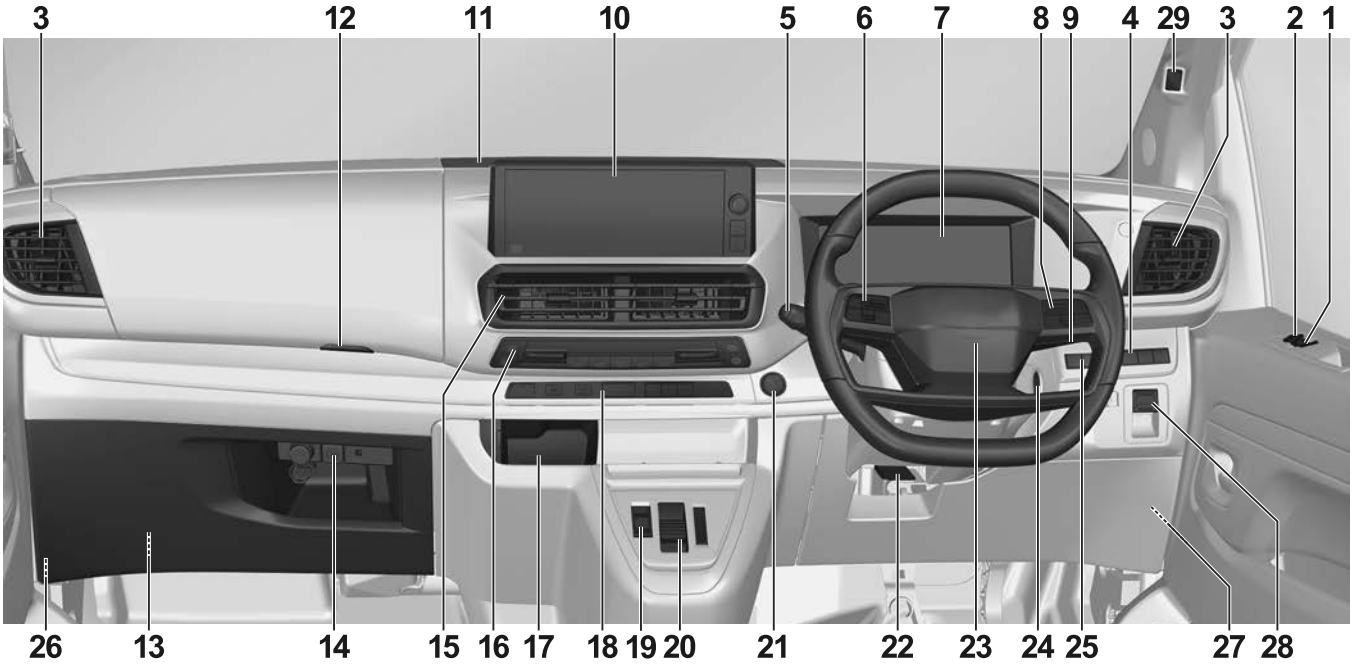

1 Power windows

2 Exterior mirrors

3 Side air vents

4 Lane keep assist, Descent control system, Heated steering wheel

5 High beam, Headlight flash, Turn lights, Fog lights, Parking lights

6 Cruise control system, Speed limiter, Adaptive cruise control

7 Driver Information Centre

8 Infotainment controls

9 Windshield wiper and washer, Rear window wiper and washer

10 Touch Screen

11 Front storage

12 Front storage

13 Airbag deactivation, Power outlet

14 Glovebox

15 Centre air vents

16 Climate control system

17 Inductive charging

18 Central locking system, Automatic locking, Electric child locks, Hazard warning flashers, Power sliding doors

19 Drive modes

20 Selector drive unit, Selector automatic transmission

21 Power button

22 Steering wheel adjustment

23 Horn

24 Temperature preconditioning, Anti-theft system, Heated windshield

25 Headlight range adjustment

26 Hood release lever

27 Fuse box

28 Electric parking brake

29 Driver Attention Assistance Camera

Instrument Cluster

Type A

Type B

- Trip odometer;
- Gear shift indication;
- Service information;
- Vehicle and warning messages;
- Driver assistance messages;
- Pop-up messages;
- Infotainment Information.

Speedometer

Indicates vehicle speed.

Type A

Type B

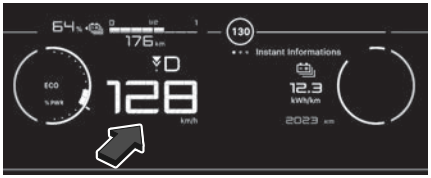

Odometer

The total recorded distance is displayed in km.

Type A

Type B

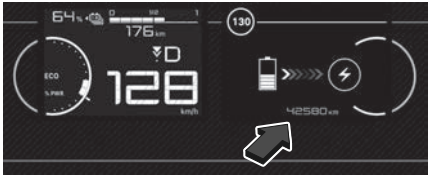

Trip odometer

The recorded distance since the last reset is displayed in the Driver Information Centre.
Two trip odometer pages are selectable in the trip / autonomy information menu for different trips.
Trip odometer counts up to 9,999 km.

Press button for two seconds to reset the trip odometer.

Type A

Type B

Tachometer

Displays the engine speed.
Drive in a low engine speed range for each gear as much as possible.

⚠ CAUTION

If the indicator is in the red warning zone, the maximum permitted engine speed is exceeded. The engine can be damaged.

Type A

Type B

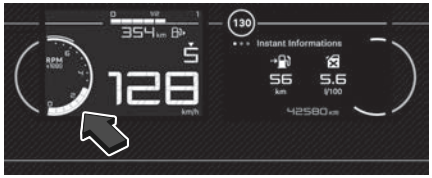

Tachograph

For information on tachograph operation and use, refer to the Owner's manual provided by the device manufacturer. The vehicle must be equipped with a tachograph when its total weight, with or without a trailer, exceeds 2.5 tons.

NOTE

Anyone who modifies the monitoring device or the signal transmission system in a way that affects data recording by the monitoring instrument, particularly for fraudulent purposes, may be subject to criminal or administrative penalties under applicable national regulations.

NOTE

If the vehicle is equipped with a tachograph and will remain parked for more than 5 days, it is recommended to disconnect the negative battery terminal to help preserve the battery charge.

CAUTION

Do not use abrasive cleaners or solvents to clean the device.
To clean the device externally, use a damp cloth or special products for the care of synthetic materials.

CAUTION

The tachograph is installed and sealed by authorized personnel. Do not attempt to access the device, the power supply, or the recording cables in any way. The owner of the vehicle in which the tachograph is installed is responsible for ensuring that the device is checked regularly. The inspection must be carried out at least every two years, and a functional test must be performed to verify proper operation. After each inspection, make sure the data label is renewed and contains all required information.

Fuel level gauge

Control indicator ● or illuminates yellow if the fuel level is low.
Never run the fuel tank dry.
The arrow indicates the vehicle side where the fuel filler flap is located.
The top-up quantity may be less than the specified fuel tank capacity, due to the remaining fuel in the tank.

Type A

Type B

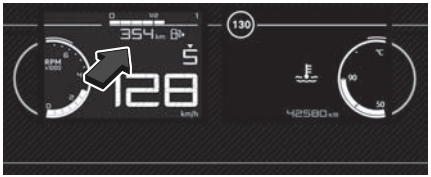

High-voltage battery charge status

Displays the high voltage battery state of charge.

Type A

Type B

Trip computer

The trip computer displays current trip information since the last reset.

Pressing the button displays the following tabs in turn:

- Current information
  - Total range;
  - Current consumption;
  - Time counter for the stop-start mode;
  - Total distance recorder.
- Trip 1
  - Average speed;
  - Average consumption;
  - Distance travelled.
- Trip 2
  - Average speed;
  - Average consumption;
  - Distance travelled.

The time counter is reset each time the ignition is switched on.
To reset a trip, press the button for more than two seconds when the desired trip is displayed.

Power flow

The power indicator gauge informs about the current energy situation of the vehicle.

Charge	High voltage battery is being charged with energy resulting from braking or deceleration of the vehicle.
Eco	An optimum in energy is accessible in all driving modes.
Power	Vehicle is driven in a dynamic driving style with focus on performance.

Type A

Type B

Comfort consumption gauge

The comfort consumption gauge informs about the current electric consumption caused by the following thermal consumers:

- Heating;
- Air conditioning;
- Heated windshield;
- Heated rear window;
- Heated seats.

If the drive mode Eco mode is selected, the performance of the thermal consumers is reduced.

Type A

Type B

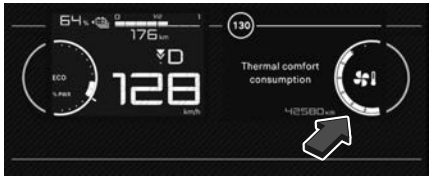

Engine coolant temperature gauge

Displays the coolant temperature.
The red zone indicates that the operating temperature of the engine is too high.

⚠ CAUTION
If engine coolant temperature is too high, stop vehicle, switch off engine. Danger to engine. Check coolant level.

Type A

Type B

Engine oil level monitor

The state of the engine oil level is displayed in the Driver Information Centre for a few seconds following the service information after switching on the ignition.
A proper state of engine oil level is confirmed.
If engine oil level is low, flashes and warning message is indicated in the Driver Information Centre.
Depending on the version, OIL flashes in the Driver Information Centre. Confirm engine oil level by using the oil dipstick and top up engine oil respectively.
A fault of measurement is indicated by OIL or a message in the Driver Information Centre together with .
Check engine oil level manually by using the dipstick.

Service display

The service system informs when to change the engine oil and filter or a vehicle service is required. Based on driving conditions, the interval at which an engine oil and filter change is required can vary considerably.
A required service due is displayed in the Driver Information Centre for several seconds after switching on the ignition.
If no service is required for the next 3000 km or more no service information appears in the display.
If service is required within the next 3000 km, the remaining distance to the next service due, the distance travelled since the last service due or the time period that remains to the next service due is indicated for several seconds.
Simultaneously symbol 🔧 illuminates temporary as reminder.
If service is required in less than 1000 km, the remaining distance to the next service due, the distance travelled

since the last service due or the time period that remains to the next service due is indicated for several seconds. Simultaneously 🔧 illuminates permanently as reminder.
Overdued service is indicated by a message in the Driver Information Centre which indicates the overdued distance. 🔧 flashes and then illuminates permanently until service is executed.

Reset of service interval

After each service, the service indicator must be reset to ensure proper functionality. It is recommended to seek the assistance of a workshop.

Retrieving service information

The status of the service information can be retrieved at any time via the Touch Screen. Press Check in the vehicle settings menu. The service information is displayed for a few seconds.

Widgets

A widget is the indication of specific information or gauge, e.g. radio information, navigation information or the engine coolant temperature gauge.

The Driver Information Center can display one widget per page, the Info Display can contain several widgets.
To add a widget to a page, touch ⊞.

Warning And Control Indicator Lights

Control indicators

The control indicators described are not present in all vehicles. The description applies to all instrument versions. Depending on the equipment, the position of the control indicators may vary. When the ignition is switched on, most control indicators will illuminate briefly as a functionality test.
The control indicator colours mean:

Red	Danger, important reminder
Yellow	Warning, information, fault
Green	Confirmation of activation
Blue	Confirmation of activation
White	Confirmation of activation
Grey	System paused, at least one system limitation has been detected

Control indicators are located in the Infotainment Cluster ⇨ 102

Overview

The numbers in the overview table indicate what to do, when a control indicator illuminates or flashes.

(1) Only for information

(2) For information and warning: an action may be necessary

(3) Seek the assistance of a workshop

(4) Stop engine and seek the assistance of a workshop

(5) Have the cause of the fault remedied immediately by a workshop

Red warning and indicator lights

(4) Stop engine

(4) Engine coolant temperature high

(4) Engine oil pressure

(5) Service vehicle soon

(2) BEV charging cable connected

(4) High voltage battery temperature high

(4) 12 V battery charging system

(2) Door open

(2) Seat belt reminder

(1) / (5) Electric parking brake

(5) Brake system

(1) Rain sensor

(2) Side blind spot alert

(2) Airbag activated

(2) Airbag deactivated

(2) Gear shifting

Orange warning and indicator lights

(5) Service vehicle soon

(4) Power steering

(1) Preheating

(1) / (3) Exhaust filter

(2) Water in fuel filter

(2) Low fuel

(2) HV battery level low

(2) BEV reduced engine power (Tortoise Mode)

(3) HV pedestrian safety alert failure

(5) Malfunction indicator light

(4) System check

(1) AdBlue

(1) Automatic operation of electric parking brake deactivated

(5) Electric parking brake failure

(4) Braking

(2) / (3) Active emergency braking

(2) Antilock brake system (ABS)

(2) / (5) Electronic Stability Control and Traction Control system

(2) Electronic Stability Control and Traction Control system deactivated

(2) / (3) Traffic sign assistant

(2) Lane keep assist

(2) / (3) Driver alert

(5) Airbag and belt tensioners

(2) / (3) Tire deflation detection system

(1) / (3) Parking assist

(1) Stop-start system deactivated

(1) Rear fog light

(2) Transmission Overheating

Green warning and indicator lights

(1) Stop-start system

(1) Vehicle ready

(2) Descent control system

(1) Turn lights

(1) Daytime running light / Sidelights

(1) Low beam

(1) High beam assist

(1) Front fog lights

Blue warning and indicator lights

(1) High beam

Red warning and indicator lights

Major failure - Stop The Vehicle

Illuminates red.

Fixed, associated with another warning light, accompanied by the display of a message and an audible signal.
A serious failure with the engine, braking system, power steering or automatic gearbox or a major electrical failure has been detected.

Air Bag Warning Light

Illuminates red.
Fixed.

The front passenger airbag is activated.

The control is set to the "ON" position.

In this case, do not install a "rearward facing" child seat on the front passenger seat - risk of serious injury!

Illuminates red.
Fixed.

The front passenger airbag is deactivated.

The control is set to the "OFF"position.

A "rearward facing" child seat can be installed, unless there is a failure with the airbags (Airbags warning light on).

Illuminates orange.
Fixed.

One of the airbags or seat belt pyrotechnic pretensioners is failure.

Brake Warning Light

Illuminates red.
Fixed.

The electric parking brake is applied.

Illuminates red.
Flashing.

Application/release is failure.

Illuminates red.
Fixed.

The parking brake is applied or not properly released.

Illuminates red.
Fixed.

The brake fluid level in the braking circuit has dropped significantly.

Illuminates orange.
Fixed.

A minor failure with the braking system has been detected.
Drive carefully.

Battery Charge Warning Light

Illuminates red.
Fixed.

The battery charging circuit is failure (e.g. dirty terminals, loose or severed alternator belt).

Door Open Warning Light

Illuminates red.

Fixed, associated with a message indicating which access is open.
An audible signal supplements the alert if the speed is higher than 6 mph (10 km/h).
A door, the boot, the tailgate or the opening rear screen is still open (depending on version).
Close whichever access is open.

If your vehicle is equipped with a right-hand side-hinged door, this warning light will not indicate that it is open.

Drowsy Driver Detected Warning Light

Illuminates orange.
Fixed.

The system is deactivated.

Illuminates orange.

Fixed, accompanied by the display of a message and an audible signal.
The system has a failure.

Illuminates orange. Fixed, accompanied by the display of the message "Driving Assistance Sensor blind: Clean sensor, see User Manual ".

The sensor is masked.
Stop as soon as it is safe to do so and switch off the ignition.
Clean the front camera.

Engine Coolant Temperature Warning Light

Illuminates red.
Fixed.

The temperature of the cooling system is too high.

Oil Pressure Warning Light

Illuminates red.
Fixed.

There is a failure with the engine lubrication system.

Charging Cable Connected Warning Light

Illuminates red.

Fixed when the ignition is switched on.
The charging cable is connected to the vehicle's connector.

Illuminates red.

Fixed when the ignition is switched on, accompanied by a message.
It is not possible to start the vehicle while the charging cable is connected to the vehicle’s connector.
Disconnect the charging cable and close the flap.

System Malfunction Warning Light

Illuminates red.
Fixed.

A failure involving the electric motor or traction battery has been detected.

Traction Battery Temperature Warning Light

Illuminates red.
Fixed, combined with the STOP warning light, accompanied by the display of a message and an audible signal.

The traction battery's temperature is too high.

Evacuate the vehicle as quickly as possible and move to a safe distance.

Seat Belt Reminder Warning Light

Illuminates red.
Fixed or flashing, accompanied by an increasing audible signal.

A seat belt has not been fastened or has been unfastened (depending on version).

Traction Battery failure Warning Light

Illuminates red.
Fixed, combined with the STOP warning light, accompanied by the display of a message and an audible signal.

The traction battery has a failure.

Electronic Brake Force Distribution (EBFD) Warning Light

Fixed.
The electronic brake force distribution (EBFD) system is failure.

Orange warning and indicator lights

Power Steering failure Warning Light

Illuminates orange.
Fixed.

A minor failure in the power steering has been detected. Drive carefully at moderate speed.

Service Warning Light

Illuminates orange.
Temporarily on, accompanied by the display of a message.

One or more minor failures, for which there is/ are no specific warning light(s), have been detected.
Identify the cause of the failure using the message displayed on the instrument panel.
You may be able to deal with some failures yourself, such as changing the battery in the remote control.

Illuminates orange.
Fixed, accompanied by the display of a message.

One or more major failures, for which there is/ are no specific warning light(s), have been detected.
Identify the cause of the failure using the message displayed on the instrument panel.

Illuminates orange. Fixed, accompanied by the display of the message "Audible Warning System failure: Repair needed ".

The audible warning system is in failure.
The following driving aids may be disturbed or unavailable:

- Road signs recognition.
- Active Safety Brake/Collision Risk Alert.
- Lane keeping assist.
- Driver Attention Warning.

Illuminates orange. Fixed, accompanied by the message Illuminates orange. Fixed, accompanied by the message "Parking brake failure

Automatic release of the electric parking brake is unavailable.

Anti-lock Brake System (ABS) Warning Light

Illuminates orange.
Fixed.

The anti-lock braking system has a failure.
The vehicle retains conventional braking.
Drive carefully at moderate speed.

Electric Park Brake Applied Light

Illuminates orange.
Fixed.

The "automatic application" (on switching off the engine) and "automatic release" (on acceleration) functions are deactivated.
If automatic application/release is no longer possible:

- Start the engine.
- Use the control to apply the electric parking brake.
- Take your foot fully off the brake pedal.
- Hold the control pressed in the release direction for between 10 and 15 seconds.
- Release the control.
- Depress and hold the brake pedal.
- Pull the control in the application direction for 2 seconds.
- Release the control and the brake pedal.

Electric Park Brake Warning Light

Illuminates orange. Fixed, accompanied by the message Parking brake failure.

The vehicle cannot be immobilised with the engine running.
If manual application and release commands are not working, the electric parking brake control is failure.
The automatic functions must be used at all times and are automatically reactivated in the event of a failure with the control.

Fixed, accompanied by the message Parking brake failure.

The electric parking brake is failure: manual and automatic functions may not be working. When stationary, to immobilise the vehicle:

- Pull the electric parking brake control and hold it for approximately 7 to 15 seconds, until the indicator light lights up on the instrument panel.

If this procedure does not work, secure the vehicle:

- Park on a level surface.
- With a manual gearbox, engage a gear.

Active Emergency Braking Warning Light

Illuminates orange.
Flashing.

The system activates and brakes the vehicle momentarily to reduce the speed of collision with the vehicle in front.

Illuminates orange.
Fixed, accompanied by the display of a message.
The system has been deactivated via the touch screen.

Illuminates orange.
Fixed, accompanied by a message and an audible signal.
The system has a failure.

Illuminates o Illuminates or- accompanied by the display of the message "Driving Assistance Sensor blind: Clean sensor, see User Manual".

The sensor is masked.
Stop as soon as it is safe to do so and switch off the ignition.
Clean the front camera.

Illuminates orange.
Fixed.
If these warning lights come on after the engine is switched off and then restarted.

Fixed.
The system is deactivated temporarily because the driver and/or front passenger (depending on version) has been detected as present but the corresponding seat belt has not been fastened.

Electronic Stability Control (ESC) / Traction Control System (TC) Active Warning Light

Illuminates orange.
Flashing.
ESC/TC system regulation is activated in the event of a loss of grip or trajectory.

Illuminates orange.
Fixed.
ESC/TC system has a failure.

Electronic Stability Control (ESC) / Traction Control System (TC) OFF Warning Light

Illuminates orange.
Fixed.

The system is deactivated.

The ESC/TC system is reactivated automatically when the vehicle is restarted, and at speeds above approximately 31 mph (50 km/h).
At speeds below 31 mph (50 km/h), it can be reactivated manually.

Lane Keep Assist (LKA) Warning Light

Illuminates orange.
Flashing.

You are about to cross a broken lane marking without operating the direction indicators.
The system is activated, then corrects the trajectory if it detects a risk of unintentionally crossing a line or hard shoulder (depending on version).

Illuminates orange.
Fixed.
The system has been automatically deactivated or placed on standby.

Illuminates oran Illuminates oranganied by the display of the message "Driving Assistance Sensor blind: Clean sensor, see User Manual".

The sensor is masked.
Stop as soon as it is safe to do so and switch off the ignition.
Clean the front camera.

Service Lane Keep Assist Warning Light

The system has a failure.

Low Fuel Warning Light

Illuminates orange.

Fixed, with the blocks lit flashing, accompanied by an audible signal (with the matrix instrument panel) or Fixed, with the reserve level shown in red, accompanied by an audible signal and the display of a message (except with the matrix instrument panel).

When it first comes on, there are approximately 5 litres of fuel remaining in the tank (reserve).

Until the fuel level is topped up, this alert will be repeated every time the ignition is switched on, with increasing frequency as the fuel level decreases and approaches zero.
Refuel without delay to avoid running out of fuel.

Never drive until completely empty, as this could damage the emissions control and injection systems.

AdBlue® Warning Light

Illuminates orange for around 30 seconds when starting the vehicle, accompanied by a message indicating the driving range.

The driving range is between 1,500 and 500 miles (2,400 and 800 km).
Top up the AdBlue®.

Illuminates orange. Fixed, on switching on the ignition, accompanied by an audible signal and a message indicating the driving range.

The driving range is between 500 and 62 miles (800 and 100 km).
Promptly top up the AdBlue®.

Illuminates orange. Flashing, accompanied by an audible signal and a message indicating the driving range.

The driving range is less than 62 miles (100 km).
You must top up the AdBlue® to avoid engine starting being prevented.

Illuminates orange, flashing, accompanied by an audible signal and a message indicating that starting is prevented.

The AdBlue® tank is empty: the legally required engine immobiliser system prevents the engine from starting.
To restart the engine, top up the AdBlue®.
It is essential to add at least 5 litres of AdBlue® to the tank.

Illuminates orange. Fixed when the ignition is switched on, accompanied by an audible signal and a message.

A malfunction of the SCR (Selective Catalytic Reduction) emissions control system has been detected.
This alert disappears once the exhaust emissions return to normal levels.

Illuminates orange. Flashing AdBlue® warning light on switching on the ignition, with the Service and Engine self-diagnostics warning lights on fixed, accompanied by an audible signal and a message indicating the driving range.
Depending on the message displayed, it is possible to drive for up to 528 miles (850 km) before the engine immobiliser is triggered.

Illuminates orange. Flashing AdBlue® warning light on switching on the ignition, with the Service and Engine self-diagnostics warning lights on fixed, accompanied by an audible signal and a message

indicating that starting is prevented.
The engine immobiliser prevents the engine from restarting (the permitted driving limit has been exceeded after confirmation of a malfunction of the emissions control system).

Engine Check-Malfunction Indicator (MIL) Warning Light

Illuminates orange.
Flashing.

The engine management system has a failure.
There is a risk that the catalytic converter will be destroyed.

Illuminates orange.
Fixed.

The emissions control system has a failure.
The warning light should go off when the engine is started.

Illuminates orange.
Fixed.
A minor engine failure has been detected.

Illuminates orange.
Fixed.
A major engine failure has been detected.

Engine Preheating Warning Light

Illuminates orange.
approximately 30 seconds in severe weather conditions).

When switching on the ignition, if the weather conditions and the engine temperature make it necessary.
Wait until the warning light goes off before starting.
When the warning light goes off, starting will occur immediately if you press and hold:

- the clutch pedal with a manual gearbox.
- the brake pedal with an automatic gearbox.
  If the engine does not start, make the engine starting request again, while keeping your foot on the pedal.

Tire Pressure Monitoring System (TPMS) Warning Light

Illuminates orange.
an audible signal and a message. Temporarily on (up to approximately 30 seconds in severe weather conditions).

The pressure in one or more tires is too low.
Check the pressure of the tires as soon as possible.
Reinitialise the detection system after adjusting the pressure.

Under-inflation warning light flashing then fixed and Service warning light fixed.

The tire pressure monitoring system is failure.
Under-inflation detection is no longer monitored.

Check the tire pressures as soon as possible.

Traffic Sign Recognition (TSR) Warning Light

Illuminates orange.
Temporarily on.

The overspeed alert sound has been deactivated.

Illuminates orange.
Fixed, accompanied by the display of a message and an audible signal.

The system has a failure.

Illuminates orange. Fixed, accompanied by the display of the message "Driving Assistance Sensor blind: Clean sensor, see User Manual ".

The sensor is masked.
Stop as soon as it is safe to do so and switch off the ignition.
Clean the front camera.

Parking sensors Warning Light

Illuminates orange.
Flashing.
The system detects an obstacle.

Illuminates orange.
Fixed, accompanied by the display of a message and an audible signal.
The system has a failure.

Illuminates orange. Fixed, accompanied by the display of the message "Parking Assistance Sensor blind: Clean sensor, see User Manual ".

The sensor is masked.
Stop as soon as it is safe to do so and switch off the ignition.
Clean the front and/or rear sensors.

Tortoise mode Warning Light

Illuminates orange.
Fixed.

The state of charge of the traction battery is critical.
The engine power gradually decreases.
You must put the vehicle on charge.

Pedestrian Horn Warning Light

Illuminates orange.
Fixed.
Horn failure detected.

Water in Fuel Filter Warning Light

Illuminates orange.
Fixed.

The Diesel fuel filter contains water.
Risk of damaging the fuel injection system!

Particle Filter Warning Light

Illuminates orange. Fixed, accompanied by an audible signal and a message about the risk of particle filter blockage.

The particle filter is nearing saturation.
As soon as traffic conditions allow, regenerate the filter by driving at a speed of at least 37 mph (60 km/h), with an engine speed of above 2,500 rpm, until the warning light goes off.

Fixed, accompanied by an audible signal and a message indicating that the additive level in the particle filter is too low.

The low level in the additive tank has been reached.

Transmission Overheated Warning light

Illuminates orange. Steady, accompanied by an audible signal and a message.

Transmission Overheated.
Stop and idle in Park.
Until cool and the alert clears.

Indicates the transmission fluid has exceeded safe temperatures.
Reduced Performance Stop safely.
Shift to Park and keep engine running at idle to cool down.

Green warning and indicator lights

Automatic Low Beam Indicator Light

Illuminates green.
Fixed.
The lights are on.

Hill Assist Descent Control Warning Light

Illuminates green.
Fixed.

The system has been activated, but the conditions for regulation are not met (gradient, speed too high, gear engaged).

Illuminates green.
Flashing.

The function is regulating the speed of the vehicle.
The vehicle is being braked; the brake lights come on during the descent.

Turn Signal Indicator Light

Illuminates green.
Flashing with audible signal.
The direction indicators are on.

Stop-Start Active Indicator Light

Illuminates green.
Fixed.
When the vehicle stops, the Stop & Start system puts the engine into STOP mode.

Illuminates green.
Flashing temporarily.
STOP mode is momentarily unavailable or START mode is automatically triggered.

Ready To Drive Indicator Light

Illuminates green. Fixed, accompanied by an audible signal when it comes on.Flashing temporarily.

The vehicle is ready to drive and the thermal comfort systems are available.
The indicator light goes out upon reaching a speed of approximately 3 mph (5 km/h) and lights up again when the vehicle stops moving.
The light will go out when you switch off the motor and exit the vehicle.

Automatic High Beam Indicator Light

Illuminates green.
Fixed.

The function has been activated via the vehicle's configuration menu.
The lighting control stalk is in the "AUTO" position.

Front Fog Warning Lights

Illuminates green.
Fixed.
The front foglights are on.

Blue warning and indicator lights

High Beam Indicator Light

Illuminates blue.
Fixed.
The lights are on.

Climate Controls

AC On-Off Control

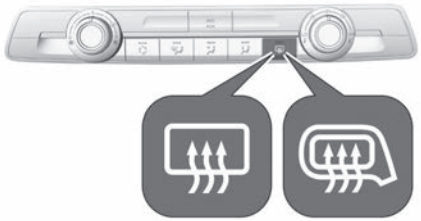

Controls for:

- Temperature;
- Air distribution, , and ;
- Fan speed;
- Cooling A/C;
- Air recirculation;
- Heated rear window or heated exterior mirrors.

Temperature

Adjust the temperature by turning to the desired temperature.

HI: Warm

LO: Cold

Heating will not be fully effective until the engine has reached normal operating temperature.

Air distribution

To front windshield

To head area via adjustable air vents

To foot and windshield

All combinations are possible.

Cooling A/C

Press A/C to switch on cooling. The LED in the button illuminates to indicate activation. Cooling is only functional when the engine is running and fan is switched on.

Press A/C again to switch off cooling.

The air conditioning system cools and dehumidifies (dries) as soon as the outside temperature is slightly above the freezing point. Therefore, condensation may form and drip from under the vehicle.

If no cooling or drying is required, switch off the cooling system for fuel saving reasons.

Maximum AC On-Off Control

Briefly open the windows so that hot air can disperse quickly.

- Switch on cooling A/C;
- Press for air recirculation system on;
- Press for air distribution;
- Set temperature control to coldest level;
- Set fan speed to highest level;
- Open all vents.

Demisting and defrosting the windows

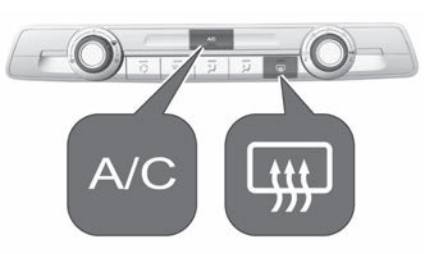

- Set fan speed to highest level.
- Set temperature controller to warmest level.
- Switch on cooling A/C, if required.
- Switch on heated rear window or heated exterior mirrors .
- Switch on heated windshield .
- Open side air vents as required and direct them towards the door windows.

NOTE

If the settings for demisting and defrosting are selected, an Autostop may be inhibited.
If the settings for demisting and defrosting are selected while the engine is in an Autostop, the engine will restart automatically.

Recirculation control

Press to activate air recirculation mode. The LED in the button illuminates to indicate activation.
Press again to deactivate air recirculation mode.

WARNING

The exchange of fresh air is reduced in air recirculation mode.
In operation without cooling, the air humidity increases, so the windows may mist up from inside.
The quality of the passenger compartment air deteriorates, which may cause the occupants to feel drowsy.

In warm and very humid ambient air conditions, the windshield may mist up from outside when cold air is directed towards it. If windshield mists up from outside, activate windshield wiper and deactivate .

Heating and ventilation system

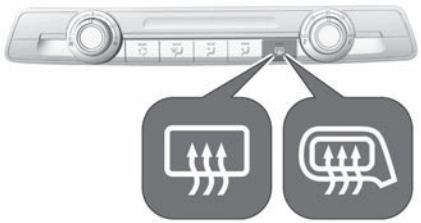

Controls for:

- temperature
- air distribution , , and
- fan speed
- air recirculation
- heated rear window or heated exterior mirrors

Temperature

Adjust the temperature by turning to the desired temperature.
HI: warm

LO: cold
Heating will not be fully effective until the engine has reached normal operating temperature.

Air distribution

To front windshield

To head area via adjustable air vents

To foot and windshield

All combinations are possible.

Fan speed

Adjust the air flow by turning to the desired speed.
clockwise : increase
anticklockwise : decrease

Air recirculation system

Press to activate air recirculation mode. The LED in the button illuminates to indicate activation.
Press again to deactivate air recirculation mode.

⚠ WARNING

The exchange of fresh air is reduced in air recirculation mode.
In operation without cooling, the air humidity increases, so the windows may mist up from inside.
The quality of the passenger compartment air deteriorates, which may cause the occupants to feel drowsy.

In warm and very humid ambient air conditions, the windshield may mist up from outside when cold air is directed towards it. If windshield mists up from outside, activate windshield wiper and deactivate .

Demisting and defrosting

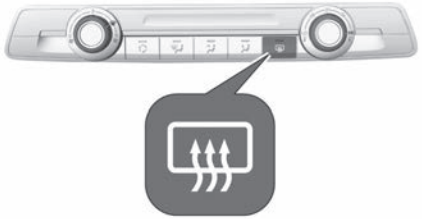

- Press the air distribution is directed towards the windshield.
- Set temperature controller to warmest level.
- Set fan speed to highest level.
- Switch on heated rear window and exterior mirrors or switch on heated exterior mirrors.
- Switch on heated windshield .
- Open side air vents as required and direct them towards the door windows.

Automatic AC control

The dual zone climate control allows different temperatures for driver side and front passenger side.

In automatic mode, temperature, fan speed and air distribution are regulated automatically.

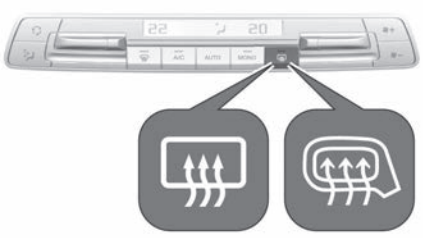

Controls for:

- air recirculation
- air distribution
- rocker switch for adjusting the temperature on driver side and front passenger side

- demisting and defrosting
- cooling A/C
- automatic mode AUTO
- dual zone temperature synchronisation MONO
- heated rear window or heated exterior mirrors
- fan speed +-

Activated functions are indicated by the LED in the respective control.
The electronic climate control system is only fully operational when the engine is running.

Automatic mode AUTO

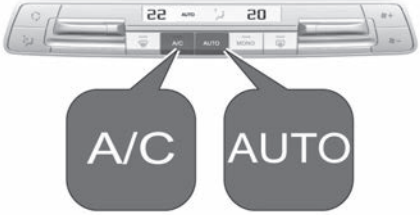

Basic setting for maximum comfort:

- Press AUTO, the air distribution and fan speed are regulated automatically.
- Open all air vents to allow optimised air distribution in automatic mode.
- Air conditioning must be activated for optimal cooling and demisting. Press A/C to switch on air conditioning. The LED in the button indicates activation.
- Set the preselected temperatures for driver and front passenger using the left and right rotary ring. Recommended temperature is 22 °C.

Press successively AUTO to select the desired automatic settings:

- Soft Auto for a soft and silent air distribution.
- Auto for thermal comfort and silent air distribution.
- Auto Fast for a dynamic and efficient air distribution.

Manual settings

Climate control system settings can be changed by activating the following functions:
Fan speed +-

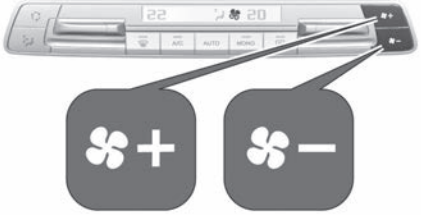

Press + to increase or - to decrease the air flow.

To return to automatic mode, press AUTO.

Air distribution

Press successively until the desired direction of the air distribution is displayed:

: to windshield and front door windows

: to head area and rear seats via adjustable air vents

: to front and rear foot well

: to windscreen and front door windows, to head area and rear seats via adjustable air vents, to front and rear foot well

Combinations of different air distribution options can be select by pressing successively.

To return to automatic air distribution, press AUTO.

Temperature preselection

Set the preselected temperatures separately for the driver and the front passenger to the desired value using the left and right switch for adjusting the temperature.
Recommended temperature is 22 °C.
Temperature is indicated in the display beside the switches for adjusting the temperature.

If the minimum temperature Lo is set, the climate control system runs at maximum cooling, if cooling A/C is switched on.

If the maximum temperature Hi is set, the climate control system runs at maximum heating.

> **NOTE**
>
> If A/C is switched on, reducing the set cabin temperature can cause the engine to restart from an Autostop or inhibit an Autostop.

Dual zone temperature synchronisation MONO

Press MONO to link passenger side temperature setting to the driver side / to remove the linking of the passenger side temperature setting to the driver side. The passenger side temperature setting is linked to the driver side if the LED in the button MONO is not illuminated.

Air conditioning A/C

Press A/C to switch on cooling.

Cooling is only functional when the engine is running and climate control fan is switched on.

Press A/C again to switch off cooling.

The air conditioning system cools and dehumidifies (dries) when outside temperature is above a specific level. Therefore condensation may form and drip from under the vehicle.
If no cooling or drying is required, switch off the cooling system for fuel saving reasons.

Manual air recirculation

Press to activate the air recirculation mode. is shown in the display to indicate activation.
Press again to deactivate recirculation mode.

⚠ WARNING

The exchange of fresh air is reduced in air recirculation mode.
In operation without cooling, the air humidity increases, so the windows may mist up from inside.
The quality of the passenger compartment air deteriorates, which may cause the occupants to feel drowsy.

In warm and very humid ambient air conditions, the windscreen may mist up from outside, when cold air is directed towards it. If windscreen mists up from outside, activate windscreen wiper and deactivate .

Demisting and defrosting the windows

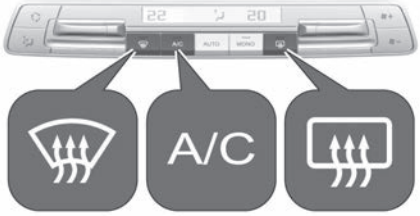

- Press . The LED in the button illuminates to indicate activation.
- Air conditioning and automatic mode are automatically switched on. The LED in the button A/C illuminates, AUTO is shown in the display.
- Temperature and air distribution are set automatically and the fan runs at high speed.
- Switch on heated rear window .
- Switch on heated windshield .
- To return to previous mode, press again.

ⓘ NOTE

If is pressed while the engine is running, an Autostop will be inhibited until is pressed again.
If is pressed while the engine is in an Autostop, the engine will restart automatically.

Deactivation of electronic climate control system

Press - subsequently until the electronic climate control system is deactivated.

Temperature Control

The temperature preconditioning allows to heat the vehicle's interior and to ven-

tilate the vehicle's interior with ambient air.
The temperature preconditioning can be programmed using the Infotainment system.
This function is also available via the MyOpel App.

> **NOTE**
>
> The temperature preconditioning is only activated if the ignition is off and the vehicle is locked.

If the charging level of the high voltage battery is below 30%, the temperature preconditioning is not activated.
When the vehicle is plugged in, battery charging takes precedence over pre-conditioning.
Consequently, it can only be activated if the battery is charged above a threshold fixed at 80%.
If a recurrent heating / ventilation is programmed and two heating / ventilation procedures are carried out without operating the vehicle, the programming is deactivated.

Setting timer

> **NOTE**
>
> Several timers can be programmed and saved. It is recommended to programme temperature preconditioning with the vehicle plugged in, in order to optimise the long-term performance of the high voltage battery.

Navigation system / Multimedia

Press MENU on the climate control panel or touch on the Info Display to open the climate settings.
Touch and then select the preconditioning settings menu.
Select + to define a new timer or touch next to a timer to edit it.
Activate the timer.
To delete a timer, select the desired timer and press at the lower left corner of the screen.

The heating / ventilation procedure starts approx. 45 minutes before the programmed time when the vehicle is plugged in, or 20 minutes before the programmed time when it is not plugged in, and is maintained ten minutes after it.

Air vents

Adjustable air vents

Air vents in the instrument panel

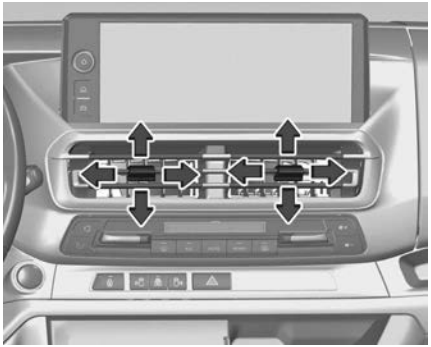

Direct the flow of air by tilting and swivelling the slats.
To close the vent, swivel the slats inwards.

Outer air vents in the instrument panel

Direct the flow of air by tilting and swivelling the slats.
To close the vent, swivel the slats outwards.
At least two air vents must be open while cooling is on.

⚠ WARNING

Do not attach any objects to the slats of the air vents. Risk of damage and injury in case of an accident.

Air vent in the glovebox

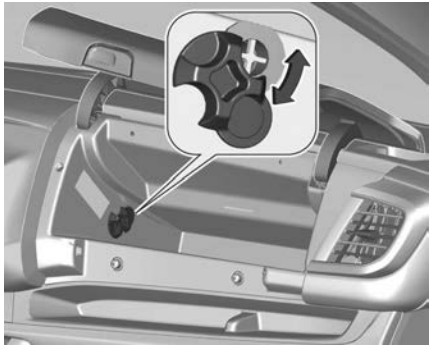

Turn the slider up or down in order to close or open the air vent.

Rear air vents in the ceiling

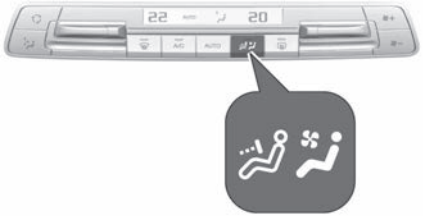

To activate the distribution of climatised / heated air via the rear air vents, press .

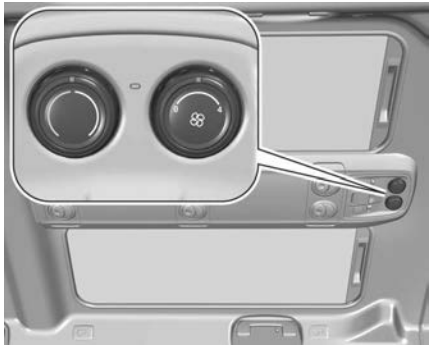

Direct the flow of air by tilting and swivelling the slats.
Adjust the air flow to select the desired speed.

Fixed air vents

Additional air vents are located beneath the windshield, the door windows and in the foot wells.

Additional heating / ventilation system

The additional heating / ventilation system allows to heat and to ventilate the vehicle's interior with ambient air.

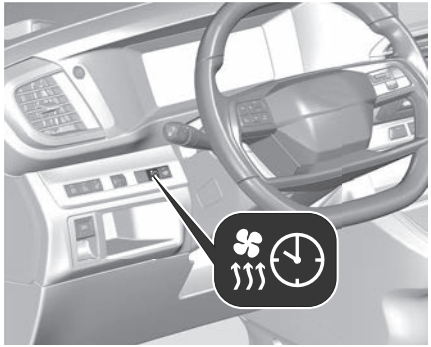

Heating

is lit while the system is programmed or set in operation remotely via the remote control.
It flashes during the whole duration of the heating and goes off at the end of the heating cycle or when stopped using the remote control.

Ventilation

This system allows ventilation of the passenger compartment with exterior air to improve the temperature experienced on entering the vehicle in warm outside condition.

Programming

With Touch Screen & Bluetooth Radio

Activation / deactivation and programming of the temperature conditioning are set via the Touch screen.

With Multimedia system

1. Press to access the applications wall.
2. In the Climate touch screen application, select the Preconditioning tab.
3. Select the Heating or Ventilation page.
4. Press + to add a program.
5. Select the vehicle entry time and the desired days, then press OK.
6. Press ON to activate the program.
7. Press next to a timer to edit it.

⚠ WARNING

Depending on the outside temperature, a certain amount of pre-conditioning time is necessary in order to reach the programmed temperature by the stored activation time.
This pre-conditioning time lasts up to 45 min.

⚠ CAUTION

Allow at least 60 minutes between programming operations.

Long-range remote control

This enables you to switch the heating in the passenger compartment on or off from a distance.
The remote control has a range of about 1 km in open country.

Switch On

Press and hold to start the heating immediately.

The green indicator light on the remote controller briefly turns on to confirm activation.

Switching off

Press and hold OFF to stop the heating immediately.

The red indicator light on the remote controller briefly turns on to confirm deactivation.
The indicator light on the remote control flashes for about 2 seconds if the vehicle has not received the signal.
Change location, then repeat the command.

Changing the battery

If the indicator light of the remote control turns yellow, the charging status of the battery is weak. If the indicator light does not illuminated anymore, the battery is discharged and has to be replaced.

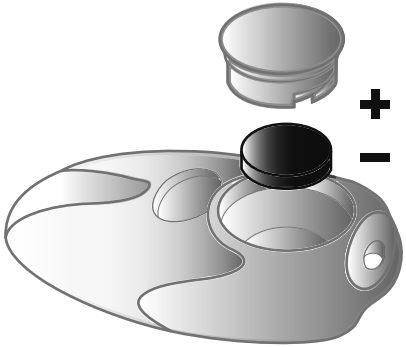

1. Remove the cap of the remote control by unscrewing it with a coin and remove the battery.
2. Replace battery with a battery of the same type. Pay attention to the installation position.
3. Screw the cap in its place .

Do not throw remote control batteries in the trash, as they contain metals that are harmful to the environment. Take them to an approved disposal point.

⚠ WARNING

Programmable heating is supplied by the vehicle fuel tank. Before use, make sure that you have sufficient fuel. If the fuel tank is on reserve, you are strongly recommended not to programme the heating.

The additional heating must always be switched off while refuelling to avoid any risk of fire or explosion.

⚠ WARNING

To avoid the risk of poisoning or asphyxia, the programmable heating must not be used, even for short periods, in a closed environment such as a garage or workshop which is not equipped with an exhaust gas extraction system.

ⓘ NOTE

If the system is switched on using the long-range remote control, the maximum heating duration is around 45 min.

NOTE

The ventilation is activated provided that the battery is sufficiently charged.
The heating is activated provided that:

- the battery charge and the fuel level are sufficient,
- the engine has been started since the previous heating cycle,
- 60 minutes have elapsed between two heating requests.

Display

Instrument cluster

The Driver Information Center is located in the instrument cluster.
Depending on the version, different instrument clusters are available.
In addition to warning lights, gauges and indicators, the following information is available:

- Trip odometer;
- Gear shift indication;
- Service information;
- Vehicle and warning messages;
- Driver assistance messages;
- Pop-up messages;
- Infotainment information.

Type A

Type B

Pages

Press the button to scroll through several on-board pages or to close a pop-up message.
Messages are indicated in the Driver Information Centre, in some cases together with a warning chime.
Press to confirm a message.

Vehicle and service messages

The vehicle messages are displayed as text. Follow the instructions given in the messages.

Messages in the Info Display

Some important messages may appear additionally in the Info Display. Some

messages only pop-up for a few seconds.

Vehicles with navigation system

The vehicle ecognizes low emission zones. An audible message is given when entering or exiting a low emission zone and an icon will be shown on the navigation map.

Info Display

The Info Display can indicate:

- time
- outside temperature
- date
- Infotainment system
- indication of rear view camera
- indication of panoramic view system
- navigation
- vehicle and system messages
- settings for vehicle personalisation

Radio (Infotainment system)

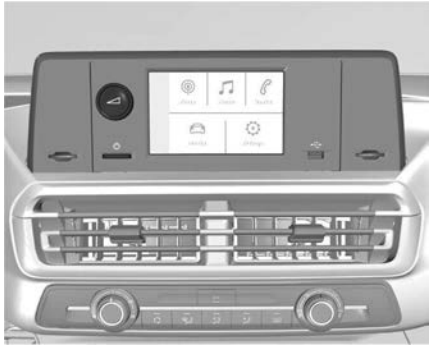

Press ⏻ to switch on the display.
Touch ⚙ to select system settings (units, language, time and date).
Touch 🚗 to select vehicle settings or driving functions.
Confirm a required function or selection by touching.
Touch ⟵ on the display to return to the previous page.

Navigation System / Multimedia

Selecting menus and settings

There are three options to operate the display:

- via buttons beside the display
- by touching the touchscreen with the finger
- via the voice assistant

Button and touch operation

Press ⏻ to switch on the display.
Press ⌂ to display the home screen.
Press 🚗 to select vehicle settings or driving functions.
Touch required menu display icon or a function with the finger.

Confirm a required function or selection by touching.
Touch ⟵ or ╳ on the display to exit a menu without changing a setting.

Personalisation

The Info Display can be personalized via the personalisation menu.

Several pages can be created by choosing widgets to be displayed.

Energy flow

This menu displays the current energy flow within the electric system.
The components will be highlighted when they are active.

1. Press ⌂;
2. Touch ⚡;
3. Select Energy Flow.

Different colors show which engine is used and whether energy is regenerated.

- Green: regenerating energy
- Blue: electric engine operating

INFOTAINMENT SYSTEM

Introduction about Infotainment System

⚠ WARNING

The Infotainment system must be used so that the vehicle can be driven safely at all times. If in doubt, stop the vehicle and operate the Infotainment system while the vehicle is stationary.

Menu

Short press: switch the system on / off or mute the sound.
Long press: switch to standby mode.
Rotate: adjust the volume.

Displays the home screen.

Displays the menu for the driver assistant systems.

Displays the menu for the climate settings.

Displays the audio menu.

Displays the phone menu
Displays the phone projection screen when phone projection is active.

Displays the navigation menu.

Long Press: switch power on / off.
Press: mute / unmute.

Turn: adjust volume / unmute.

Displays the radio menu.

Displays the media menu for external devices.

Displays the phone menu if a mobile phone is connected.
Displays a list of all paired devices if no phone is connected.

USB port for external devices.

Displays the system settings menu.

Displays the vehicle settings menu.

Profiles

Several user profiles can be created. Due to the option of creating profiles, the Infotainment system can be fitted to several drivers. Different settings as well as saved radio stations and destinations will be connected to a specific profile. Thereby, the settings don't need to be adjusted every time another person is driving the vehicle.
To display the profile settings, open the settings app and touch the profile menu.

Creating a profile

To create a new profile, touch +.
The following settings can be adjusted for each profile:

- profile name
- avatar
- associated device

Once a new profile is created, the profile settings can be changed at any time by touching .

Deleting a profile

To delete a profile, touch next to the corresponding profile and select . The guest profile cannot be deleted.
The guest profile is a default profile. It is active when no other profile is created or active.

Updating The System

Software and firmware management and updating are carried out remotely, using the Over the Air technology. This updates the vehicle through a secure connection to the Manufacturer's server (mobile network or Wi-Fi).
Irrespective of a valid subscription to a connected service, the remote management of devices relating to or connected with the security of devices, and the updating of software and firmware, will be carried out when necessary to comply with a legal requirement applicable to the Manufacturer (e.g. The applicable law in terms of product liability, the regulations governing ecall) or when necessary to protect the respective vital interests of the vehicle's users and passengers.
Make sure:

- Stable Internet connection is established via WiFi or mobile network. ⇨ 142
- Privacy settings are not set to Private mode.
- Vehicle is parked on level ground.
- Engine is switched off.
- Ignition is switched on.
- BEV / PHEV: The charging cable has been disconnected for at least four hours.

Automatic Update Download

This function is available when automatic downloads are activated in the Settings app.

The vehicle is checking for updates automatically in the background when the engine is on. When a new software update is available, a message will pop up on the touch screen after the engine is switched off.

NOTE

For this message to appear, the engine must be switched off with the driver's door closed.

Manual Check for Available Updates

1. Open the Settings app on the touch screen.
2. Select the update tab.
3. Select an available update to download by tapping on it.

When the download was successful a confirmation message will popup on the touch screen.
Available updates will be listed on the screen. If no update is shown, wait for five minutes. If there are still no updates shown, no new update is available.

Installation

CAUTION

The engine must be switched off during the installation. Vehicle must remain disconnected from charging cable.

Choose an option:

- Start installation of the update immediately.
- Postpone the installation.

When postponed, the popup message will appear the next time the engine is switched off.
Installation time can take between a few minutes to a maximum of two hours. A popup message will give an estimate of the duration and a description of the update.
The installation of an update will continue even if the vehicle is left and locked. With the next engine start, a message on the screen will inform whether the installation has been finished successfully.
If the installation fails, contact an assistance center via the MyOpel app or a workshop.

Customization

The Driver Information Center and the Info Display can be personalized.

To display the personalisation menu, open the settings application and touch the menu for customization.

Screen color

The background color of the Driver Information Center and the Info Display can be chosen. The chosen background color will immediately be shown in both the Driver Information Center and the Info Display.

Sound ambience

An active sport sound for the sport mode can be activated or deactivated.

Pages

Several personalized pages for the Driver Information Center and the Info Display can be created.

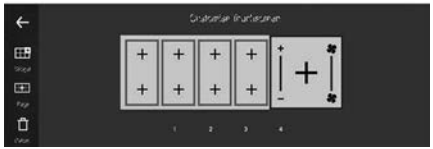

Each page can be personalized by choosing the widgets to be displayed.
To add a page, touch .
To delete a page, drag and drop the respective page to .

Screen operation

The display of the Infotainment system has a touch-sensitive surface that allows direct interaction with the displayed menu controls.

⚠ CAUTION

Do not use pointed or hard items like ballpoint pens, pencils or similar for touch screen operation.

Use the following finger gestures to control the Infotainment system.

Touch

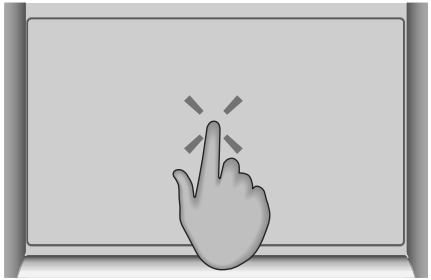

Touch is used to open a menu or select an option.

Touch and hold

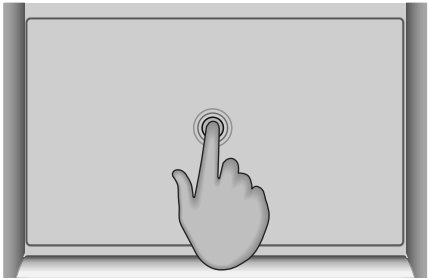

Touch and hold can be used to save radio stations.

Three finger quick access

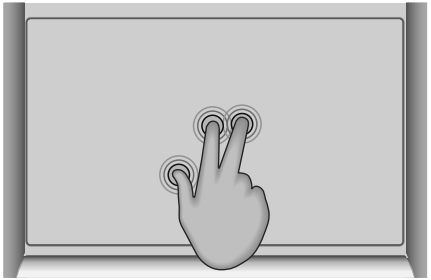

Touch is used to display the apps overview.

Swipe

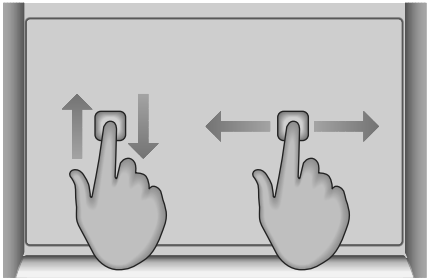

Swipe is used to scroll through a menu or to pan the map.

Returning to the previous screen

To return to the previous screen, touch ⟵ in the upper left corner of the screen.
When ⟵ is touched on the home screen, the audio screen will be displayed.

Returning to the home screen

To return to the home screen, touch ⌂.

Radio

Top bar

The top bar on the screen indicates the following information:

- Time;
- Temperature.

Choosing The Media

Display the audio screen by touching ♫ in the apps overview.
Touch to switch between the radio and a connected external device as the audio source.

Choosing The Radio Frequency

To tune into a specific radio frequency, touch .
A number pad will be displayed. Enter the desired frequency and touch ✓ to confirm.
To select the waveband, touch .

Selecting A Radio Station

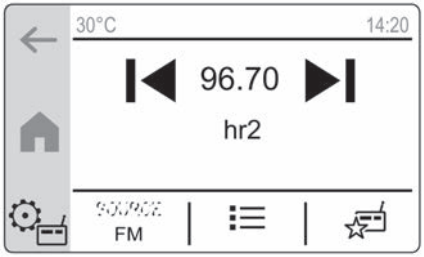

Touch to go to the previous station / song or touch and hold for rewinding.

96.70 Touch to enter a frequency.

Touch to go to the next station / song or touch and hold for fast forwarding.

Adjust the audio settings.

SOURCE Select the audio source.

Display the station list / tracklist.

Display the favorites list.

Sources

Touch SOURCE and select the desired audio source. The currently active audio source will be indicated.

When an external device will be connected, the Infotainment system automatically selects the external device as the audio source. When the external device will be disconnected, the previous audio source will be selected.

Station tuning

To tune into a certain radio station, open the station list .

and touch ABC. All receivable radio stations are sorted by the first letter.

To tune into a specific frequency, touch the frequency indication on the radio main screen. A new screen will be displayed with a number pad. A frequency can be entered.

Station list

To display the station list, touch .
The currently active radio station will be indicated by .

Favorite radio stations will be indicated by ★.
To update the station list, touch ⚙ and select Update list.

Memorizing A Radio Station

Up to 16 radio stations can be saved as favorites. Touch to display the favorites list.
To save the currently active radio station as a favorite, touch and hold the desired row in the favorites list.

Audio Settings

To adjust the audio settings, touch ⚙ on the audio screen and select Audio settings. The following settings can be adjusted:

- Activate / deactivate speed compensated volume
- Activate / deactivate touch tones
- Adjust sound distribution
- Adjust ambience, bass and treble

Activating Traffic Announcements

Traffic announcement is a service of FM radio stations. When traffic programme is activated, the currently playing audio source will be interrupted when an FM radio station is broadcasting traffic news. The audio source will be switched back when the traffic news are over.
Traffic announcements can be activated or deactivated in the radio settings ⚙.

Phone

Not every mobile phone fully supports the phone function. Therefore, deviations from the range of functions described below are possible.

Phone main menu

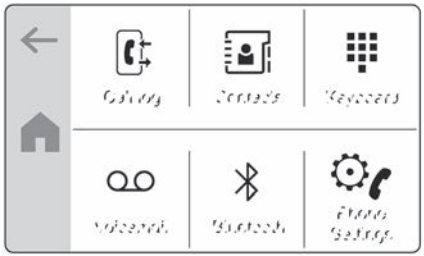

Display the call list.

Display the contact list.

Display the number pad.

Call the answering machine if a voicemail number is set.

Display a list of all paired devices.

Adjust the phone settings.

NOTE

On some mobile phones, access permissions for contact and call lists may have to be set when connecting the mobile phone to the Infotainment system.

Making a phone call

To make a phone call, either choose a contact from the contact list or dial a phone number via the number pad.

Phone settings

To go to the phone settings menu, go to the phone menu and select ⚙.
The following settings are adjustable:

- Putting phone calls automatically on hold.
- Setting a voicemail number.

Pairing a phone

To pair a mobile phone, proceed as follows:

1. Enable Bluetooth on the mobile phone and ensure it is visible for other devices;
2. On the Touch Screen, select Telephone⇨ Manage devices;
3. Touch Add, Mobile phones are being searched;
4. Select the desired mobile phone;
5. Select the Infotainment system from the Bluetooth device list on the mobile phone;
6. Compare and confirm the shown code on the mobile phone and on the Touch Screen. Touch OK on the Touch Screen. Alternatively, a number pad might appear on the Touch Screen. Enter the code that is shown on the mobile phone. Some mobile phones require access to certain phone features, follow the instructions;
7. Determine whether the mobile phone is to be connected for the phone function and music streaming.

Once the mobile phone is successfully paired, it will be connected automatically and shown as connected.
If the mobile phone is connected for the phone function, will be displayed in the list of paired devices.
If the mobile phone is connected for music streaming, ♪ will be displayed in the list of paired devices.

Disconnecting and connecting a mobile phone

1. In the phone menu on the Touch Screen, select Bluetooth;
2. To disconnect the currently connected mobile phone, touch the corresponding mobile phone and select Yes. The mobile phone is disconnected;
3. To connect another paired mobile phone, touch the corresponding mobile phone and select Yes. The mobile phone is connected.

Deleting a paired mobile phone

1. In the phone menu on the Touch Screen, select Bluetooth ⇨ Manage devices;
2. Touch Delete;
3. Select the desired mobile phone;
4. Touch Yes, The mobile phone is deleted.

Speech recognition

The voice pass-thru application of the Infotainment system allows access to the speech recognition commands on a smartphone. See the smartphone manufacturer's operating instructions to find out whether the smartphone supports this feature.
In order to use the voice pass-thru application, the smartphone must be connected via Bluetooth.

Activating speech recognition

Press and hold on the steering wheel until a speech recognition session is started.

Adjusting the volume of voice prompts

Turn ⏻ on the control panel or press the volume button on the steering wheel upwards (increase volume) + or downwards (decrease volume) −.

Deactivating speech recognition

Press ☎ on the steering wheel. The speech recognition session is ended.

External devices

A USB port for the connection of external devices is located next to the Info Display.
When an external audio source (via USB or Bluetooth) is connected and selected as audio source, the following symbols will be displayed on the audio screen:

Interrupt playback.

Resume playback.

Display the tracklist.

Display the library (folders, artists, albums, playlists, songs).

In the library 🔍, the tracks can be sorted by artist, album etc.
When a folder is selected in the library 🔍, only the tracks of the corresponding folder are displayed in the tracklist ☰.
The following playback functions can be activated in the media settings ⚙:

Repeat	Repeat the tracks of the current list.
Shuffle	Play tracks in random order.

Settings

To display the system settings menu, go to the home screen and select ⚙.
The following sub menus are available:

- Display: Adjust the display brightness and the text scrolling or turn the screen off.
- Date/Time: Adjust the date and the time.
- System: Adjust the privacy settings for data sharing and vehicle position, reset the system to the factory settings, adjust the units and see the system information.
- Languages: Change the system language.
- Bluetooth: Display a list of all paired devices.
- Audio: Activate / deactivate speed compensated volume and touch tones and adjust sound distribution, ambience, bass and treble.

Multimedia System

General Information

Status bar

The status bar is the top bar on the screen. It can indicate the following:

- Time;
- Outside temperature;
- Wi-Fi connection status;
- Bluetooth activation;
- Mobile reception;
- Activated functions, e.g. A/C.

Steering Wheel Controls

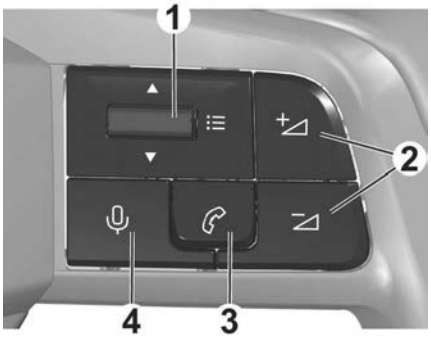

1 Toggle up or down: select the previous / next radio station or track or browse through the list of recent calls.
Short press: display a menu or validate a selection.

2 Short press: adjust the volume or unmute the sound.
Long press on : mute the sound.

3 Short press: accept an incoming call, hang up, display the list of recent calls or display the phone projection screen.
Long press: refuse an incoming call.

4 Short press: activate the voice assistant of the Infotainment system.
Long press: activate the voice assistant of the connected mobile phone

Applications

To display a list of all available apps, touch .
Alternatively, the apps overview will be displayed by a 3-finger touch on the screen.

Voice Commands

NOTE

The answers provided by the voice recognition system may be generated by artificial intelligence.

Press and hold on the steering wheel and say the corresponding activation voice command of the smartphone's voice assistant to use the voice assistant of the smartphone via the Infotainment system.

Speech recognition

The integrated speech recognition can be used to operate the Infotainment system via voice commands.
There are three ways to activate the speech recognition:

- Press on the steering wheel
- Touch in the Info Display
- Say "Hey Opel"

After pressing on the steering wheel or touching in the Info Display, wait for the beep before saying a voice command.
To display some voice command examples, open the help menu in the Info Display. The examples will be sorted by categories, e.g. radio or navigation.

Navigation

Touch in the Info Display to open the navigation app.

Starting a route guidance

To start a route guidance, touch to enter an address via a keyboard.
After typing the first letters of the address, matching addresses will be displayed.
Once the address is entered, several routes might be displayed on the map. Choose one before starting the route guidance.

Active route guidance

During an active route guidance, information about the route, e.g. the estimated arrival time and the distance, will be displayed on the screen.
To activate or deactivate voice prompts of the route guidance, touch .
To change the route, add a stop, e.g. a restaurant or a petrol station, or to show instructions, touch the three points on the side bar of the screen.

Route settings

To open the settings menu, touch the three points on the side bar of the screen and then touch the settings menu .
Touch to view map downloads, to set the map colour, to set the points of interest shown on the map and other map settings, to set the arrival information, to set the side bar on the route guidance screen, to set the map orientation or to show the vehicle range on the map.
Touch to set the options for rerouting, to set the preferred route types (fast, short, eco-friendly) or to avoid specific routes (toll roads, unpaved roads, etc.).
Touch to set the types of voice prompts, alerts and sounds.
Touch to set the privacy information (keep journey history, frequent destinations, etc.).

Map updates

When connected services are activated, the map of the current region will be updated automatically.
When the system is connected to a Wi-Fi network, the maps of all other regions can be updated via the maps and display menu within the settings menu .

Connectivity

To display the connectivity menu, open the settings app and touch the menu for connectivity.
The following settings are adjustable:

- wireless devices: display all paired devices, connect or disconnect a device, choose the connection preferences for each device (Bluetooth or phone projection) and search for nearby devices
- Wi-Fi networks: activate or deactivate Wi-Fi, search for nearby Wi-Fi networks and connect the system to a Wi-Fi network
- privacy settings: activate or deactivate data and location sharing for authorised services

Bluetooth connection

Touch in the Touch Screen to open the phone app.
Once a mobile phone is connected to the Infotainment system via Bluetooth, the following functions are available via the phone app:

- display the contact list

- display a list of the recent calls
- dial a telephone number via a keyboard

Screen Mirroring

The phone projection applications Apple CarPlay and Android Auto display selected apps from a smartphone on the Touch Screen and allow their operation directly via the Infotainment controls.
Check with the device's manufacturer if this function is compatible with the smartphone and if this application is available in the country you are in.

Preparing the smartphone

iPhone®: Make sure Siri® is activated on your phone.
Android phone: Download the Android Auto app to your phone from the Google Play™ Store.

Connecting the smartphone

Connect the phone to the USB port or connect the phone via Bluetooth.
Make sure phone projection is activated in the connectivity settings.

Starting phone projection

Touch the Apple CarPlay or Android Auto app on the Touch Screen.
The phone projection screen displayed depends on the smartphone and software version.

Phone

Pairing a mobile phone

To pair a mobile phone, open the settings menu in the phone app in the Touch Screen.
Open the Bluetooth menu on the mobile phone and activate the function.
Select the mobile phone from the list in the Touch Screen. Follow the instructions on the mobile phone.
Once the mobile phone is successfully paired, it will be connected automatically and shown as connected.
Also a second mobile phone can be connnected via the settings menu in the phone app.

Making a call

To make a call, choose one of the contacts from the contact list, dial a telephone number via the keyboard or select a number from the recent calls list.

Receiving a call

An incoming call is announced by a ring and a message on the Touch Screen.
To accept an incoming call or hang up an active call, touch the corresponding button on the Touch Screen or press on the steering wheel.
To refuse an incoming call, touch the corresponding button on the Touch Screen or press and hold 6 on the steering wheel.

Settings

To display the system settings menu, open the settings app and touch the menu for the system settings.

The following system settings can be adjusted:

- language
- date and time, time format, date format
- unit for distance and consumption
- unit for outside temperature

- restore the factory settings
- view system information

Audio settings

In the settings menu within the radio app, the following settings can be adjusted:

- sound settings: ambience sound, equaliser, balance
- radio settings: station list order, activation or deactivation of station follow-up and traffic and news announcements
- volume settings: system voice, ringtone, phone call, system sounds, navigation warnings

Brightness

To adjust the brightness of the instrument panel illumination and the interior lighting, open the settings app and touch the menu for the brightness adjustment.
The interior lighting can also be activated or deactivated.

Privacy

The privacy settings can be set via the connectivity menu within the settings app . Alternatively, the privacy settings can be set via the status bar by touching .
The privacy settings can be set for each profile. The following privacy settings can be set:

- share data and location
- share data
- private mode

To use all available connected services without restrictions, it is necessary to share data and location.
When the private mode is activated, connected services will only perform local processing inside the vehicle with limited functions.

Connected services

To display the menu for connected services, open the settings app and touch the corresponding menu entry.

STARTING & OPERATING

Starting And Stopping The Engine

Starting the Engine

Vehicles with ignition switch

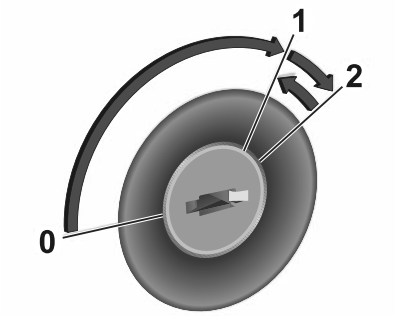

1. Turn key to position 1 to release the steering wheel lock.
   a. Manual transmission

      Operate clutch and brake pedal.
   b. Automatic transmission

      Operate brake pedal and move selector lever to P or N.
      Do not operate accelerator pedal.

      Diesel engines: wait until control indicator extinguishes.
2. Turn key briefly to position 2 and release after engine has been started.
   a. Manual transmission

      During an Autostop (Stop & Start), the engine can be started by depressing the clutch pedal.
   b. Automatic transmission

      During an Autostop (Stop & Start), the engine can be started by releasing the brake pedal.

Vehicles with power button

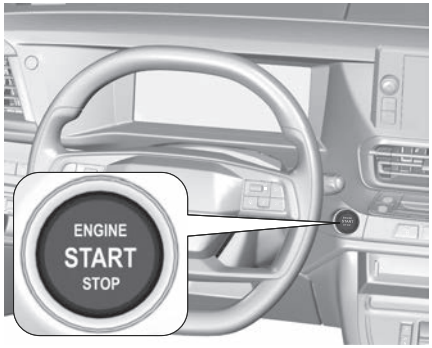

- Manual transmission: operate clutch and brake pedal.
- Automatic transmission: operate brake pedal and move selector lever to P or N.
- Do not operate accelerator pedal.
- Press Start/Stop button.
- Release button after starting procedure begins. Diesel engine starts after control indicator for preheating extinguishes.

- Before restarting or to switch off the engine when vehicle is stationary, press Start/Stop once more briefly.

To start the engine during an Autostop:

- Manual transmission: during an Autostop, the engine can be started by depressing the clutch pedal.
- Automatic transmission: during an Autostop, the engine can be started by releasing the brake pedal.

Operation in Case of Failure

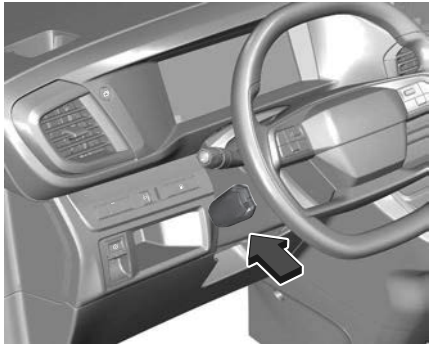

Hold the electronic key with buttons outside at the marking on the steering column cover as shown in the illustration.

On vehicles with Manual transmission:

1. Select neutral gear;
2. Press and hold the clutch and brake pedals;
3. Press the Engine Start/Stop button.

On vehicles with Automatic transmission:

1. Move the selector to position P;
2. Press and hold the brake pedal;
3. Press the Engine Start/Stop button.

Emergency shut off during driving

If the engine needs to be switched off during driving in case of emergency, press Start/Stop for five seconds.

⚠ DANGER

Switching off the engine during driving may cause loss of power support for brake and steering systems. Assistance systems and airbag systems are disabled.
Lighting and brake lights will extinguish. Therefore power down the engine and ignition while driving only when required in case of emergency.

Starting the vehicle at low temperatures

Starting the engine without additional heaters is possible down to -25 °C for diesel engines and -30 °C for petrol engines. Required is an engine oil with the correct viscosity, the correct fuel, performed services and a sufficiently charged vehicle battery.

With temperatures below -30 °C the automatic transmission requires a warming phase of approx. five minutes. The selector lever must be in position P.

Turbo engine warm-up

Upon start-up, engine available torque may be limited for a short time, especially when the engine temperature is cold. The limitation is to allow the lubrication system to fully protect the engine.

Steering Wheel Lock

Depending on version, the vehicle may be equipped with a steering wheel lock. In this case, remove key from ignition switch and turn steering wheel until it engages.

⚠ WARNING

Never remove the key from ignition switch during driving as this will cause, depending on version, steering wheel lock.

⚠ WARNING

If the vehicle battery is discharged, the vehicle must not be towed or tow-started as the steering wheel lock cannot be disengaged.

⚠ WARNING

In the event of a malfunction of the key battery, the steering wheel lock remains engaged. Do not try to start the vehicle by pushing it and do not tow it.

Stop & Start Automatic Function

Stop & start system

The stop & start system helps to save fuel and to reduce the exhaust emissions. When conditions allow, it switches off the engine as soon as the vehicle is at a low speed or at a standstill, e.g. at a traffic light or in a traffic jam.

Activation

The stop & start system is available as soon as the engine is started, the vehicle starts-off and the conditions as stated below in this section are fulfilled. The system can be activated in the vehicle personalisation. If the stop & start system is temporarily not available, the control indicator Ⓐ flashes for a few seconds.

Deactivation

The stop & start system can be deactivated in the vehicle personalisation.
If the system is deactivated during an Autostop, the engine restarts immediately.

Autostop

Vehicles with manual transmission

An Autostop can be activated at a standstill or at a speed below 20 km/h. Activate an Autostop as follows:

- Depress the clutch pedal.
- Set the selector lever to neutral.
- Release the clutch pedal.

The engine will be switched off while the ignition stays on.

Vehicles with automatic transmission

If the vehicle is at a standstill with depressed brake pedal or gear selector in N, Autostop is activated automatically.

In case of vehicles with automatic transmission of type B, an Autostop can also be activated at a speed below 20 km/h.
The engine will be switched off while the ignition stays on.

Indication

An Autostop is indicated by control indicator.
During an Autostop, the heating and brake performance will be maintained.

Conditions for an Autostop

The stop & start system checks if each of the following conditions is fulfilled.

- The stop & start system is not manually deactivated;
- The driver's door is closed or the driver's seat belt is fastened;

- The sliding doors are closed;
- The vehicle battery is sufficiently charged and in good condition;
- The engine is warmed up;
- The ambient temperature is between too high or too low;
- The engine coolant temperature is not too high;
- The engine exhaust temperature is not too high, e.g. after driving with high engine load:
- The climate control system allows an Autostop;
- The brake vacuum is sufficient;
- The self-cleaning function of the exhaust filter is not active;
- The vehicle was driven at least at walking speed since the last Autostop.

Otherwise an Autostop will be inhibited.

> **NOTE**
>
> The Autostop may be inhibited for several hours after a battery replacement or reconnection.

Certain settings of the climate control system may inhibit an Autostop.

Immediately after higher speed driving an Autostop may be inhibited.

Vehicle battery discharge protection

To ensure reliable engine restarts, several vehicle battery discharge protection features are implemented as part of the stop & start system.

Power saving measures

During an Autostop, several electrical features such as auxiliary electric heater or rear window heating are disabled or switched to a power saving mode. The fan speed of the climate control system is reduced to save power.

Restart of the engine by the driver

Vehicles with manual transmission

Depress the clutch pedal without depressing the brake pedal to restart the engine.

Vehicles with automatic transmission

Type A: The engine is restarted if

- the gear selector is in position D with M activated or not and the brake pedal is released
- the gear selector is in position N, the brake pedal is released and the gear selector is moved to position D with M activated or not
- the gear selector is in position P, the brake pedal is depressed and the gear selector is moved to position R, N or D with M activated or not
- the reverse gear is engaged

Type B: The engine is restarted if

- the gear selector is in position D or M and the brake pedal is released
- the gear selector is in position N, the brake pedal is depressed and and the gear selector is moved to D or M
- the reverse gear is engaged

Restart of the engine by the stop & start system

The selector lever must be in neutral to enable an automatic restart.
If one of the following conditions occurs during an Autostop, the engine will be restarted automatically by the stop & start system:

- depending on engine, vehicle speed exceeding 3 km/h or 25 km/h (manual transmission)
- vehicle speed exceeding 3 km/h (automatic transmission)

- stop-start system manually deactivated
- driver's door opened
- sliding door opened
- driver's seat belt unfastened
- engine temperature too low
- charging level of vehicle battery below defined level
- brake vacuum not sufficient
- vehicle driven at least at walking speed
- climate control system requests engine start
- air conditioning manually switched on

If an electrical accessory, e.g. a portable CD player, is connected to the power outlet, a brief power drop during the restart might be noticeable.

Brakes

The brake system comprises two independent brake circuits.
If a brake circuit fails, the vehicle can still be braked using the other brake circuit. However, braking effect is achieved only when the brake pedal is depressed firmly. Considerably more force is needed for this. The braking distance is extended. Seek the assistance of a workshop before continuing the journey.
When the engine is not running, the support of the brake servo unit disappears once the brake pedal has been depressed once or twice.
Braking effect is not reduced, but braking requires significantly greater force. It is especially important to bear this in mind when being towed.

Parking Brake

⚠ WARNING

Before leaving the vehicle, make sure the parking brake is applied. Control indicator (P) illuminates constantly when parking brake is applied.

Manual parking brake

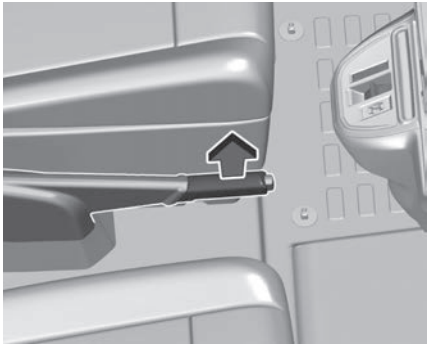

⚠ WARNING

Always apply parking brake firmly without operating the release button, and apply as firmly as possible on a downhill or uphill slope. To release the parking brake, pull the lever up slightly, press the release button and fully lower the lever. To reduce the operating forces of the parking brake, depress the foot brake at the same time.

Electric parking brake

Applying when vehicle is stationary

⚠ WARNING

Pull switch (Ⓟ) for a minimum of one second until control indicator (Ⓟ) illuminates constantly and electric parking brake is applied. The electric parking brake operates automatically with adequate force. Before leaving the vehicle, check the electric parking brake status.

The electric parking brake can always be activated, even if the ignition is off. Do not operate electric parking brake system too often without engine running as this will discharge the vehicle battery.

Releasing

Switch on ignition. Keep brake pedal depressed and then push switch (Ⓟ).

Drive away function

Vehicles with manual transmission: Depressing the clutch pedal and then slightly releasing the clutch pedal and slightly depressing the accelerator pedal releases the electric parking brake automatically. This is only possible if the automatic operation of the electric parking brake is activated. It is not possible when switch (Ⓟ) is pulled at the same time.
Vehicles with automatic transmission: Engaging R, D or M and then depressing the accelerator pedal releases the electric parking brake automatically. This is only possible if the automatic operation of the electric parking brake is activated. It is not possible when switch (Ⓟ) is pulled at the same time.
Electric vehicles: Selecting R, D or B and then depressing the accelerator pedal releases the electric parking brake automatically. This is only possible if the automatic operation of the electric parking brake is activated. It is not possible when switch (Ⓟ) pulled at the same time.

Braking when vehicle is moving

When the vehicle is moving and the switch (Ⓟ) is kept pulled, the electric parking brake system will decelerate the vehicle. As soon as the switch (Ⓟ) is released, braking will be stopped. The antilock brake system and the Electronic Stability Control stabilise the vehicle while the switch (Ⓟ) is kept pulled. If an error of the electric parking brake occurs, a warning message is displayed in the driver information centre. If the antilock brake system and the Electronic Stability Control fail, one or both indicators (ABS) and 🚗 illuminate in the instrument cluster. In this case, stability can only be provided by repeatedly pulling and pushing the switch (Ⓟ) until the vehicle is immobilised.

Automatic operation

Automatic operation includes automatic application and automatic release of the electric parking brake.
The electric parking brake can also be applied or released manually by using the switch (Ⓟ).

Automatic application:

- The electric parking brake is automatically applied when the vehicle is stationary and the ignition is switched off.
- (Ⓟ) illuminates in the instrument cluster and a display message pops up to confirm the application.

Automatic release:

- Parking brake releases automatically after moving off.
- (Ⓟ) extinguishes in the instrument cluster and a display message pops up to confirm the release.

If the vehicle is equipped with an automatic transmission and the brake is not released automatically, make sure the front doors are properly closed.

Deactivation of the automatic operation

In certain situations such as very cold weather or when being towed, it is necessary to deactivate the automatic operation of the electric parking brake.

1. Start the engine;
2. If the parking brake is released, apply the parking brake pulling the switch (Ⓟ);
3. Take your foot off the brake pedal;
4. Press the switch (Ⓟ) for at least ten seconds and maximum 15 seconds;
5. Release the switch (Ⓟ);
6. Depress the brake pedal and keep it depressed;
7. Pull the switch (Ⓟ) for two seconds.

The deactivation of the automatic operation of the electric parking brake is confirmed by (Ⓟ) AUTO OFF illuminating in the Instrument Cluster. The electric parking brake can only be applied and released manually.
To reactivate the automatic operation, repeat the steps described above.

⚠ WARNING

- Do not park the vehicle on an easily ignitable surface. The high temperature of the exhaust system could ignite the surface.
- Apply the parking brake.
- If the vehicle is on a level surface or uphill slope, engage first gear or set the selector lever to position P (automatic transmission type A) / N (automatic transmission type B). On an uphill slope, turn the front wheels away from the kerb.
- If the vehicle is on a downhill slope, engage reverse gear or set the selector lever to position P (automatic transmission type A) / N (automatic transmission type B). Turn the front wheels towards the kerb.
- Close the windows.
- Switch off the engine.
- Remove the ignition key from the ignition switch or switch off ignition on vehicles with power button. Turn the steering wheel until the steering wheel lock is felt to engage.

Functionality check

When the vehicle is not moving, the electric parking brake might be applied automatically. This is done to check the system.

Fault

Failure mode of electric parking brake is indicated by a control indicator (Ⓟ) and by a vehicle message which is displayed in the Driver Information Centre. Control indicator (Ⓟ) flashes: electric parking brake is not fully applied or re-

leased. When continuously flashing, release electric parking brake and retry applying.

Regenerative braking

⚠ WARNING

In the case of extreme temperatures or if the high-voltage battery is almost fully charged, the brake force of the regenerative braking may be temporarily reduced. If the braking force is not sufficient, the driver has to be prepared to use the brake pedal.

⚠ WARNING

Depending on the engine braking force the brake lights are illuminated.

Regenerative braking generates electrical energy resulting from engine braking to charge the high voltage battery.

Transmission

Manual transmission

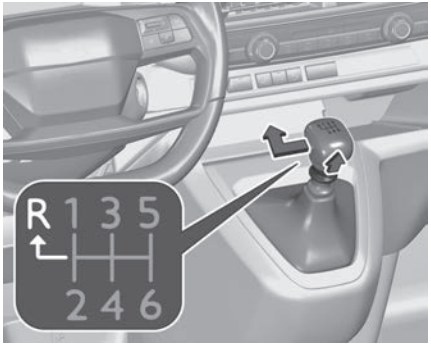

To engage reverse gear:

1. Depress the clutch pedal;
2. Pull up the ring under the gear lever;
3. Engage the reverse gear.

If the gear does not engage, set the selector lever to neutral, release the clutch pedal and depress again. Then repeat gear selection.
Do not slip the clutch unnecessarily. When operating, depress the clutch pedal completely. Do not use the pedal as a foot rest.

When clutch slip is detected for a specific time, the engine power will be reduced. A warning is displayed in the Driver Information Center. Release the clutch.

⚠ CAUTION

It is not advisable to drive with the hand resting on the selector lever.

Automatic transmission

The automatic transmission permits automatic gear shifting (automatic mode).

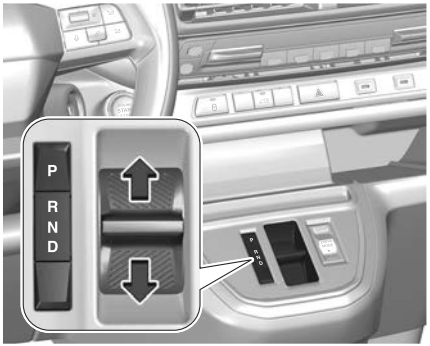

The drive selector is a pulse selector to engage the different positions R, N, D, along with two push-buttons to acti-

vate P. Moving the selector beyond the resistance point skips neutral mode N. The selected mode is confirmed on the cluster and by the illumination of the corresponding light on the Drive Selector.
When D or R is engaged, the vehicle slowly begins to creep when the brake is released.

⚠ CAUTION

Never depress the accelerator pedal and brake pedal at the same time.

P Park mode

R Reverse mode

N Neutral mode

D Drive (automatic) mode

Park mode (P) ⇨ 155

Reverse mode (R)

To engage or disengage R, the vehicle must be at standstill and the brake pedal has to be depressed.

⚠ CAUTION

Engaging R while the vehicle is moving forward could damage the automatic transmission. Only select R after the vehicle has been stopped.

Neutral mode (N)

In this mode, the propulsion system does not transfer torque to the wheels.

Automatic mode (D)

This mode is for normal driving.

ⓘ NOTE

In slippery conditions, operate the vehicle in D for enhanced riding and handling performance.

Kickdown

Pressing down the accelerator pedal beyond the kickdown detent will lead to maximum acceleration when driving in D. The transmission shifts to a lower gear depending on engine speed.

Gear shift indication

The symbol ▲ or ▼ with a number beside it is indicated when gearshifting is recommended for fuel saving reasons.Shift indication appears only in manual mode.

Fault

In the event of a fault, 🔧 illuminates a message is displayed in the Instrument cluster.
Automatic transmission control enables only third gear. The transmission no longer shifts automatically.
Do not drive faster than 100 km/h.
Contact a workshop.

Drive Selector (BEV)

The vehicle uses an electric drive unit with a 1-gear transmission.

⚠ CAUTION

If the vehicle seems to accelerate slowly or not respond when you try to go faster, do not continue your journey. The drive selector could be damaged. Consult a workshop as soon as possible.

⚠ CAUTION

Spinning the tires or holding the vehicle in one place on a hill using only the accelerator pedal may damage the drive selector. If you are stuck, do not spin the tires. When stopping on a hill, use the brakes to hold the vehicle in place.

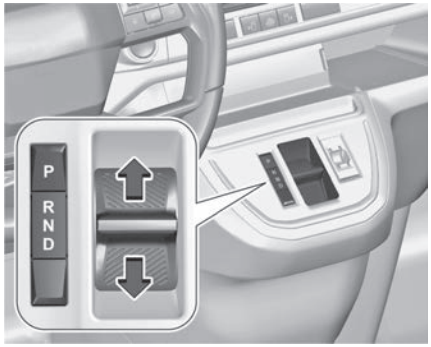

The drive selector is a pulse selector to engage the different positions R, N, D, along with two push-buttons to activate P. Moving the selector beyond the resistance point skips neutral mode N. The selected mode is confirmed on the cluster and by the illumination of the corresponding light on the Drive Selector.
When D or R is engaged, the vehicle slowly begins to creep when the brake is released.

⚠ CAUTION

Never depress the accelerator pedal and brake pedal at the same time.

P Park mode

R Reverse mode

N Neutral mode

D Drive (automatic) mode

Park mode (P) ⇨ 155

Reverse mode (R)

To engage or disengage R, the vehicle must be at standstill and the brake pedal has to be depressed.

Neutral mode (N)

In this mode, the propulsion system does not transfer torque to the wheels.

Automatic mode (D)

This mode is for normal driving.

Regenerative braking with one-pedal driving (BEV)

⚠ WARNING

In the case of extreme temperatures or if the high-voltage battery is almost fully charged, the brake force of the regenerative braking may be temporarily reduced. If the braking force is not sufficient, the driver has to be prepared to use the brake pedal.

Vehicle speed is significantly reduced by releasing the accelerator pedal, without operating the brake pedal.

Three levels of regenerative braking can be selected using the steering wheel paddles:

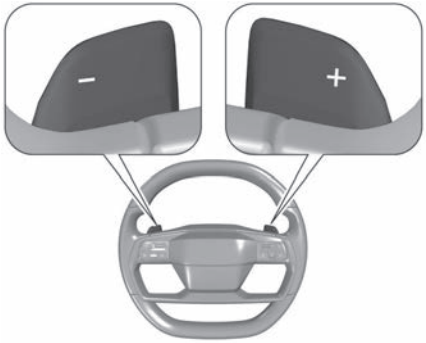

- Pull the left paddle (-) to increase braking force
- Pull the right paddle (+) to decrease braking force

Use the maximum braking level when driving:

- Down steep hills
- In deep snow
- On muddy surfaces
- In stop-and-go traffic

The selected braking level is retained when the ignition is switched off.

The current level is indicated by one to three triangle segments on the cluster.

Park mode (P)

To engage Park mode, press the P button when the vehicle is stationary.

In position P, the front wheels are mechanically locked.

To disengage P, press the brake pedal and select the desired driving mode. P is automatically engaged when:

- The ignition is switched off;
- The driver's door is opened while the vehicle is moving below 5 km/h;
- N mode (Neutral) has been selected for an extended period.

Free Wheeling

In certain situations, e.g., in an automatic car wash etc., it is necessary that the wheels can move freely when the engine is switched off.
To enable free wheeling, the vehicle has to be stationary, the engine has to be running and the driver's door has to be closed.

ICE, BEV

1. Depress the brake pedal and select N.
2. Within five seconds, depress and hold the brake pedal, switch off ignition (on vehicles equipped with power button: press and hold the power button) and move the selector forwards or backwards.
3. Release the brake pedal and switch on ignition.
4. Depress and hold the brake pedal and push the switch (Ⓟ).
5. Release the brake pedal and switch off ignition.

Once the Free Wheeling mode is activated:

- A message appears on the Instrument cluster indicating the remaining activation time;
- A warning beep is emitted every minute during the countdown;

- The mode remains active for 15 minutes (with ignition ON or OFF).
- During this period, the P and N indicators remain illuminated on the selector display (one may flash).
- After 15 minutes, the transmission automatically re-engages position P without additional warning.

To revert to normal operation, depress the brake pedal, switch on the engine and select P.

To revert to normal operation on vehicles equipped with an electronic key, switch the ignition on and then switch the ignition off again, without depressing the brake pedal.

Driving Modes

Driving Mode Selector

Depending on the vehicle type, the following Drive Modes are available:

ICE, BEV

- Normal mode
- Power mode
- Eco mode

Each drive mode corresponds to a different vehicle setting.

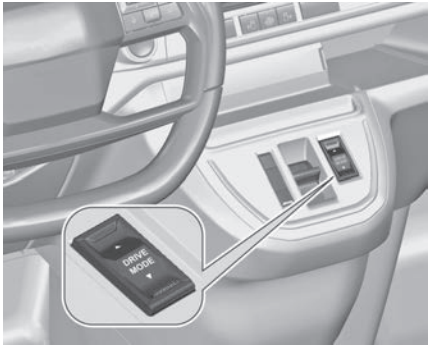

To select the respective drive mode, use the shown toggle switch. Drive modes can also be selected on the menu page will open on the Info Display when the toggle switch has been operated.

Normal

Normal mode settings are preset by default and are automatically selected each time the ignition is switched on. This mode provides a balanced compromise between performance and fuel consumption/range.

Power

Power mode delivers maximum vehicle performance by enhancing responsiveness and providing the highest available power output.
This mode is recommended when:

- The vehicle is fully loaded or with heavy load towing;
- During downhill driving, slope sensitivity is activated to increase engine braking.

Eco

Optimizes vehicle operation to reduce fuel consumption. This mode adjusts engine response and limits the performance of certain systems, such as heating and air conditioning, to improve overall efficiency.

BEV: To optimize range, electric engine power output and heating are reduced.

If the charging level of the high voltage battery falls below 35%, the system switches to limited power mode. Acceleration and maximum speed are then limited.

Traction modes

⚠ CAUTION

The vehicle is designed to drive principally on-road, but it also enables driving off-road occasionally. However, do not drive on terrain where the vehicle could be damaged due to obstacles, such as stones among others and on terrain with steep inclines and poor grip. Do not cross waters.

⚠ CAUTION

When driving off-road, sudden motion and manoeuvres can cause a collision or losing control.

⚠ CAUTION

When selecting a traction mode, ensure to select only the mode appropriate for the terrain you are driving on.

Traction modes designed to optimise traction in low-grip conditions (snow, mud and sand).

Traction modes allow to choose between three modes by the toggle switch:

Snow mode

Mud mode

Sand mode

Snow mode

This mode optimises wheel spin to guarantee the best acceleration based on the available traction.
This mode is active up to a speed of 80 km/h.

Mud mode

This mode allows considerable wheel spin at start-up for the wheel with the least grip, this removes mud and reestablishes traction.
Simultaneously, the wheel with the most grip is provided with the most torque possible.

When advancing, the system optimises and allows the usage of a higher wheel spin to enable more propulsion.
This mode is active up to a speed of 60 km/h.

Sand mode

At start-up, this mode allows a small amount of simultaneous wheel spin on the two drive wheels, enabling the vehicle to advance and reduce the risk of sinking.
When advancing, the system allows the usage of a higher wheel spin to enable more propulsion.
This mode is active up to a speed of 60 km/h.

Engine exhaust

⚠ DANGER

Engine exhaust gases contain poisonous carbon monoxide, which is colourless and odourless and could be fatal if inhaled.
If exhaust gases enter the interior of the vehicle, open the windows.
Have the cause of the fault rectified by a workshop.

Avoid driving with an open load compartment, otherwise exhaust gases could enter the vehicle.

Exhaust filter

Automatic cleaning process

The exhaust filter system filters soot particles out of the exhaust gases.
The start of saturation of the exhaust filter is indicated by the temporary illumination of or , accompanied by a message in the Driver Information Centre and a chime.
As soon as the traffic conditions permit, regenerate the filter by driving at a vehicle speed of at least 60 km/h until the control indicator extinguishes.

NOTE

On a new vehicle, the first exhaust filter regeneration operations may be accompanied by a burning smell, which is normal. Following prolonged operation of the vehicle at very low speed or at idle, water vapour can be emitted at the exhaust on acceleration. This does not affect the behaviour of the vehicle or the environment.

Cleaning process not possible

If or stays on, accompanied by an audible signal and a message, this indicates that the exhaust filter additive level is too low.
The reservoir must be topped-up without delay. Seek the assistance of a workshop.

Catalytic converter

The catalytic converter reduces the amount of harmful substances in the exhaust gases.

CAUTION

Fuel grades other than those listed could damage the catalytic converter or electronic components.
Unburnt petrol will overheat and damage the catalytic converter.
Therefore avoid excessive use of the starter, running the fuel tank dry and starting the engine by pushing or towing.

In the event of misfiring, uneven engine running, a reduction in engine performance or other unusual problems, have the cause of the fault rectified by a workshop as soon as possible.

In an emergency, driving can be continued for a short period, keeping vehicle speed and engine speed low.

Fuel

Diesel Fuelling

The Diesel engines are compatible with bio-fuels that conform to current and future European standards and and can be obtained from filling stations:

B7

Diesel fuel that meets standard EN590 mixed with a biofuel that meets standard EN14214 (possibly containing up to 7% Fatty Acid Methyl Ester)

B10

Diesel fuel that meets standard EN16734 mixed with a biofuel that meets standard EN14214 (possibly containing up to 10% Fatty Acid Methyl Ester)

XTL

Paraffinic Diesel fuel that meets standard EN15940 mixed with a biofuel that meets standard EN14214 (possibly containing up to 7% Fatty Acid Methyl Ester).

B20 B30

The use of B20 or B30 fuel meeting standard EN16709 is possible. However, this use, even occasional, requires strict application of the special servicing conditions referred to as "Arduous conditions".
For more information, contact a dealer or a qualified workshop.

⚠ CAUTION

The use of any other type of (bio) fuel (vegetable or animal oils, pure or diluted, domestic fuel etc.) is strictly prohibited (risk of damage to the engine and fuel system).

ⓘ NOTE

The only Diesel additives authorised for use are those that meet the B715000 standard.

Low temperature operation

At temperatures below 0 °C, some diesel products with biodiesel blends may clog, freeze or gel, which may affect the fuel supply system. Starting and engine operation may not work properly. Make sure to fill winter grade diesel fuel at ambient temperatures below 0 °C. Arctic grade diesel fuel can be used at extremely low temperatures below -20 °C. Using this fuel grade in warm or hot climates is not recommended and may cause engine stalling, poor starting or damage on the fuel injection system.

Refuelling

⚠ DANGER

Before refuelling, switch off ignition and any external heaters with combustion chambers.

Follow the operating and safety instructions of the filling station when refuelling.

⚠ DANGER

Fuel is flammable and explosive.
No smoking. No naked flames or sparks.
If a smell of fuel can be noticed inside the vehicle, have the cause of this remedied immediately by a workshop.

A label with symbols at the fuel filler flap is indicating the allowed fuel types. In Europe the pump nozzles of the filling stations are marked with these symbols. Refuel only the allowed fuel type.

⚠ CAUTION

In case of misfuelling, do not switch on ignition.

Fuel filler flap is located at left rear side of vehicle.

If the vehicle is equipped with an electronic key system, the fuel filler flap can only be opened if the vehicle is unlocked. Depending on the version, release the fuel filler flap by pushing the flap or pulling at the right bottom corner.
Depending on the version, place the key in the lock and unlock the cap.

- To open, turn the cap slowly anti-clockwise.

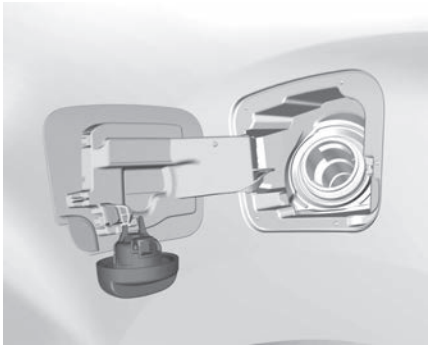

The fuel filler cap can be attached to the hook on the fuel filler flap.

- Place the nozzle in straight position to the filler neck and press with slight force to insert.
- To refuel, switch on pump nozzle.

After the automatic cut-off, the tank can be topped up by operating the pump nozzle a maximum of two more times.

⚠ CAUTION
Wipe off any overflowing fuel immediately.

- To close, turn the fuel filler cap clockwise until it clicks.
- Close the flap and allow it to engage.

Fuel filler cap

Only use genuine fuel filler caps. Diesel-engined vehicles have special fuel filler caps.

Before refuelling

In order to start the refuelling, following preconditions must be fulfilled:

- The ignition is switched off.
- The parking brake is applied.
- The gear selector is in position P.

Refuelling

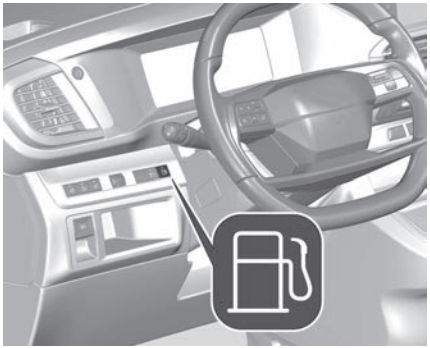

1. Press and hold ⛽. The system performs a check of the preconditions. This may take up to one minute. If the preconditions have been fulfilled, the fuel filler flap is then unlocked, a message is displayed in the Driver Information Centre and a warning chime sounds.

2. Open the fuel filler flap by pulling on the right bottom corner. The fuel filler flap is located at left rear side of the vehicle.

> **NOTE**
>
> If the fuel filler flap has been closed again by mistake, it has to be reopened within one minute, otherwise the refuelling process needs to be started again.

3. Remove the fuel filler cap and refuel the vehicle by following the instructions given by the filling station.
4. After refuelling, reinsert the fuel filler cap, close the fuel filler flap and allow it to engage.

Charging

Battery Charging Operation

General information

> **⚠ WARNING**
>
> Persons with a pacemaker or similar devices should consult a doctor for possible precautions.
> If in doubt, during charging do not remain inside or near the vehicle, near the charging cable or the charging unit.

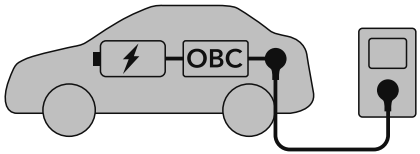

- high voltage battery of the vehicle

- internal onboard charger (OBC)
- charging cable
- external charging device

The charging cable connects the vehicle with an external charging device providing electric power. This may be a domestic electrical outlet, a Green'Up socket, a wall box or a public charging station.
The high voltage battery is charged with direct current (DC) only. When charging the vehicle with alternating current (AC), AC has to be converted into DC. This is done by the vehicle's onboard charger. The onboard charger is available with 7.4 kW (single-phase) and 11 kW (3-phase).
If the vehicle is charged at a public DC charging station, no DC conversion is required. The high voltage battery can be directly charged with DC provided by the DC charging station.
The speed of charging the vehicle's high voltage battery depends upon the weakest element of the charging chain. To achieve the maximum charging speed, charging cable and charging device have to be attuned to each other.

NOTE

Make sure that the charging cable used fits to the vehicle's onboard charger.

Electric power consumption and range

The electric power consumption and the range of the vehicle were not available at time of printing.
For the values specific to your vehicle, refer to the Certificate of Conformity provided with your vehicle or other national registration documents.
The determination of electric power consumption is regulated by directive R (EC) No. 715/2007 and No. 2017/1151 (in the latest applicable version).

Charging types

There are different types of charging the vehicle's high voltage battery.

Charging at wallboxes

A wallbox is a charging unit for private households. It provides a charging cable which has to be connected to the vehicle's charging port. Some wallboxes do not provide a charging cable. In this case, a separate charging cable is required which has to be connected to both the wallbox and the charging port of the vehicle.
Charging time may take approx. 5 to 7 hours with a charging power of 11 kW or 7.5 to 9 hours with a charging power of 7.4 kW.

Charging at charging stations

Charging stations may provide alternating current (AC) or direct current (DC). Charging time may vary depending on the charging station, DC charging stations provide the fastest charging. The charging cable of the charging station has to be connected to the charging port of the vehicle.

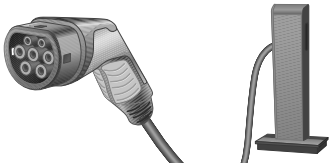

- AC charging station: Charging time may take approx. 5 to 7 hours with a charging power of 11 kW or 7.5 to 9 hours with a charging power of 7.4 kW.

- DC charging station: Up to approx. 80% of battery capacity may be charged in approx. 30 minutes at a charging power of 100 kW.

Charging at domestic electrical outlets

To charge at a domestic electrical outlet, connect the charging cable to the vehicle's charging port and to the domestic electrical outlet.
Charging time may take approx. 30 to 38 hours with a charging power of 1.8 kW.

Charging cables

The charging cable supplied with the vehicle is compatible with the electrical systems in the country of sale. When travelling abroad, check the compatibility of local electrical systems with the charging cable.
Contact a dealer or a qualified workshop for more information and to obtain suitable charging cables.

Basic domestic cable (mode 2) / enhanced domestic cable (mode 2)

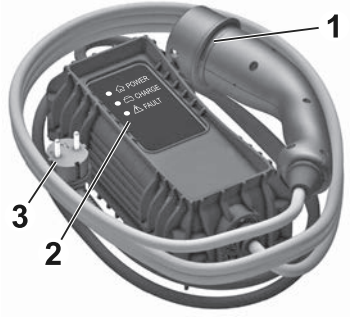

1 Vehicle plug

2 Status indicators

3 Wall plug

Basic domestic cables (mode 2) are used for charging at domestic electrical outlets. A basic domestic cable (mode 2) consists of a vehicle plug, a control box and a plug for the domestic electrical outlet. The control box has an intergrated charge controller and several LEDs indicating the charging status. Enhanced domestic cables (mode 2) are similar to basic domestic cables (mode 2). However, the charging performance of enhanced domestic cables

(mode 2 charging) is better than the charging performance of basic domestic cables (mode 2).
Enhanced domestic cables (mode 2) are used at Green'Up sockets which have to be installed by a certified electrician at the customer's site.

Charging cable status indicators

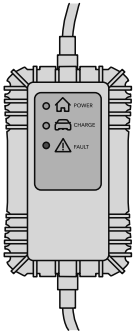

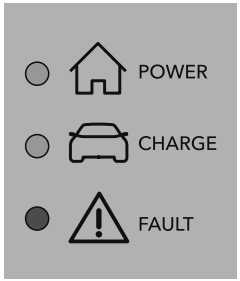

After plugging in the charging cable, it will perform a quick self test and all status indicators illuminate for a moment. For the functions of the status indicators, refer to the manual of the charging cable manufacturer.

Important information about portable BEV charging

- Charging a BEV can stress a building's electrical system more than a typical household appliance.
- Before you plug in to any electrical outlet, have a qualified electrician inspect and verify the electrical system (electrical outlet, wiring, junctions and protection devices) for heavyduty service at a 10 A continuous load.
- Electrical outlets may wear out with normal usage or be damaged over time, making them unsuitable for BEV charging.
- Check the electrical outlet / plug while charging and discontinue use if the electrical outlet / plug is hot, then have the electrical outlet serviced by a qualified electrician.
- When outdoors, plug into an electrical outlet that is weatherproof while in use.
- Mount the charging cable to reduce strain on the electrical outlet / plug.

Mode 3 charging cable

1 Vehicle plug

2 Plug for wall box / AC charging station

Mode 3 charging cables are used for charging at wall boxes and AC charging stations. A mode 3 charging cable provides a vehicle plug and a plug for the wall box / AC charging station. Wall boxes / AC charging stations may provide an integrated mode 3 charging cable. For more information on the mode 3 charging cable, refer to the manual of the charging cable manufacturer.

Mode 4 charging cable

NOTE

Only use DC charging cables shorter than 30 metres.

Mode 4 charging cables are used for DC charging. Since mode 4 charging cables are integrated within DC charging stations, they only provide a vehicle plug.

Identification labels on charging sockets/ connectors

Identification labels are affixed to the vehicle, charging cable and charger to inform the user about which device needs to be used.

Charging connector, vehicle side (mode 2 or mode 3)

Charging socket, charger side (mode 3)

Charging connector, vehicle side (mode 4)

WARNING

Avoid any entry of fluids into the charging port of the vehicle, the vehicle plug of the charging cable and the domestic electrical outlet.

When charging at a public AC charging station / public DC charging station, follow the instructions for the use of the respective charging station. Public AC charging stations may not provide an integrated charging cable. In this case, a portable mode 3 charging cable is required.

WARNING

When charging at a domestic electrical outlet, only use an outlet which is properly grounded and protected by a 30 mA differential switch.
Only use a domestic electrical outlet protected by a circuit breaker adapted to the amperage of the electrical circuit.
Have a qualified electrician check the electrical installation to be used. The installation has to be in compliance with national standards and compatible with the vehicle.
When using a dedicated domestic electrical outlet, have it installed by a qualified electrician.
Make sure that the electrical outlet, the plug and the cable do not support the weight of the control box.

Charging

1. Shift into P and switch off the vehicle.

2. Push the charging port flap to release it.
3. If necessary, take the charging cable out of the load compartment.

4. If necessary, plug in the plug of the charging cable into the corresponding port of the external power source.

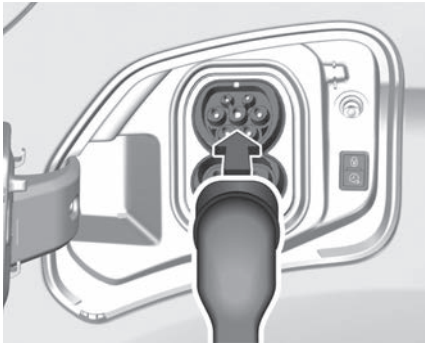

5. Plug in the vehicle plug of the charging cable into the charging port of the vehicle.

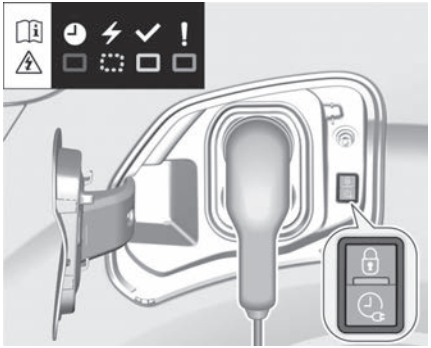

When charging starts, the vehicle connector is locked in the charging port and cannot be disconnected while charging is in progress, 🔒 indicator illuminates.

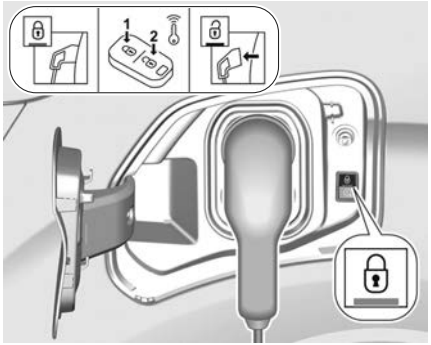

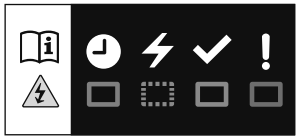

The start of charging is indicated by the green flashing of the status indicator at the charging port and at the control box of the charging cable if available.

State of charging indicator light	Meaning
Fixed white	Welcome lighting on opening the flap and disconnecting the charging cable.
Flashing white	Charging initialisation.
Fixed blue	Deferred charging.
Flashing green	Charging.
Fixed green	Charging complete.
Fixed red	Malfunction.

⚠ WARNING

In case of impact, even light, against the charging flap, do not use it.
Do not dismantle or modify the charging connector - risk of electrocution and/or fire!
Contact a STELLANTIS dealer.

Cancelling the charging process

ⓘ NOTE

At public charging stations, the cancelling and subsequent resuming of the charging process may cause additional costs.
Once the charging process has started, the doors can only be unlocked without cancelling the charging process by previously activating selective unlocking.

Press 🔓 on the remote control to cancel the charging process at any time.

Press 🔓 twice to cancel the charging process at any time if selective locking is activated.

Stop charging

The high voltage battery is fully charged if the status indicator on the charging port permanently illuminates green.

1. Unlock the vehicle before removing the vehicle plug from the charging port.
   If the vehicle is already unlocked, lock the vehicle and unlock it again.

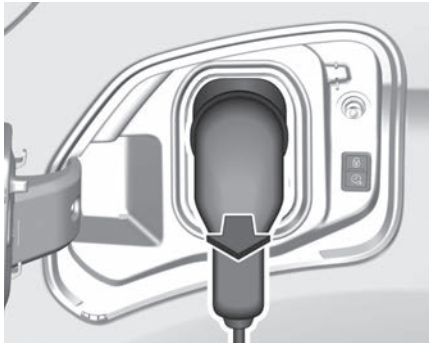

2. Disconnect the vehicle plug of the charging cable from the charging port within 30 seconds after unlocking.
3. Close the charging port flap by pressing firmly in the centre to latch properly.
4. Disconnect the charging cable from the external power source.
5. If necessary, store the charging cable in the load compartment.

While the charging cable is plugged into the vehicle, the vehicle cannot be driven.

Programmable charging

By default, charging starts as soon as the charging cable is connected to the charging port of the vehicle.
Programmable charging is only possible when charging at a domestic electrical outlet / Green'Up socket or a wall box.
Depending on the infotainment system, there are two different ways to use programmable charging via the Info Display

1. Press ⌂.
2. Touch ⚡.
3. Select Charging.
4. Touch ⏲.
5. Define the number of hours and minutes after which the charging process starts.
6. Touch OK.
7. Plug in the vehicle.

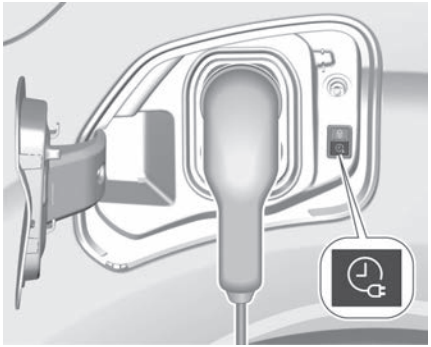

8. Within one minute, press ⏲ to activate programmable charging.
9. Depending on version, lock the vehicle.

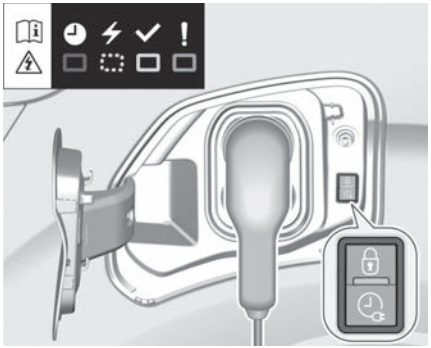

The status indicator illuminates blue indicating that programmable charging is active.

Connection

- Before charging, check that the drive selector is in mode P, otherwise charging is not possible.
- Open the charging flap by pressing the pushbutton, and check that there are no foreign bodies on the charging connector.

Domestic charging, mode 2

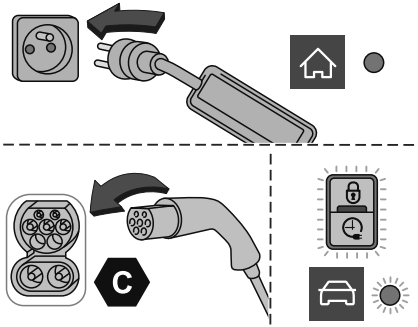

- Connect the charging cable from the control unit to the domestic socket.

  When the connection is made, all of the indicator lights on the control unit

light up, then only the POWER indicator light remains on in green.

- Remove the protective cover from the charging nozzle.
- Insert the nozzle into the charging connector.

The start of charging is confirmed by the flashing green CHARGE indicator lights in the flap, then those on the control unit.

If this is not the case, charging has not started; restart the procedure, ensuring that all connections are properly established.
The red indicator light in the flap comes on to indicate that the nozzle is locked.

> **NOTE**
>
> When charging is complete and while the charging cable is still connected, opening the driver's door will display the charge level on the instrument panel for about 20 seconds.

Accelerated charging, mode 3

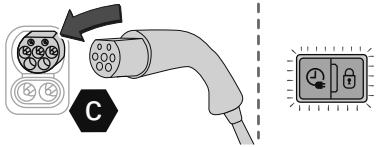

- Follow the instructions for use of the accelerated charging unit (Wallbox).
- Remove the protective cover from the charging nozzle.
- Insert the nozzle into the charging connector.

The start of charging is confirmed when the charging indicator light in the flap flashes green.
If this is not the case, charging has not started; restart the procedure, ensuring that the connection has been properly established.
The red indicator light in the flap comes on to indicate that the nozzle is locked.

Superfast charging, mode 4

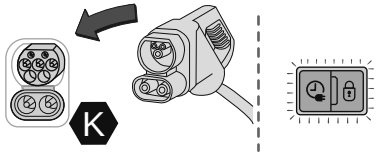

- Depending on version, remove the protective cover from the lower part of the connector.
- Follow the instructions for use and connect the fast public charger cable to the vehicle connector.

The start of charging is confirmed by the flashing green charging indicator light in the flap.
If this is not the case, charging has not started; restart the procedure, ensuring that the connection is properly established.
The red indicator light in the flap comes on to indicate that the nozzle is locked.

Disconnection

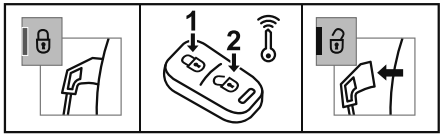

Before disconnecting the nozzle from the charging connector:

- If the vehicle is unlocked, lock it and then unlock it.
- If the vehicle is locked, unlock it.
  The red indicator light in the charging flap goes out to confirm that the charging nozzle is unlocked.

- In modes 2 and 3, remove the charging nozzle within 30 seconds.
  The charging indicator light comes on in white.

NOTE

With selective door unlocking activated, press the unlocking button twice to disconnect the charging nozzle.

NOTE

When charging is complete, the green charging indicator light in the flap goes out after about 2 minutes.

Manual unlocking of the charging connector

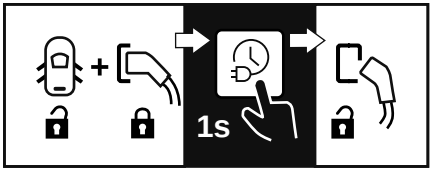

Before disconnecting the nozzle from the charging connector:

- If the vehicle is locked, unlock it.
- If the vehicle is unlocked, lock it and then unlock it.

The red indicator light in the flap goes out to confirm that the charging nozzle is unlocked.

- Within 30 seconds, remove the charging nozzle.

High voltage system

The electric drive system, which operates at a voltage of approximately 400 V, is identified by orange cables and its components are marked with this symbol:

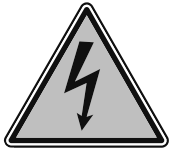

WARNING

An electric vehicle's power train can become hot during use and after switching off the ignition.
Comply with the warning messages shown on the labels, particularly inside the charging flap.

High Voltage Battery

WARNING

Damage to the high voltage battery or high voltage system can create a risk of electric shock, overheating, or fire.
If the vehicle has been damaged or affected by a moderate to severe crash, it must be inspected as soon as possible by qualified personnel. Until the technical inspection has been carried out, the vehicle must be stored outside at a minimum distance of 5 metres from any structure or other flammable objects.
If the vehicle has been damaged or affected by flood or fire, it must not be moved at all and has to be inspected by qualified personnel as soon as possible.

To preserve the range and the durability of the high voltage battery, the following is recommended:

- Charge the high voltage battery to a charging level of 100 % once a week to optimize battery performance and long-term health. When the vehicle has not been fully charged for 1500

km, a message will be shown on the instrument cluster reminding to do so as soon as possible. If the vehicle has been parked for longer than one week without charging, start the vehicle as usual and charge the high voltage battery to a charging level of 100% as soon as possible.
- BEV: do not completely discharge the high voltage battery.
- BEV: do not store the vehicle for a long period of non-use (more than twelve hours) when the high voltage battery has a low or high charge level. Prefer a charge level between 20 and 40%.
- Limit the use of fast charging.
- Do not expose the vehicle to temperatures below -30 °C and above 60 °C for more than 24 hours.
- Avoid charging the vehicle at low temperatures (except if the vehicle ran more than 20 minutes) or above 30 °C.
- Do not use the high voltage battery as a generator of energy.
- Do not use a generator to recharge the high voltage battery.

Leakage

Damage to the high voltage battery could result in the leakage of toxic gases or fluids either immediately or later. The following is recommended:

- Always inform the fire and emergency services in the event of an incident, that the vehicle is equipped with a high voltage battery.
- Never touch the liquids leaking from the high voltage battery.
- Do not inhale the gases emitted by the high voltage battery which are toxic.
- Move away from the vehicle in the event of incident or accident, the gases emitted being flammable and could cause a fire.
- Too low a coolant level must be topped up and the cause of the coolant loss remedied by a workshop.

Vehicle Loading

Roof Bars

For safety reasons and to avoid damage to the roof, the vehicle approved roof rack system is recommended. For further information contact your workshop.

Follow the installation instructions and remove the roof rack when not in use. The roof load is the combined weight of the roof rack and the load.

Mounting

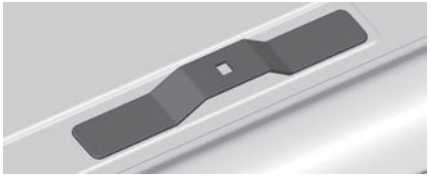

Fasten the roof rack according to the installation instructions delivered with the roof rack.

The number and location of the mounting points may vary depending on the vehicle:

Vehicles with glass panel

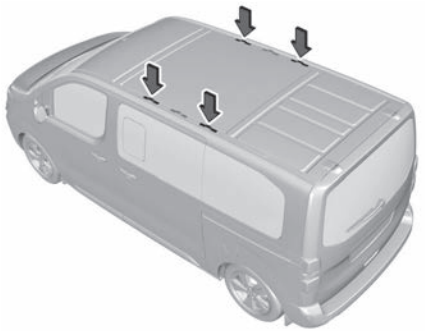

Mount two roof bars using the mounting points marked in the picture.
Permissible roof load L1, L2, L3 max. 100 kg.

Vehicles without glass panel

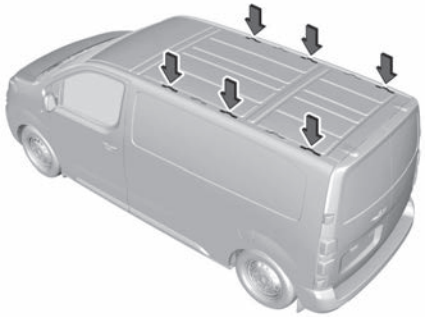

Mount three roof bars using the mounting points marked in the picture.
Permissible roof load L1, L2, L3 max. 150 kg.

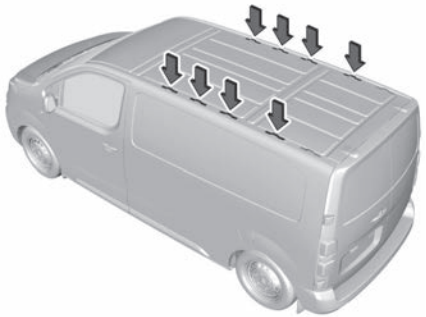

Mount the roof rack using the mounting points marked in the picture.
Permissible roof load L1 max. 140 kg.
Permissible roof load L2, L3 max. 170 kg.

Load Reduction Mode

⚠ WARNING

Always make sure that the load in the vehicle is securely stowed. Otherwise objects can be thrown around inside the vehicle and cause personal injury or damage to the load or car.

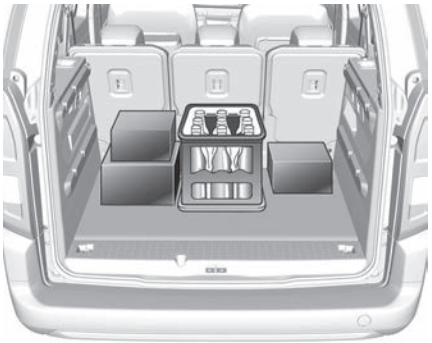

- Heavy objects in the load compartment should be placed against the

seat backrests. Make sure that the backrests are securely engaged. If objects can be stacked, heavier objects should be placed at the bottom.

- Prevent sliding of loose objects by securing them with straps attached to the lashing eyes.
- Do not allow the load to protrude above the upper edge of the backrests.
- Do not place any objects on the rear luggage cover or the instrument panel, and do not cover the sensor on top of the instrument panel.
- The load must not obstruct the operation of the pedals, parking brake and gear selector, or hinder the freedom of movement of the driver. Do not place any unsecured objects in the interior.
- Do not drive with an open load compartment.
- The payload is the difference between the permitted gross vehicle weight (see identification plate) and the kerb weight.
  To calculate the payload, enter the data for your vehicle in the weights table at the front of this manual.
  The kerb weight includes weights for the driver (68 kg), luggage (7 kg) and all fluids (fuel tank 90% full).
  Optional equipment and accessories increase the kerb weight.
- Driving with a roof load increases the sensitivity of the vehicle to crosswinds and has a detrimental effect on vehicle handling due to the vehicle's higher centre of gravity.
  Distribute the load evenly and secure it properly with retaining straps. Adjust the tire pressure and vehicle speed according to the load conditions. Check and retighten the straps frequently.
  Do not drive faster than 120 km/h.

Trailer Towing

Only use towing equipment that has been approved for the vehicle.
Entrust retrofitting of towing equipment to a workshop. It may be necessary to make changes that affect the cooling system, heat shields or other equipment.

Towing Device

The permissible trailer loads are vehicle and engine-dependent maximum values which must not be exceeded.
The actual trailer load is the difference between the actual gross weight of the trailer and the actual coupling socket load with the trailer coupled.
The permissible trailer loads are specified in the vehicle documents. In general, they are valid for gradients up to 12%.
The permissible trailer load applies up to the specified incline and at sea level. Since engine power decreases as altitude increases due to the air becoming thinner, therefore reducing climbing ability, the permissible gross train weight also decreases by 10% for every 1000 metres of altitude. The gross train weight does not have to be reduced when driving on roads with slight inclines (less than 8%, e.g. motorways).
The permissible gross train weight must not be exceeded. This weight is specified on the identification plate.
When distributing the loads in the trailer, heavy objects should be placed as close as possible to the axle.

Vertical coupling load

The vertical coupling load is the load exerted by the trailer on the coupling ball. It can be varied by changing the

weight distribution when loading the trailer.
The maximum permissible vertical coupling load is specified on the towing equipment identification plate and in the vehicle documents.
Always aim for the maximum vertical coupling load, especially in the case of heavy trailers. The vertical coupling load should never fall below 25 kg.

Rear axle load

When the trailer is coupled and the towing vehicle fully loaded, the permissible rear axle load (see identification plate or vehicle documents) may be exceeded by 60 kg, the gross vehicle weight rating must not be exceeded. If the permissible rear axle load is exceeded, a maximum speed of 100 km/h applies.

Towing equipment

Depending on version the vehicle can be fitted with a detachable or a fixed coupling ball bar.

Type A

⚠ CAUTION
When operating without a trailer, remove the coupling ball bar.

Fitting the coupling ball bar

1. Swivel the connecting socket downwards. Take off the cap.

2. Insert the coupling ball bar into the opening and push firmly up to the stop.

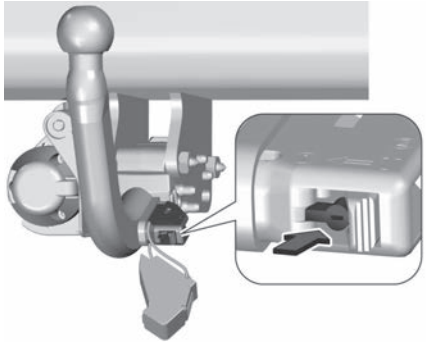

3. Insert the plug lock in the opening and lock it with the corresponding key.
4. Put on the cap.
5. Attach the trailer.

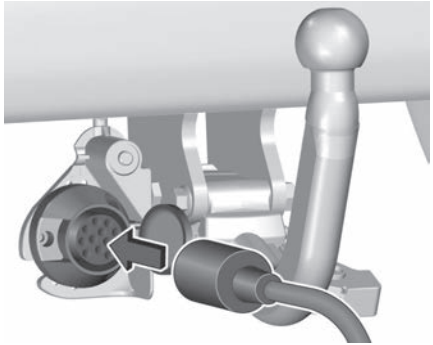

6. Connect the trailer plug to the socket.

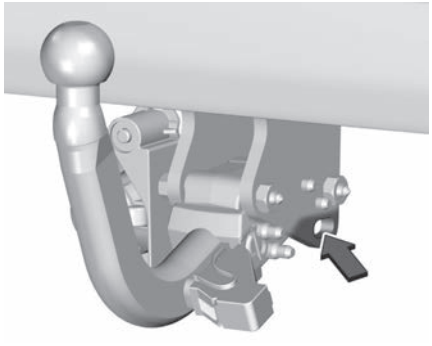

7. Attach the breakaway stopping cable to the eye on the carrier.

⚠ WARNING

Towing a trailer is permitted only when a coupling ball bar is fitted correctly. If the coupling ball bar does not engage correctly, seek the assistance of a workshop.

Dismounting coupling ball bar

1. Disconnect the trailer plug.
2. Unfasten the breakaway stopping cable.
3. Remove the trailer.

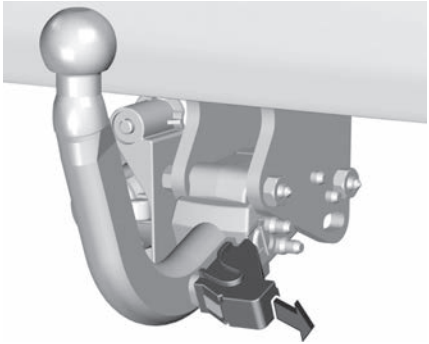

4. Take off the cap.

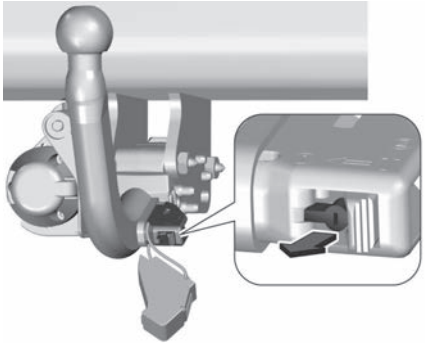

5. Insert the key in the plug lock, unlock it and remove it from the opening.

6. Move 1 to left and hold it pressed, push 2 to the back and remove the coupling ball.
7. Swivel the connecting socket upwards. Put on the cap.

Type B

1. Swivel the connecting socket downwards.
2. Attach the trailer.

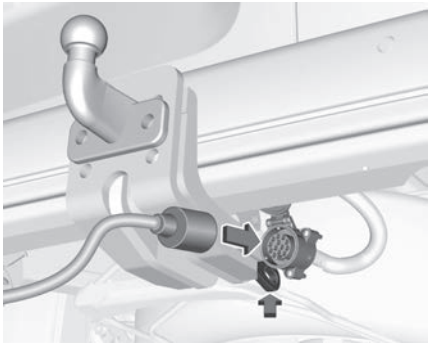

3. Connect the trailer plug to the socket and fasten the break-away stopping cable to the eye on the carrier.

Type C

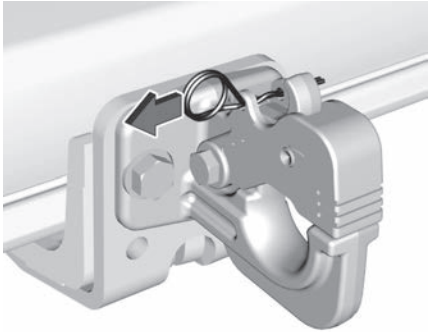

1. Remove the safety splint.

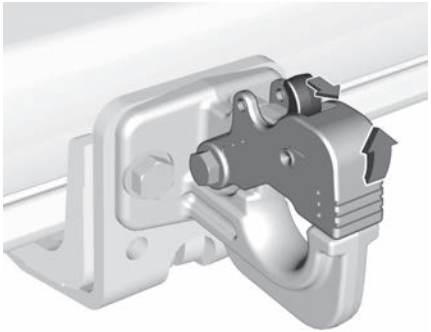

2. Pull the lever and open the towing ring.

3. Swivel the connecting socket downwards.
4. Attach the trailer, close the towing ring and fix the splint.

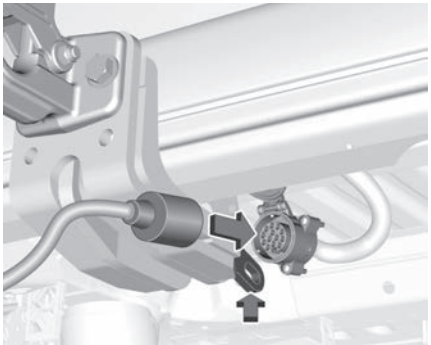

5. Connect the trailer plug to the socket and attach the breakaway stopping cable to the eye on the carrier.

Type D

1. Swivel the connecting socket downwards.
2. Attach the trailer.

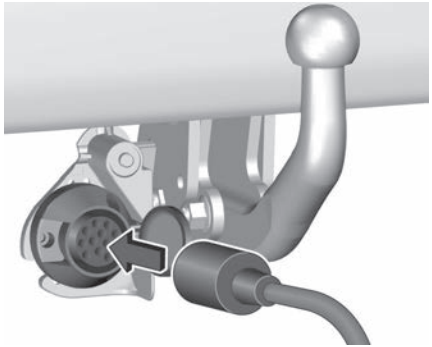

3. Connect the trailer plug to the socket and fasten the breakaway stopping cable to the eye on the carrier.

Trailer stability assist

If the system detects snaking movements, engine power is reduced and the vehicle / trailer combination is selectively braked until the snaking ceases. While system is working keep steering wheel as still as possible.

Trailer stability assist is a function of the Electronic Stability Control.

Towing recommendation

Observe the legislation in force in the country where you are driving.
Check that the towing vehicle is heavier than the towed vehicle.
The driver must remain at the wheel of the towed vehicle and must have a valid driving licence.
When towing a vehicle with all four wheels on the ground, always use an approved towbar; ropes and straps are prohibited.
The towing vehicle must move off gently.
When the vehicle is towed with its engine off, there is no longer braking and steering assistance.

ADVANCED DRIVING ASSISTANCE SYSTEMS (ADAS)

Introduction To Assistance Systems

General Information

⚠ WARNING

Driver assistance systems are developed to support the driver and not to replace the driver's attention. The driver accepts full responsibility when driving the vehicle.
When using driver assistance systems, always take care regarding the current traffic situation.

ⓘ NOTE

To comply with the European general safety regulations, some driver assistance systems can only be deactivated on the Info Display until the next time the ignition is reactivated. The system is automatically activated by default every time the engine is started.

BEV

Due to the vehicle's quiet operation when driving, the driver must pay particular attention.

Speed Control Assistance System

Speed limiter

The speed limiter prevents the vehicle exceeding a preset maximum speed. The maximum speed can be set at speeds above 30 km/h.
The driver can accelerate the vehicle up to the preset speed. Deviations from the limited speed may occur when driving downhill.

Switching on the system

Press LIMIT.
Depending on version, either the speed limiter screen or only LIMIT displayed.
LIMIT is grey indicating that the system is still not active.

Activation of the functionality

Press OK or ||▶ to activate the speed limiter. LIMIT is illuminated in green or white.

Setting speed by the driver

The preset speed can be changed by moving the thumb wheel to + to increase or − to decrease the speed. Move thumb wheel repeatedly to change speed in small steps, move and hold to change speed in large steps.

Adopting speed by the speed limit recognition

A detected speed limit can be used as new set speed for the speed limiter. Depending on version, the traffic sign assistant has to be activated to detect speed limit signs.

When passing the speed limit sign

With activated speed limiter, OK? is automatically displayed.

Press OK on the steering wheel to store the suggested speed.

The suggested speed is shown as new speed setting.

After passing the speed limit sign

With activated speed limiter, press OK on the steering wheel.

OK? is displayed.

Press OK to store the suggested speed.

The suggested speed is shown as new speed setting.

Exceeding the speed limit

In the event of an emergency, it is possible to exceed the speed limit by depressing the accelerator pedal firmly to the final point. In this case, the preset speed value flashes.
Release the accelerator pedal and the speed limiter function is reactivated once a speed lower than the limit speed is obtained.
When exceeding the preset speed is not caused by depressing the accelerator pedal, e.g., when driving down a steep slope, an audible signal is given.

⚠ WARNING

On a steep descent or in the event of sharp acceleration, the speed limiter will not be able to prevent the vehicle from exceeding the preset speed. If necessary, depress the brake pedal to control the vehicle's speed.

Deactivation of the functionality

Press ||▶, speed limiter is in pause mode. LIMIT is illuminated in grey. The vehicle is driven without speed limiter. Speed limiter is deactivated, but not switched off. Last stored speed remains in memory for later speed resume.

Resume limit speed

Press ||▶ or OK, the stored speed limit will be obtained.

Switching off the system

Press LIMIT, the speed limiter mode is deselected and the speed limiter screen is hidden from the Driver Information Centre or LIMIT extinguishes.

Fault

The speed limit recognition may not operate correctly if traffic signs do not comply with the Vienna Convention on Road Signs and Signals.
In the event of a speed limiter fault, the speed is cleared resulting in flashing of the dashes.
Have the system checked by a workshop.

Cruise control

The cruise control can store and maintain speeds above 40 km/h.
For vehicles with manual transmission, any gear has to be selected. For vehicles with automatic transmission, position D or the second or a higher gear in position M must be selected.
Deviations from the stored speeds may occur when driving uphill or downhill.
The system maintains the vehicle speed at the preset speed by the driver, without any action on the accelerator pedal.
The preset speed can be exceeded temporarily by pressing the accelerator pedal firmly.
The status and preset speed is displayed in the Driver Information Centre.

Do not use the cruise control if it is not advisable to maintain a constant speed.

Switching on the system

Press .
Depending on version, either the cruise control screen or only is displayed.
 is grey indicating that the system is still not active.

Activation of the functionality

If all operating conditions are met, OK? is displayed.

Press OK to store the current vehicle speed as speed setting and activate the cruise control.

 changes from grey to green or white indicating that system is active.
The accelerator pedal can be released.
Alternatively, move the thumb wheel to + to increase or − to decrease the speed and store this speed as speed setting. Cruise control is immediately activated if the thumbwheel is moved upwards or downwards.
 changes from grey to green or white.

Setting speed by the driver

If the system is active, the preset speed can be changed by moving the thumb wheel to + to increase or − to decrease the speed. Move thumb wheel repeatedly to change speed in

small steps, move and hold to change speed in large steps.

Adopting speed by the speed limit recognition

A detected speed limit can be used as new set speed for the cruise control. Depending on version, the traffic sign assistant has to be activated to detect speed limit sign.

When passing the speed limit sign

With activated cruise control, OK? is automatically displayed.

Press OK on the steering wheel to store the suggested speed.

The suggested speed is shown as new speed setting.

After passing the speed limit sign

With activated cruise control, press OK on the steering wheel.

OK? is displayed Press OK to store the suggested speed.
The suggested speed is shown as new speed setting.

Exceeding the set speed

It is always possible to drive faster than the set speed by depressing the accelerator pedal. When the accelerator pedal is released, the vehicle returns to the stored speed.
While the set speed is exceeded, the set speed setting flashes.

Deactivation of the functionality

Press ||▶. Cruise control is in pause mode. is illuminated grey. The vehicle is driven without cruise control. Cruise control is deactivated, but not switched off. Last stored speed remains in memory for later speed resume.
The cruise control may be deactivated automatically in the following cases:

- brake pedal depressed
- traction control system or electronic stability control is operating
- reverse gear engaged, N selected or no gear engaged
- clutch pedal depressed for more than five seconds
- electric parking brake engaged

Resume stored speed

Press ||▶ or OK, the stored speed will be set.

Switching off the system

Press , the cruise control mode is deselected and the cruise control screen is hidden from the Driver Information Centre or .

System limitations

Never use the system in the following situations:

- In an urban area with the risk of pedestrians crossing the road.
- In heavy traffic.
- On winding or steep roads.
- On slippery or flooded roads.
- In poor weather conditions.
- In the event of restricted visibility for the driver.
- Driving on a speed circuit.
- Driving on a rolling road.
- When using snow chains, nonslip covers or studded tires.

When driving down a steep hill, the system cannot prevent the vehicle from exceeding the set speed. Brake if necessary.
When driving up a steep hill or when towing, the set speed may not be reached or maintained.

Fault

The speed limit recognition may not operate correctly if traffic signs do not comply with the Vienna Convention on Road Signs and Signals.
In the event of a cruise control fault, the speed is cleared resulting in flashing of the dashes.
Have the system checked by a workshop.

Adaptive cruise control (ACC)

The adaptive cruise control is an enhancement of the cruise control with the additional feature of maintaining a certain following distance to the vehicle ahead.

It uses a radar unit located in the front bumper to detect the vehicles ahead.
If no vehicle is detected in the driving path, the adaptive cruise control will behave like a conventional cruise control.
The adaptive cruise control automatically decelerates the vehicle when approaching a slower moving vehicle. It then adjusts the vehicle speed to follow the vehicle ahead at the selected following distance. The vehicle speed increases or decreases to follow the vehicle ahead, but will not exceed the set speed. It may apply limited braking with activated brake lights.
If the vehicle ahead accelerates or changes lane, the adaptive cruise control progressively accelerates the vehicle to return to the stored set speed.
If the driver operates the turn lights to overtake a slower vehicle, the adaptive cruise control allows the vehicle to temporarily approach the vehicle ahead to help passing it.
However, the set speed will never be exceeded.
If the vehicle ahead is moving too slowly and the selected following distance cannot be maintained anymore, a warning chime is given and a message is displayed. The message prompts the driver to take back control of the vehicle. On vehicles with manual transmission, the system can brake the vehicle until 30 km/h. On vehicles with automatic transmission, the system can brake the vehicle until a full stop. Depending on version, the system can automatically accelerate the vehicle after a full stop.

⚠ WARNING

The brake lamps come on if the vehicle is slowed down.
If the brake lights fail, the system does not operate.

Switching on the system

Press ASSIST successively until the adaptive cruise control mode is selected.
The adaptive cruise control screen is displayed. The system is still not activated.

Activation conditions

The system can be activated if the following conditions are met:

- vehicle speed between 30 km/h and 180 km/h for vehicles with manual transmission, between 0 km/h and 180 km/h for vehicles with automatic transmission
- driver's door closed
- driver's seat belt fastened
- D selected or second or higher gear engaged
- parking brake released
- brake pedal depressed if vehicle stationary

Activation of the functionality

If all operating conditions are met, OK? is displayed.

Press OK to store the current vehicle speed and activate the cruise control.

On the adaptive cruise control screen, the set speed and a road element are displayed in green. The accelerator pedal can be released.
Alternatively, move the thumb wheel to + to increase or − to decrease the speed and store this speed. The cruise control is immediately activated if the thumbwheel is moved upwards or downwards. On the adaptive cruise control screen, the set speed and the road element are displayed in green.

Setting speed by the driver

The set speed can be changed by moving the thumb wheel to + to increase or − to decrease the speed. Move thumb wheel repeatedly to change speed in small steps, move and hold to change speed in large steps.

Adopting speed by the speed limit recognition

A detected speed limit can be used as new value for the adaptive cruise control.

When passing the speed limit sign

With activated adaptive cruise control, OK? is automatically displayed.

Press OK on the steering wheel to store the suggested speed.

The suggested speed is shown as new speed setting.

After passing the speed limit sign

With activated adaptive cruise control, press OK on the steering wheel.

OK? is displayed Press OK to store the suggested speed.
The suggested speed is shown as new speed setting.

Exceeding the set speed

It is always possible to drive faster than the set speed by depressing the accelerator pedal. When the accelerator pedal is released, the vehicle returns to the stored speed. If a slower moving vehicle is ahead, the following distance selected by the driver is restored.
While the set speed is exceeded, the set speed flashes on the adaptive cruise control screen.

⚠ WARNING

Accelerating by the driver deactivates automatic braking by the system. This is indicated as a pop-up warning in the Driver Information Centre.

Resuming stored speed

Press ||▶ or OK to reactivate the adaptive cruise control at the stored speed.

Adaptive cruise control on vehicles with automatic transmission

For vehicles with automatic transmission, the adaptive cruise control allows to maintain the selected distance behind a braking vehicle until a complete stop is reached.
If the system has stopped your vehicle behind another vehicle, the green control indicator (Ⓐ) is displayed next to the set speed setting. This symbol notifies, that the vehicle is hold automatically in stop position.
While the vehicle is hold in stop position, the following recommendations should be followed:

- Do not leave the vehicle.
- Do not open the load compartment.
- Do not engage the reverse gear.
- Do not drop off or pick up passengers.

Within three seconds after the vehicle has been stopped by the system, the vehicle slowly moves again. After three seconds, accelerate or press ||▶ to drive away. Pay attention to the surroundings of the vehicle when driving away.
If the vehicle stays stopped for more than five minutes without any action of the driver, the electric parking brake is applied. Control indicator (Ⓟ) will illuminate. To release electric parking brake, press the accelerator pedal.

⚠ WARNING

When the system is deactivated or cancelled, the vehicle will no longer be held at a stop and can start moving. Be always prepared to manually apply the brake to hold the vehicle stationary.

Do not leave the vehicle while it is being held at a stop by adaptive cruise control. Always engage P and switch off the ignition before leaving the vehicle.

Setting the following distance

When the adaptive cruise control detects a slower moving vehicle in the driving path, it will adjust the vehicle speed to maintain the following distance selected by the driver.
The following distance can be set to close (1 bar), normal (2 bars) or far (3 bars).
If the engine is running and the adaptive cruise control is switched on (grey) or active (green), you can modify the following distance setting:

Press the button to display the current following distance setting in the Driver Information Centre.
Press the button successively to select the required following distance setting.

The selected following distance is indicated by full bars on the adaptive cruise control screen.

⚠ WARNING

The driver accepts full responsibility for the appropriate following distance based on traffic, weather and visibility conditions.
Following distance must be adjusted or the system switched off when required by the prevailing conditions.

Detecting the vehicle ahead

If the system detects a vehicle in the driving path, the adaptive cruise control screen changes accordingly.

Deactivation of the functionality

Press ||▶, adaptive cruise control is in pause mode. The preset speed is illuminated grey.
The adaptive cruise control is deactivated, but not disabled. The last stored set speed remains in memory for later usage.
The adaptive cruise control is deactivated automatically in the following cases:

- brake pedal depressed
- traction control system or electronic stability control is operating
- reverse gear engaged, N selected or no gear engaged
- speed falls below 30 km/h for a vehicle with manual transmission
- risk of engine stalling in case of a vehicle with manual transmission
- clutch pedal depressed for more than ten seconds
- electric parking brake engaged
- seat belt unfastened
- driver's door opened

Switching off the system

Press ASSIST successively to switch adaptive cruise control off.

System limits

⚠ WARNING

The system's automatic brake force does not permit hard braking and the braking level may not be sufficient to avoid a collision.

- After a sudden lane change, the system needs a certain time to detect the next preceding vehicle. So if a new vehicle is detected, the system may accelerate instead of braking.
- The adaptive cruise control only considers traffic driving in the same direction.
- The adaptive cruise control does not consider pedestrians, cyclists and animals for braking and driving off.
- The adaptive cruise control does not consider stationary vehicles.

As the radar's field of detection is quite narrow, it is possible that the system may not detect:

- vehicles of reduced width, e.g. motorcycles, scooters
- vehicles not running in the middle of the lane
- vehicles entering a corner
- vehicles suddenly pulling out or in
- vehicles ahead braking excessively

Deactivate the system in the following situations:

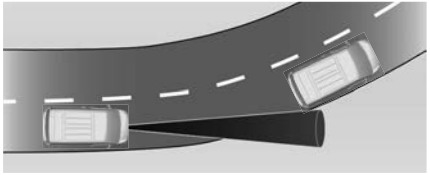

- when driving in a tight bend
- when approaching a roundabout
- when following a vehicle not detected by system, e.g., a motorcycle
- when the vehicle ahead sharply decelerates
- when a vehicle cuts in sharply

Hill considerations

⚠ WARNING

Do not use the adaptive cruise control on steep hill roads.

System performance on hills depends on vehicle speed, vehicle load, traffic conditions and the road gradient. It may not detect a vehicle in your path while driving on hills. On steep hills, you may have to use the accelerator pedal to maintain your vehicle speed.
When going downhill you may have to brake to maintain or reduce your speed.
Note that applying the brake deactivates the system.

Radar unit

The radar unit is located in the middle of the front bumper.

⚠ WARNING

The radar unit was aligned carefully during manufacture.
Therefore, in the event of a frontend impact, do not use the system.
The front bumper may appear to be intact, however the sensor behind may be affected and react incorrectly. After an accident, consult a workshop to verify and adjust the radar unit position.

⚠ WARNING

The usage of a license plate support on the front bumper may affect the proper radar unit functionality.
When using a license plate support, follow the markings and indications on the front bumper

Fault

In the event of an adaptive cruise control fault, a warning light is illuminated in the Driver Information Centre and a warning message is displayed in the Driver Information Centre accompanied by an audible signal.
The speed limit recognition may not operate correctly if traffic signs do not comply with the Vienna Convention on Road Signs and Signals.
Have the system checked by a workshop.
As a safety measure, do not use the system if the brake lights are faulty.
Do not use the system if the front bumper is damaged.

Collision Avoidance Assistance System

Active Emergency Braking (AEB)

Active emergency braking can help to reduce the damage and injury from crashes with vehicles and pedestrians directly ahead, when the driver does not actively take action either by manual braking or by steering. For vehicles equipped with camera and radar, active emergency braking also detects cyclists Before the active emergency braking applies, the driver may be warned by the forward collision alert.

⚠ WARNING

This system is not intended to replace the driver's responsibility for driving the vehicle and looking ahead. It warns the driver if the vehicle is at risk of a collision with the preceding vehicle, a pedestrian or a cyclist. Just before the imminent collision, it reduces the vehicle's speed to avoid a collision or to limit its severity.

The system may also react on animals. However, animals smaller than 0.5 m or objects on the road may not be detected.
After a sudden lane change, the system needs a certain time to detect the next preceding vehicle.
The driver must always be ready to take action and apply the brakes and steer to avoid collisions.

Activating / deactivating the system

Active emergency braking is activated / deactivated on the Info Display.
Depending on version, deactivation is only possible at a standstill.
If deactivated, (🚘) illuminates and a message is shown in the Driver Information Centre.
Depending on version, the system is automatically activated by default every time the engine is started.

Functionality

Depending on the vehicle configuration and the detected objects, there are several operational speed ranges.
Active emergency braking operates up to 80 km/h when a pedestrian has been detected.
On vehicles equipped with radar sensor and front camera, the active emergency braking operates up to 80 km/h when a stationary vehicle or a cyclist has been detected.
On vehicles equipped only with front camera, the active emergency braking operates from 5 km/h to 85 km/h when a moving vehicle has been detected.
On vehicles equipped with radar sensor and front camera, the active emergency braking operates from 5 km/h to 140 km/h when a moving vehicle has been detected.
The system includes:

- forward collision alert
- smart brake assist
- automatic braking

Forward collision alert

The forward collision alert warns the driver if there is a risk of collision with the vehicle ahead, with a cyclist or a pedestrian.

Alerting the driver

The driver is warned by following alerts:

- Level 1: A warning message is displayed in the Driver Information Cen-

tre, when the distance to the vehicle ahead gets too small.

- Level 2: A warning message is displayed in the Driver Information Centre and a warning chime sounds, when a collision is imminent and immediate driver's action is required.
- Level 3: Depending on version, the vehicle may produce a short brake jerk to confirm the risk of collision. The immediate driver's action is required.

⚠ WARNING

When approaching a vehicle ahead too rapidly, a level 2 alert may be displayed without a level 1 alert before.
Level 1 alerts depend on the alert sensitivity set. This alert type is only displayed in case of moving vehicles. At lower speed it is disabled.

Selecting the alert sensitivity

ⓘ NOTE

If the alert sensitivity setting with the longest distance is set, the system warns earlier. This increases the safety, but increases the amount of alerts if the legal safety distance is not kept. To reduce the number of alerts, select a shorter alert sensitivity setting.

Three alert sensitivities can be selected in the driver assistance systems menu. The chosen setting will be memorised when the ignition has been switched off. The alert sensitivity will vary based on selected alert setting.

Smart brake assist

If the driver brakes, but not sufficiently to avoid a collision, this system will supplement the braking. This assistance will only be provided if the driver presses the brake pedal.
Smart brake assist will automatically disengage when the brake pedal is released.

Automatic braking

Just before the imminent collision, this function automatically applies limited braking to reduce the impact speed of the collision or prohibit a crash.
If active emergency braking is applied, (🚘) flashes in the Driver Information Centre. If active emergency braking is finished, (🚘) flashes for a few seconds. During this time, active emergency braking cannot be applied if there is a risk of a further collision.
Depending on version, below a speed of 30 km/h or 50 km/h, automatic braking may slow down the vehicle to a complete stop. If the speed exceeds this limit, automatic braking reduces the speed. However, the driver must apply the brake to come to a complete stop.

- Automatic transmission: If the vehicle comes to a complete stop, automatic braking is maintained for a certain time.
  Keep the brake pedal depressed to prevent the vehicle from starting off again.
- Manual transmission: If the vehicle comes to a complete stop, the engine may stall. Keep the brake pedal depressed to prevent the vehicle from rolling away.

Cruise control will be deactivated when an emergency automatic braking occurs.
In some cases, the driver may wish to override the automatic braking provided by the active emergency braking system. Firmly apply the accelerator pedal

or firmly turn the steering wheel to override the automatic braking if the situation and the surroundings permit.

⚠ WARNING

Do not rely on the system to brake the vehicle. Active emergency braking will not brake automatically outside of its operating speed range.

Operation conditions

Active emergency braking only works when:

- the brake system is operational
- Electronic Stability Control and Traction Control are activated
- the seat belts of the front seats and depending on version of the rear seats are fastened
- constant speed on unwinding roads

Active emergency braking is automatically deactivated in the following cases:

- A spare wheel with smaller diameter is detected.
- A fault with the brake pedal switch or with the left or right brake light is detected.
- A fault in the active emergency braking system, in the electronic or in the brake system is detected.
- A severe crash, e.g., with airbag deployment was detected.

System limitations

The system performance may be degraded or not available in the following cases:

- sensor covered with snow, ice, slush, mud or dirt
- windshield damaged or smeared, with blurred view or covered with foreign items, e.g. stickers
- damaged or deformed front bumper or front bumper covered with foreign items, e.g. stickers
- radar unit is out of its regular position resulting from an impact of the front bumper
- front camera out of its regular position
- automatic braking not available, e.g. brake discs cooling going on
- brake pedal continuously used for a long time, e.g. on a long downhill road
- winding or hilly roads
- system initialization process after battery disconnection
- dazzling light, e.g. caused by the sun or artificial illumination is shining directly into the camera lens
- adverse environmental conditions, e.g. rain, fog, or snow
- vehicle ahead creating road spray

After an impact or when damages are visible have the vehicle checked by a workshop.
The system performance may be affected by:

- Electronic Stability Control and Traction Control in progress
- vehicle battery voltage out of range
- wet road reflecting lights
- close vehicles ahead
- tractors, muddy vehicles or vehicles with a trailer
- banked roads
- poor lighting conditions
- sudden lighting changes
- vehicle modifications, e.g. tires
- vehicle overloaded

The driver must not overload neither the load compartment nor the roof of the vehicle.

If a sensor is covered, a message is displayed indicating that the sensors have to be cleaned.
If the system is temporarily affected and no driver action is required, no message is displayed.
Complete attention is always required while driving, and be ready to take action to avoid crashes.
We recommend to deactivate the system in the vehicle personalisation in the following cases:

- when towing a trailer or caravan
- when carrying long objects on roof bars or a roof rack
- when the vehicle is being towed
- when performing any maintenance with ignition on
- when the vehicle is fitted with snow chains
- when a spare wheel is fitted that is smaller than the other wheels
- before using an automatic car wash
- before placing the vehicle on a rolling road in a workshop
- if the windshield has been damaged close to the camera
- if the front bumper has been damaged or deformed
- if the radar unit is out of its regular position resulting from an impact of the front bumper
- if the brake lights are not working

Fault

If the system has been deactivated, (🚘) illuminates in the Driver Information Centre.
If the system has a fault, (🚘) illuminates in the Driver Information Centre, a message is displayed and an audible signal is given. Consult a workshop. If no message is displayed, stop the vehicle and check whether sensors or front camera are covered.
If the system does not work properly or is not available, e.g. during the initialisation, (🚘) illuminates in the Driver Information Centre.
(🚘) may also illuminate if the infotainment system has an issue.
If (🚘) and 🔧 illuminate in the Driver Information Centre after the engine has been switched off and then restarted, consult a workshop.

Brake Assist (BA)

If brake pedal is depressed quickly and forcefully, maximum brake force is automatically applied.
Operation of brake assist might become apparent by a pulse in the brake pedal and a greater resistance when depressing the brake pedal.
Maintain steady pressure on the brake pedal as long as full braking is required.
Maximum brake force is automatically reduced when brake pedal is released.

Vehicle Stability Assistance System

Anti-Slip Regulator (ASR)

Anti-slip regulation (or traction control) optimises traction by using engine braking and by applying the brakes on the driving wheels to avoid one or more wheels spinning. It also enhances the vehicle's directional stability.
If there is a difference between the vehicle’s trajectory and the path desired by the driver, the dynamic stability control system automatically uses engine braking and the brakes on one or more wheels to return the vehicle to the desired path, within the limits of the laws of physics.
These systems are activated automatically every time the vehicle is started.
These systems are activated in the event of a problem with grip or trajecto-

ry (confirmed by this warning light flashing on the instrument panel)

Deactivation/Reactivation

Deactivation of the ASR system is indicated by this indicator light on the instrument panel coming on and the display of a message.
The ASR system is automatically reactivated every time the ignition is switched off or at speeds over 50 km/h. Reactivation is manual below 50 km/h.

Malfunction

In the event of a malfunction, this warning light lights up on the instrument panel, accompanied by the display of a message and an audible signal.
Have it checked by a dealer or a qualified workshop.

Electronic Stability Control (ESC) and Traction Control system (TC)

Electronic Stability Control (ESC) improves driving stability when necessary, regardless of the type of road surface or tire grip.
As soon as the vehicle starts to swerve (understeer / oversteer), engine output is reduced and the wheels are braked individually.
ESC operates in combination with the Traction Control system (TC). It limits the spinning of the driven wheels.
The TC is a component of the ESC.
Traction Control improves driving stability when necessary, regardless of the type of road surface or tire grip, by reducing the slippage of the driven wheels.
When slippage of at least one wheel is exceeding a certain threshold, engine output is reduced and the wheel spinning the most is braked individually.
This considerably improves the driving stability of the vehicle on slippery road surfaces.

ESC and TC are operational after each engine start as soon as the control indicator extinguishes.
When ESC and TC operate, flashes.
After reconnecting the vehicle battery, the system needs a recalibration by driving a short distance.

⚠ WARNING

Do not let this special safety feature tempt you into taking risks when driving.
Adapt speed to the road conditions.

Deactivation

TC can be deactivated via the Info Display at speeds below 50 km/h.
illuminates in the Driver Information Centre.
A status message appears in the Driver Information Centre when TC is deactivated.
TC can be reactivated via the Info Display. TC is also reactivated the next time the ignition is switched on.

Fault

If there is a fault in the system, the control indicator illuminates continuously and a message appears in the Driver Information Centre. The system is not operational.
Have the cause of the fault remedied by a workshop.

Braking Performance Assistance System

Anti-lock Brake System (ABS) / Electronic Brake Force Distribution (EBFD)

These systems enhance the vehicle's stability and handling during braking, and enable greater control while cornering, particularly on poor or slippery road surfaces.
ABS prevents wheel locking in the event of emergency braking.
Electronic brake force distribution (EBFD) manages overall braking pressure on each individual wheel.

- When braking in an emergency, depress the pedal very firmly and maintain this pressure.

NOTE

Normal operation of the ABS may make itself felt by slight vibrations of the brake pedal.

The fixed illumination of this warning light signals that there is a failure with the ABS.
The vehicle retains conventional braking. Drive carefully at a moderate speed.
This warning light, when lit together with the STOP and ABS warning lights, accompanied by a message and an audible signal, indicates an EBFD malfunction.
You must stop the vehicle.
Stop as soon as it is safe to do so and switch off the ignition.

Anti-lock Brake Warning Light

(ABS) illuminates yellow.
Illuminates for a few seconds after the ignition is switched on. The system is ready for operation when the control indicator extinguishes.
If (ABS) does not extinguish after a few seconds, or if it illuminates while driving, there is a failure in the ABS. The brake system remains operational but without ABS regulation.
If (ABS) illuminates together with (!), a failure with the electronic brake force distribution has been detected.
Stop engine immediately and seek the assistance of a workshop.

Visibility Enhancement Assistance System

Side Blind Spot Alert (SBSA)

The side blind spot alert system detects and reports objects on either side of the vehicle, within a specified blind spot zone. The system displays a visual alert in each exterior mirror, when detecting objects that may not be visible in the interior and exterior mirrors.
Side blind spot alert uses some of the parking assist sensors which are located in the front and rear bumper on both sides of the vehicle.

WARNING

Side blind spot alert does not replace driver vision.
The system does not detect:

- vehicles outside the side blind zones which may be rapidly approaching
- pedestrians, cyclists or animals

Before changing a lane, always check all mirrors, look over the shoulder and use the turn signal.

Activation

The system can be activated via the vehicle settings menu in the Touch Screen.

Functionality

When the system detects a vehicle in the side blind zone while driving forwards, an LED will illuminate in the relevant exterior mirror.
The LED comes on immediately when being passed.
The LED comes on after a delay when passing another vehicle slowly.

Operation conditions

The following conditions must be fulfilled for proper operation:

- all vehicles are moving in the same direction and in adjacent lanes
- the speed of your vehicle is between 12 km/h and 140 km/h
- passing a vehicle with a speed difference of less than 10 km/h
- another vehicle is passing with a speed difference of less than 25 km/h
- the traffic flow is normal
- driving on a straight or slightly curved road
- the vehicle is not pulling a trailer
- the sensors are not covered by mud, ice or snow
- the warning zones in the exterior mirrors or the detection zones on front and rear bumper are not covered

No alert will be given in the following situations:

- in the presence of non-moving objects, e.g. parked vehicles, barriers, street lights, road signs
- in very dense traffic, when moving vehicles might be confused with a stationary object
- with vehicles moving in the opposite direction
- driving on a winding road or a sharp corner
- when passing or being passed by a very long vehicle, e.g. lorry, coach, which is at the same time detected at the rear in the blind spot angle and present in the driver's forward field of vision
- when passing too quickly

Deactivation

The system can be activated via the vehicle settings menu in the Touch Screen.
The state of the system is memorised when switching off the ignition.
The system is deactivated when a plug is connected to the power outlet of the trailer hitch.
Due to adverse weather conditions, such as heavy rain, false detections may occur.

Fault

In the event of a fault, 🔧 illuminates in the instrument panel, accompanied a display message. Seek the assistance of a workshop.

System limitations

The system performance may be affected by:

- covered camera by snow, ice, slush, mud, dirt, or affected by windshield damage or foreign items, e.g. stickers
- heavy or unequally distributed loading
- close vehicles ahead
- banked roads
- winding or hilly roads
- poor lighting conditions
- sudden lighting changes
- dazzling light, e.g. caused by the sun or artificial illumination is shining directly into the camera lens
- adverse environmental conditions, e.g. heavy rain, fog, or snow
- vehicle modifications, e.g. tires
- wrong tire pressure
- roads with poor lane markings

when the vehicle is travelling in a long straight lane on a smooth road surface even if the driver is holding the steering wheel properly.
Deactivate the system if the system is disturbed by tar marks, shadows, road cracks, temporary or construction lane markings, or other road imperfections.

⚠ WARNING

Always keep your attention on the road and maintain proper vehicle position within the lane, otherwise vehicle damage, injury or death could occur. The system may not keep the vehicle in the lane or give an alert, even if a lane marking is detected. The steering of the system may not be sufficient to avoid a lane departure. The system may not detect handsoff driving due to external influences (road condition and surface, weather etc). The driver has full responsibility to control the vehicle and is always required to keep the hands on the steering wheel while driving. Using the system on slippery roads could cause loss of control of the vehicle and a crash. Switch the system off

Passenger Side Camera

The passenger side camera monitors the side of the vehicle.

The camera is mounted at the bottom of the exterior mirror on the passenger side.
The area displayed by the camera is limited. The distance of the image that appears on the display differs from the actual distance.

Camera with view to the rear

The camera shows the blind spot area of the passenger side.

Switching on

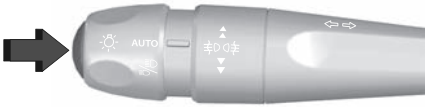

The camera is switched on when the vehicle is running and the passenger side view is selected from the rear view display or by pressing the button on the lever.

Switching off

The camera is deactivated when another view type is selected.

System limitations

The passenger side camera may not operate properly when:

- the surrounding is dark
- the sun or the beam of headlights is shining directly into the camera lenses
- weather limits visibility, such as fog, rain, or snow
- the camera lenses are blocked by snow, ice, slush, mud, dirt.
  Clean the lense, rinse with water, and wipe with a soft cloth
- there are extreme temperature changes
- the passenger door is open

Lane Assistance System

Lane Keeping Assist (LKA)

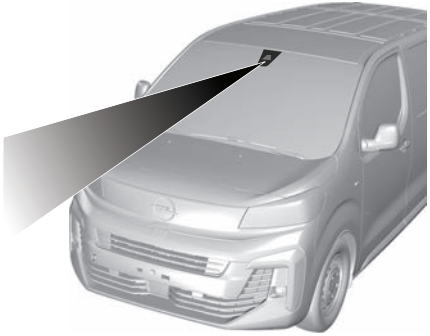

Lane keep assist supports the driver to avoid unintended leaving of the lane. The front camera observes road edges, as well as the lane markings between which the vehicle is driving.
If the vehicle approaches a road edge or a lane marking, the steering wheel is gently turned so that the vehicle turns back into the lane. The driver will notice a turning movement of the steering wheel. Turn steering wheel in same direction, if the system does not steer sufficiently. Turn steering wheel gently into opposite direction, if lane change is intended.

When the system steers to correct the trajectory of the vehicle, flashes yellow in the Driver Information Centre.
Lane keep assist does not continuously steer the vehicle.
Unintended lane departure is not assumed by the system when the turn lights are operated and during few seconds after turn lights have been switched off.
The system will inform the driver with a message and a chime if there is an ongoing correction for more than ten seconds. If the driver is still unable to keep the vehicle in the lane, the correction interrupts after a short time.
When hands-off driving is detected during a correction a warning message appears in the Driver Information Centre, accompanied by a warning chime. Every further hands-off detection prolongs the warning chime duration.
A lane departure warning in the Driver Information Centre alerts when the system cannot hold the vehicle within the lane and immediate driver´s action is required.

NOTE

The system might be inactive if it detects lanes which are too narrow, too wide or too curved.

For a correct operation of the system, the following preconditions have to be fulfilled:

- vehicle speed must be between 65 km/h and 180 km/h
- the turn lights are not activated
- the electronic stability control is activated and not in operation
- no plug is connected to the power outlet of the trailer hitch
- no dynamic driving, i.e. pressure on the brake or accelerator pedal
- lane bounderies can be clearly detected by the system
- no temporary spare wheel is used
- the vehicle is not driven in a tight corner
- no system fault is present which prevents corrections

Depending on version, only lane departure warning system is active, when a system fault is present, a spare wheel used, Electronic Stability Control is not activated or e.g. a trailer is attached.

Unavailability After Battery Disconnection

Lane Keeping Assist can be temporarily unavailable or inactive when the power supply of the vehicle is reconnected again.

Activation

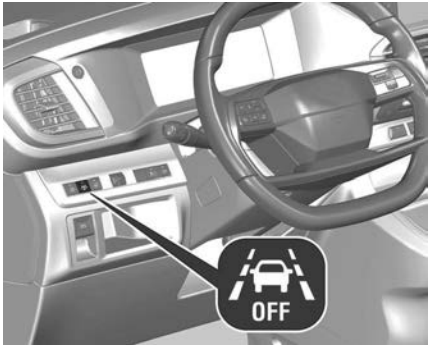

If the system is activated, the LED in the button OFF is not illuminated. To activate the system when the system is deactivated, press OFF.
The system may also be activated in the Info Display via the vehicle settings .

Depending on version, the system is always ON, even if it was deactivated during the last driving cycle.
The system can be activated or deactivated in the vehicle personalization through the vehicle settings .
Due to legal requirements, the system can only be deactivated in the vehicle personalization until the next time the ignition is reactivated.
The system is automatically activated by default every time the engine is started.

NOTE

Depending on version, the system is automatically reactivated at the next engine start.

Deactivation

To deactivate the system, either press OFF until the LED in the button is illuminated or deactivate the system in the Info Display via the vehicle settings .
LKA shall be deactivated by the driver when the vehicle is being towed.

Fault

In the event of a fault, and appear in the Driver Information Centre,

accompanied by a display message and a warning chime. Seek the assistance of a workshop.
If a sensor is covered, illuminates in the Driver Information Centre and a message is displayed indicating that the sensors have to be cleaned.
If the audible warning system does not work properly or is not available, illuminates on the cluster and a message is displayed. Consult a workshop.

System limitations

The system performance may be affected by heavy curves and construction areas.
The system performance may be affected by:

- covered camera by snow, ice, slush, mud, dirt, or affected by windshield damage or foreign items, e.g. stickers
- heavy or unequally distributed loading
- close vehicles ahead
- banked roads
- winding or hilly roads
- poor lighting conditions
- sudden lighting changes
- dazzling light, e.g. caused by the sun or artificial illumination is shining directly into the camera lens
- adverse environmental conditions, e.g.
  heavy rain, fog, or snow
- vehicle modifications, e.g. tires
- wrong tire pressure
- roads with poor lane markings

Lane Departure Warning (LDW)

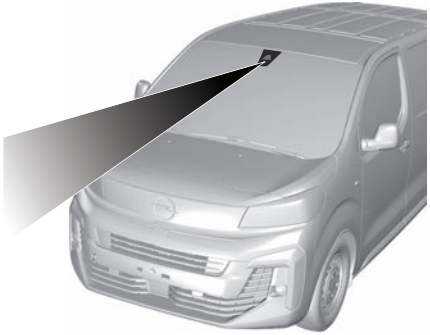

The lane departure warning system supports the driver to avoid unintended leaving of the lane. The front camera observes road edges, as well as the lane markings between which the vehicle is driving. If the vehicle crosses a road edge or a lane marking, the system warns the driver.
Unintended lane departure is not assumed by the system when the turn lights are operated and during few seconds after turn lights have been switched off.
No warning will be issued with a dynamic driving, i.e. pressure on the brake or accelerator pedal or heavy steering.
When the system recognises an unintended lane departure, the control indicator rapidly flashes yellow.

⚠ WARNING

This system is a driving aid that cannot, in any circumstances, replace the need for vigilance on the part of the driver.

For a correct operation of the system, the following preconditions have to be fulfilled:

- vehicle speed must be between approx. 65 km/h and 180 km/h
- the turn lights are not activated
- no dynamic driving, i.e. pressure on the brake or accelerator pedal

- lane boundaries can be clearly detected by the system
- the vehicle is not driven in a tight corner
- no system fault is present which prevents corrections

Activation

If the system is activated, the LED in the button is not illuminated. To activate the system when the system is deactivated, press .
The system may also be activated in the Info Display via the vehicle settings .
Depending on version, the system is always ON, even if it was deactivated during the last driving cycle.

The system can be activated or deactivated in the vehicle personalization through the vehicle settings .
Due to legal requirements, the system can only be deactivated in the vehicle personalization until the next time the ignition is reactivated.
The system is automatically activated by default every time the engine is started.

> **NOTE**
>
> Depending on version, the system is automatically reactivated at the next engine start.

Deactivation

To deactivate the system, either press until the LED in the button is illuminated or deactivate the system in the Info Display via the vehicle settings .
LDW shall be deactivated by the driver when the vehicle is being towed.

Fault

In the event of a fault, and appear in the Driver Information Centre, accompanied by a display message and a warning chime. Seek the assistance of a workshop.

If a sensor is covered, illuminates in the Driver Information Centre and a message is displayed indicating that the sensors have to be cleaned.
If the audible warning system does not work properly or is not available, illuminates on the cluster and a message is displayed. Consult a workshop.

System limitations

The system performance may be affected by heavy curves and construction areas.
The system performance may be affected by:

- covered camera by snow, ice, slush, mud, dirt, or affected by windshield damage or foreign items, e.g. stickers
- close vehicles ahead
- banked roads
- winding or hilly roads
- poor lighting conditions
- sudden lighting changes
- dazzling light, e.g. caused by the sun or artificial illumination is shining directly into the camera lens
- adverse environmental conditions, e.g. heavy rain, fog, or snow
- vehicle modifications, e.g. tires
- roads with poor lane markings

Parking and Reverse Operations Assistance System

Automatic Park Assist

General information

The rear system is deactivated when a plug is connected to the power outlet of the trailer hitch.

⚠ WARNING

The driver bears full responsibility for the parking manoeuvre.
Always check the surrounding area when driving backwards or forwards while using parking assist system.

Rear parking assist

The system warns the driver with audible signals and a display indication against potentially hazardous obstacles behind the vehicle while the reverse gear is engaged.
The system operates with ultrasonic parking assist sensors in the rear bumper.

Activation

After engaging the reverse gear, an audible signal is given from the rear speakers and a display indication will be shown. If no audible signal is given, the display indication is not shown or a warning message appears, the system has a failure.

Deactivation

The system is switched off when reverse gear is disengaged

Indication

As soon as an obstacle gets closer to the vehicle, an audible signal is given and the symbol P⁾⚠ may flash. The interval between the sounds becomes shorter as the vehicle gets closer to that obstacle. When the distance is less than approx. 30 cm, the sound is continuous.

If the vehicle stops for more than three seconds, if the automatic transmission is in P position, or if no further obstacles are detected, no audible signals are given.

ⓘ NOTE

An audible signal is not given if the sound has been muted or if the display of the rear view camera indicated on the Touch Screen has been switched off.

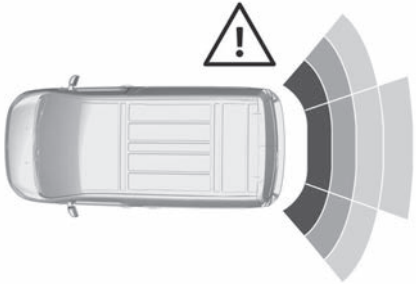

Additionally, the distance to rear obstacles is displayed by changing distance lines in the Touch Screen. When the obstacle is very close, ⚠ for danger is displayed.

Muting the sound / closing the display indication

If the audible signal is muted or the display of the rear view camera is closed

and an obstacle gets closer, only the P)) flashes.
When engaging the forward gear and driving more than 10 km/h the sound and the display are automatically resumed.

Front-rear parking assist

The front-rear parking assist measures the distance between the vehicle and obstacles in front and behind the vehicle. It informs and warns the driver by giving audible signals and display indication.
It uses two different audible signals for the front and rear monitoring areas, each with a different tone frequency.
The system operates with ultrasonic parking sensors in the rear and front bumper.

Activation

When a forward gear has been engaged, the front parking assist is activated, as soon as an obstacle is detected in the front and the speed of the vehicle is below 10 km/h.
When the reverse gear has been engaged, the rear parking assist and the front parking assist are activated.
After engaging the reverse gear, an audible signal is given from the rear speakers and a display indication will be shown. If no audible signal is given, the display indication is not shown or a warning message appears, the system has a failure.

Deactivation

The system is switched off automically when reverse gear is disengaged or when the vehicle speed exceeds 10 km/h.

Indication

As soon as an obstacle gets closer to the vehicle, an audible signal is given and the symbol P)) may flash. The interval between the sounds becomes shorter as the vehicle gets closer to that obstacle. When the distance is less than approx. 30 cm, the sound is continuous.
Audible signals are given via front or rear loudspeakers depending on which detected obstacle is nearest to the vehicle.
If the vehicle stops for more than three seconds, if the automatic transmission is in P position, or if no further obstacles are detected, no audible signals are given.

NOTE

An audible signal is not given if the sound has been muted or if the display of the rear view camera indicated on the Touch Screen has been switched off.

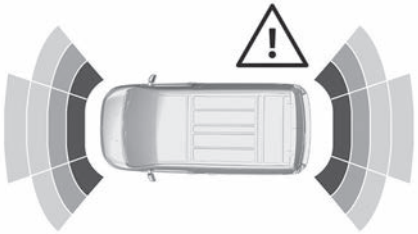

Additionally, the distance to rear and front obstacles is displayed by changing distance lines in the Touch Screen. When the obstacle is very close, ⚠ for danger is displayed.

Muting the sound / closing the display indication

If the audible signal is muted or the display of the rear view camera is closed and an obstacle gets closer, only the P)) flashes.
When engaging the forward gear and driving more than 10 km/h the sound

and the display are automatically resumed.

System limitations

In the event of a fault or if the system does not work temporarily, e.g. because of high external noise level or other interference factors, 🔧 illuminates in the Driver Information Centre. A message is displayed in the Driver Information Centre and a warning chime sounds.
In the case of a permanent fault, seek the assistance of a workshop.

⚠ WARNING

Under certain circumstances, various reflective surfaces on objects or clothing as well as external noise sources may cause the system to fail to detect obstacles.
Special attention must be paid to low obstacles which can damage the lower part of the bumper.

⚠ CAUTION

In the case of a severe failure of the vehicle with the need to stop the vehicle, the system is deactivated.
In the case of a gearbox failure, the parking assist system is not active, when reverse gear is engaged.
In the case of a loudspeaker failure, the audible signals may not be given.
Performance of the system can be reduced when sensors are covered, e.g. by ice or snow.
If a sensor is covered, a message is displayed indicating that the sensors have to be cleaned.
Performance of the parking assist system may be limited or the functionality may not be available at all if 🔧 illuminates or if the image shown on the Info Display is frozen or if the screen is black.
Performance of the parking assist system can be reduced due to heavy loading.
Special conditions apply if there are taller vehicles in the vicinity (e.g. off-road vehicles, mini vans, vans).
Object identification and correct distance indication in the upper part of these vehicles cannot be guaranteed.
Objects with a very small reflection cross-section, e.g. objects of narrow size or soft materials, may not be detected by the system.
Parking assist systems do not detect objects outside the detection range, e.g. below the bumper or underneath the vehicle.
During a reverse parking manoeuvre, the system does not consider a mounted coupling ball bar. The driver has to consider this additional length.

ⓘ NOTE

It is possible that the sensor detects a non-existing object caused by echo disturbance from external acoustic noise or mechanical misalignments (sporadic false warnings may occur).
Make sure that the front number plate is properly mounted (not bent and no gaps to the bumper on the left or right side) and the sensors are firmly in place. The performance of the parking assist may be reduced if the license plate is bent or a license plate support is used.
Low curbs and surface irregularities, e.g. on construction zones, are not

detected by the system. The driver accepts responsibility.

Surround Vision

This system allows views of the vehicle's surroundings to be displayed as a nearly 180° picture in the Touch Screen, like a bird's eye view.

⚠ WARNING

The surround vision system does not replace driver vision. It will not display children, pedestrians, cyclists, crossing traffic, animals, or any other objects outside of the camera view area, e. g. below the bumper, or underneath the vehicle. Do not drive or park the vehicle using only the surround vision system. Always check the surrounding of the vehicle before and during driving. Displayed images may be further or closer than they appear. The area displayed is limited and objects that are close to either edge of the bumper or under the bumper are not displayed on the screen.
Depending on the load of the vehicle, the inclination of the vehicle may be changed including the view of the camera.

The system may use:

- rear camera, installed in the tailgate
- ultrasonic parking assist sensors in the rear bumper

Visualisation on the Info Display

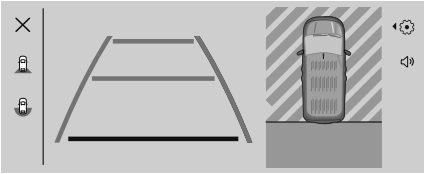

The screen is divided into four areas, from left to right:

- selectable views: standard and 180° view
- view visualisation
- top view
- settings ⚙, muting v and unmuting the audible signal

The parking sensors complete the information on the view from above the vehicle.

Activation

The panoramic view system is activated by:

- engaging the reverse gear when the engine is switched on
- manual activation in the Touch Screen when the vehicle speed is below 16 km/h

Functionality

Different views can be selected in the left part of the display. Change the type of view at any time during a manoeuvre by selecting a view.

- standard view
- 180° view

The display is immediately updated with the type of view selected.
Standard view is enabled by default. This setting can be changed in the settings of the panoramic view system in the Touch Screen.
Depending on version, auto mode is activated by default. In this mode, the system selects the best view, standard or zoom, to display according to the information from the parking sensors.

The state of the system is not kept in memory when the ignition is switched off.

Standard view

The area behind the vehicle is displayed in the screen. The vertical lines represent the width of the vehicle with mirrors unfolded. The direction of the lines changes with the position of the steering wheel.
This view is available in auto mode or in the view selection menu.

Guidelines

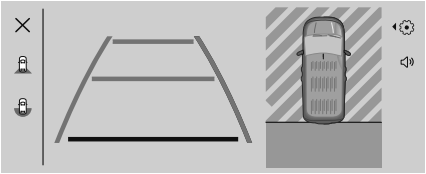

The first horizontal line represents a distance of about 30 cm beyond the edge of vehicle's rear bumper. The upper horizontal lines represent distances of about 1 m and 2 m beyond the edge of your vehicle's rear bumper.

180° view

The 180° view facilitates reversing out of a parking bay, making it possible to see the approach of vehicles, pedestrians and cyclists.
This view is not recommended for carrying out a complete manoeuvre.
This view is available from the view selection menu only.

Zoom view

The camera records the vehicle's surroundings during the manoeuvre in order to reconstruct a view from above the vehicle in its near surroundings. Thus, the vehicle can be manoeuvred around obstacles nearby.
This view is displayed automatically as soon as the vehicle approaches an obstacle during a manoeuvre.

Deactivation

Panoramic view system is deactivated when:

- a certain forward speed is exceeded or, depending on version, if reverse gear is not engaged for seven seconds.
- by pressing the icon ⊗ in the left upper corner of the touch screen.

System limitations

⚠ CAUTION

For optimal operation of the system, it is important to keep the lenses of all cameras always clean. For the rear view camera, there is a washer nozzle which will be activated when the rear window washer is operating.

If manually cleaning the lenses of the cameras, rinse the lenses with water and wipe with a soft cloth.
Do not clean the lenses with a steam-jet or high-pressure jet cleaner.

The surround vision system may not operate properly when:

- the surrounding is dark
- the sun or the beam of headlights is shining directly into the camera lenses
- during nighttime driving
- weather limits visibility, such as fog, rain, or snow
- the camera lenses are blocked by snow, ice, slush, mud, dirt
- the vehicle is towing an electrically connected trailer, bicycle carrier, etc.
- the vehicle had an accident. Contact a workshop.
- there are extreme temperature changes
- the passenger door is open

⚠ CAUTION

It is very important that any repair to the surround vision system is performed accurately according to Manufacturer specifications. Otherwise, the system may not work properly and there is a risk of unexpected behaviour and / or messages from the system.

Rear Vision Camera (RVC)

Depending on version, camera is mounted above the license plate in the tailgate or on the upper part of the left rear door.

⚠ WARNING

The rear vision camera does not replace driver vision. Note that objects that are outside the camera's field of view and the parking assist sensors, e.g. below the bumper or underneath the vehicle, are not displayed.
Do not reverse or park the vehicle using only the rear vision camera. Always check the surrounding of the vehicle before and during driving.

Camera at top of the left rear door

The view of the camera is displayed in the rear view display.

Switching on

The rear vision camera is switched on when the vehicle is running and the rear view is selected from the rear view display or by pressing the button on the lever.
When operating with a trailer, the rear view is still available.

Switching off

The rear vision camera is switched off when the rear view display is switched off.

Camera above the license plate on the tailgate

The camera is mounted in the rear bumper above the number plate.

Activation

Rear view camera is activated when reverse gear is engaged.

Functionality

The area displayed by the camera is limited. The distance of the image that appears on the display differs from the actual distance.

Guidelines

The first horizontal line represents a distance of about 30 cm beyond the edge of vehicle's rear bumper. The upper horizontal lines represent distances of about 1 m and 2 m.
The trajectory lane of the vehicle is shown in accordance with the steering angle.
Depending on version, the outer guidelines can also be static and the gap between both lines represent the vehicle width including the exterior mirrors.The inner curved guidelines represent the maximum steering angle in either direction.

Deactivation

The camera in the rear bumper is deactivated when:

- a plug is connected to the power outlet of the trailer hitch
- a forward speed of 10 km/h is exceeded.
- by pressing the icon ⊗ in the left upper corner of the touch screen.

System limitations

The rear vision camera may not operate properly when:

- surrounding is dark
- sun or beam of headlights is shining directly into camera lenses
- weather limits visibility, such as fog, rain, or snow
- camera lenses blocked by snow, ice, slush, mud, dirt. Clean the lense using the washer nozzle as described.
- the tailgate will be opened
- vehicle is electrically connected to a trailer, bicycle carrier, etc.
- vehicle had a rear end accident
- extreme temperature changes

Driver's Attention Assistance System

The Driver's Attention Assistance System monitores the driving time and the vigilance of the driver. Monitoring the vigilance of the driver is based on the trajectory variations of the vehicle compared to thelane markings.
The system cannot replace the need for vigilance on the part of the driver.
Taking a break is recommended as soon as feeling tired or at least every

two hours. Do not drive when feeling tired.

Activation or Deactivation

Depending on version, the system is automatically active by default every time the engine is started, even if it was deactivated during the last ignition cycle.
The system can be activated or deactivated on the Information Display via the vehicle settings .
When the system is deactivated may illuminate on the cluster.

Driving time alert

The driver gets notified by a pop-up reminder symbol on the cluster simultaneously with an acoustic alert if the driver has not taken a break after two hours of driving at a speed above 65 km/h. The alert is repeated hourly until the vehicle is stopped, no matter how vehicle speed evolves.
The counting of driving time alert is reset when the ignition has been switched off for a few minutes or the driver's seat belt has been unfastened and the driver's door has been opened.
If the vehicle speed drops below 65 km/h, the system is paused. The driving time is counted again once the speed is above 65 km/h.

Driver Drowsiness Detection (DDD)

Depending on version the system uses different cameras to monitor the driver's level of vigilance:

- a front view camera outside the vehicle at the top of the windshield
- a driver monitoring camera inside the vehicle on the driver side next to the windshield facing the driver

WARNING

To avoid risk of eye damage: Do not sit closer than 25 cm to the steering wheel.

Driver Drowsiness Detection with Front View Camera

The system monitors the driver's level of vigilance at speeds above 65 km/h.
The system may perform a learning procedure for up to 30 minutes after the start of the monitoring. During this period, the driver's individual driving behaviour is analysed and no alert is given.
The camera detects variations in trajectory compared to the lane markings.
If the trajectory of the vehicle suggests a certain level of drowsiness or inattention by the driver, an alert is triggered.
In certain driving conditions such as poor road surface or strong winds etc., the system may give alerts independent of the driver's level of vigilance.

Alerting the driver

The driver is alerted by a message, illuminates and an audible signal is given.
After three first level alerts, the system triggers a new alert with a message, accompanied by a more pronounced audible signal and .

Driver Drowsiness Detection with Driver Monitoring Camera

The system monitors the driver's level of vigilance at speeds above 20 km/h.
The system monitors and analyses visual signs of drowsiness or distraction of the driver by monitoring facial, head and eye movements. The system does not record any video nor is it capable of identifying the driver.

The visual signs of drowsiness or distraction may be the following:

- driver diverts his gaze longer or more frequently away from traffic
- eyelids closing or blinking
- microsleep patterns

If the system detects certain facial movements, e.g. a complete closure of the eyes for a certain time, or analyses a certain level of drowsiness or distraction, an alert is triggered.

Alerting the driver

The driver is alerted by a message and an audible signal is given. Additionally illuminates.
If a severe distraction or drowsiness is detected, e.g. microsleep, sleep events, the driver is alerted immediately by a message accompanied by and a more pronounced audible signal.
Drowsiness and microsleep alerts will only occur after a couple of minutes of driving and above a certain vehicle speed.

Reinitialisation

Depending on version, the driver drowsiness and distraction detection is reinitialised in the following situations:

- the ignition has been switched off for a few minutes
- the speed remains below 65 km/h for a few minutes
- the driver's seat belt has been unfastened and the driver's door has been opened
- the driver has changed
- the system is reselected

System limitations

In the following situations, the system with front camera may not operate properly or even not operate at all:

- poor visibility caused by inadequate lighting of the roadway, falling snow, heavy rain, dense fog etc. dazzle caused by headlights of oncoming vehicles, low sun, reflections on damp roads, leaving a tunnel, alternating shade and light etc.
- no lane markings detected or multiple lane markings due to roadworks
- close vehicles ahead
- winding roads or narrow roads
- advanced lane keeping assist is active
- front view camera covered by snow, ice, slush, mud, dirt, or affected by windshield damage or foreign items, e.g. stickers

In the following situations, the system with driver monitoring camera may not operate properly or even not operate at all:

- driver monitoring camera covered by dirt or foreign items, e.g. stickers
- the driver is wearing sunglasses with an infrared transmittance of less than 70%

Fault

If the system has a fault, illuminates on the cluster, a message is displayed and an audible signal is given. Consult a workshop.
illuminates on the cluster accompanied by a message indicating that the camera may be covered. Stop the vehicle and check, if the camera needs to be cleaned.
If still illuminates after cleaning the camera, consult a workshop.
illuminates on the cluster accompanied by a message indicating that the

driver's face was not detected by the driver monitoring camera due to e.g. sunglasses.

Offroad and Low-Range Operations Assistance System

Hill Descent Control (HDC)

The descent control system allows the vehicle to travel at a low speed without depressing the brake pedal.
The vehicle will automatically decelerate to a low speed and remain at that speed when the system is activated.
Some noise or vibration from the brake system may be apparent when the system is active

⚠ CAUTION

Use only when descending steep grades while driving off-road. Do not use when driving on normal road surfaces. Unnecessary usage of the descent control system, such as while driving on normal roads, may damage the brake system and the ESC function.

Activation

ⓘ NOTE

The system activates in the case of slopes with a decline greater than five percent. The system can be used with the gearbox in neutral. Otherwise, select a gear corresponding to the speed to prevent the enging from stalling. For vehicles with automatic transmission or BEVs, the system can be used with the selector lever in position N, D or R.

At speeds below approx. 50 km/h, press . The system can also be activated when the vehicle is stationary with the engine running.
The control indicator in the instrument cluster is illuminated in green to show the system is activated.
When the vehicles starts its descent, the system controls the speed of the vehicle; accelerator and brake pedals can be released.

- If the gearbox is in first or second gear, the speed decreases and the control indicator in the instrument cluster flashes rapidly.
- If the gearbox is in neutral or the clutch pedal is depressed, the speed decreases and the control indicator in the instrument cluster flashes slowly.

If the system is operating, the brake lights automatically come on.
If the speed exceeds 30 km/h, regulation is paused. The indicator light in the instrument cluster changes to grey. However, the LED of the button is still illuminated.
Regulation is automatically resumed if the speed falls below 30 km/h, the slope is greater than 5% and the pedal release conditions are met.

Deactivation

Press again until the LED in the button extinguishes. The green control indicator in the instrument cluster extinguishes, too.
If the speed exceeds 70 km/h, the system is automatically deactivated.
The LED in the button estinguishes.

Fault

If the green control indicator does not illuminate or flash after pressing the button, there is a fault in the system. Seek the assistance of a workshop.

Hill Start Assist (HSA)

This system keeps the vehicle briefly stationary (for approximately 2 seconds) when making a hill start, while you transfer your foot from the brake pedal to the accelerator pedal.
The system is only active when:

- The vehicle is completely stationary, with your foot on the brake pedal.
- Certain slope conditions are met.
- The driver's door is closed.

⚠ WARNING

Do not leave the vehicle while it is being held temporarily by hill start assist.

If someone needs to get out of the vehicle with the engine running, apply the parking brake manually. Then check that the parking brake indicator and the P indicator in the electric parking brake control illuminate steadily.

⚠ WARNING

The hill start assist function cannot be deactivated. However, using the parking brake to immobilise the vehicle interrupts its operation.

Operation

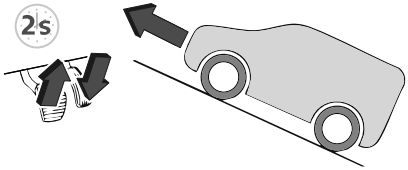

Facing uphill, with the vehicle stationary, the vehicle is held for a short time when the driver releases the brake pedal:

- If first gear or neutral is engaged on a manual gearbox.
- If mode D or M is selected on an automatic gearbox.
- If mode D is selected on the drive selector.

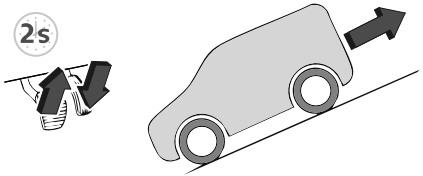

Facing downhill, with the vehicle stationary and reverse gear engaged, the vehicle is held for a short time when the driver releases the brake pedal.

Fault

If the event of a malfunction, these warning lights illuminate steadily on the instrument panel, accompanied by the display of a message.
Have it checked by a dealer or a qualified workshop.

Utility Assistance Features

Traffic Sign Assist (TSA)

⚠ WARNING

The actual traffic sign always takes priority over the traffic sign displayed in the Driver Information Centre.

Depending on version, are two different systems available.

Speed limit system 1

Using the camera at the top of the windshield and the vehicle's integrated navigation system, this system provides speed limits and end of speed limits in the Driver Information Centre.
This system can be activated or deactivated in the vehicle personalisation.

If the system is activated but does not detect a speed limit sign, the following sign is displayed:

If the vehicle exceeds the speed limit by at least 5 km/h, the speed limit displayed flashes about ten seconds.

Updating navigation map data

To maintain the performance of the system, the navigation map should be updated in periodical intervals. A navigation map update is available twice per year.
Further information is available in the Infotainment system section.

Speed limit system 2 (compliant with the European General Safety Regulation)

This system displays permanently speed limit information in the Driver Information Centre independent of vehicle speed.

Providing the speed limit information involves the following systems, depending on version:

- camera at the top of the windshield
- vehicle's integrated navigation system
- telematics service

If travelling on a road with no speed restrictions, e.g., on German motorways, the following sign is displayed:

If no speed limit information can be provided, the following sign is displayed:

If a new speed limit is provided, a confirmation chime is given. The confirmation chime can be activated / deactivated on the Touch Screen.

If driving at a speed of at least 20 km/h and exceeding the speed limit, the speed limit displayed in the Driver Information Centre flashes after some time and an audible signal is given after some time. Time of occurrence varies. Both flashing and audible signal are terminated after a few seconds. Due to legal requirements, the audible signal can only be deactivated until the next time the ignition is switched on. The deactivation can be done via the Touch Screen or via shortcut 3x if configured in the vehicle settings. If the audible signal is deactivated, illuminates for a few seconds.
In case of a failure, illuminates permanently. Consult a workshop.

Operation conditions

To provide country-specific speed limit information, the vehicle needs to identify the country it is currently in. If a corresponding country list is available in the Touch Screen, the respective country has to be selected manually. Otherwise, the country is automatically selected.
To get valid speed limit information, the vehicle's current position is sent via the telematics unit and is immediately deleted after processing.

Tracking of the vehicle position is not possible at any time.

NOTE

It is possible to report a permanent speed limit misinformation on our website.

Updating data

To maintain the performance of the system, the vehicle software and the navigation map should be updated in periodical intervals.
A navigation map update is available at least once per year. Further information is available in the Infotainment system section.
For vehicle software update consult a workshop.

Other traffic signs

The system detects traffic signs and displays them in specific page of the Driver Information Centre.

This system can be activated or deactivated in the vehicle personalisation.

System limitations

Traffic sign assistant may not operate properly when:

- Driving on winding or hilly roads.
- Driving with snow chains.
- The area of the windshield, where the front camera is located, is not clean or affected by foreign items, e.g. stickers.
- The visibility is limited because of the weather, such as fog, rain, or snow.
- The vehicle ahead is creating road spray.
- Dazzling light, e.g. caused by the sun or artificial illumination is shining directly into the camera lens.
- Speed limitation is painted on the surface of the road.
- Traffic signs are completely or partially covered or difficult to discern.
- Traffic signs are incorrectly mounted or damaged or have been removed.
- Traffic signs do not comply with the Vienna Convention on Road Signs and Signals.
- Depending on version, the navigation map data may be outdated.

⚠ CAUTION

The system is intended to help the driver within a defined speed range to recognise certain traffic signs. Do not ignore traffic signs which are not displayed by the system.
Do not let this special feature tempt you into taking risks when driving. Always adapt speed regarding road, traffic and weather conditions.
The driver assistance systems do not relieve the driver from full responsibility for vehicle operation.
When driving abroad make sure the vehicle uses the speed unit of the respective country. If necessary, select the correct units in the Info Display.

Tire Pressure Monitoring System (TPMS)

This system alerts the driver if one or more tires suffer a drop in pressure. The alert is raised when the vehicle is moving, not when stationary.
It compares the information given by the wheel speed sensors with reference values, which must be reinitialised every time the tire pressures are adjusted or a wheel changed.
It takes into account the last values stored during the reinitialisation request. It is therefore essential that the tire pressure is correct during the operation. This operation is the driver's responsibility.

⚠ WARNING

The tire under-inflation detection cannot, in any circumstances, replace the need for vigilance on the part of the driver.
This system does not avoid the need to regularly check the tire pressures (including the spare wheel), especially before a long journey.
Driving with under-inflated tires, particularly in adverse conditions (heavy load, high speed, long journey):

- worsens road-holding.
- lengthens braking distances.
- causes premature wear of the tires.
- increases energy consumption.

⚠ WARNING

Checking tire pressures

This check should be done monthly when the tires are "cold" (vehicle stopped for 1 hour or after a journey of less than 10 km at moderate speeds).
Otherwise, add 0.3 bar to the pressures shown on the label.

ⓘ NOTE

The inflation pressures defined for the vehicle can be found on the tire pressure label.
For more information on the Identification markings, refer to the corresponding section.

ⓘ NOTE

Snow chains

The system does not have to be reinitialised after fitting or removing snow chains.

NOTE

Spare wheel

The steel spare wheel does not have an under-inflation detection sensor.

Under-inflation alert

This is signalled by the fixed illumination of this warning light (!), accompanied by an audible signal and, depending on equipment, the display of a message.

1. Reduce speed immediately, avoid excessive steering movements and avoid sudden braking.
2. Stop the vehicle as soon as it is safe to do so.
3. Using a compressor, such as the one in the tire repair kit, check and adjust the pressures of all four tires when cold.
4. If it is not possible to do this check, drive carefully at reduced speed.
5. In the event of a puncture, use the tire repair kit or the light (depending on equipment).

WARNING

The loss of pressure detected may not always cause visible deformation of the tire.
Do not rely on just a visual check.

WARNING

Driving too slowly may not ensure optimum monitoring.
The alert is not immediately triggered in the event of a sudden loss of pressure or tire blow-out. This is because analysis of the values read by the wheel's speed sensors can take several minutes.
The alert may be delayed at speeds below 40 km/h, or when adopting a dynamic driving style.

NOTE

The alert is kept active until the system is reinitialised.

Reinitialisation

The system must be reinitialised after any adjustment to the pressure of one or more tires, and after changing one or more wheels.

WARNING

Before reinitialising the system, make sure that the pressures of the four tires are correct for the conditions of use of the vehicle and conform to the values written on the tire pressure label.
Check the pressures of the four tires before performing the reinitialisation.
The system does not advise if a pressure is incorrect at the time of reinitialisation.

With the vehicle stationary, the system can be reinitialised via the Displays the menu for the driver assistant systems .

Malfunction

In the event of a malfunction, these warning lights (!) illuminate steadily on the instrument panel.
In this case, the Tire Pressure Monitoring System function is no longer performed.
Have it checked by a dealer or a qualified workshop.

IN CASE OF EMERGENCY

Hazard Warning Lights

Activating Hazard Warning Lights

Pressing this red button ⚠ causes all the direction indicators to flash.
They can work with the ignition switched off.

Automatic Hazard Warning Lights

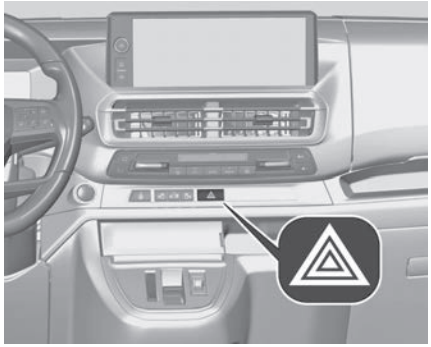

When braking in an emergency, depending on the rate of deceleration, the hazard warning lights come on automatically. They switch off automatically when you next accelerate.
They can be switched off by pressing the button.

Assist And SOS

NOTE
In order to be available and operational, the system requires funcioning vehicle electric, moblie service and GPS or GLONASS satellite link. Depending on equipment, a back up a battery is used.

2

1

1 ASSISTANCE

2 eCall (SOS)

Privacy mode can be configured in the Settings menu on the touch screen.

Emergency Call (eCall)

The emergency call function will establish a connection to the nearest public safety answering point (PSAP).
A minimum set of data including vehicle and location information will be sent to the PSAP.

NOTE
The eCall (SOS) system is a public service of general interest and is free-of-charge.

Operation of the system

- Upon switching on the ignition, the indicator light illuminates red, then green, and then goes out: the system is operating correctly.
- The indicator light flashes red: replace the back-up battery.
- The indicator light is fixed red: system malfunction. The emergency and assistance call services may not work.

- If the indicator light does not come on when the ignition is switched on, this also means that there is a system malfunction.

If the problem persists, contact a qualified workshop as soon as possible.

NOTE

A system malfunction does not prevent the vehicle from being driven.

NOTE

When an onboard system update is being performed, the eCall (SOS) function is not available.

NOTE

Data processing. All processing of personal data by the eCall (SOS) function complies with the framework for protection of personal information established by Regulation 2016/679 (General Data Protection Regulation - GDPR) or by UK GDPR (Data Protection, Privacy and Electronic Communications) Regulations 2019 and Directive 2002/58/EC of the European Parliament and the Council, and in particular, seeks to protect the vital interests of the data subject, in accordance with Article 6 (1) d) GDPR.

The processing of personal data is strictly limited to the purpose of handling the eCall (SOS) function used with the "112" single European emergency call number.
The eCall (SOS) function is only able to collect and process the following data relating to the vehicle: vehicle identification number, vehicle type (passenger vehicle or light commercial vehicle), fuel type or power source, three most recent locations and direction of travel, number of passengers and a timestamped log file of the automatic activation of the system and its timestamp.
The recipients of the processed data are the emergency call handling centres designated by the relevant national authorities in the territory in which they are located, enabling priority routing and handling of calls to the "112" emergency number.

For more information on eCALL and Personal Data: Customer Information ⇨ 286.

NOTE

Data storage. Data contained in the system's memory is not accessible from outside the system until a call is made. The system is not traceable and is not continuously monitored in its normal operating mode.

The data in the system's internal memory is automatically and continuously erased. Only the vehicle's three most recent locations, necessary for the normal functioning of the system, are stored.
When an emergency call is triggered, the data log is stored for no more than 13 hours.

NOTE

Access to data. You have the right of access to data and as appropriate to request the rectification, erasure or restriction of processing of any personal data not processed in accordance with the provisions

of GDPR. Third parties to which data has been disclosed shall be notified of any rectification, erasure or restriction carried out in compliance with the corresponding GDPR, unless it proves impossible or involves a disproportionate effort.

You also have the right to lodge a complaint with the respective data protection supervisory authority.
If you want to claim your above-mentioned rights please contact us per email at: privacyrights@stellantis.com.
For more information regarding our contact details please take a look at our Privacy & Cookies Policy on the brand's website.

Manual Emergency Call

In case of an emergency, press the red SOS button in the overhead console for more than two seconds.
The LED flashes green to confirm that a connection to the nearest PSAP is being established. The LED illuminates steadily as long as the call is active.
Pressing the SOS button immediately a second time will terminate the call.
The LED switches off.

Automatic Emergency Call

Automatic crash notification

In case of an accident with airbag deployment and without damage of needed hardware, an automatic emergency call is established and an automatic crash notification will be transmitted to the next PSAP.

Assistance Call

If the vehicle breaks down, press button (1) for more than 2 seconds to request assistance. A voice message will confirm that a connection is being established.

NOTE

Privacy mode allows you to manage the level of sharing (data and/or location) between your vehicle and dealer.

It can be configured in the Settings touch screen menu or application, depending on the audio equipment.

By default, depending on equipment, deactivate/reactivate geolocation by simultaneously pressing the 2 buttons, then press the "ASSISTANCE" button to confirm.

NOTE

Language depends on the geographic coverage of the eCall And Assistance Call systems and the system language of the vehicle.

NOTE

If you purchased your vehicle outside the dealer network, you are invited to have a dealer check the configuration of these services and, if desired, modify it as required. In a multilingual country, services can be configured to use the official national language of your choice.

NOTE

For technical reasons and in particular to improve the quality of telematics services provided to customers, the Manufacturer reserves the right to carry out updates to the vehicle's

on-board telematics system at any time.

NOTE

During an update to the vehicle's on-board telematics system, the ASSISTANCE system will be unavailable.

Warning triangle

Warning Triangle Kit

This reflective and dismantable device is to be installed on the side of the road when a vehicle is broken down or damaged.

WARNING

Before getting out of the vehicle. Turn on the hazard warning lamps, then put on the safety vest to assemble and install the triangle.

Assembling The Triangle

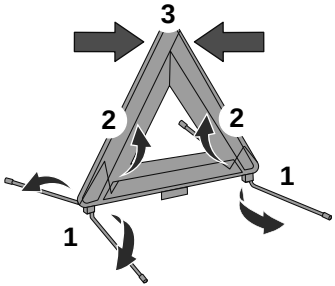

For versions supplied with a triangle as original equipment, refer to the illustration above.
For other versions, refer to the assembly instructions provided with the triangle.

Placing The Triangle

Put the triangle in place behind the vehicle, as required by local legislation.

Jacking the Vehicle and Wheel Changing

Wheel Changing Toolkit

Set of tools supplied with the vehicle

The tool box is located under the left-hand front seat.

WARNING

The tool kit is specific to the vehicle and may vary depending on version. Do not use it for any other purposes.

Access the tools (ICE or BEV)

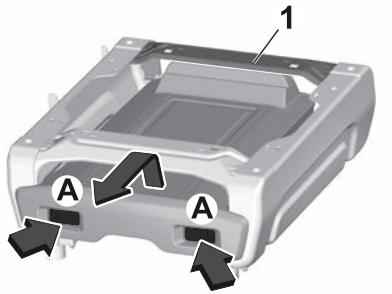

1. Press latches A and slide them inwards to release the box.

2. To take it past bar 1, raise the box slightly then pull it as far as it will go.
3. Then, lift the box upwards to take it past bar 2.

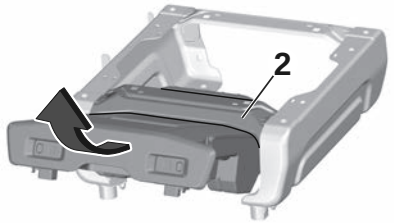

Vehicles with spare wheel

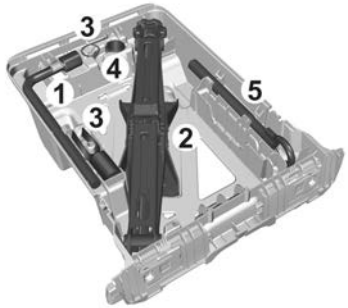

The box contains:

1 Wheel wrench
For removing the wheel bolts and raising/ lowering the jack.

2 Jack
Used to raise the vehicle.

3 Wheel bolt cover/wheel trim removal tool
Depending on the vehicle's equipment, this removes the wheel bolt covers on alloy wheels or the wheel trim on steel wheels.

4 Socket for the "security" wheel bolts
For adapting the wheelbrace to the special "security" bolts.

5 Towing eye

Jacking instructions (Australia version)

- The jack should be used on level firm ground wherever possible.
- It is recommended that the wheels of the vehicle be chocked, and that no person should remain in a vehicle that is being jacked.
- No person should place any portion of their body under a vehicle that is supported by a jack.

⚠ WARNING

The jack must only be used to change a wheel with a damaged or punctured tire.
Do not use any jack other than the one supplied with the vehicle.
If the vehicle does not have its original jack, contact a dealer or a qualified workshop to obtain the one that was intended by the Manufacturer.
The jack meets European standards, as defined in the Machinery Directive 2006/42/ CE, and also complies with UKCA requirement, as defined by the Supply of Machinery (Safety) Regulations 2008 No.1597.
The jack does not require any maintenance.

Vehicles without spare wheel

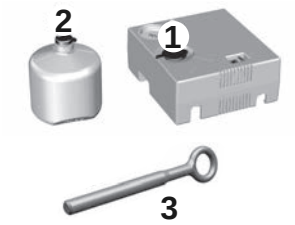

1 12 V compressor and speed limit sticker
For adjust the tire pressure.

2 Cartridge of sealant
For temporary repair of a tire and to adjust the tire pressure.

3 Removable towing eye and tool to open the front and rear protective covers (depending on equipment).

Spare Wheel

The spare wheel is located in a holder beneath the vehicle floor.

Wheel Removal / Installation

1. Park the vehicle on a level, firm and non-skid surface. The front wheels must be in the straightahead position.
2. No people or animals may be in the vehicle when it is jacked-up.
3. Steel wheel rims with cover:
Pull off the wheel cover with the designated tool.
Alloy wheel rims: Disengage wheel bolt caps with the designated tool.

4. Attach the wheel wrench and loosen each wheel bolt by half a turn.
The wheels might be protected by security wheel bolts. To loosen these specific bolts, attach the adapter onto the head of the bolt before installing the wheel wrench. The adapter is located in the tool box

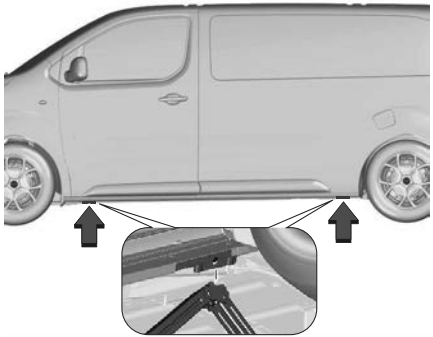

5. Ensure the jack is correctly positioned under the relevant vehicle jacking point. Position it directly below the jacking point in a manner that prevents it from slipping.
6. With the jack correctly aligned, jack up until wheel is clear of the ground.
7. Unscrew the wheel bolts
8. Change the wheel.
9. Screw on the wheel bolts.
10. Lower the vehicle and remove jack.

11. Install the wheel wrench ensuring that it is located securely and tighten each bolt in a crosswise sequence. Tightening torque is 115 Nm.
    If the vehicle is equipped with alloy wheel rims, note that the wheel bolts can also be used for the steel spare wheel. In this case, the spare wheel is secured by the conical contact of each bolt.
12. Align the valve hole in the wheel cover with the tire valve before installing.
    Install wheel bolt caps.
13. Stow the replaced wheel, the vehicle tools and the adapter for the security wheel bolts.
14. Check the tire pressure of the installed tire and the wheel bolt torque as soon as possible.

After Wheel Changing

WARNING

With a non-standard or 'space-saver' spare wheel

Deactivate certain driving aid functions (Active Safety Brake, Adaptive cruise control, etc.).
Do not exceed the maximum authorized speed of 50 mph (80 km/h) or the maximum distance of 125 miles (200 km).
Driving with more than one spare wheel of this type is prohibited.
The wheel trim from the replaced wheel must not be refitted.

WARNING

Go to a dealer or a qualified workshop.
Have the tightening of the spare wheel's bolts and its tire pressure checked.
Have the punctured tire examined.
After inspection, the technician will advise you on whether the tire can be repaired or if it must be replaced.

Tire Repair Kit

Tire Repair Toolkit

Made up of a compressor and a sealant cartridge, it allows you to carry out a temporary repair of the tire so that you can drive to the nearest garage.

It is designed to repair most punctures located on the tire tread.
Minor damage to the tire tread can be repaired with the tire repair kit.

NOTE

Damage which is either located on the tire wall or larger than 4 mm cannot be repaired using this type of kit.

NOTE

The vehicle electric system allows the connection of the compressor to the 12 V power supply for long enough to repair a tire after a puncture.

⚠ WARNING

Do not drive faster than 80 km/h.
Do not use for a lengthy period.
Steering and handling may be affected.

In the case of a flat tire apply the parking brake and engage first gear, reverse gear or P.

The tire repair kit is located in a bag in the passenger door compartment.

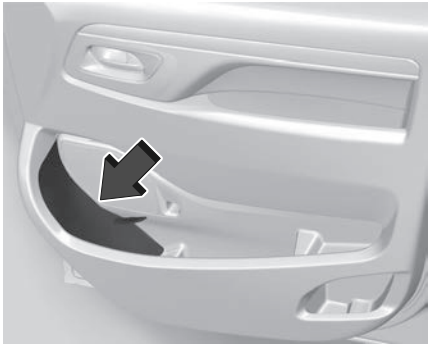

Tire Repair Procedure

⚠ WARNING

Do not remove any foreign body (e.g. nail, screw) which has penetrated the tire.

⚠ WARNING

Take care, the sealant product is harmful if swallowed and causes irritation to the eyes.
Keep this product out of the reach of children.
The use-by date of the fluid is marked on the bottle.

1. Remove the sealant bottle and the compressor.
2. Pull speed limit label from sealant bottle and place it in driver's visible area.

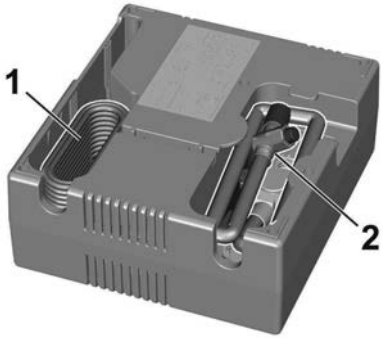

3. Remove the electrical connection cable (1) and air hose (2) from the stowage compartments on the underside of the compressor.

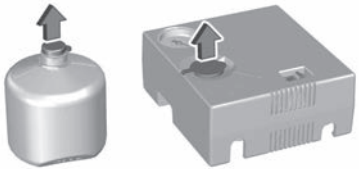

4. Open sealant bottle and lift the lid.

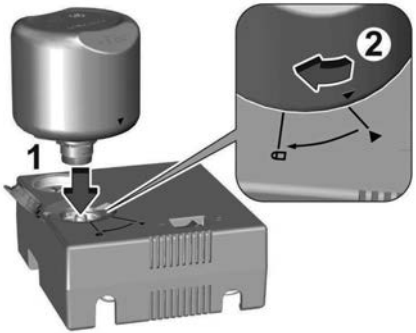

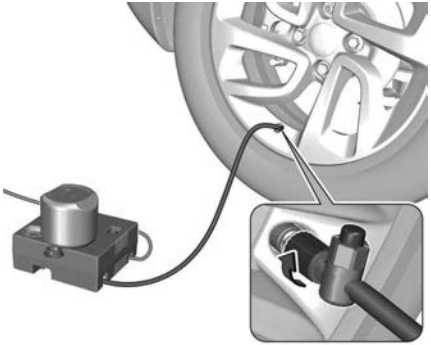

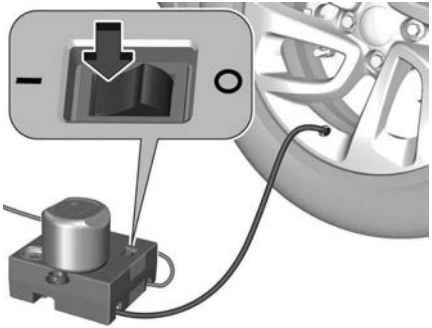

5. First, insert sealant bottle into the compresor and align the triangle symbols (1). Then, push down sealant bottle and turn it to the lock position (2).
6. Set the compressor near the tire in such a way that the sealant bottle is upright.
7. Unscrew valve cap from defective tire.
8. Screw the filler hose to the tire valve.
9. The switch on the compressor must be set to ○ .
10. Connect the compressor plug to the 12 V power outlet or cigarette lighter socket.
    To avoid discharging the vehicle battery, we recommend to use the tire repair kit only when the combustion engine is running or when the electric engine is ready
11. Set the rocker switch on the compressor to ▌. The tire is filled with sealant.
12. The compressor pressure gauge briefly indicates up to 600 kPa (6 bar) whilst the sealant cartridge is emptying (approx. 30 s). Then the pressure starts to drop.
13. All of the sealant is pumped into the tire. Then the tire is being inflated.

14. The prescribed tire pressure should be obtained within ten minutes.
When the correct pressure is obtained, switch off the compressor.
If the prescribed tire pressure is not obtained within ten minutes, remove the tire repair kit. Move the vehicle one tire rotation. Reattach the tire repair kit and continue the filling procedure for ten minutes. If the prescribed tire pressure is still not obtained, the tire is too badly damaged. Seek the assistance of a workshop.

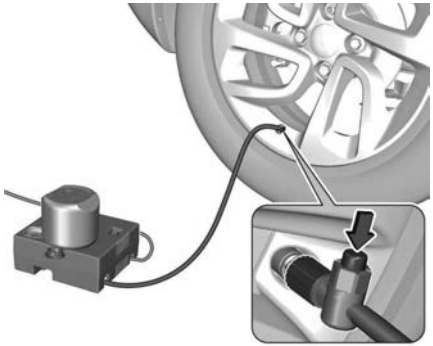

15. Drain excess tire pressure with the button on the air hose.
Do not run the compressor longer than ten minutes.

16. Detach the tire repair kit. Remove sealant bottle from compressor. Screw the filler hose to the free connection of the sealant bottle. This prevents sealant from escaping. Stow tire repair kit.

17. Remove any excess sealant using a cloth.

18. Continue driving immediately so that sealant is evenly distributed in the tire. Drive between 20 km/h and 60 km/h. After driving approx. 5 km but no more than ten minutes, stop and check tire pressure. Screw compressor air hose directly onto tire valve when doing this.

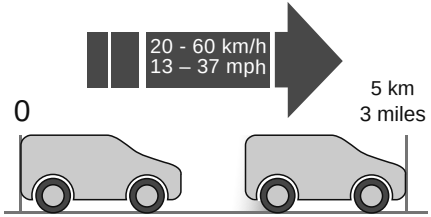

Fill tire as described before. Drain excess tire pressure with the button on the air hose. If tire pressure hasn't decreased under 200 kPa (2 bar), set it to the correct value. Otherwise the vehicle must not be used. Seek assistance of a workshop. Repeat the checking procedure once more after driving further 10 km but no more than ten minutes to check that there is no more loss of pressure. If the tire pressure has fallen below 200 kPa (2 bar), the vehicle must not be used. Seek the assistance of a workshop.

19. Stow away tire repair kit.

NOTE

The compressor can also be used, without injecting sealant, to check and adjust the tire pressures.

NOTE

The driving characteristics of the repaired tire are severely affected, therefore have this tire replaced.
If unusual noise is heard or the compressor becomes hot, turn compressor off for at least 30 min.
The built-in safety valve opens at a pressure of 700 kPa (7 bar).
Note the expiry date of the kit. After this date its sealing capability is no longer guaranteed. Pay attention to storage information on sealant bottle.
Replace the used sealant bottle. Dispose of the bottle as prescribed by applicable laws.
The compressor and sealant can be used from approx. -30 °C.

Checking-Adjusting Tire Pressure

The compressor can be used, without injecting sealant, to check and, if necessary, adjust the tire pressures.

1. Remove the valve cap from the tire and keep it in a clean place.
2. Uncoil the pipe stowed under the compressor.
3. Screw the pipe onto the valve and tighten firmly.
4. Check that the compressor switch is in position "0".
5. Fully uncoil the electric cable stowed under the compressor.
6. Connect the compressor's electric plug to the vehicle's 12 V socket.
7. Switch the ignition on.
8. Start the compressor by placing the switch at position "I" and adjust the pressure to the value shown on the vehicle's tire pressure label. To deflate: press the black button located on the compressor pipe, near the valve connection.
9. Once the correct pressure is reached, put the switch in position "0".
10. Remove the kit and stow it.
11. Refit the cap on the valve.

WARNING

If after approximately 7 minutes, the pressure of 2 bar is not reached, this indicates that the tire is not repairable; contact a dealer or a qualified workshop for assistance.

WARNING

Should the pressure of one or more tires be adjusted, it is necessary to reinitialise the under-inflation detection system.

For more information on Tire under-inflation detection, refer to the corresponding section.

Jump Starting

If the vehicle's 12 V Battery is flat, the engine can be started using a backup battery (either external or from another vehicle) and jump leads or using a battery booster.
Before handling the 12 V Battery, always observe the safety symbols printed on the battery label.

These batteries contain harmful substances (sulphuric acid and lead).
They must be disposed at authorized dealer/ battery shop in accordance with regulations and must never under any circumstances be discarded with household waste.
Take used remote control batteries and vehicle batteries to a special collection point.

WARNING

Protect your eyes and face before handling the battery.
All operations on the battery must be carried out in a well ventilated area and away from naked flames and sources of sparks, to avoid any risk of explosion or fire.
Wash your hands afterwards.

BEV recommendation

NOTE

Flat 12 V battery

It is no longer possible to start the motor or recharge the traction battery.

WARNING

Precautions before working on the accessory battery

Select mode P, switch off the ignition, check that the instrument panel is off and that the vehicle is not being charged.

WARNING

Jump-starting another vehicle

Do not use the 12 V battery to jump-start another vehicle or to charge another vehicle's battery.

Starting Using Another Vehicle Battery

Do not start with quick charger.

A vehicle with a discharged vehicle battery can be started using jump leads and the vehicle battery of another vehicle.

CAUTION

Only jump start another vehicle with an ICE vehicle.

WARNING

Be extremely careful when starting with jump leads. Any deviation from the following instructions can lead to injuries or damage caused by battery explosion or damage to the electrical systems of both vehicles.

WARNING

Avoid contact of the battery with eyes, skin, fabrics and painted surfaces. The fluid contains sulphuric acid which can cause injuries and damage in the event of direct contact.

- Never expose the vehicle battery to naked flames or sparks.

- A discharged vehicle battery can already freeze at a temperature of 0 °C. Defrost the frozen battery before connecting jump leads.
- Wear eye protection and protective clothing when handling a battery.
- Use a booster battery with the same voltage (12 V). Its capacity (Ah) must not be much less than that of the discharged vehicle battery.
- Use jump leads with insulated terminals and a cross section of at least 16 mm^2 (25 mm^2 for diesel engines).
- Do not disconnect the discharged vehicle battery from the vehicle.
- Switch off all unnecessary electrical consumers.
- Do not lean over the vehicle battery during jump starting.
- Do not allow the terminals of one lead to touch those of the other lead.
- The vehicles must not come into contact with each other during the jump starting process.
- Apply the parking brake, transmission in neutral, automatic transmission in P.

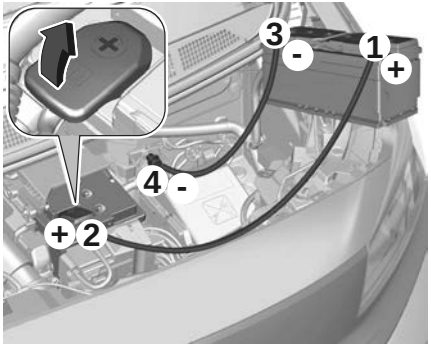

Open the positive terminal protection caps of both vehicle batteries.

Lead connection order

1. Connect the red lead to the positive terminal of the booster battery (1).
2. Connect the other end of the red lead to the positive terminal of the discharged battery

   (2).
3. Connect the black lead to the negative terminal of the booster battery (3).
4. Connect the other end of the black lead to a vehicle grounding point of your vehicle in the engine compartment (4).

Route the leads so that they cannot catch on rotating parts in the engine compartment.

To start the engine

1. Start the engine of the vehicle providing the jump.
2. After five minutes, start the other engine. Start attempts should be made for no longer than 15 s at an interval of 1 min.
3. Allow both engines to idle for approx. three minutes with the leads connected.
4. Switch on electrical consumers e.g. headlights, heated rear window of the vehicle receiving the jump start.
5. Reverse above sequence exactly when removing leads.

Starting Another Vehicle

Procedure for starting another vehicle is identical to the procedure of "Starting Using Another Vehicle Battery", under the point of view of the assisting vehicle.

⚠ WARNING

Ensure the supplying battery is fully charged and in optimal operating conditions.

⚠ WARNING

Always check in advance for leaks, cracks or any evident sign of damage on the flat battery before proceeding.

12 V Battery Charger

For optimum service life of the battery, it is essential to maintain an adequate state of charge.
In some circumstances, it may be necessary to charge the battery:

- When using the vehicle mainly for short journeys.
- If the vehicle is to be taken off the road for several weeks.

Consult a dealer or a qualified workshop.

⚠ CAUTION

To charge the vehicle's battery yourself, use only a charger compatible with lead-acid batteries with a nominal voltage of 12 V.

⚠ CAUTION

Follow the instructions provided by the manufacturer of the charger. Never reverse polarities.

ⓘ NOTE

It is not necessary to disconnect the battery.

1. Switch the ignition off.
2. Switch off all electrical consumers (audio system, lighting, wipers, etc.).

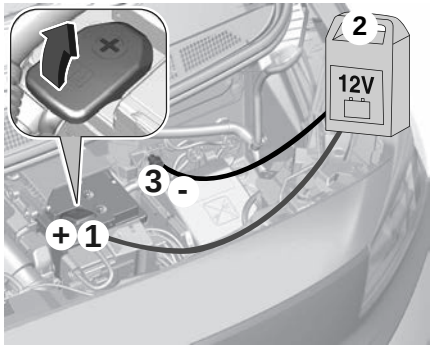

3. Switch off charger (2) before connecting the cables to the battery, so as to avoid any dangerous sparks.
4. Ensure that the charger cables are in good condition.
5. Lift the plastic cover on the (+) terminal, if the vehicle has one.
6. Connect the cables of charger (2) as follows:
   - the positive (+) red cable to the (+) terminal of battery (1).
   - the negative (–) black cable to earth point (3) on the vehicle.

7. At the end of the charging operation, switch off charger (2) before disconnecting the cables from battery (1).

⚠ CAUTION

If this label is present, use only a 12 V charger to avoid causing irreversible damage to the electrical components.

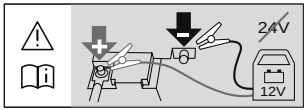

⚠ WARNING

Frozen battery

Never try to charge a frozen battery - risk of explosion!
If the battery has frozen, have it checked by a dealer or by a qualified workshop, who will verify that the internal components have not been damaged and that the case has not cracked, which could lead to a risk of leakage of toxic and corrosive acid.

Disconnecting / Connecting Battery

In order to maintain an adequate state of charge for starting the engine, we recommend disconnecting the battery if the vehicle is to be unused for an extended period.
Before disconnecting the 12 V battery:

1. Close all openings (doors, boot, windows, roof).
2. Switch off all electricity-consuming devices (audio system, wipers, lights, etc.).
3. Switch off the ignition and wait for 4 minutes.

After accessing the 12 V battery, it is only necessary to disconnect the (+) terminal.

Quick-Release Battery Clamp

Disconnecting the (+) terminal

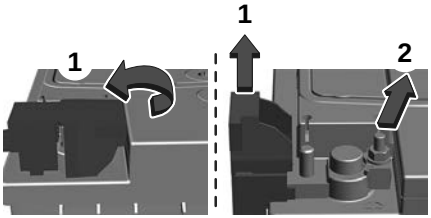

1. Depending on equipment, lift the plastic cover on the (+) terminal.
2. Raise lever (1) fully to release clamp (2).
3. Remove clamp (2) by lifting it off.

Reconnecting the (+) terminal

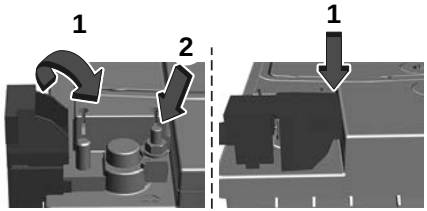

1. Raise lever (1) fully.
2. Refit open clamp (2) on the (+) terminal.
3. Push clamp (2) fully down.

4. Lower lever (1) to lock clamp (2).
5. Depending on equipment, lower the plastic cover on the (+) terminal.

NOTE

Do not force the lever when pressing on it, as if the clamp is not positioned correctly, locking will then not be possible. Start the procedure again.

After Being Recharged - Restarted

After reconnecting the battery, turn on the ignition and wait 1 minute before starting the engine, to enable the electronic systems to initialise.
If minor problems nevertheless persist following this operation, contact a dealer or a qualified workshop.
Referring to the relevant section, reinitialise certain equipment:

- Remote control key or electronic key (depending on version).
- Electric windows.
- Date and time.
- Preset radio stations.

NOTE

The Stop & Start system may not be operational during the trip following the first engine start.
In this case, the system will only be available again after a continuous period with the vehicle immobilised, the duration of which depends on the exterior temperature and the state of charge of the battery (up to about 8 hours).

Towing

Towing The Vehicle

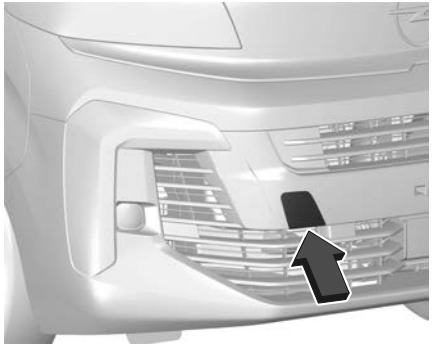

1. Remove the cover cap.

The towing eye is stowed with the vehicle tools.

2. Screw in the towing eye clockwise as far as it will go.
3. Attach a tow rope or better a tow rod to the towing eye.

The towing eye must only be used for towing and not for recovering the vehicle.

1. Switch on ignition to release steering wheel lock and to permit operation of brake lights, horn and windshield wiper.

⚠ CAUTION

Deactivate the driver assistance systems like active emergency braking, otherwise the vehicle may automatically brake during towing.

2. Switch the selector lever to neutral.
3. Release the parking brake.

⚠ CAUTION

Drive slowly. Do not drive jerkily. Excessive tractive force can damage the vehicle.

When the engine is not running, considerably more force is needed to brake and steer.
To prevent the entry of exhaust gases from the towing vehicle, switch on the air recirculation and close the windows.
Vehicles with automatic transmission: The vehicle must be towed facing forwards, not faster than 80 km/h nor further than 100 km. In all other cases and when the transmission is defective, the front axle must be raised off the ground.

Automatic transmission (ICE / BEV)

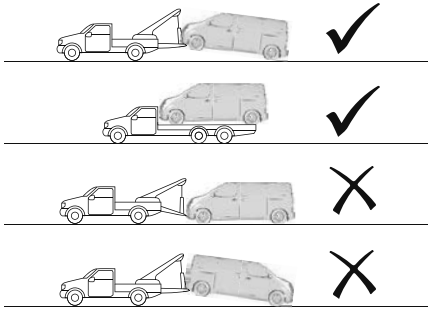

When towing a BEV or a vehicle equipped with an automatic transmission, transport the vehicle on a platform or tow it with the front wheels lifted.
Seek the assistance of a workshop.

Manual transmission (ICE)

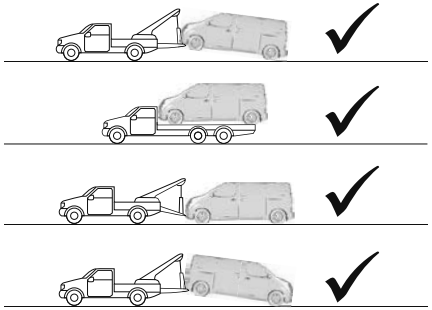

With manual transmision:

Put the transmission into neutral and parking brake off

4. After towing, unscrew the towing eye.
5. Insert cover cap again.

Towing another vehicle

1. Remove the cover cap.

The towing eye is stowed with the vehicle tools.

2. Screw in the towing eye clockwise as far as it will go.

The lashing eye at the rear underneath the vehicle must never be used as a towing eye.

3. Attach a tow rope or better a tow rod to the towing eye.

The towing eye must only be used for towing and not for recovering a vehicle.

⚠ CAUTION
Drive slowly. Do not drive jerkily. Excessive tractive force can damage the vehicle.

4. After towing, unscrew the towing eye.
5. Insert cover cap again.

MAINTENANCE AND VEHICLE CARE

Introduction To Maintenance And Vehicle Care

General Information

We recommend the use of genuine parts and accessories and factory approved parts specific for your vehicle type. We cannot assess or guarantee reliability of other products - even if they have a regulatory or otherwise granted approval.
Any modification, conversion or other changes made to standard vehicle specifications (including, without limitation, software modifications, modifications of the electronic control units) may invalidate the warranty offered by Manufacturer. Furthermore, such changes may affect driver assistance systems, may impact fuel or electric power consumption, CO_2 emissions and other emissions of the vehicle and cause the vehicle to no longer conform to the operating permit, impacting the validity of your vehicle registration.

⚠ CAUTION

Access to the diagnostic socket associated with the on-board electronics is reserved for qualified technicians and approved tools.

⚠ CAUTION

When transporting the vehicle on a train or on a recovery vehicle, the mud flaps might be damaged.

Very cold climate covers

In order to prevent the accumulation of snow at the radiator cooling fan, it is recommended to install removable protection covers.
The protection covers must be professionally installed. Seek the assistance of a workshop.

⚠ CAUTION

The cold protection covers must be removed when one of the following conditions occurs:

- The ambient temperature is above 10 °C.
- The vehicle is towing a trailer.
- The vehicle is driven at speeds above 120 km/h.

End-Of-Life Vehicle Disposal

Information on end-of-life vehicle recovery centers and the recycling of end-of-life vehicles is available on our website, where legally required. Only entrust this work to an authorized recycling center.

High voltage battery

The high voltage battery is designed for the life of the vehicle if the recommendations are followed. If it becomes necessary to replace the high voltage battery, contact a workshop for instructions on its disposal. Improper disposal carries the risk of severe burns, electric shock, and damage to the environment.

Service Information

In order to ensure economical and safe vehicle operation and to maintain the value of your vehicle, it is of vital importance that all maintenance work is carried out at the proper intervals.
The detailed, up-to-date service schedule for your vehicle is available at the workshop.
Severe operating conditions exist if one or more of the following circumstances occur frequently: Cold starting, stop and go operation, e.g. for taxis and police vehicles, trailer operation, mountain driving, driving on poor and sandy road surfaces, increased air pollution, presence of airborne sand and high dust content, driving at high altitude and large variations of temperature.
Under these severe operating conditions, certain service work may be required more frequently than the regular service interval indicated in the service display. Contact a workshop for customized service schedules.

Confirmations

Confirmation of service is recorded in the Service and warranty booklet.
The date and mileage is completed with the stamp and signature of the servicing workshop.
Make sure that the Service and warranty booklet is completed correctly as continuous proof of service is essential if any warranty or goodwill claims are to be met, and is also a benefit when selling the vehicle.

Scheduled Servicing

Periodic Checks

Unless otherwise indicated, check these components in accordance with the Manufacturer's service schedule and according to your engine.
Otherwise, have them checked by a dealer or a qualified workshop.
Only use products recommended by dealer or products of equivalent quality and specification.

In order to optimise the operation of components as important as those in the braking system, dealer selects and offers very specific products.

Checking Fluids Level

Check all of the following levels regularly in accordance with the manufacturer's service schedule. Top them up if required, unless otherwise indicated.
If a level drops significantly, have the corresponding system checked by a dealer.

⚠ WARNING

The fluids must comply with the Manufacturer's requirements and with the vehicle's engine.

⚠ WARNING

Take care when working under the hood, as certain areas of the engine may be extremely hot (risk of burns) and the cooling fan could start at any time (even with the ignition off).

⚠ WARNING

Avoid prolonged contact of used oil or fluids with the skin.
Most of these fluids are harmful to health and very corrosive.

Engine Oil

(ICE version)

The level is checked, with the engine having been switched off for at least 30 minutes and on level ground, either using the oil level indicator in the instrument panel when the ignition is switched on (for vehicles equipped with an electric gauge), or using the dipstick.

It is normal to top up the oil level between two services (or oil changes).
It is recommended that you check the level, and top up if necessary, every 5,000 km (3,000 miles).

⚠ WARNING

In order to maintain the reliability of the engine and emissions control system, never use additives in the engine oil.

Checking using the dipstick

For the location of the dipstick, please refer to the illustration of the corresponding engine compartment.
For the location of the dipstick, please refer to the illustration of the corresponding engine compartment.

1. Grasp the dipstick by its colored grip and pull it out completely.
2. Wipe the end of the dipstick using a clean, lint-free cloth.
3. Reinsert the dipstick and push fully down, then pull it out again to visually check the oil level: the correct level is between marks A (MAX) and B (MIN).

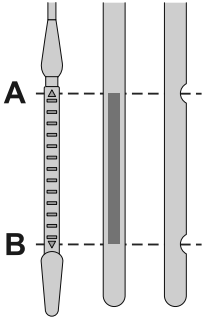

Do not start the engine if the level is:

- above mark MAX: contact a dealer or a qualified workshop
- below mark MIN: top up the engine oil immediately

⚠ WARNING

Oil grade. Before topping up or changing the engine oil, check that the oil is suitable for your engine and complies with the recommendations in the service schedule supplied with the vehicle (or available from your dealer or qualified workshop). Use of non-recommended oil may invalidate your warranty in the event of engine failure.

Engine oil ⇨ 235
Fluids and lubricants ⇨ 281
Fluid capacities ⇨ 283

Washer Fluid

Top up to the required level when necessary.

Brake fluid

The level of this fluid should be close to the "MAX" mark. If not, check the brake pads for wear.

To know how often the brake fluid should be replaced, refer to the manufacturer's servicing schedule.

⚠ WARNING

Clean the cap before removing it to refill. Use only DOT4 brake fluid from a sealed container.

Engine coolant

ICE version

It is normal to top up this fluid between two services.

The check and top-up must only be done with the engine cold.

A level of coolant that is too low risks causing major damage to the engine; the coolant level must be close to the MAX mark without ever going above it.

If the level is close to or below the MIN mark, it is essential to top it up.

When the engine is hot, the temperature of the coolant is regulated by the fan. As the cooling system is pressurized, wait at least one hour after switching off the engine before carrying out any work.
In order to avoid the risk of scalding if you need to top up in an emergency, wrap a cloth around the cap and unscrew the cap by two turns to allow the pressure to drop.
Once the pressure has dropped, remove the cap and top up to the required level.

BEV version

Do not top up the coolant.

If the level is close to or below the MIN mark, it is essential to contact a dealer or a qualified workshop.

Recommended Fluids, Lubricants, and Parts

Only use products that meet the recommended specifications.

⚠ WARNING

Operating materials are hazardous and could be poisonous. Handle with care. Pay attention to information given on the containers.

Engine oil

Engine oil is identified by its quality and its viscosity. Quality is more important than viscosity when selecting which engine oil to use. The oil quality ensures e.g. engine cleanliness, wear protection and oil aging control, whereas viscosity grade gives information on the oil's thickness over a temperature range. Use the appropriate engine oil given on the service schedule sheet handed over by the selling dealer.

Checking Fluids Level ⇨ 234
Fluids and lubricants ⇨ 281
Fluid capacities ⇨ 283

Topping up engine oil

⚠ CAUTION

In case of any spilled oil, wipe it up and dispose it properly.

Engine oils of different manufacturers and brands can be mixed as long as they comply with the required engine oil quality and viscosity.
Use of engine oils for all petrol engines with only ACEA quality is prohibited, since it can cause engine damage under certain operating conditions.

Additional engine oil additives

The use of additional engine oil additives could cause damage and invalidate the warranty.

Engine oil viscosity grades

The SAE viscosity grade gives information of the thickness of the oil.
Multi grade oil is indicated by two figures, e.g. SAE 0W-30. The first figure, followed by a W, indicates the low temperature viscosity and the second figure the high temperature viscosity.

Washer fluid

Use only washer fluid approved for the vehicle to prevent damage of wiper blades, paintwork, plastic and rubber parts. Consult a workshop.

AdBlue®

General information

The selective catalytic reduction (BlueInjection) is a method to substantially reduce the nitrogen oxides in the exhaust emission. This is achieved by injecting a Diesel Exhaust Fluid (DEF) into the exhaust system. The ammonia released by the fluid reacts with nitro gases (NOx) from the exhaust and turns it into nitrogen and water.
The designation of this fluid is AdBlue®. It is a non-toxic, nonflammable, colorless and odorless fluid which consists of 32% urea and 68% water.

⚠ WARNING

Avoid contact of your eyes or skin with AdBlue®.
In case of eye or skin contact, rinse off with water.

⚠ CAUTION

Avoid contact of the paintwork with AdBlue®.
In case of contact, rinse off with water.

AdBlue® freezes at a temperature of approx. -11 °C. As the vehicle is equipped with an AdBlue® pre-heater, the emissions reduction at low temperatures is ensured. The AdBlue® preheater works automatically.
In some circumstances below the mentioned temperature, an error message appears in the Instrument cluster. In this event, park the vehicle in a space with a higher ambient temperature until AdBlue® is liquefied.

ⓘ NOTE

Frozen and again liquefied AdBlue® is usable without quality loss.

The typical AdBlue® consumption is approx. 2 l per 1000 km, but can also be higher depending on driving behavior (e.g. high load or towing).

Level warnings

Depending on the calculated range of AdBlue®, different messages are displayed in the Instrument cluster. The messages and the restrictions are a legal requirement.

- The first possible warning is Top up emissions additive: Starting prevented in 2400 km.

  When switching on the ignition, this warning will show up once briefly with the calculated range.
  Additionally, control indicator AdBlue will illuminate and a chime will sound. Driving is possible without any restrictions.
- The next warning level is entered with a range below 800 km. The message with the current range will always be displayed when ignition is switched on.
  Additionally, control indicator AdBlue will illuminate and a chime will sound. Refill AdBlue® before entering the next warning level. When driving, the chime sounds and the message is displayed every 100 km until the AdBlue® tank has been topped-up.
- The next warning level is entered with a range below 100 km. The message with the current range will always be displayed when ignition is switched on.
  Additionally, control indicator AdBlue will flash and a chime will sound. Refill AdBlue® as soon as possible before the AdBlue® tank is completely empty. Otherwise, a restart of the engine will not be possible.
  When driving, the chime sounds and the message is displayed every 10 km until the AdBlue® tank has been topped-up.
- The last warning level is entered when the AdBlue® tank is empty. Restart of the engine is not possible. The following warning message will be displayed:
  Top up emissions additive: Starting prevented
  Additionally, control indicator AdBlue will flash and a chime will sound. Refill the tank to a level of at least 5 l of AdBlue®, otherwise restarting of the engine is not possible.

NOTE

Depending on the engine different levels may apply.

High emission warnings

In the event of a fault with the emissions control system, different messages are displayed in the Instrument cluster. The messages and the restrictions are a legal requirement.

- If a fault is detected for the first time, the warning Emissions fault is displayed.

  Additionally, control indicators AdBlue, 🔧 and ⛽ will illuminate and a chime will sound. Driving is possible without any restrictions.
  If it is a temporary fault, the alert disappears during the next journey, after self-diagnosis of the emissions control system.
- If the fault is confirmed by the emission control system, the following message will be displayed: Emissions fault: Starting prevented in 850 km.

Additionally, control indicators AdBlue, and will illuminate and a chime will sound.
When driving, the message is displayed every 30 s while the fault persists.

- If the last warning level is entered, the following warning message will be displayed: Emissions fault: Starting prevented

  Additionally, control indicators AdBlue, and will illuminate and a chime will sound.
  Consult a workshop for assistance.

Brake and clutch fluids

Over time, brake fluid absorbs moisture which will reduce braking effectiveness. The brake fluid should therefore be replaced at the specified interval.

Antifreeze coolant

Use only antifreeze approved for the vehicle. Consult a workshop.
The system is factory filled with coolant designed for excellent corrosion protection and frost protection down to approx. -37 °C.
This concentration should be maintained all year round. The use of additional coolant additives that intend to give additional corrosion protection or seal against minor leaks can cause function problems. Liability for consequences resulting from the use of additional coolant additives will be rejected.

Engine Compartment

Access to engine compartment

Opening

1. Open the driver's door.

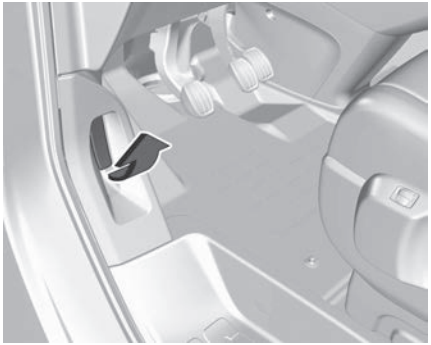

2. Pull the release lever and return it to its original position.

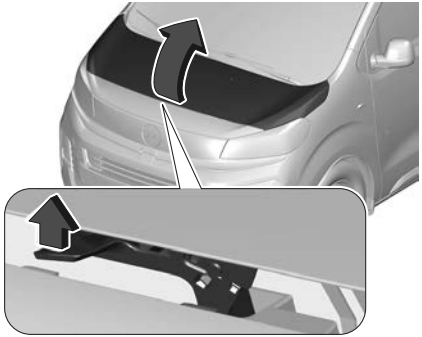

3. Push the safety catch upwards and open the bonnet.

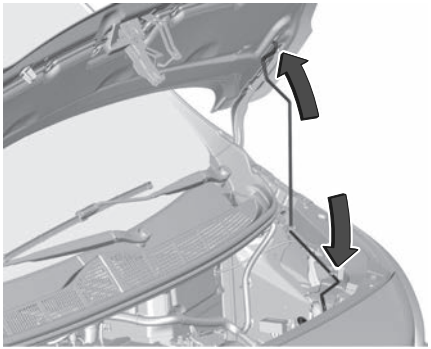

4. Secure the bonnet support.

Closing

Before closing the bonnet, press the support into the holder.
Lower the bonnet and let it fall into the latch from a low height (20-25 cm).
Check that the bonnet is engaged.

⚠ CAUTION
Do not press the bonnet into the latch to avoid dents

Engine

The engine shown here is an example for illustrative purposes only.
The locations of the following components may vary:

- Air filter.
- Engine oil dipstick.
- Engine oil filler cap.
- Priming pump.

ICE

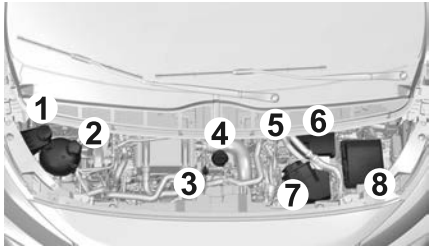

1 Screen wash fluid reservoir
2 Engine coolant reservoir
3 Engine oil dipstick
4 Engine oil filler cap
5 Brake fluid reservoir
6 Remote earth point (–)
7 Battery
8 Fuse box

BEV

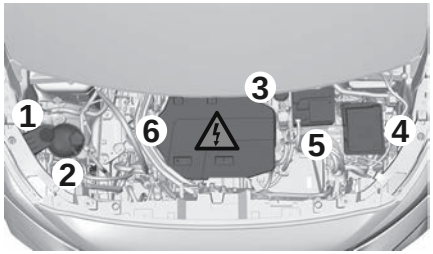

1 Screen wash fluid reservoir
2 Engine coolant reservoir (level only)
3 Brake fluid reservoir
4 Fuse box
5 Battery/Fuses
6 400 V electrical circuit

Checking Oil Level

Check the engine oil level manually on a regular basis to prevent damage to the engine. Ensure that the correct specification of oil is used.
The maximum engine oil consumption is 0.6 l per 1000 km.
Check with the vehicle on a level surface. The engine must be at operat-

ing temperature and switched off for at least five minutes.

⚠ CAUTION

It is the owner's responsibility to maintain the proper level of an appropriate quality oil in the engine.

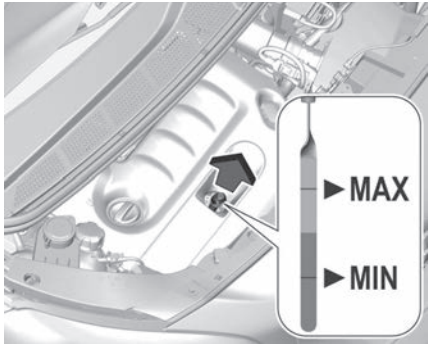

Different dipsticks are used depending on engine variant.

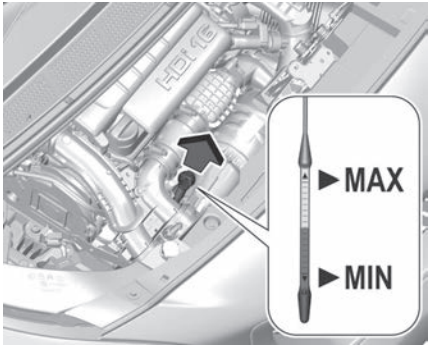

⚠ WARNING

Insert dipstick fully up to the stop on the handle.Ensure that no engine oil gets into the engine compartment, as this increases risk of fire.

When the engine oil level has dropped to the MIN mark, top up the engine oil.

We recommend the use of the same grade of engine oil that was used at last change.

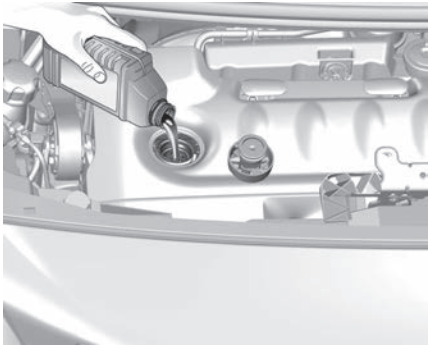

The engine oil level must not exceed the MAX mark on the dipstick.

⚠ CAUTION

Overfilled engine oil must be drained or suctioned out. If the oil exceeds the maximum level, do not start the vehicle and contact a workshop.

Fit the cap on straight and tighten it.

Adding Washer Fluid

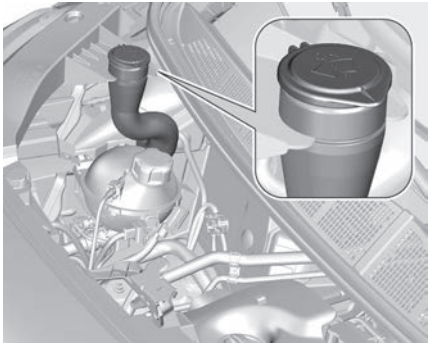

Fill with clean water mixed with a suitable quantity of approved windshield washer fluid which contains antifreeze.

The washer fluid level has to be underneath the MAX mark.

⚠ CAUTION

Only washer fluid with a sufficient antifreeze concentration provides protection at low temperatures or a sudden drop in temperature.

Fluid specification

The fluid must be topped up with a premixed windshield washer fluid, available through the dealer network.
In winter (temperatures below zero), a fluid containing an anti-freeze agent which is appropriate for the temperature conditions must be used in order to protect the system's components (pump, tank, ducts, jets).

⚠ CAUTION

Filling with pure water is prohibited in all circumstances (risk of freezing, limescale, etc.).
The use of vinegar or any other non-dedicated product will cause irreversible damage to the windshield washer system.

Adding Coolant Fluid

Coolant level - ICE

The factory filled coolant provides freeze protection down to approx. -37 °C.

⚠ CAUTION

Only use approved antifreeze.

⚠ CAUTION

A too low coolant level can cause engine damage.

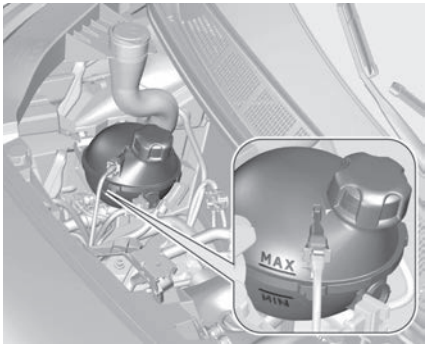

If the cooling system is cold, the coolant level should be above the MIN mark. Top up if the level is low.

⚠ WARNING

Allow the engine to cool before opening the cap. Carefully open the cap, relieving the pressure slowly.

To top up, use a 1:1 mixture of released coolant concentrate mixed with clean tap water. If no coolant concentrate is available, use clean tap water. Install the cap tightly. Have the coolant concentration checked and have the cause of the coolant loss remedied by a workshop.

Coolant level - high voltage components

⚠ CAUTION

Using the wrong coolant will cause severe damages to the high voltage components. Only qualified service personnel are allowed to open the coolant reservoir and to top up coolant.

⚠ CAUTION

A too low coolant level can cause damage to the high voltage components.

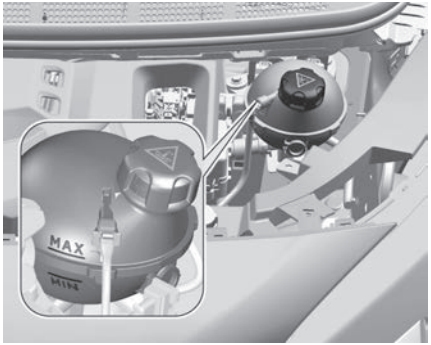

If the cooling system is cold, the coolant level should be above the MIN mark. If the coolant level is too low, seek the assistance of a workshop.

Coolant level - BEV

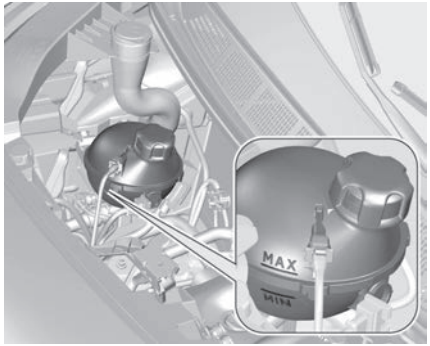

If the coolant level is at the MIN mark or below, seek the assistance of a workshop to have the engine coolant topped up.

⚠ CAUTION

Using the wrong coolant will cause severe damages to the high voltage components. Only qualified service personnel are allowed to open the coolant reservoir and to top up coolant.

Checking Brake Fluid

⚠ WARNING

Brake fluid is poisonous and corrosive. Avoid contact with eyes, skin, fabrics and painted surfaces.

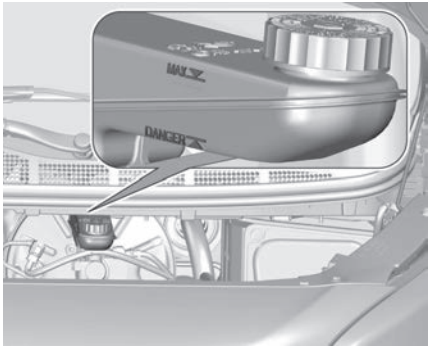

The brake fluid level must be between the DANGER and MAX marks.

If fluid level is below DANGER, seek the assistance of a workshop.

12V Battery

The vehicle battery is maintenancefree provided that the driving profile allows sufficient charging of the battery. Short-distance-driving and frequent engine starts can discharge the battery. Avoid the use of unnecessary electrical consumers.

Batteries do not belong in household waste. They must be disposed of at an appropriate recycling collection point.
Laying up the vehicle for more than four weeks can lead to battery discharge. Disconnect the clamp from the negative terminal of the vehicle battery.
Ensure the ignition is switched off before connecting or disconnecting the vehicle battery.

Symbols

No sparks or naked flames, no smoking.

Always protect your eyes. Explosive gases can cause blindness and injury.

Keep the vehicle's battery out of the reach of children.

The vehicle's battery contains sulfuric acid which can make you go blind or cause severe burns.

For more information, refer to the handbook.

Explosive gases can be present close to the battery.

Replacing the vehicle battery

ⓘ NOTE

Any deviation from the instructions given in this section may lead to temporary deactivation or disturbance of the stop-start system.

When the vehicle battery is being replaced, please ensure that there are no open ventilation holes in the vicinity of the positive terminal. If a ventilation hole is open in this area, it must be closed off with a dummy cap, and the ventilation in the vicinity of the negative terminal must be opened.
Ensure that the battery is always replaced by the same type of battery.
All battery information can be found online at
https://public-service-box.opel.com/OVddb/OV/en_GB/index.html
The vehicle battery has to be replaced by a workshop.

Charging the vehicle battery

⚠ WARNING

On vehicles with stop-start system, ensure that the charging potential does not exceed 14.6 V when using a battery charger.
Otherwise the vehicle battery may be damaged.

Discharge protection

Battery voltage

When the vehicle battery voltage is running low, a warning message will appear in the Instrument cluster.
When the vehicle is being driven, the load reduction function temporarily deactivates certain functions, such as the air conditioning, the heated rear window, heated steering wheel, etc.
The deactivated functions are reactivated automatically as soon as conditions permit.

Idle boost

If charging of the vehicle battery is required due to battery condition, the power output of the generator must be increased. This will be achieved by an idle boost which may be audible.
A message appears in the Instrument cluster.

Power outlet

The power outlets are deactivated in the event of low vehicle battery voltage.

Heating functionalities

ⓘ NOTE

Individual heating functionalities, such as heated seats or heated steering wheel, may be temporarily unavailable in the event of electrical loading constraints. Functions will be resumed after some minutes.

Power saving mode

This mode deactivates electrical consumers to avoid excessive discharging of the vehicle battery.
These consumers, such as the Infotainment system, windshield wipers, low beam headlights, courtesy light, etc. can be used for a total maximum time of about 40 minutes after ignition is switched off.

Changing into power saving mode

When power saving mode is activated, a message appears in the Instrument cluster indicating Power saving mode.

An active telephone call using the hands-free option will be maintained for around 10 minutes longer.

Deactivating power saving mode

Power saving mode is deactivated automatically when the engine is restarted. Run the engine for a sufficient charge:

- for less than 10 minutes to use the consumers for approx. 5 minutes
- for more than 10 minutes to use the consumers for up to approx. 30 minutes

Engine Washing

⚠ WARNING

Because of the presence of electrical equipment under the bonnet, it is strongly recommended that exposure to water (rain, washing, etc.) be limited.

Vehicle Maintenance

Wiper Blade Replacement

⚠ CAUTION

Never attempt to move the wipers manually. This can cause permanent damage to the mechanism.

Windshield

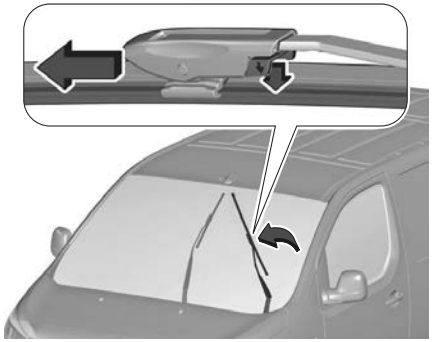

1. Switch off the ignition.
2. Within 1 minute after switching off the ignition, operate the wiper lever to position the wiper blades vertically on the windshield.
3. Lift the wiper arm until it stays in the raised position, disengage and remove the wiper blade.
4. Attach the wiper blade to the wiper arm and push until it engages.
5. Lower the wiper arm carefully.

⚠ WARNING

Take care not to hold the arms at the jet locations.

Do not touch the wiper blades - risk of irreparable deformation.
Do not release them while moving them. Risk of damaging the windscreen!

ⓘ NOTE

Do not apply "Rain X" type water-repellent products.

⚠ CAUTION

Do not allow the wiper arms to slam on the windshield. This can damage the blades and the windscreen.

Rear window

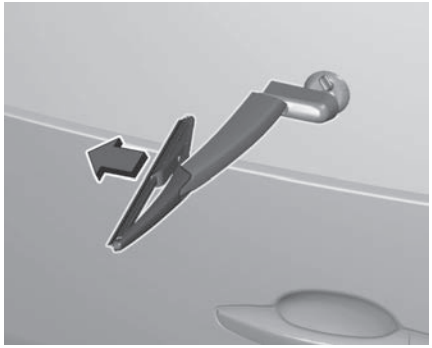

1. Lift the wiper arm. Disengage the wiper blade as shown in the illustration and remove.
2. Attach the wiper blade slightly angled to the wiper arm and push until it engages.
3. Lower the wiper arm carefully.

Refill AdBlue® (Exhaust Emission Fluid)

⚠ CAUTION

Only use AdBlue® that complies with European standards DIN 70 070 and ISO 22241-1.
Do not use additives.
Do not dilute AdBlue®.
Otherwise the selective catalytic reduction system could be damaged.

ⓘ NOTE

Whenever a filling pump with a nozzle for passenger cars is not available at a filling station, use only AdBlue® bottles or canisters with a sealed refill adapter for refilling, to prevent splashback and overspill, and in order to ensure that the fumes from the tank are captured and do not emerge. AdBlue® in bottles or canisters is available in many filling stations and can be purchased e.g.at dealers and other retail outlets.
Since AdBlue® has a limited durability, check the date of expiry before refilling.

ⓘ NOTE

Refill the AdBlue® tank to a level of at least 5 l, to ensure that the new AdBlue® level is being detected.
In case AdBlue® refill is not successfully detected:

1. Continuously drive the vehicle for ten minutes making sure that vehicle speed is always higher than 20 km/h.
2. If AdBlue® refill is detected successfully, AdBlue® supply driven warnings or limitations will disappear.

If AdBlue® refill is still not detected, seek the assistance of a workshop.
If AdBlue® must be refilled at temperatures below -11 °C, the refilling of AdBlue® may not be detected by the system. In this event, park the vehicle in a space with a higher ambient temperature until AdBlue® is liquified.

ⓘ NOTE

When unscrewing the protective cap from the filler neck, ammonia fumes may emerge. Do not inhale as the fumes have a pungent smell. The fumes are not harmful by inhalation.

The AdBlue® tank should be filled completely. This must be done if the warning message regarding prevention of an engine restart is already displayed.

ⓘ NOTE

The vehicle must be parked on a level surface.

1. Remove key from ignition switch.
2. Open the driver's door to access the AdBlue® filler neck.

3. Unscrew protective cap from the filler neck.
4. Open AdBlue® canister.
5. Mount one end of the hose on the canister and screw the other end on the filler neck.
6. Lift the canister until it is empty, or until the flow from the canister has stopped. This can take up to five minutes.
7. Place the canister on the ground to empty the hose, wait 15 s.
8. Unscrew the hose from the filler neck.
9. Mount the protective cap and turn clockwise until it engages.

NOTE

Refill AdBlue® with the engine switched off (vehicles with ignition switch: turn key to position 0. Vehicles With Power Button: Start/Stop button not pressed).

NOTE

Dispose of AdBlue® canister according to environmental requirements. Hose can be reused after flushing with clear water before AdBlue® dries out.

Fluid capacities ⇨ 283

Air intake

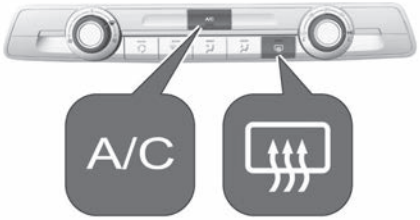

The air intake in front of the windshield in the engine compartment must be kept clear to allow air intake. Remove any leaves, dirt or snow.

Engine Oil Filter

Change the oil filter each time the engine oil is changed.

Engine Air Filter

Depending on the environment and the use of the vehicle (e.g. dusty atmosphere, city driving), change it twice as often, if necessary.

Air Conditioner Maintenance

In order to ensure continuously efficient performance, cooling must be operated for a few minutes once a month, irrespective of the weather and time of

year. Operation with cooling is not possible when the outside temperature is too low.

Drive Belt Inspection

⚠ WARNING

Maintenance

In accordance with current safety regulations, for all work on your vehicle's seat belts, contact a qualified workshop with the skills and equipment needed, which a dealer is able to provide.
Have the seat belts checked regularly by a dealer or a qualified workshop, particularly if the straps show signs of damage.
Clean the seat belt straps with soapy water or a textile cleaning product, sold by dealers.

Compartment Filter

Depending on the environment and the use of the vehicle (e.g. dusty atmosphere, city driving), change it twice as often, if necessary.

ⓘ NOTE

A clogged passenger compartment filter can adversely affect air conditioning system performance and generate undesirable odours.

Diesel Filter

The start of clogging of the particle filter is indicated by the temporary lighting of this warning light, accompanied by an alert message.
As soon as traffic conditions allow, regenerate the filter by driving at a speed of at least 60 km/h, with an engine speed above 2,500 rpm, for about 15 minutes (until the warning light goes out).
If it is not possible to reach 60 km/h, leave the engine running at idle for about 15 minutes, then drive with an engine speed above 2,500 rpm for 15 minutes.

⚠ CAUTION

Do not switch off the engine until the filter is fully regenerated; repeated intervals can degrade the engine oil prematurely.

Regenerating the filter while the vehicle is stationary is not recommended.

ⓘ NOTE

Following prolonged operation of the vehicle at very low speed or at idle, you may, in exceptional circumstances, notice water vapour coming from the exhaust while accelerating. These emissions have no impact on the vehicle’s behaviour and the environment.

ⓘ NOTE

New vehicle

During the first few particle filter regeneration operations, you may notice a "burning" smell. This is perfectly normal.

Fuses

Fuses Box

⚠ DANGER

Changing a fuse

All work must be carried out only by a dealer or a qualified workshop. The replacement of a fuse by a third party could cause a serious malfunction of the vehicle.

ⓘ NOTE

Installing electrical accessories

The vehicle's electrical system is designed to operate with standard or optional equipment.
Before fitting other electrical equipment or accessories to your vehicle, contact a dealer or a qualified workshop.

⚠ CAUTION

The Manufacturer accepts no responsibility for the cost incurred in repairing the vehicle or for rectifying malfunctions resulting from the installation of accessories not supplied or not approved by it and not installed in accordance with its specifications, in particular when the combined power consumption of all of the additional equipment connected exceeds 10 milliamperes.

Bulb Replacement

Before replacing a bulb, ensure that all exterior and interior lights and the ignition are switched off. All doors have to be closed.
Only hold a new bulb at the base.
Do not touch the bulb glass with bare hands.
Use only the same bulb type for replacement.
Replace headlight bulbs from within the engine compartment.

Bulb check

After a bulb replacement switch on the ignition, operate and check the lights.

Halogen headlights

Halogen headlights with separate bulbs for low beam, high beam, daytime running light and parking light.

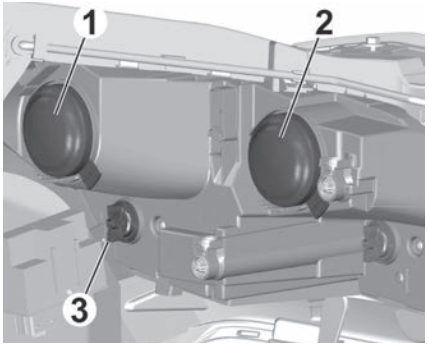

1 Low beam

2 High beam

3 Daytime running light and parking light

Low beam

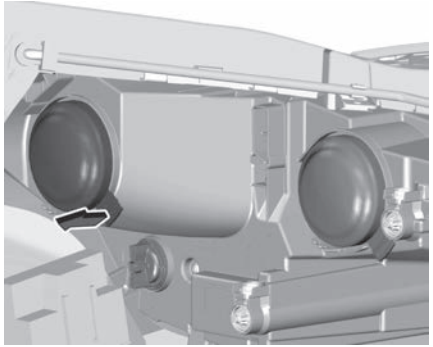

1. Remove the protective cover.

2. Press latch and remove the bulb socket from reflector housing.

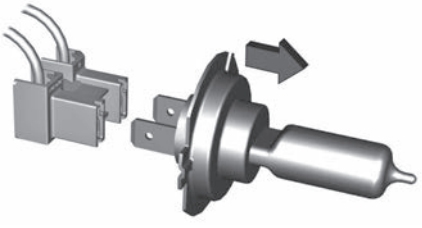

3. Detach the bulb from the bulb socket and replace the bulb.
4. Insert the bulb socket into the reflector housing.
5. Reinstall the cover.

High beam

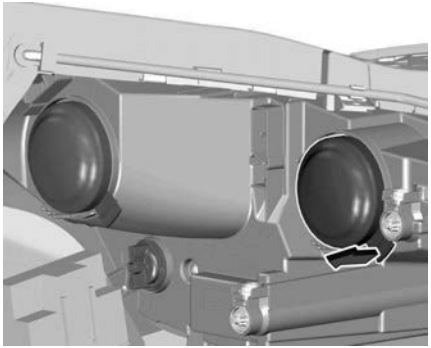

1. Remove the protective cover.

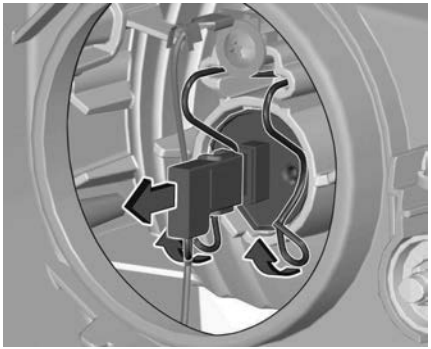

2. Disengage the spring clip from the retainer.
   Swivel the spring clip upwards.
   Withdraw the bulb socket from the reflector housing.

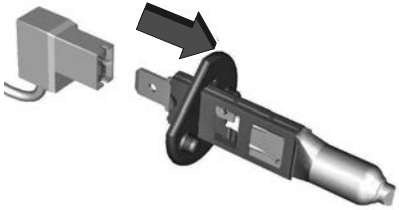

3. Detach the bulb from the bulb socket and replace the bulb.
4. Insert the bulb socket into the reflector housing.
5. Reinstall the cover.

Daytime running light and parking light

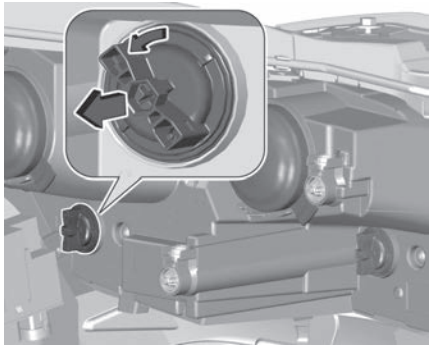

1. Turn the bulb socket anticlockwise and remove it from the light assembly.

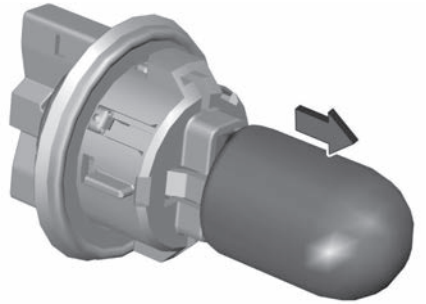

2. Remove the bulb from the socket by pulling.
3. Replace and insert the new bulb into the socket
4. Insert the bulb socket into the light assembly by turning clockwise and engage.

LED headlights

Headlights for low and high beam, daytime running lights, parking lights and turn lights are designed as LEDs and cannot be changed.
Have lights repaired by a workshop in case of failure.

Front fog lights

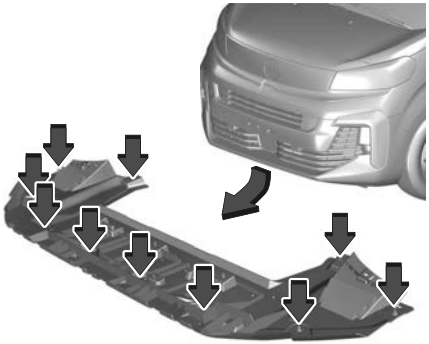

1. Unscrew and remove the underfloor cover.

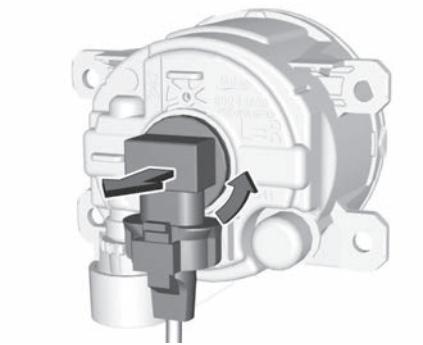

2. Turn the bulb socket anticlockwise and remove it from the light assembly.

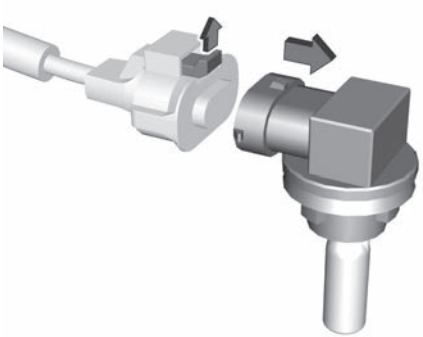

3. Disengage the plug connector by pulling the retaining lug.
4. Remove and replace the bulb unit and attach the plug connector. Note that the bulb and the socket are one unit and have to be changed together.
5. Insert the bulb socket into the light assembly by turning clockwise and engage.
6. Mount the light assembly by tightening the two screws.
7. Attach and engage the cover.

Front turn lights

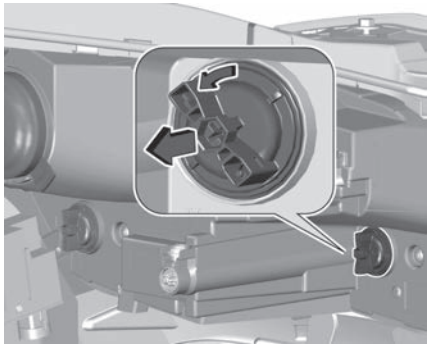

1. Rotate the bulb socket anticlockwise to disengage and withdraw from the reflector.

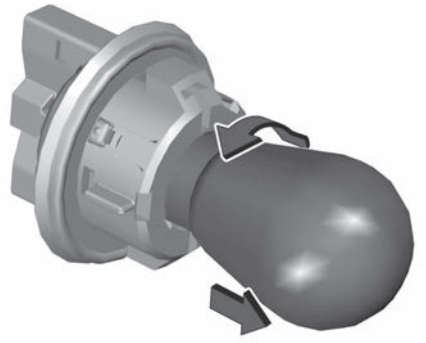

2. Slightly press down the bulb, turn it anticlockwise and remove it from the socket.
3. Replace and insert the new bulb into socket by turning clockwise.
4. Insert the bulb socket into the reflector and turn clockwise.

Tail light assembly

All body styles except platform cab

1. Vehicles with a cover hiding the lower tail light assembly screw: remove cover by carefully releasing its retaining lugs with a screwdriver and tilting the cover slightly towards the outside.

2. Unscrew and remove the two screws.

3. Vehicles with air vent or cover behind the tail light, in the trim: Remove air vent or cover.

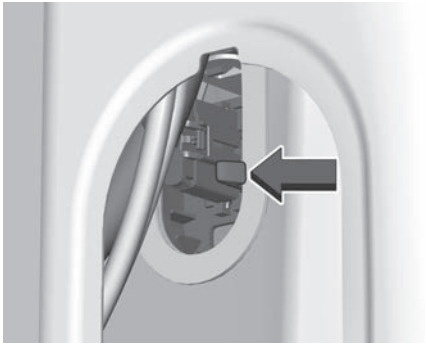

4. While holding the light assembly, push the retaining lug which holds the tail light assembly in the body.

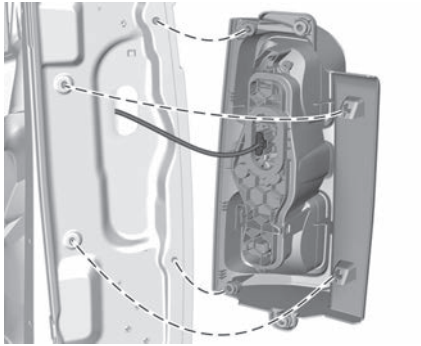

5. Carefully withdraw the tail light assembly from recess and remove. Take care that the cable duct remains in position.

6. Detach the cable from the retainer in the light assembly.

7. Disengage the central retaining lug, pull the bulb carrier and disengage the remaining retaining lugs.

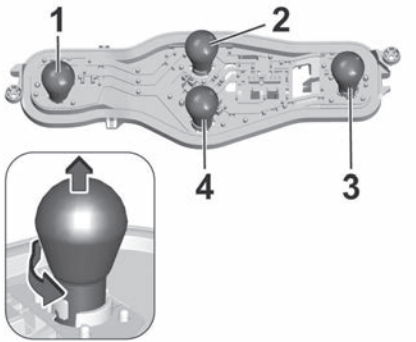

8. Push the bulb slightly down, turn it and remove it from the bulb carrier.
Replace the bulb: Tail light / parking light (1) Reverse light (2) Brake light / parking light (3) Turn light / hazard warning flasher (4)

9. Attach the bulb carrier to the light assembly.

10. Attach the cable to the retainer.

11. Attach the light assembly to the vehicle body and tighten both screws.

12. Clip in cover which may have covered the lower tail light assembly screw.

13. Attach cover or air vent behind the tail light if removed before.

Platform cab

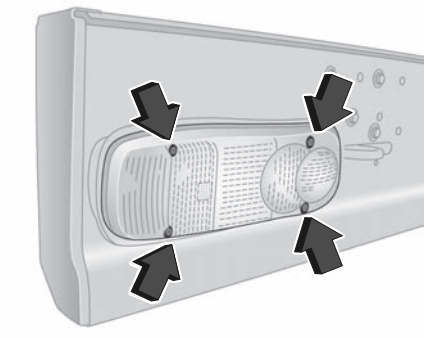

1. Remove the four screws from the lens.

2. Remove lens from the aperture.

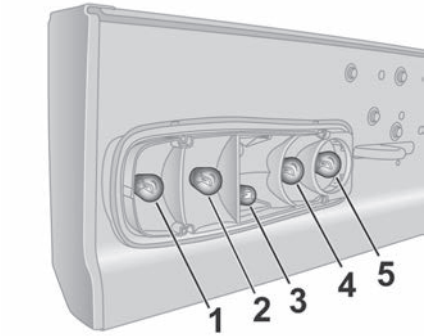

3. Push bulb into socket slightly, rotate anticlockwise, remove and renew bulb.
Turn light (1) Brake light (2) Tail light (3) Reversing light (4) Rear fog light, may be on one side only (5)

4. Install lens in aperture and replace the four screws.

Side turn lights

To replace the bulb, remove the light housing:

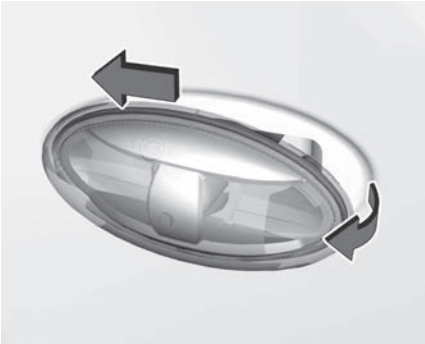

1. Slide the lamp housing forward and remove it at the back. It may help to use a screwdriver to lever out the light housing from the body. Wrap the tip of the screwdriver with a cloth to prevent paint damage.

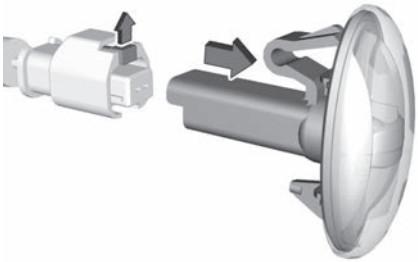

2. Pull the retaining lug upwards and remove the bulb socket from the plug connector.
3. Replace the complete unit.
4. Insert left end of the lamp, slide to the left and insert right end.

Centre high-mounted brake light

Vehicles with hinged doors or tailgate

1. Open the rear doors.
2. a) vehicles with tailgate: Loose the inner trim from clips by swiveling it upwards and downwards. Pull trim off carefully.

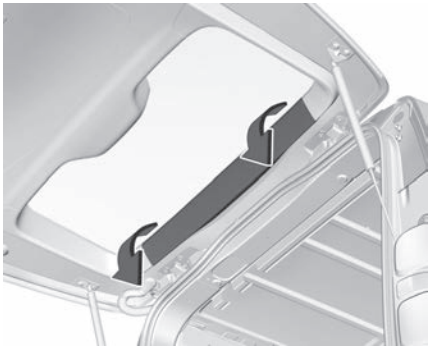

b) vehicles with hinged doors: Wrap a cloth around the tip of a slot screwdriver to prevent paint damage. Remove the inner cover or air vent with the screwdriver.

3. Push the brake light assembly carefully out through the recess.
4. Detach the cable from the retainer in the light assembly.

5. Remove the socket of the defect bulb by turning it a quarter turn anti-clockwise.
6. Renew bulb.
7. Install brake light assembly like explained above, in reversed order.

Number plate light

1. a) vehicles with tailgate:

Insert a thin screwdriver, e.g., in one of the recesses of the cover and push it outwards to unclip it.
Remove the cover.

b) vehicles with hinged doors:

Insert a screwdriver in one of the recesses of the cover and lever it out.
Remove the cover

2. Pull the bulb from the bulb holder and replace it.
3. Attach the cover.

Interior lights

Have the following lights replaced by a workshop:

- courtesy light, reading lights
- load compartment light
- instrument panel illumination

Tires and Wheels

Tire Safety Information

Tire condition, wheel condition

Drive over edges slowly and at right angles if possible. Driving over sharp edges can cause tire and wheel damage. Do not trap tires on the kerb when parking.
Regularly check the wheels for damage. Seek the assistance of a workshop in the event of damage or unusual wear.

Tire Markings - Designations

E.g. 215/65 R17 104H

215	tire width [mm]
65	cross-section ratio (tire height to tire width) (%)
R	belt type (Radial)
17	wheel diameter (inches)
104	load index (e.g. 95 is equivalent to 690 kg)
H	speed code letter

Speed code letter:

Q	up to 100 mph (160 km/h)
S	up to 112 mph (180 km/h)
T	up to 118 mph (190 km/h)
H	up to 130 mph (210 km/h)
V	up to 150 mph (240 km/h)
W	up to 168 mph (270 km/h)

Choose a tire appropriate for the maximum speed of your vehicle.
The maximum speed is achievable at kerb weight with driver (75 kg) plus 125 kg payload.

Winter tires

Winter tires improve driving safety at temperatures below 7 °C and should therefore be fitted on all wheels.
In accordance with country-specific regulations, affix the speed sticker in the driver's field of view, if the tire speed code is below the maximum speed of the vehicle.

Tread depth

Check tread depth at regular intervals. For safety reasons, it is recommended that the tread depth of the tires on one axle should not vary by more than 2 mm.

The legally permissible minimum tread depth (1.6 mm) has been reached when the tread has worn down as far as one of the tread wear indicators (TWI). Their position is indicated by markings on the sidewall.
If there is more wear at the front than the rear, swap round front wheels and rear wheels periodically. Ensure that the direction of rotation of the wheels remains the same.
Tires age, even if they are not used. We recommend tire replacement every six years.

Allowed tire and rim sizes

If tires of a different size than those fitted at the factory are used, it may be necessary to reprogramme the tire deflation detection system and make other vehicle modifications.
Have the label with tire pressures replaced.

⚠ WARNING

The use of unsuitable tires or wheels may lead to accidents and will invalidate the vehicle operating permit.

Wheel Covers

Wheel covers and tires that are factory approved for the respective vehicle and comply with all of the relevant wheel and tire combination requirements must be used.
If the wheel covers and tires used are not factory approved, the tires must not have a rim protection ridge.
Wheel covers must not impair brake cooling.

⚠ WARNING

Use of unsuitable tires or wheel covers could lead to sudden pressure loss and thereby accidents.

Vehicles with steel wheels: When using locking wheel nuts, do not attach wheel covers.

Tire Chains

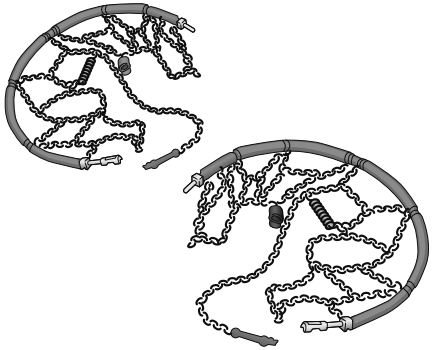

Tire chains are only permitted on the front wheels. The use of tire chains is not permitted on the temporary spare wheel.
Only use tryre chains designed to be used with tire type of the vehicle:

- For 16 inch tires, only use 12 mm link tire chains.
- For 17 inch tires, only use König K-Summit Van K84 tire chains.

ⓘ NOTE

The use of tire chains and the maximum allowed speed is regulated by country-specific legislation.

⚠ WARNING

Damage may lead to tire blowout.

When fitting the tire chains follow the instructions provided by the manufacturer of the tire chains.
After having fitted the tire chains, stop the vehicle after having driven a short distance and make sure that the tire chains are correctly tightened.

Wheel Changing

Make the following preparations and observe the following information:

1. Park the vehicle on a level, firm and non-skid surface. The front wheels must be in the straightahead position.
2. If necessary, place a chock under the wheel diagonally opposite the wheel to be changed.
3. Apply the parking brake and engage first gear, reverse gear or P.
4. If the ground on which the vehicle is standing is soft, a solid board (max. 1 cm thick) should be placed under the jack.
5. Take heavy objects out of the vehicle before jacking up.
6. No people or animals may be in the vehicle when it is jacked-up.
7. Never crawl under a jacked-up vehicle.
8. Do not start the vehicle when it is raised on the jack.
9. Before screwing in the wheel bolts, clean them.

⚠ WARNING

Do not grease wheel bolts.

Jacking positions

The jacking positions shown refer to the use of lifting arms and accessory jacks used for changing winter / summer tires.

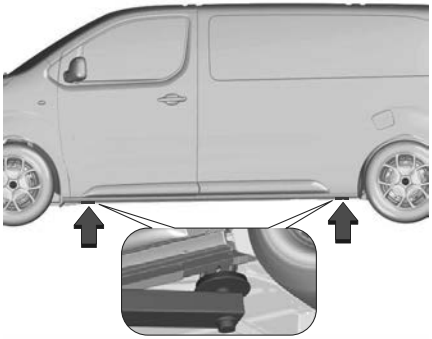

The rear arm position of the lifting platform is centrically under the relevant vehicle jacking point.
The front arm position of the lifting platform is centrically under the relevant vehicle jacking point.

Vehicle Storage

Long-time Storage (ICE)

If the vehicle is to be stored for several months:

1. Fill in one bottle fuel additive Unik+ Diesel into the fuel tank.
2. Fill up fuel tank completely.
3. Drive 35 km to fill the fuel pipe with the mixture.
4. Wash the vehicle.
5. Have the wax in the engine compartment and underbody checked.
6. Clean and preserve the rubber seals.
7. Change the engine oil.
8. Drain the washer fluid reservoir.
9. Check the coolant antifreeze and corrosion protection.
10. Adjust tire pressure to the value specified for full load.

11. Park the vehicle in a dry, well ventilated place. Engage first or reverse gear or set selector lever to P. Prevent the vehicle from rolling.
12. Do not apply the parking brake.
13. Open the bonnet, close all doors and lock the vehicle.
14. Disconnect the clamp from the negative terminal of the vehicle battery. Note that all systems are not functional, e.g. anti-theft alarm system.

Putting back into operation (ICE)

When the vehicle is to be put back into operation:

1. Connect the clamp to the negative terminal of the vehicle battery. Initialize the power windows.
2. Check tire pressure.
3. Fill up the washer fluid reservoir.
4. Check the engine oil level.
5. Check the coolant level.
6. Fit the number plates if necessary.

Long-time Storage (BEV)

If the vehicle is to be stored for several months:

1. Wash the vehicle.
2. Have the wax in the engine compartment and underbody checked.
3. Clean and preserve the rubber seals.
4. Drain the washer fluid reservoir.
5. Check the coolant antifreeze and corrosion protection.
6. Adjust tire pressure to the value specified for full load.
7. Park the vehicle in a dry, well ventilated place. Engage first or reverse gear or set selector lever to P. Prevent the vehicle from rolling.
8. Do not apply the parking brake.
9. Open the hood, close all doors and lock the vehicle.

Up to four weeks

Plug in the charging cable.

Four weeks to twelve months

1. Charge the high voltage battery up to a charging level between 30 % and 50 % before long-time storage (more than four weeks).
2. Do not plug in the charging cable.
3. Always store the vehicle in a place with temperatures between −10 °C and 30 °C.
4. Vehicle storage at extreme temperatures may cause damage to the high voltage battery.
5. Remove the black negative (–) cable from the 12 V vehicle battery and attach a trickle charger to the vehicle battery terminals or keep the 12 V vehicle battery cables connected and trickle charge from the positive (+) and negative (–) terminals in the engine compartment.
6. Every four to six months, check the battery's state of charge. If the charging level is below 30 %, recharge up to a level between 30 % and 50 %.

Putting back into operation
When the vehicle is to be put back into operation:

1. Recharge the high voltage battery up to a charging level of 100 % before starting the vehicle.
2. Connect the clamp to the negative terminal of the 12 V vehicle battery. Initialise the power windows.
3. Check tire pressure.
4. Fill up the washer fluid reservoir.
5. Check the coolant level.
6. Fit the number plate if necessary.

Bodywork-Exterior Care

General recommendations

Observe the following recommendations to avoid damaging the vehicle.

⚠ WARNING

Never use a high-pressure jet wash in the engine compartment - risk of damaging the electrical components!
Do not wash the vehicle in bright sunshine or extremely cold conditions.

ⓘ NOTE

When washing the vehicle in an automatic roller-brush car wash, be sure to lock the doors and, depending on version, move the electronic key away. When using a pressure washer, keep the jet nozzle at a minimum distance of 30 cm from the vehicle (particularly when cleaning areas containing chipped paint, sensors or seals).Promptly clean up any stains containing chemicals liable to damage the vehicle's paintwork (including tree resin, bird droppings, insect secretions, pollen and tar).Depending on the environment, clean the vehicle frequently to remove salty deposits (in coastal areas), soot (in industrial areas) and mud/salts (in wet or cold areas). These substances can be highly corrosive. Contact a dealer or a qualified workshop for advice on removing stubborn stains requiring special products (such as tar or insect removers).Preferably, have paint touch-ups performed by a dealer or a qualified workshop.

Locks

The locks are lubricated at the factory using a high quality lock cylinder grease. Use a de-icing agent only when absolutely necessary, as this has a degreasing effect and impairs lock function. After using a de-icing agent, have the locks regreased by a workshop.

Washing

The paintwork of your vehicle is exposed to environmental influences. Bird droppings, dead insects, resin, pollen and the like should be cleaned off immediately, as they contain aggressive constituents which can cause paint damage.
If using a vehicle wash, comply with the vehicle wash Manufacturer's instructions. The windshield wiper and rear window wiper must be switched off. Remove antenna and external accessories such as roof racks etc.
If you wash your vehicle by hand, make sure that the insides of the wheel housings are also thoroughly rinsed out.
Clean edges and folds on opened doors and the bonnet as well as the areas they cover.
Clean bright metal mouldings with a cleaning solution approved for aluminium to avoid damages.

⚠ CAUTION

Always use a cleaning agent with a pH value of 4 to 9.
Do not use cleaning agents on hot surfaces.

Do not clean the engine compartment with a steam-jet or high-pressure jet cleaner.
Thoroughly rinse and leather-off the vehicle. Rinse leather frequently. Use separate leathers for painted and glass

surfaces: remnants of wax on the windows will impair vision.
Have the door hinges of all doors greased by a workshop.
Do not use hard objects to remove spots of tar. Use tar removal spray on painted surfaces.

Exterior lights

Headlight and other light covers are made of plastic. Do not use any abrasive or caustic agents, do not use an ice scraper, and do not clean them dry.

Polishing

Polishing is necessary only if the paint has become dull or if solid deposits have become attached to it.
Plastic body parts must not be treated with wax or polishing agents.

Windows and wiper blades

Switch off wipers before handling in their areas.
Use a soft lint-free cloth or chamois leather together with window cleaner and insect remover.
When cleaning the rear window from inside, always wipe in parallel to the heating element to prevent damage.
For mechanical removal of ice, use a sharp-edged ice scraper. Press the scraper firmly against the glass so that no dirt can get under it and scratch the glass.
Clean smearing wiper blades with a soft cloth and window cleaner. Also make sure to remove any residues such as wax, insect residues and similar from the window.
Ice residues, pollution and continuous wiping on dry windows will damage or even destroy the wiper blades.

Glass panel

Use a soft lint-free cloth or chamois leather together with window cleaner to clean the glass panel.

Wheels and tires

Do not use high-pressure jet cleaners.
Clean rims with a pH-neutral wheel cleaner.
Rims are painted and can be treated with the same agents as the body.

Paintwork damage

Rectify minor paintwork damage with a touch-up pen before rust forms.
Have more extensive damage or rust areas repaired by a workshop.

Underbody

Some areas of the vehicle underbody have a PVC undercoating while other critical areas have a durable protective wax coating.
After the underbody is washed, check the underbody and have it waxed if necessary.
Bitumen / rubber materials could damage the PVC coating. Have underbody work carried out by a workshop.
Before and after winter, wash the underbody and have the protective wax coating checked.

Liquid gas system

⚠ DANGER

Liquid gas is heavier than air and can collect in sink points.
Take care when performing work at the underbody in a pit.

For painting work and when using a drying booth at a temperature above 60 °C, the liquid gas tank must be removed.
Do not make any modifications to the liquid gas system.

Towing equipment

Do not clean the coupling ball bar with a steam-jet or high-pressure jet cleaner.

High Gloss Paint

Use a soft cloth and soapy water or a pH neutral product.
Gently wipe the bodywork with a clean microfibre cloth.
Apply polish with the vehicle clean and dry. Comply with the instructions for use stated on the product.

Decals

⚠ WARNING

Do not use a high-pressure washer to clean the vehicle - risk of damaging or detaching the decals!

ⓘ NOTE

Use a high-flow hose (temperature between 25°C and 40°C).
Place the jet of water perpendicular to the surface to be cleaned.
Rinse the vehicle with demineralised water.

Interior Care

General recommendations

Observe the following recommendations to avoid damaging the vehicle.

⚠ WARNING

When washing the vehicle, never use a water hose or high-pressure jet to clean the interior.
Liquids carried in cups or other open containers can spill, presenting a risk of damage to the instruments and controls and the controls located on the centre console. Be vigilant!
To clean instrument panels, touch screens or other displays, wipe gently with a soft, dry cloth. Do not use products (e.g. alcohol, disinfectant) or soapy water directly on these surfaces - risk of damage!

Only clean the vehicle interior, including the instrument panel fascia and panelling, with a dry cloth or interior cleaner.

Seat belts maintenance

Clean seat belts with lukewarm water or interior cleaner.

⚠ CAUTION

Close Velcro fasteners as open Velcro fasteners on clothing could damage seat upholstery.
The same applies to clothing with sharp-edged objects, like zips or belts or studded jeans.

Plastic and coated parts

Plastic and rubber parts can be cleaned with the same cleaner as used to clean the body. Use interior cleaner if necessary. Do not use any other agent. Avoid solvents and petrol in particular. Do not use highpressure jet cleaners.

Instrument cluster and displays

The instrument cluster and the displays should only be cleaned using a soft damp cloth. If necessary use a weak soap solution.

Glass surfaces

Use a soft lint-free cloth or chamois leather together with window cleaner to clean the glass panel.

Fabric parts

Clean fabric upholstery with a vacuum cleaner and brush. Remove stains with an upholstery cleaner.
Clothing fabrics may not be colour-fast. This could cause visible discolourations, especially on lightcoloured upholstery. Removable stains and discolourations should be cleaned as soon as possible.

Leather surfaces

Clean the leather upholstery with clear water and a soft cloth. In case of heavy soiling, use leather care.

Floor materials

⚠ WARNING

If a floor mat has the wrong size or is not properly installed, it can interfere with pedals, what can cause unintended acceleration or increased stopping distance which can cause a crash and injury.

Use the following guidelines for proper floor mat usage.

- The original equipment floor mats were designed for this vehicle. If the floor mats need to be replaced, it is recommended to buy certified floor mats which fit
  properly and are fixed by the retainers on the driver side. Always check that the floor mats do not interfere with the pedals.
- Use the floor mat with the correct side up. Do not turn it over.
- Do not place anything on top of the driver side floor mat.
- Use only a single floor mat on the driver side.
- Do not place one floor mat on top of another.

Inserting and removing the floor mats

The driver side floor mat is held in place by two retainers.

Installing

To install the driver's side floor mat:

1. Move the driver's seat backwards as far as possible.

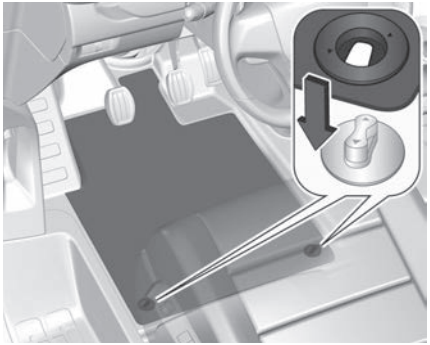

2. Align slots in the mat with the retainers, as shown.

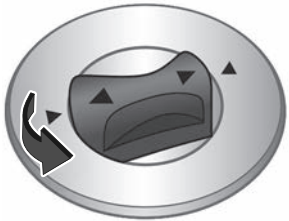

3. Turn retainers anti-clockwise for a quarter turn.

Removing

To remove the driver's side floor mat:

1. Move the driver's seat backwards as far as possible.

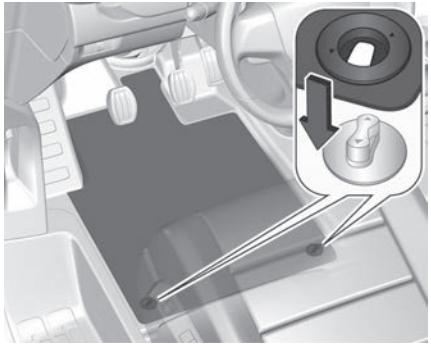

2. Align slots in the mat with the retainers, as shown.

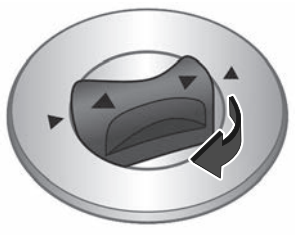

3. Turn retainers clockwise for a quarter turn.

TECHNICAL SPECIFICATIONS

Vehicle Identification

Vehicle Identification Number (VIN)

The Vehicle Identification Number may be embossed on the instrument panel, visible through the windshield.

License Plate

The identification plate is located on the front left or right door frame. The layout and position differ for some export countries.

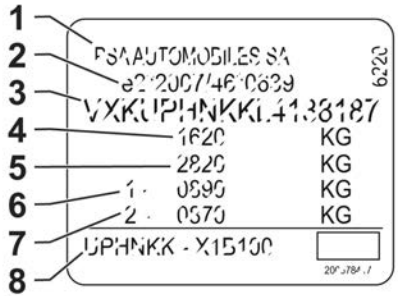

Information on identification label:

1 Manufacturer

2 Type approval number

3 Vehicle identification number

4 Permissible gross vehicle weight rating in kg

5 Permissible gross train weight in kg

6 Maximum permissible front axle load in kg

7 Maximum permissible rear axle load in kg

8 Manufacturer address, vehicle specific or country-specific data

The combined total of front and rear axle loads must not exceed the permissible gross vehicle weight.
Vehicle's kerb weight depends on the specification of the vehicle, e.g. optional equipment and accessories.
Refer to the Certificate of Conformity provided with your vehicle or other national registration documents.
The technical data is determined in accordance with European Community standards. We reserve the right to make modifications.
Specifications in the vehicle documents always have priority over those given in this manual.

Engine Identification

The technical data tables show the engine identifier code.
To identify the respective engine, refer to the engine power in the Certificate of Conformity provided with your vehicle or other national registration documents.

Tire Information Label

The tire pressure label indicates the unladen and laden tire inflation pressures. This label is affixed to the driver's door aperture.

Vehicle Data

Dimensions

Panel Van version

External dimensions

	L2	L3
Maximum length [mm]	4980	5330
Width (excluding mirrors) [mm]	1920	1920
Width (including mirrors) [mm]	2204	2204
Height [mm]	1895	1935
Wheelbase [mm]	3277	3277
Overhang front / rear [mm]	901 / 802	901 / 1152
Track front / rear [mm]	1627 / 1600	1627 / 1600

Load compartment dimensions

	L2	L3
Length of load compartment floor [mm]	2512 / 3674*	2862 / 4026*
Maximum width / width between wheel arches [mm]	1628 / 1258	1628 / 1258
Load Height [mm]	1397	1397
Load threshold height [mm]	608	628
Rear door: width / height [mm]	1282 / 1220	1282 / 1220
Side door: width / height [mm]	935 / 1241	935 / 1241

(*): Length of load compartment floor with folded last seat row

Crew Cab version

Foldable Crew Cab

External dimensions

	L2	L3
Maximum length [mm]	4980	5330
Width (excluding mirrors) [mm]	1920	1920
Width (including mirrors) [mm]	2204	2204
Height [mm]	1895 / 1935	1935
Wheelbase [mm]	3277	3277
Overhang front / rear [mm]	901 / 802	901 / 1152
Track front / rear [mm]	1627 / 1600	1627 / 1600

Load compartment dimensions

	L2	L3
Length of load compartment floor [mm]	2018 / 2029*	2367 / 2376*
Maximum width / width between wheel arches [mm]	1356 / 1953	1704 / 2302
Load Height [mm]	1618 / 1258	1618 / 1258
Load threshold height [mm]	1337	1339
Rear door: width / height [mm]	1282 / 1220	1282 / 1220

Side door: width / height [mm]	935 / 1181	935 / 1181

(*): Length of load compartment floor with folded last seat row

Comfort Crew Cab (Fixed 2nd Row)

External dimensions

	L2	L3
Maximum length [mm]	4980	5330
Width (excluding mirrors) [mm]	1920	1920
Width (including mirrors) [mm]	2204	2204
Height [mm]	1895 / 1935	1935
Wheelbase [mm]	3277	3277
Overhang front / rear [mm]	901 / 802	901 / 1152
Track front / rear [mm]	1627 / 1600	1627 / 1600

Load compartment dimensions

	L2	L3
Length of load compartment floor [mm]	1790	2140
Maximum width / width between wheel arches [mm]	1352	1700
Load Height [mm]	1618 / 1258	1618 / 1258
Load threshold height [mm]	1337	1339

Rear door: width / height [mm]	1282 / 1220	1282 / 1220
Side door: width / height [mm]	935 / 1181	935 / 1181

Platform Cab

External dimensions

Maximum length [mm]	4840 / < 5236*
Width (excluding mirrors) [mm]	1920 / < 1970*
Width (including mirrors) [mm]	2204
Height [mm]	1899 / < 2600*
Wheelbase [mm]	3277
Overhang front / rear [mm]	901 / 802
Track front / rear [mm]	1627 / 1600

(*): Maximum measure after conversion

Combi - Shuttle - VIP Shuttle

External dimensions

	L2	L3
Maximum length [mm]	4983	5333
Width (excluding mirrors) [mm]	1920	1920
Width (including mirrors) [mm]	2204	2204
Height [mm]	1890 / 1930	1890 / 1940
Wheelbase [mm]	3277	3277
Overhang front / rear [mm]	904 / 802	904 / 1153

Load compartment dimensions

	L2		L3	
Maximum Load Length behind last row [mm]				
8/9 Seater (3 Rows)	608	958	608	958
5/6 Seater (2 Rows)	1488	1838	1488	1838
Behind Row 1 (w/o Rows 2 & 3)	2413	2763	2413	2763
Maximum width / width between wheel arches [mm]	1618 / 1228	1618 / 1228	1618 / 1228	1618 / 1228
Trunk Volume in Ltr (VDA Std)				
8/9 Seater (3 Rows)	655	1237	655	1237
5/6 Seater (2 Rows)	2228	2787	2228	2787

Engine Data

Engine	DV5RUC - ML6 - STT		B22LD - ML6C		B22LD - AMN8L		BL22C - AM BL22C - AMN		B22LD - ML6C
Transmission	Manual 6-speed				Automatic 8-speed				Manual 6-speed
Emission standard level	Euro 6.4eBIS		Euro 5 Euro 6.1 Euro 6.4eBIS		Euro 5 Euro 6.1 Euro 6.4eBIS		Euro 6.4eBIS		Euro 6.4eBIS
Engine capacity [m^3]	1,499		2,184		2,184		2,184		2,184
Max power [kW / rpm]	88 / 3500		110 / 3500		110 / 3500		132 / 3500		110 / 1500
Fuel	Diesel		Diesel		Diesel		Diesel		Diesel
Version	L2	L3	L2	L3	L2	L3	L2	L3	REINFORCED PAYLOAD L2
Max torque [Nm / rpm]	300 / 1750		370 / 1750		370 / 1750		400 / 1500		370 / 1750

Electric motor

Electric motor type / poles number	Synchronous with permanent magnets / 4 poles	
High voltage battery capacity [kWh]	49 kW	75 kW
High voltage battery technology	Lithium-Ion	
Payload	Standard / Increased	Standard / Increased
Max. power : EC standard [kW]	100	
Max torque [Nm / rpm]	270 / 500 - 3530	
Version	L2 / L3	L2 / L3

Towed loads

The weights and towed loads relating to the vehicle are indicated on the registration document, as well as in sales brochures.
These values are also indicated on the manufacturer's plate or label.
For more information, contact a dealer or a qualified workshop.
The GTW (Gross Train Weight) and towed load values indicated are valid up to a maximum altitude of 1,000 meters. The towed load value must be reduced by 10% for each additional 1,000 meters of altitude.
The maximum authorized nose weight corresponds to the weight permitted on the tow ball.

⚠ WARNING

When exterior temperatures are high, the vehicle performance may be limited in order to protect the engine. When the exterior temperature is higher than 37°C, reduce the towed weight.

⚠ WARNING

Towing even with a lightly loaded vehicle can adversely affect its road holding.
Braking distances are increased when towing a trailer.
When using a vehicle to tow, never exceed a speed of 62 mph (100 km/h) (observe the local legislation in force).

Version	Engine	A	B	C
L2	B22LD BL22C	2300 / 2500 (600*) (1500**)	600 (750**)	80 (88**)
	DV5RUC	2000	600	80
L3	B22LD BL22C	2500 (600*) (1500**)	600 (750**)	80 (88**)
	DV5RUC	2000	600	80

Version	Engine	A	B	C
L2 (Combi - Shuttle - VIP shuttle)	B22LD	1800 / 1900 (600*) (1500**)	600	80
L3 (Combi - Shuttle - VIP shuttle)	B22LD	1800 / 1900 (600*) (1500**)	600	80
REINFORCED PAY-LOAD L2	B22LD	1900 (600*) (1500**)	600	80

(*) Emission classes E5, E6.1
(**) Australia market
Key:

A = Braked trailer (within the GTW limit) [kg] on a 10% or 12% gradient

B = Unbraked trailer [kg]

C = Maximum authorized noise weight [kg]

Fluids and lubricants

Your vehicle is equipped with an engine oil that has been thoroughly developed and tested in order to meet the requirements of the Scheduled Servicing Plan. Constant use of the prescribed lubricants guarantees the fuel consumption and emission specifications. Lubricant quality is crucial for engine operation and duration.

⚠ WARNING
The use of products with specifications other than those indicated above could cause damage to the engine not covered by the warranty.

Engine type	Viscosity grades	Specification	Recommended product
Diesel engine lubricants B22L	SAE 0W-30	FPW 9.55535/02	Quartz Mopar FPW 02
Diesel engine lubricants DV5RUC	SAE 5W-30	FPW 9.55535/03	Quartz Mopar FPW 03

If lubricants conforming to the required specification are not available, products that meet the indicated specifications can be used to top up; in this case optimal performance of the engine is not guaranteed.

Type	Features	Specification	Original liquids and lubricants	Application
Protective agent for radiators	Red protective with antifreeze action, based on inhibited monoethyl glycol with organic formula. Exceeds CUNA NC 956-16, ASTM D 3306 specifications.	9.55523 or MS.90032	Contact a dealer or a qualified workshop	Cooling circuits. Use rate 50% up to -35°C. Mixture with different formulation products not allowed. (*)
Diesel fuel additive	Additive for diesel antifreeze, protecting Diesel engines.	–		To be mixed with diesel (25 cc per 10 liters)
AdBlue® (UREA) additive for diesel emissions	Water-AdBlue® (UREA) solution	DIN 70 070 and ISO 22241-1		To be used for filling the AdBlue® (UREA) tank on vehicles equipped with Selective Catalytic Reduction (SCR) system.
Windshield washer fluid	Mixture of spirits and surfactants. Exceeds the CUNA NC 956-II specification	MS.90043		To be used neat or dilute in screen washer systems.

(*) When the vehicle is used in particularly harsh weather conditions, we recommend using a 60% mixture of protective and 40% demineralised water.

Recommended Fluids ⇨ 235
Fluid Capacities ⇨ 283

Fluid Capacities

Engine oil

Engine	DV5RUCd DV5RUC	BL22D BL22C B22LDH0 B22LCH0
Including filter (l)	5,75	6,0
Between MIN and MAX (l)	1	1,2

Fuel tank

Diesel, refilling quantity (l)	69

AdBlue tank

AdBlue, refilling quantity (l)	19 / 20

Recommended Fluids ⇨ 235
Vehicle Maintenance ⇨ 245
Fuel ⇨ 158

Wheels and Tires

Compatibility of Wheels And Tires

225/55 R 18 98 V

225	Tire width, mm
55	Cross-section ratio (tire height to tire width), %
R	Belt type: Radial
RF	Type: Run Flat
18	Wheel diameter, inches
98	Load index e.g. 98 is equivalent to 750 kg
V	Speed code letter

Speed code letter:

Q	Up to 160 km/h
S	Up to 180 km/h
T	Up to 190 km/h
H	Up to 210 km/h
V	Up to 240 km/h
W	Up to 270 km/h

Choose a tire appropriate for the maximum speed of your vehicle.
Refer to the Certificate of Conformity provided with your vehicle or other national registration documents.
Optional equipment could reduce the maximum speed of the vehicle.

Directional tires

Directional tires should be mounted so that they rotate in the correct direction. The proper rotation direction is indicated by a symbol (e.g. an arrow) on the sidewall.

Tightening Torques

⚠ CAUTION

If the vehicle is equipped with alloy wheel rims, tighten the wheel bolts manually at least for the first five turns.

Depending on the wheel rim material, two different bolts with different tightening torques are available.

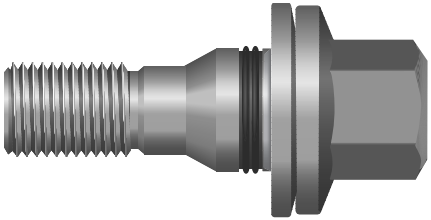

Tightening torque for alloy wheel rims is 125 Nm.

Tightening torque for steel wheel rims is 125 Nm.
Use the correct wheel bolts for the respective wheel rims.

Tire Pressures

Check the pressure of cold tires at least every 14 days and before any long journey. Do not forget the spare wheel.
This also applies to vehicles with tire pressure monitoring system.
The tire pressure information label on the left or right door frame indicates the

original equipment tires and the correspondent tire pressures.
The tire pressure data refers to cold tires. It applies to summer and winter tires.
Always inflate the spare tire to the pressure specified for full load.
Incorrect tire pressures will impair safety, vehicle handling, comfort and fuel economy and will increase tire wear.
Tire pressures differ depending on various options. For the correct tire pressure value, follow the procedure below:

- Identify the payload.
- Identify the respective tire.

The tire pressure tables show all possible tire combinations.
For the tires approved for your vehicle, refer to the Certificate of Conformity provided with your vehicle or other national registration documents.
The driver is responsible for correct adjustment of tire pressure.

⚠ WARNING

If the pressure is too low, this can result in considerable tire warmup and internal damage, leading to tread separation and even to tire blow-out at high speeds.

⚠ WARNING

For specific tires the recommended tire pressure as shown in the tire pressure table may exceed the maximum tire pressure as indicated on the tire.
Never exceed the maximum tire pressure as indicated on the tire.

Temperature dependency

The tire pressure depends on the temperature of the tire. During driving, tire temperature and pressure increase.
Tire pressure values provided on the tire information label and tire pressure chart are valid for cold tires, which means at 20 °C.
The pressure increases by nearly 10 kPa for a 10 °C temperature increase.
This must be considered when warm tires are checked.

CUSTOMER INFORMATION

Declaration of Conformity

This vehicle has radio equipment that transmit and / or receive radio waves subject to Directive 2014/53/EU.
No regional restriction applies on putting the equipment into service regarding Article 10 § 10 Directive 2014/53/EU.
The full text of the EU declaration of conformity is available at the following internet address: https://public-servicebox.opel.com/OVddb/OV/en_GB/index.html
Importer is Opel Automobile GmbH, Bahnhofsplatz, 65423 Ruesselsheim am Main, Germany.

Radars

Manufacturer:

ZF

Avenue du Technopole, ZAC Technopole BREST-Iroise, Secteur de la Pointe du Diable
29280 Plouzané, France

- Operating Frequencies: 76.0 GHz - 77.0 GHz
- Max power: 16.5 dBm

Radio & Infotainment System

RCE

Manufacturer:

Shenzhen Hangsheng Electronic Company Ltd.

Hangsheng Industrial Area,Fuyuan 1Rd., Fuyong Town, Baoan District Shenzhen City

- Operating Frequencies: 2402 - 2480MHz
- Max power: -1.10dBi

IVI

HUAIDP10BY

Manufacturer:

MARELLI EUROPE S.p.A

Viale Aldo Borletti 61/63, 20011 Corbetta (MI), Italy

Operating Frequencies:

- Bluetooth:
  - Emission: 2400-2483.5 MHz
  - Reception: 2400-2483.5 MHz

Max power:

- Bluetooth 4.0 dBm PIRE

Immobiliser

BSI

Manufacturer:

Aptiv Services Deutschland GmbH

Am Technologiepark 1 D, 42119 Wuppertal, Germany

Operating Frequencies:

- Min: 122,8 KHz
- Typ: 125 KHz
- Max: 127,2 KHz

Max power: 65W

TCM

Manufacturer:

Valeo Schalter und Sensoren GmbH

Laiernstrasse 12, 74321 Bietigheim-Bissingen, Germany

Operating Frequencies: Min : 125kHz +/-3.2kHz (Transmitter and receiver), 433.92MHz +/-40kHz (Receiver)

Max power: N/A

BTA Emergency call

TBATBP40B0 / TBATBP40B1

Manufacturer:

MARELLI EUROPE S.p.A

Viale Aldo Borletti 61/63, 20011 Corbetta (MI), Italy

Maximum Transmitted Power:

- GSM 900 => 33 dBm
- GSM 1800 => 30 dBm
- WCDMA Band I => 24 dBm
- WCDMA Band VIII => 24 dBm
- LTE FDD Band 1 => 23 dBm
- LTE FDD Band 3 => 23 dBm
- LTE FDD Band 7=> 23 dBm
- LTE FDD Band 8=> 23 dBm
- LTE FDD Band 20=> 23 dBm
- LTE FDD Band 28=> 23 dBm
- LTE FDD Band 38=> 23 dBm
- LTE FDD Band 40=> 23 dBm

Frequency band:

- GSM 900 : 880 ÷ 915 MHz, 925 ÷ 960 MHz
- GSM 1800 : 1710 ÷ 1785 MHz,1805 ÷ 1880 MHz
- WCDMA Band I : 1920 ÷ 1980 MHz, 2110 ÷ 2170 MHz
- WCDMA Band VIII : 880 ÷ 915 MHz, 925 ÷ 960 MHz
- LTE FDD Band 1 : 1920 ÷ 1980 MHz, 2110 ÷ 2170 MHz
- LTE FDD Band 3 : 1710 ÷ 1785 MHz,1805 ÷ 1880 MHz
- LTE FDD Band 7 : 2500 ÷ 2570 MHz,2620 ÷ 2690 MHz
- LTE FDD Band 8 : 880 ÷ 915 MHz, 925 ÷ 960 MHz
- LTE FDD Band 20 : 832 ÷ 862 MHz, 791 ÷ 821 MHz
- LTE FDD Band 28 : 703 ÷ 748 MHz, 758 ÷ 803 MHz
- LTE FDD Band 38 : 2570÷2620 MHz
- LTE FDD Band 40 : 2300÷2400 MHz

Telematic box

BSRF

Manufacturer:

Continental Automotive GmbH

Siemensstrasse 12, 93055 Regensburg, Germany

Operating Frequencies:

- FM: 87,5 - 108 MHZ
- AM: 148,5 - 283,5 kHZ, 526,5 - 1606,5 kHz
- DAB: 174 - 240 MHz
- WIFI: 2,4GHz et 5GHz
- LTE: (1.4 MHz 3 MHz 5 MHz 10 MHz 15 MHz 20 MHz)
- GNSS: 1559-1610 MHz

Max power: GSM (33 dBm +/- 2 dB), LTE/WCDMA (23 dBm +/- 2 dB)

RTMB

Manufacturer:

FIH Co., Ltd

No.4, Minsheng St., Tucheng Dist., 236 New Taipei City, Taiwan

Wi-Fi

802.11b/g/n (2.4 GHz)

- Frequencies: 2412 – 2472 MHz
- Max Power: 18.83 dBm

802.11a/n/ac (5 GHz)

- Frequencies: 5180 – 5240 MHz
- Max Power: 15.99 dBm

SRD

- Frequencies: 5745 – 5825 MHz
- Max Power: 13.93 dBm

GSM 900

- Frequencies: 880–915 MHz (emitter) / 925–960 MHz (receiver)
- Max Power: 33 dBm (nominal value)

GSM 1800

- Frequencies: 1710–1785 MHz (emitter) / 1805–1880 MHz (receiver)
- Max Power: 30 dBm (nominal value)

WCDMA Band I

- Frequencies: 1920–1980 MHz (emitter) / 2110–2170 MHz (receiver)
- Max Power: 24 dBm (nominal value)

WCDMA Band VIII

- Frequencies: 880–915 MHz (emitter) / 925–960 MHz (receiver)
- Max Power: 24 dBm

LTE FDD Band 1

- Frequencies: 1920–1980 MHz (emitter) / 2110–2170 MHz (receiver)
- Max Power: 23 dBm

LTE FDD Band 3

- Frequencies: 1710–1785 MHz (emitter) / 1805–1880 MHz (receiver)
- Max Power: 23 dBm

LTE FDD Band 7

- Frequencies: 2500–2570 MHz (emitter) / 2620–2690 MHz (receiver)
- Max Power: 23 dBm

LTE FDD Band 8

- Frequencies: 880–915 MHz (emitter) / 925–960 MHz (receiver)
- Max Power: 23 dBm

LTE FDD Band 20

- Frequencies: 832–862 MHz (emitter) / 791–821 MHz (receiver)
- Max Power: 23 dBm

LTE FDD Band 28

- Frequencies: 703–748 MHz (emitter) / 758–803 MHz (receiver)
- Max Power: 23 dBm

Telecommand & Telemetry

Manufacturer:

Valeo Comfort and Driving Assistance

76, rue Auguste Perret 94046 Créteil - CEDEX, France

Operating Frequencies:

- 433,05…434,79MHz
- 125kHz 2402…2480MHz

Max power:

- 10 dBm /-6,85 dBm
- 125kHz: -7,3 dBm

Radio Antenna

Internal patch antenna

Manufacturer:

Fuba Automotive Electronic GmbH

TecCenter, 31162 Bad Saizdetfurth, Germany

Operating Frequencies:

- GNSS: 1164-1215 MHz max LNA gain 22 dB
- GNSS: 1559-1605 MHz max LNA gain 22 dB

Max power: 5 dBi

Shark Antenna

Manufacturer:

TE-CONNECTIVITY

45-51 Stuttgarter Strasse D-72654, Neckartenzlingen, Germany

- AM : 144-1710 KHz
- FM : 87-108 MHz
- DAB Bd3 : 174-240 MHz
- DAB Bd L : 1452-1492 MHz
- GNSS : 1575-1605 MHz

Wireless Charger

Manufacturer:

Adayo

No.1 North Shangxia Road, Dongjiang Hi-tech Industry Park, Huizhou, Guangdong Province, 516005, P R, China

- Operating Frequencies: 127.7kHz
- Max power: 15W

ICASA type approval numbers

List of all Independent Communications Authority of South Africa (ICASA) type approval numbers: TA-2016/121, TA-2016/3261, TA-2017/2387,TA-2017/2745, TA-2013/430, TA-2017/1106, TA-2016/929, TA-2017/3180

Fuel consumption and CO_2 Emissions

ICE The fuel consumption (combined) is within a range of 8.2 to 6.2 l/100 km. The CO2 emission is within a range of 200 to 163 g/km.

General information

For the values specific to your vehicle, refer to the Certificate of Conformity provided with your vehicle or other national registration documents.
The determination of fuel consumption is regulated by directive R (EC) No. 715/2007 and No. 2017/1151 (in the latest applicable version).
The specification of CO_2 emission is also a constituent of the directive.

The figures given must not be taken as a guarantee for the actual fuel consumption of a particular vehicle. Furthermore, fuel consumption is dependent on personal driving style as well as road and traffic conditions.
All values are based on the EU base model with standard equipment.
The calculation of fuel consumption takes into account the vehicle's kerb weight, ascertained in accordance with the regulations. Optional equipment may result in slightly higher fuel consumption and CO2 emission levels and a lower maximum speed.

Disposal Prescriptions

(where present)
The Manufacturer has been committed for many years to safeguarding the environment through the constant improvement of its production processes and manufacturing products that are increasingly "eco-compatible". To grant customers the best possible service in terms of respecting environmental laws and in response to European Directive 2000/53/EC governing vehicles at the end of their life, the Manufacturer is offering its customers the chance to hand over their vehicle at the end of its life

without incurring any additional costs. The European Directive sets out that when the vehicle is handed over, the last keeper or owner should not incur any expenses as a result of it having a zero or negative market value.
To hand your vehicle over at the end of its life without extra cost, contact one of our dealerships if you are purchasing another vehicle or a collection and scrapping centre authorised by the Manufacturer. These centres have been carefully chosen to offer high quality service for the collection, treatment and recycling of vehicles at their end of life, respecting the surrounding environment.
Similarly, to meet its obligations under European Directive 2006/66/EC on batteries, the Manufacturer requires you to comply with the national regulations on handling both low-voltage (12 V and 48 V) and high-voltage lithium ion batteries at all times.
This includes consigning vehicles complete with their batteries to one of the collection and demolition centers authorized by the Manufacturer to handle such batteries, and not disposing of them improperly, which could lead to personal injuries and/or harm to the environment.
You can find further information on these collection and scrapping centers either from a dealer or by calling the number in the Service Booklet or by consulting the websites of the various the Manufacturer brands.

REACH

Registration, Evaluation, Authorisation and Restriction of Chemicals (REACH) is a European Union regulation adopted to improve the protection of human health and the environment from the risks that can be posed by chemicals. Visit https://public-servicebox.opel.com/OVddb/OV/en_GB/index.html for further information and for access to the Article 33 communication.

Registered trademarks

Apple Inc.

Apple CarPlay™ is a trademark of Apple Inc.
App Store® and iTunes Store® are registered trademarks of Apple Inc.
iPhone®, iPod®, iPod touch®, iPod nano®, iPad® and Siri® are registered trademarks of Apple Inc.

Bluetooth SIG, Inc.

Bluetooth® is a registered trademark of Bluetooth SIG, Inc.

Google Inc.

Android™ and Google Play™ Store are trademarks of Google Inc.

Verband der Automobilindustrie e.V.

AdBlue® is a registered trademark of the VDA.

Vehicle Data Recording and Privacy

Introduction

Electronic control units are installed in your vehicle. These control units process data received from the vehicle's sensors, for example, or data they generate themselves or exchange with each other. Some of these control units are required for the correct operation of your vehicle, some others assist you while driving (driving or manoeuvring aids), while others provide comfort or infotainment functions.

The following contains general information about how data is processed within the vehicle.
You will find additional information about the specific data which is downloaded, stored and transmitted to third parties and what it is used for in your vehicle under the keyword "Data protection". This information is directly associated with the references for the functions in question contained in the corresponding vehicle handbook. These are also available in the general terms of sale of the vehicle, in the general terms of sale of connected services, or online on brand website.

Personal reference

Each vehicle is identified by means of a unique chassis number. Further options, such as thevehicle's number plate, make it possible to trace data on the keeper or driver of the vehicle.
The data generated or processed by control units may therefore be personal, or be made personal under certain conditions. Depending on what vehicle data is available, conclusions may be drawn on information such as your driving behavior, your location or the route you travel, or on your usage behavior.

Operating data in the vehicle

The control units process the data used for the operation of the vehicle.
This data includes, for example:

- Information about the state of the vehicle (e.g. speed, travel time, lateral acceleration, wheel rotation rate, fastened seat belts display).
- Environmental conditions (e.g. temperature, rain sensor, distance sensor).

As a general rule, this data is temporary, is not stored for longer than one operating cycle and is only used within the vehicle itself. The control units often record this data (including the vehicle's key). This function allows either the temporary or permanent storage of information about the state of the vehicle, stresses on components, servicing requirements, as well as events and technical errors.

Emergency Call Data Recording and Privacy

Data processing

All processing of personal information by the emergency call function complies with the framework for protection of personal information established by regulation 2016/679 (GDPR) and directive 2002/58/EC of the European Parliament and the Council, and in particular, seeks to protect the vital interests of the data subject, in accordance with article 6.1, paragraph d) of regulation 2016/679.
The processing of personal information is strictly limited to the requirements of the emergency call function used with the European emergency call number.
The emergency call function is only able to collect and process the following data relating to the vehicle: chassis number, type (passenger vehicle or light commercial vehicle), fuel type or power source, three most recent locations and direction of travel, number of passengers and a timestamped log file recording technical data related to the system's operation.
The recipients of the processed data are the emergency call handling centres designated by the relevant national authorities in the territory in which they are located, enabling priority routing and handling of calls to the emergency number.

Data storage

Data contained in the system’s memory is not accessible from outside the system until a call is made. The system is not traceable and is not continuously monitored in its normal operation mode. The data in the system's internal memory is automatically and continuously erased. Only the vehicle’s three most recent locations, necessary for the normal functioning of the system, are stored.
When an emergency call is triggered, the data log is stored for no more than 13 hours.

Access to data

You have the right to access the data and, if necessary, submit a request to rectify, erase or restrict the processing of any personal information not processed in accordance with the provisions of Regulation 2016/679 (GDPR). Third parties to which data has been communicated shall be notified of any rectification, erasure or restriction carried out in accordance with the aforementioned directive, unless doing so would be impossible or require a disproportionate effort.

You also have the right to lodge a complaint with the relevant data protection authority.
If you want to claim your abovementioned rights please contact us per email at privacyrights@mpsa.com.
For more information regarding our contact details please take a look at our Privacy & Cookies Policy on our website.

Technical data of the vehicle

Depending on the vehicle's equipment level, the data stored is as follows:

- Operating state of system components (e.g. filling level, tire pressures, battery charge status).
- Faults and malfunctions in important system components (e.g. lights, brakes).
- System reactions in specific driving situations (e.g. deployment of an airbag, triggering of stability control and braking systems).
- Information about events which have damaged the vehicle.
- For electric and rechargeable hybrid vehicles, the traction battery charge level and the estimated driving range.
- Cyber-security events (e.g. unexpected established connections with unknown systems, unexpected reboots, and any abnormal system configurations).
- Exact mileage or timestamp of recorded events (detection of internal malfunctions, activation of specific systems, etc.), allowing to locate them in time.
- Dynamic data recorded few seconds before and after specific driving events, such as accidents, collisions or activations of Advanced Driver Assistance Systems (ADAS): driving data (e.g. speed, acceleration, steering angle, engine speed, selected ratio on the gearbox, pedals pressure), and potential very low-resolution pictures of the sight in front of the vehicle (only if ADAS Data Recorder (ADR) system is activated).

In particular circumstances (e.g. if the vehicle has detected a malfunction), it may be necessary to record data which would otherwise simply not be stored.

Maintenance and repair activities

When taking your vehicle in for servicing (e.g. repairs, maintenance), the stored operating data may be read

along with the vehicle's identification number and used if necessary. The personnel working for the servicing network (e.g. garages, manufacturers) or third parties (e.g. roadside assistance agents) may read the vehicle's data. This also applies to work carried out under warranty and quality assurance measures.
This data is generally read via the OBD (On-Board Diagnostics) port fitted by law to the vehicle. It is used to report on the technical state of the vehicle or its components and facilitates the diagnosis of malfunctions, in compliance with warranty obligations and for quality improvement. This data, in particular the information relating to stress on components, technical events, operator errors and other malfunctions, is sent to the Manufacturer, if necessary, along with the vehicle's identification number. The Manufacturer's liability may also be engaged. The Manufacturer may also use the operating data taken from the vehicle for product recalls. This data may also be used to check the customer's warranty and any claims made under warranty.
Any malfunctions stored in the vehicle may be reset by an after-sales service company during servicing or repair work, or at your request.

ADAS Data Recorder (ADR) system

Depending on its level of equipment, your vehicle may be equipped with an ADAS Data Recorder system that continuously process pictures and driving data, and record them inside your vehicle when specific Advanced Driver Assistance Systems (ADAS) are triggered (e.g. Intelligent emergency braking assistance, interruption of a Semi-automatic lane changing, where applicable). This system aims to provide pieces of understanding for ADAS behaviour, by collecting data every time ADAS are triggered.
Concerned data is greyed low-resolution pictures of the sight in front of the vehicle and dynamic driving data (e.g. speed, acceleration, steering angle, brake pressure pedal, blinker status, accelerator pedal position), both sampled every seconds just before and just after the event. Exact mileage and timestamping of the event are also recorded. Resolution of stored pictures is too low to allow recognition of faces, to read license plates, or to interpret panels on the roadside.
All this stored information can only be extracted from your vehicle near an approved repairer workshop, via a special equipment connected by wire to the OBD port. This can be done upon a request on your side for ADAS explanation, or in the context of a legal investigation concerning your vehicle.
This system only aims to provide explanatory context of ADAS activations. Only activation of specific ADAS systems can trigger it ; this system is never directly triggered by detection of accidents or collisions without ADAS activation. In case where ADAS are deactivated, ADR system will not record any data.

Event Data Recorder (EDR) system

In addition, depending on country of sale and upon legal obligations, your vehicle may also be equipped with an Event Data Recorder system that records data in case of accident or collision, whatever the activation status of your ADAS systems. Pursuant to the Regulation (EU) 2022/545, EDR system is a legal obligation inside Europe Market, and in other countries bent to

UN Regulation No 160 ; its purpose is to freeze driving data when accidents or collisions occur.
Contrary to the ADR system above described, pictures of the scene are never recorded by EDR system. Data can only be read through OBD port via a special equipment that law enforcement agencies may use to analyze the context of an accident involving your vehicle. Except in exceptional cases, repairers do not own this equipment.

Comfort and Infotainment functions

Comfort settings and custom settings can be stored in the vehicle and changed or reset at any time.
Depending on the equipment level in question, these include

- seat and steering wheel position settings
- chassis and air conditioning settings
- custom settings such as interior lighting

You can input your own data in the Infotainment functions for your vehicle as part of the selected features.
Depending on the equipment level in question, these include

- multimedia data such as music, videos or photos for playback in an integrated multimedia system
- address book data for use with an integrated hands-free system or an integrated navigation system
- input destinations
- data on the use of online services

This data for comfort and Infotainment functions can be stored locally in the vehicle or be kept on a device that you have connected to the vehicle (e.g. a smartphone, USB stick or MP3 player). Data that you have input yourself can be deleted at any time.
This data can only be transmitted out of the vehicle at your request, particularly when using online services in accordance with the settings selected by you.

Smartphone integration (e.g. Android Auto® or Apple® CarPlay®)

accordingly, you can connect your smartphone or another mobile device to the vehicle so that you can control it via the controls integrated in the vehicle.
The smartphone image and sound can be output via the multimedia system in this case. At the same time, specific information is transmitted to your smartphone.
Depending on the type of integration, this includes data such as position data, day / night mode and other general vehicle information. For more information, please see the operating instructions for the vehicle / Infotainment system.
Integration allows selected smartphone apps to be used, such as navigation or music playback. No further integration is possible between smartphone and vehicle, in particular active access to vehicle data. The nature of further data processing is determined by the provider of the app used. Whether you can define settings, and if so which ones, is dependent on the app in question and your smartphone's operating system.

Online services - "Over-The-Air" connectivity

If your vehicle is connected to a wireless network, data can be exchanged between your vehicle and other systems.
Connection to a wireless network is made possible via a transmitter located in your vehicle or a mobile device that

you have provided (e.g. smartphone). The online services can be used via this wireless connection. These include online services and applications (apps) provided to you by the Manufacturer or other suppliers.

Proprietary services

As regards the Manufacturer's online services, the corresponding functions are described by the Manufacturer in an appropriate medium (e.g. handbook, Manufacturer's website) and the information about data protection is provided. Personal data may be used for online services. The exchange of data for this purpose takes place over a secure connection, using for example the Manufacturer's dedicated computer systems. The collection, processing and use of personal data for the development of services are carried out solely on the basis of a legal authorization, for example in the case of a legal emergency call system, or a contractual agreement or else under a consent agreement.
You can activate or deactivate the services and functions (some may be chargeable) and, in some cases, the vehicle's entire connection to the wireless network. This does not include legally required functions and services such as an emergency communication system.

Third-party services

If you use online services provided by other (third-party) suppliers, these services are subject to the responsibility, the data protection and the terms and conditions of use of the supplier in question. The Manufacturer often has no influence over the content exchanged in this regard.
Please therefore ensure that you are aware of the nature, extent and purpose of the collection and use of personal data as part of the thirdparty services provided by the service provider in question.

Online services based on contractual agreements

Your vehicle may disclose and receive data by "Over-The-Air" connectivity to perform services explicitly requested by a service subscriber. During the subscription process, we check by different means the legitimacy of the requestor considered as vehicle’s owner to activate services on the vehicle.

For more details on those services, please ask the service subscriber to provide the relative Terms and Conditions accepted. You can find them from the Brand Mobile app or the Brand website, after being connected with a Stellantis account.

Protecting measures against cyber attacks

Depending to the model, your vehicle may be equipped with a system that detects cyber attack attempts or unexpected events for cybersecurity point of view . This system, when fitted inside the vehicle, is working for the entire life cycle of the vehicle.
When cybersecurity events are detected (e.g. unexpected established connections with unknown systems, unexpected reboots, and any abn ormal system configurations), log files are generated, temporally stored inside your vehicle and then sent to the Manufacturer’s in fra structures by "Over-The-Air" connectivity. Those log files are analyzed by the Manufacturer’s Security Operational Center (SOC) to define appropriate measures protecting vehicles from malicious interactions with electronical components. Such measures

could be the deployment of software and firmware updates.
The purpose of this system is thus to enhance cybersecurity measures settled inside vehicles.
It also directly participates to the securitization of your vehicle's connectivity and allows the correct performance of online services activated on your vehicle . Ways to exercise your Privacy rights to this processing are described within the European Connected Vehicles Privacy Policy of Stellantis (see below).

Applying legal Obligations and respective requirements

This list can change according to European regulations. Please consult online this document to be sure to have the up-to-date list of applying regulations in EU. Depending of the date of the Type Approval of the vehicle, some regulations cannot apply.
Generally, these legal obligations can disclose data independtly of the in-vehicle privacy settings.

eCall - Emergency Call

This function will be provided for the entire life cycle of the VEHICLE.
This function, where operational, is provided through the Public Emergency service of each country where you are driving. It doesn't matter where you bought your vehicle or where it is registered.
In the event of a significant impact or a serious accident recorded by the DEVICE on the VEHICLE, with consequent shutdown of the VEHICLE itself, a phone-call is automatically forwarded from the VEHICLE to the respective Public Emergency number (call to '112' inside Europe), together with the transmission of the minimum data needed for identification and location of the VEHICLE (i.e. your exact location, the time of the accident, your vehicle's identification number and direction of travel). This information is only transmitted from your vehicle in the event of a serious accident ; it allows the Public Emergency Services to assess and manage your situation. The Public Emergency Services will act according to local legislation and its own operating procedures. Inside Europe, the 112-based eCall service is a public service of general interest and should therefore be accessible free of charge to all consumers.
According to Regulation (EU) 2015/758, this system is mandatory for all new types of vehicle approved for manufacture after 31 March 2018.
The eCall system is only activated if your vehicle is involved in a serious accident. The rest of the time the system remains inactive. This means that when you are simply driving your vehicle, no permanent tracking (registering your car's position or monitoring your driving) or transmission of data takes place on behalf of this regulatory service.

OBFCM - On-Board Fuel Consumption Meter

This SERVICE is provided for 15 years after the vehicule is fisrtly put into circulation.
In accordance to Article 9 of Implementing Regulation (EU) 2021/392 ("OBFCM"), this regulatory service allows the European Environment Agency (EEA) to collect vehicle data related to usage (such as VIN, total distance travelled, total fuel consumed, total grid energy into battery when applicable).
These data are used by EEA to monitor in real usage the fuel and energy consumption and the CO_2 emission of the

new vehicles, in an anonymized and aggregated way.
As mentioned in OBFCM regulation, the CUSTOMER can refuse the collection and transmission of vehicle's data for regulatory OBFCM purpose. This can be done by contacting Customer Care Center (contact information available on the brand website available for your country).

SLI - Speed Limit Information

This function will be provided for the entire life cycle of the VEHICLE, only for vehicles sold inside the Europe Market.
Pursuant to the Regulation (EU) 2018/858 on the approval and market surveillance of motor vehicles and their trailers, and of systems, components and separate technical units intended for such vehicles dated 30 May 2018, as amended by the Regulation (EU) 2019/2144 dated 27 November 2019 and the Commission Delegated Regulation (EU) 2021/1958 dated 23 June 2021 (together the "GSR V2 Regulations"), car manufacturers are required to equip new vehicles sold in Europe with various systems aiming at guaranteeing the overall safety of such vehicles.
As per Article 6 of the Regulation (EU) 2019/2144, such systems must include an "intelligent speed assistance" system (hereinafter "ISA") that provides the applicable speed limit to the driver for at least 90% of the total distance and for at least 80% of the distance driven on each of the three road types (urban roads and streets, non-urban roads, and motorways/expressways/dual carriageways).
SLI function provides the driver with the applicable speed limit on the road where driver travels. SLI function aims to improve the safety by allowing the vehicle to display in real time applicable speed limit, even when external conditions doesn't not permit it (e.g. weather, sign hidden by another vehicle). The applicable speed limit is retrieved from the front camera of the vehicle and maybe completed through Over-The-Air communication system to improve the reliability of information according to the vehicle definition. To get valid speed limit information, the vehicle's current position is sent via the telematics unit and is immediately deleted after processing. Tracking of the vehicle position is not possible at any time. This is not impacted by the privacy settings of the vehicle.
As required by the "GSR V2 Regulations", this SLI feature is activated by default at key on, but can be partially deactivated at every time by the user of the vehicle, given that the driver may cut the audible warning function from the vehicle's settings available from the central touch screen. This will not impact the visual warning function that will stay active and may still require Over-The-Air data transmission of current vehicle's position for accurate speed limit detection. Depending on the model of your vehicle, it may be possible to also fully cut the SLI function (i.e. to stop speed limit detection and speed limit warning function) from the central touch screen, and thus cut the data transmission for the current trip.

Mileage disclosure to Car-Pass association

(Only for vehicles registered in Belgium)
This disclosure is active in Belgium only, as an answer to a Belgium law in order to prevent vehicle mileage fraud (Belgium law of 28th november 2018, applicable from 01/01/2020). It is provided lifetime, as long as Car-Pass association requests the data.

It consists in providing 4 times a year the mileage of any vehicle registered in Belgium to Car-Pass, an association delegated by belgian authorities to collect and control this data.
This mileage is collected over-the-air by Stellantis if another connected service already uses it. This data is transmitted to Car-Pass association, upon request of this organism.
For more information, please refer to the Car-Pass privacy policy (https://www.car-pass.be/en/privacy-policy).

Data Use - Product Quality Improvement

You acknowledge and agree that to improve the quality of the products produced by STELLANTIS AUTO SAS as a car maker, your Vehicle Data (as defined in the Stellantis Privacy Policy for connected services, see below) – excluding the geolocation of the vehicle – are transferred to the car maker for the purpose of anomalies avoidance, aggregated data analysis for product improvement or creation of new products.
Further information on this, and ways to exercise your Privacy rights to this processing, are described in the Stellantis Privacy Policy for connected services (see below).

European Connected Vehicles Privacy Policy of Stellantis

The Privacy Policy for Connected Vehicles ("Privacy Policy") applies to the Personal Data we process about users of the connected services through our Vehicle, our Websites or Application who have signed the General Conditions as a Customer or who are authorized by a Customer to access and use the connected services.
This Privacy Policy is drafted pursuant Article 13 of the EU Regulation 679/2016 and will help you understand better how we handle your information. In this document, you will find some examples of how we process Personal Data, and Definitions referring to more detailed explanations (at the end this Privacy Policy). If you would like any clarifications regarding this Privacy Policy or how your data are processed, please send your request to: dataprotectionofficer@stellantis.com This document is available on brand websites, in the section dedicated to connected services.

It is also available at the following link: https://connected-vehicles-privacy.stellantis.com/

In case of an accident

This vehicle is fitted with an event data recorder. This system gathers and records certain vehicle data over a short period (a few seconds) before, during and after an event such as an accident or collision. In order to gain a better understanding of the circumstances surrounding the event, the system records how the vehicle’s various systems are operating at the time of the event, including:

- any deployment of a restraint system (airbag, seat belt, etc)
- the status of all seat belts (fastened / unfastened)
- the contact or intensity of pressure exerted on the pedal(s) engaged by the driver
- the speed of the vehicle
- the status of some driving and driver assistance systems.

The following are not recorded:

- data on normal driving conditions, in other words data not directly related to the event
- personal data on the driver and any other occupants
- the geographical location of the vehicle at the time of the event.

The reading of data recorded by the event data recorder requires both:

- access to the interior of the vehicle or to the event data recorder
- special equipment that can be purchased from the manufacturer Bosch.
- Aside from the vehicle manufacturer, other parties such as law enforcement agencies may access this data in order to analyse the event.

Event Data Recorders

(Depending on country of sale)
This vehicle is fitted with an accident data recording system, also called Event Data Recorder (EDR).
This system gathers and records certain vehicle data over a short period (a few seconds) before, during and after an event such as an accident or collision.

In order to gain a better understanding of the circumstances surrounding the event, this system records how the vehicle's various systems are operating at the time of the event, including:

- Any deployment of a restraint system (e.g. airbag, seat belt).
- The status of the seat belts of all the occupants (fastened/unfastened).
- The contact or intensity of pressure exerted on the pedal(s) engaged by the driver.
- The speed of the vehicle.
- The status of some driving and manoeuvring aids systems.

The following are not recorded by the system:

- Data on normal driving conditions, in other words data not directly related to the event.
- Personal data on the driver and any other occupants.
- The geographical location of the vehicle at the time of the event.

The reading of data recorded by the system requires the following:

- Access to the interior of the vehicle or to the system.

And

- Special equipment that can be purchased from the manufacturer BOSCH (www.BoschCDRTool.com).

Aside from the vehicle Manufacturer, other parties such as law enforcement agencies may access this data in order to analyse the event.
Reactivate the system as soon as the level of grip permits.

Radio Frequency Identification (RFID)

RFID technology is used in some vehicles for functions such as immobilizer. It is also used in connection with conveniences such as radio remote controls for door locking / unlocking and starting. RFID technology in Opel vehicles does not use or record personal information or link with any other Opel system containing personal information.

INDEX

Numerics

12V Power Outlets 91

A

AC On-Off Control 120
Access to engine compartment . . 238
Active Emergency Braking (AEB) . 187
Adaptive cruise control (ACC) . . . 182
ADAS Data Recorder
(ADR) system 293
AdBlue tank 283
AdBlue® 236
Adding Coolant Fluid 241
Adding Washer Fluid 241
Advanced Driving
Assistance Systems (ADAS) . . 1, 178
Air Conditioner Maintenance 247
Air intake 247
Air vents 126
Airbag System 44
Airbag System Malfunction 47
Airbag,child restraint 49
Allowed tire and rim sizes 259
Anti-lock Brake System
(ABS) / Electronic Brake
Force Distribution (EBFD) 192
Anti-Slip Regulator (ASR) 190
Anti-theft Alarm System 16
Anti-theft Locking System 16
Antifreeze coolant 238
Assist And SOS 214
Assistance Call 216
Audio Settings 138
Automatic AC control 122
Automatic Emergency Call 216
Automatic Headlights Dipping 86
Automatic light control 82
Automatic Lighting 82
Automatic locking 14
Automatic Park Assist 199
Automatic transmission 152

B

Battery Charging Operation 161
Blinds 28
Blue warning and indicator lights . 119
Bodywork-Exterior Care 262
Brake and clutch fluids 238
Brake Assist (BA) 190
Brakes 149
Bulb Replacement 249

C

Catalytic converter 158
Central Locking System 10
Centre high-mounted brake
light (replacement) 256
Charging 161, 165
Charging cables 163
Charging types 162
Checking Brake Fluid 243
Checking Fluids Level 233
Checking Oil Level 239
Child restraint 49
Child restraint installation
locations 55
Child Seats Recommended 54
Choosing The Media 137
Choosing The Radio Frequency . . 137
Climate Controls 120
Comfort consumption gauge 105
Compartment Filter 248
Compatibility of Wheels And
Tires 284
Connection 168
Connectivity 142
Control indicators 107
Corner Lights 86
Courtesy Lights 87
Cruise control 180
Cupholders 89
Curtain Airbags 46
Customer Information 1, 286
Customization 135

D

Daytime running light and parking light 251
Daytime running lights 85
Declaration of Conformity 286
Demisting and defrosting the windows 121
Diesel Filter 248
Diesel Fuelling 158
Dimensions 269
Disconnecting / Connecting Battery 228
Disconnection 169
Display 130
Disposal Prescriptions 289
Doors 18
Drive Belt Inspection 248
Drive Selector (BEV) 153
Driver Drowsiness Detection (DDD) 206
Driving Mode Selector 156
Driving Modes 156

E

Easy Entry 37
Electric motor 278
Electronic Key System 10
Electronic Stability Control (ESC) and Traction Control system (TC) 191
Emergency Call (eCall) 214
Emergency Call Data Recording and Privacy 291
Emergency Signals 85
End-Of-Life Vehicle Disposal 232
Engine 239
Engine Air Filter 247
Engine Compartment 238
Engine coolant 235
Engine coolant temperature gauge 106
Engine Data 277
Engine exhaust 157
Engine Identification 268
Engine oil 235, 283
Engine Oil Filter 247
Engine oil level monitor 106
Engine Washing 245
Event Data Recorders 299
Exhaust filter 158
Exit lighting 86
Exterior Lights 81
External devices 140

F

Fixed air vents 127
Fluid Capacities 283
Fluids and lubricants 281
Folding Front Seats 37
Folding Mirrors 28
Front Airbags 45
Front Armrest 38
Front fog lights 252
Front Fog lights 85
Front Passenger Airbag Deactivation 47
Front Seat Position 33
Front storage 90
Front turn lights 253
Fuel 158
Fuel consumption and CO_2 Emissions 289
Fuel level gauge 104
Fuel tank 283
Fuses 249

G

Glove Compartment 89
Green warning and indicator lights 119

H

Halogen headlights 249
Hazard Warning Lights 214
Head Restraints 33
Head Restraints Position 33
Headlight flash 84
Headlight height adjustment 83
Heated Mirrors 29
Heated Seats 36
Heating and ventilation system . . 121
High beam 84, 250
High voltage system 170
High-voltage battery charge status 104

Hill Descent Control (HDC) 208
Hill Start Assist (HSA) 209
Horn 79
How To Use This Manual 6

I

i-Size child restraint system 53
Ignition Switch 79
Immobilizer 18
In Case Of Emergency 1, 214
Info Display 131
Inside Rear view Mirror 29
Instrument cluster 130
Instrument Cluster 102
Instrument Panel 99
Interior Ambient Lights 88
Interior Care 264
Interior lights 258
Interior Lights 87
Interior Storage / Interior Features . 88
Introduction To
Maintenance And Vehicle Care . . 232
Isofix Anchorage Connectors 52

J

Jacking positions 260
Jacking the Vehicle and
Wheel Changing 217
Jump Starting 224

K

Key with foldaway key section 10
Keys 9

L

Lane Departure Warning (LDW) . . 197
Lane Keeping Assist (LKA) 195
Lateral Airbags 46
LED headlights 251
License Plate 267
Lighting Controls 82
Link to Company App and Website . . 5
Load compartment 93
Load compartment lighting 88
Load Reduction Mode 172
Low beam 250

M

Maintenance And Vehicle
Care 1, 232
Manual Front Seats 34
Manual transmission 152
Massage Seats 36
Maximum AC On-Off Control 120
Memorizing A Radio Station 138
Menu 133
Mirrors 28
Multimedia System 140

N

Navigation 141
Navigation System / Multimedia . . 131
Number plate light (replacement) . 257

O

Odometer 102
Orange warning and
indicator lights 112

P

Parking Brake 149
Passenger Side Camera 194
Periodic Checks 233
Phone 138, 143
Power Button 79
Power flow 105
Power Front Seats 35
Power Outside Mirrors 28
Power Windows 24
Profiles 134
Programmable charging 167
Propulsion Type 6

R

Radio 137
Radio (Infotainment system) 131
Radio Frequency
Identification (RFID) 299
Radio Remote Control Function . . . 9
Rain sensing wiper control 80
REACH 290
Reading lights 87
Rear Doors Child Locks 18
Rear Fog lights 85
Rear Seat Position 38
Rear Vision Camera (RVC) 204

Rear Window 25
Rear window wiper and washer . . . 81
Recirculation control 121
Recommended Fluids, Lubricants, and Parts 235
Red warning and indicator lights . 110
Refill AdBlue® (Exhaust Emission Fluid) 246
Refuelling 159
Regenerative braking 152
Registered trademarks 290
Replacement keys 16
Replacing battery in radio remote control 14
Reverse lights 85
Roof Bars 171

S

Safety Belts 41
Safety Messages 6
Scheduled Servicing 233
Screen Mirroring 143
Screen operation 136
Seat Belt Pretensioner 44
Seat Belts Introduction 41
Seat belts maintenance 264
Seatback Storage 90
Seats 33
Selecting A Radio Station 137
Service display 106
Service Information 233
Side Blind Spot Alert (SBSA) 192
Side turn lights (replacement) . . . 256
Sliding Door Operation 19
Speed limiter 178
Speedometer 102
Starting And Stopping The Engine 145
Starting Another Vehicle 226
Starting Using Another Vehicle Battery 225
Steering Wheel 77
Steering Wheel Adjustment 77
Steering Wheel Controls 77, 141
Steering Wheel Heating 78
Steering Wheel Lock 77
Steering Wheel Shift Paddles 78
Stop & start system 147
Sun Visors 27
Sunroof 88
Sunvisor lights 88
Surround Vision 202
Symbols Keys 6

T

Tachometer 103
Tail light assembly 253
Tailgate Operation 22
Temperature Control 125
Tightening Torques 284
Tire Chains 259
Tire Information Label 268
Tire Pressure Monitoring System (TPMS) 212
Tire Pressures 284
Tire Repair Kit 220
Tire Repair Procedure 221
Tire Repair Toolkit 220
Tire Safety Information 258
Tires and Wheels 258
Towing 229
Towing another vehicle 231
Towing equipment 174
Towing The Vehicle 229
Traction modes 157
Traffic Sign Assist (TSA) 210
Trailer Towing 173
Transmission 152
Tread depth 258
Trip computer 105
Trip odometer 103
Turn Signals 84

U

Updating The System 134
USB Ports 92

V

Vehicle Data 269
Vehicle Data Recording and Privacy 290
Vehicle Identification Number (VIN) 267
Vehicle Loading 171
Vehicle Maintenance 245
Vehicle Security System 16

Vehicle Storage 260
Voice Commands 141

W

Warning And Control
Indicator Lights 107
Warning triangle 217
Washer fluid 236
Welcome Lighting 86
Wheel Changing 260
Wheel Changing Toolkit 217
Wheel Covers 259
Wheel Removal / Installation 219
Widgets 107
Windows 24
Windshield 27
Windshield wiper and washer 79
Winter tires 258
Wiper Blade Replacement 245
Wipers and Washers 79
Wireless Phone Charger 92

Driving innovation for tomorrow.

For over 50 years, **TotalEnergies and Stellantis have shared a common vision of performance, innovation, and mobility for the future.**

This long-standing partnership is built on close technical collaboration, from product design to after-sales service across official networks. By combining their expertise, the two companies have developed cutting-edge lubrication technologies tailored to the evolving needs of Opel powertrains.

The co-branded **Quartz Mopar** and **Quartz EV3R Mopar** ranges reflect this shared expertise. Specifically designed and **approved by Opel**, they include **high-performance engine oils** covering every Opel powertrain. Each formulation helps keep engines clean, reduce wear, and support fuel efficiency, ensuring smooth operation mile after mile, even under the most demanding conditions.

We're taking innovation further with **Quartz EV3R Mopar,** which introduces the **3R approach (Reduce, Reuse, Regenerate)** using regenerated base oils and a recyclable bottle, while delivering the same performance as standard Quartz oils, with a lower impact compared to our conventional products.

Your authorized Opel repairer will recommend the right oil for your model and service schedule. Available and **recommended within Opel authorized after-sales networks,** Quartz Mopar offers confidence, durability, and proven technology backed by decades of partnership.

OPEL | TotalEnergies

OFFICIAL PARTNERS

OPEL recommends TotalEnergies

www.opel.com

Copyright by Opel Automobile GmbH, Rüsselsheim, Germany.

The information contained in this publication is effective as of the date indicated below. Opel Automobile GmbH reserves the right to make changes to the technical specifications, features and design of the vehicles relative to the information in this publication as well as changes to the publication itself.

Edition: June 2026, Opel Automobile GmbH, Rüsselsheim.
Printed on chlorine-free bleached paper.

OVIVACO2606en-1